PERPETUAL TROUBLE SHOOTER'S MANUAL

JOHN F. RIDER

Rider's Perpetual Trouble Shooter's Manual

Volume 9

©John F. Rider, Publisher

MODEL "6E"

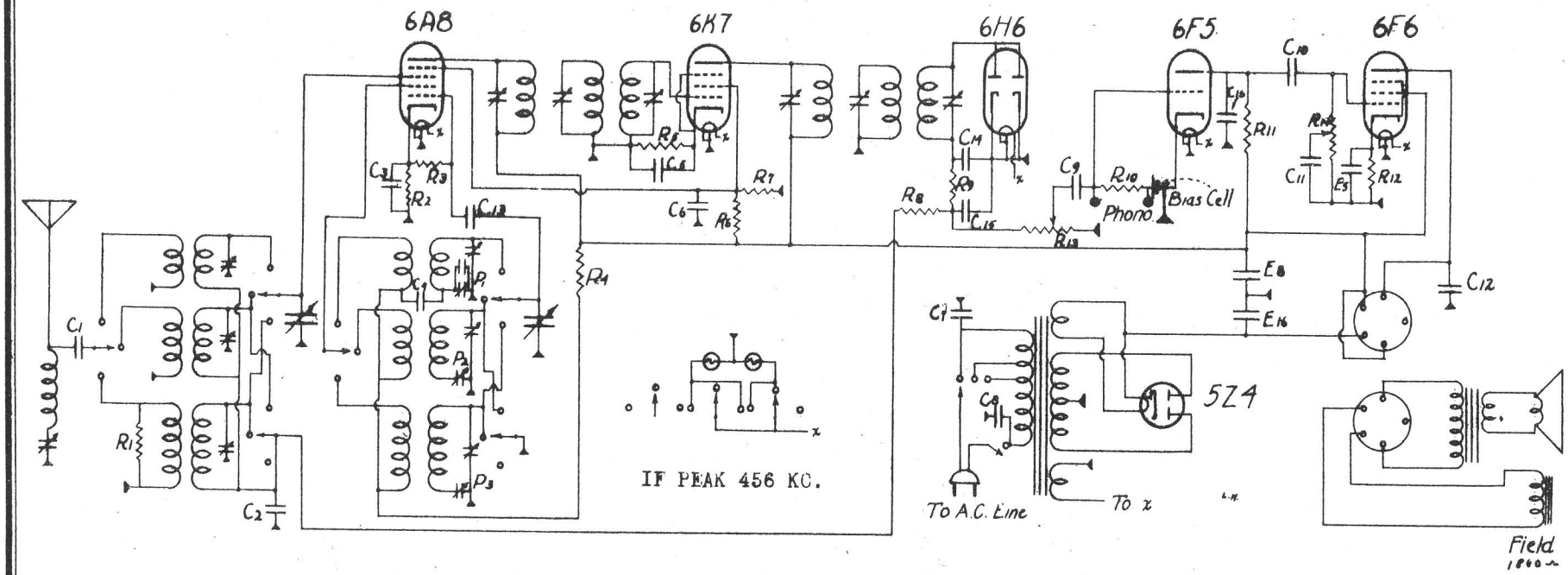

R 1 -	15,000	ohms -	1/4 w.
R 2 -	300	" -	"
R 3 -	50,000	" -	"
R 4 -	20,000	" -	1/2 w.
R 5 -	400	" -	1/4 w.
R 6 -	25,000	" -	2 w.
R 7 -	40,000	" -	1/2 w.
R 8 -	1,000,000	" -	1/4 w.
R 9 -	60,000	" -	"
R 10 -	1,000,000	" -	"
R 11 -	500,000	" -	"
R 12 -	400	" -	1 w.
R 13 -	500,000	" -	vol. cont.
R 14 -	500,000	" -	tone cont.

C 1 -	.005	-	600 v.
C 2 -	.05	-	400 v.
C 3 -	.1	-	200 v.
C 4 -	.02	-	400 v.
C 5 -	.1	-	200 v.
C 6 -	.1	-	200 v.
C 7 -	.05	-	400 v.
C 8 -	.05	-	400 v.
C 9 -	.02	-	400 v.
C 10 -	.02	-	400 v.
C 11 -	.005	-	600 v.
C 12 -	.005	-	600 v.
C 13 -	.000085	-	mica
C 14 -	.0001	-	mica
C 15 -	.0001	-	mica
C 16 -	.0001	-	mica

P 1 -	.0027	max.
P 2 -	.0005	max.
P 3 -	.00015	max.

E 5 -	5 mfd.	-	35 v.
E 8 -	8 mfd.	-	400 v.
E 16 -	16 mfd.	-	450 v.

6T AC 3 BAND SUPERHETERODYNE RECEIVER

ANTENNA AND GROUND CONNECTIONS. An antenna from 50 to 100 feet long is recommended. A good ground wire is absolutely essential on this receiver.

POWER SUPPLY. This receiver is designed to operate from the 115-135 or 220 A.C. 50 cycle lines. The voltage change is accomplished by removing the cover from the power transformer and connecting the flexible lead to the desired voltage terminal.

LOCATION OF CONTROLS. The knob on the lower right is the on-off switch and the tone control. The knob on the lower left is the volume control and the knob directly below the selector knob is the wave change switch.

OPERATION. Turn station selector knob to secure desired stations. When tuning in a set, set tuning control carefully to maximum station volume, then adjust volume to desired level with volume control knob.

AIR KING PRODUCTS CORP.

MODEL 6E
Schematic
Data

MODELS 76,501,503,505
Schematic

AIR-KING PRODUCTS CORP.

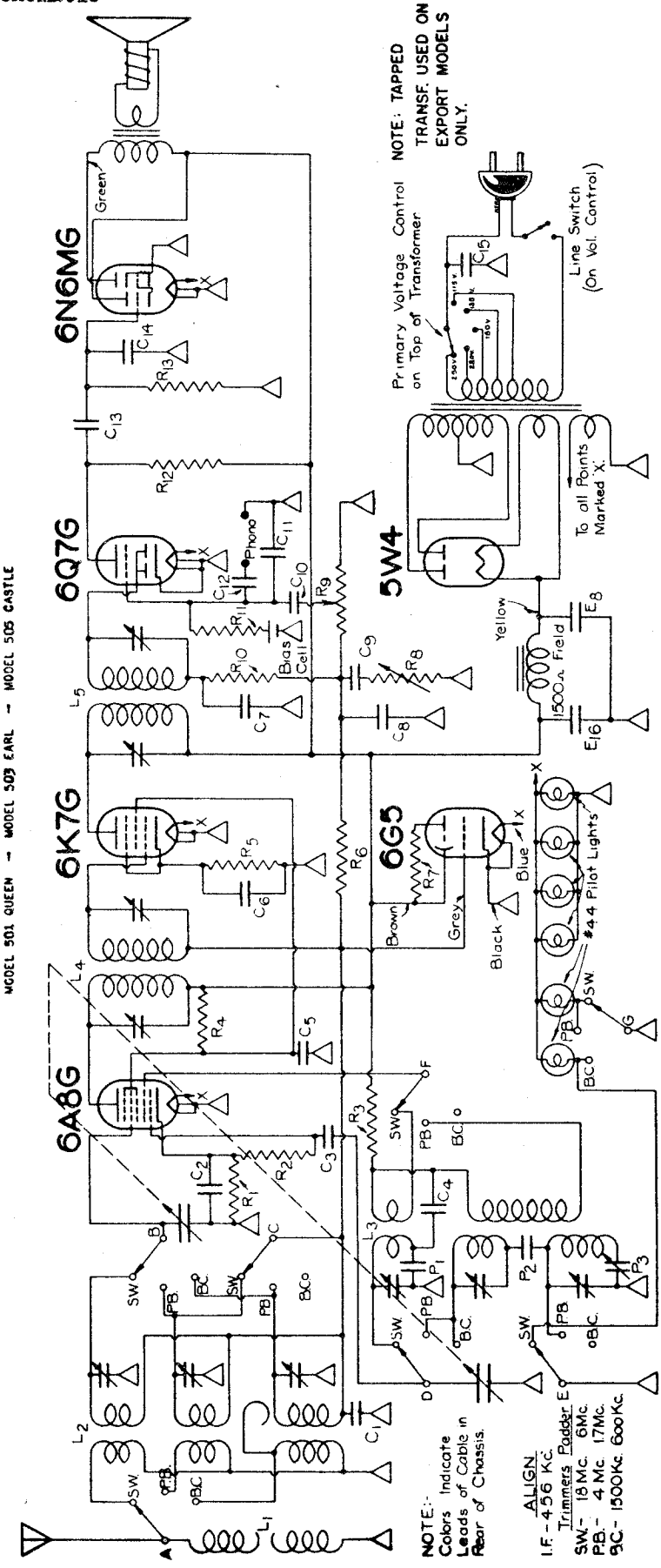

MODEL 76

C1 - .05 - 400 V.
C2 - .1 - 200 V.
C3 - .0001 - mica
C4 - .02 - 400 V.
C5 - .1 - 200 V.
C6 - .1 - 200 V.
C7 - .0001 - mica
C8 - .0001 - mica
C9 - .005 - 400 V.
C10 - .02 - 400 V.
C11 - .0001 - mica
C12 - .1 - 200 V.
C13 - .02 - 400 V.
C14 - .0005 - mica
C15 - .02 - 400 V.

L1 - 456 KC wave trap
L2 - 3 band antenna coil
L3 - 3 band oscillator coil
L4 - 456 KC Input I. F.
L5 - 456 KC Output I. F.

P1 - .0048 mfd.
P2 - 3800 mmf.

P3 - 600 mmf. max.

E8 - 8 mfd. - 450 V.
E16 - 16 mfd. - 300 V.

R1 - 250 ohm ½ watt
R2 - 50,000 " ½ "
R3 - 20,000 " ½ "
R4 - 25,000 " 2 "
R5 - 500 " ½ "
R6 - 3,000,000 " ½ "
R7 - 1,000,000 " ½ "
R8 - 400,000 " Tone Control
R9 - 450,000 " Vol. Control
R10 - 50,000 " ½ Watt
R11 - 1,000,000 " ½ "
R12 - 300,000 " ½ "
R13 - 500,000 " ½ "

Switches A,B,C,D,E,F,G - Two deck; outside deck, 5 section 1 to 5 position each section - inside deck, 4 section 1 to 3 position each section.

©John F. Rider, Publisher

AIR KING PRODUCTS CORP.

MODEL 9E
Schematic
MODEL 252
Schematic, Socket

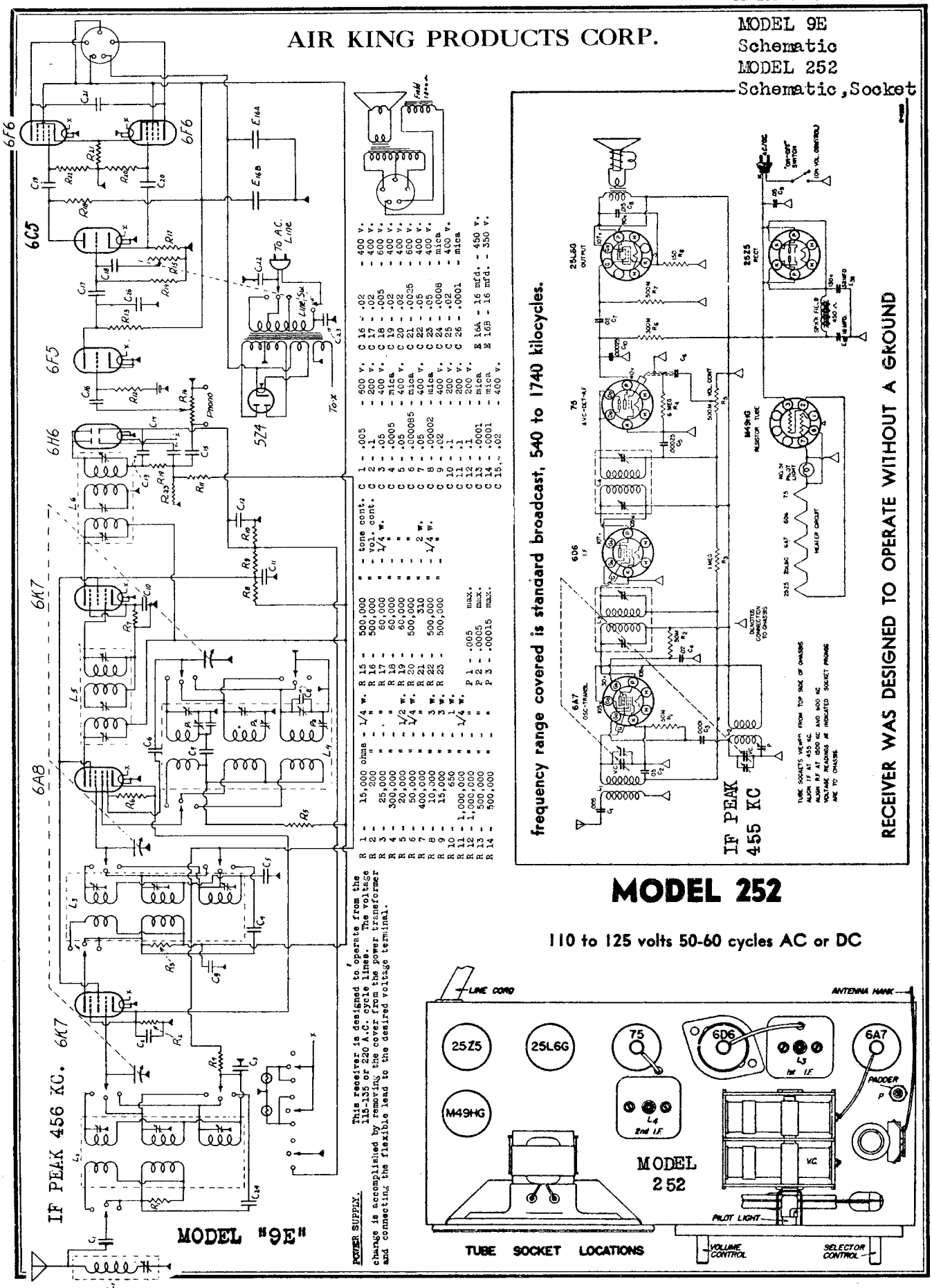

©John F. Rider, Publisher

MODEL 222
Schematic, Socket
MODEL 250-B
Schematic

AIR-KING PRODUCTS CORP.

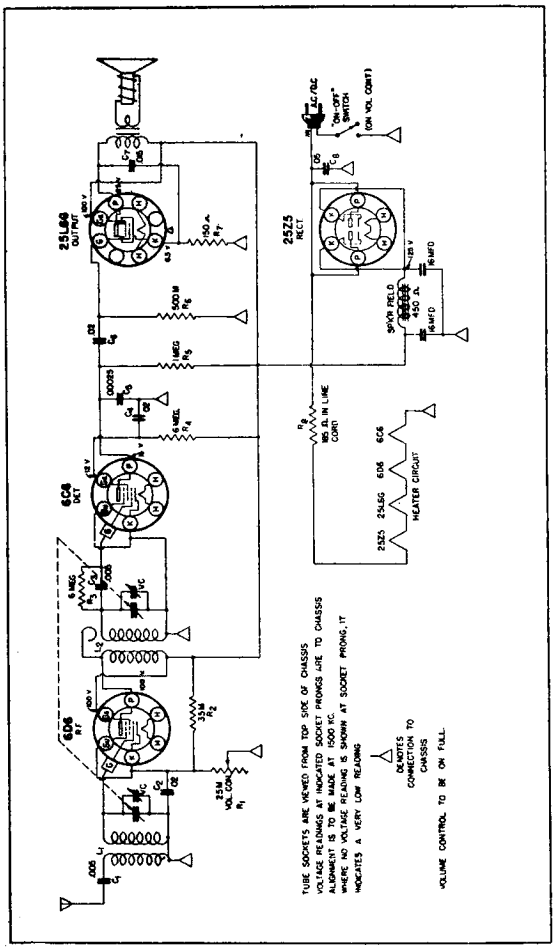

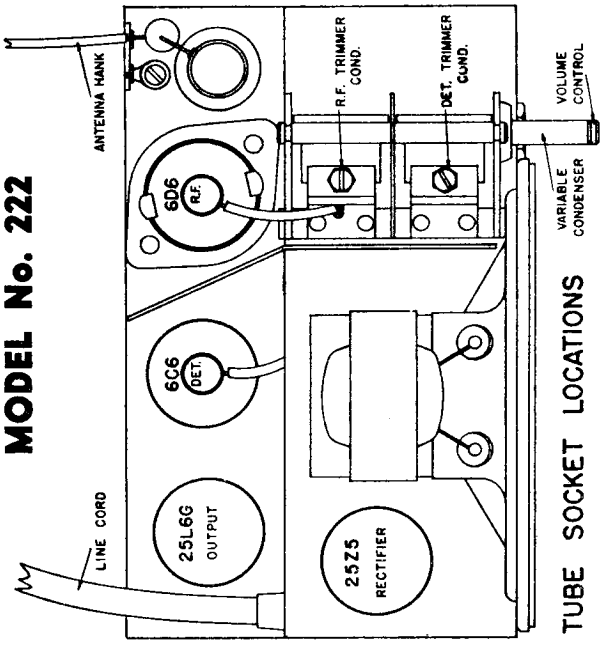

Do not connect ground wire to chassis.

The frequency range covered is 550-1700 kilocycles.

105-125 volts, 50-60 cycles, a.c. or d.c. power

MODEL 250-B

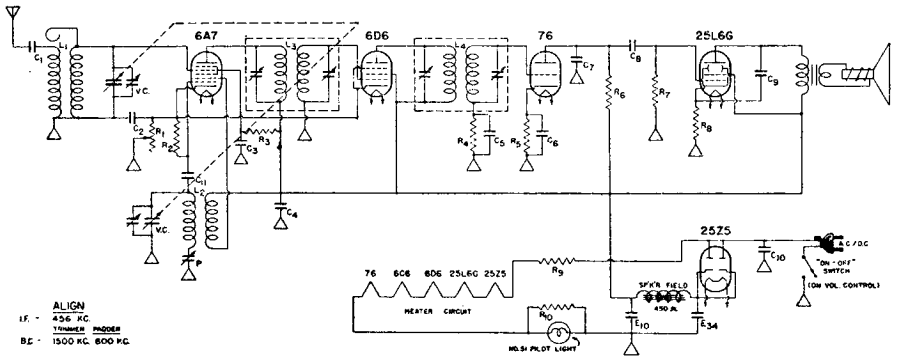

R_1 -	7,500	OHM	VOL. CONTROL
R_2 -	50,000	"	1/4 WATT
R_3 -	35,000	"	" "
R_4 -	6,000,000	"	" "
R_5 -	200,000	"	" "
R_6 -	1,000,000	"	" "
R_7 -	300,000	"	" "
R_8 -	150	"	1 "
R_9 -	143	"	IN LINE CORD
R_{10} -	31	"	3 WATT

L_1 - ANTENNA COIL
L_2 - OSCILLATOR COIL
L_3 - 456 KC. INPUT I.F.
L_4 - 456 KC. OUTPUT I.F.

P - 700 MMF. MAX PADDER

E_{10} - 10 MFD 150 V.W.
E_{34} - 34 " " "

VC - 410 MMF MAX. VARIABLE COND

C_1 -	.005	-	600 V.
C_2 -	.1	-	200 V.
C_3 -	.05	-	"
C_4 -	.05	-	"
C_5 -	.005	-	600 V.
C_6 -	.1	-	200 V.
C_7 -	.0005	-	MICA
C_8 -	.05	-	200 V.
C_9 -	.01	-	400 V.
C_{10} -	.05	-	"
C_{11} -	.0001	-	MICA

105-125 volts, 50-60 cycles AC or DC

The frequency range covered is 540-1750 kilocycles.

CAUTION - Do Not Connect Ground Wire to Chassis.

©John F. Rider, Publisher

AIR KING PRODUCTS CORP.

MODELS 688,886
MODEL 699
Schematics

MODELS 688, 886

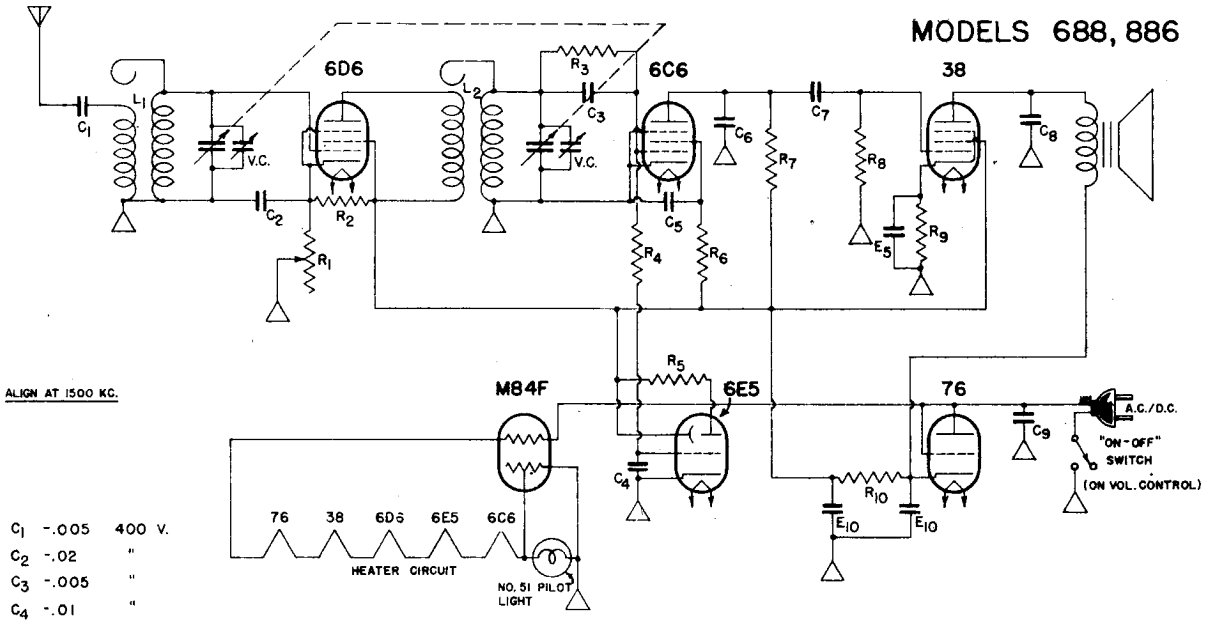

C_1	-.005	400 V.	R_1 -	25,000	OHM	VOL. CONTROL	R_6 -	6,000,000	OHM	1/4 WATT	L_1 - COMB. ANTENNA COIL
C_2	-.02	"	R_2 -	35,000	"	1/4 WATT	R_7 -	1,000,000	"	" "	L_2 COMB. R.F. COIL
C_3	-.005	"	R_3 -	3,000,000	"	" "	R_8 -	750,000	"	" "	
C_4	-.01	"	R_4 -	6,000,000	"	" "	R_9 -	1,000	"	" "	E_5 - 5 MFD. 25 W.V.
C_5	-.02	"	R_5 -	1,000,000	"	" "	R_{10} -	2,700	"	" "	E_{10} 10 " 150 "
C_6	-.00025	MICA									
C_7	-.02	400 V.									
C_8	-.005	"									
C_9	-.05	"									

MODEL 699

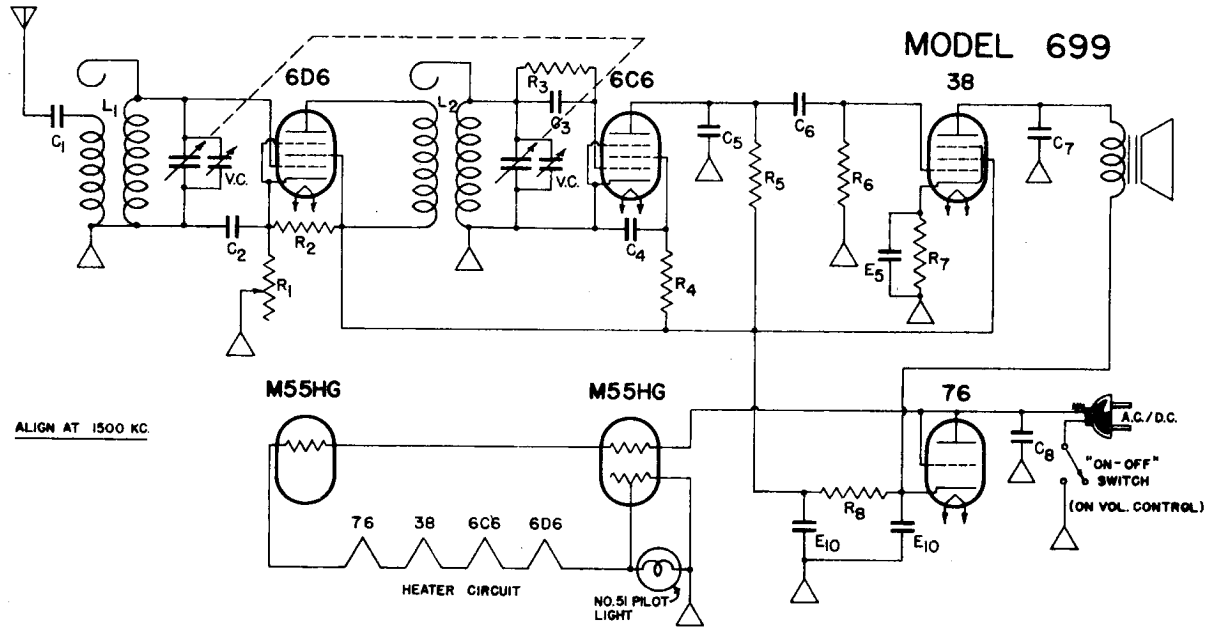

R_1 -	25,000	OHM	VOLUME CONTROL	L_1 -	ANTENNA COIL	C_1 -	.005	-	600 V.
R_2 -	35,000	"	1/4 WATT	L_2 -	R.F. COIL	C_2 -	.02	-	400 V.
R_3 -	3,000,000	"	" "			C_3 -	.005	-	600 V.
R_4 -	6,000,000	"	" "	E_5 -	5 MFD. 150 V.W.	C_4 -	.02	-	400 V.
R_5 -	1,000,000	"	" "	E_{10} -	10 " " "	C_5 -	.0001	-	MICA
R_6 -	750,000	"	" "			C_6 -	.02	-	400 V.
R_7 -	1,000	"	" "	V.C. -	410 MMF. MAX. VARIABLE COND.	C_7 -	.005	-	600 V.
R_8 -	2,700	"	" "			C_8 -	.05	-	400 V.

©John F. Rider, Publisher

MODEL 700LW
MODEL 704
Schematics

AIR KING PRODUCTS CORP.

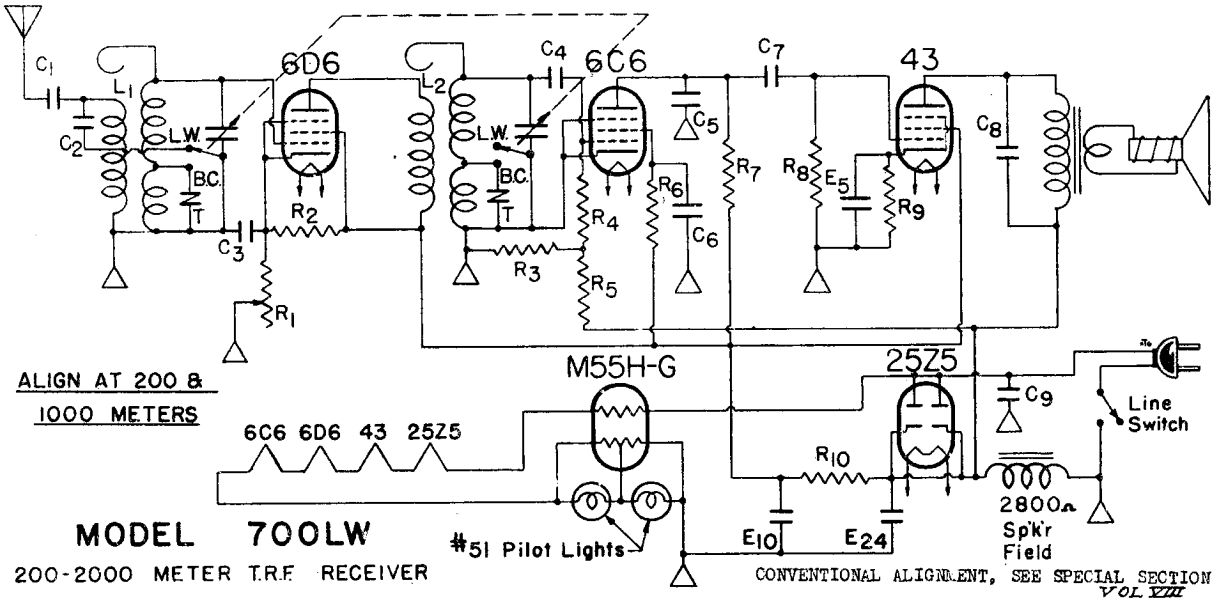

MODEL 700LW

200-2000 METER T.R.F. RECEIVER

R_1	25,000	ohm	vol. control	
R_2	35,000	"	1/4	watt
R_3	2,700	"	"	"
R_4	6,000,000	"	"	"
R_5	1,000,000	"	"	"
R_6	6,000,000	"	"	"
R_7	1,000,000	"	"	"
R_8	500,000	"	"	"
R_9	650	"	1/2	"
R_{10}	4,500	"	"	"

C_1	.005	400 v.
C_2	.00345	mica
C_3	.02	200 v.
C_4	.005	400 v.
C_5	.00025	mica
C_6	.02	200 v.
C_7	.02	200 v.
C_8	.005	400 v.
C_9	.1	400 v.

L_1 - Comb. Antenna Coil
L_2 - Comb. R.F. Coil

E_{24} - 24 mfd. 150 v.
E_{10} - 10 " "
E_5 - 5 " 25 v.

T - 3-35 mmf. Trimmer

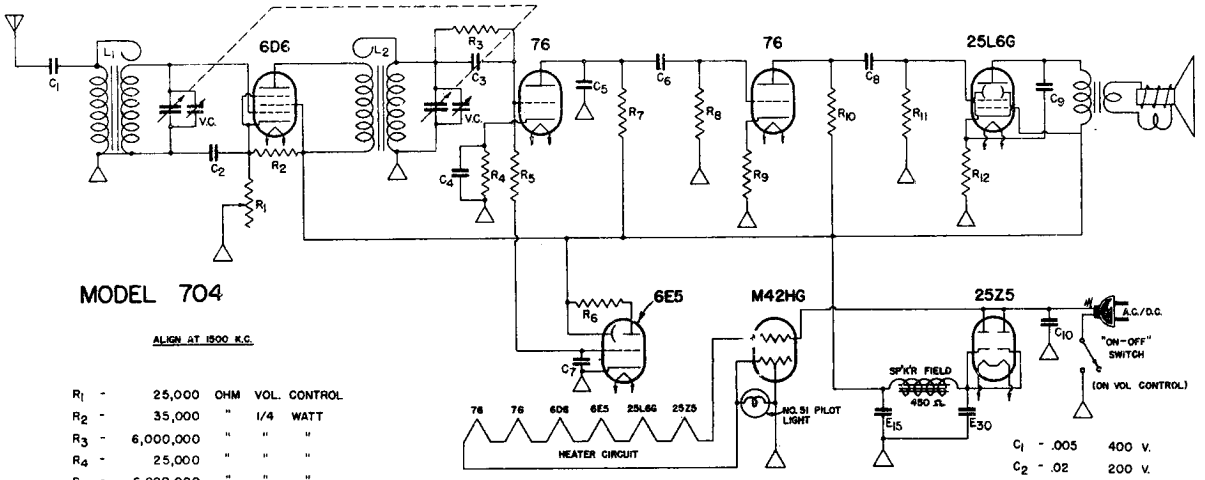

MODEL 704

ALIGN AT 1500 K.C.

R_1	25,000	OHM	VOL. CONTROL	
R_2	35,000	"	1/4	WATT
R_3	6,000,000	"	"	"
R_4	25,000	"	"	"
R_5	6,000,000	"	"	"
R_6	1,000,000	"	"	"
R_7	1,000,000	"	"	"
R_8	750,000	"	"	"
R_9	7,500	"	"	"
R_{10}	100,000	"	"	"
R_{11}	500,000	"	"	"
R_{12}	150	"	1/2	"

E_{15} - 15 MFD. 150 V.W.
E_{30} - 30 " " "

V.C. - 410 MMF. VARIABLE COND.

L_1 - IRON CORE ANTENNA COIL
L_2 - " " R.F. COIL

C_1	.005	400 V.
C_2	.02	200 V.
C_3	.005	400 V.
C_4	.1	200 V.
C_5	.00025	MICA
C_6	.02	200 V.
C_7	.01	400 V.
C_8	.02	200 V.
C_9	.01	400 V.
C_{10}	.1	"

©John F. Rider, Publisher

AIR KING PRODUCTS CORP.

MODELS 701,702,703
MODEL 725
Schematics

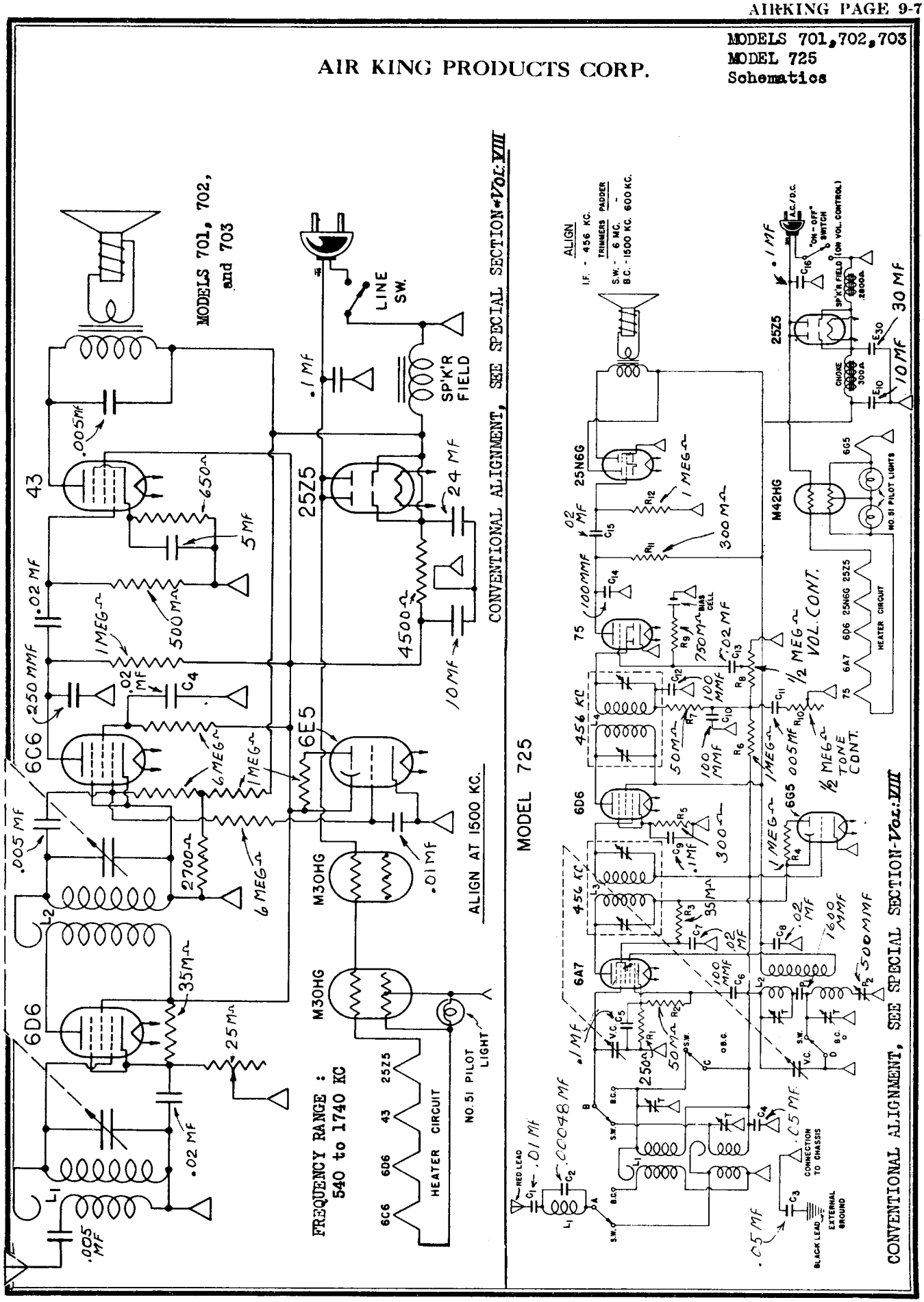

©John F. Rider, Publisher

© John F. Rider, Publisher

MODELS 720,721,770,771
870,871
Schematic, Alignment

AIR-KING PRODUCTS CORP.

MODEL X825
Schematic, Alignment

MODEL X825

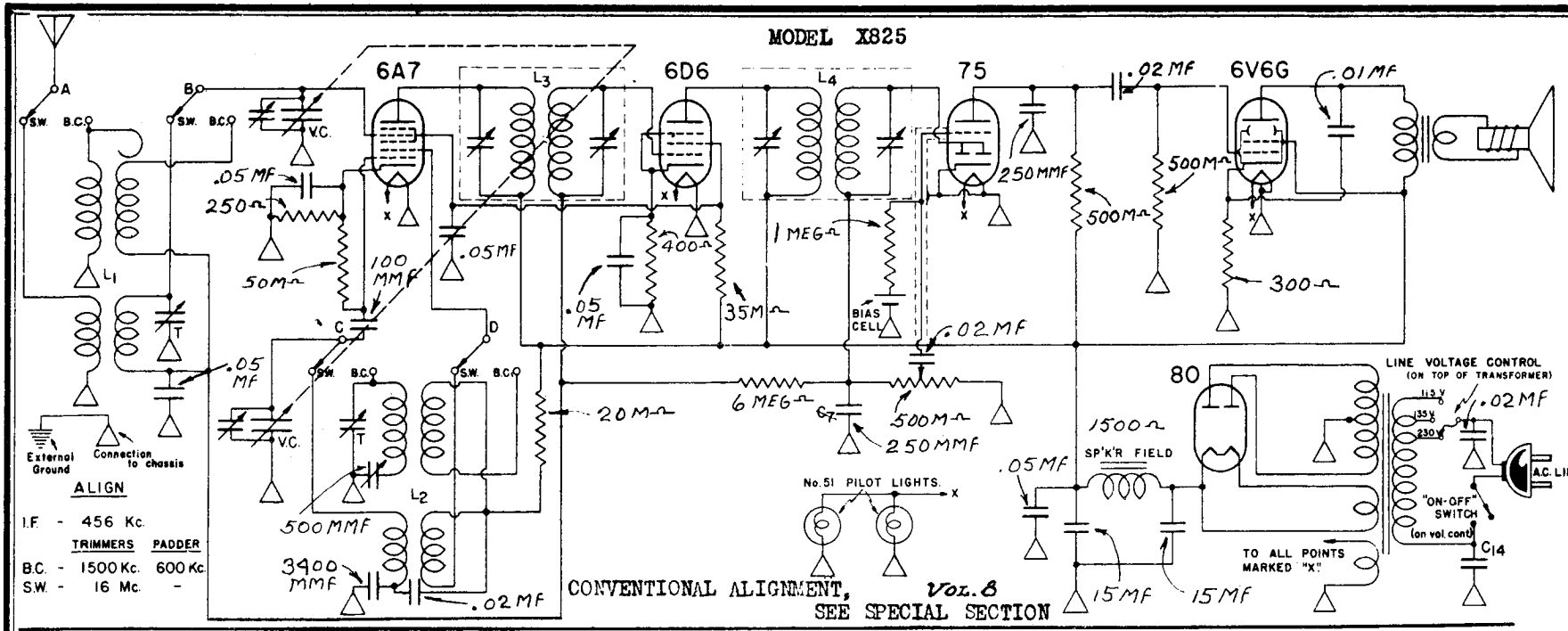

ALIGN

I.F. - 456 Kc.

	TRIMMERS	PADDER
B.C. -	1500 Kc.	600 Kc.
S.W. -	16 Mc.	-

CONVENTIONAL ALIGNMENT, *Vol. 8*
SEE SPECIAL SECTION

THE RECEIVER MODELS 720 AND 721 DO NOT USE THE EXTERNAL CHASSIS GROUND CONNECTION OR THE TONE CONTROL, SHOWN IN PHANTOM. OTHERWISE THE SCHEMATIC IS CORRECT FOR THESE MODELS.

MODELS 720,721,770,771,870 and 871

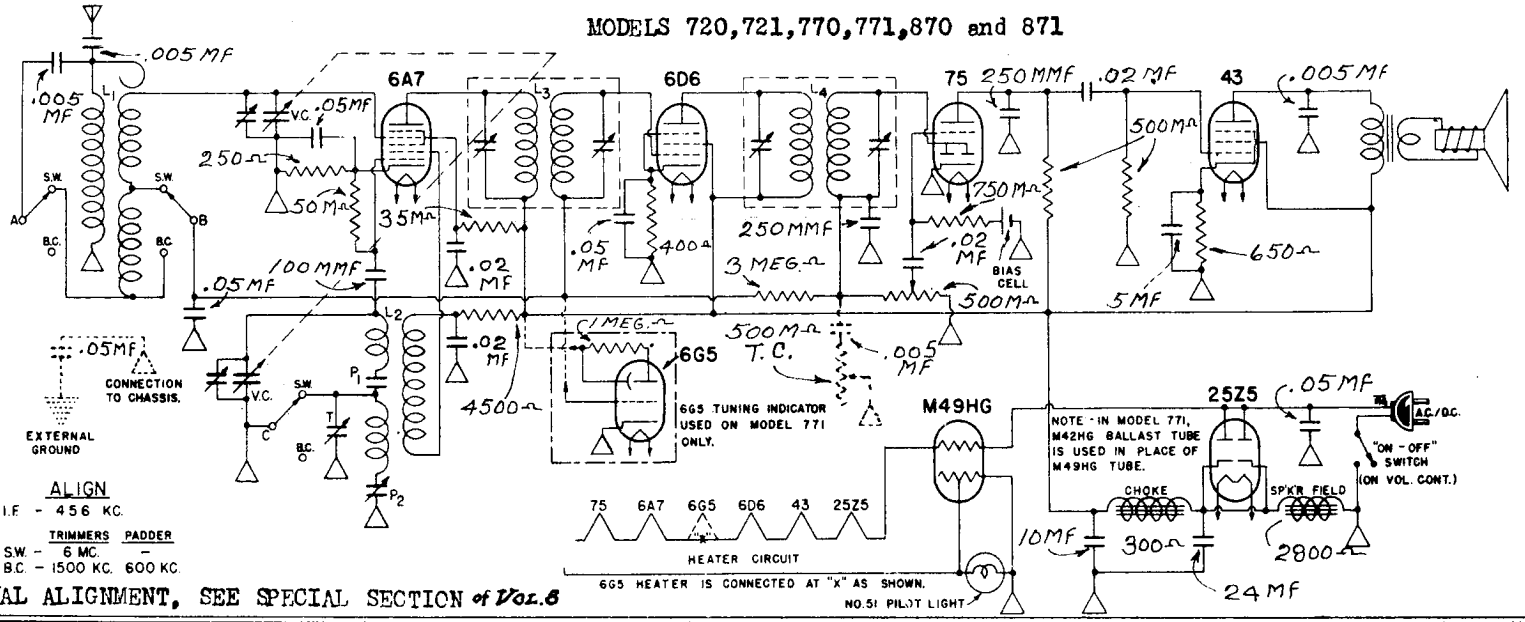

ALIGN

I.F. - 456 KC.

	TRIMMERS	PADDER
S.W. -	6 MC.	-
B.C. -	1500 KC.	600 KC.

CONVENTIONAL ALIGNMENT, SEE SPECIAL SECTION of *Vol. 8*

AIR KING PRODUCTS CORP.

MODEL 777
MODEL 910 Early
Schematics

MODEL 777

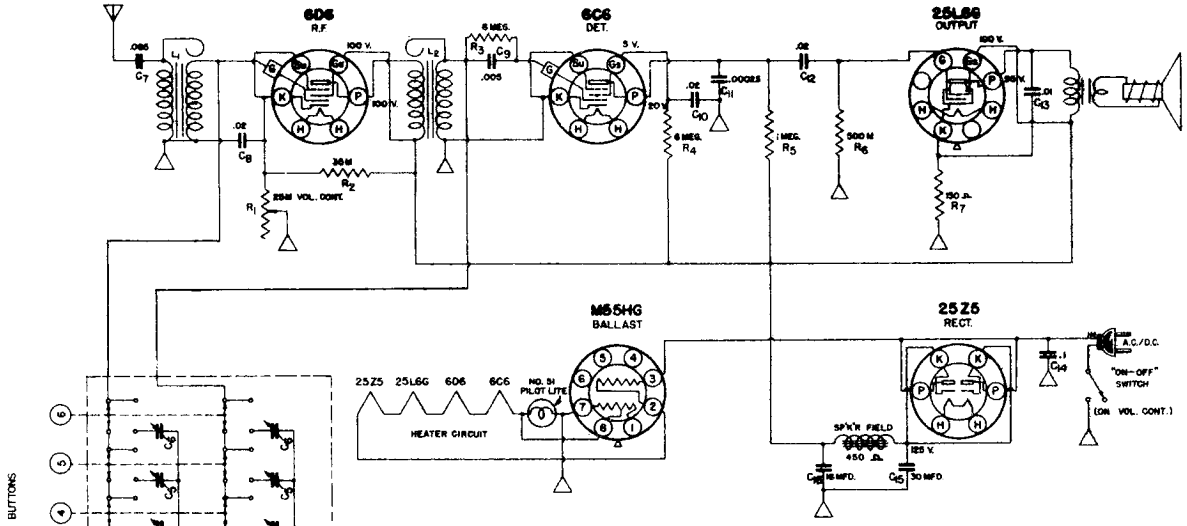

TUNING RANGE	CAPACITY RANGE
BUTTON NO.1 - 540-800 KC.	C_1 - 150-420 MMF.
BUTTON NO.2 - 600-1000 KC.	C_2 - 100-300 MMF.
BUTTON NO.3 - 600-1000 KC.	C_3 - 100-300 MMF.
BUTTON NO.4 - 700-1350 KC.	C_4 - 60-200 MMF.
BUTTON NO.5 - 700-1350 KC.	C_5 - 60-200 MMF.
BUTTON NO.6 - 950-1600 KC.	C_6 - 20-140 MMF.

TUBE SOCKETS ARE VIEWED FROM TOP SIDE OF CHASSIS.
VOLTAGE READINGS AT INDICATED SOCKET PRONGS ARE TO CHASSIS.
WHERE NO VOLTAGE READING IS SHOWN AT SOCKET PRONG, IT INDICATES A VERY LOW READING.
VOLTAGE MEASUREMENTS TAKEN WITH 1000 OHMS PER VOLT METER AND VOLUME CONTROL ON FULL.

MODEL 910

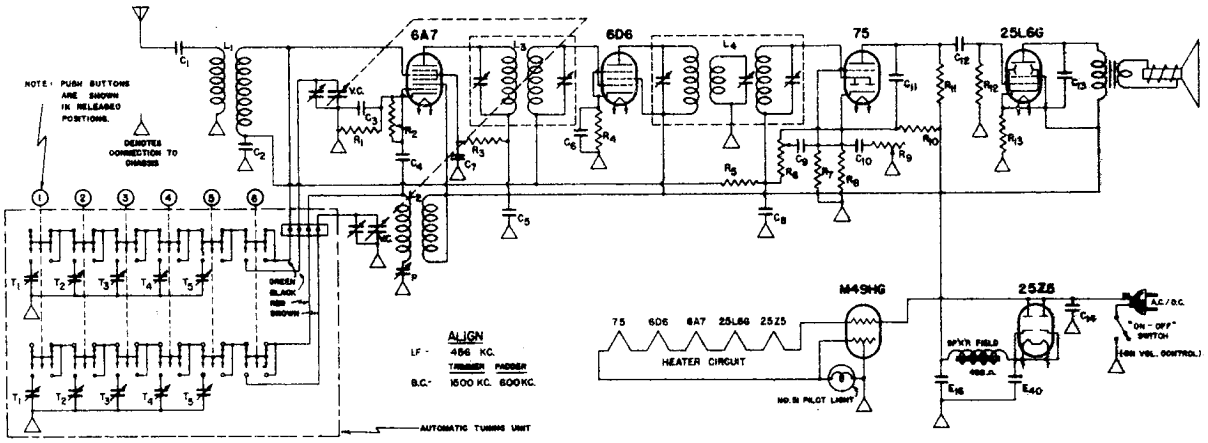

R_1 -	250	OHM	1/4 WATT
R_2 -	50,000	"	" "
R_3 -	35,000	"	" "
R_4 -	400	"	" "
R_5 -	3,000,000	"	" "
R_6 -	500,000	"	VOL. CONTROL
R_7 -	750,000	"	1/4 WATT
R_8 -	200	"	1 "
R_9 -	500,000	"	TONE CONTROL
R_{10} -	25,000	"	1/4 WATT
R_{11} -	500,000	"	" "
R_{12} -	500,000	"	" "
R_{13} -	150	"	" "

L_1 - ANTENNA COIL
L_2 - OSCILLATOR COIL
L_3 - 456 K.C. INPUT I.F.
L_4 - 456 K.C. TRIPLE TUNED OUTPUT I.F.

P - 700 MMF. MAX. PADDER

E_{16} - 16 MFD 150 V.W.
E_{40} 40 " " "

V.C.- 410 MMF. MAX VARIABLE COND.

T_1 - 5 PLATES
T_2, T_3 - 4 PLATES
T_4 - 3 PLATES
T_5 - 2 PLATES

C_1 -	.005 -	400 V.
C_2 -	.05 -	400 V.
C_3 -	.05 -	200 V.
C_4 -	.0001 -	MICA
C_5 -	.06 -	200 V.
C_6 -	.05 -	"
C_7 -	.02 -	400 V.
C_8 -	.0005 -	MICA
C_9 -	.02 -	400 V.
C_{10} -	.005 -	400 V.
C_{11} -	.00025 -	MICA
C_{12} -	.02 -	400 V.
C_{13} -	.01 -	"
C_{14} -	.05 -	"

©John F. Rider, Publisher

MODEL X 780B
MODEL 801
Schematics

AIR KING PRODUCTS CORP.

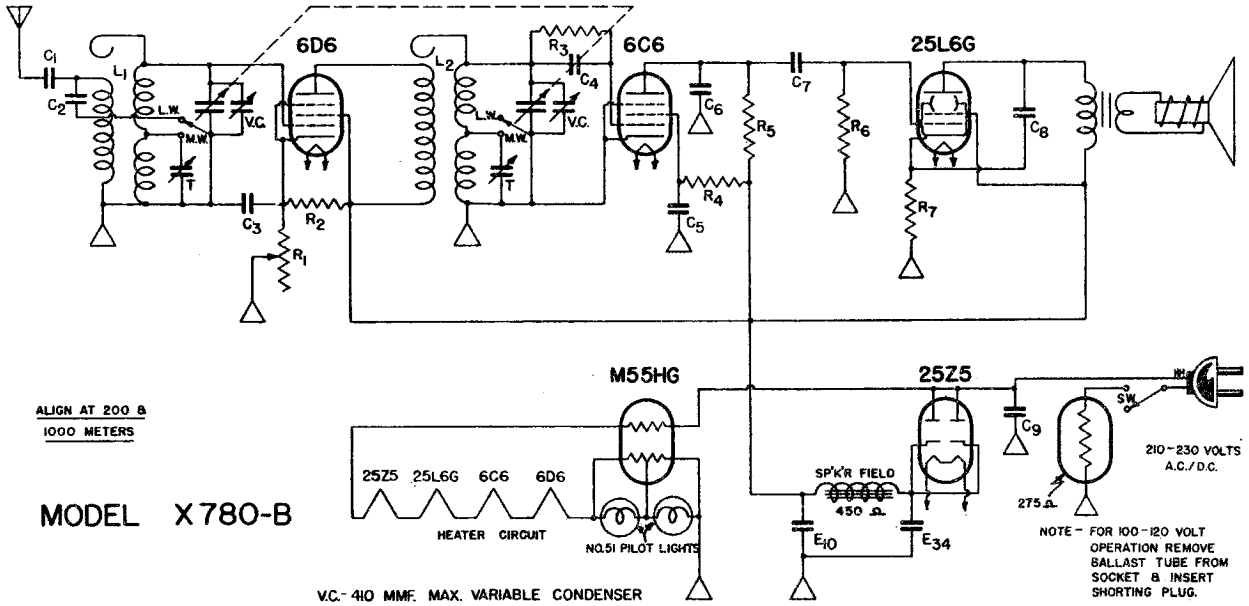

MODEL X780-B

V.C.- 410 MMF. MAX. VARIABLE CONDENSER

NOTE - FOR 100-120 VOLT OPERATION REMOVE BALLAST TUBE FROM SOCKET & INSERT SHORTING PLUG.

R_1 -	25,000	OHM	VOL. CONTROL	L_1 - COMBINATION ANTENNA COIL		C_1 -	.005	- 600 V.
R_2 -	35,000	"	1/4 WATT	L_2 - COMBINATION R.F. COIL		C_2 -	.00025	- MICA
R_3 -	6,000,000	"	" "			C_3 -	.02	- 400 V.
R_4 -	6,000,000	"	" "	E_{10} - 10 MFD. 150 V.W.		C_4 -	.005	- 600 V.
R_5 -	1,000,000	"	" "	E_{34} - 34 " " "		C_5 -	.02	- 400 V.
R_6 -	750,000	"	" "			C_6 -	.00025	- MICA
R_7 -	150	"	1 "	T - 3-35 MMF. TRIMMER		C_7 -	.02	- 400 V.
						C_8 -	.01	- "
						C_9 -	.05	- "

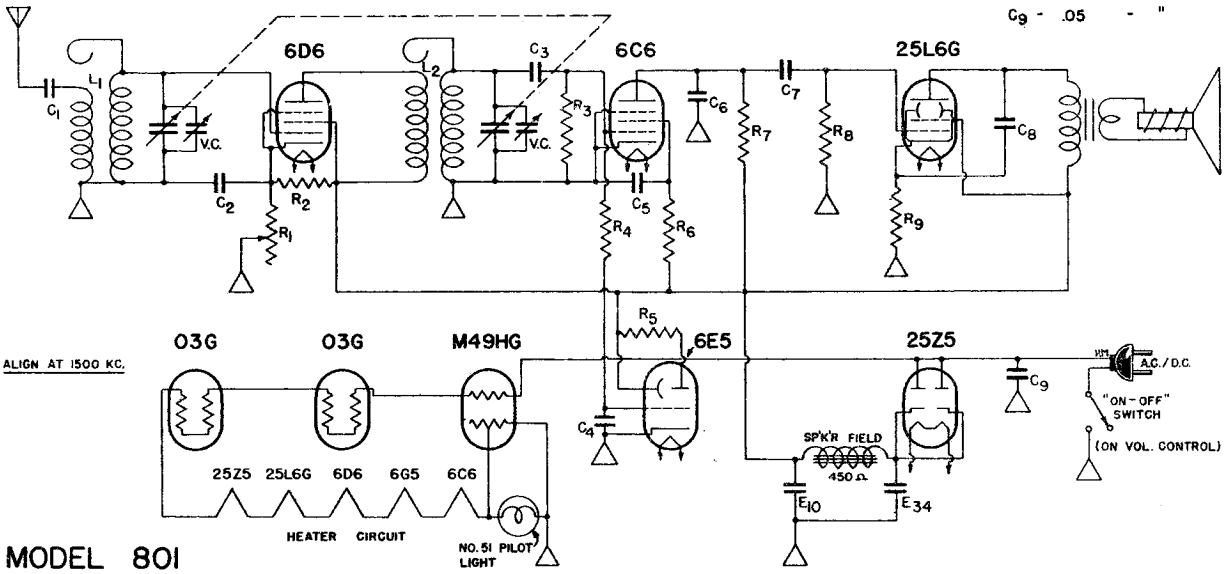

MODEL 801

V.C.- 410 MMF. MAX. VARIABLE COND.

R_1 -	25,000	OHM	VOL. CONTROL	L_1 - ANTENNA COIL		C_1 -	.005	- 600 V.
R_2 -	35,000	"	1/4 WATT	L_2 - R.F. COIL		C_2 -	.02	- 400 V.
R_3 -	6,000,000	"	" "			C_3 -	.005	- "
R_4 -	6,000,000	"	" "			C_4 -	.01	- 400 V.
R_5 -	1,000,000	"	" "	E_{10} - 10 MFD. 150 V.W.		C_5 -	.02	- "
R_6 -	6.000,000	"	" "	E_{34} - 34 " " "		C_6 -	.00025	- MICA
R_7 -	1,000,000	"	" "			C_7 -	.02	- 400 V.
R_8 -	750,000	"	" "			C_8 -	.01	- "
R_9 -	150	"	1/2 "			C_9 -	.05	- "

©John F. Rider, Publisher

©John F. Rider, Publisher

AIR KING PRODUCTS CORP.

MODEL 810
MODELS 828, 838
Schematics
Alignment

MODEL 810

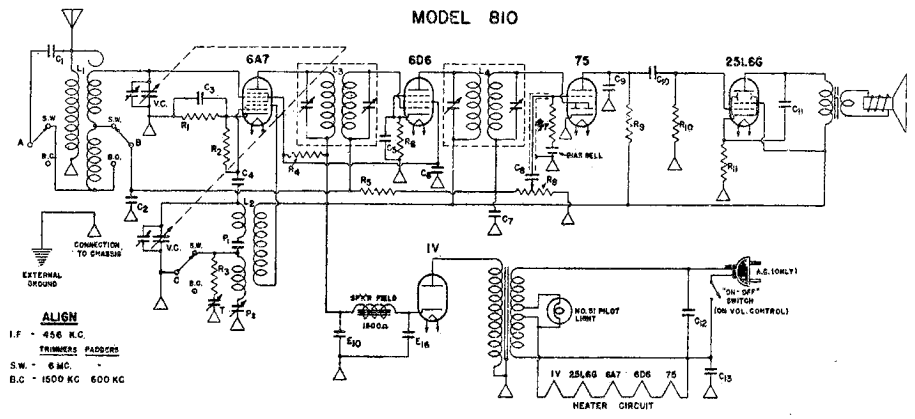

C_1	.005	400 V	
C_2	.02	200 V.	
C_3	.05	"	
C_4	.0001	MICA	
C_5	.05	400 V.	
C_6	.02	"	
C_7	.00025	MICA	
C_8	.02	400 V.	
C_9	.00025	MICA	
C_{10}	.02	400 V.	
C_{11}	.01	600 V	
C_{12}	.05	400 V	
C_{13}	.05	"	

R_1	250	OHM	1/4 WATT
R_2	50,000	"	"
R_3	85	"	"
R_4	25,000	"	"
R_5	3,000,000	"	"
R_6	400	"	"
R_7	750,000	"	"
R_8	500,000	"	VOL. CONTROL
R_9	500,000	"	1/4 WATT
R_{10}	500,000	"	"
R_{11}	300	"	"

SWITCHES A,B,C, - 3 POLE DOUBLE THROW WAVE BAND SWITCH

L_1 - COMBINATION ANTENNA COIL
L_2 - COMBINATION OSCILLATOR COIL
L_3 - 456 KC. INPUT I.F.
L_4 - 456 KC OUTPUT I.F.

P_1 - 1380 MMF. MICA PADDER
P_2 - 700 MMF. MAX. PADDER

E_{10} - 10 MFD. 250 V.W.
E_{16} - 16 " " "

V.C. - 410 MMF MAX. VARIABLE COND

T - 3-35 MMF TRIMMER

The frequency ranges covered are: Standard broadcast 540 to 1740 kc., Foreign Short Wave 7200 to 2150 kc.

CONVENTIONAL ALIGNMENT, SEE SPECIAL SECTION of *Vol. VIII*

MODELS 828, 838

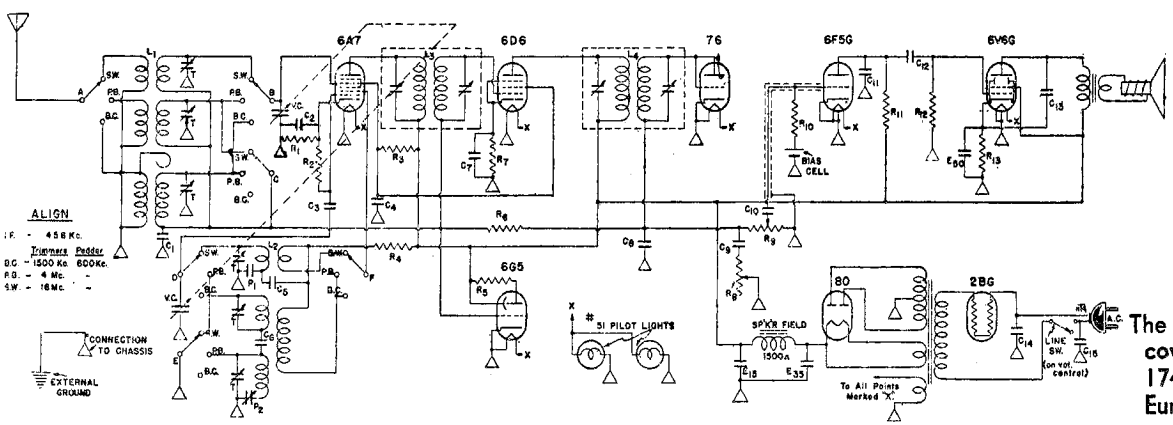

C_1	.05	200 V.	
C_2	.05	"	
C_3	.0001	MICA	
C_4	.02	400 V.	
C_5	.02	"	
C_6	.002175	MICA	
C_7	.05	200 V.	
C_8	.00025	MICA	
C_9	.005	400 V.	
C_{10}	.02	"	
C_{11}	.00025	MICA	
C_{12}	.02	400 V	
C_{13}	.01	"	
C_{14}	.02	"	
C_{15}	.02	"	

R_1	250	OHM	1/4 WATT
R_2	50,000	"	"
R_3	50,000	"	1/2 "
R_4	20,000	"	"
R_5	1,000,000	"	1/4 "
R_6	3,000,000	"	"
R_7	400	"	"
R_8	500,000	"	TONE CONTROL
R_9	500,000	"	VOL CONTROL
R_{10}	750,000	"	1/4 WATT
R_{11}	500,000	"	"
R_{12}	500,000	"	"
R_{13}	300	"	1 "

SW. A,B,C,D,E,F - 2 DECK: EACH DECK 3 SECTION, 1 TO 3 POSITION EACH SECTION.

L_1 - COMBINATION 3-BAND ANT. COIL
L_2 - COMBINATION 3-BAND OSC. COIL
L_3 - INPUT. I.F.
L_4 - OUTPUT I.F.

E_{15} - 15 MFD. - 350 P.V.
E_{35} - 35 " - 450 "
E_{50} - 50 " - 15 W.V.

V.C - 410 MMF. MAX. VARIABLE COND.

T - 935 MMF. TRIMMER

P_1 - 4700 MMF. PADDER
P_2 - 500 MMF MAX. PADDER

The frequency ranges covered are: Standard broadcast 540 to 1740 kc. - Police band 55 to 180 meters - European band 16 to 52 meters.

CONVENTIONAL ALIGNMENT, SEE SPECIAL SECTION of *Vol. VIII*

MODELS 1001B, 2001B
MODEL 2206
Schematics, Socket

AIR-KING PRODUCTS CORP.

MODEL 815
Schematic

TUBE SOCKET LOCATIONS

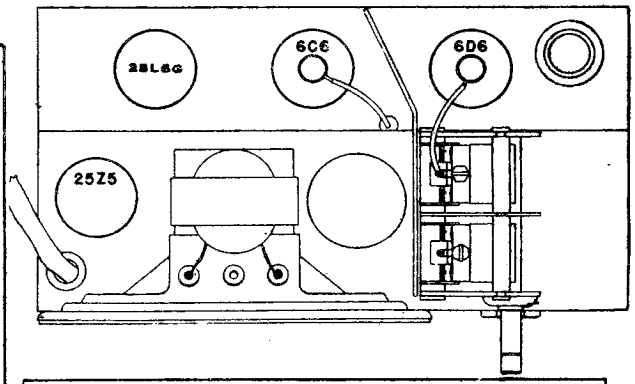

The frequency ranges covered are: Standard broadcast 540 to 1740 kc., Foreign Short Wave 7200 to 2150 kc.

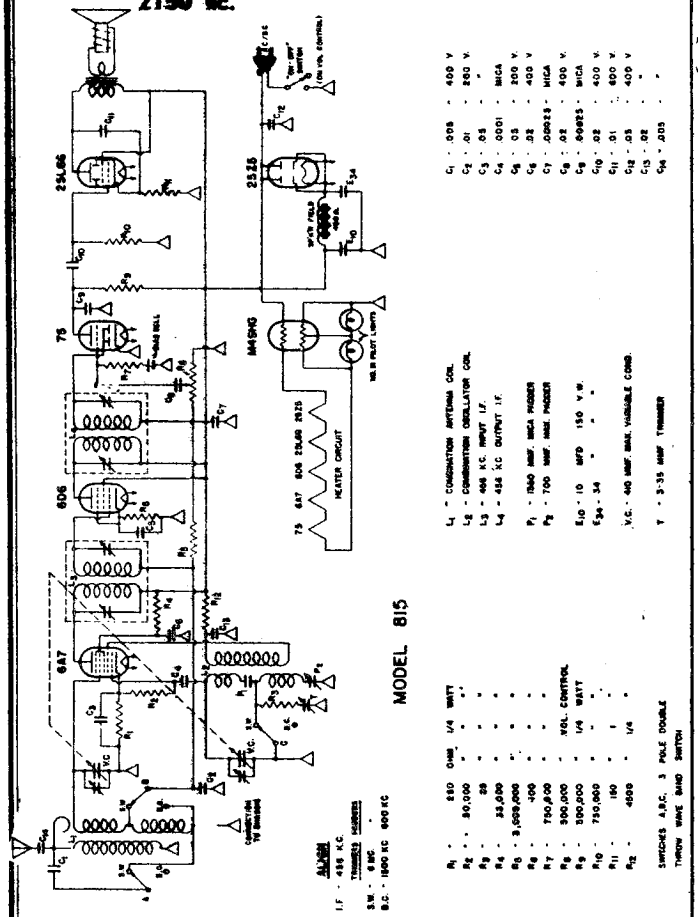

110 to 125 volts 50-60 cycles AC or DC

CAUTION – Do Not Connect Ground Wire to Chassis.

Models 1001-B, 2001-B

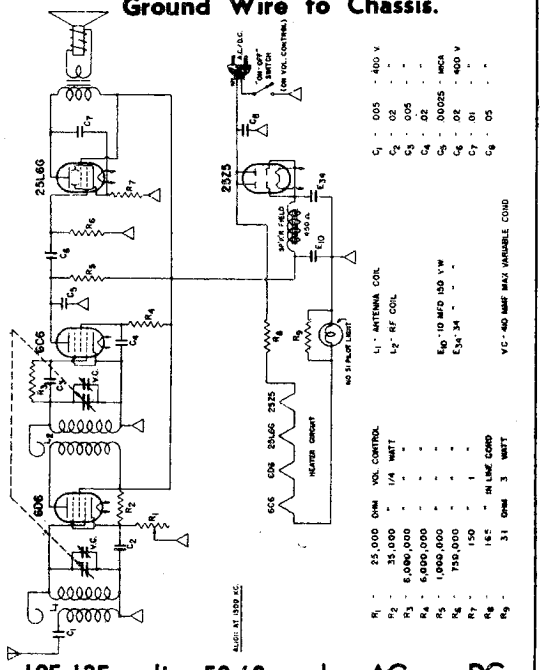

105-125 volts, 50-60 cycles AC or DC

The frequency range covered is 540-1740 kilocycles.

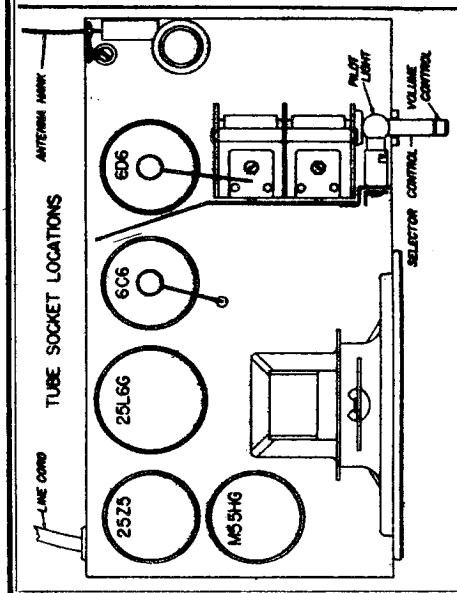

Do not connect ground wire to chassis.

MODEL 2206

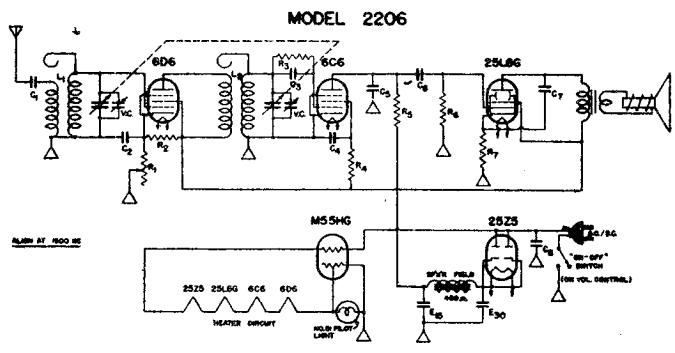

110 to 125 volts, 50-60 cycles AC or DC

The frequency range covered is 540-1740 kilocycles.

©John F. Rider, Publisher

AIR-KING PRODUCTS CORP.

MODELS 822,822X,826X,832
MODELS 823,833
MODELS 824,834
Schematics,Alignment

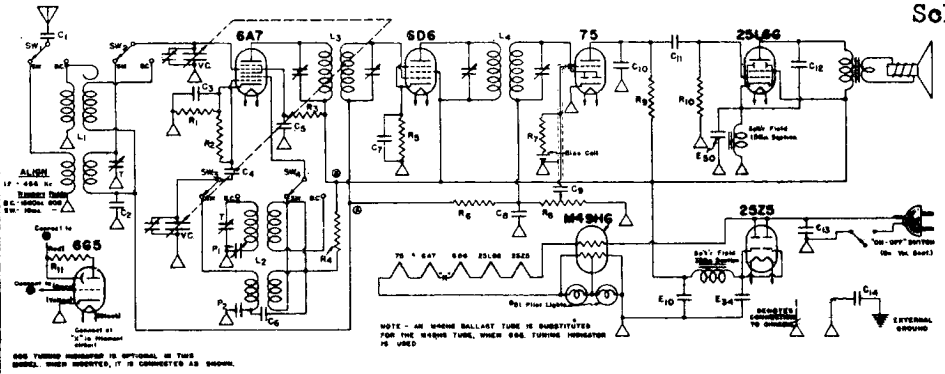

R_1	250	OHM	1/4 WATT
R_2	50,000	"	"
R_3	35,000	"	"
R_4	4,500	"	"
R_5	400	"	"
R_6	3,000,000	"	"
R_7	1,000,000	"	"
R_8	500,000	"	VOL CONTROL
R_9	500,000	"	1/4 WATT
R_{10}	500,000	"	"
R_{11}	1,000,000	"	"

SW 1,2,3,4 - 4 POLE DOUBLE THROW WAVE BAND SWITCH

L_1	COMB. ANTENNA COIL
L_2	COMB. OSCILLATOR COIL
L_3	456 KC. INPUT I.F.
L_4	456 KC. OUTPUT I.F.
P_1	500 MMF MAX.
P_2	.0034 MFD. MICA
E_{10}	10 MFD. 150 V.W.
E_{34}	34 MFD. " "
E_{50}	50 MFD. 15 "
VC	410 MMF MAX VARIABLE
T	3-35 MMF TRIMMER

C_1	.005	400 V.
C_2	.05	200 V.
C_3	.05	200 V.
C_4	.0001	MICA
C_5	.02	400 V.
C_6	.02	400 V.
C_7	.05	200 V.
C_8	.00025	MICA
C_9	.02	400 V.
C_{10}	.00025	MICA
C_{11}	.02	400 V.
C_{12}	.01	400 V.
C_{13}	.05	400 V.
C_{14}	.05	400 V.

MODELS 822, 822X, 826X and 832.

CONVENTIONAL ALIGNMENT SEE SPECIAL SECTION VOL. VIII

FREQUENCY RANGES :
540 to 1740 KC
5.7 to 18.7 MC

MODELS 823,833

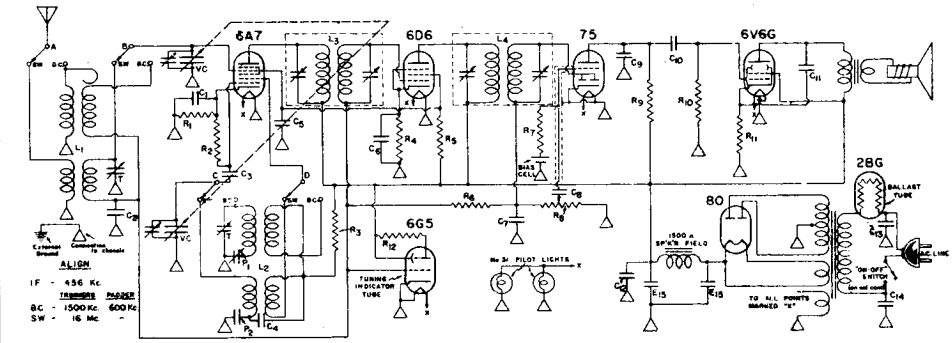

R_1	250	OHM	1/4 WATT
R_2	50,000	"	"
R_3	20,000	"	"
R_4	400	"	"
R_5	35,000	"	"
R_6	6,000,000	"	"
R_7	1,000,000	"	"
R_8	500,000	"	VOL. CONTROL
R_9	500,000	"	1/4 WATT
R_{10}	500,000	"	"
R_{11}	300	"	1/2 "
R_{12}	1,000,000	"	1/4 "

SWITCHES A,B,C,D - Four Pole Double Throw Wave Band Switch.

L_1	COMBINATION ANT COIL
L_2	COMBINATION OSC COIL
L_3	456 Kc INPUT I.F.
L_4	456 Kc OUTPUT I.F.
VC	410 MMF MAX VAR COND.
T	3-35 MMF TRIMMERS
P_1	500 MMF MAX PADDER
P_2	3400 MMF FIXED PADDER

C_1	.15	200 V.
C_2	.15	"
C_3	.0001	MICA
C_4	.02	400 V.
C_5	.05	200 V.
C_6	.05	"
C_7	.00025	MICA
C_8	.05	400 V.
C_9	.00025	MICA
C_{10}	.02	400 V.
C_{11}	.01	"
C_{12}	.05	"
C_{13}	.02	"
C_{14}	.1	"

MODELS 823, 833

CONVENTIONAL ALIGNMENT SEE SPECIAL SECTION VOL. VIII

FREQUENCY RANGES :
540 to 1740 KC
5.7 to 18.7 MC

MODELS 824,834

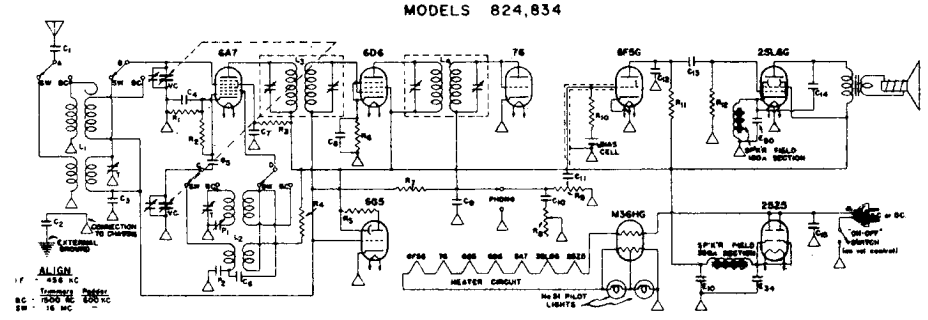

R_1	250	OHM	1/4 WATT
R_2	50,000	"	"
R_3	35,000	"	"
R_4	4,500	"	"
R_5	1,000,000	"	"
R_6	400	"	"
R_7	3,000,000	"	"
R_8	500,000	"	TONE CONTROL
R_9	500,000	"	VOL CONTROL
R_{10}	750,000	"	1/4 WATT
R_{11}	500,000	"	"
R_{12}	500,000	"	"

SWITCH A,B,C,D - 4 POLE DOUBLE THROW WAVE BAND SWITCH

L_1	COMBINATION 2-BAND ANT COIL
L_2	COMBINATION OSCILLATOR COIL
L_3	456 KC INPUT I.F.
L_4	456 KC OUTPUT I.F.
P_1	500 MMF MAX PADDER
P_2	.0034 MFD. MICA PADDER
E_{10}	10 MFD 150 V.W.
E_{34}	34 " " "
E_{50}	50 " 15 "
VC	440 MMF MAX VARIABLE COND
T	3-35 MMF TRIMMER

C_1	.005	400 V.
C_2	.03	"
C_3	.05	200 V.
C_4	.05	"
C_5	.0001	MICA
C_6	.02	400 V.
C_7	.05	"
C_8	.05	200 V.
C_9	.00025	MICA
C_{10}	.005	400 V.
C_{11}	.05	"
C_{12}	.00025	MICA
C_{13}	.02	400 V.
R_{14}	.01	"
C_{15}	.05	"

MODELS 824, 834

CONVENTIONAL ALIGNMENT SEE SPECIAL SECTION VOL. VIII

FREQUENCY RANGES :
540 to 1740 KC
5.7 to 18.7 MC

©John F. Rider, Publisher

MODEL 850
Schematic

AIR-KING PRODUCTS CORP.

MODEL 911
Schematic, Socket
Notes

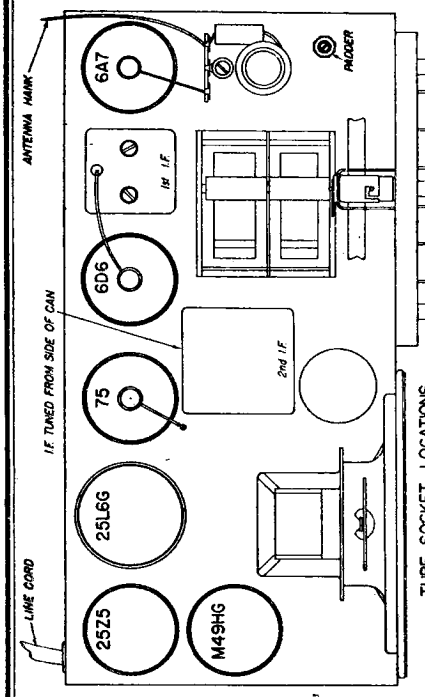

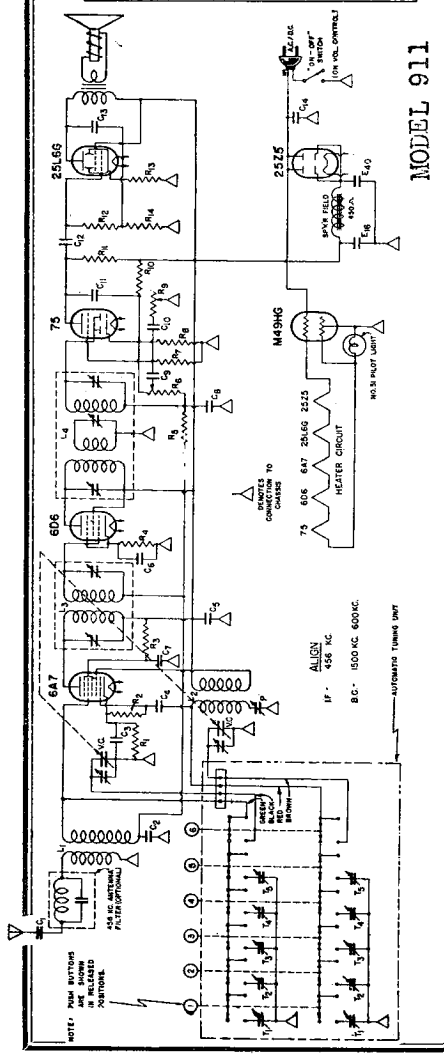

INSTRUCTIONS FOR ADJUSTING AUTOMATIC TUNING CONTROL

Refer to the diagram underneath cabinet and see which set of adjustment screws will have a tuning range that includes the frequency of the station desired. This is the pair of screws to be adjusted for this particular station. The ranges are listed under each pair of adjustment screws.
(WJZ's transmitting frequency, 760 kc., will be included in the range listed as 600-1000 kc. This pair of screws are to be adjusted for WJZ.)

From the same diagram, after finding where the proper pair of adjustment screws are located, trace dotted line connecting these screws to one of the push buttons. This is the button which, after the adjustments are completed, will tune in the station.
(For WJZ, the dotted line from the set of adjustment screws tuning from 600-1000 kc. connects to button No. 3.)

Push button located by paragraph 4 "IN."
(Push button No. 3 "IN" for WJZ.)

Turn volume control knob on full (to the extreme right) and adjust screw marked "O" until desired station is heard. (In this case until WJZ is heard.) If when making this adjustment, a number of stations can be brought in as the screw is turned and it is doubtful which station is the correct one, press button No. 6 (Manual Tuning) "IN" and move dial pointer by turning station selector knob, to the number on the dial that corresponds to the frequency of the station. (Turn pointer to 76 on the dial. This corresponds to WJZ's frequency 760 kc. The number on the dial must be multiplied by ten to give the frequency in kilocycles.) Listening to the program being broadcast will identify the station when adjusting screw "O."

Adjust screw marked "A" for maximum volume, retarding the volume control and readjusting if necessary. This completes the adjustments for this particular station.

MODEL No. 850

ANTENNA The antenna built into the set will perform to give best results in most localities. However, in communities located more than 100 miles away from a broadcasting station, an outside antenna of 50 to 75 feet may be necessary for better performance. This antenna should be attached to the end of the built in antenna hank.

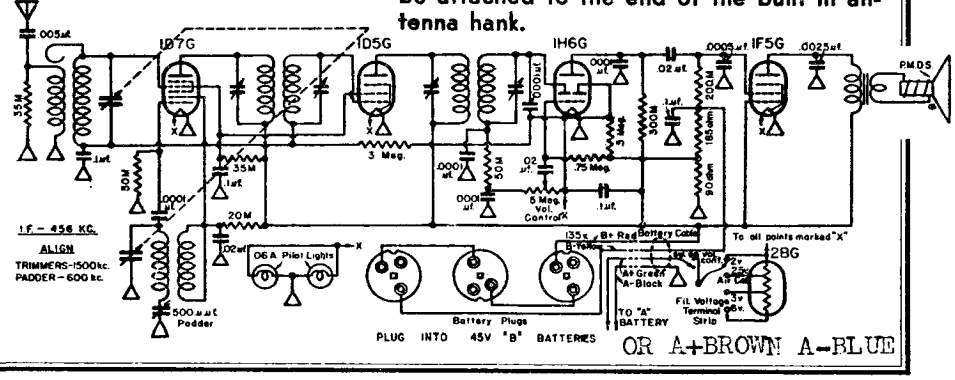

©John F. Rider, Publisher

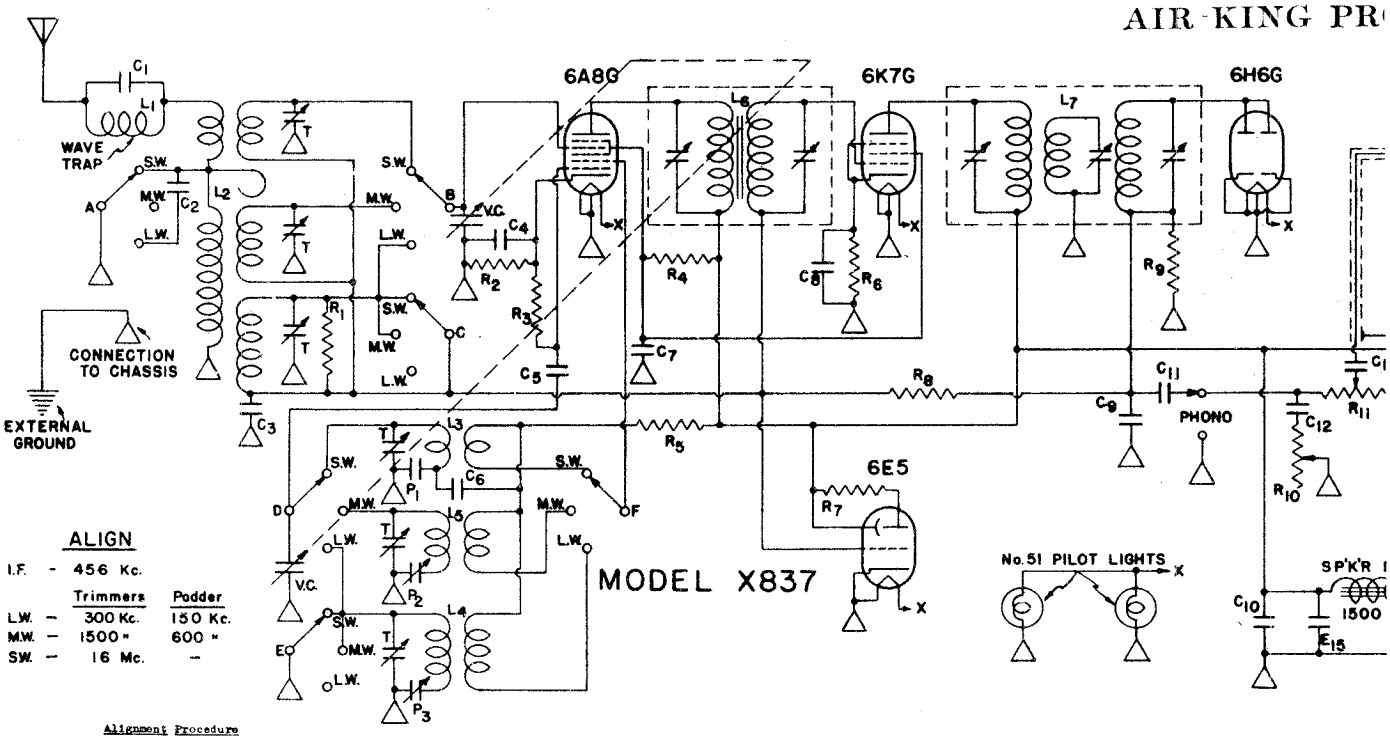

ALIGN

I.F. - 456 Kc.

	Trimmers	Padder
L.W. –	300 Kc.	150 Kc.
M.W. –	1500 "	600 "
S.W. –	16 Mc.	–

Alignment Procedure

1st Align I. F. at 456 Kc. as follows:
A- Align 1st I. F. as usual
B- Turn center trimmer of second I. F. Out Full, then tune top and bottom trimmers.
C- After tuning top and bottom trimmers exactly, then tune the center trimmer.

2nd Align M. W. Osc. trimmer at 200 M.
Align M. W. Ant. trimmer at 200 M.
Align M. W. Osc. padder at 500 M.
Recheck M. W. Ant. and Osc. at 200 M.

3rd Align L. W. Osc. padder at 2000 M.
Align L. W. Osc. trimmer at 1000 M.
Align L. W. Ant. trimmer at 1000 M.
Recheck L. W. Osc. padder at 2000 M.

4th Align S. W. Osc. trimmer at 16 M.
Align S. W. Ant. trimmer at 16 M.
Check S. W. at 49 M.

P_1 - 4700 MMF. PA
P_2 - 500 MMF. MAX.
P_3 - 300 " "

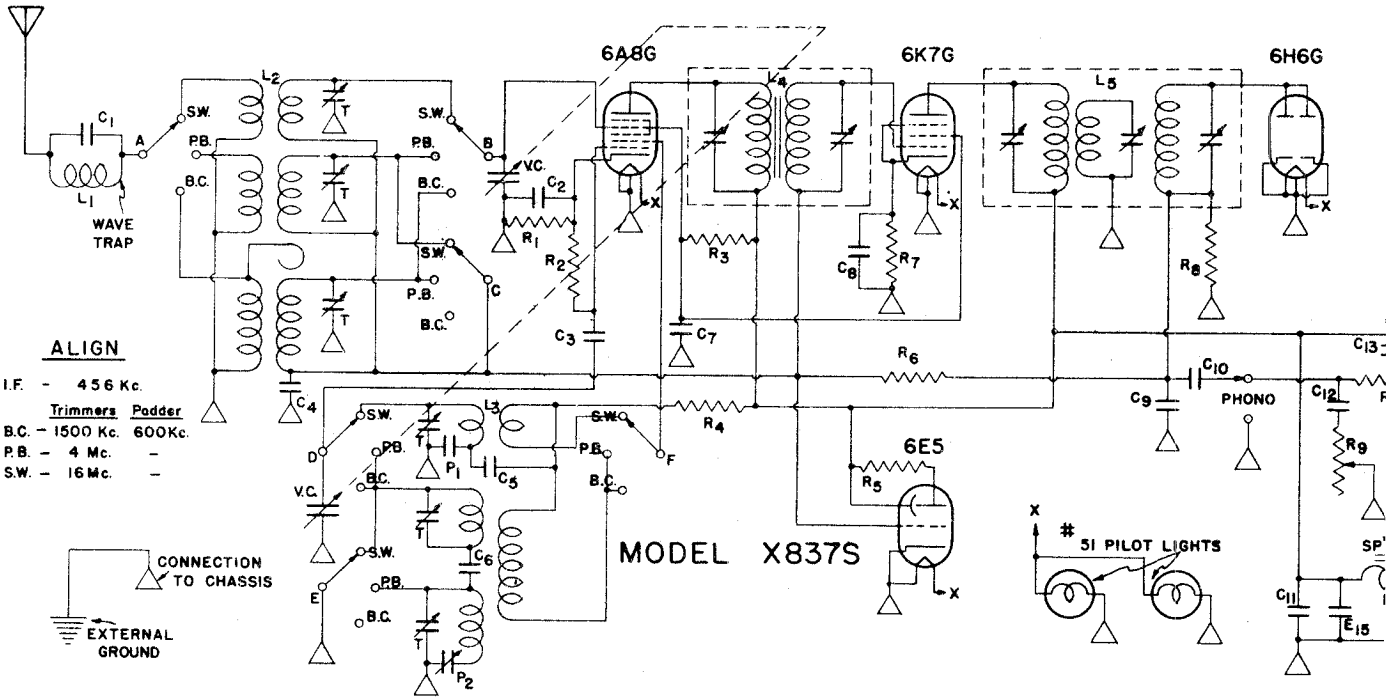

ALIGN

I.F. - 456 Kc.

	Trimmers	Padder
B.C. –	1500 Kc.	600Kc.
P.B. –	4 Mc.	–
S.W. –	16 Mc.	–

Alignment Procedure

1st Align I. F. at 456 Kc. as follows:
A-Align 1st I. F. as usual
B-Turn center trimmer of second I. F. Out Full then tune top and bottom trimmers.
C-After tuning top and bottom trimmers exactly, then tune the center trimmer.

2nd Align B. C. Osc. trimmer at 1500 Kc.
Align B. C. Ant. trimmer at 1500 Kc.
Align B. C. Osc. padders at 600 Kc.
Recheck B. C. Ant. and Osc. at 1500 Kc.

3rd Align P. B. Osc. trimmer at 4 mc.
Align P. B. Ant. trimmer at 4 mc.
Check P. B. at 2 mc.

4th Align S. W. Osc. trimmer at 16 mc.
Align S. W. Ant. trimmer at 16 mc.
Check S. W. at 6 mc.

P_1 - 4700 MMF. PAD
P_2 - 500 MMF. MAX

©John F. Rider, Publisher

ODUCTS CORP.

MODEL X837
MODEL X837S
Schematics, Alignment

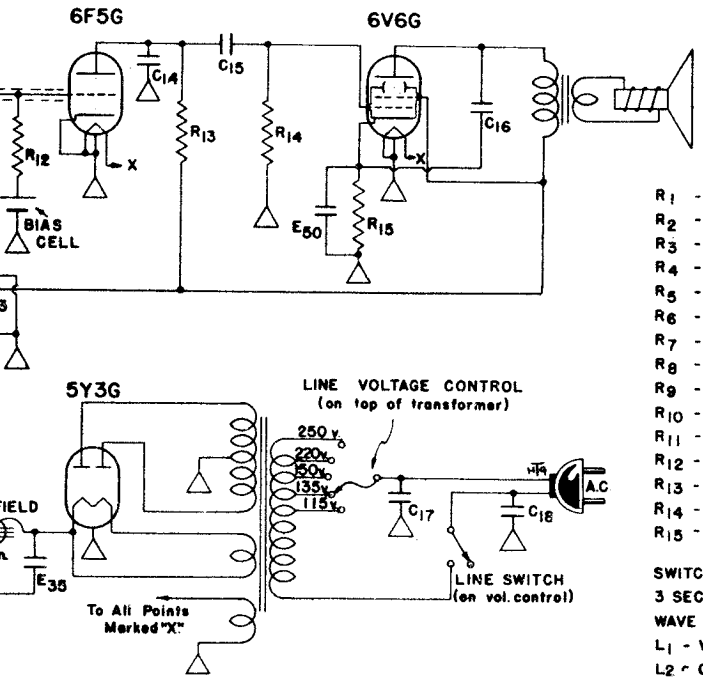

R_1	3,000,000	OHM	1/4	WATT
R_2	250	"	"	"
R_3	50,000	"	"	"
R_4	50,000	"	1/2	"
R_5	20,000	"	"	"
R_6	400	"	1/4	"
R_7	1,000,000	"	"	"
R_8	3,000,000	"	"	"
R_9	500,000	"	"	"
R_{10}	500,000	"	TONE CONTROL	
R_{11}	500,000	"	VOL. CONTROL	
R_{12}	750,000	"	1/4	WATT
R_{13}	500,000	"	"	"
R_{14}	500,000	"	"	"
R_{15}	300	"	1	"

SWITCHES A,B,C,D,E,F - 2 DECK: EACH DECK 3 SECTION, 1 TO 3 POSITION EACH SECTION:
WAVE BAND SWITCH.
L_1 - WAVE TRAP COIL
L_2 - COMBINATION 3-BAND ANT. COIL
L_3, L_4 - COMBINATION S.W. & L.W. OSC. COIL
L_5 - M.W. OSCILLATOR COIL
L_6 - IRON CORE INPUT I.F.
L_7 - TRIPLE TUNED OUTPUT I.F.

C_1	.0005	-	MICA	
C_2	.00025	-	"	
C_3	.05	-	400 V.	
C_4	.05	-	"	
C_5	.0001	-	MICA	
C_6	.02	-	400 V.	
C_7	.05	-	"	
C_8	.05	-	"	
C_9	.00025	-	MICA	
C_{10}	.1	-	400 V.	
C_{11}	.02	-	"	
C_{12}	.005	-	"	
C_{13}	.02	-	"	
C_{14}	.00025	-	MICA	
C_{15}	.02	-	400 V.	
C_{16}	.01	-	"	
C_{17}	.02	-	"	
C_{18}	.02	-	"	

E_{15}	15	MFD.	350	P.V.
E_{35}	35	"	450	"
E_{50}	50	"	15	W.V.

DER
PADDER
"

V.C. - 410 MMF. MAX. VARIABLE COND.

T - 3-35 MMF. TRIMMER

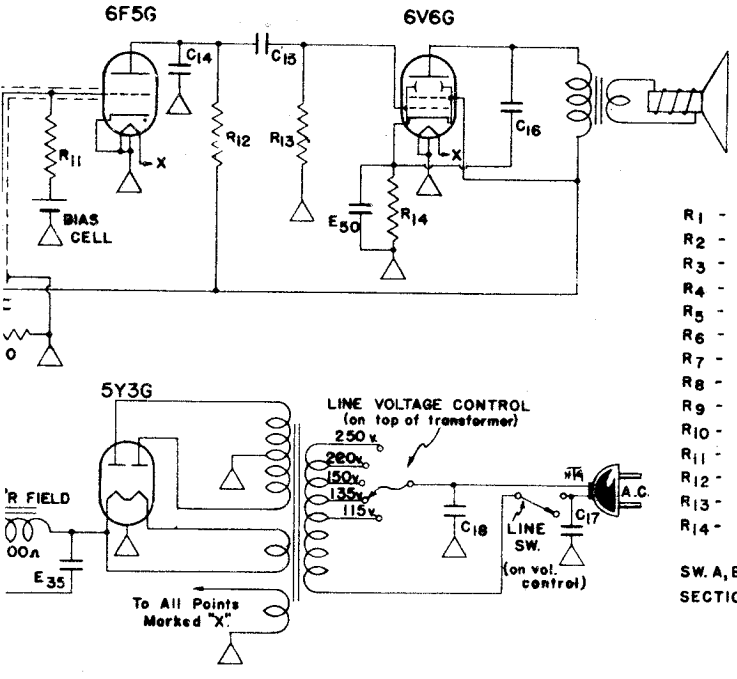

R_1	250	OHM	1/4	WATT
R_2	50,000	"	"	"
R_3	50,000	"	1/2	"
R_4	20,000	"	"	"
R_5	1,000,000	"	1/4	"
R_6	3,000,000	"	"	"
R_7	400	"	"	"
R_8	500,000	"	"	"
R_9	500,000	"	TONE	CONTROL
R_{10}	500,000	"	VOL.	CONTROL
R_{11}	750,000	"	1/4	WATT
R_{12}	500,000	"	"	"
R_{13}	500,000	"	"	"
R_{14}	300	"	1	"

SW. A,B,C,D,E,F - 2 DECK: EACH DECK 3 SECTION, 1 TO 3 POSITION EACH SECTION.

L_1 - WAVE TRAP COIL
L_2 - COMBINATION 3-BAND ANT. COIL
L_3 - COMBINATION 3-BAND OSC. COIL
L_4 - IRON CORE INPUT I.F.
L_5 - TRIPLE TUNED OUTPUT I.F.

C_1	.0005	-	MICA	
C_2	.05	-	400 V.	
C_3	.0001	-	MICA	
C_4	.05	-	400 V.	
C_5	.02	-	"	
C_6	.002175	-	MICA	
C_7	.05	-	400 V.	
C_8	.05	-	"	
C_9	.00025	-	MICA	
C_{10}	.02	-	400 V.	
C_{11}	.1	-	"	
C_{12}	.005	-	"	
C_{13}	.02	-	"	
C_{14}	.00025	-	MICA	
C_{15}	.02	-	400 V.	
C_{16}	.01	-	"	
C_{17}	.02	-	"	
C_{18}	.02	-	"	

E_{15}	15	MFD.	350	P.V.
E_{35}	35	"	450	"
E_{50}	50	"	15	W.V.

ER
PADDER

V.C - 410 MMF. MAX. VARIABLE COND.

T - 3-35 MMF. TRIMMER

AIR KING PRODUCTS CORP.

MODEL 908
MODEL 909
Schematic, Socket

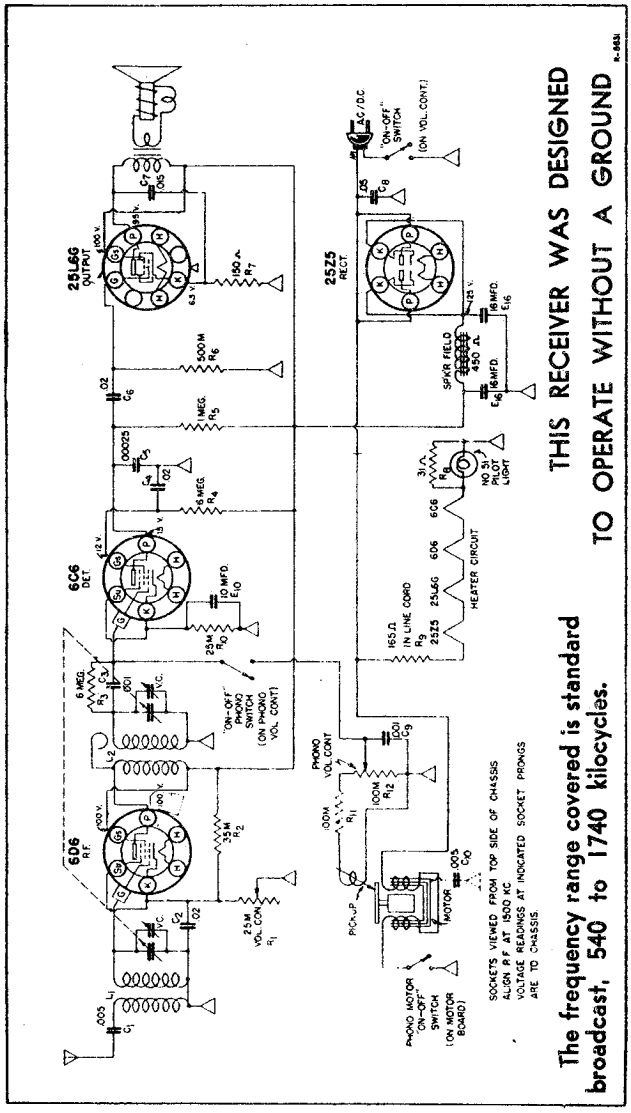

105-125 volts, 50-60 cycles, a.c.
(The radio portion of this instrument will operate on d.c. as well as on a.c. current.
UNDER NO CONDITION SHOULD THE PHONOGRAPH BE OPERATED ON D.C.

MODEL No. 908
Radio-Phono Combination

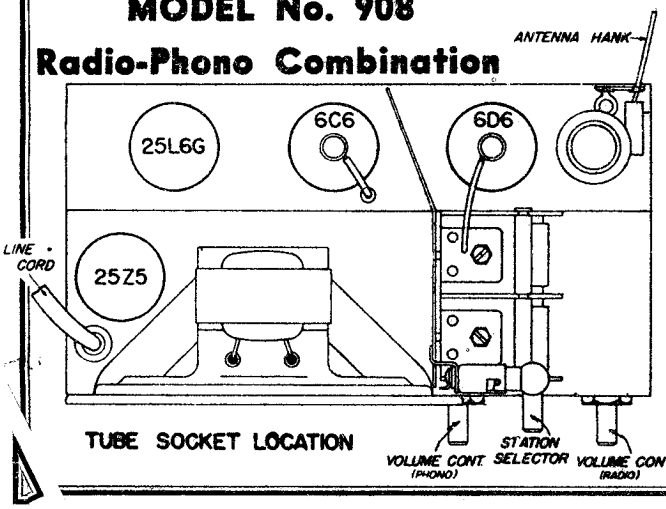

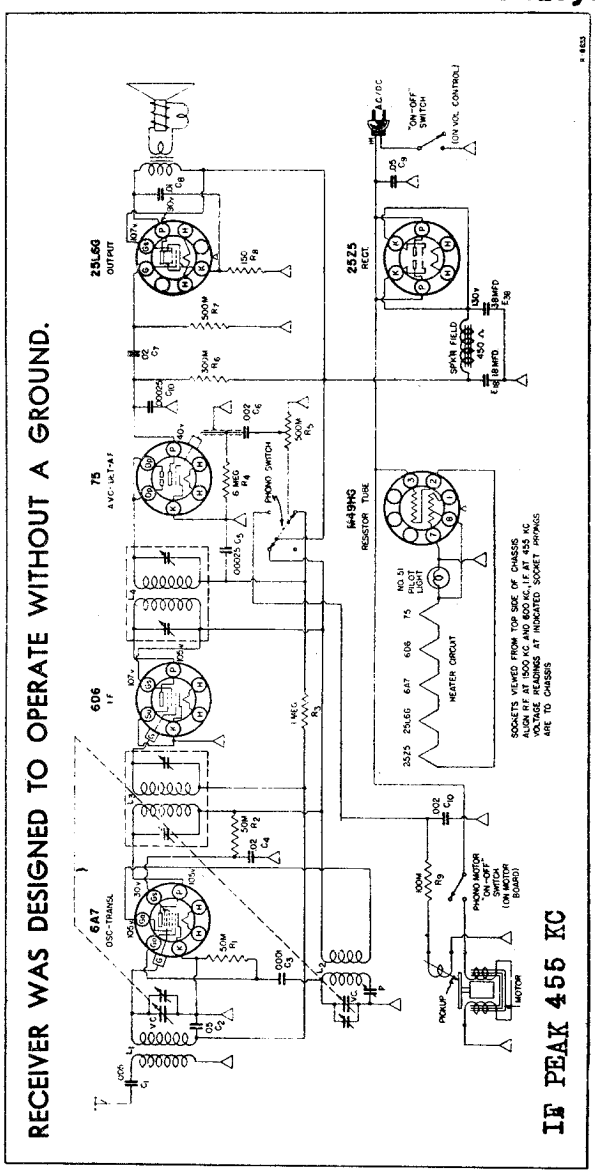

110 to 125 volts, 50-60 cycles, AC
frequency range 540-1740 kilocycles.

(c) The radio portion of this combination may also be operated on the DC power lines. UNDER NO CIRCUMSTANCES SHOULD ONE ATTEMPT TO OPERATE THE PHONO ON DC, as it will damage the phono motor.

MODEL No. 909
Radio-Phono Combination

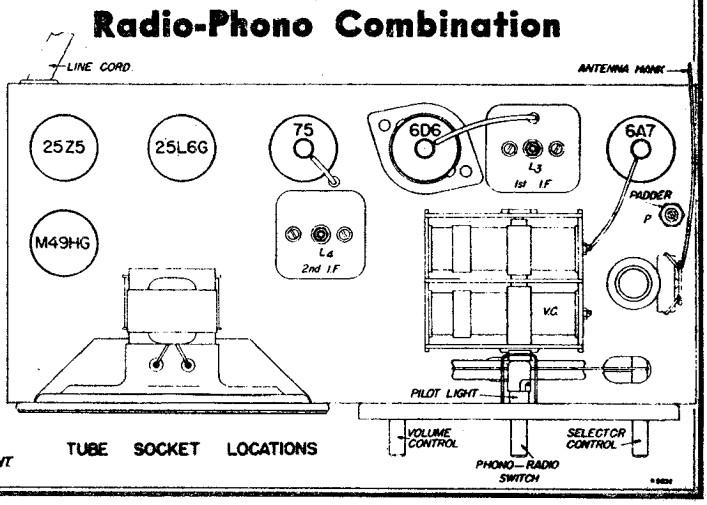

© John F. Rider, Publisher

MODEL X8312
Schematic, Alignment

AIR KING PRODUCTS CORP.

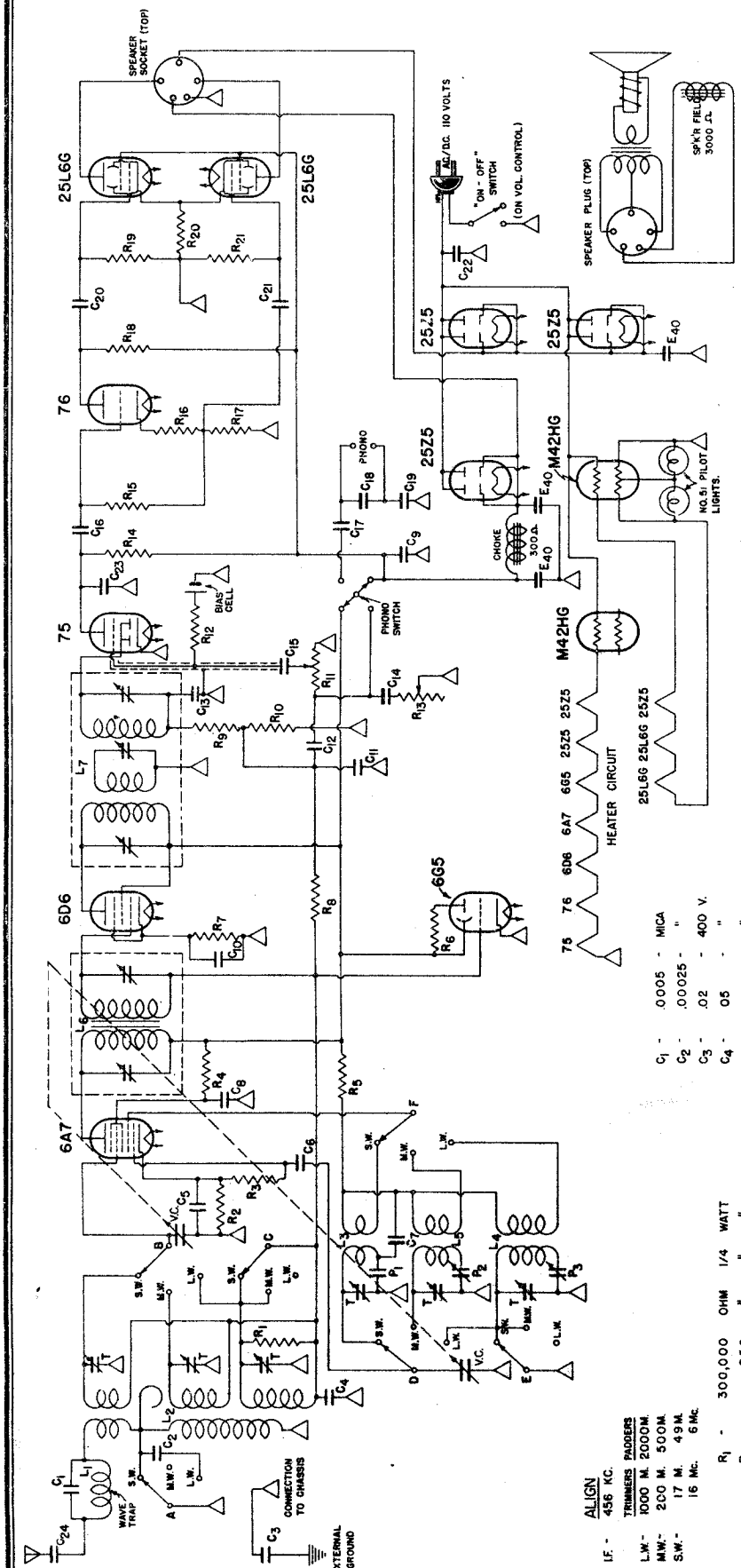

MODEL X8312

I.F. - 456 KC.
ALIGN

	TRIMMERS	PADDERS
L.W. -	1000 M.	2000 M.
M.W. -	200 M.	500 M.
S.W. -	17 M.	49 M.
	16 Mc.	6 Mc.

R_1 -	300,000	OHM	1/4	WATT
R_2 -	250	"	"	"
R_3 -	50,000	"	"	"
R_4 -	35,000	"	"	"
R_5 -	5,000	"	"	"
R_6 -	1,000,000	"	"	"
R_7 -	400	"	"	"
R_8 -	1,000,000	"	"	"
R_9 -	500,000	"	"	"
R_{10} -	50,000	"	"	"
R_{11} -	500,000	"	VOL. CONTROL	
R_{12} -	750,000	"	1/4	WATT
R_{13} -	500,000	"	TONE CONTROL	
R_{14} -	500,000	"	1/4	WATT
R_{15} -	500,000	"	"	"
R_{16} -	5,000	"	"	"
R_{17} -	100,000	"	"	"
R_{18} -	100,000	"	"	"
R_{19} -	500,000	"	"	"
R_{20} -	75	"	"	"
R_{21} -	500,000	"	"	"

C_1 -	.0005	-	MICA
C_2 -	.00025	-	"
C_3 -	.02	-	400 V.
C_4 -	.05	-	"
C_5 -	.1	-	"
C_6 -	.0001	-	MICA
C_7 -	.02	-	400 V.
C_8 -	.02	-	"
C_9 -	.1	-	"
C_{10} -	.05	-	"
C_{11} -	.0001	-	MICA
C_{12} -	.05	-	400 V.
C_{13} -	.0001	-	MICA
C_{14} -	.005	-	600 V.
C_{15} -	.05	-	400 V.
C_{16} -	.05	-	"
C_{17} -	.1	-	"
C_{18} -	.00025	-	MICA
C_{19} -	.1	-	400 V.
C_{20} -	.05	-	"
C_{21} -	.05	-	"
C_{22} -	.1	-	"
C_{23} -	.00025	-	MICA
C_{24} -	.005	-	600 V.

L_1 - WAVE TRAP COIL
L_2 - COMBINATION 3-BAND ANT. COIL
L_3, L_4 - COMBINATION S.W. & L.W. OSC. COIL
L_5 - M.W. OSCILLATOR COIL
L_6 - IRON CORE INPUT I.F.
L_7 - TRIPLE TUNED OUTPUT I.F.

E_{40} - 40 MFD. 150 W.V.

V.C. - 410 MMF. MAX. VARIABLE COND.

T - 3-35 MMF. TRIMMER

P_1 - 4700 MMF. FIXED PADDER
P_2 - 500 MMF. MAX. PADDER
P_3 - 300 " " "

SWITCHES A,B,C,D,E,F - 2 DECK: EACH DECK
3 SECTION, 1 TO 3 POSITION EACH SECTION:
WAVE BAND SWITCH

©John F. Rider, Publisher

Schematic, Socket Trimmers, Voltage Layout

ALLIED RADIO CORP.

MODELS A9740, A9825
Chassis 69U

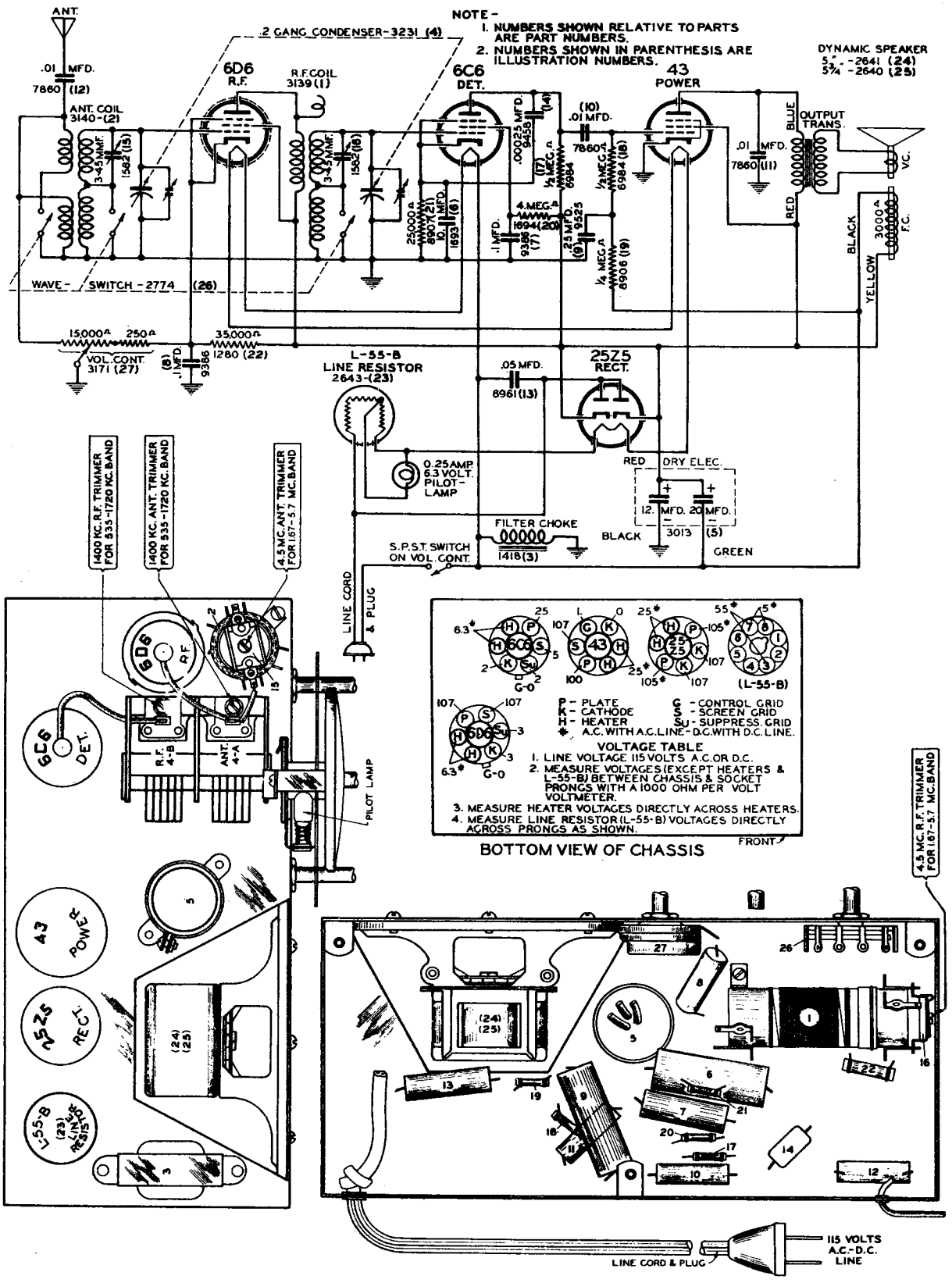

©John F. Rider, Publisher

MODELS A9740, A9825
Chassis 69U

ALLIED RADIO CORP.

Alignment, Coils
Parts

Lack of sensitivity, selectivity or poor tone quality may be due to any one or a combination of causes such as weak or defective tubes or speaker, open or grounded bias resistor, bypass condenser, inadequate or excessively long antenna, etc. Never attempt to realign set until all other possible sources of trouble have been first thoroughly investigated and definitely proven not to be the cause.

NOTE: BE SURE TO FOLLOW PROCEDURE CAREFULLY WHEN ALIGNING, OTHERWISE THE RECEIVER WILL BE INSENSITIVE AND THE DIAL CALIBRATION WILL BE INCORRECT.

IT IS ABSOLUTELY NECESSARY THAT AN ACCURATELY CALIBRATED TEST OSCILLATOR WITH SOME TYPE OF OUTPUT MEASURING DEVICE BE USED WHEN ALIGNING THE RECEIVER.

ALIGNING 1720-535 KILOCYCLE BAND:

(a) Connect the ground lead of the test oscillator to the rotor frame of the gang condenser and the other test oscillator lead to the receiver antenna lead through a .00025 Mfd. series condenser.

(b) Check tuning dial adjustment by turning gang condenser until plates touch maximum capacity stop, (completely in mesh) at which point the dial needle must be exactly even with the last line at the low frequency end of the dial calibration. If the dial needle does not point exactly to the last line, move needle to correct position.

(c) Adjust band selector switch for operation on 1720-535 kilocycle band, set test oscillator frequency and receiver dial to 1400 kilocycles.

(d) Adjust trimmers mounted on top of gang condenser for maximum 1400 kilocycle test oscillator signal output.

(e) Check dial calibration and sensitivity at 1000 kilocycles, 700 kilocycles and 600 kilocycles. If gang condenser plates have not been bent and if antenna and R.F. coils are in good condition the gang condenser will properly track all over the band. If sensitivity is low and dial calibration incorrect, it may be necessary to bend the condenser plates at above frequencies to properly align the receiver.

IMPORTANT: Bending of plates is to be avoided if at all possible.

ALIGNING 1.67-5.7 MEGACYCLE BAND:

(a) Replace .00025 Mfd. test oscillator lead series condenser with a 400 ohm resistor. Adjust band selector switch for operation on 1.67 to 5.7 megacycle band and tune receiver dial and set test oscillator frequency to EXACTLY 4.5 megacycles.

(b) Adjust the two trimmers mounted on the antenna and R.F. coil, one of which is located underneath the chassis, and one on top of the chassis for maximum 4.5 megacycle test oscillator signal response.

(c) Check dial calibration at 3 megacycles and 1.7 megacycles, BUT DO NOT BEND GANG CONDENSER PLATES ON THIS BAND.

(d) To assure adequate sensitivity regeneration is present on this band. Receiver should oscillate around 2.5 megacycles when the volume control is at maximum volume position. If oscillation cannot be controlled with volume control, oscillation may be reduced by spreading out or uncoiling a few turns of the coupling coil, which is located underneath the chassis between the wave switch and volume control.

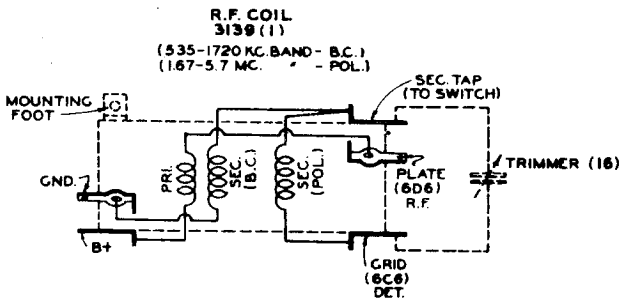

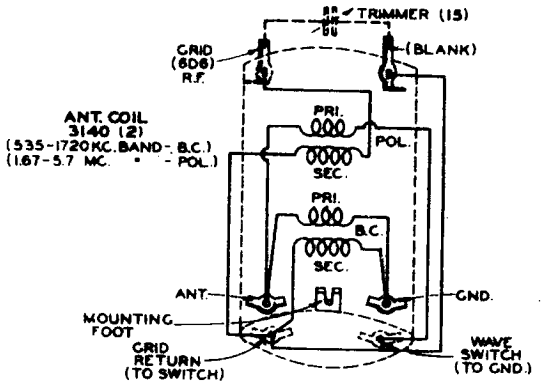

Illus. No.	Part No.	Part Name	Description	List Price
1	3139	Coil	R.F.	$ .83
2	3140	Coil	Antenna	.83
3	1418	Choke	Filter	.92
4	3231	Condenser	Two Gang Tuning	2.65
5	3013	Condenser	Dry Electrolytic (1-12 & 1-20 Mfd.)	1.50
6	1693	Condenser	Dry Electrolytic Tubular 10 Mfd.	.75
7	9386	Condenser	Tubular .1 Mfd. 200 Volt	.19
8	9386	Condenser	Tubular .1 Mfd. 200 Volt	.19
9	9525	Condenser	Tubular .25 Mfd. 200 Volt	.24
10	7860	Condenser	Tubular .01 Mfd. 400 Volt	.17
11	7860	Condenser	Tubular .01 Mfd. 400 Volt	.17
12	7860	Condenser	Tubular .01 Mfd. 400 Volt	.17
13	8961	Condenser	Tubular .05 Mfd. 400 Volt	.19
14	9458	Condenser	Mica .00025 Mfd.	.21
15	1582	Condenser	Trimmer (3-45 M.M.F.)	.21
16	1582	Condenser	Trimmer (3-45 M.M.F.)	.21
17	6984	Resistor	Carbon 500,000 Ohm 1/3 Watt	.19
18	6984	Resistor	Carbon 500,000 Ohm 1/3 Watt	.19
19	8906	Resistor	Carbon 250,000 Ohm 1/3 Watt	.19
20	1694	Resistor	Carbon 4 Meg. Ohm 1/3 Watt	.19
21	8907	Resistor	Carbon 25,000 Ohm 1/3 Watt	.19
22	1280	Resistor	Carbon 35,000 Ohm 1/2 Watt	.19
23	2643	Resistor	Line with Tube Type Octal Base Marked L-55-B	.75
24	2641	Speaker	Dynamic (5")	4.75
25	2640	Speaker	Dynamic (5¾")	5.25
26	2774	Switch	Band Selector	.69
27	3171	Volume Control	With On-Off Switch	1.05
			MISCELLANEOUS	
	2250	Bulb	6.3 Volt. .250 Amp. Dial Light	.19
	3111	Dial Assembly	Complete Tuning Assembly (Mention Required Name)	2.75
	3112	Dial Scale	Calibrated Scale (Mention Required Name)	.50
	3300	Glass	For Dial	.35
	3031	Knob	Small	.19
	3032	Knob	Large	.18

Prices are subject to change without notice.

Part No. 69U

©John F. Rider, Publisher

ALLIED RADIO CORP.

MODEL A9741
Chassis 72A
Schematic, Voltage

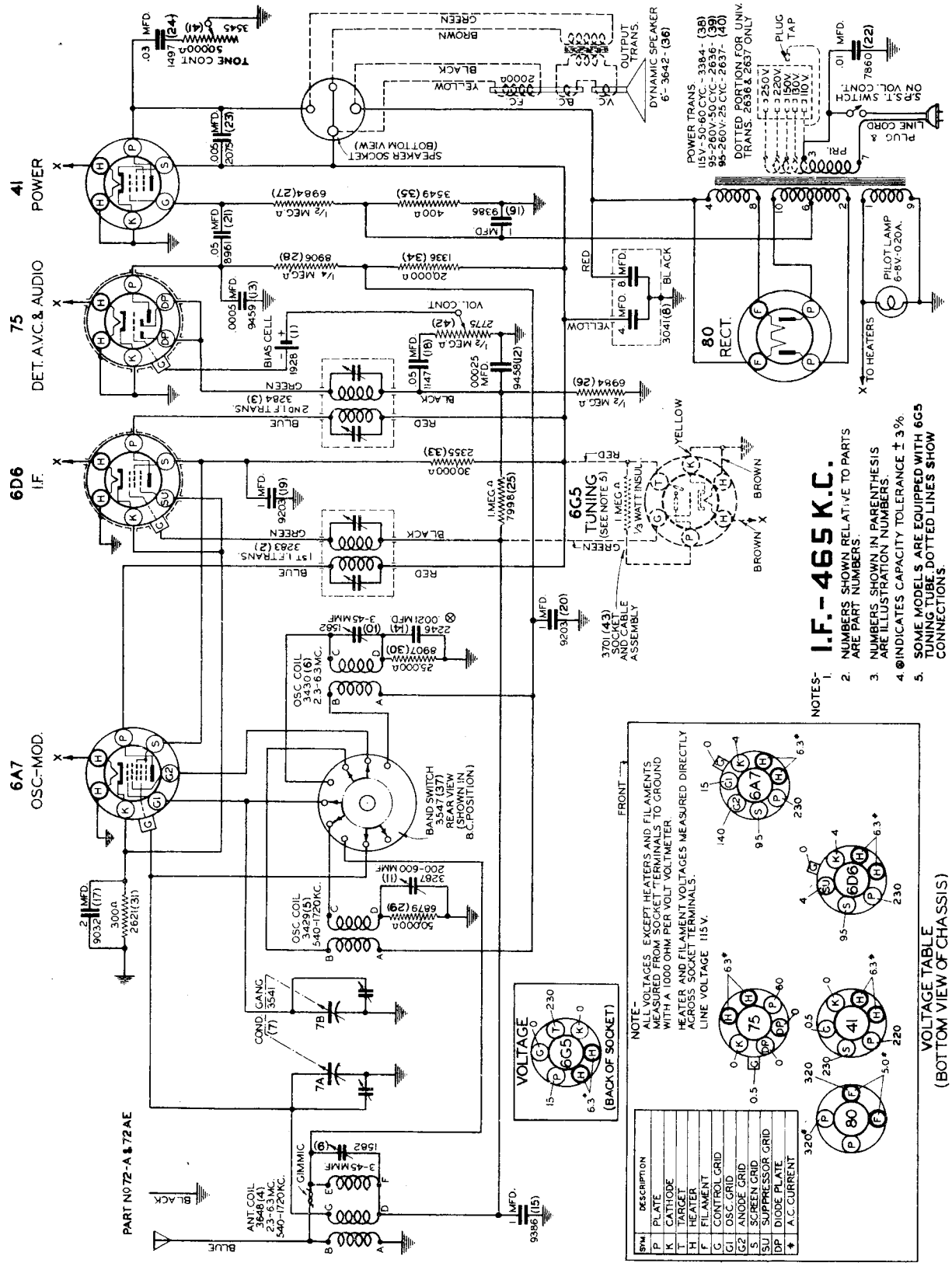

©John F. Rider, Publisher

MODEL A9741
Chassis 72A
Socket,Layout,Trimmers
Alignment

ALLIED RADIO CORP.

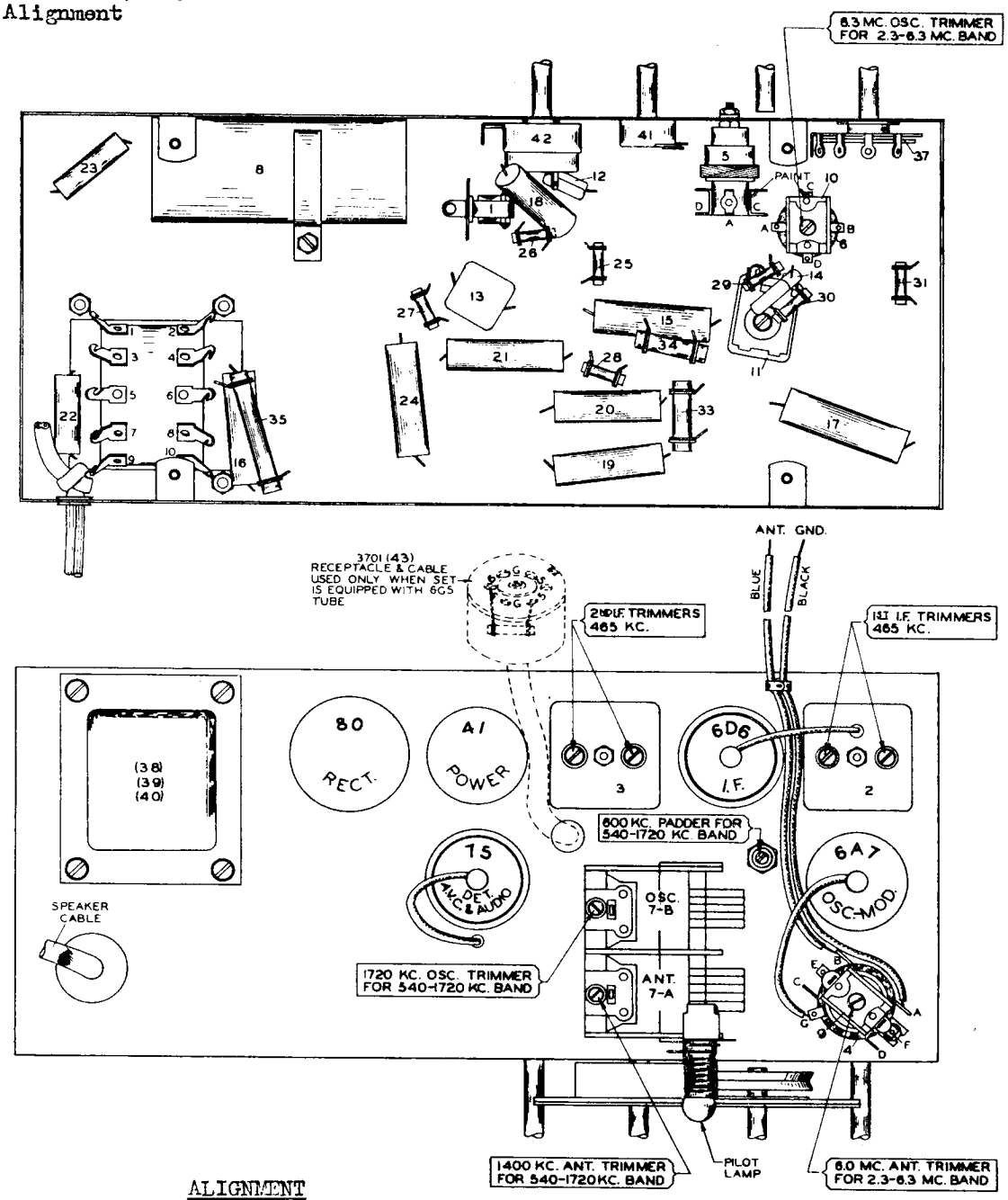

Some of these models are equipped with a 6G5 Cathode ray visual tuning indicator tube. The parts and connections shown in dotted lines on the circuit and parts layout diagrams are used only when the 6G5 tube is incorporated in the receiver.

REPEAT ALL ADJUSTMENTS SEVERAL TIMES-USING LOWEST POSSIBLE TEST OSCILLATOR OUTPUT.

ALIGNMENT

I.F.--CONNECT TEST OSCILLATOR TO 6A7 GRID CAP THROUGH a.02Mfd COND.(DO NOT REMOVE THE GRID CLIP)AND CHASSIS GROUND. TURN VOL.CONT.TO FULL ON. PEAK 2nd and 1st I.F. TRANS. TRIMMERS TO MAX.AT 465 K.C.

R.F.--CONNECT TEST OSCILLATOR TO RECEIVER ANT.THROUGH A .00025Mfd COND AND TO CHASSIS

B.C. 1720 TO 540 KC BAND — GROUND. TURN GANG CONDENSER TO FULLY CLOSED POSITION-DIAL POINTER SHOULD BE AT LAST LINE AT LOW-FREQ. END OF DIAL CALIBRATION(SHIFT POINTER IF NECESSARY). SET REC. DIAL & TEST OSC. FREQ. TO 1720 K.C.-ADJUST OSC. H.F. TRIMMER TO MAXIMUM PEAK(TRIMMER IS ON TOP OF REAR SECTION OF GANG COND.). SHIFT REC.DIAL & TEST OSC. TO 1400 K.C.--ADJUST ANT. TRIMMER TO MAX.(FRONT SECT. OF GANG COND.). SHIFT TO 600 K.C.**ADJUST OSC. PADDER(THROUGH HOLE IN TOP OF CHASSIS NEXT TO GANG COND.)TO MAX. PEAK WHILE ROCKING TUNING COND.

R.F.-- S.W. 2.3 to 6.3 MC — SUBSTITUTE 400 ohm RES. FOR .00025Mfd COND. ABOVE. SET BAND-SELECTOR SWITCH TO S.W. POSITION--TUNE REC.DIAL & TEST OSC. TO 6.3 MEGACYCLES--ADJUST THE 6.3 MC TRIMMER (OSCILLATOR H.F.)TO MAXIMUM PEAK. SHIFT REC.DIAL & TEST OSC. TO THE 6.0 MC POSITION--ADJUST THE 6.0 MC ANTENNA TRIMMER TO MAXIMUM PEAK .

©John F. Rider, Publisher

Chassis 46A
Schematic, Trimmers, Voltage

ALLIED RADIO CORP.

MODELS A9752, A9753, A9754
A9755

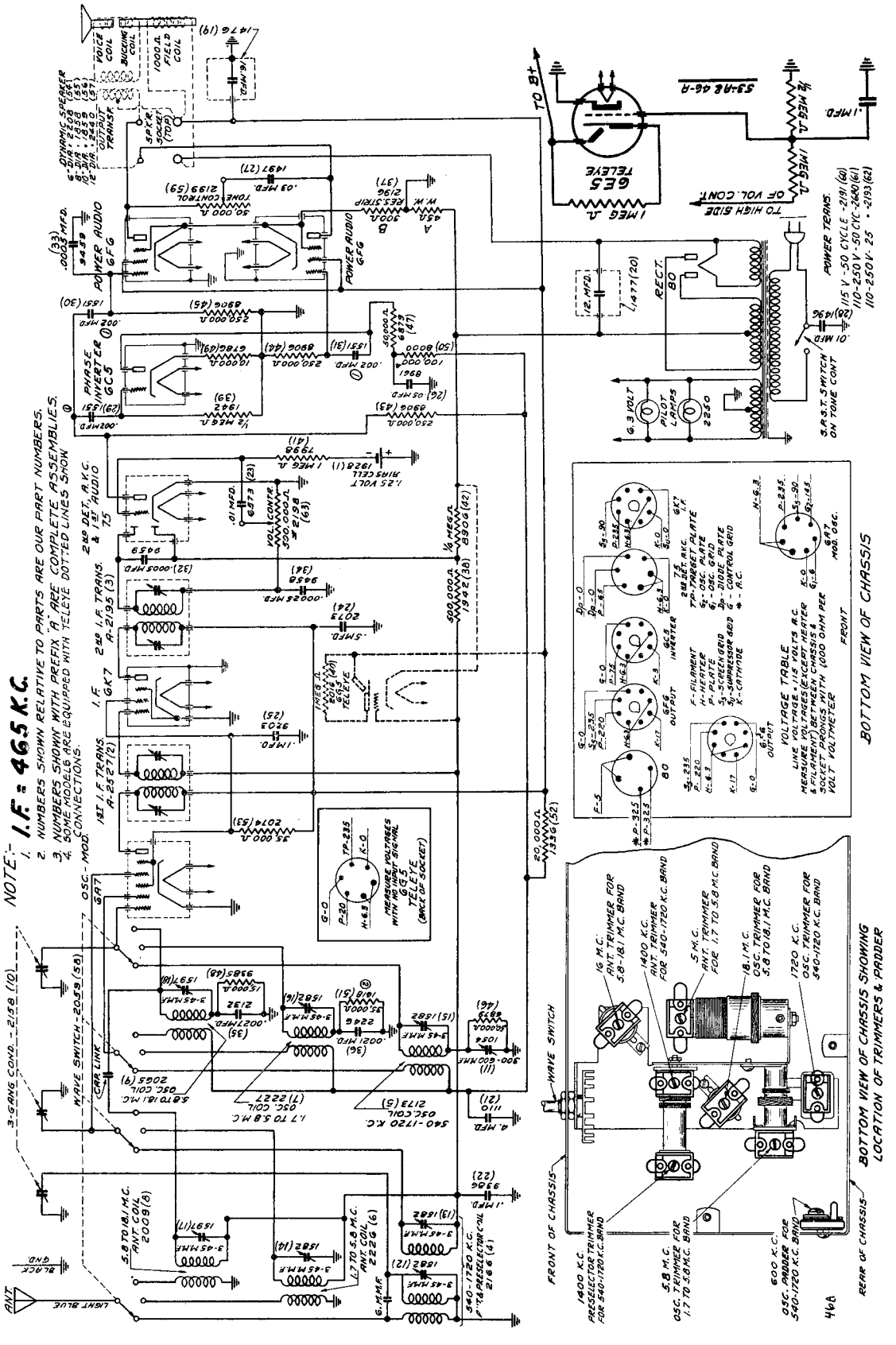

©John F. Rider, Publisher

MODELS A9752, A9753, A9754
A9755
Chassis 46A
Socket, Layout, Coils, Notes

ALLIED RADIO CORP.

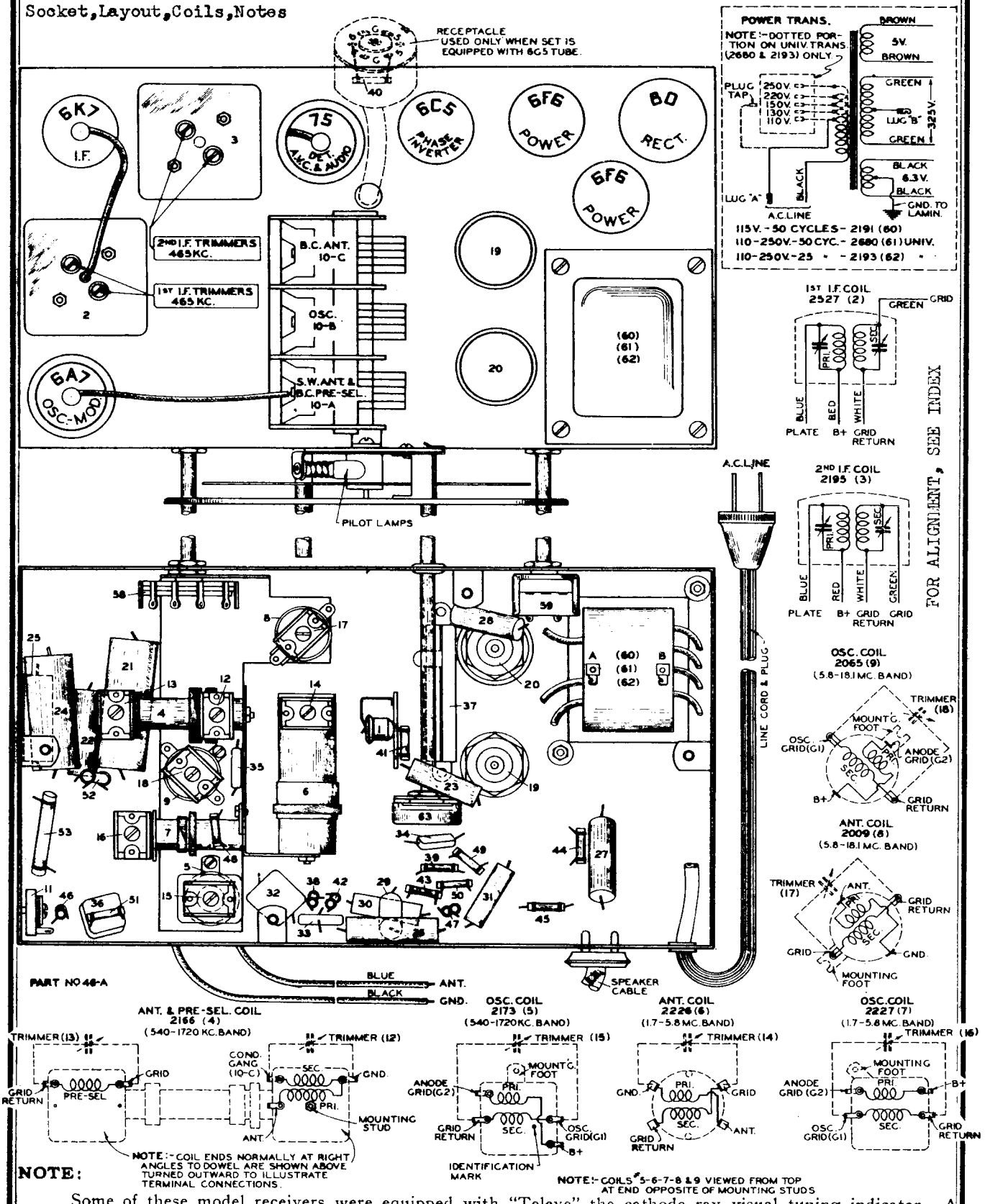

NOTE: NOTE:- COIL ENDS NORMALLY AT RIGHT ANGLES TO DOWEL ARE SHOWN ABOVE TURNED OUTWARD TO ILLUSTRATE TERMINAL CONNECTIONS.

NOTE:- COILS 5-6-7-8 & 9 VIEWED FROM TOP AT END OPPOSITE OF MOUNTING STUDS.

Some of these model receivers were equipped with "Teleye" the cathode ray visual tuning indicator. A 6E5 tube was used in early production models, which was replaced by a 6G5 tube in later production. The parts and connections shown in the dotted lines on the complete circuit diagram are used only when a 6G5 "Teleye" tube is incorporated in the receiver. The **schem. diag.** shows 6E5 tube connections.

©John F. Rider, Publisher

Schematic, Trimmers
Voltage

ALLIED RADIO CORP.

MODELS A9768, A9769, A9770
Chassis 68B, 68BE

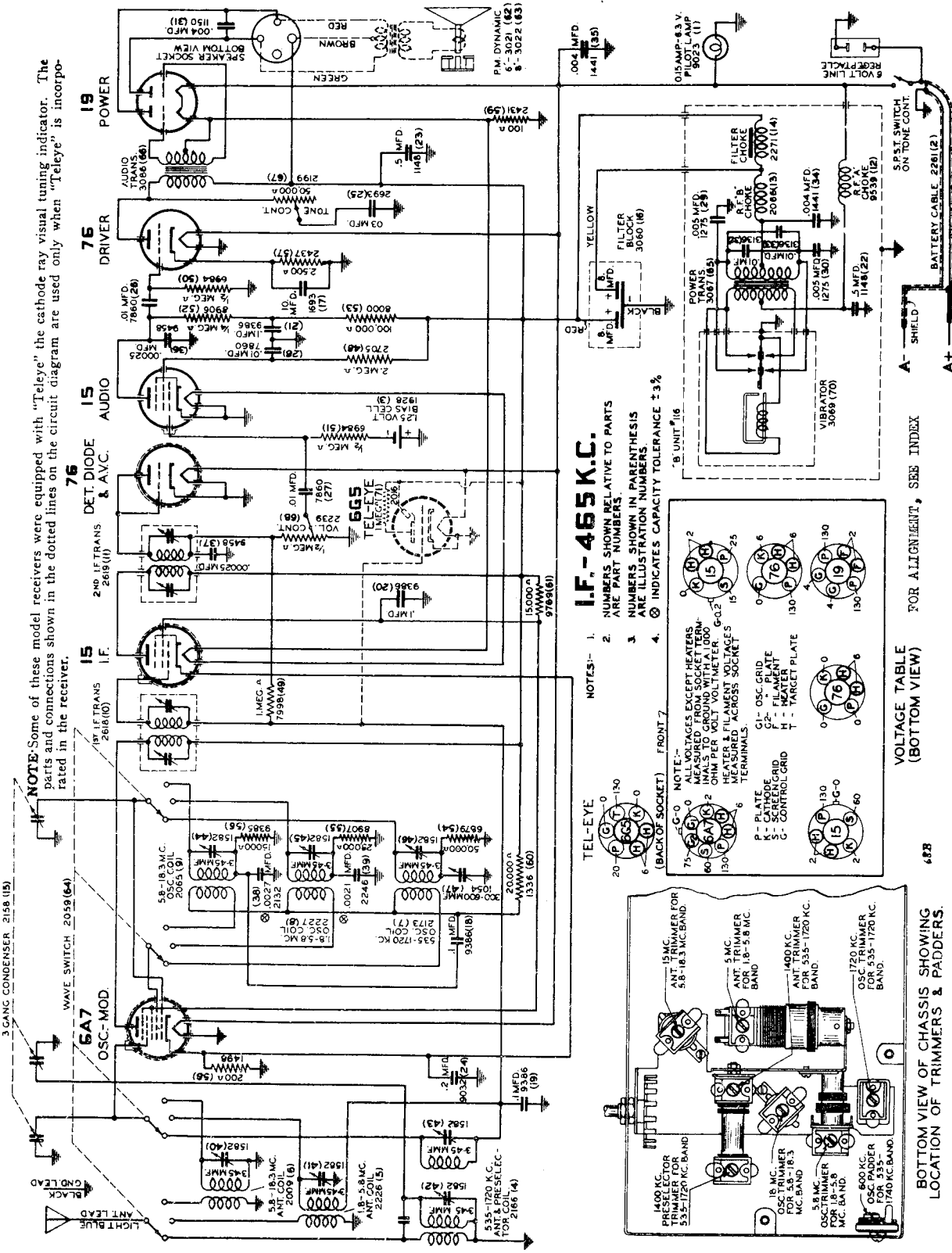

©John F. Rider, Publisher

MODELS A9768, A9769, A9770
Chassis 68B, 68BE
Socket, Layout, Coils
Trimmers

ALLIED RADIO CORP.

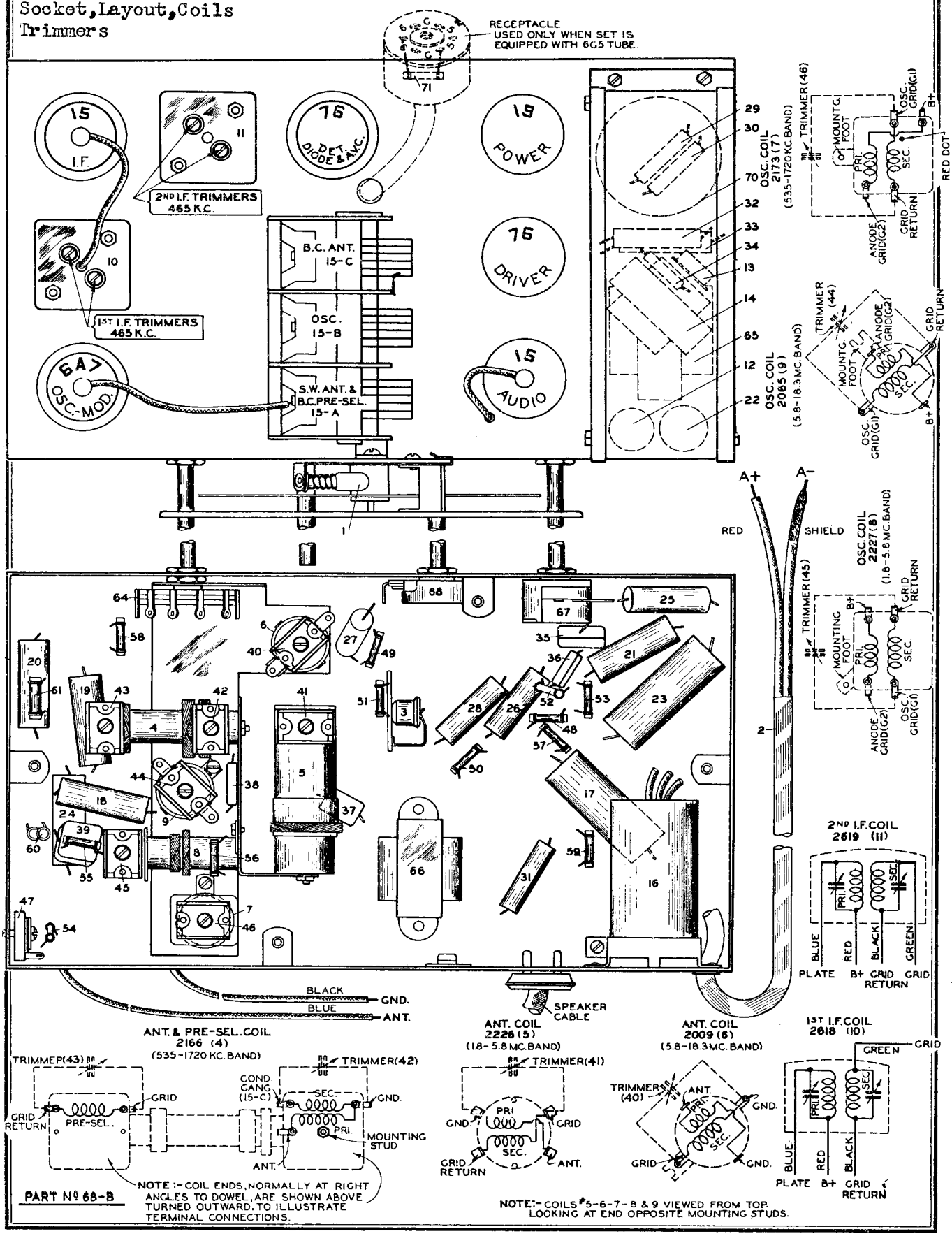

©John F. Rider, Publisher

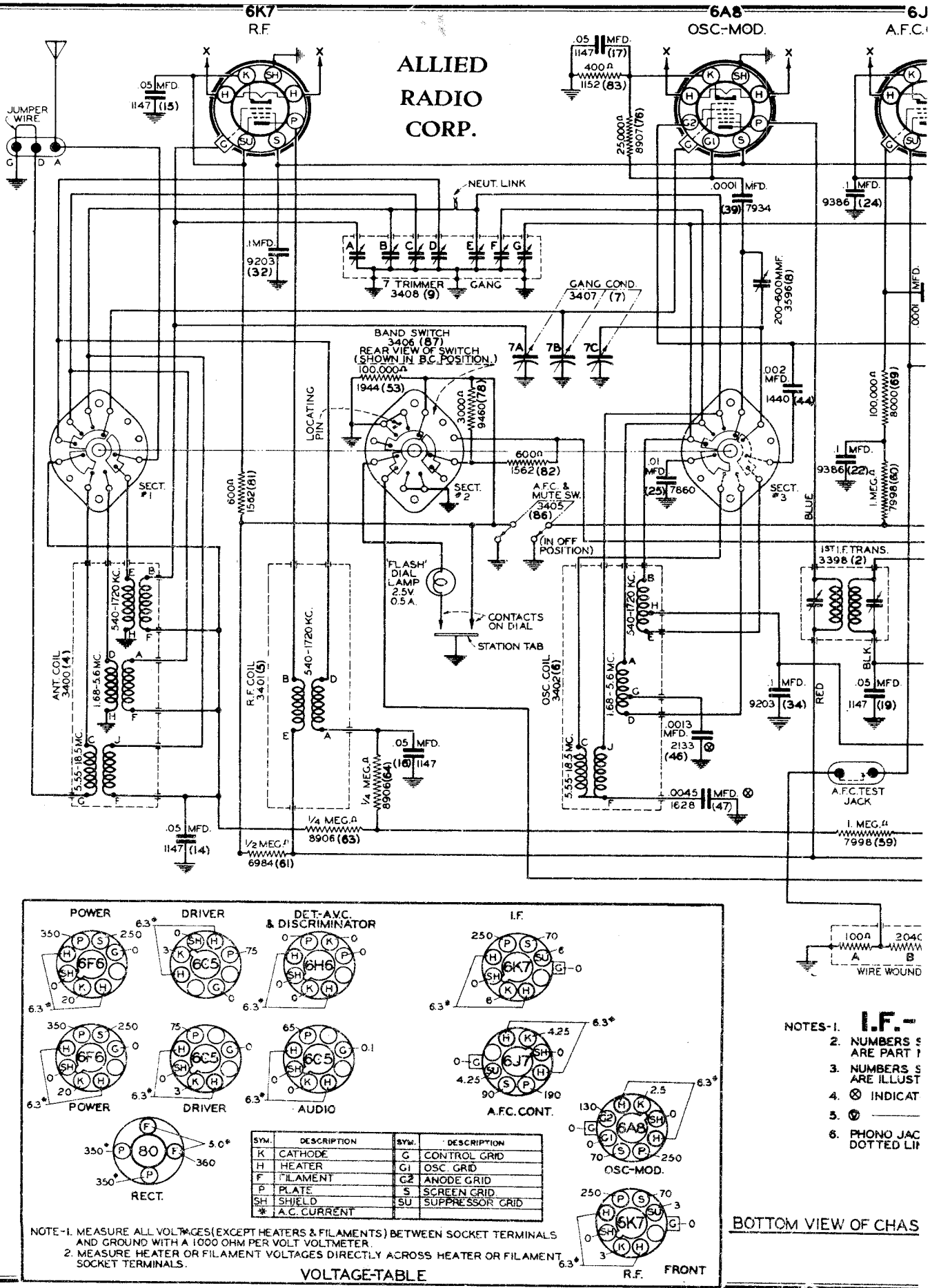

©John F. Rider, Publisher

MODELS A9757, A9758
Chassis 76A
Schematic, Voltage

7 CONT. | 6K7 I.F. | 6H6 DET-A.V.C. & DISCRIMINATOR | 6C5 AUDIO | 6C5 DRIVER | 6F6 POWER

6C5 DRIVER

6F6 POWER

465 K.C.

SHOWN RELATIVE TO PARTS NUMBERS.

SHOWN IN PARENTHESIS RATION NUMBERS.

ES CAPACITY TOLERANCE ± 3%.

± 10%

K AND SWITCH ARE SPECIAL. IES SHOW CONNECTIONS.

SIS

PART Nº 76-A

ALLIED RADIO CORP.

MODELS A9757, A9758
Chassis 76A
Socket, Trimmers
Layout

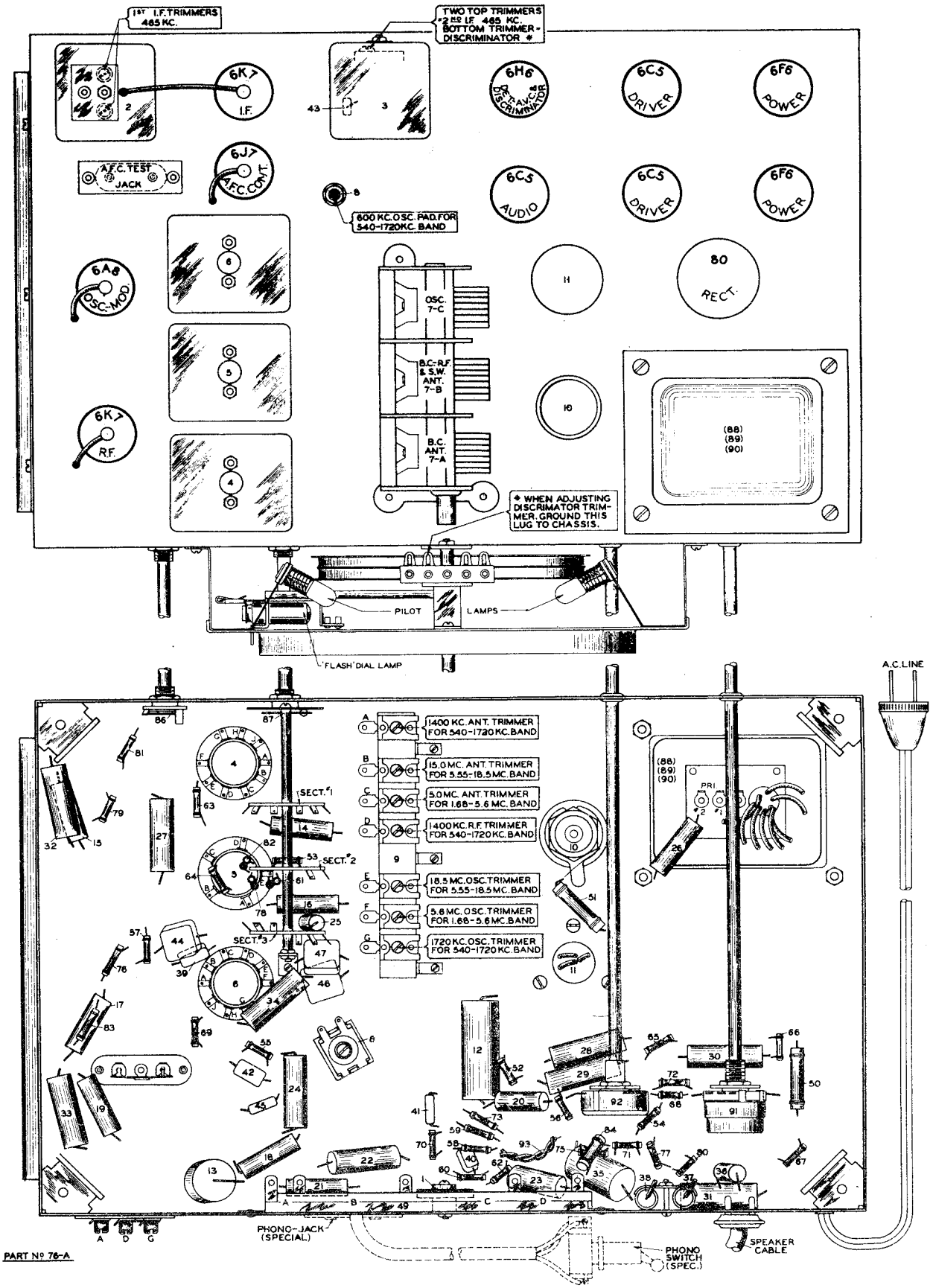

©John F. Rider, Publisher

MODELS A9757, A9758
Chassis 76A
Alignment, Tuner

ALLIED RADIO CORP.

ALIGNMENT PROCEDURE: No. 76A

SHOULD REALIGNMENT BE NECESSARY, THERE ARE SEVERAL PRECAUTIONS THAT MUST BE CAREFULLY OBSERVED, THESE ARE:

1. Do not align set until it has reached normal operating temperature. Place the receiver in operation at least 15 minutes before attempting to realign the set.
2. The importance of using the proper type of test equipment and FOLLOWING THE ALIGNMENT PROCEDURE EXACTLY AS GIVEN CANNOT BE TOO STRONGLY EMPHASIZED—failure to do so will result in low sensitivity, poor selectivity, incorrect dial calibration, distortion and unsatisfactory operation of the automatic frequency control.
3. It is absolutely necessary that an accurately calibrated test oscillator with some type of output measuring device and a double scale milliammeter—0 to 1 M. A. and 0 to 5 M.A. be used.
4. To assure most accurate adjustment always carefully repeat all adjustments several times.
5. Once the alignment of the receiver has been completed, do not change the oscillator control tube, particularly with one of a different make.

ALIGNING I.F. STAGE AT 465 KILOCYCLES:

(a) Place automatic frequency control in the maximum left hand A.F.C. "off" position.

(b) Attach the ground lead of the test oscillator to the chassis. Connect the other lead to the grid cap of the 6A8 tube through a .02 Mfd. series condenser. DO NOT REMOVE GRID CLIP.

(c) Set test oscillator to EXACTLY 465 kilocycles and turn volume control on full.

(d) Remove shields held in position by snap fasteners over A.F.C. test jack and over trimmer screw holes in the first and second I.F. transformer shield cans.

(e) Peak second I.F. transformer trimmers for maximum 465 kilocycle output by adjusting the two trimmers accessible through the two top holes in the second I.F. transformer shield can. DO NOT TOUCH DISCRIMINATOR (BOTTOM) SCREW.

(f) Peak each of the first I.F. transformer trimmers for maximum 465 kilocycle signal output.

ALIGNING 1720-540 KILOCYCLE BAND:

(a) Check tuning dial adjustment by turning gang condenser until plates touch maximum capacity stop (completely in mesh), at which point the dial needle must be exactly even with the last line at the low frequency end of the dial calibration. If the dial needle does not point exactly to the last line, move needle to correct position.

(b) Remove test oscillator lead from grid of 6A8 tube and connect to receiver "A" antenna post through a .00025 Mfd. condenser.

(c) Adjust A.F.C. control to maximum left hand A.F.C. "off" position and band selector switch for operation on the 1720-540 kilocycle band.

(d) Set test oscillator frequency and receiver dial to EXACTLY 1720 kilocycles, and BRING IN 1720 KILOCYCLE TEST OSCILLATOR SIGNAL TO MAXIMUM OUTPUT BY ADJUSTING 1720 KILOCYCLE OSCILLATOR TRIMMER.

(e) Tune receiver dial and set test oscillator frequency to EXACTLY 1400 kilocycles. Adjust 1400 K.C. R.F. and antenna trimmers for maximum sensitivity.

(f) Set test oscillator frequency and receiver dial to approximately 600 kilocycles. Then while rocking gang condenser slightly to right and left, adjust 600 K.C. oscillator padder for maximum signal response.

ALIGNING DISCRIMINATOR CIRCUIT:

(a) After completing 1720-540 kilocycle adjustment, set test oscillator to EXACTLY 465 KILOCYCLES and connect to grid of 6A8 tube through a .02 Mfd. Condenser—insert lead of double scale 0 to 1 and 0 to 5 milliammeter into A.F.C. test jack located on top of chassis adjacent to the 6L7 tube. To avoid possibility of damaging the meter should one of the milliammeter leads short to the metal chassis, ALWAYS TURN OFF RECEIVER WHEN INSERTING OR REMOVING MILLIAMMETER LEADS FROM A.F.C. TEST JACK.

(b) Short out A.F.C. mute switch by grounding the second from the left (looking at the front of the chassis) of the four lugs mounted on top of the dial assembly. The proper lug to ground is indicated in the "Note X" on chassis top parts view.

(c) Turn receiver on, place A.F.C. switch knob in A.F.C. "on" position and if meter needle jumps off scale adjust output of test oscillator until an approximate 2 M.A. deflection is obtained on the 0 to 5 milliammeter scale.

(d) Place band selector switch for operation on 1720-540 K.C. broadcast band—and set receiver dial somewhere near 1000 kilocycles at a point where no station is heard.

(e) Rotate A.F.C. switch knob from A.F.C. "on" to A.F.C. "off" position and note whether the milliammeter reading changes as the position of the A.F.C. switch is changed. No change in reading indicates probable proper discriminator trimmer adjustment, while a noticeable change indicates improper discriminator trimmer adjustment.

(f) IMPORTANT: DO NOT ADJUST DISCRIMINATOR TRIMMER UNLESS IT IS ABSOLUTELY NECESSARY. Place A.F.C. switch in A.F.C. "off" position and note milliammeter reading, then place A.F.C. switch in A.F.C. "on" position and CAREFULLY ADJUST DISCRIMINATOR TRIMMER UNTIL MILLIAMMETER READING IS EXACTLY THE SAME AS IT WAS WITH THE A.F.C. SWITCH IN THE "OFF" POSITION.

NOTE: As the discriminator trimmer screw is screwed in (increasing capacity) the milliammeter reading should decrease and as the discriminator trimmer is unscrewed (decreasing capacity) the milliammeter reading should increase. IF WHEN ADJUSTING THE DISCRIMINATOR TRIMMER THE MILLIAMMETER READING DOES NOT SHARPLY INCREASE OR DECREASE AS THE TRIMMER IS ADJUSTED EVEN AFTER SEVERAL TURNS OF THE TRIMMER SCREW, THIS DOES NOT INDICATE PROPER BALANCING BUT DOES INDICATE INCORRECT ADJUSTMENT AND THE DISCRIMINATOR TRIMMER SHOULD BE SET TO ABOUT ½ CAPACITY AND THE ADJUSTMENT OF THE DISCRIMINATOR TRIMMER MADE ALL OVER AGAIN.

ALIGNING 1.68-5.6 MEGACYCLE BAND:

(a) Replace .00025 Mfd. test oscillator antenna lead series condenser with a 400 ohm resistor.

(b) Adjust band selector switch to 1.68-5.6 megacycles, tune receiver dial and set test oscillator frequency to EXACTLY 5.6 megacycles. Bring in 5.6 megacycle test signal to maximum output by adjusting 5.6 M. C. oscillator trimmer.

(c) Tune receiver dial and test oscillator frequency to EXACTLY 5 Megacycles and adjust 5 M.C. antenna trimmer for maximum sensitivity.

ALIGNING 5.55-18.5 MEGACYCLE BAND:

(a) Leave 400 ohm resistor in series with test oscillator lead and place band selector switch for operation on 5.55-18.5 megacycle band, tune receiver dial and set test oscillator frequency to EXACTLY 18.5 megacycles.

(b) Adjust 18.5 M.C. oscillator trimmer to bring in 18.5 megacycle test signal to maximum output.

NOTE: When adjusting this trimmer two peaks, the fundamental and the image peak will be noticed. CARE MUST BE TAKEN THAT THE FUNDAMENTAL PEAK AND NOT THE IMAGE PEAK IS USED FOR ALIGNING THE RECEIVER AT 18.5 MEGACYCLES. Always back off the trimmer to minimum capacity, then screw down the trimmer (add capacity) until the FIRST peak which is the fundamental and the proper one to use is tuned in. If the trimmer is screwed down beyond the point where the first peak is received the incorrect image peak will be tuned in. After completing adjustment of the oscillator trimmer at 18.5 megacycles, always check to see if the proper peak has been used. To do this leave test oscillator frequency at 18.5 megacycles, increase the output of the test oscillator and tune receiver dial to approximately 17.5 megacycles. Then vary the receiver dial slightly to the right and left of 17.5 megacycles, and if the fundamental peak was used in aligning at 18.5 megacycles the test oscillator signal will be heard at approximately 17.5 megacycles on the receiver dial.

(c) Tune receiver dial and set test oscillator frequency to EXACTLY 15 megacycles.

(c) Rock gang condenser slightly to right and left and adjust 15 M.C. antenna trimmer for maximum 15 megacycle test signal response.

To assure more accurate trimmer setting, repeat all above adjustments several times always using lowest possible test oscillator output consistent with readable output meter scale deflection.

"Automatic-Flash" tuning

1. Lay station call letter tab sheet on flat surface and with a razor or sharp knife cut out desired tabs by cutting around the black edges of each required station tab.

2. Unscrew the two knurled head screws mounted on front of the glass frame and then holding onto the screws pull dial glass away from the cabinet.

3. To illustrate the proper setting and installation of the metal holder and station call letter tabs, the receiver is shipped from the factory with a tab properly set for Station WGN, 720 kilocycles. Carefully study the way the call letter tab and celluloid envelope is inserted in the metal holder, and if WGN is not one of the selected stations, remove WGN celluloid envelope and call letter tab by sliding the celluloid envelope out through the top of the metal holder. See "B" in diagram.

4. Turn Automatic Frequency and Inter-Station Noise Silencer Control to maximum left hand position.

5. As it is desirable to begin setting metal tab holders at the low frequency end of the broadcast band (540 kilocycles) carefully tune in the selected station which broadcasts on the lowest frequency—least number of kilocycles.

6. By using the metal holder tool (see "A" in diagram) or by grasping with the finger tips, carefully slide the metal holder which is closest to the low frequency end of the broadcast band (540 kilocycles) . . . along the metal rail to which the 12 metal holders are clipped . . . until a narrow light appears directly below the metal tab holder being adjusted.

7. Place paper tab having call letters and frequency of station tuned in inside of celluloid envelope . . . insert the celluloid envelope with curved end to the rear . . . into the top of the metal holder (see "A" in diagram) . . . and push the envelope down until the curved end of the celluloid envelope fits into the curved top of the metal holder.

8. Turn Automatic Frequency and Inter-Station Silencer Control to the maximum right hand "Automatic-Flash" position. Slowly tune slightly to the right and left of the station tuned in and if the metal tab holder is properly set, the white figures of the call letter tab will be illuminated at approximately the same instant the station is heard. IF THE CALL LETTER TAB IS ILLUMINATED AND THE STATION IS NOT HEARD, OR IF THE SIGNAL IS DISTORTED, THE METAL TAB HOLDER IS INCORRECTLY SET AND IT WILL BE NECESSARY TO MOVE THE METAL TAB HOLDER TO THE CORRECT POSITION. See paragraphs 5 and 6 for proper procedure.

9. After metal holder is properly adjusted for the selected station operating on the lowest frequency, set a station call letter metal tab holder for the station operating on the next lowest frequency, continuing on in this way until a tab holder is set for all the selected stations.

After the call letter tab metal holders are adjusted so that when the station is tuned in with greatest clarity the light in back of the call letter tab illuminates the tab, the adjustment of the tabs is completed and thereafter will require no attention except when moved from their position by tampering or when an additional station tab is included which would disturb the position of the other tabs.

NOTE: A distorted signal and motorboating sound that is heard just as the station tab is illuminated and only when the A.F.C. switch is in the A.F.C. "on" position is generally caused by the mute switch contact not making good contact to the metal tab holder due to:

(a) Dirt or corrosion on contact surface of tab holder or rail.

(b) The rail to which the metal tab holders are clipped may be sprung forward preventing contact between the mute switch and the metal tab holder.

To determine whether the cause is due to poor contact, press slightly inward near the middle of the rail, and if the motorboating sound is eliminated and the signal is heard with normal clarity, it is a positive indication that the rail will have to be bent in slightly or—the contact surface of the metal holder is dirty or—the mute switch tension spring is bent back or has lost its resiliency.

If the rail requires adjustment place thumbs near the upper right and left ends of the rail and press slightly inward until proper contact is made to all metal holders. While the rail will naturally come forward slightly after pressure is released, do not attempt to force the rail inward with too much pressure at one time. Several adjustments are better than extreme force which would cause the opaque screen to break.

If the metal tab holders move as the tuning lever is rotated, the tabs have probably been sprung, which can be corrected by removing them from the rail and slightly squeezing the tab with a pair of long nosed pliers so as to decrease the clearance between the rear contact portion of the metal tab and the front portion.

©John F. Rider, Publisher

Dial Assembly, Parts Data

ALLIED RADIO CORP.

MODELS A9757, A9758
Chassis 76A

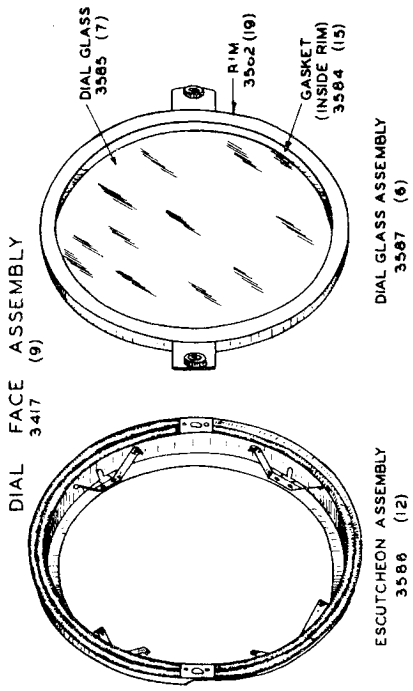

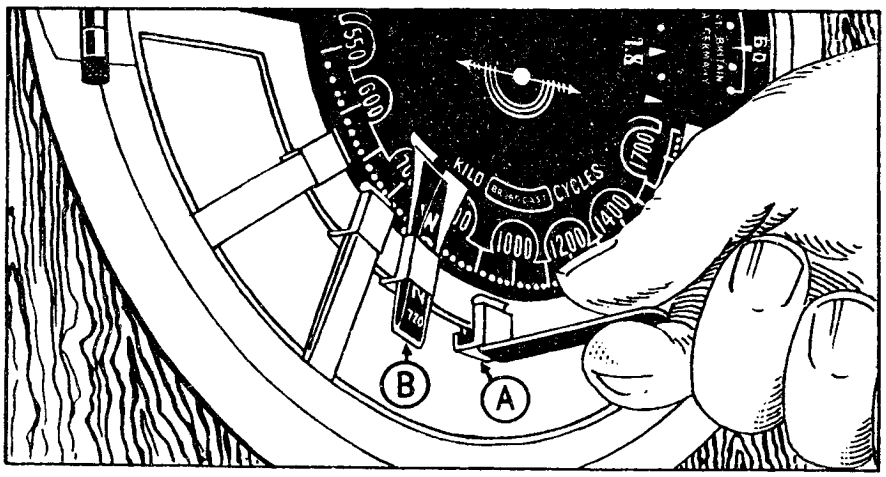

Above Diagram shows method of inserting and setting tabs.

PROCEDURE FOR REMOVING RECEIVER FROM CABINET.

1. Unscrew the two knurled head screws mounted on front of the glass frame and then holding onto the screws pull dial glass away from the cabinet.
2. Swing 'rapid tuning' lever to center position as shown, **loosen** (do not remove) **screw thru hole in bottom center,** and remove lever knob.
3. Loosen set screws on all five tuning knobs, and remove knobs from shafts. (Not shown in sketch).
4. Remove four bolts at bottom side of chassis mtg. shelf (not shown in sketch.)
5. Remove wood screws on the pressure brackets at rear of chassis (not shown in sketch) and then slide receiver out of cabinet.
6. When replacing receiver in cabinet, reverse entire procedure given above.

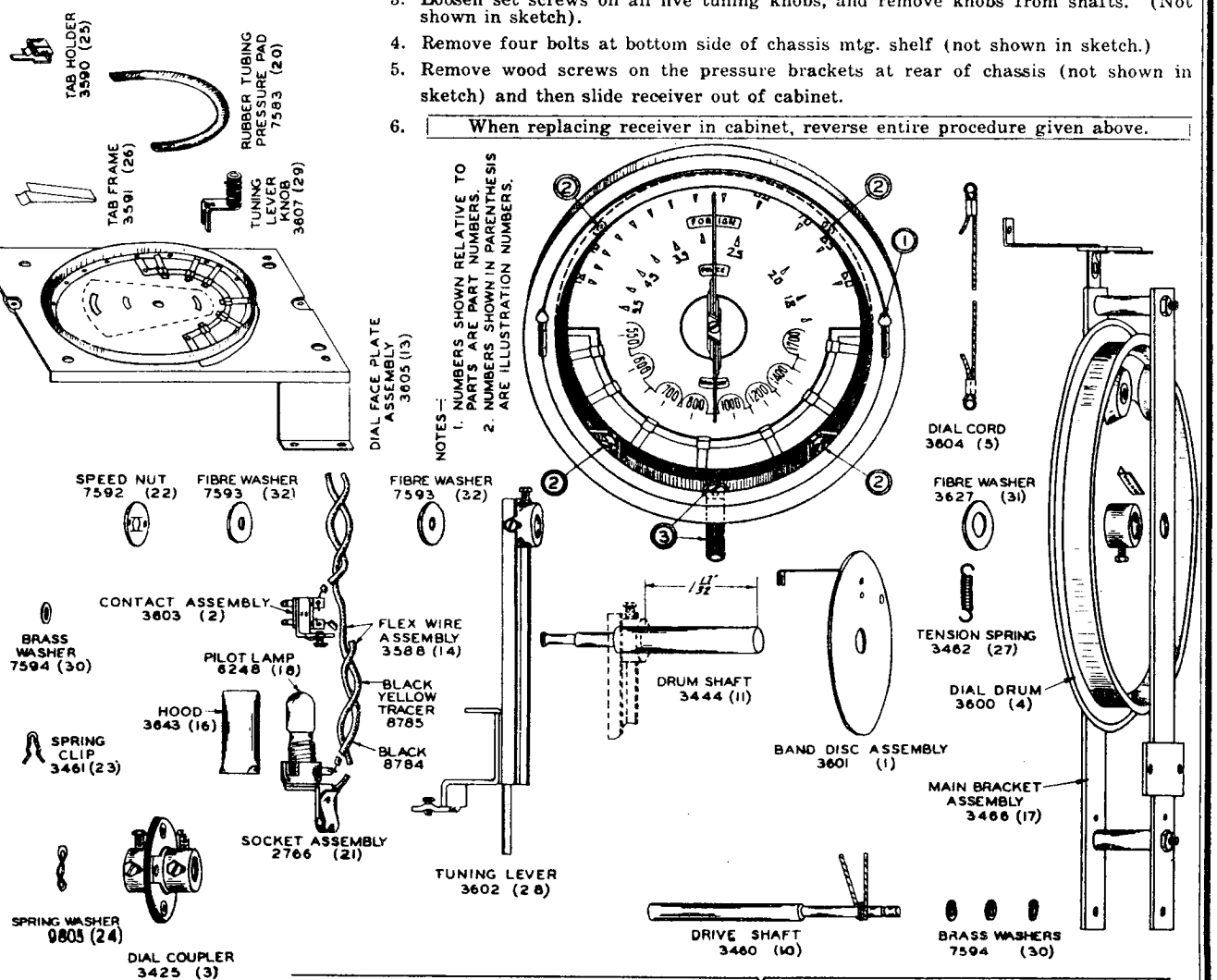

DIAL MECHANISM ASSEMBLY 3416 (8)

©John F. Rider, Publisher

MODELS A9757, A9758
Chassis 76A
Parts

ALLIED RADIO CORP.

PARTS LIST

Illus. No.	Part No.	Part Name	Description	List Price
1	3557	Choke	R. F. "B"	$ .33
2	3398	Coil	First I.F. Transformer	1.50
3	*3399	Coil	Second I.F. Transformer	2.75
4	3400	Coil	Antenna	2.10
5	3401	Coil	R. F.	1.10
6	3402	Coil	Oscillator	1.76
7	3407	Condenser	Three Gang Tuning	3.90
8	3596	Condenser	Padding	.44
9	3408	Condenser	Trimmer	.95
10	3167	Condenser	Wet Electrolytic (25 Mfd.)	1.25
11	3041	Condenser	Dry Electrolytic (1-8 & 1-4 Mfd.)	1.35
12	1693	Condenser	Dry Electrolytic (10 Mfd.)	.75
13	1110	Condenser	Dry Electrolytic (4 Mfd.)	1.14
14	1147	Condenser	Tubular .05 Mfd. 200 Volt	.19
15	1147	Condenser	Tubular .05 Mfd. 200 Volt	.19
16	1147	Condenser	Tubular .05 Mfd. 200 Volt	.19
17	1147	Condenser	Tubular .05 Mfd. 200 Volt	.19
18	1147	Condenser	Tubular .05 Mfd. 200 Volt	.19
19	1147	Condenser	Tubular .05 Mfd. 200 Volt	.19
20	1147	Condenser	Tubular .05 Mfd. 200 Volt	.19
21	1147	Condenser	Tubular .05 Mfd. 200 Volt	.19
22	9386	Condenser	Tubular .1 Mfd. 200 Volt	.19
23	9386	Condenser	Tubular .1 Mfd. 200 Volt	.19
24	9386	Condenser	Tubular .1 Mfd. 200 Volt	.19
25	7860	Condenser	Tubular .01 Mfd. 400 Volt	.19
26	7860	Condenser	Tubular .01 Mfd. 400 Volt	.19
27	8961	Condenser	Tubular .05 Mfd. 400 Volt	.19
28	8961	Condenser	Tubular .05 Mfd. 400 Volt	.19
29	8961	Condenser	Tubular .05 Mfd. 400 Volt	.19
30	8961	Condenser	Tubular .05 Mfd. 400 Volt	.19
31	8961	Condenser	Tubular .05 Mfd. 400 Volt	.19
32	9203	Condenser	Tubular .1 Mfd. 400 Volt	.20
33	9203	Condenser	Tubular .1 Mfd. 400 Volt	.20
34	9203	Condenser	Tubular .1 Mfd. 400 Volt	.20
35	3164	Condenser	Tubular .25 Mfd. 400 Volt	.26
36	1551	Condenser	Tubular .002 Mfd. 600 Volt	.18
37	3536	Condenser	Shielded Tubular .007 Mfd. 200 Volt	.30
38	3537	Condenser	Shielded Tubular .005 Mfd. 200 Volt	.30
39	7934	Condenser	Mica .0001 Mfd.	.21
40	7934	Condenser	Mica .0001 Mfd.	.21
41	7934	Condenser	Mica .0001 Mfd.	.21
42	7934	Condenser	Mica .0001 Mfd.	.21
43	7934	Condenser	Mica .0001 Mfd.	.21
44	1440	Condenser	Mica .002 Mfd.	.21
45	3539	Condenser	Mica .000015 Mfd. Blue Dot	.27
46	2133	Condenser	Mica .0013 Mfd. Yellow Dot	.21

Note—* No. 3399 (3) Second I.F. Transformer replaced in late production with No. 3738 2nd I.F. Transformer.
Note—** No. 1152 (83) 400 Ohm Resistor replaced in late production with No. 6875 400 Ohm Resistor.

Illus. No.	Part No.	Part Name	Description	List Price
47	1628	Condenser	Mica .0045 Mfd. Yellow Dot	.21
49	3392	Resistor	Wire Wound	1.15
50	3413	Resistor	Moulded Wire 400 Ohm 1½ Watt	.20
51	3414	Resistor	Moulded Wire 25 Ohm 1½ Watt	.20
52	1942	Resistor	Carbon ½ Meg Ohm 1/3 Watt Ins.	.19
53	1944	Resistor	Carbon 100,000 Ohm 1/3 Watt Ins.	.19
54	1944	Resistor	Carbon 100,000 Ohm 1/3 Watt Ins.	.19
55	1977	Resistor	Carbon 50,000 Ohm 1/3 Watt Ins.	.19
56	1977	Resistor	Carbon 50,000 Ohm 1/3 Watt Ins.	.19
57	3410	Resistor	Carbon 10,000 Ohm 1/3 Watt Ins.	.19
58	3610	Resistor	Carbon 400,000 Ohm 1/3 Watt Ins.	.19
59	7998	Resistor	Carbon 1 Meg Ohm 1/3 Watt	.19
60	7998	Resistor	Carbon 1 Meg Ohm 1/3 Watt	.19
61	6984	Resistor	Carbon ½ Meg Ohm 1/3 Watt	.19
62	6984	Resistor	Carbon ½ Meg Ohm 1/3 Watt	.19
63	8906	Resistor	Carbon ¼ Meg Ohm 1/3 Watt	.19
64	8906	Resistor	Carbon ¼ Meg Ohm 1/3 Watt	.19
65	8906	Resistor	Carbon ¼ Meg Ohm 1/3 Watt	.19
66	8906	Resistor	Carbon ¼ Meg Ohm 1/3 Watt	.19
67	8906	Resistor	Carbon ¼ Meg Ohm 1/3 Watt	.19
68	2155	Resistor	Carbon 200,000 Ohm 1/3 Watt	.19
69	8000	Resistor	Carbon 100,000 Ohm 1/3 Watt	.19
70	8000	Resistor	Carbon 100,000 Ohm 1/3 Watt	.19
71	8000	Resistor	Carbon 100,000 Ohm 1/3 Watt	.19
72	3534	Resistor	Carbon 75,000 Ohm 1/3 Watt	.19
73	6879	Resistor	Carbon 50,000 Ohm 1/3 Watt	.19
75	6879	Resistor	Carbon 50,000 Ohm 1/3 Watt	.19
76	8907	Resistor	Carbon 25,000 Ohm 1/3 Watt	.19
77	8907	Resistor	Carbon 25,000 Ohm 1/3 Watt	.19
78	9460	Resistor	Carbon 3,000 Ohm 1/3 Watt	.19
79	7997	Resistor	Carbon 2,000 Ohm 1/3 Watt	.19
80	9706	Resistor	Carbon 1,500 Ohm 1/3 Watt	.19
81	1562	Resistor	Carbon 600 Ohm 1/3 Watt	.20
82	1562	Resistor	Carbon 600 Ohm 1/3 Watt	.20
83	**1152	Resistor	Carbon 400 Ohm 1/3 Watt	.26
84	3412	Resistor	Carbon 6,000 Ohm 1 Watt	.18
85	2730	Speaker	Dynamic (12")	11.00
86	3405	Switch	Automatic Frequency	
87	3406	Switch	Band Selector	.45
88	3394	Transformer	Power (115 Volt, 60 Cycle)	2.00
89	3395	Transformer	Power (95-260 Volt, 50 Cycle)	5.75
90	3396	Transformer	Power (95-260 Volt, 25 Cycle)	8.50
91	8004	Tone Control	Switch	11.00
92	3403	Volume Control		1.20
93	3662	Condenser	4 M.M.F. Capacity	1.00
	*3738	Coil	2nd I. F. Transformer	.10
				2.75

Illus. No.	Part No.	Part Name	Description	List Price
18	6248	Pilot Light	2.5 Volt .50 Ampere	.17
19	3582	Rim	For dial glass	.65
20	7583	Rubber Tubing	Tab Pressure Pad	.35
21	**3751	Socket Assembly	For "Flash" Pilot Light	.20
22	7592	Speed Nut		Hd. 2.25
23	3461	Spring Clip	For Drive Shaft	Hd. 7.50
24	9805	Spring Washer		Hd. 3.25
25	3590	Tab Holder	Metal Holder	.08
26	3591	Tab Frame	Celluloid Tab	.04
27	3462	Tension Spring	For Drive Cord	.07
28	3602	Tuning Lever	Shaft Assem.	.50
29	3607	Tuning Lever Knob	Rapid "Flash" Lever	.30
30	7594	Washers, Brass	For Thrust on Drive Shaft	Hd. .75
31	3627	Washer, Fibre	Spacer between band disc assembly and main bracket assembly	Hd. .75
32	7593	Washers, Fibre		Hd. .75

DIAL PARTS

Illus. No.	Part No.	Part Name	Description	List Price
200		Complete dial & drive assembly	Including dial glass and escutcheon	$12.75
1	3601	Band Disc Assembly	Wave Band Dial Indicator	.20
2	3603	Contact Asmbly	A. F. C. Double Contact Assembly	.40
3	3425	Dial Coupler	Flexible Rubber Assembly	.25
4	3600	Dial Drum	With Bushing and Set Screws	1.10
5	3604	Cord	With Eye Terminal	.20
6	3587	Dial Glass Assembly	Mounted in Rim	1.25
7	3585	Dial Glass	Less Rim	.45
8	3416	Dial Mechanism Assembly	Complete Assembly less escutcheon and Face Plate	4.00
9	3417	Dial Face Assembly	Complete assembly of rim, glass, gasket, escutcheon, dial scale and face plate assembly	7.75
10	3460	Drive Shaft		.20
11	3444	Drum Shaft		.35
12	3586	Escutcheon Assembly	Less glass and rim	2.00
13	3605	Face Plate Assembly	Less glass, rim and escutcheon	4.00
14	3588	Flexible Wire Assembly	Black and White with Yellow tracer wires	.06
15	3584	Gasket	Rubber for dial glass	.06
16	*3463	Hood	For "Flash" Pilot Light	.11
17	3466	Main Bracket Assembly	Bracket Assembly Only	1.15

NOT SHOWN IN ASSEMBLIES

Part No.	Part Name	Description	List Price
3593	Pointer	Dial Needle	.20
3592	Tab Tool	Inserting Tool	.05
	Tab Sheets	Call Letter Sheet No. 1 and No. 2 Net, Set	.25

Note * 3463 Appears as 3643 on dial part diagram.
Note ** 3751 Appears as 2766 on dial part diagram.

MISCELLANEOUS PARTS LIST

Part No.	Part Name	Description	List Price
3089	Arm	Wave Switch	.06
3663	Cover	Meter Jack	.06
3666	Cover	2nd I.F. Trimmer Shield	.04
3665	Cover	1st I.F. Trimmer Shield	.03
3612	Guide Bracket	Chassis Right Hand	.05
3613	Guide Bracket	Chassis Left Hand	.05
2534	Knob	Marked "Tuning"	.30
2444	Knob	Marked "Volume"	.30
2535	Knob	Marked "Tone—On-Off"	.30
2445	Knob	Marked "Band Selector"	.30
3422	Knob	Marked "A.F.C."	.30
3436	Link	Wire Connecting for Arm	.04
3393	Meter Jack		.30
2953	Strip	Antenna and Ground Post	.25
3667	Snap Fastener	For Meter Jack & I.F. Transformer Shields Net, Per Hd.	.30

Prices are subject to change without notice

©John F. Rider, Publisher

Chassis 60B
Schematic, Voltage, Socket
Trimmers, Layout

ALLIED RADIO CORP.

MODELS A9760, A9761, A9762
A9826, A9828

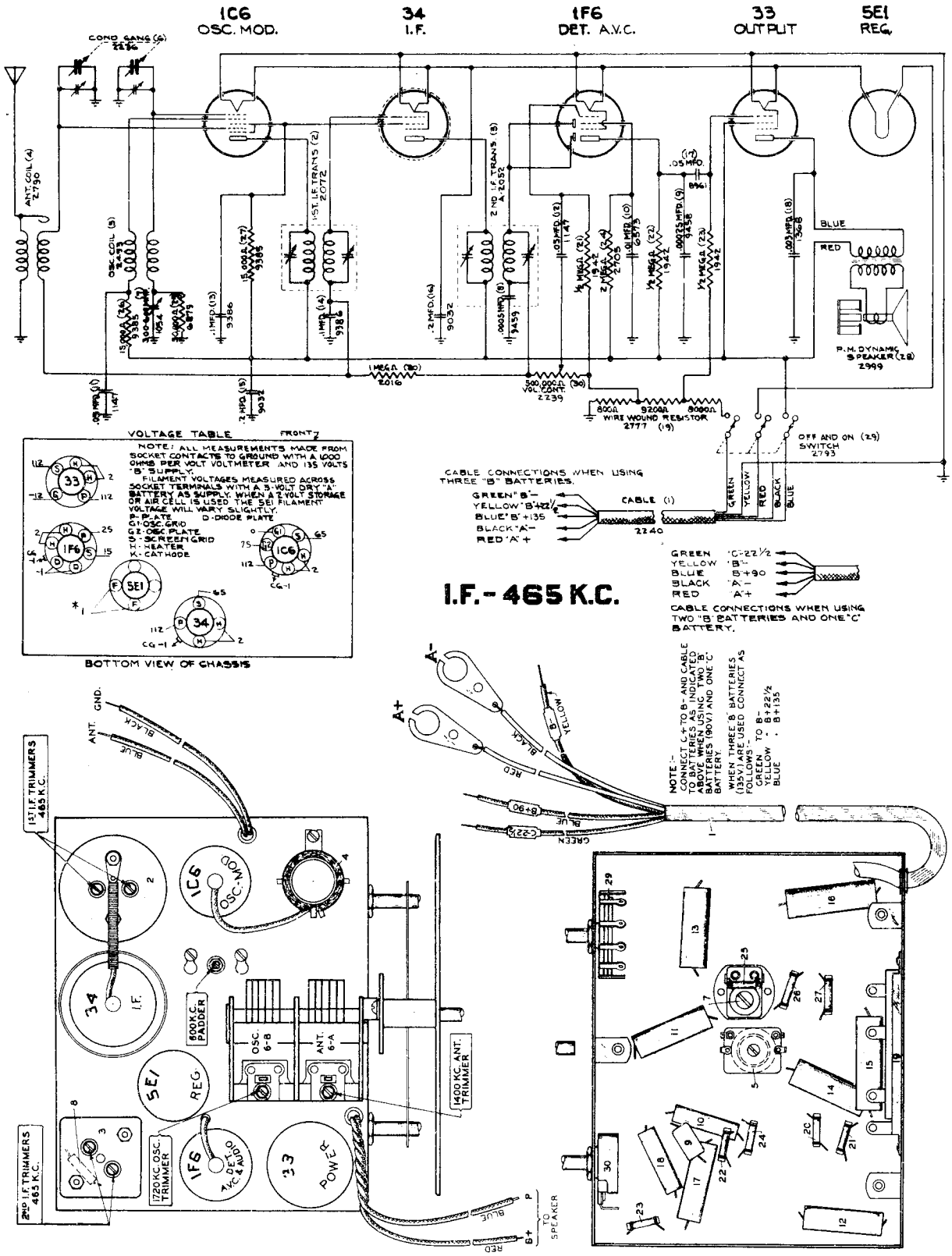

©John F. Rider, Publisher

MODELS A9760,A9761,A9762
A9826,A9828
Chassis 60B
Alignment,Coils,Parts

ALLIED RADIO CORP.

Alignment of this receiver should never be necessary unless one of the coils has been replaced.

Lack of sensitivity, selectivity or poor tone quality may be due to any one or a combination of causes such as weak or defective tubes or speaker, improperly connected or low batteries, open or grounded bias resistor, bypass condenser, inadequate or excessively long antenna, etc. Never attempt to realign set until all other possible sources of trouble have been first thoroughly investigated and definitely proven not to be the cause.

NOTE: BE SURE TO FOLLOW PROCEDURE CAREFULY WHEN ALIGNING, OTHERWISE THE RECEIVER WILL BE INSENSITIVE AND THE DIAL CALIBRATION WILL BE INCORRECT.

IT IS ABSOLUTELY NECESSARY THAT AN ACCURATELY CALIBRATED TEST OSCILLATOR WITH SOME TYPE OF OUTPUT MEASURING DEVICE BE USED WHEN ALIGNING THE RECEIVER.

ALIGNING I. F. STAGE AT 465 KILOCYCLES:

(a) Connect the ground lead of the test oscillator to the chassis or set ground lead. Connect the other lead of the test oscillator to the grid cap of the 1C6 tube through a .02 Mfd. series condenser. DO NOT REMOVE GRID CLIP.

(b) Set test oscillator to EXACTLY 465 kilocycles and turn receiver volume control on full.

(c) Peak each of the second I. F. transformer trimmers.

(d) Peak each of the first I. F. transformer trimmers.
To assure most accurate trimmer setting repeat above adjustment several times always using lowest possible test oscillator output consistent with readable output meter scale deflection.

ALIGNING ANTENNA AND OSCILLATOR CIRCUIT:

(a) Remove test oscillator lead from grid of the 1C6 tube and attach it to the receiver antenna lead through a .00025 Mfd. series condenser.

(b) Check tuning dial adjustment by turning gang condenser until plates touch maximum capacity stop (completely in mesh), at which point the dial needle must be exactly even with the last line at the low frequency end of the dial calibration. If the dial needle does not point exactly to the last line move needle to correct position.

(c) Set receiver dial and test oscillator frequency to EXACTLY 1720 kilocycles.

(d) Bring in 1720 KC test oscillator signal to maximum output by adjusting the trimmer condenser mounted on top of the oscillator section of the gang condenser.
Looking at the front of the receiver the rear section of the gang condenser is the oscillator section.

(e) Tune receiver dial and set test oscillator frequency to EXACTLY 1400 kilocycles.

(f) Adjust trimmer on top of the front section gang condenser (antenna section) for maximum 1400 kilocycle test signal response.

(g) Tune receiver dial and set test oscillator frequency to approximately 600 kilocycles.

(h) While rocking the tuning condenser back and forth adjust 600 KC oscillator padder condenser which is accessible through the hole in the top of the chassis adjacent to the gang condenser for maximum 600 kilocycle signal response.

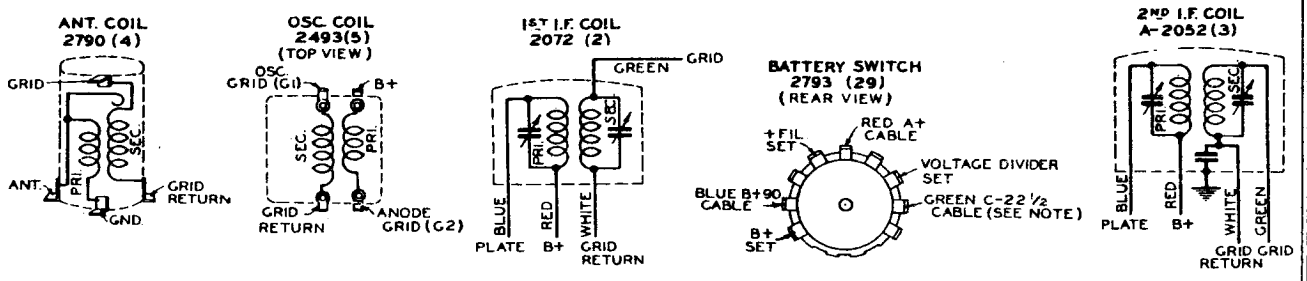

Illus. No.	Part No.	Part Name	Description	List Price
1	2240	Cable	5 Conductor Battery	$ .68
2	2072	Coil	1st I. F. Trans.	1.55
3	2052	Coil	2nd I. F. Trans.	1.90
4	2790	Coil	Antenna	1.00
5	2493	Coil	Oscillator	.55
6	2236	Condenser	Two Gang Tuning	2.50
7	1054	Condenser	Padding (300-600 M.M.F.)	.55
8	9439	Condenser	Mica 0.0005 Mfd.	.21
9	9438	Condenser	Mica 0.00025 Mfd.	.21
10	6573	Condenser	Tubular 0.01 Mfd. 200 Volt	.17
11	1147	Condenser	Tubular 0.05 Mfd. 200 Volt	.19
12	1147	Condenser	Tubular 0.05 Mfd. 200 Volt	.19
13	9386	Condenser	Tubular 0.1 Mfd. 200 Volt	.19
14	9386	Condenser	Tubular 0.1 Mfd. 200 Volt	.19
15	9032	Condenser	Tubular 0.2 Mfd. 200 Volt	.23
16	9032	Condenser	Tubular 0.2 Mfd. 200 Volt	.23
17	8961	Condenser	Tubular 0.05 Mfd. 400 Volt	.19
18	1368	Condenser	Tubular 0.003 Mfd. 400 Volt	.17
19	2777	Resistor	Wire Wound 18,000 Ohm	.63
20	2016	Resistor	Carbon 1 Meg Ohm 1/3 Watt Ins.	.19
21	1942	Resistor	Carbon 1/2 Meg Ohm 1/3 Watt Ins.	.19
22	1942	Resistor	Carbon 1/2 Meg Ohm 1/3 Watt Ins.	.19
23	1942	Resistor	Carbon 1/2 Meg Ohm 1/3 Watt Ins.	.19
24	2705	Resistor	Carbon 2 Meg Ohm 1/3 Watt Ins.	.19
25	6879	Resistor	Carbon 50,000 Ohm 1/3 Watt Ins.	.19
26	9385	Resistor	Carbon 15,000 Ohm 1/3 Watt Ins.	.19
27	9385	Resistor	Carbon 15,000 Ohm 1/3 Watt Ins.	.19
28	2999	Speaker	P. M. Dynamic (6")	5.50
29	2793	Switch	On-Off (3 pole 2 Pos.)	.69
30	2239	Volume Control		.80
			MISCELLANEOUS	
	9987	Base	Tube Shield	.05
	3183	Dial Assembly	Complete Tuning, Mention Required Name	2.25
	3177	Dial Scale	Calibrated Scale, Mention Required Name	.48
	2795	Dial Indicator	Off & On Scale for Dial	.27
	2796	Glass	For Dial	.95
	3031	Knob	Small	.19
	3032	Knob	Large	.18
	3043	Pointer	For Tuning Dial	.15
	1411	Shield	Tube	.14

Prices are subject to change without notice.

Part No. 60B

©John F. Rider, Publisher

ALLIED RADIO CORP.

MODELS A9785, A9786, A9855 A9856

Chassis AM8 Schematic, Socket, Trimmers

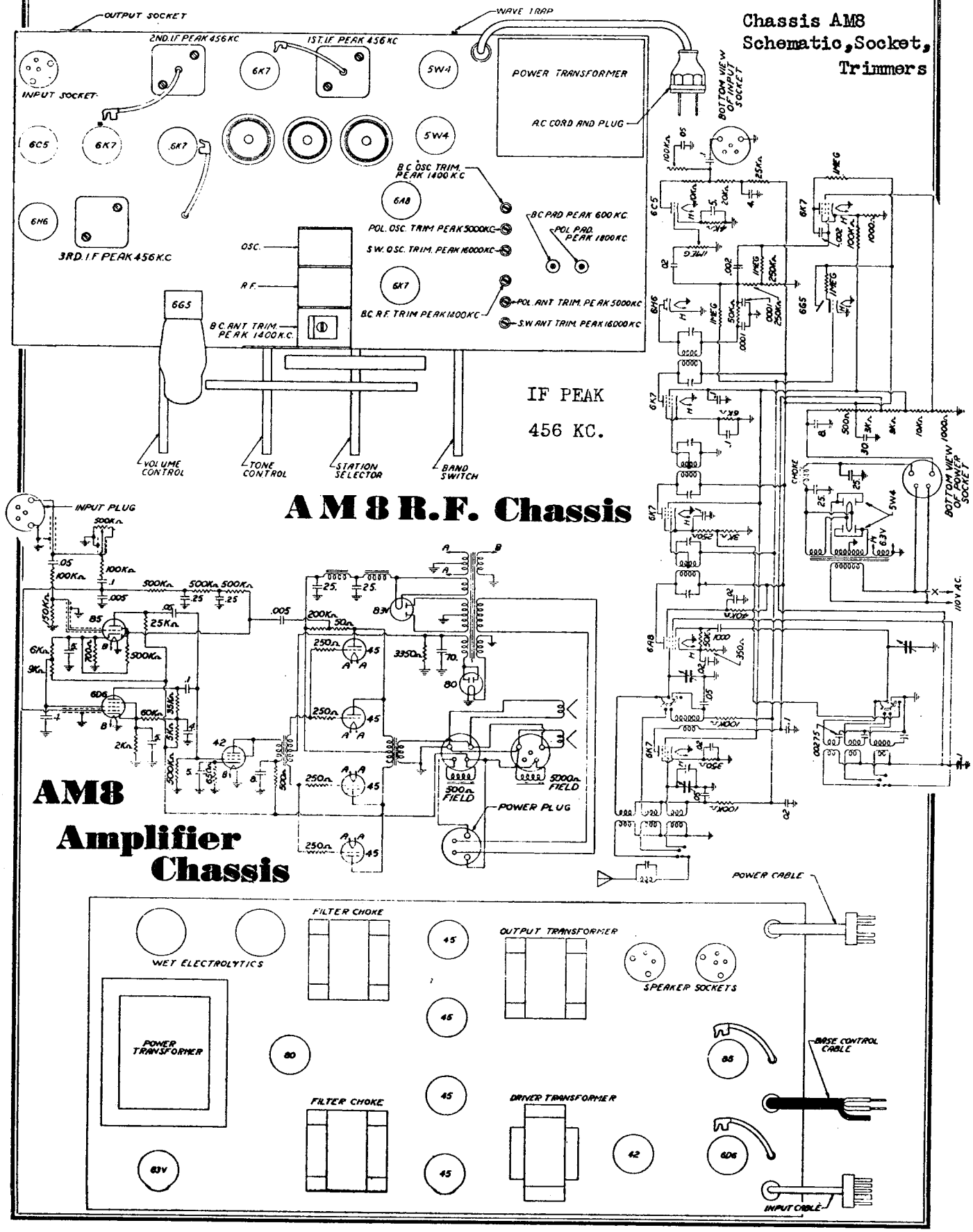

©John F. Rider, Publisher

GENERAL DATA

The alignment of this receiver requires the use of a test oscillator which will cover the frequencies of 456, 600, 1400, 1800, 4000, 6000, and 14,000 KC and an output meter which is to be connection across the primary or secondary of the output transformer. If possible, all alignments should be made with the volume control on maximum and the test oscillator output as low as possible, to prevent the AVC from operating and giving false readings.

CORRECT ALIGNMENT PROCEDURE

The intermediate frequency (I.F.) stages should be aligned properly as the first step. After the I.F. transformers have been properly adjusted and peaked, the Broadcast Band should always be the next procedure; after which, either or both of the Short Wave Bands may be aligned.

I.F. ALIGNMENT

Adjust the test oscillator to 456 KC and connect the output to the grid of the first detector tube (6A8) through a .05 or .1 mfd. condenser. The ground on the test oscillator can be connected to the chassis ground. Align all five I.F. trimmers to peak or maximum reading on the output meter. As there are two stages of I.F. in this receiver, there will be consequently three I.F. transformers to align.

BROADCAST BAND ALIGNMENT

Adjust the oscillator to 1400 KC and connect the output to the antenna post marked "A" through a .001 md. mica condenser to give the equivalent of an antenna about 60 feet. Set the receiver pointer to 1400 KC and adjust the broadcast oscillator trimmer to peak. (See drawing for location.) After this has been carefully done, the next step is to adjust the front trimmer of the gang condenser to peak. The front condenser section tunes the pre-amplifier stage. Then adjust the Broadcast Band R. F. trimmer to peak. This trimmer aligns the grid or input circuit of the 6A8 tube. (See drawing for position of Broadcast R. F. trimmer). Next, re-set the dial pointer on the receiver and the test oscillator to 600 KC. Slowly increase or decrease the B. C. oscillator padding condenser and at the same time continuously tune back and forth across the signal with the receiver until the maximum reading is obtained on the output meter. This adjustment may seem a little complicated but is the easiest way to adjust the oscillator to the R.F. section. (For location of B.C. padding condenser see drawing.) Return to 1400 KC and again go over the adjustments of this frequency to be certain that they were not put slightly out of alignment when adjustment was made at 600 KC. This completes the correct sequence of operations in properly aligning the receiver for the Broadcast Band.

FOREIGN BAND ALIGNMENT

The Foreign Band of 19 to 49 meters can be adjusted by the two trimmers marked and illustrated in the drawing as S.W. oscillator and S.W. trimmer. In preparing the test oscillator for alignment of this band, connect a 400 ohm carbon resistor in series with the .0001 mfd. condenser on the output lead of the test oscillator. Set the receiver pointer to 14,000 KC (also test oscillator).

Then proceed to adjust these two trimmers for peak at 14,000 KC (adjust oscillator trimmer first) and as the inherent design of the circuit has been expressly developed for simplicity in servicing, only these two adjustments are necessary for aligning this band. NOTE: Always start this procedure by having the oscillator coil trimmer loose (out all the way), and the antenna coil trimmer fairly tight (in all the way); otherwise it is possible to make a false alignment on the image frequency. In order to prevent alignment on the image frequency, it is suggested that the following check be made: Readjust the pointer to 13,100 KC where the image frequency should be found. If properly aligned, the image frequency will be found to be weaker. If, however, the signal at 13,100 KC is found to be stronger than the signal at 14,000 KC, it signifies that alignment was incorrectly made on the image frequency.

POLICE BAND

In preparing the test oscillator for alignment of this band, connect a 400 ohm carbon resistor in series with a .0001 mfd. condenser on the output lead of the test oscillator. This resistor is used with the test oscillator only on the Short Wave Bands and should not be used for Broadcast Band alignment.

Set the receiver pointer to 4000 KC (also test oscillator) and adjust the Police Band oscillator circuit trimmer to peak.

After this has been carefully done, the next step is to adjust the Police Band antenna trimmer to peak.

Now reset the dial pointer and the test oscillator to 1800 KC in preparation for adjusting the police band padding condenser.

Slowly increase or decrease the oscillator padding condenser and at the same time continuously tune back and forth across the signal with the receiver until the maximum reading is obtained on the output meter. This adjustment may seem a little complicated, but is the easiest way to correctly adjust the oscillator to the R.F. or antenna section. Return to 4000 KC and again go over the adjustments of this frequency to be certain that they were not put slightly out of alignment when adjustment was made 1800 KC.

If it is found that in returning to 4000 KC the pointer is accurately on scale, no further adjustment should be necessary (in this recheck). If the pointer is found off scale, it may be corrected and put on scale by readjustment of the police band oscillator trimmer. Alignment of the pointer can only be corrected by adjustment of the oscillator trimmer.

IMPORTANT: The Police Band Oscillator Trimmer, Police Band Antenna Trimmer Police Band Padding Trimmer are the only three adjustments required in aligning this band.

WAVE TRAP ADJUSTMENT

At the rear of the chassis near the Antenna and Ground posts is an adjustment screw connected to a trap circuit for elimination of code interference when operating on the broadcast band. If code interference is encountered adjustment of this screw will filter it out. It is to be used only if such interference is experienced in broadcast reception. It's use prevents code transmitters operating on a frequency around 456 K. C. from being received by the I. F. amplifier which is tuned to 456 K. C.

This receiver is designed to operate from a power supply main of 110-120 volts, 60 cycle alternating current (AC). Never plug into a DC outlet.

M 8 19 Tube Radio Set

Part No.	Description
P 124	Pilot Light
P1028	Output Audio Transformer
P1038	Large Knob
P1040	Small Knob
P1047	Broadcast Interstage Coil
P1046	Broadcast Antenna Coil
P1152	Wave Trap Coil
P1172	Power Transformer
P 178	AC Cord and Plug
P1149	1st I.F. Transformer
P1151	2nd I.F. Transformer
P1152	Double Tuned I.F. Transformer
P1129	3 Gang Variable Condenser
P1146	Tilt Dial Complete
P 907	Escutcheon Plate
P 490	6H8 Tube Socket
P 944	5W4 Tube Socket
P 489	6K7 Tube Socket
P 488	6A8 Tube Socket
P1041	6G5 Tube Socket
P1032	Input Audio Transformer
P 945	Speaker Socket
P 873	Speaker Plug

Part No.	Description
P1191	Gang Candohm Resistor
P1158	Volume Control with Switch
P1159	Tone Control
P1135	Wave Switch
P1160	6 Gang Trimmer Condenser
P 617	500 Mmfd. Padding Condenser
P1139	1500 Mmfd. Padding Condenser
G1187	Short Wave Antenna Coil Complete
G1188	Short Wave Oscillator Coil Comp.
G1189	Middle Band Antenna Coil Comp.
G1190	Middle Band Oscillator Coil Comp.
P1145	Straight Dial Complete
P1186	Volume Control with Switch (S. Dial)
P1167	Tone Control (S. Dial)
P1143	Wave Switch (S. Dial)
P 906	Escutcheon Plate and Glass (S. Dial)
P1154	30 Mfd. 300 V. Electrolytic Con.
P1155	12 Mfd. 300 V. Electrolytic Con.
P1043	4 Mfd. 300 V. Electrolytic Con.
P1156	25 Mfd. 450 V Electrolytic Con.
P 304	5 Mfd. 30 V. Electrolytic Con.
P 334	.05-400 V. Condenser
P 142	.10-200 V. Condenser

Part No.	Description
P 276	.10-400 V. Condenser
P 143	.02-400 V. Condenser
P1193	.002-400 V. Condenser
P1194	.005-400 V. Condenser
P1855	.00275 Mica Condenser + 5%
P 490	.0001 Mica Condenser
P1114	2 Megohm ¼ Watt Resistor
P162A	1 Megohm Insulated ¼ Watt Resistor
P1192	1,500 Ohm ¼ Watt Resistor
P 417	50,000 Ohm ¼ Watt Resistor
P 278	1,000 Ohm ¼ Watt Resistor
P 162	1 Meg. Ohm ¼ Watt Resistor
P 136	250 Ohm ¼ Watt Resistor
P 280	100,000 Ohm ¼ Watt Resistor
P1186	600 Ohm ¼ Watt Resistor
P 757	4,000 Ohm ¼ Watt Resistor
P1169	15,000 Ohm 1 Watt Resistor
P 810	350 Ohm ¼ Watt Resistor
P 167	10,000 Ohm ¼ Watt Resistor
P 419	20,000 Ohm ¼ Watt Resistor
P 165	25,000 Ohm ¼ Watt Resistor

P 136	250 Ohm Resis.	¼ Watt Resis.
P 137	500,000 Ohm Resis.	¼ Watt Resis.
P 165	25,000 Ohm Resis.	1 Watt Resis.
P 167	10,000 Ohm Resis.	½ Watt Resis.
P 418	150,000 Ohm Resis.	¼ Watt Resis.
P1215	35,000 Ohm Resis.	1 Watt Resis.
P1216	5,000 Ohm Resis.	¼ Watt Resis.
P1230	60,000 Ohm Resis.	2 Watt Resis.
P1218	2,000 Ohm Resis.	¼ Watt Resis.
P1219	500 Ohm Resis.	½ Watt Resis.
P1220	200,000 Ohm Resis.	¼ Watt Resis.
P1209	Candohm Resistor	
P1210	Gang Candohm Resistor	

Amplifier Unit Parts AM8

Part No.	Description
P1207	45 Tube Socket
P1211	Bass Tone Control
P1212	5 Prong Speaker Socket
P1213	5 Prong Speaker Plug
P1221	Bass Control Cable
P1222	Power Cable
P1223	Input Cable
P1040B	Knob
P 141	.25-200 V Condenser
P1208	70 Mfd. 100 V Electrolytic Con.
P 304	5 Mfd. 25 V Electrolytic Con.
P 850	4-8 Mfd. 450 V Electrolytic Con.
P1156	25 Mfd. 450 V Electrolytic Con.

Part No.	Description
P 194	Tube Shields
P 492	80 Tube Socket
P 535	42 Tube Socket
P 536	6D6 Tube Socket
P 873	4 Prong Speaker Plug
P 945	4 Prong Speaker Socket
P1199	Output Audio Transformer
P1200	Power Transformer
P1201	Input Audio Transformer
P1202	Filter Choke
P1203	Filter Choke
P1204	85 Tube Socket
P1206	83 Tube Socket

LOWER CENTER KNOB

(Continuous Variable Bass Control). The bass control permits the regulation of the extreme low notes at the usual volume for reception in the average room, without affecting the high notes.

©John F. Rider, Publisher

ALLIED RADIO CORP.

MODELS A9788, A9789, A9852
A9854
Chassis AM7
Schematic, Socket, Trimmers

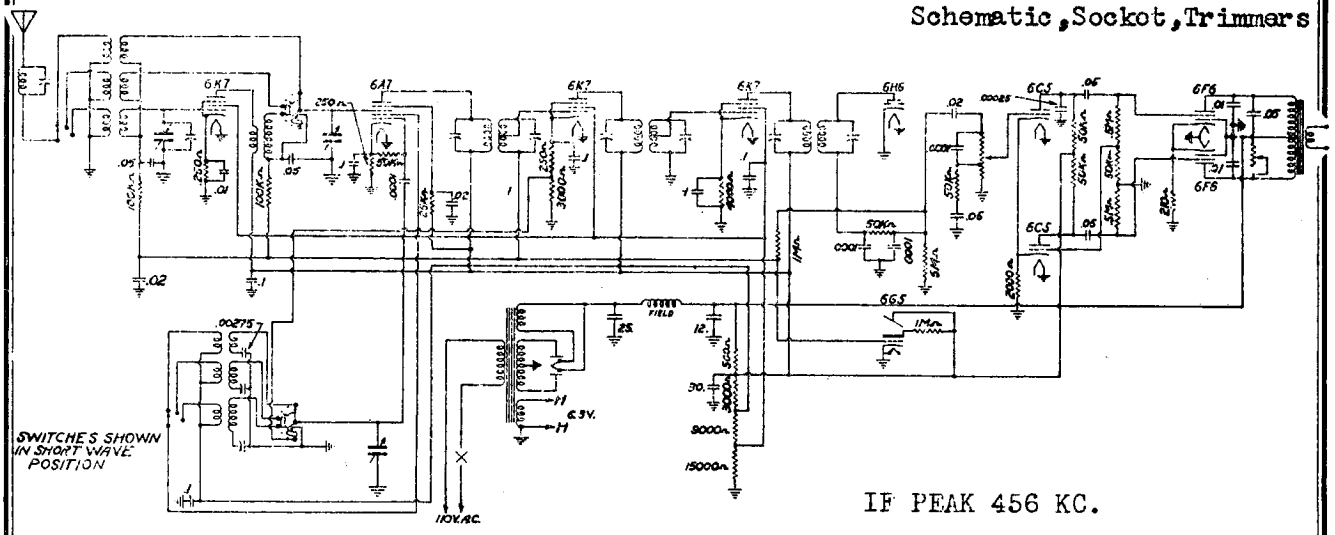

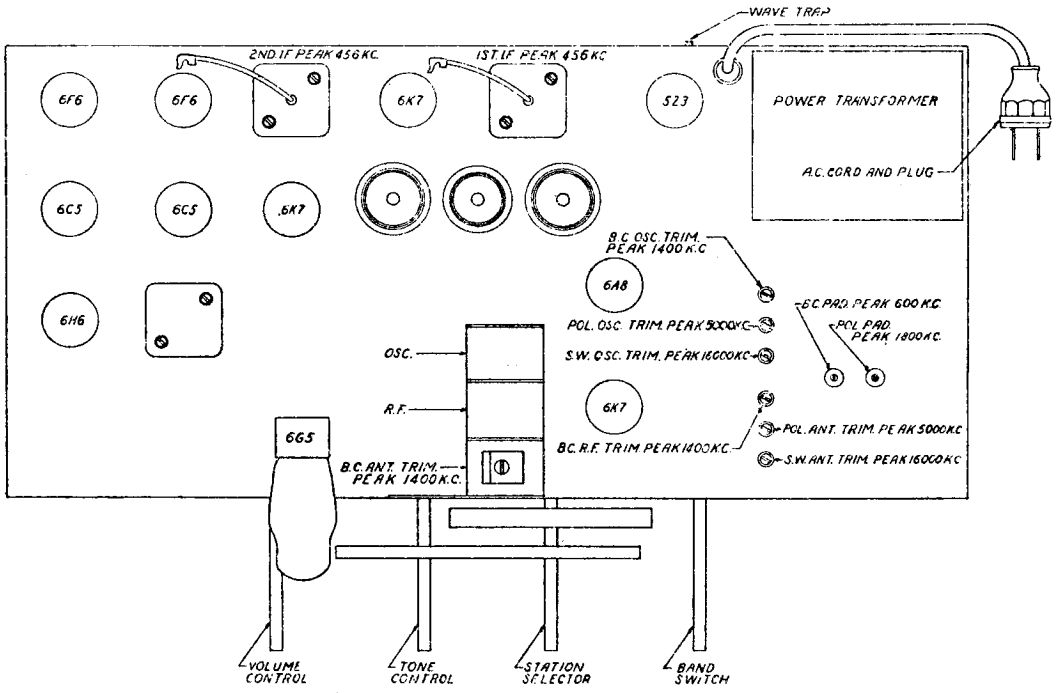

The dial is calibrated with each band covering 340 degrees of tuning scale length and are each concentric with the center of the dial face. The innermost scale is calibrated from 150 to 375 K.C. (2000 to 800 meters) and covers the range necessary for receiving governmental time and weather reports. The second band from the center is for standard broadcasts covering from 550 to 1700 K.C. (175 to 545 meters). The third band from the center covers the intermediate short wave length broadcasts of Police, Amateur, Aircraft and ships and extends from 1700 to 5400 K.C. (55 to 180 meters). The fourth band covers all of the principle short wave channels for reception from countries all over the world. This band carries a calibration of from 5.5 to 18 megacycles (16.4 to 55 meters.) This short wave scale is the one which includes the five internationally assigned bands—the 19, 25, 31, 39 and 49 meter channels.

©John F. Rider, Publisher

MODELS A9788, A9789, A9852
A9854

ALLIED RADIO CORP.

Chassis AM7
Alignment, Parts

GENERAL DATA

The alignment of this receiver requires the use of a test oscillator which will cover the frequencies of 456, 600, 1400, 1800, 4000, 6000, and 14,000 KC and an output meter which is to be connection across the primary or secondary of the output transformer. If possible, all alignments should be made with the volume control on maximum and the test oscillator output as low as possible, to prevent the AVC from operating and giving false readings.

CORRECT ALIGNMENT PROCEDURE

The intermediate frequency (I.F.) stages should be aligned properly as the first step. After the I.F. transformers have been properly adjusted and peaked, the Broadcast Band should always be the next procedure; after which, either or both of the Short Wave Bands may be aligned.

I.F. ALIGNMENT

Adjust the test oscillator to 456 KC and connect the output to the grid of the first detector tube (6A8) through a .05 or .1 mfd. condenser. The ground on the test oscillator can be connected to the chassis ground. Align all five I.F. trimmers to peak or maximum reading on the output meter. As there are two stages of I.F. in this receiver, there will be consequently three I.F. transformers to align.

BROADCAST BAND ALIGNMENT

Adjust the oscillator to 1400 KC and connect the output to the antenna post marked "A" through a .001 md. mica condenser to give the equivalent of an antenna about 60 feet. Set the receiver pointer to 1400 KC and adjust the broadcast oscillator trimmer to peak. (See drawing for location.) After this has been carefully done, the next step is to adjust the front trimmer of the gang condenser to peak. The front condenser section tunes the pre-amplifier stage. Then adjust the Broalcast Band R. F. trimmer to peak. This trimmer aligns the grid or input circuit of the 6A8 tube. (See drawing for position of Broadcas R. F. trimmer). Next, re-set the dial pointer on the receiver and the test oscillator to 600 KC. Slowly increase or decrease the B. C. oscillator padding condenser and at the same time continuously tune back and forth across the signal with the receiver until the maximum reading is obtained on the output meter. This adjustment may seem a little complicated but is the easiest way to adjust the oscillator to the R.F. section. (For location of B.C. padding condenser see drawing.) Return to 1400 KC and again go over the adjustments of this frequency to be certain that they were not put slightly out of alignment when adjustment was made at 600 KC.

This completes the correct sequence of operations in properly aligning the receiver for the Broadcast Band.

FOREIGN BAND ALIGNMENT

The Foreign Band of 19 to 49 meters can be adjusted by the two trimmers marked and illustrated in the drawing as S.W. oscillator and S.W. trimmer. In preparing the test oscillator for alignment of this band, connect a 400 ohm carbon resistor in series with the .0001 mfd. condenser on the output lead of the test oscillator. Set the receiver pointer to 14,000 KC (also test oscillator).

Then proceed to adjust these two trimmers for peak at 14,000 KC (adjust oscillator trimmer first) and as the inherent design of the circuit has been expressly developed for simplicity in servicing, only these two adjustments are necessary for aligning this band. NOTE: Always start this procedure by having the oscillator coil trimmer loose (out all the way), and the antenna coil trimmer fairly tight (in all the way); otherwise it is possible to make a false alignment on the image frequency. In order to prevent alignment on the image frequency, it is suggested that the following check be made: Readjust the pointer to 13,100 KC where the image frequency should be found. If properly aligned, the image frequency will be found to be weaker. If, however, the signal at 13,100 KC is found to be stronger than the signal at 14,000 KC, it signifies that alignment was incorrectly made on the image frequency.

POLICE BAND

In preparing the test oscillator for alignment of this band, connect a 400 ohm carbon resistor in series with a .0001 mfd. condenser on the output lead of the test oscillator. This resistor is used with the test oscillator only on the Short Wave Bands and should not be used for Broadcast Band alignment.

Set the receiver pointer to 4000 KC (also test oscillator) and adjust the Police Band oscillator circuit trimmer to peak.

After this has been carefully done, the next step is to adjust the Police Band antenna trimmer to peak.

Now reset the dial pointer and the test oscillator to 1800 KC in preparation for adjusting the police band padding condenser.

Slowly increase or decrease the oscillator padding condenser and at the same time continuously tune back and forth across the signal with the receiver until the maximum reading is obtained on the output meter. This adjustment may seem a little complicated, but is the easiest way to correctly adjust the oscillator to the R.F. or antenna section. Return to 4000 KC and again go over the adjustments of this frequency to be certain that they were not put slightly out of alignment when adjustment was made 1800 KC.

If it is found that in returning to 4000 KC the pointer is accurately on scale, no further adjustment should be necessary (in this recheck). If the pointer is found off scale, it may be corrected and put on scale by readjustment of the police band oscillator trimmer. Alignment of the pointer can only be corrected by adjustment of the oscillator trimmer.

IMPORTANT: The Police Band Oscillator Trimmer, Police Band Antenna Trimmer Police Band Padding Trimmer are the only three adjustments required in aligning this band.

WAVE TRAP ADJUSTMENT

At the rear of the chassis near the Antenna and Ground posts is an adjustment screw connected to a trap circuit for elimination of code interference when operating on the broadcast band. If code interference is encountered adjustment of this screw will filter it out. It is to be used only if such interference is experienced in broadcast reception. It's use prevents code transmitters operating on a frequency around 456 K. C. from being received by the I. F. amplifier which is tuned to 456 K. C.

This receiver is designed to operate from a power supply main of 110-120 volts, 60 cycle alternating current (AC). Never plug into a DC outlet.

AM 7, 11 Tube Radio

Part No.	DESCRIPTION
P 124	Pilot Light
P1165	Output Audio Transformer
P1038	Knob Large
P1040	Knob Small
P1047	Broadcast Interstage Coil
P1046	Broadcast Antenna Coil
P1162	Wave Trap Coil
P1150	Power Transformer
P 176	AC Cord and Plug
P1149	1st I.F. Transformer
P1151	2nd I.F. Transformer
P1152	Double Tuned I.F. Transformer
P1129	3 Gang Variable Condenser
P1146	Tilt Dial Complete
P 907	Escutcheon Plate and Glass
P 490	6H6 Tube Socket
P 493	6F6 Tube Socket
P 522	6C5 Tube Socket
P 489	6K7 Tube Socket
P 488	6A8 Tube Socket
P1153	5Z3 Tube Socket
P1041	6G5 Tube Socket
P 945	Speaker Socket
P 873	Speaker Plug
P1157	Gang Candohm Resistor
P1158	Volume Control and Switch
P1159	Tone Control
P1135	Wave Switch
P1160	6 Gang Trimmer Condenser
P 617	500 Mmfd. Padding Condenser
P1139	1500 Mmfd. Padding Condenser
P1145	Straight Dial Complete
P1166	Volume Control and Switch (S. Dial)
P1167	Tone Control (S. Dial)
P1143	Wave Switch (S. Dial)
P906	Escutcheon Plate (S. Dial)
P1154	30 Mfd. 300 V. Electrolytic Con.
P1155	12 Mfd. 300 V. Electrolytic Con.
P1156	25 Mfd. 450 V. Electrolytic Con.
P 142	.10-200 V. Condenser
P 276	.10-400 V. Condenser
P 334	.05-400 V. Condenser
P 143	.02-400 V. Condenser
P 671	.01-200 V. Condenser
P 335	.01-600 V. Condenser
P1055	.00275 Mica 5% Condenser
P 480	.0001 Mica Condenser
P 137	500,000 ¼ Watt Resistor
P 147	50,000 ¼ Watt Resistor
P 278	1,000 ¼ Watt Resistor
P 162	1 Meg. ¼ Watt Resistor
P 756	2,000 ¼ Watt Resistor
P1169	15,000 1 Watt Resistor
P 136	250 ¼ Watt Resistor
P 280	100,000 ¼ Watt Resistor
P1186	600 ¼ Watt Resistor
G1187	Short Wave Antenna Coil Comp.
G1188	Short Wave Oscillator Coil Comp.
G1189	Middle Band Antenna Coil Comp.
G1190	Middle Band Oscillator Coil Comp.
G1195	12" Speaker Complete (Less Output)

If it is suspected that the oscillator has stopped but is doubtful due to the presence of the usual amount of noise level, it is suggested that the oscillator plate voltage be checked. To ascertain whether the tube is oscillating, ground the oscillator grid of the 6A8 (short stator and rotor plates of oscillator section on gang condenser). If oscillating properly, grounding the grid will cause an appreciable drop in oscillator voltage. Grounding or shorting the stator and grid components should be accomplished by grounding the stator mounting nut to the frame of the condenser with a screw-driver or any metallic conductor.

©John F. Rider, Publisher

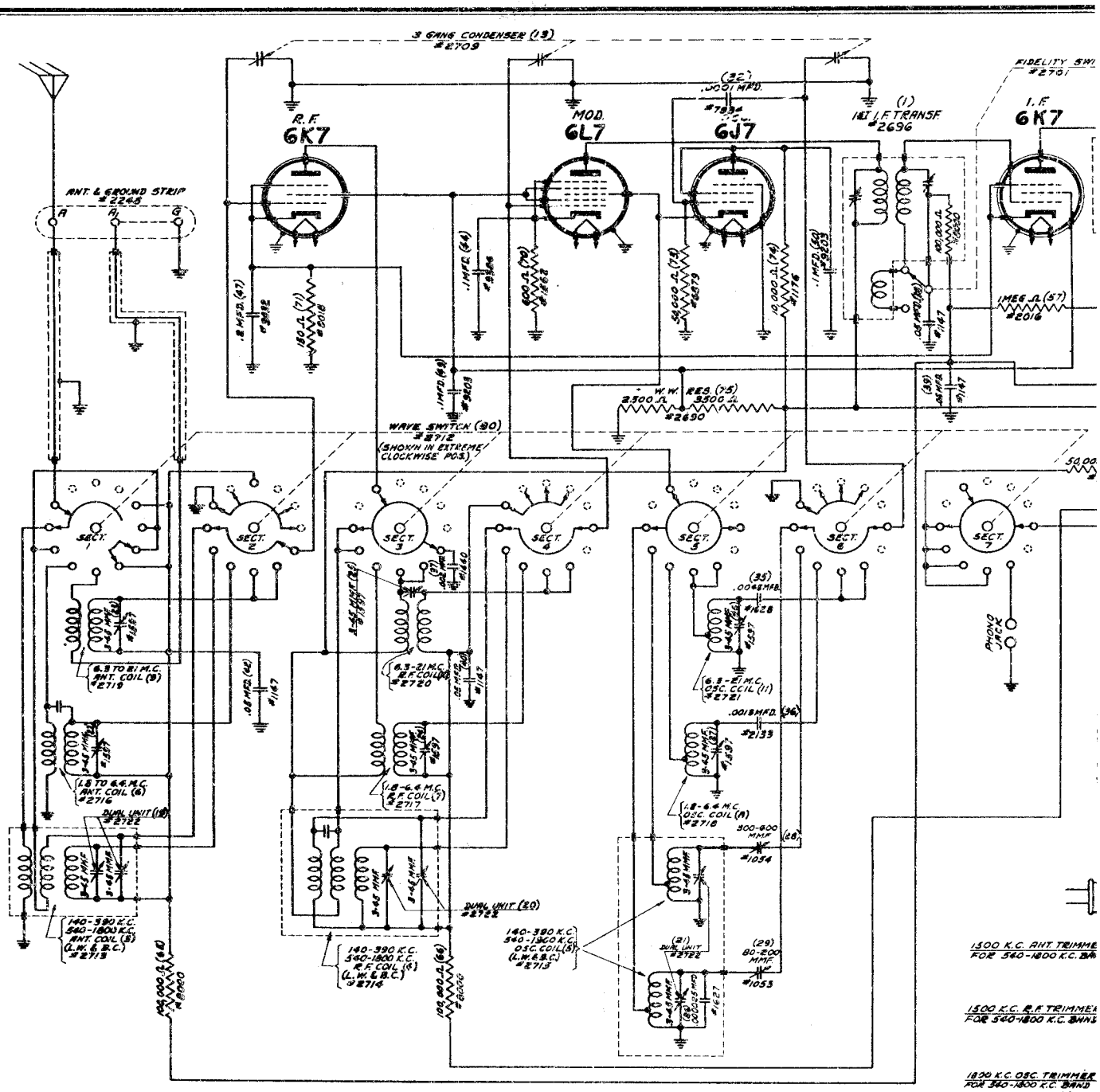

©John F. Rider, Publisher

ALLIED RADIO CORP.

MODELS A9830, A9831
Chassis 47AE
Schematic, Voltage, Trimmers

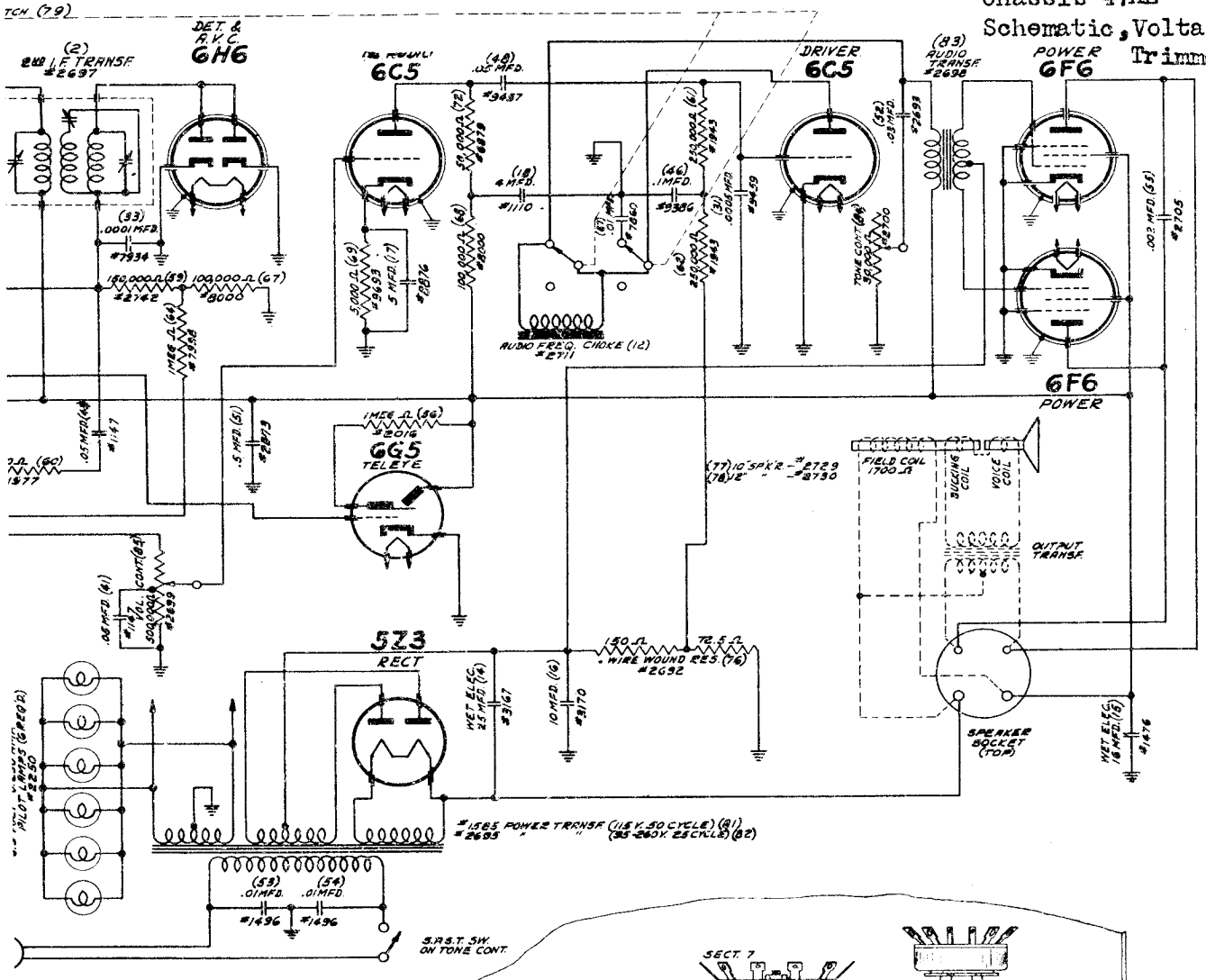

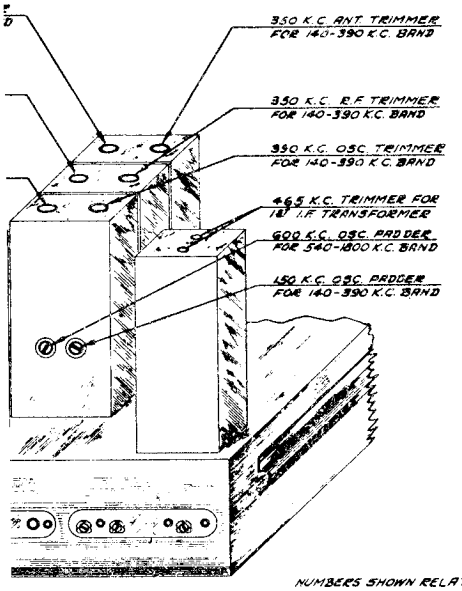

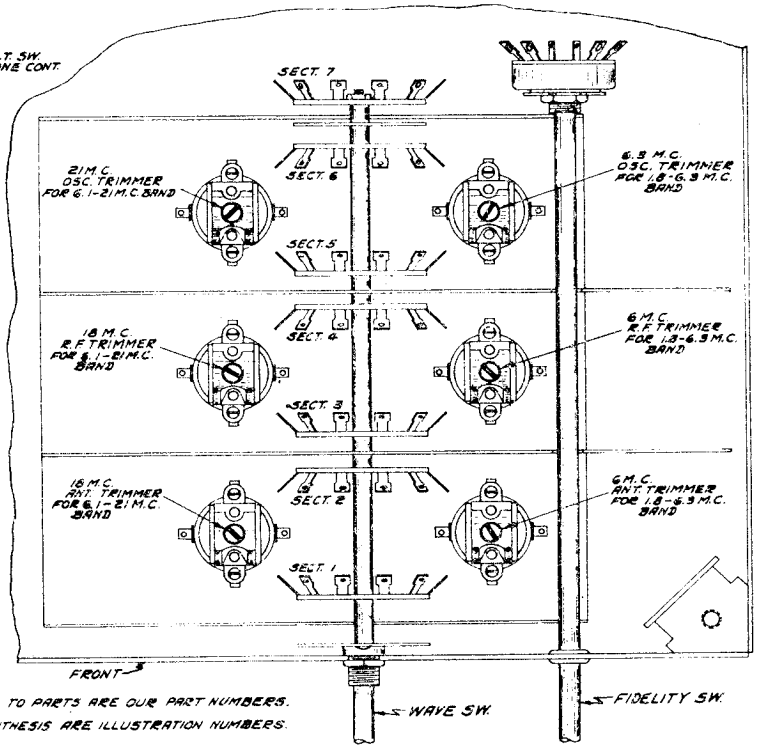

NUMBERS SHOWN RELATIVE TO PARTS ARE OUR PART NUMBERS.
NUMBERS SHOWN IN PARENTHESIS ARE ILLUSTRATION NUMBERS.

BOTTOM VIEW OF CHASSIS

F CHASSIS
K.C.

Schematic, Trimmers, Voltage Coils

ALLIED RADI

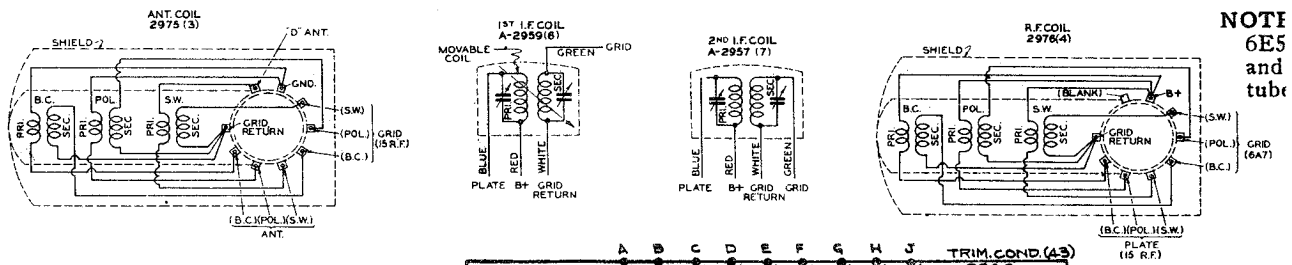

NOTE
6E5
and
tube

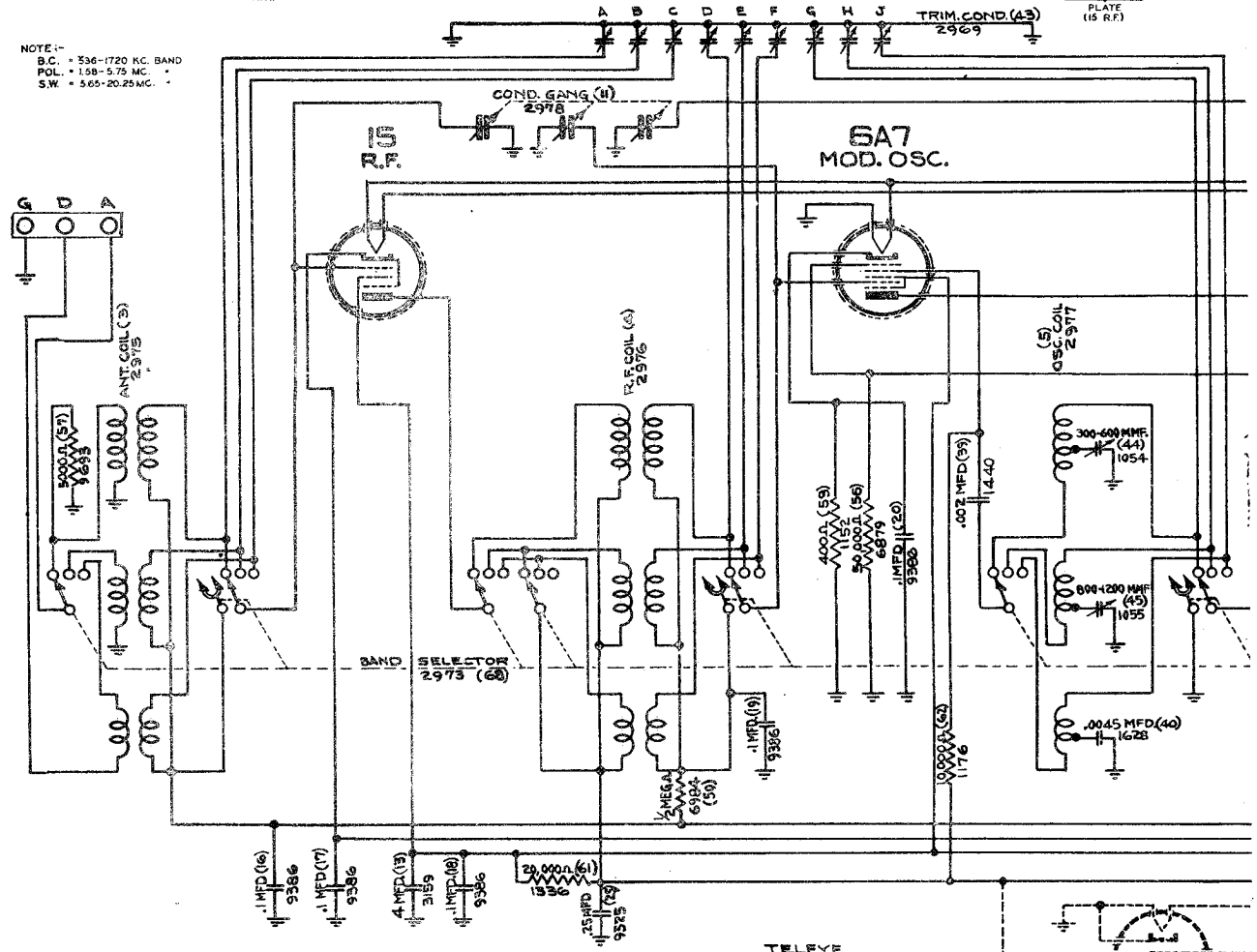

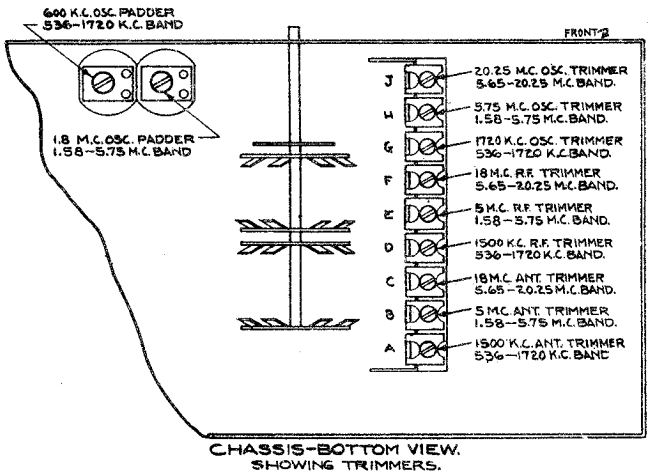

CHASSIS-BOTTOM VIEW.
SHOWING TRIMMERS.

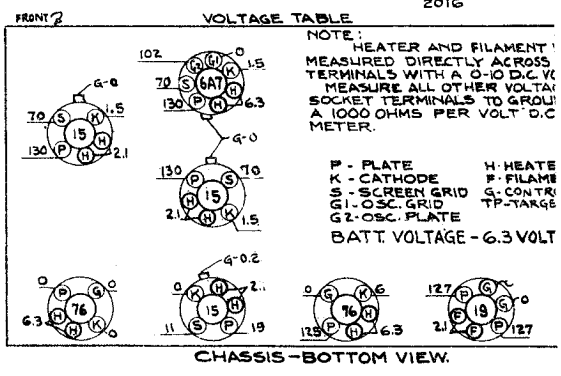

CHASSIS-BOTTOM VIEW.

©John F. Rider, Publisher

O CORP

MODELS A9833 to A9838 incl.
Chassis 66B,66BE

: Some of these model receivers were equipped with "Teleye" the cathode ray visual tuning indicator. A tube was used in early production models, which was replaced by a 6G5 tube in later production. The parts connections shown in the dotted lines on the complete circuit diagram are used only when a 6G5 "Teleye" is incorporated in the receiver. The diagram below shows 6E5 tube connections.

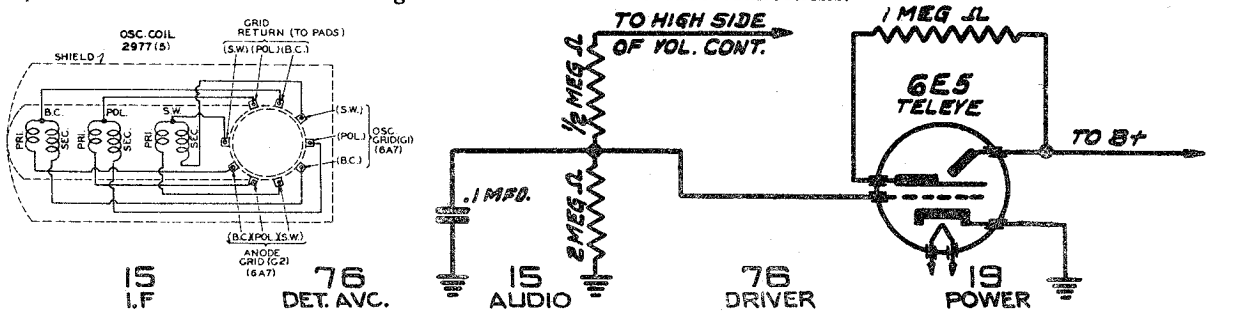

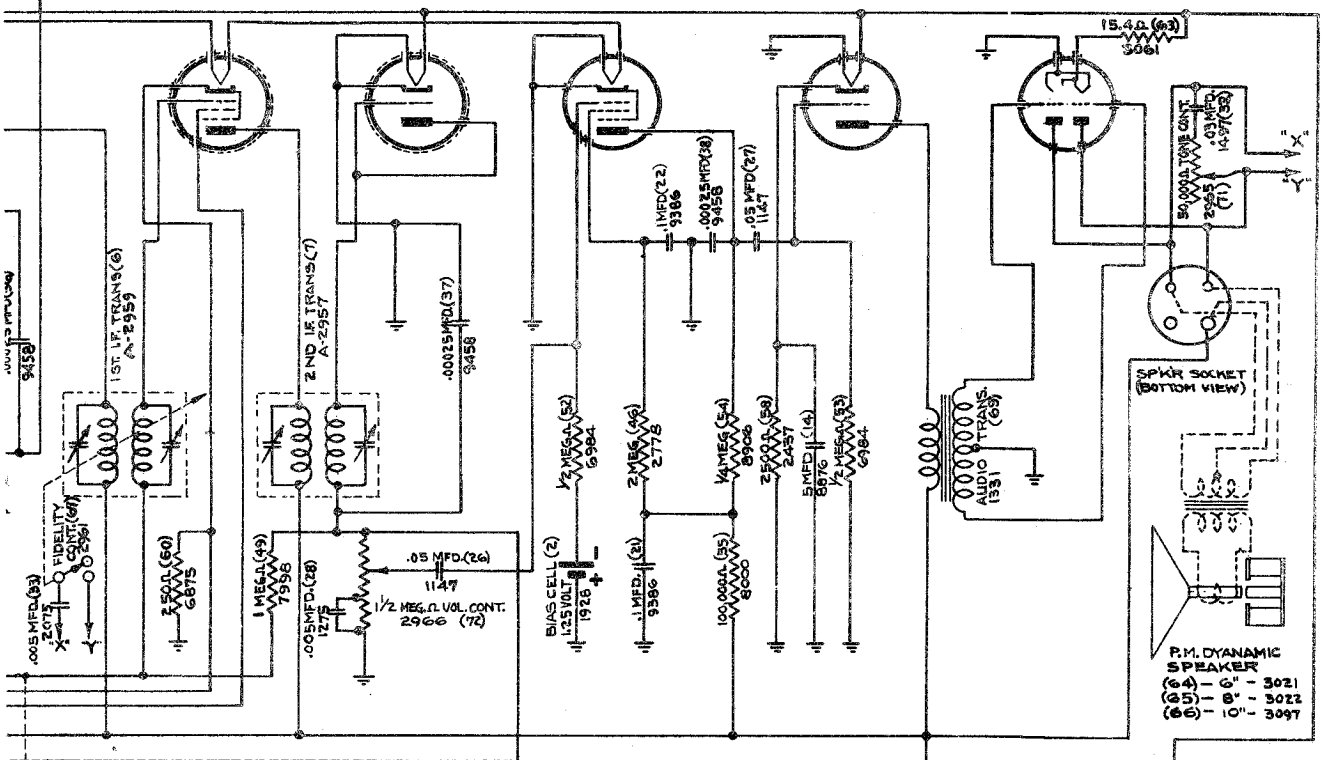

VOLTAGES
SOCKET
VOLTMETER
ES FROM
ND WITH
VOLT-

R
NT
L GRID
T PLATE
S

NOTES 1. **I.F.–465 K.C.**

2. NUMBERS SHOWN PREFIXED WITH AN "A" ARE COMPLETE ASSEMBLIES.
3. NUMBERS SHOWN RELATIVE TO PARTS ARE PART NUMBERS.
4. NUMBERS SHOWN IN PARENTHESIS ARE ILLUSTRATION NUMBERS.
5. SOME MODELS ARE EQUIPPED WITH TELEYE DOTTED LINES SHOW CONNECTIONS

ALLIED RADIO CORP.

Service Notes For The Four Band AC Operated Superheterodyne Receiver

NOTE: IT IS ABSOLUTELY NECESSARY THAT AN ACCURATELY CALIBRATED TEST OSCILLATOR WITH SOME TYPE OF OUTPUT MEASURING DEVICE BE USED WHEN ALIGNING THE RECEIVER AND THAT THE PROCEDURE BE CAREFULLY FOLLOWED, OTHERWISE THE RECEIVER WILL BE INSENSITIVE AND THE DIAL CALIBRATION WILL BE INCORRECT.

TRIMMER AND PADDING CONDENSERS WILL BE REFERRED TO BY THEIR FUNCTION AS INDICATED ON THE CIRCUIT DIAGRAM.

ALIGNING I. F. STAGE AT 465 KILOCYCLES:

(a) Attach the ground lead of the test oscillator to the chassis. Connect the other lead to the grid cap of the 6L7 tube through a .02 Mfd. series condenser. DO NOT REMOVE GRID CLIP.
(b) Set test oscillator to EXACTLY 465 kilocycles and turn receiver volume control on full.
(c) Peak each of the second I. F. transformer trimmers.
(d) Peak each of the first I. F. transformer trimmers.

To assure most accurate trimmer setting repeat above adjustment several times always using lowest possible test oscillator output consistent with readable output meter scale deflection.

ALIGNING 1800-540 KILOCYCLE BAND:

(a) Adjust band selector switch for operation on the 1800-540 kilocycle band, remove test oscillator lead from grid of 6L7 tube and connect to receiver antenna terminal through a .00025 Mfd. series condenser.
(b) Set test oscillator frequency and receiver dial to EXACTLY 1800 kilocycles, and bring in 1800 kilocycle test oscillator signal to maximum output by adjusting 1800 kilocycle oscillator trimmer.
(c) Tune receiver dial and set test oscillator frequency to EXACTLY 1500 kilocycles. Adjust 1500 K. C. R. F. and ant. trimmers for maximum sensitivity.
(d) Set test oscillator frequency and receiver dial to approximately 600 kilocycles. Then while rocking gang condenser slightly to right and left, adjust 600 K. C. oscillator padder for maximum signal response.

ALIGNING 1.8-6.3 MEGACYCLE BAND:

(a) Replace .00025 Mfd. antenna series condenser with 400 ohm resistor, adjust band selector switch to 1.8-6.3 megacycles band, tune receiver dial and set test oscillator frequency to EXACTLY 6.3 megacycles. Bring in 6.3 megacycle test oscillator signal to maximum output by adjusting 6.3 M.C. oscillator trimmer.
(b) Tune receiver dial and set test oscillator frequency to EXACTLY 6 megacycles. Then adjust 6 M.C. ant and R.F. trimmers for maximum sensitivity.

ALIGNING 6.1-21 MEGACYCLE BAND:

(a) Place band selector switch for operation on 6.1-21 megacycle band, tune receiver dial and set test oscillator frequency to EXACTLY 21 megacycles.
(b) Adjust 21 M. C. oscillator trimmer to bring in 21 megacycle test signal to maximum output.

NOTE: When adjusting this trimmer two peaks, the fundamental and the image peak will be noticed. CARE MUST BE TAKEN THAT THE FUNDAMENTAL PEAK AND NOT THE IMAGE PEAK IS USED FOR ALIGNING THE RECEIVER AT 21 MEGACYCLES. Always back off the trimmer to minimum capacity, then screw down the trimmer (add capacity) until the first peak which is the fundamental and the proper one to use is tuned in. If the trimmer is screwed down beyond the point where the first peak is received, the incorrect image peak will be tuned in. After completing adjustment of the oscillator trimmer at 21 megacycles always check to see if the proper peak has been used. To do this leave test oscillator frequency at 21 megacycles, increase the output of the test oscillator and tune receiver dial to approximately 20 megacycles. Then vary the receiver dial slightly to the right and left of 20 megacycles, and if the fundamental peak was used in aligning at 21 megacycles the test oscillator signal will be heard at approximately 20 megacycles on the receiver dial.

(c) Tune receiver dial and set test oscillator frequency to EXACTLY 18 megacycles.
(d) Adjust 18 M. C. antenna and R. F. trimmers for maximum 18 megacycle test signal response.

ALIGNING 390-140 KILOCYCLE BAND:

(a) Adjust band selector switch for operation on 390 to 140 kilocycle band, tune receiver dial and set test oscillator frequency to EXACTLY 390 kilocycles.
(b) Bring in 390 Kilocycle test signal to maximum output by adjusting 390 K. C. oscillator trimmer.
(c) Tune receiver dial and set test oscillator frequency to EXACTLY 350 kilocycles. Adjust 350 K. C. ant. and R. F. trimmers for maximum sensitivity.
(d) Tune receiver dial and set test oscillator frequency to approximately 150 kilocycles, then while rocking gang condenser slightly to right and left adjust 150 kilocycle oscillator padder for maximum sensitivity.

Prices are subject to change without notice.

Illus. No.	Part No.	Part Name	Description	List Price
1	2696	Coil	1st I. F. Transformer	$1.85
2	2697	Coil	2nd I. F. Transformer	2.25
3	2713	Coil	Antenna 140-390 & 540-1800 K.C. Band	1.80
4	2714	Coil	R.F. 140-390 & 540-1800 K.C. Band	2.00
5	2715	Coil	Osc. 140-390 & 540-1800 K.C. Band	3.25
6	2716	Coil	Antenna 1.8-6.3 M.C. Band	.77
7	2717	Coil	R.F. 1.8-6.3 M.C. Band	.70
8	2718	Coil	Oscillator 1.8-6.3 M.C. Band	.70
9	2719	Coil	Antenna 6.1-21 M.C. Band	.70
10	2720	Coil	R.F. 6.1-21 M.C. Band	.70
11	2721	Coil	Oscillator 6.1-21 M.C. Band	.80
12	2711	Choke	Audio Frequency	.90
13	2709	Condenser	Three Gang Tuning	4.00
14	3167	Condenser	25 Mfd. Wet Electrolytic	1.25
15	1476	Condenser	16 Mfd. Wet Electrolytic	1.40
16	3170	Condenser	10 Mfd. Dry Electrolytic	.70
17	8876	Condenser	5 Mfd. Dry Electrolytic	.85
18	1110	Condenser	4 Mfd. Dry Electrolytic	1.14
19	2722	Condenser	3-45 M.M.F. (Dual Unit) Trimmer	.27
20	2722	Condenser	3-45 M.M.F. (Dual Unit) Trimmer	.27
21	2722	Condenser	3-45 M.M.F. (Dual Unit) Trimmer	.27
22	1597	Condenser	3-45 M.M.F. Trimmer	.21
23	1597	Condenser	3-45 M.M.F. Trimmer	.21
24	1597	Condenser	3-45 M.M.F. Trimmer	.21
25	1597	Condenser	3-45 M.M.F. Trimmer	.21
26	1597	Condenser	3-45 M.M.F. Trimmer	.21
27	1597	Condenser	3-45 M.M.F. Trimmer	.21
28	1054	Condenser	300-600 M.M.F. Padding (Red Dot)	.55
29	1053	Condenser	80-200 M.M.F. Padding (Yellow Dot)	.50
31	9459	Condenser	.0005 Mfd. Mica	.21
32	7934	Condenser	.0001 Mfd. Mica	.21
33	7934	Condenser	.0001 Mfd. Mica	.21
35	1628	Condenser	.0045 Mfd. Mica (Yellow Dot)	.21
36	2133	Condenser	.0013 Mfd. Mica (Yellow Dot)	.21
37	1440	Condenser	.002 Mfd. Mica	.21
38	1147	Condenser	.05 Mfd. 200 Volt Tubular	.19
39	1147	Condenser	.05 Mfd. 200 Volt Tubular	.19
40	1147	Condenser	.05 Mfd. 200 Volt Tubular	.19
41	1147	Condenser	.05 Mfd. 200 Volt Tubular	.19
42	1147	Condenser	.05 Mfd. 200 Volt Tubular	.19
43	1147	Condenser	.05 Mfd. 200 Volt Tubular	.19
44	9386	Condenser	.1 Mfd. 200 Volt Tubular	.19
46	9386	Condenser	.1 Mfg. 200 Volt Tubular	.19
47	9032	Condenser	.2 Mfd. 200 Volt Tubular	.23
48	9457	Condenser	.05 Mfd. 400 Volt Tubular	.18
49	9203	Condenser	.1 Mfd. 400 Volt Tubular	.20
50	9203	Condenser	.1 Mfd. 400 Volt Tubular	.20
51	2073	Condenser	.5 Mfd. 400 Volt Tubular	.56
52	2693	Condenser	.03 Mfd. 400 Volt Tubular	.19
53	1496	Condenser	.01 Mfd. 600 Volt Tubular	.18
54	1496	Condenser	.01 Mfd. 600 Volt Tubular	.18
55	2705	Condenser	.002 Mfd. 1000 Volt Tubular	.19
56	2016	Resistor	Carbon 1 Meg. Ohm 1/3 Watt Ins.	.19
57	2016	Resistor	Carbon 1 Meg. Ohm 1/3 Watt Ins.	.19

Illus. No.	Part No.	Part Name	Description	List Price
59	2742	Resistor	Carbon 150,000 Ohm 1/3 Watt Ins.	.19
60	1977	Resistor	Carbon 50,000 Ohm 1/3 Watt Ins.	.19
61	1943	Resistor	Carbon 250,000 Ohm 1/3 Watt Ins.	.19
62	1943	Resistor	Carbon 250,000 Ohm 1/3 Watt Ins.	.19
64	7998	Resistor	Carbon 1 Meg. Ohm 1/3 Watt	.19
65	8000	Resistor	Carbon 100,000 Ohm 1/3 Watt	.19
66	8000	Resistor	Carbon 100,000 Ohm 1/3 Watt	.19
67	8000	Resistor	Carbon 100,000 Ohm 1/3 Watt	.19
68	8000	Resistor	Carbon 100,000 Ohm 1/3 Watt	.19
69	9693	Resistor	Carbon 5,000 Ohm 1/3 Watt	.19
70	1562	Resistor	Carbon 600 Ohm 1/3 Watt	.19
71	9018	Resistor	Carbon 150 Ohm 1/3 Watt	.19
72	6879	Resistor	Carbon 50,000 Ohm 1/3 Watt	.19
73	6879	Resistor	Carbon 50,000 Ohm 1/3 Watt	.19
74	1176	Resistor	Carbon 10,000 Ohm 1/2 Watt	.19
75	2690	Resistor	Wire Wound 2500 & 3500 Ohm	.85
76	2692	Resistor	Wire Wound 72.5 & 150 Ohm	.45
77	2729	Speaker	Dynamic (10")	10.00
78	2730	Speaker	Dynamic (12")	11.00
79	2701	Switch	Fidelity	.70
80	2712	Switch	Band Selector	3.25
81	1585	Transformer	Power (115 Volt 50 Cycle)	6.50
82	2695	Transformer	Power (95-260 Volt 25 Cycle)	12.00
83	2698	Transformer	Audio	2.75
84	2700	Tone Control	(With S.P.S.T. Sw.)	1.00
85	2699	Volume Control		.80
86	1627	Condenser	.000025 Mfd. Mica	.21
87	7860	Condenser	.01 Mfd. 400 Volts	.17

Miscellaneous

	2250	Bulb	6.3 Volt .250 Amp.	.19
	2500	Cable	For 6E5 Tube Socket	.50
	2498	Clamp	For 6E5 Tube	.08
	2418	Dial Assembly	Complete with Bulbs	10.00
	2419	Dial Scale	Calibrated Glass Scale 1st type Green Band A	2.25
	3225	Dial Scale	Calibrated Glass Scale 2nd type Yellow Band A	2.25
	2748	Dial Indicator	"Broad & Sharp" Scale with arm	.55
	2759	Dial Indicator	"Band" Scale with arm, use with No. 2419 Dial Scale only	.75
	3233	Dial Indicator	"Band" Scale with arm, use with No. 3325 Dial Scale only	.75
	2725	Dial Glass	With Escutcheon	2.00
	3149	Knob	Marked "Tuning"	.30
	2444	Knob	Marked "Volume"	.30
	2732	Knob	Marked "Selectivity"	.30
	2443	Knob	Marked "Band Selector"	.30
	2535	Knob	Marked "Tone-On-Off"	.30
	2762	Pointer	Long Band Spread	.10
	2763	Pointer	Short Band Spread	.10
	2765	Screw	For Pointer Net	.01
	2528	Shell	Bakelite for 6E5 Tube Socket	.09
	2529	Socket	For 6E5 Tube	.13
	2248	Strip	Antenna and Ground Post Assembly	.22

©John F. Rider, Publisher

MODELS A9752, A9753, A9754
A9755, Chassis 46A
MODELS A9768, A9769, A9770
Chassis 68B, 68BE

ALLIED RADIO CORP.

Alignments

CHASSIS MODEL No. 46A
A. C. Superheterodyne Receiver

Model 68B-68BE—
Six Volt Storage Battery Operated
Three Band Superheterodyne Receiver

ALIGNMENT PROCEDURE:

Realignment of this receiver should never be necessary unless one of the oscillator, antenna, or I. F. coils has been replaced. Lack of sensitivity, selectivity, and poor tone quality may be due to any one or a combination of causes, such as weak or defective tubes or speaker, inadequate or excessively long antenna, open or grounded bias resistor, bypass condenser, etc. Under no circumstances should realignment be attempted until all other possible sources have been first thoroughly investigated and have been definitely proven not to be the cause.

If an I. F. tube is replaced it is advisable to realign the I. F. Amplifier particularly if the replacement tube is one of a different manufacture than the one in the receiver. It is important when aligning to carefully follow the procedure in the order given, otherwise the receiver will lack sensitivity and the dial calibration will be incorrect.

IT IS IMPERATIVE THAT AN ACCURATELY CALIBRATED OSCILLATOR BE USED WITH SOME TYPE OF OUTPUT MEASURING DEVICE.

INTERMEDIATE ALIGNMENT:

1. Connect the high side of the test oscillator output to the control grid of the 6D6 modulator tube through a .02 Mfd. condenser. Leave the grid cap connected to the grid terminal of the tube, and connect the ground side of the test oscillator to the receiver ground.

2. Set the test oscillator frequency to 465 kilocycles (this must be accurate).

3. Align the second intermediate transformer by turning one of the trimmer screws accessible through holes in the top of the transformer shields up and down (increasing and decreasing capacity) until maximum reading is obtained on the output meter, after which adjust the other trimmer screw of the same transformer for maximum sensitivity.

4. Adjust the first intermediate transformer in the same manner as the second I. F. transformer.

TO ALIGN THE VARIABLE CONDENSER:

It is important when aligning the gang condenser, padding and trimmer condensers to follow the procedure carefully, otherwise the receiver will be insensitive and the dial calibration will be incorrect. The padding and trimmer condensers located underneath the chassis will be referred to by their function as indicated on the circuit diagram.

1. Connect the high output side of the test oscillator through a 400 ohm resistor to the receiver antenna lead and the low side to the set ground.

2. Place the band selector switch for operation on the 5.8 to 18.1 megacycle band, tune the receiver dial, and set the test oscillator frequency to EXACTLY 18.1 MEGACYCLES.

Tune in the 18.1 MEGACYCLE SIGNAL TO MAXIMUM OUTPUT BY ADJUSTING THE 18.1 MEGACYCLE OSCILLATOR TRIMMER. When adjusting this trimmer two peaks, the fundamental and the image peak will be noticed. CARE MUST BE TAKEN THAT THE FUNDAMENTAL PEAK AND NOT THE IMAGE PEAK IS USED FOR ALIGNING THE RECEIVER at 18.1 MEGACYCLES. Always back off the trimmer to minimum capacity, then screw down the trimmer (add capacity) until the first peak which is the fundamental and the proper one to use is tuned in. If the trimmer is screwed down beyond the point where the first peak is received, the incorrect image peak will be tuned in. After completing adjustment of the oscillator trimmer at 18.1 megacycles always check to see if the proper peak has been used. To do this leave the test oscillator frequency at 18.1 megacycles, increase the output of the test oscillator and tune the receiver dial to approximately 17.1 megacycles, and if the fundamental peak was used in aligning at 18.1 megacycles the test oscillator signal will be heard at approximately 17.1 megacycles on the receiver dial. If it is not possible to receive the signal, then the fundamental peak was not used and the 18.1 megacycle oscillator trimmer must be properly readjusted.

3. With band selector switch set for operation on 5.8 to 18.1 megacycle band tune the receiver dial and set test oscillator frequency to EXACTLY 16 MEGACYCLES. Adjust 16 megacycle antenna trimmer for maximum 16 megacycle signal sensitivity.

4. Place band selector switch for operation on 1.7 to 5.8 megacycle band, tune the receiver dial, and set test oscillator frequency to EXACTLY 5.8 MEGACYCLES. BRING IN 5.8 MEGACYCLE SIGNAL TO MAXIMUM OUTPUT by adjusting 5.8 megacycle oscillator trimmer.

5. With the band selector switch set for operation on the 1.7 to 5.8 megacycle band tune receiver dial and set test oscillator frequency to EXACTLY 5 MEGACYCLES. Then adjust 5 megacycle antenna trimmer for maximum 5 megacycle signal sensitivity.

6. Replace the 400 ohm resister in series with test oscillator lead with a 200 Mmfd. condenser, place the band selector switch for operation on the 540 to 1720 kilocycle band, tune receiver dial, and set test oscillator frequency to EXACTLY 1720 KILOCYCLES. NEXT BRING IN THE 1720 KILOCYCLE SIGNAL TO MAXIMUM OUTPUT BY ADJUSTING 1720 KILOCYCLE OSCILLATOR TRIMMER.

7. With band selector switch placed for operation on the 540 to 1720 kilocycle band set test oscillator frequency and receiver dial to EXACTLY 1400 KILOCYCLES. Adjust 1400 kilocycle preselector and antenna trimmers for maximum 1400 kilocycle signal sensitivity.

ALIGNMENT PROCEDURE:

Lack of sensitivity and poor tone quality may be due to any one or a combination of causes such as weak or defective tubes or speaker, low battery voltage, open or grounded bias resistor, bypass condenser, inadequate or excessively long antenna, etc. Never attempt to realign set until all other possible sources of trouble have been first thoroughly investigated and definitely proven not to be the cause.

NOTE: IT IS ABSOLUTELY NECESSARY THAT AN ACCURATELY CALIBRATED TEST OSCILLATOR WITH SOME TYPE OF OUTPUT MEASURING DEVICE BE USED WHEN ALIGNING THE RECEIVER AND THAT THE PROCEDURE BE CAREFULLY FOLLOWED, OTHERWISE THE RECEIVER WILL BE INSENSITIVE AND THE DIAL CALIBRATION WILL BE INCORRECT. THE TRIMMER AND PADDING CONDENSERS WILL BE REFERRED TO BY THEIR FUNCTION AS INDICATED ON THE CIRCUIT DIAGRAM.

ALIGNING I.F. STAGE AT 465 KILOCYCLES:

(a) Attach the ground lead of the test oscillator to the chassis. Connect the other lead to the grid cap of the 6A7 tube through a .02 Mfd. series condenser. DO NOT REMOVE GRID CLIP.
(b) Set test oscillator to EXACTLY 465 kilocycles and turn receiver volume control on full.
(c) Peak each of the second I.F. transformer trimmers.
(d) Peak each of the first I.F. transformer trimmers.

ALIGNING 1720-535 KILOCYCLE BAND:

(a) Check tuning dial adjustment by turning gang condenser until plates touch maximum capacity stop (completely in mesh), at which point the dial needle must be exactly even with the last line at the low frequency end of the dial calibration. If the dial needle does not point exactly to the last line move needle to correct position.
(b) Remove test oscillator lead from grid of 6A7 tube and connect to receiver antenna lead through a .00025 Mfd. series condenser.
(c) Adjust band selector switch for operation on the 1720-535 kilocycle band.
(d) Set test oscillator frequency and receiver dial to EXACTLY 1720 kilocycles, and BRING IN 1720 KILOCYCLE TEST OSCILLATOR SIGNAL TO MAXIMUM OUTPUT BY ADJUSTING 1720 KILOCYCLE OSCILLATOR TRIMMER.
(e) Tune receiver dial and set test oscillator frequency to EXACTLY 1400 kilocycles. Adjust 1400 K.C. preselector and antenna trimmers for maximum sensitivity.
(f) Set test oscillator frequency and receiver dial to approximately 600 kilocycles. Then while rocking gang condenser slightly to right and left, adjust 600 K.C. oscillator padder for maximum signal response.

ALIGNING 1.8-5.8 MEGACYCLE BAND:

(a) Replace .00025 Mfd. test oscillator antenna lead series condenser with a 400 ohm resistor.
(b) Adjust band selector switch to 1.8-5.8 megacycles, tune receiver dial and set test oscillator frequency to EXACTLY 5.8 megacycles. Bring in 5.8 megacycle test signal to maximum output by adjusting 5.8 M.C. oscillator trimmer.
(c) Tune receiver dial and test oscillator frequency to EXACTLY 5 megacycles, and adjust 5 M.C. antenna trimmer for maximum sensitivity.

ALIGNING 5.8-18.3 MEGACYCLE BAND:

(a) Leave 400 ohm resistor in series with test oscillator lead and place band selector switch for operation on 5.8-18.3 megacycle band, tune receiver dial and set test oscillator frequency to EXACTLY 18 megacycles.
(b) Adjust 18 M.C. oscillator trimmer to bring in 18 megacycle test signal to maximum output.

NOTE: When adjusting this trimmer two peaks, the fundamental and the image peak will be noticed. CARE MUST BE TAKEN THAT THE FUNDAMENTAL PEAK AND NOT THE IMAGE PEAK IS USED FOR ALIGNING THE RECEIVER AT 18 MEGACYCLES. Always back off the trimmer to minimum capacity, then screw down the trimmer (add capacity) until the FIRST PEAK which is the fundamental and the proper one to use is tuned in. If the trimmer is screwed down beyond the point where the first peak is received the incorrect image peak will be tuned in. After completing adjustment of the oscillator trimmer at 18 megacycles, always check to see if the proper peak has been used. To do this leave test oscillator frequency at 18 megacycles, increase the output of the test oscillator and tune receiver dial to approximately 17 megacycles. Then vary the receiver dial slightly to the right and left of 17 megacycles, and if the fundamental peak was used in aligning at 18 megacycles the test oscillator signal will be heard at approximately 17 megacycles on the receiver dial.

(c) Tune receiver dial and set test oscillator frequency to EXACTLY 15 megacycles.
(d) Rock gang condenser slightly to right and left and adjust 15 M.C. antenna trimmer for maximum 15 megacycle test signal response.

To assure more accurate trimmer setting, repeat all above adjustments several times always using lowest possible test oscillator output consistent with readable output meter scale deflection.

'46 A-Cont

8. Leave band selector switch for operation on 540 to 1720 kilocycle band, tune receiver dial and set test oscillator frequency to approximately 600 kilocycles. While rocking gang condenser slightly to right and left adjust 600 kilocycle oscillator padder for maximum sensitivity.

©John F. Rider, Publisher

MODELS A9833 to A9838
Chassis 66B,66BE incl.
Socket,Trimmers,Layout

ALLIED RADIO CORP.

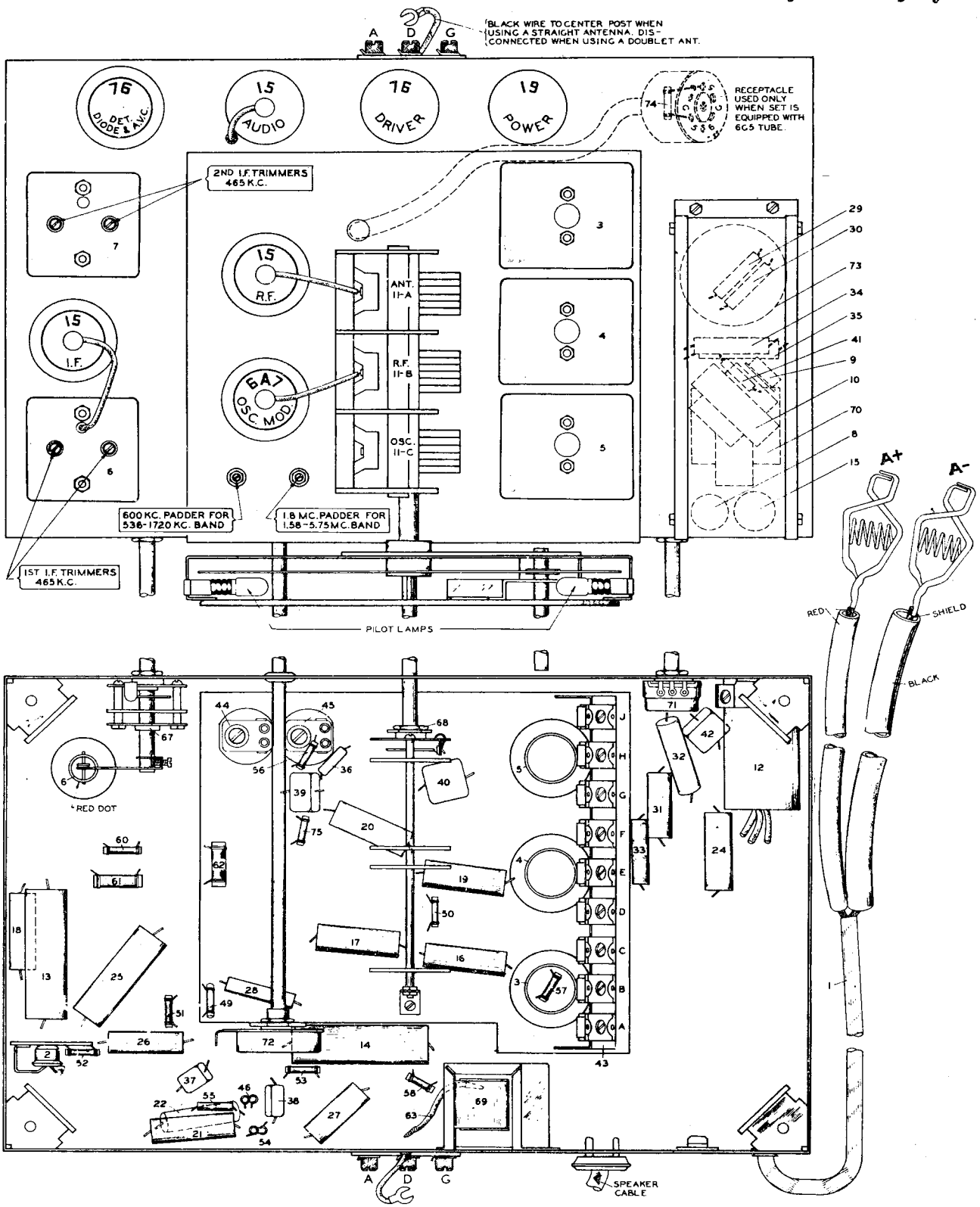

Three Band Model 66B and 66BE
Six Volt Battery Operated Superheterodyne Receiver

©John F. Rider, Publisher

MODELS A9833 to A9838 incl.
Chassis 66B, 66BE

ALLIED RADIO CORP.

Alignment, Parts

ALIGNING I.F.STAGE AT 465 KILOCYCLES:

(a) Attach the ground lead of the test oscillator to the chassis. Connect the other lead to the grid cap of the 6A7 tube through a .02 Mfd. series condenser. DO NOT REMOVE GRID CLIP.
(b) Set test oscillator to EXACTLY 465 kilocycles and turn receiver volume control on full.
(c) Peak each of the second I. F. transformer trimmers.
(d) Peak each of the first I.F. transformer trimmers.
To assure most accurate trimmer setting repeat above adjustment several times always using lowest possible test oscillator output consistent with readable output meter scale deflection.

ALIGNING 1720-536 KILOCYCLE BAND:

(a) Check tuning dial adjustment by turning gang condenser until plates touch maximum capacity stop (completely in mesh), at which point the dial needle must be exactly even with the last line at the low frequency end of the dial calibration. If the dial needle does not point exactly to the last line move needle to correct position.
(b) Remove test oscillator lead from grid of 6A7 tube and connect to receiver antenna post through a .00025 Mfd. series condenser.
(c) Adjust band selector switch for operation on the 1720-536 kilocycle band.
(d) Set test oscillator frequency and receiver dial to EXACTLY 1720 kilocycles, and BRING IN 1720 KILOCYCLE TEST OSCILLATOR SIGNAL TO MAXIMUM OUTPUT BY ADJUSTING 1720 KILOCYCLE OSCILLATOR TRIMMER.
(e) Tune receiver dial and set test oscillator frequency to EXACTLY 1500 kilocycles. Adjust 1500 K.C., R.F. and antenna trimmers for maximum sensitivity.
(e) Set test oscillator frequency and receiver dial to approximately 600 kilocycles. Then while rocking gang condenser slightly to right and left, adjust 600 K. C. oscillator padder for maximum signal response.

ALIGNING 1.58-5.75 MEGACYCLE BAND:

(a) Replace .00025 Mfd. test oscillator antenna lead series condenser with a 400 ohm resistor.
(b) Adjust band selector switch to 1.58-5.75 megacycles, tune receiver dial and set test oscillator frequency to EXACTLY 5.75 megacycles. Bring in 5.75 megacycle test band signal to maximum output by adjusting 5.75 M.C. oscillator trimmer.
(c) Tune receiver dial and test oscillator frequency to EXACTLY 5 Megacycles, and adjust 5 M.C. antenna and R.F. trimmers for maximum sensitivity.
(d) Set test oscillator and receiver dial to approximately 1.8 megacycles. Then while rotating gang condenser slightly to right and left adjust 1.8 megacycle oscillator padder.

ALIGNING 5.65-20.25 MEGACYCLE BAND:

(a) Leave 400 ohm resistor in series with test oscillator lead and place band selector switch for operation on 5.65-20.25 megacycle band, tune receiver dial and set test oscillator frequency to EXACTLY 20.25 megacycles.

(b) Adjust 20.25 M.C. oscillator trimmer to bring in 20.25 megacycle test signal to maximum output.

NOTE: When adjusting this trimmer two peaks, the fundamental and the image peak will be noticed. CARE MUST BE TAKEN THAT THE FUNDAMENTAL PEAK AND NOT THE IMAGE PEAK IS USED FOR ALIGNING THE RECEIVER AT 20.25 MEGACYCLES. Always back off the trimmer to minimum capacity, then screw down the trimmer (add capacity) until the first peak which is the fundamental and the proper one to use is tuned in. If the trimmer is screwed down beyond the point where the first peak is received the incorrect image peak will be tuned in. After completing adjustment of the oscillator trimmer at 20.25 megacycles always check to see if the proper peak has been used. To do this leave test oscillator frequency at 20.25 megacycles, increase the output of the test oscillator and tune receiver dial to approximately 19.25 megacycles. Then vary the receiver dial slightly to the right and left of 19.25 megacycles, and if the fundamental peak was used in aligning at 20.25 megacycles the test oscillator signal will be heard at approximately 19.25 megacycles on the receiver dial.

(c) Tune receiver dial and set test oscillator frequency to EXACTLY 18 megacycles.

(d) Rock gang condenser slightly to right and left and adjust 18 M.C. antenna and R.F. trimmers for maximum 18 megacycle test signal response.

Prices are subject to change without notice.

Illus. No.	Part No.	Part Name	Description	List Price
1	2261	Cable	Battery with Clips	$ .65
2	1928	Cell	Bias 1.25 Volt	.22
3	2975	Coil	Antenna	2.10
4	2976	Coil	R. F.	2.20
5	2977	Coil	Oscillator	1.80
6	2959	Coil	1st I. F. Trans.	1.60
7	2957	Coil	2nd I. F. Trans. Complete Less Sel-Fid. Switch Assembly	1.80
8	9539	Choke	R. F. "A"	.45
9	2066	Choke	R. F. "B"	.28
10	2271	Choke	Filter	1.00
11	2978	Condenser	3 Gang Tuning	4.25
12	3060	Condenser	Dry Elec. (Dual 8 Mfd.)	1.15
13	3159	Condenser	Dry Elec. 4 Mfd. Tubular	.80
14	8876	Condenser	Dry Elec. 5 Mfd. Tubular	.85
15	1148	Condenser	Tubular 0.5 Mfd. 200 Volt	.40
16	9386	Condenser	Tubular .1 Mfd. 200 Volt	.19
17	9386	Condenser	Tubular .1 Mfd. 200 Volt	.19
18	9386	Condenser	Tubular .1 Mfd. 200 Volt	.19
19	9386	Condenser	Tubular .1 Mfd. 200 Volt	.19
20	9386	Condenser	Tubular .1 Mfd. 200 Volt	.19
21	9386	Condenser	Tubular .1 Mfd. 200 Volt	.19
22	9386	Condenser	Tubular .1 Mfd. 200 Volt	.19
24	9386	Condenser	Tubular .1 Mfd. 200 Volt	.19
25	9525	Condenser	Tubular .25 Mfd. 200 Volt	.24
26	1147	Condenser	Tubular .05 Mfd. 200 Volt	.19
27	1147	Condenser	Tubular .05 Mfd. 200 Volt	.19
28	1275	Condenser	Tubular .005 Mfd. 400 Volt	.18
29	1275	Condenser	Tubular .005 Mfd. 400 Volt	.18
30	1275	Condenser	Tubular .005 Mfd. 400 Volt	.18
31	9714	Condenser	Tubular .02 Mfd. 400 Volt	.18
32	1497	Condenser	Tubular .03 Mfd. 600 Volt	.19
33	2075	Condenser	Tubular .005 Mfd. 600 Volt	.18
34	3136	Condenser	Tubular .01 Mfd. 1200 Volt	.23
35	3136	Condenser	Tubular .01 Mfd. 1200 Volt	.23
36	9458	Condenser	Mica .00025 Mfd.	.21
37	9458	Condenser	Mica .00025 Mfd.	.21
38	9458	Condenser	Mica .00025 Mfd.	.21
39	1440	Condenser	Mica .002 Mfd.	.21
40	1628	Condenser	Mica .0045 Mfd.	.21
41	1441	Condenser	Mica .004 Mfd.	.21
42	1441	Condenser	Mica .004 Mfd.	.21
43	2969	Condenser	Trimmer (Assembly)	1.30
44	1054	Condenser	Padding (300-600 M.M.F.)	.55
45	1055	Condenser	Padding (800-1200 M.M.F.)	.55
46	2778	Resistor	Carbon 2 Meg. Ohm 1/3 Watt	.19
49	7998	Resistor	Carbon 1 Meg. Ohm 1/3 Watt	.19
50	6984	Resistor	Carbon 1/2 Meg. Ohm 1/3 Watt	.19
51	6984	Resistor	Carbon 1/2 Meg. Ohm 1/3 Watt	.19
52	6984	Resistor	Carbon 1/2 Meg. Ohm 1/3 Watt	.19
53	6984	Resistor	Carbon 1/2 Meg. Ohm 1/3 Watt	.19
54	8906	Resistor	Carbon 1/4 Meg. Ohm 1/3 Watt	.19
55	8000	Resistor	Carbon 100,000 Ohm 1/3 Watt	.19
56	6879	Resistor	Carbon 50,000 Ohm 1/3 Watt	.19
57	9693	Resistor	Carbon 5,000 Ohm 1/3 Watt	.19
58	2437	Resistor	Carbon 2,500 Ohm 1/3 Watt	.19
59	1152	Resistor	Carbon 400 Ohm 1/3 Watt	.19
60	6875	Resistor	Carbon 250 Ohm 1/3 Watt	.19
61	1336	Resistor	Carbon 20,000 Ohm 1/3 Watt	.19
62	1176	Resistor	Carbon 10,000 Ohm 1/3 Watt	.19
63	3061	Resistor	Flex. Wire Wound 15.4 Ohm 1 Watt	.19
64	3021	Speaker	P. M. Dynamic (6")	5.00
65	3022	Speaker	P. M. Dynamic (8")	6.00
66	3097	Speaker	P. M. Dynamic (10")	7.00
67	2961	Switch	Selectivity-Fidelity Complete with Arm and Connecting Link	1.05
68	2973	Switch	Band Selector	.80
69	1331	Transformer	Audio	1.40
70	3067	Transformer	Power	2.35
71	2965	Tone Control	With "On-Off" Switch	1.00
72	2966	Volume Control		.85
73	3069	Vibrator		4.50
74	2616	Resistor	Carbon 1 Meg. Ohm 1/3 Watt	.19
			MISCELLANEOUS	
	2758	Arm	Selectivity-Fidelity Mechanism	.10
	9023	Bulb	6.3 Volt .150 Amp. Dial Light	.19
	9063	Base	Tube Shield	.05
	2500	Cable	For 6G5 Tube Socket	.50
	2498	Clamp	For 6G5 Socket	.08
	3092	Rod	8-32x2-1/2" Threaded for Elim.	.05
	3070	Covers	Front and Back for Elim.	.35
	2422	Dial Assembly	Complete	4.25
	2423	Dial Scale	Calibrated Scale—Mention Name Required	.80
	2981	Dial Indicator	Band Indicator with Arm	.55
	2987	Glass	With Escutcheon	1.55
	2534	Knob	Marked "Tuning"	.30
	2444	Knob	Marked "Volume"	.30
	2732	Knob	Marked "Selectivity"	.30
	2445	Knob	Marked "Band Selector"	.30
	2535	Knob	Marked "Tone On and Off"	.30
	3083	Pointer	Dial	.15
	3059	Receptacle	6 Volt Attachment	.15
	1361	Shield	Tube	.15
	2953	Strip	Antenna and Ground	.25
	2528	Shell	Bakelite for 6G5 Socket	.09

©John F. Rider, Publisher

MODELS A9848, A9849
Chassis 68
Schematic

ALLIED RADIO CORP.

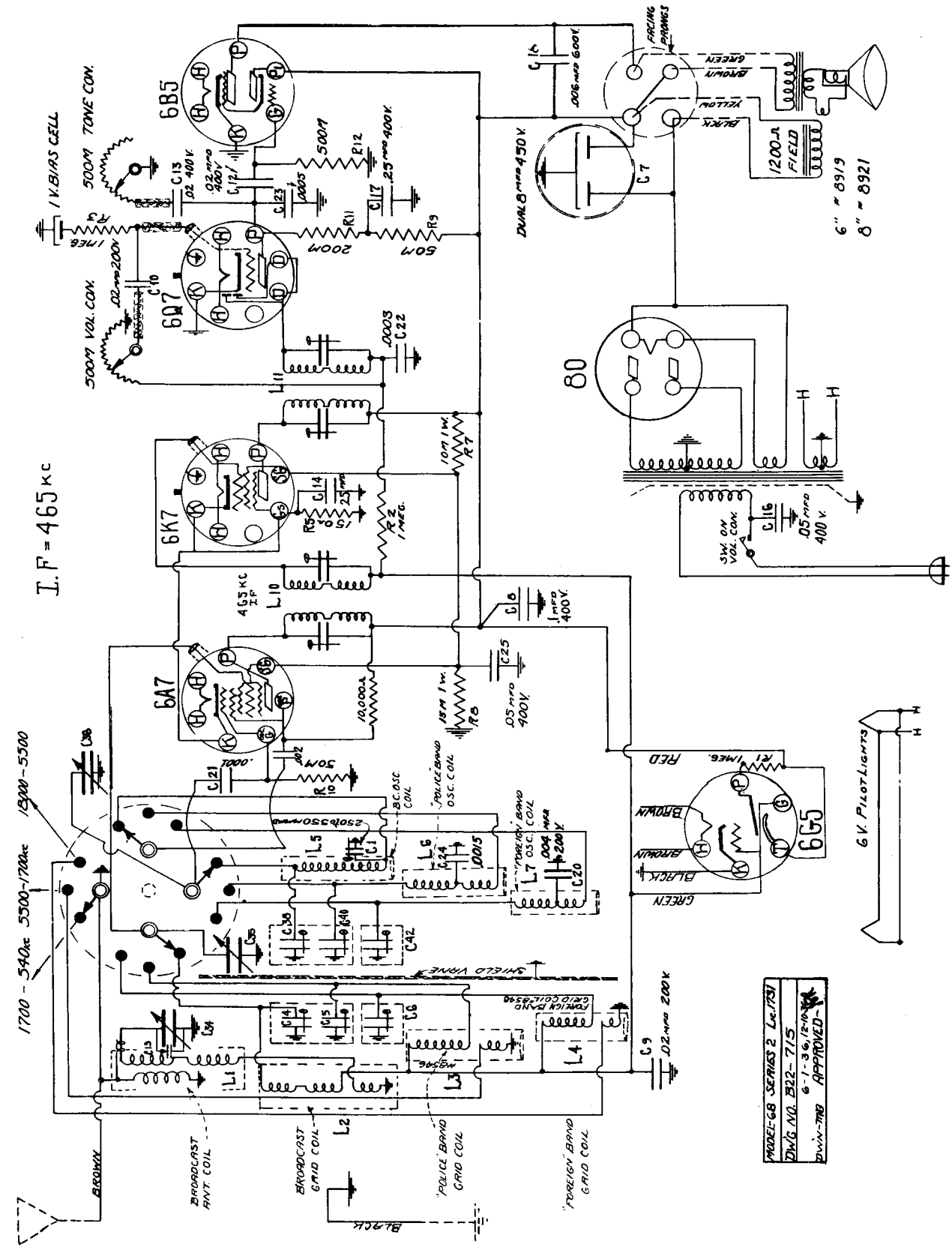

©John F. Rider, Publisher

MODELS A9848, A9848

Chassis 266, 268
Schematics

ALLIED RADIO CORP.

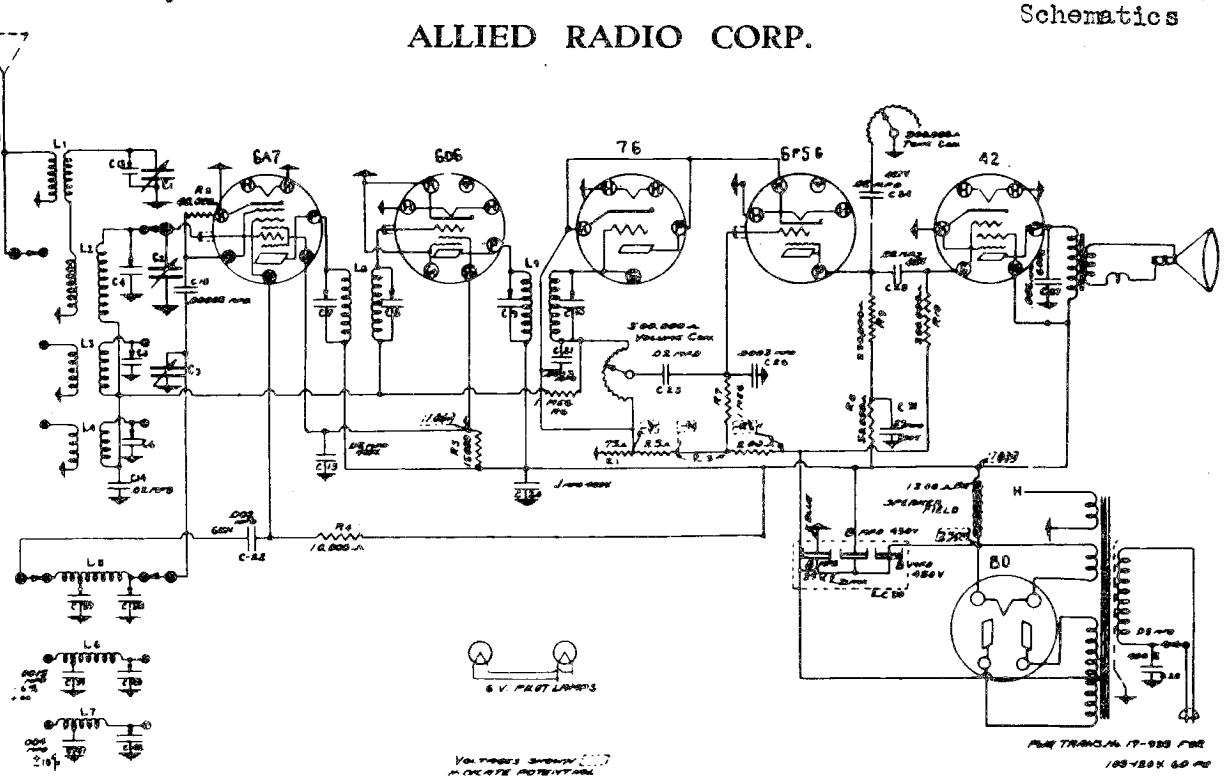

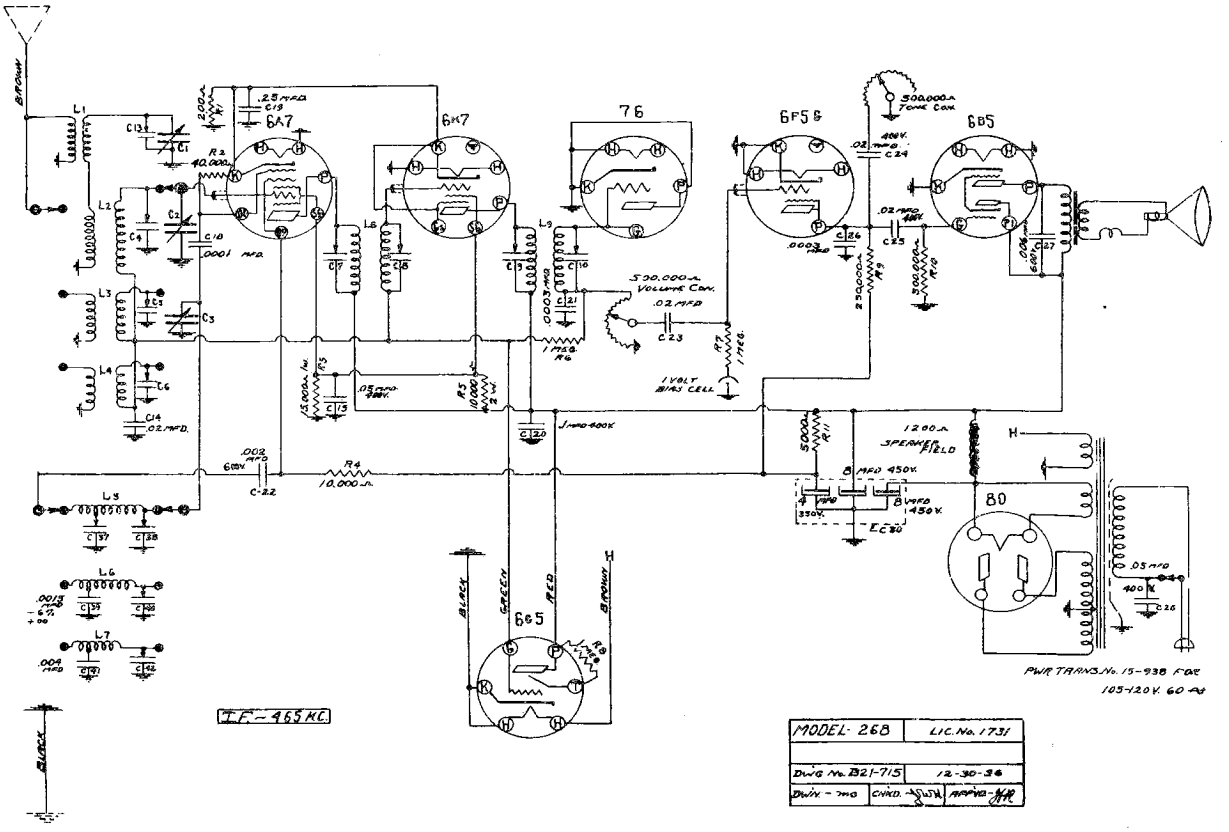

©John F. Rider, Publisher

Chassis 68,266,268
Trimmers
Chassis 68
Socket, Voltage

ALLIED RADIO CORP.

MODELS A9848, A9849

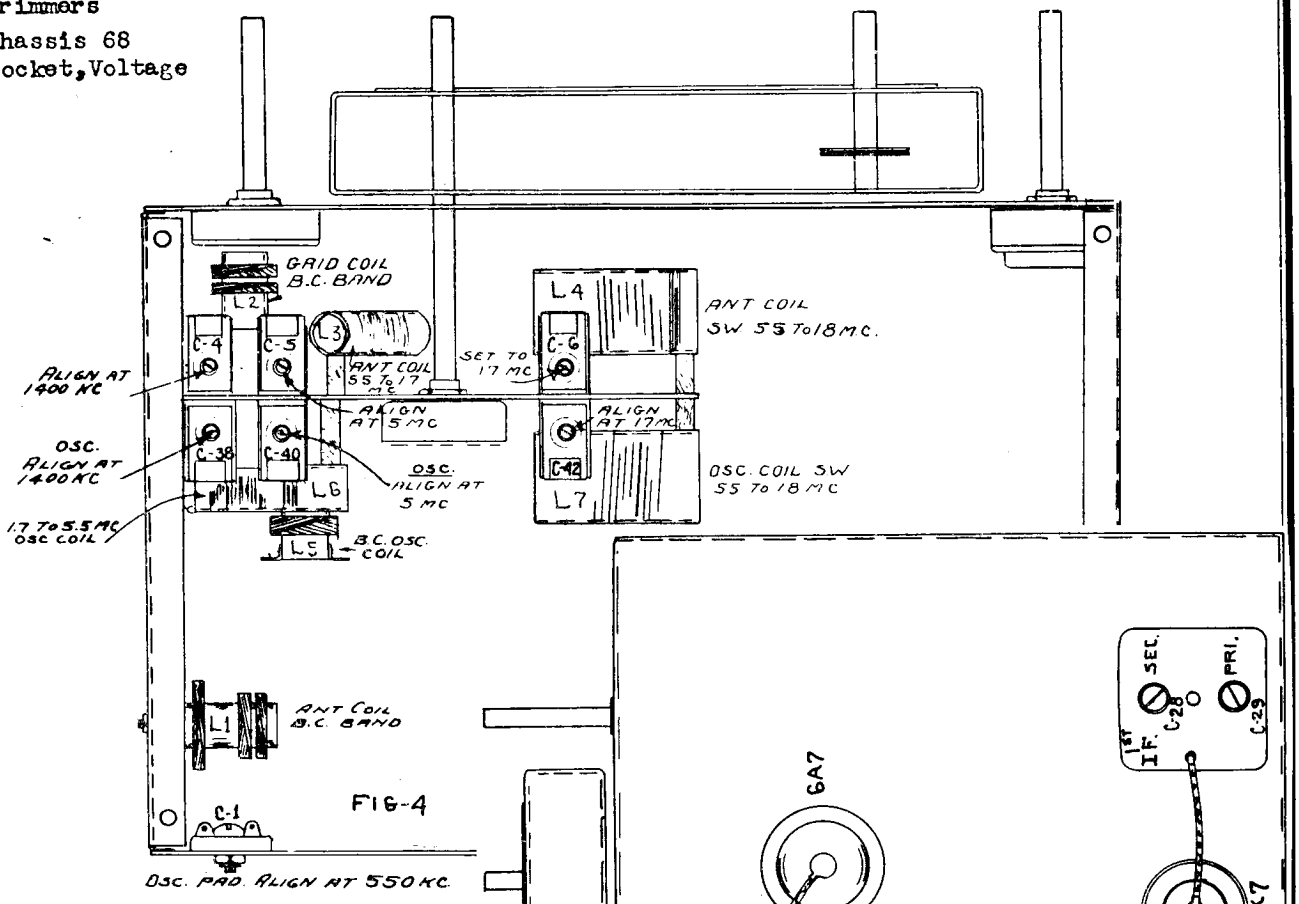

FIG-4

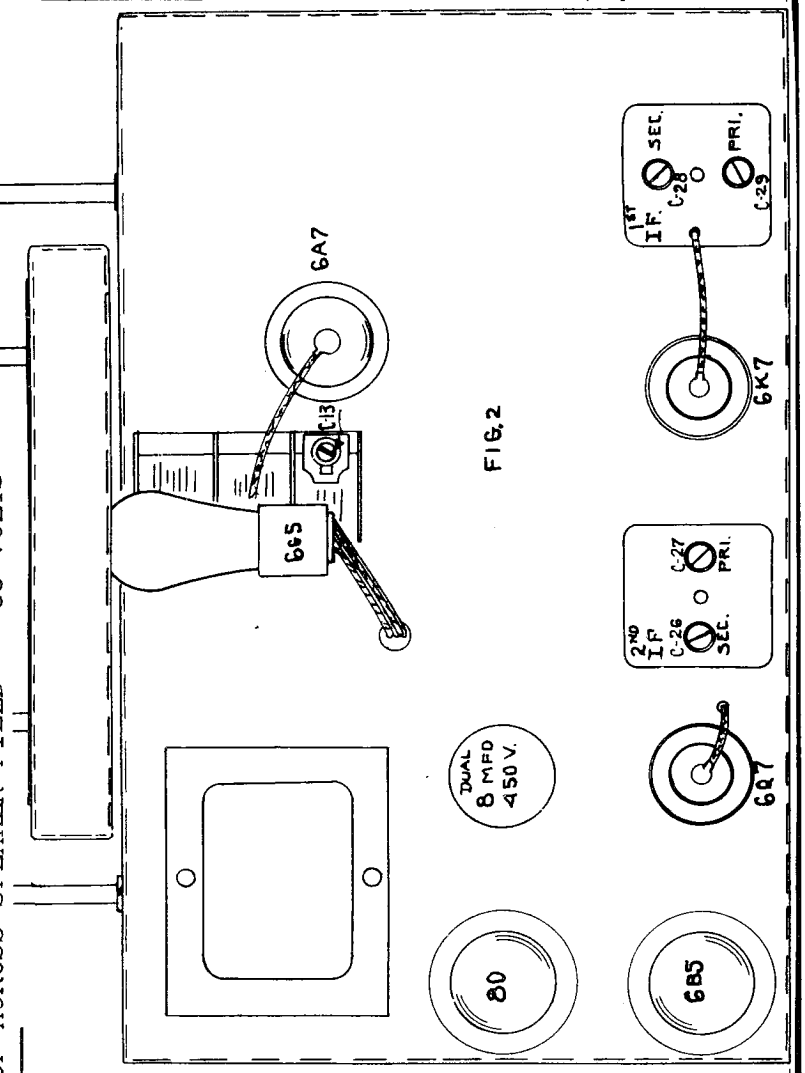

FIG. 2

TUBE	PLATE	CATHODE	S.G.	OSC. PLATE
6A7	230	2½	98	180 V.
6K7	230	2½	98	-
6Q7	35	-	-	-
6B5	220	-	-	P.1 235
6G5	Target 235	-	-	-
80	H.V. OFF FILAMENT 320 VOLTS DROP ACROSS SPEAKER FIELD 85 VOLTS			

VOLTAGE READINGS TAKEN FROM GROUND
WITH LINE VOLTAGE AT 115 VOLTS
NO SIGNAL IN ANTENNA

©John F. Rider, Publisher

The following alignment instructions are given with the assumption that the Service Station has a signal generator capable of accurately covering the range of the receiver.

The only other apparatus necessary is a meter connected in the output stage to indicate resonance. This can be an 0 to 3 Volt AC meter connected across the voice coil of the speaker of preferably an output meter connected in the plate circuit of the power tube in series with an 8 Mfd. paper condenser.

I. THE I.F. STAGES

The intermediate frequency stages are aligned in the usual manner by feeding 465 K.C. into the grid of the mixer tube 6A7.

The two trimmers in each of the I.F. cans should be very carefully peaked to resonance as they are very critical and will greatly affect the performance of the set. These are trimmers Nos. C-26,27, 28, 29 on Figure 2.

Always use as low an output as possible from the signal generator when making the various adjustments.

The sensitivity of the I.F. system alone will be found to be between 15 and 20 Microvolts.

II. ALIGNMENT OF THE SHORT WAVE BAND 5.5 TO 18 M.C.

First check the position of the dial hand by rotating the variable condenser to full capacity. The hand then should be in line with the lines that divide the dial in half. If the hand is off position it can be lined up by loosening the center screw.

1. Turn band switch all the way to the right for the 5.5 to 18 M.C. Band (Yellow), and set dial hand to 17 M.C.
2. Refer to Figure 3 and with a 17 M.C. signal from the generator, peak oscillator, trimmer condenser C-42 to 17 M.C.
3. Adjust trimmer C-6 of the antenna circuit to 17 M.C. after the above mentioned oscillator trimmer has been set.

III. ALIGNMENT OF SHORT WAVE BAND 1.7 TO 5.5 M.C.

1. With the band switch in the middle position, (Blue) and the dial hand set to 5 M.C., peak trimmer C-40 of the oscillator circuit to 5 M.C.
2. Adjust Antenna stage trimmer C-5 to 5 M.C. after the above oscillator trimmer has been set.

NOTE: After adjusting the two high bands at 17 megacycles and 5 megacycles the test oscillator input to antenna should be increased and receiver dial advanced to .9 megacycle lower and note if test oscillator signal is heard.

In case there is no response, the oscillator trimmers have been pulled down too tightly. The trimmers should be released until this condition exists, then go back to original point of alignment - reduce antenna input voltage and correct the trimmer adjustment.

EXAMPLE: The receiver has been adjusted to 17 megacycles. Tune receiver to approximately 16.9 M.C.

Increase oscillator signal by "opening up" the attenuator. Move the dial back and forth at 16.9 M.C.

If no signal is heard, let oscillator trimmer off until it is heard at 16.9 M.C.

Reduce signal voltage from generator, go back to 17 M.C. and slightly correct this last trimmer adjustment.

The same thing applies to the 5 M.C. adjustment.

IV. THE ALIGNMENT OF THE BROADCAST BAND

1. Set Band Switch to the 550-1700 K.C. band, and the hand to 1400 K.C.
2. Peak oscillator trimmer C-38 to 1400 K.C., then the R.F. Trimmer C-4 and the antenna stage trimmer C-13 on the variable condenser to 1400 K.C.
3. Rotate dial hand to 550 K.C. and adjust padding condenser C-37 to 550 K.C.
4. Re-check dial at 1400 K.C. as mentioned in (1) and (2).
5. Points in the middle of the dial may be checked and if necessary the plates of the oscillator section of the variable condenser (back section) may be bent for alignment.

V. NOTES

1. Seal all trimmers after their final adjustment.
2. Be sure that the settings are being made to the true fundamental signal from the oscillator and not on a harmonic or image frequency.
3. The normal voltage readings at the sockets are given in a separate chart on the following pages.
4. It is advisable to check the position of the tuning eye tube to make certain that it is not pushed against the inside of the dial card. With the adjustment screw on the bracket, allow a small amount of clearance between the end of the tube and the dial to avoid any possibility of the heat from the tube affecting the dial card.

©John F. Rider, Publisher

ANDREA RADIO CORP.

MODELS 1C5,2C5,510,511
Chassis C5L,C5S,UC5L,UC5S
Schematic,Coils,
Parts

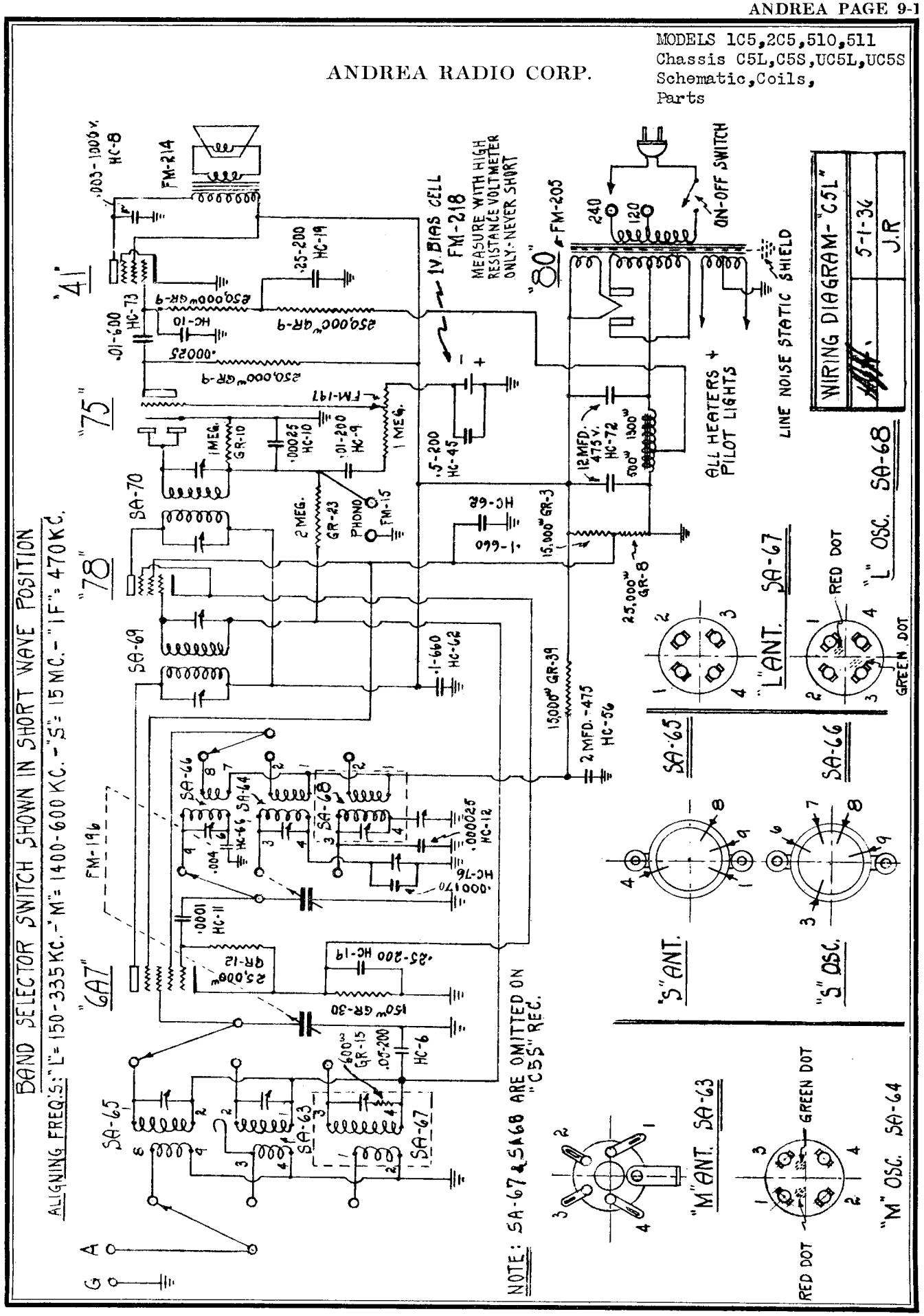

©John F. Rider, Publisher

©John F. Rider, Publisher

MODELS 1C5, 2C5, 510, 511.
CHASSIS C5L, C5S, UC5L, UC5S.

SERVICE DATA

INSTRUCTIONS FOR INSTALLING FM-205 POWER TRANSFORMER IN ANDREA RADIO MODELS 1C5, 2C5, AND CHASSIS C5S, C5L.

Original production of receiver models 1C5, 2C5, chassis C5L, C5S, incorporated a two (2) tapped primary transformer for 120 or 240 volt, 50/60 cycle power lines. The voltage regulator socket used was of five (5) prongs with only two (2) of the five (5) prongs (marked 120-240) used.

Later production of these models used a four (4) tapped primary transformer in place of the above two tap unit. On these later models the voltage regulator socket was marked 100-120-150-220-250. Positions 100 and 120 were joined together.

All transformer replacement shipments will be of the four (4) tapped type FM-205. In receivers which are equipped with two (2) tap units and replacement is made with a four (4) tap FM-205, use ONLY the two taps needed, taping the extra two taps to eliminate short circuits. For convenience, all four taps may be wired up to the voltage regulator socket in such a manner as to have equivalent primary taps correspond to the socket marking.

The line voltage variation through which each primary tap may be used is as follows:

TAP	LINE VOLTAGE RANGE
120	105-130
150	135-160
220	205-230
250	235-260

The following is the color coding of the transformer primary taps:

ORIGINAL TWO TAPPED FM-205	PRESENT PRODUCTION FOUR TAPPED FM-205
Primary tap 120 - red & white tracer.	Primary tap 120 - red & yellow tracer
" " 240 - green	" " 150 - yellow
" Line - red	" " 220 - brown
	" " 250 - green
	" Line - red

The design of this receiver is such that one band can be aligned regardless of order without disturbing the alignment on the other bands.

WARNING: Models 510, 511, Chassis UC5L and UC5S receivers are of the Universal type (AC or DC), hence the receiver chassis is at line potential. A ground wire must never be attached to the chassis directly, or damage to the receiver may result.

If the signal generator is grounded, be certain no direct connection is made to the receiver proper on Models 510 and 511. The antenna and ground leads of the receiver are isolated by means of condensers in the receiver. (see circuit diagram)

ALIGN	FREQUENCY	DUMMY ANT.	TUBE	SWITCH
I.F.	470KC	.1 MFD.	6A7(grid)	--
"S"	15,000 KC	400 OHMS	--	RIGHT
"M"	1400 KC	.00025 MFD.	--	CENTER
"M"	600 KC	.00025 MFD.	--	CENTER

I.F.
High potential lead in series with .1 mfd. condenser to grid of 6A7 tube.
Adjust trimmers on first and second I.F. transformers, to maximum output.
"S" (Short Wave)
Signal generator high potential lead in series with 400 ohm resistor to reciever antenna lead (RED). Receiver Ground wire to low side of signal generator output. Adjust antenna coil trimmer for maximum output.
"M" (Medium Wave)
Replace 400 ohm resistor with .00025 mfd. condenser. Set signal at 1400 KC. Adjust antenna shunt trimmer to maximum output.
With connections as for 1400 KC, set signal generator at 600KC. Adjust "M" oscillator series trimmer to maximum output (rotate gang condenser back and forth). Recheck adjustment at 1400KC as before.
"L" (Long Wave) This band included only in UC5L and C5L Chassis.
With signal at 150KC, .1 mfd condenser as dummy antenna, connection to 6A7 grid as in previous adjustments; adjust L.W. series oscillator trimmer to LOUDEST output signal.
Set generator at 335 KC. Adjust L.W. oscillator shunt trimmer to signal and readjust.
Set dial and generator at 150 Kc. Readjust L.W. series oscillator trimmer as before. Then repeat at 335KC as before.
Adjust antenna coil shunt trimmer for maximun output.
Then adjust L.W. series oscillator trimmer with dial and generator at 150 KC for maximum output. Repeat adjustment of antenna coil shunt trimmer for maximum output. Repeat adjustment of L.W. series oscillator trimmer with dial and generator at 150 KC.
Repeat these last two adjustments until the alignment is no longer improved.

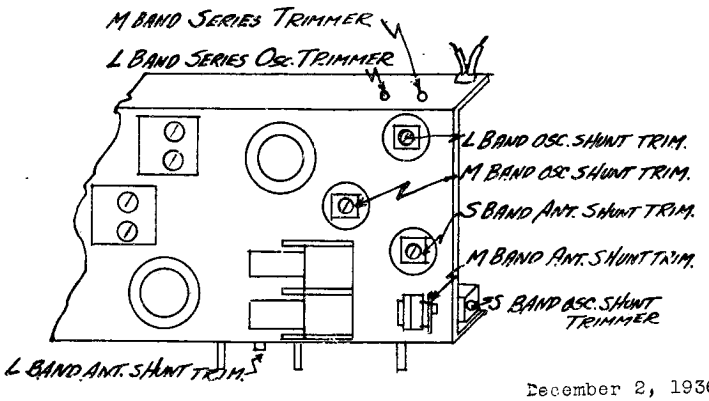

December 2, 1936.

WARNING: These Receivers incorporate a I volt bias electrolytic cell in the 75 tube grid circuit.

Current must never be taken from this cell. All measurements must be made with a high resistance voltmeter. NEVER SHORT.

Be certain the 75 tube cap does not touch the chassis for any length of time.

ANDREA RADIO CORP.

MODELS 1B8,2B8
Chassis B8L,B8S
Schematic,Trimmers
Alignment,Parts

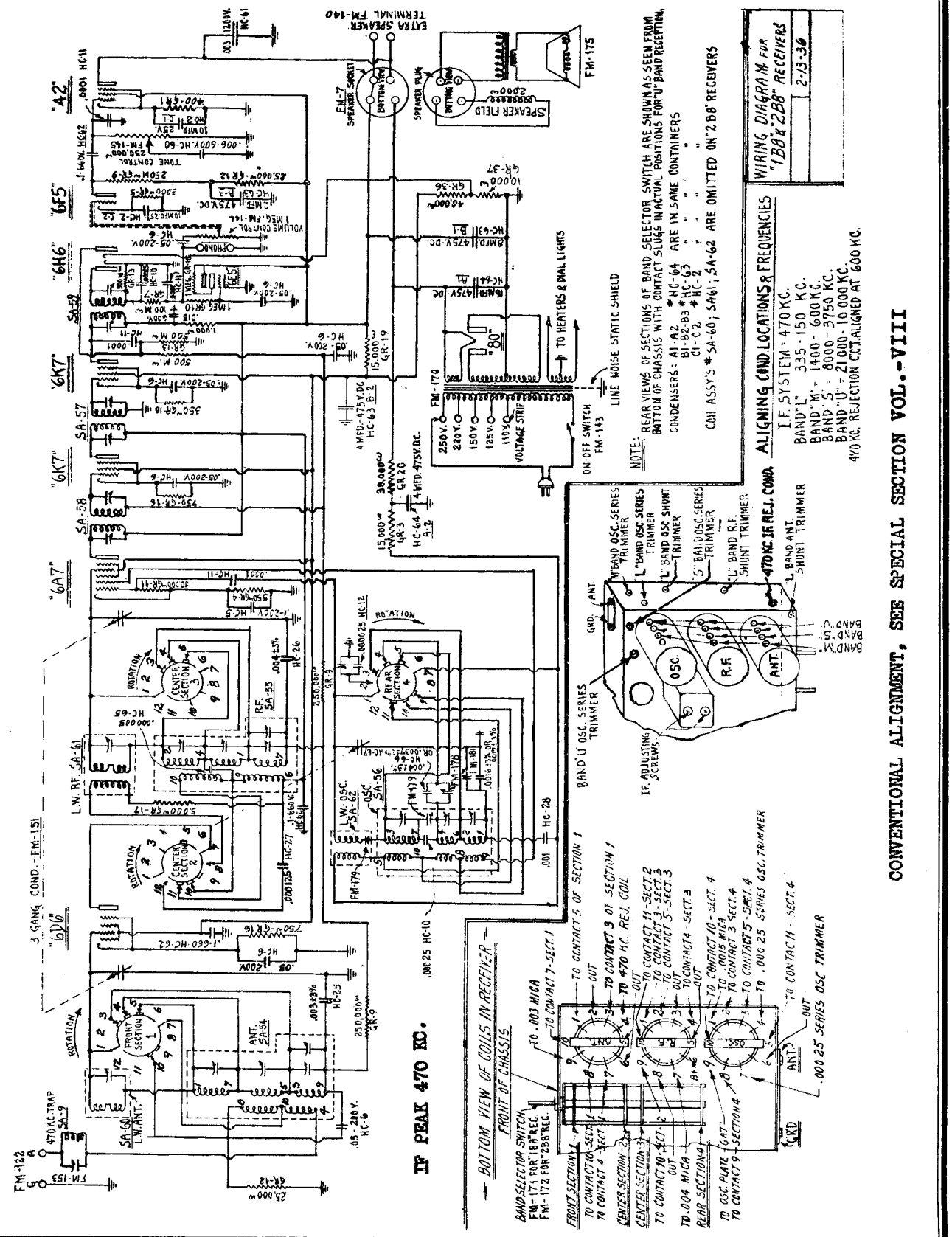

©John F. Rider, Publisher

MODELS 1D8,3D8,5D8,7D8
Chassis D8L
MODELS 2D8,4D8,6D8,8D8
Chassis D8S

ANDREA RADIO CORP.

Schematic,Trimmers,
Alignment,Parts,Coils

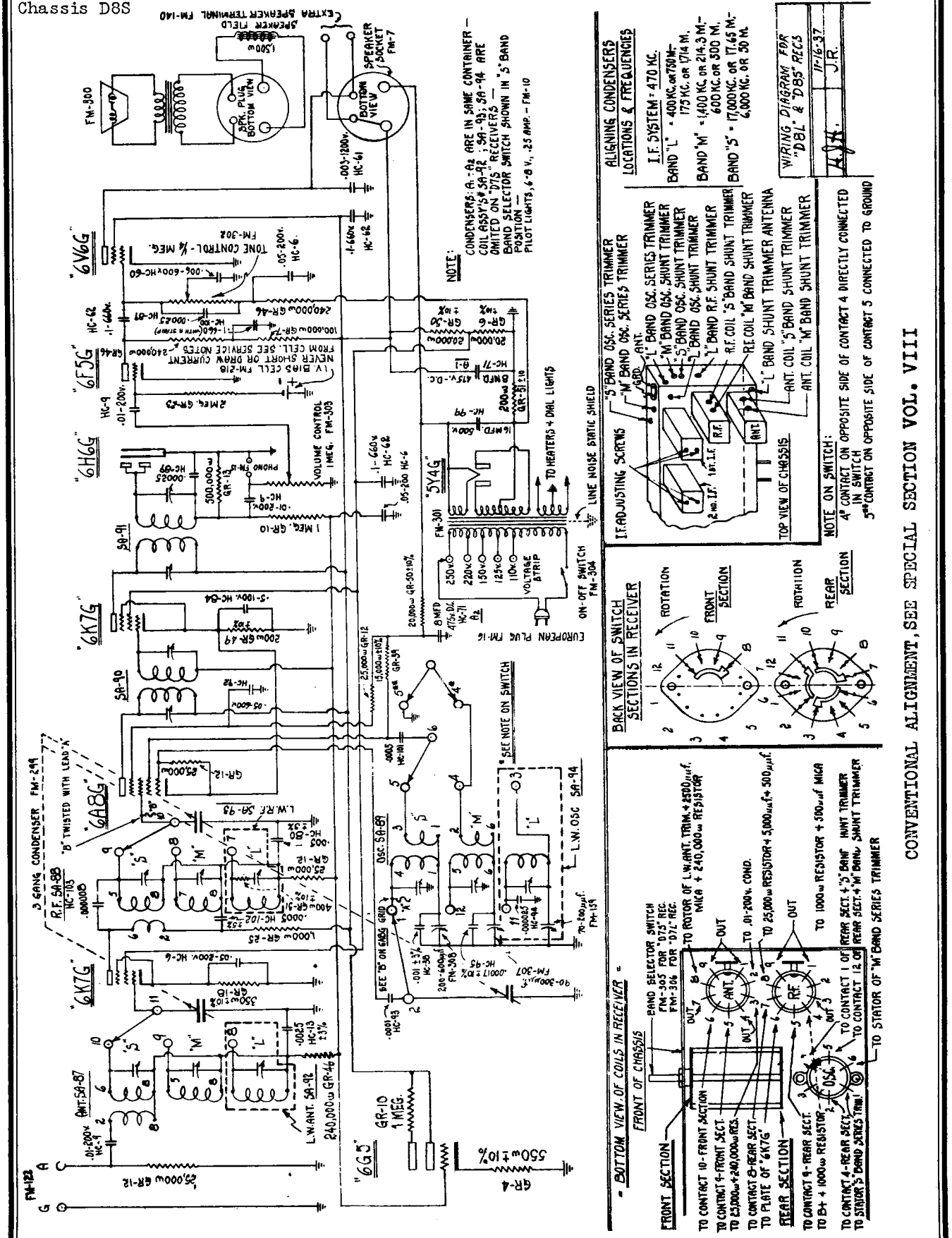

©John F. Rider, Publisher

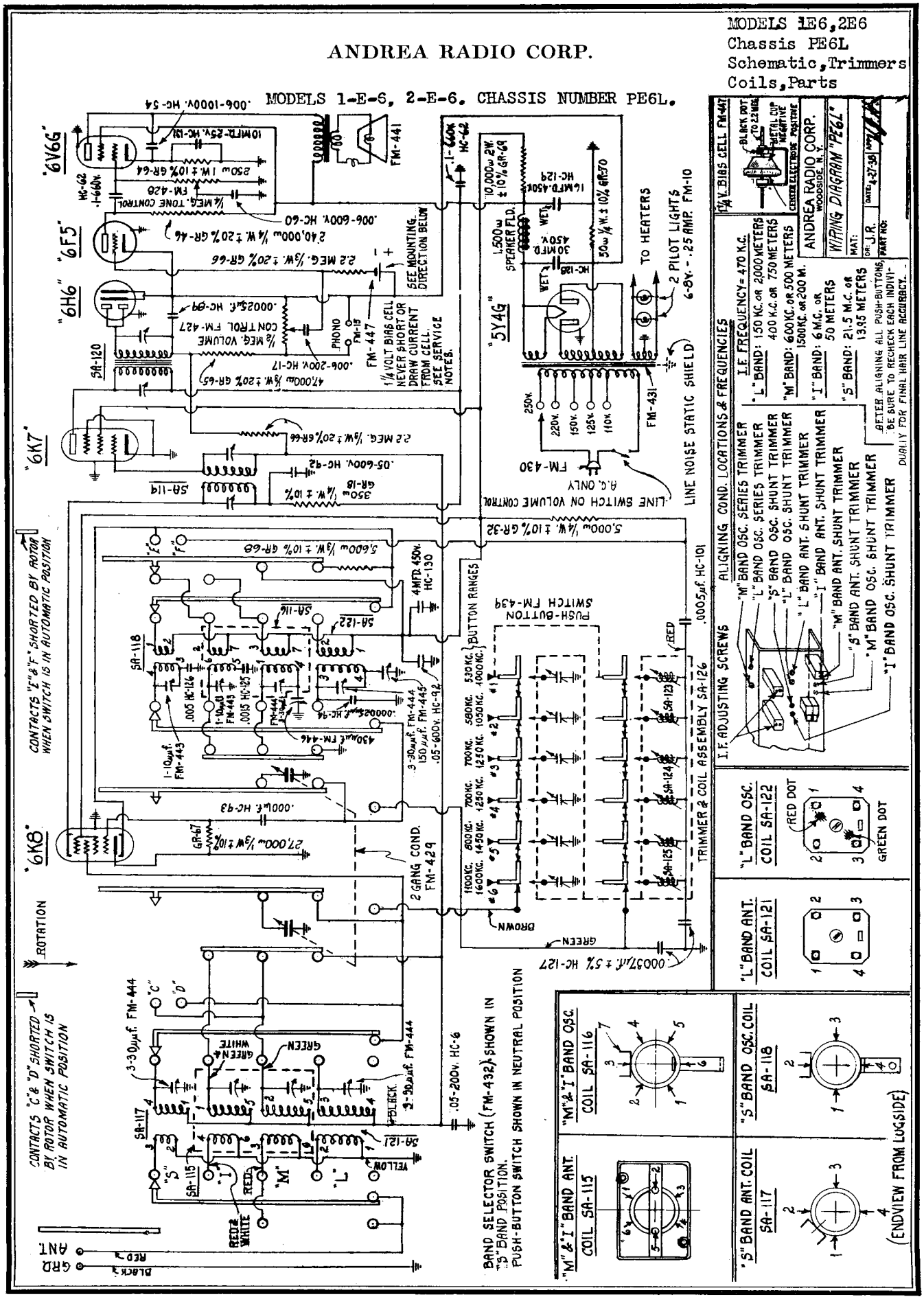

©John F. Rider, Publisher

MODELS 1E6,2E6
Chassis PE6S
Schematic,Trimmers
Coils,Parts

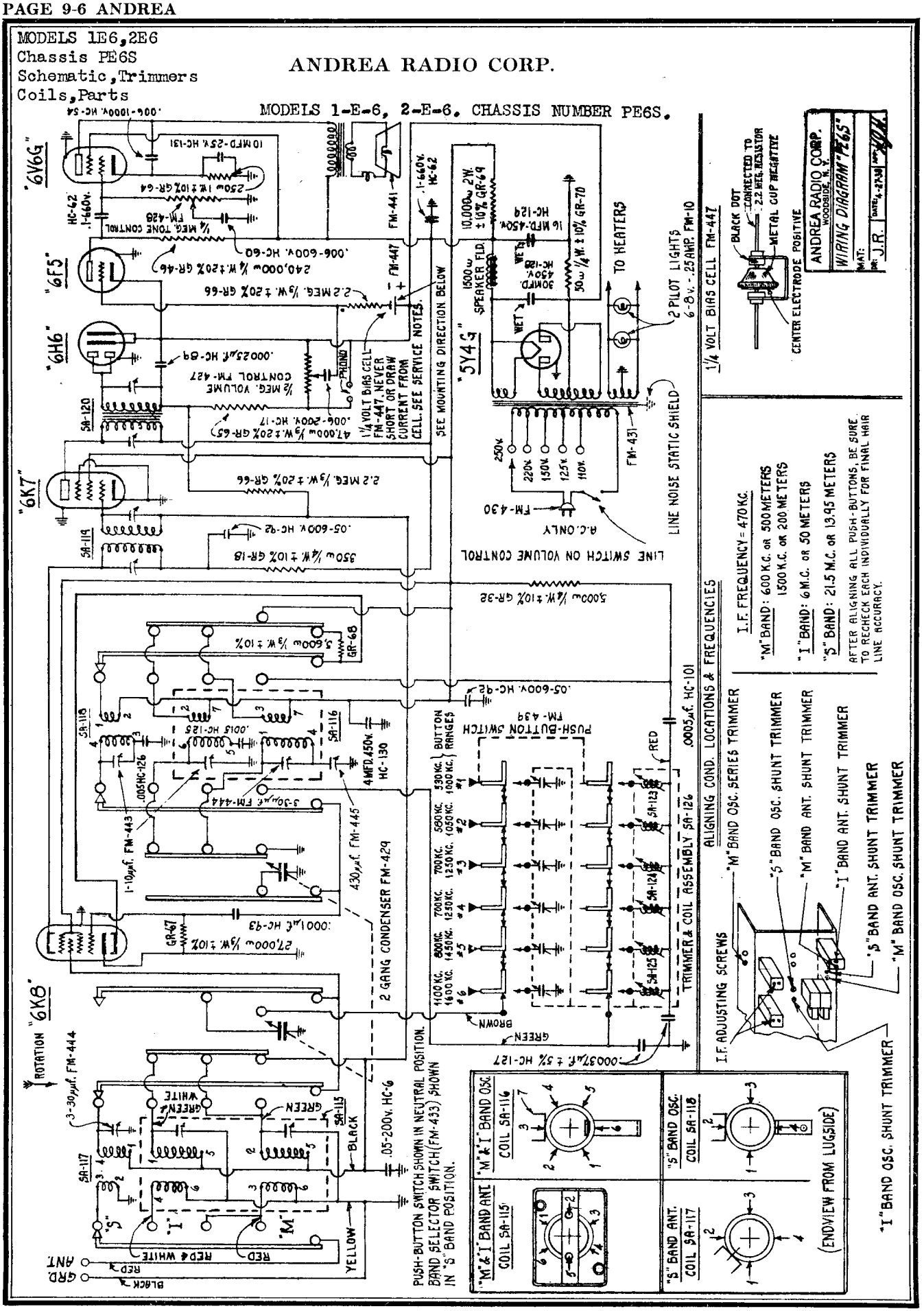

©John F. Rider, Publisher

Alignment, Tuner

MODELS 1E6, 2E6
Chassis PE6L, PE6S
MODELS 630, 631
Chassis PUE6L, PUE6S

ANDREA RADIO CORP.

Andrea Radio

STANDARD TUNING
AC Model **2-E-6**

LONG WAVE TUNING
AC Model **1-E-6**

(Chassis Numbers PE6L and PE6S)

SERVICE DATA

LONG WAVE TUNING		STANDARD TUNING	
AC Model **1-E-6**	AC-DC Model **631**	AC Model **2-E-6**	AC-DC Model **630**
12.5-39.5 m.	24- 7.6 mc.	12.5-39.5 m.	24- 7.6 mc.
38.5- 133 m.	7.8-2.25 mc.	38.5- 133 m.	7.8-2.25 mc.
179- 579 m.	1720- 520 kc.	179- 579 m.	1720- 520 kc.
720-2060 m.	415- 146 kc.		

Universal Voltage Taps: AC models have taps for 100-120, 115-135, 140-160, 210-230, and 240-260 volts. AC-DC models have taps for 95-110, 110-130, 140-160, 210-230, and 240-260 volts. **AC Frequency:** AC models operate on 50-60 cycles. AC-DC models operate on 40-60 cycles.

470 KC. I. F. ALIGNMENT

Connect the high-potential lead of the signal generator in series with a .1 mfd. condenser to the grid of the 6K8 tube. Set the generator at 470 kc., and adjust the output until a small deflection is obtained in the output meter. Adjust the trimmer condensers on the top of the 1st and 2nd I.F. transformers (see circuit diagram) for maximum deflection on the output meter. After this adjustment has been made, disconnect the generator from the grid of the 6K8 tube. This completes the alignment of the I.F. system.

"S" BAND ALIGNMENT

Connect the high-potential lead from the generator in series with a 400-ohm resistor to the antenna (red) lead of the set, and the low side of the generator to the ground (black) lead of the set. Put the wave band switch at the S position, adjust the generator to 21,500 kc., and the receiver to 21.5 mc. Vary the S band oscillator shunt trimmer slowly from maximum to minimum. You will hear the signal at two settings of the trimmer, one nearer the minimum capacity (plates open) and one near the maximum capacity (plates closed). The setting near minimum capacity is correct, because the setting near maximum capacity is at the image frequency.

Now adjust the antenna shunt trimmer. During this adjustment, be sure to rock the gang condenser back and forth slowly each time you make an adjustment of the trimmer. As you continue to do this, you will reach a point where further turning of the trimmer screw, while rocking the gang condenser, will not increase the signal response. This is the correct adjustment.

A simple method of determining if the receiver and generator are tuned for correct alignment is as follows:

Set the signal generator at 21,500 kc. and tune the receiver slowly from 20,000 to 22,500 kc. Two signals should be heard, 940 kc. apart. One will be lower in frequency than 21,500 kc. and the other will be higher. The higher frequency, as indicated on the dial, is the correct aligning frequency, and the lower one is the image.

As a further check, leave the receiver tuned to the higher frequency. Very slowly, increase the generator frequency from 21,560 kc to about 22,500 kc.

A signal will be heard near 22,500 kc. if all the settings are correct for alignment. If there is no signal, the original settings were on the image frequency. In that case, you must start again from the beginning, in order to be sure of accurate results.

After you have found the correct settings, the image, or lower, frequency response on the receiver will always sound weaker than the true signal.

"I" BAND ALIGNMENT

With the signal generator connected in accordance with the preceding instructions, set the generator at 6,000 kc., turn the wave band switch to the I position, and adjust the dial to 6 mc. Following the procedure just described, adjust the I band oscillator shunt trimmer for maximum signal response. Next, adjust the I band antenna shunt trimmer. Rock the gang condenser back and forth slowly as you adjust the trimmer, in accordance with the instructions for the S band adjustment. This completes the adjustment for the I band.

"M" BAND ALIGNMENT

Replace the 400-ohm resistor in the generator lead by a .00025 mfd. condenser. Set the generator at 1,500 kc., turn the wave band switch to the M position, and set the dial of the receiver at 200 m. Adjust the M band oscillator shunt trimmer for maximum signal response. Next adjust the antenna shunt trimmer for maximum response.

This band must be aligned at 600 kc. also. Set the generator accordingly, and tune the receiver to 500 m. Adjust the M band oscillator series trimmer for maximum response. During this adjustment, be sure to rock the gang condenser for each small change of capacity of the series trimmer. When this adjustment has been completed, recheck the antenna adjustment at 1,500 kc. This completes the adjustment of the M band.

"L" BAND ALIGNMENT

Models 1-E-6 and 631, as well as chassis PE6L and PUE6L, have the long wave band also, as indicated by "L" on the wave band switch.

Connect the high-potential lead from the generator in series with a .1 mfd. condenser to the grid of the 6K8 tube. Set the generator at 150 kc. and the receiver at 2,000 m. Turn the wave band switch to the L position. Adjust the L band series oscillator trimmer for maximum response. This adjustment is required because of the wide frequency range obtained by adjusting this series oscillator trimmer. Due to this wide change in frequency, it is possible that a response will be obtained at several points, but the correct setting is indicated by maximum response.

Next, set the generator at 400 kc. and the receiver at 750 m., and adjust the L band oscillator shunt trimmer for maximum response. When this has been done, it is necessary to reset the generator at 150 kc., the receiver at 2,000 m., and to readjust the L band series oscillator trimmer in accordance with the preceding instructions.

Now, set the generator at 400 kc., the receiver at 750 m., and repeat the adjustment of the L band oscillator shunt trimmer for maximum response.

Without changing the settings of the generator and receiver, remove the generator lead from the grid of the 6K8, replace the .1 mfd. condenser with a .00025 mfd. condenser, and connect the lead to the antenna wire on the set. Adjust the L band antenna shunt trimmer for maximum response.

Next, set the generator at 150 kc., the receiver at 2,000 m., and align the L band series oscillator trimmer for maximum response. Be sure to rock the gang condenser for each adjustment of the trimmer.

Finnally, set the generator at 400 kc., the receiver at 750 m., and readjust the L band antenna shunt trimmer. This completes the adjustment of the L band.

BIAS CELL

This receiver incorporates a bias cell in the grid of the audio tube, as shown in the wiring diagram. In case you remove the cell, handle it with the greatest care. Do not put your fingers across the terminals, for this will have the effect of short-circuiting the electrodes, and the voltage will not return to normal for several hours.

NEVER test this cell with an ordinary voltmeter. Since this a "no-current" cell, the only way to test it accurately is with a vacuum tube voltmeter. Always insert the cell in the mounting assembly so that the metal container (negative side) contacts the cell-holder pin with the black dot. This cell can be expected to render at least three years' service before it requires replacement.

SETTING BUTTON CONTROLS

Make a list of the stations: Set down the call letters of the six stations required, and put them in the order of their kilocycle ratings, the lowest at the top of the list. The kilocycle tuning ranges of the button controls are:

TOP BUTTON	No. 1 —	530 to 1,000 kc.
	No. 2 —	580 to 1,050 kc.
	No. 3 —	700 to 1,250 kc.
	No. 4 —	700 to 1,250 kc.
	No. 5 —	800 to 1,450 kc.
BOTTOM BUTTON	No. 6 —	1,100 to 1,600 kc.

It is necessary, of course, to choose stations whose kilocycle ratings come within these button tuning ranges. The ranges given in the list above are conservative. Consequently, it may be possible to tune in a station which is just outside the range of any particular button control. For example, on button No. 3, although the range is shown as 700 to 1,250 kc., it may be possible to tune a station on 600 kc. or one on 1,300 kc.

MARKING THE BUTTONS

Remember the transparent disks: When you have made up your station list, locate the call letters on the station-call marker sheets, and punch them out carefully. If lettered markers are not provided for the stations you want, use the blank markers, and print the station letters on them.

Keeping the markers in the same order as your kilocycle list, press them into buttons, starting at the top. Do not attempt to glue them in place. Instead, put a transparent disk over each marker. That will hold it in place permanently. Use the end of a lead pencil to press the disks into position. In case you want to change a marker, you can pry it out with the point of a pin.

ADJUSTING THE CONTROLS

Do this with great care: Put the wave band switch in the M position, for dial tuning on the broadcast or medium band. Tune in the station whose call letters you have put on the top button. When you have adjusted the tuning accurately, turn the wave band switch to position A. Push in the top button until it locks, and turn the volume control to maximum.

When the set has been turned on for at least 10 minutes, so that it has become thoroughly warm, remove the rear dust cover from the cabinet. You will then see that the button controls are arranged in pairs, numbered 1 to 6. In each pair, the antenna adjustment (ANT.) is at the left, and the oscillator adjustment (OSC.) adjustment at the right.

Use a thin-blade screwdriver to adjust the screws. Do not force a thick blade into the slots. First adjust the No. 1 oscillator screw until you hear the station you tuned in previously with the dial. If the speaker breaks into a howl during this adjustment, turn the No. 1 antenna screw to the right or left until the howl stops. After you have an accurate setting of the oscillator screw, adjust the No. 1 antenna screw for maximum volume.

Finally, for a still sharper setting, cut the volume so that you can barely hear your station. If necessary, disconnect the antenna lead and twist it lightly around the insulated portion of the red wire. Again, adjust the No. 1 oscillator and antenna screws for maximum response from your station.

To check the accuracy of the settings, turn the wave band switch to position M. The station should sound practically the same whether the switch is in the A or M position. If there is considerable difference, the station was not tuned accurately with the dial or else the corresponding button controls were not set correctly.

Repeat the same routine for button No. 2, adjusting the No. 2 oscillator and antenna screws, and continue the process in the same way for the other controls.

To change any button to another station, if the station's kilocycle rating is within the range of the corresponding controls, it is only necessary to put in a new button marker, and to reset the controls in accordance with the preceding instructions.

FINAL ADJUSTMENT

After the preliminary adjustments have been made carefully and accurately, go over each one again, starting from the beginning, and follow the same order. This is essential, in order to assure absolute accuracy of the settings.

After all adjustments have been made, replace the dust cover on the rear of the cabinet, and make sure that the antenna is connected again.

IMPORTANT!

If you find it necessary to replace any part in this receiver, bear this in mind: In order to maintain the high performance standards of Andrea Radio receivers, the components parts on all Andrea models are held to exceedingly close tolerance limits. Furthermore, Andrea components are given the exclusive "Climate Sealed" treatment which protects them from all weather and temperature conditions. Consequetly, standard Andrea Radio replacement parts must be used for all service work, for the substitution of ordinary, stock items will result in inferior performance.

©John F. Rider, Publisher

©John F. Rider, Publisher

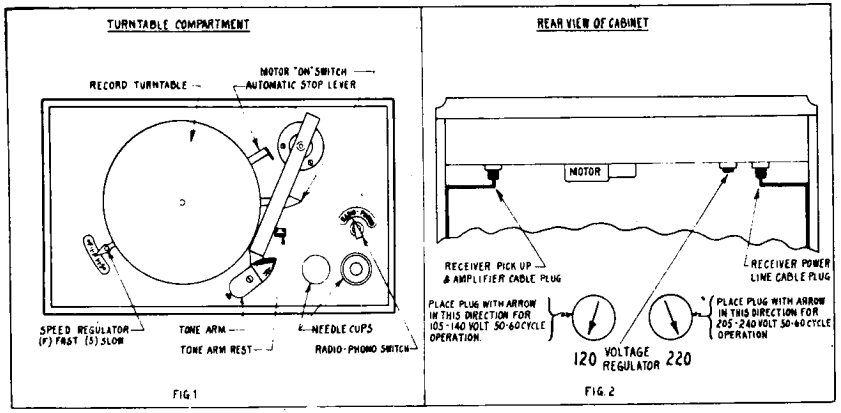

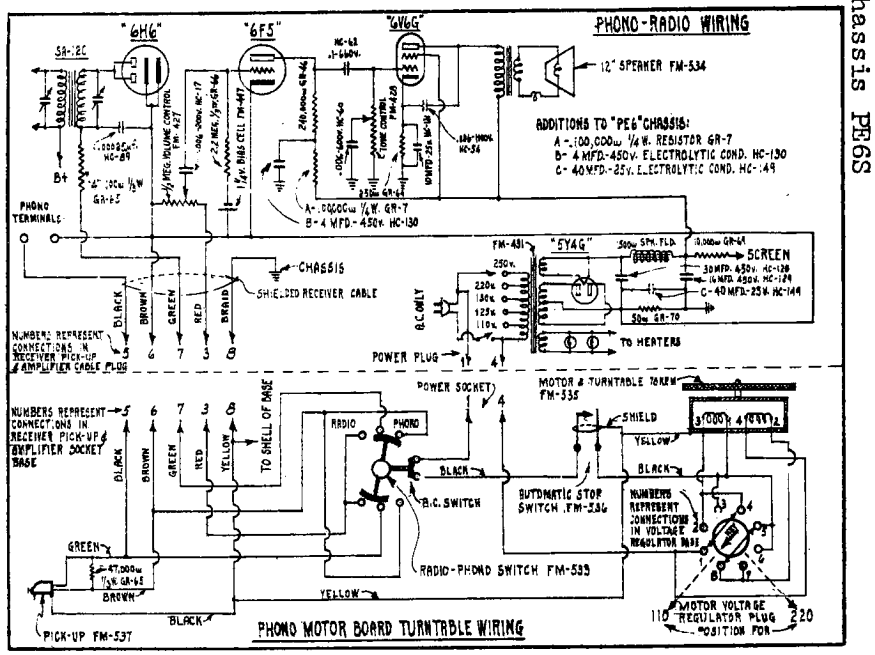

INSTRUCTIONS FOR INSTALLING AND OPERATING ANDREA AC PHONOGRAPH MODELS MODELS 5-E-6 AND 6-E-6

WARNING!

For protection in shipping, the radio chassis of this combination is bolted tightly to the shelf on which it is mounted. Before connecting this instrument to the power line, loosen the four mounting bolts, located under the shelf by turning them out about 6 turns, in order that the chassis can float freely on the shock-absorbing strips. Unless this is done, objectionable noises may be set up in the loud speaker.

MOTOR VOLTAGE:

Andrea phonograph combinations are connected at the factory for use on 205-240 volts, 50-60 cycles. Under the mounting shelf there is a socket with a plug, shown in Fig. 2. When the arrow on the plug points toward 120 volts, the motor can be used on 105 to 140 volts AC. When the arrow points toward 220 volts, the motor can be used on 205 to 240 volts, 50-60 cycles. To change the connections, remove this motor - voltage regulator plug, and turn it so that the arrow points toward the voltage required, and insert the plug again.

RECEIVER VOLTAGE:

Note that the motor voltage regulator plug does not control the radio receiver. Therefore, you must be sure to have the service man check the line voltage tap on the radio receiver power transformer.

RADIO-PHONOGRAPH SWITCH:

Fig. 1 shows the arrangement of the phonograph turntable controls. The radio-phonograph switch, when in the RADIO position, connects the speaker for radio reception. When this switch is turned to the PHONO position, current is connected to the turntable motor, and the pick-up and the speaker are connected for reproducing phonograph records.

VOLUME & TONE CONTROL:

The volume control and tone control on the front of the cabinet regulate both the radio and the phonograph.

FOR OTHER DATA, SEE PAGES COVERING CHASSIS PE6L AND PE6S

TURNTABLE SPEED:

Recordings are made with the turntable moving at the rate of 78 revolutions per minute. Consequently, the best reproduction is obtained at that speed. Put the record on the turntable, with a slip of paper part way under it so that the paper can be used as a revolution counter. Then adjust the speed control, fast or slow, until the turntable revolves 78 times each minute.

AUTOMATIC STOP:

When the radio-phono switch is in the PHONO position, the current is connected to the motor, but it still can be cut off by the upright automatic stop lever that extends from beneath the turntable, or the motor can be turned on by the flat lever which projects from under the turntable. The small upright lever, marked "Automatic Stop", Fig. 1, will turn the motor off when the electric pick-up needle enters the eccentric groove at the end of the record. As this occurs, the tone arm swings against the lever thereby automatically releasing the power switch.

PHONOGRAPH NEEDLES:

Although various types of needles are sold for use in phonographs only the standard size loud or medium needles are recommended. Special needles may be entirely unsuited for use on this machine, and may result in loss of tone quality. There is a wedge-shaped groove under the head of the pick-up to direct the needle into the mounting hole. When you become acquainted with the use of this needle guide, you will find it a very easy matter to change needles quickly.

©John F. Rider, Publisher

Andrea Radio

FOR ALIGNMENT, SETTING PUSH BUTTONS, ETC. SEE MODELS 1530, 31, 33, ETC. CHASSIS NOS PUE-L, PUE-S.

AC Model **1-E-8** Long Wave Tuning

AC Model **2-E-8** Standard Tuning

Standard Tuning **4-E-8** Long Wave Tuning **3-F-8**

AC CONSOLE MODELS

Standard Tuning **6-E-8** Long Wave Tuning **5-F-8**

(Chassis Numbers PE8L and PE8S)

AC COMBINATION MODELS

Standard Tuning **8-E-8** Long Wave Tuning **7-E-8**

AC AUTOMATIC COMBINATIONS

Standard Tuning **10-E-8** Long Wave Tuning **9-E-8**

Voltage Taps: Line voltage switch provided for operation on 100-120, 115-135, 140-160, 210-230, and 240-260 volts.

AC Frequency: Power transformer designed for 50-60 cycles.

BAND SWITCH

Band switch controls button tuning, manual tuning, and phonograph: The right hand, outside knob on the Standard Tuning or Long Wave Tuning sets is marked:

Standard Tuning					Long Wave Tuning				
S	I	M	A	P	S	I	M	L	P

S—Short Wave I—Intermediate Short Waves M—Broadcast or Medium Waves. L—Long Waves A—Automatic button tuning on broadcast or medium waves P—Phonograph.

Automatic push button tuning operates only on the broadcast or medium wave band when the switch is in the "A" position. Manual tuning must be used for the other wave bands. On the table models and consoles, the phonograph pick-up terminals are connected to the high-fidelity audio-amplifier when the band switch is in the "P" position. On the combination models, turning the band switch to the P position turns on the current for the phonograph motor and connects the pick-up to the amplifier.

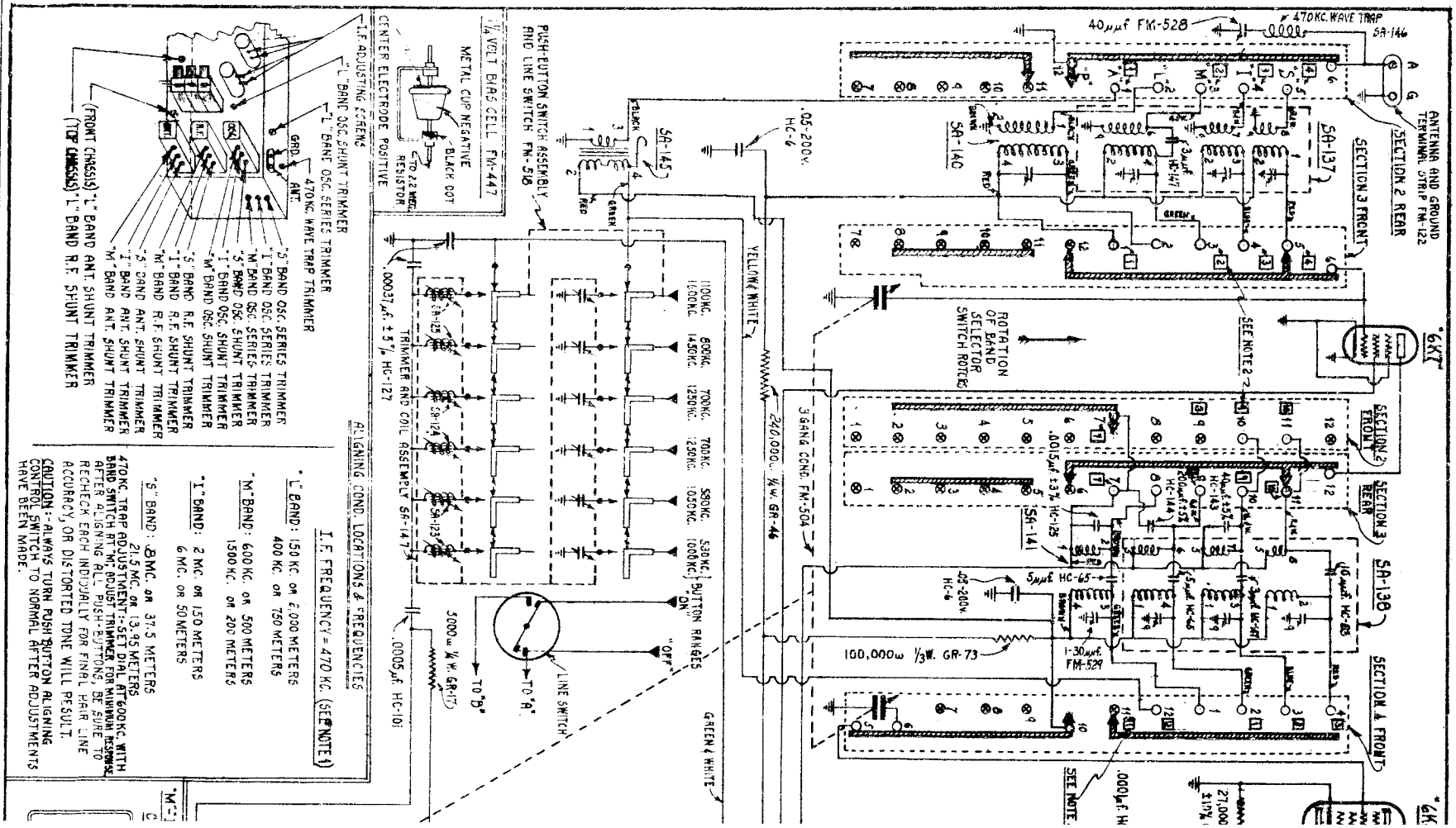

ANDREA RA

DIO CORP.

MODELS 1E8, 3E8, 5E8, 7E8, 9E8, Chassis PE8L
MODELS 2E8, 4E8, 6E8, 8E8, 10E8, Chassis PE8S
Schematic, Coils, Trimmers, Alignment, Data, Tuner, Parts

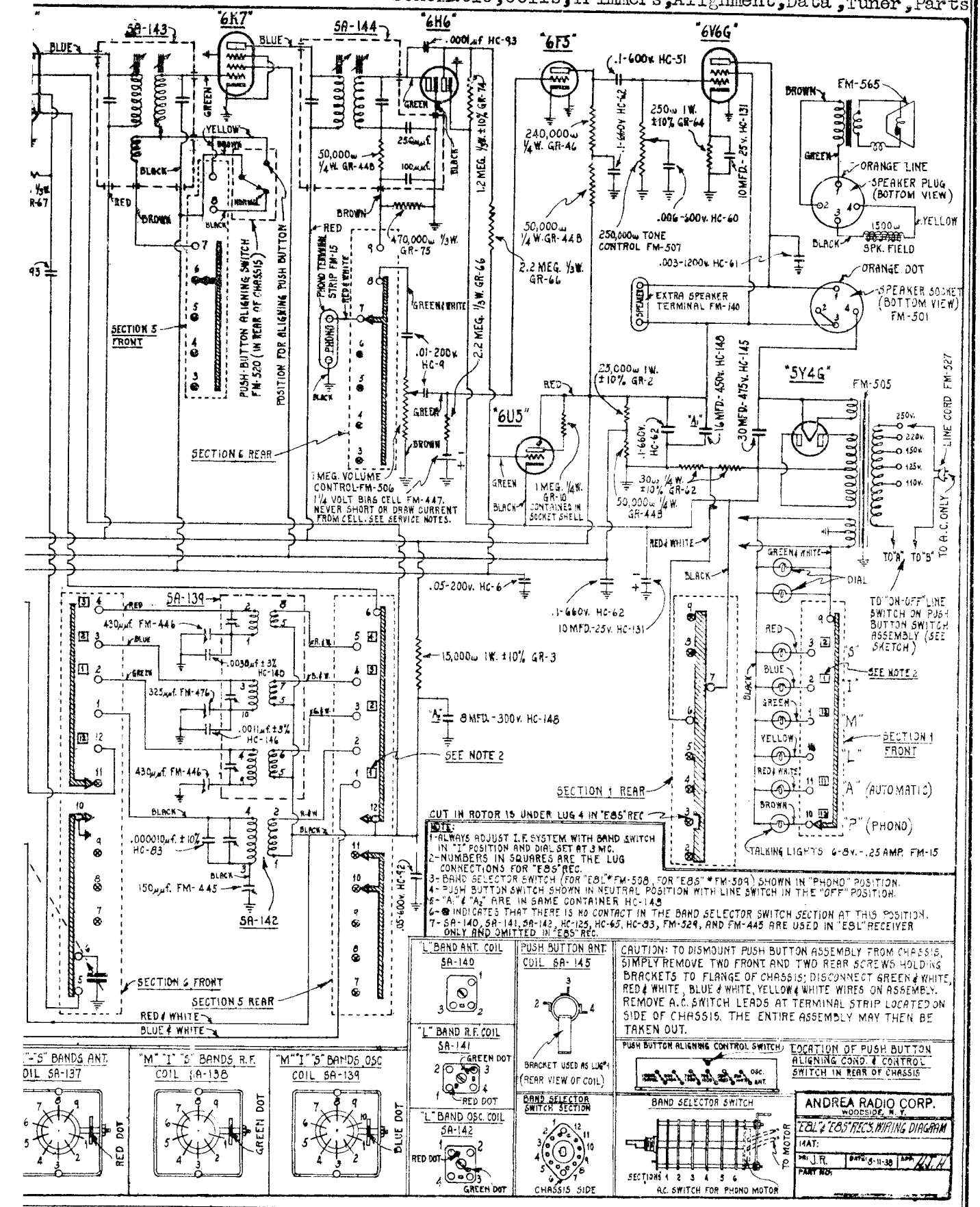

MODELS 3E11,5E11,7E11,9E11,Chassis PE11L
MODELS 4E11,6E11,8E11,10E11,Chassis PE11S
Schematic,Coils,Trimmers,Alignment,Tuner,Parts

AC MODELS

Standard Tuning **4-E-11** Long Wave Tuning **3-E-11**

Standard Tuning **8-E-11** Long Wave Tuning **7-E-11**

AC CONSOLE MODELS

Standard Tuning **6-E-11** Long Wave Tuning **5-E-11**

AC AUTOMATIC COMBINATIONS

Standard Tuning **10-E-11** Long Wave Tuning **9-E-11**

BAND SWITCH

Band switch controls button tuning, manual tuning, and phonograph: The right hand, outside knob on the Standard Tuning or Long Wave Tuning sets is marked:

Standard Tuning	Long Wave Tuning
S	L
I	M
M	I
A	L
P	A
	P

S—Short Wave I—Intermediate Short Waves M—Broadcast or Medium Waves.
L—Long Waves A—Automatic button tuning on broadcast or medium waves
P—Phonograph.

VOLUME CONTROL — DIAL TUNING — BAND SWITCH

AUTOMATIC TUNING

TONE CONTROL — OFF ON

Automatic push button tuning operates only on the broadcast or medium wave band when the switch is in the "A" position. Manual tuning must be used for the other wave bands. On the table models and consoles, the phonograph pick-up terminals are connected to the high-fidelity audio-amplifier when the band switch is in the "P" position. On the combination models, turning the band switch to the P position turns on the current for the phonograph motor and connects the pick-up to the amplifier.

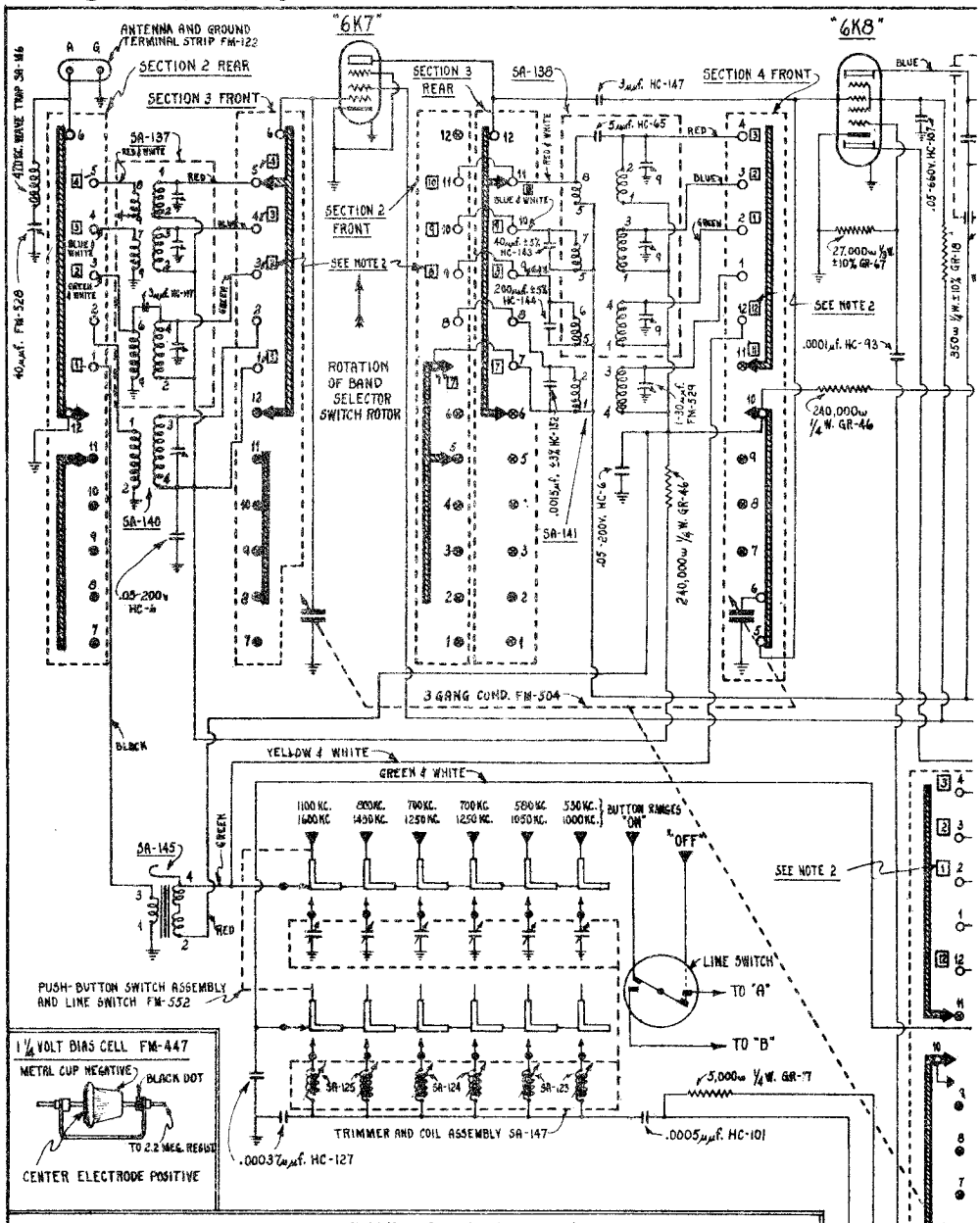

©John F. Rider, Publisher

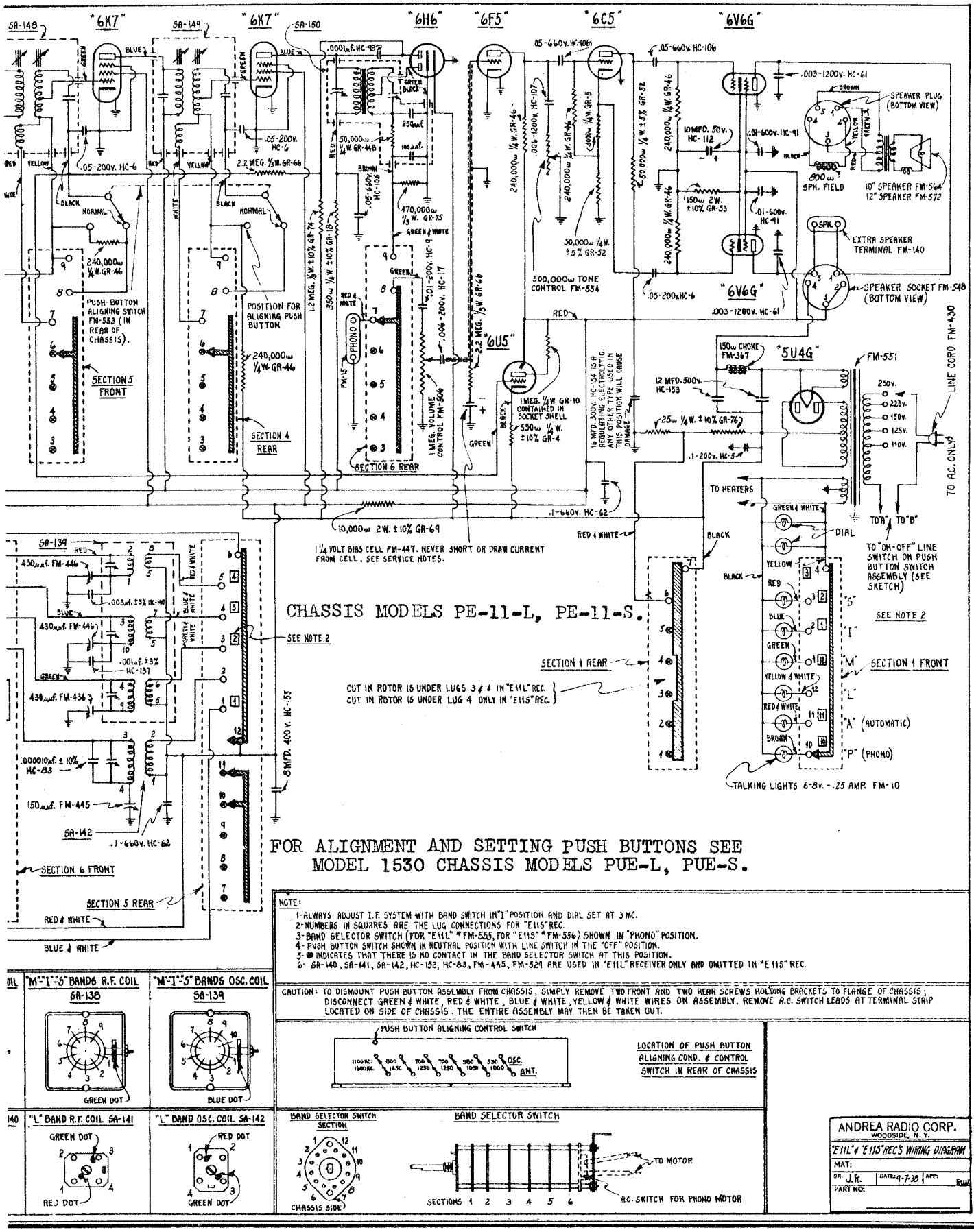

CHASSIS MODELS PE-11-L, PE-11-S.

FOR ALIGNMENT AND SETTING PUSH BUTTONS SEE MODEL 1530 CHASSIS MODELS PUE-L, PUE-S.

NOTE:
1-ALWAYS ADJUST I.F. SYSTEM WITH BAND SWITCH IN "I" POSITION AND DIAL SET AT 3 MC.
2-NUMBERS IN SQUARES ARE THE LUG CONNECTIONS FOR "E11S" REC.
3-BAND SELECTOR SWITCH (FOR "E11L" * FM-555, FOR "E11S" * FM-556) SHOWN IN "PHONO" POSITION.
4-PUSH BUTTON SWITCH SHOWN IN NEUTRAL POSITION WITH LINE SWITCH IN THE "OFF" POSITION.
5-● INDICATES THAT THERE IS NO CONTACT IN THE BAND SELECTOR SWITCH AT THIS POSITION.
6-SA-140, SA-141, SA-142, HC-152, HC-83, FM-445, FM-529 ARE USED IN "E11L" RECEIVER ONLY AND OMITTED IN "E11S" REC.

CAUTION: TO DISMOUNT PUSH BUTTON ASSEMBLY FROM CHASSIS, SIMPLY REMOVE TWO FRONT AND TWO REAR SCREWS HOLDING BRACKETS TO FLANGE OF CHASSIS; DISCONNECT GREEN & WHITE, RED & WHITE, BLUE & WHITE, YELLOW & WHITE WIRES ON ASSEMBLY. REMOVE A.C. SWITCH LEADS AT TERMINAL STRIP LOCATED ON SIDE OF CHASSIS. THE ENTIRE ASSEMBLY MAY THEN BE TAKEN OUT.

"M" "1"-"5" BANDS R.F. COIL SA-138

"M" "1"-"5" BANDS OSC. COIL SA-139

"L" BAND R.F. COIL SA-141

"L" BAND OSC. COIL SA-142

PUSH BUTTON ALIGNING CONTROL SWITCH

LOCATION OF PUSH BUTTON ALIGNING COND. & CONTROL SWITCH IN REAR OF CHASSIS

BAND SELECTOR SWITCH SECTION

BAND SELECTOR SWITCH

ANDREA RADIO CORP.
WOODSIDE, N. Y.
"E11L" & "E11S" REC'S WIRING DIAGRAM
MAT:
DR. J.R. | DATE 9-7-39 | APP:
PART NO:

ANDREA RADIO CORP.

MODELS 2D5, 3D5, 4D5
Chassis D5L
Schematic, Coils, Trimmers
Parts, Alignment

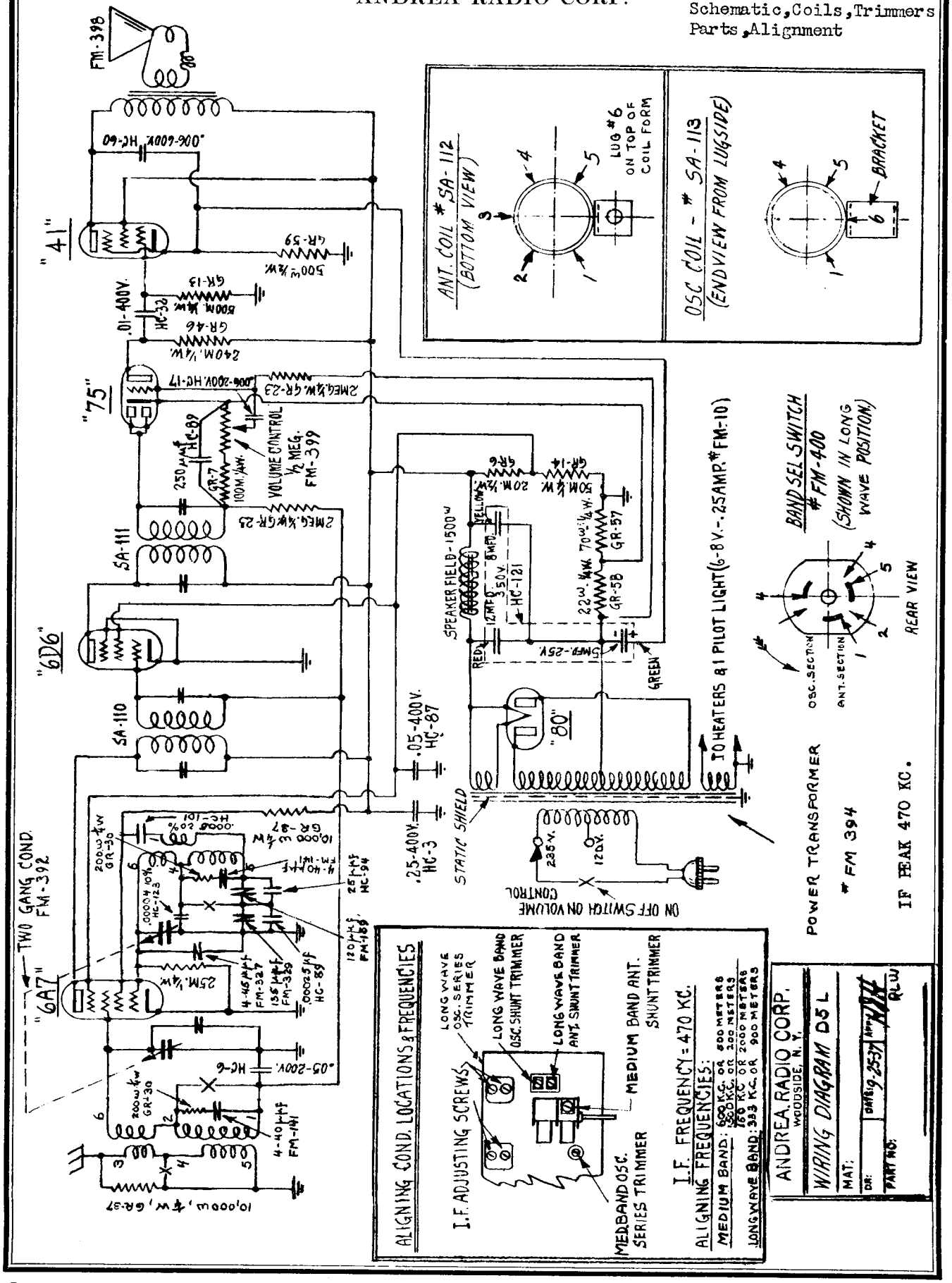

©John F. Rider, Publisher

MODELS 2D5,3D5,4D5
Chassis D5,D5E,D5S
Schematic,Coils,Parts
Alignment

ANDREA RADIO CORP.

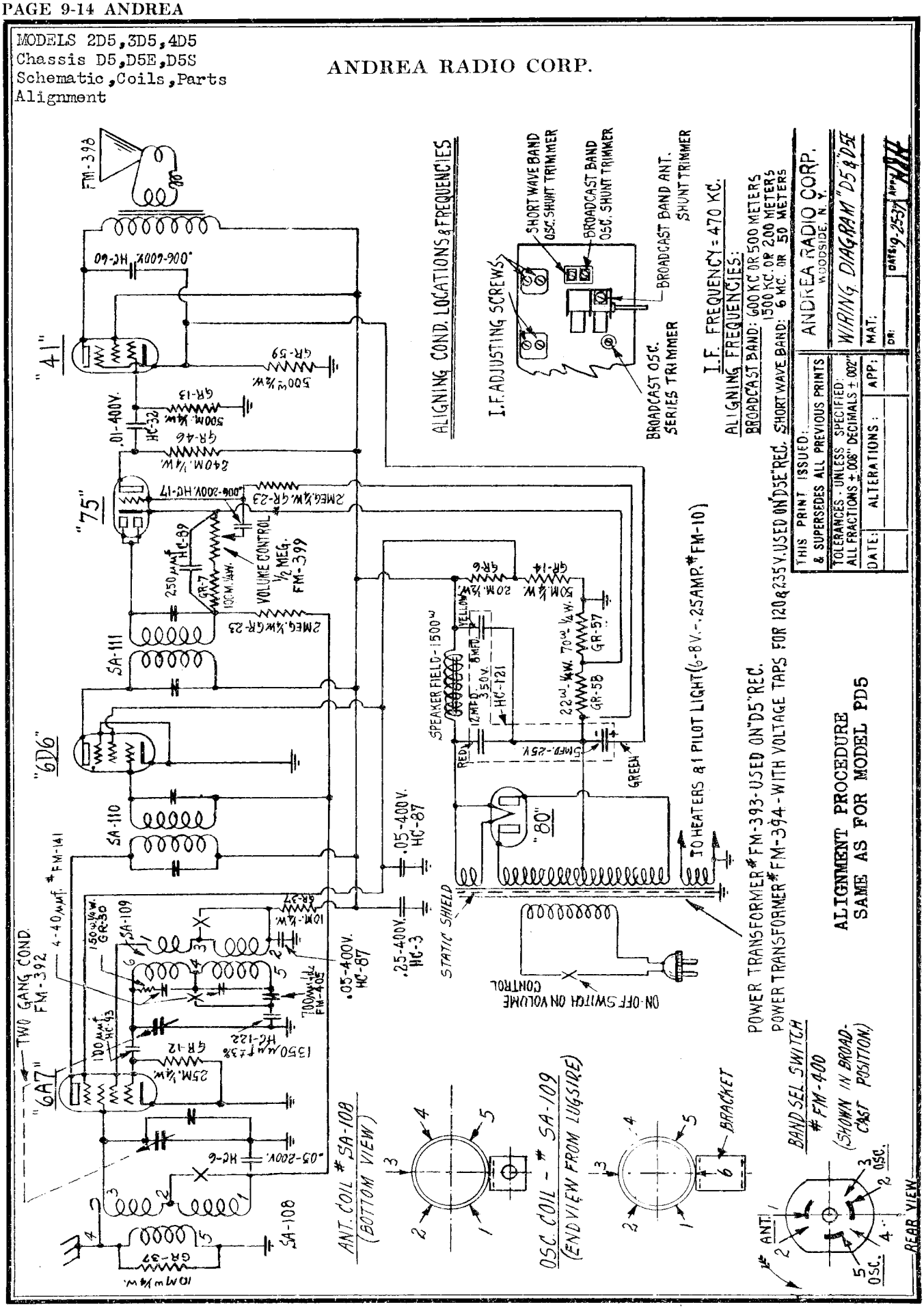

©John F. Rider, Publisher

ANDREA RADIO CORP.

MODELS 6D5,8D5
Chassis PD5,PD5E
Schematic,Coils,Parts

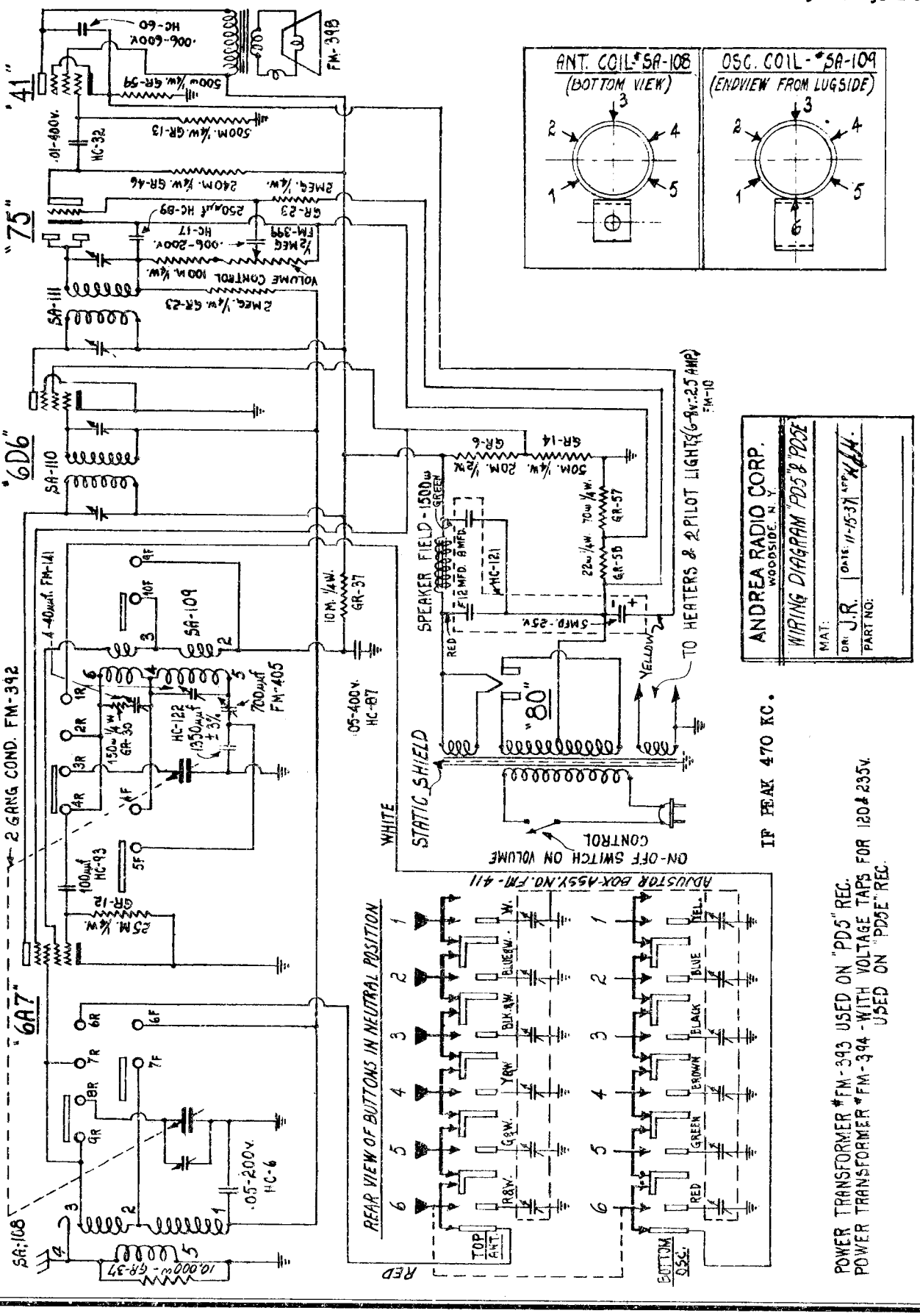

©John F. Rider, Publisher

ALIGNMENT INSTRUCTIONS

MODELS 2D5,3D5,4D5-CHASSIS D5L

Accuracy can only be obtained when small input signals from the ALL WAVE signal generator to the receiver are used.
An output meter for visual signal indication must also be used.
All aligning frequencies and location are shown on circuit diagram.

470 K.C. I.F. AMPLIFIER ALIGNMENT

A - Connect high potential output lead of signal generator to an .05 mfd. condenser, connect other side of condenser to grid of 6A7 tube.
B - Connect ground of generator to receiver ground.
C - Turn wave band switch to medium band position. (Right hand knob turned to right.)
D - Adjust both trimmers on the 1st and 2nd I.F. transformers for maximum output, using a copper oxide output meter connected across the voice coil.
E - Retrim each I.F. transformer condenser carefully for maximum output.

MEDIUM BAND ALIGNMENT "M" SCALE

A - Turn station selector knob till gang condenser plates are all in.
B - Scale pointer position must be flush with bottom of outside scale line marked "0" or calibrated scale will read incorrectly.
C - Replace .05 mfd. condenser with .00025 mfd. (250 mmf.). Set generator to 1500 KC (200 meters) along with receiver pointer.
D - Adjust medium band oscillator shunt trimmer carefully until signal is heard. Thereafter never touch this trimmer. Should signal be heard, trimmer need not be adjusted.
E - Adjust medium band antenna shunt trimmer on gang condenser for maximum output deflection.
F - Set receiver dial at 500 meters (600 KC) along with signal generator.
G - Adjust medium band oscillator series trimmer (see diagram) while turning the station selector knob back and forth about the signal for each change in trimmer setting. If the gang condenser is not turned for each trimmer adjustment, false alignment will result.
H - Reset generator for 1500 KC (200 meters) and tune in signal on receiver. Retrim antenna shunt trimmer carefully for maximum output.

LONG WAVE BAND ALIGNMENT "L" SCALE

A - Set signal generator for 150 KC (2000 meters) and connect generator high potential lead in series with .05 mfd. condenser to grid of 6A7 tube.
B - Set receiver dial to 2000 meters.
C - Adjust L.W. series oscillator shunt trimmer until signal reaches maximum deflection on the output meter.
D - Set generator and receiver dial to 333 KC (900 meters), and adjust L.W. oscillator shunt trimmer until the signal reaches maximum deflection in the output meter.
E - Repeat B and C
F - Repeat D
G - Remove generator lead from grid of 6A7. Replace .05 mfd. condenser with a .00025 mfd. condenser and connect to antenna lead of receiver.
H - Set generator and receiver dial to 333 K.C. (900 meters)
I - Adjust antenna coil shunt trimmer for maximum deflection on the output meter.
J - Set generator and receiver dial to 150 KC (2000 meters) and adjust L.W. oscillator series trimmer for maximum deflection while rotating dial slowly about signal.
K - Repeat I

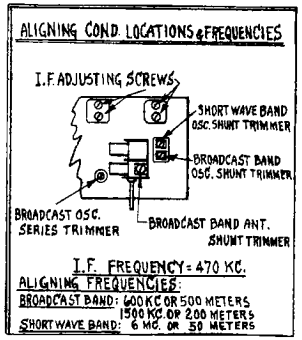

ALIGNMENT PROCEDURE

MODEL 6D5 - CHASSIS PD5
MODEL 8D5 - CHASSIS PD5E
MODELS 2D5,3D5,4D5- CHASSIS D5,D5E,D5S

Accuracy can only be obtained when small input signals from the ALL WAVE Signal Generator to the receiver are used.
An output meter for visual signal indication must also be used.
All aligning frequencies and locations are shown on circuit diagram.

470 KC I.F. AMPLIFIER ALIGNMENT

A - Connect high potential output lead of signal generator to a .05 mfd. condenser; connect other side of condenser to grid of 6A7 tube.
B - Connect ground of generator to receiver ground.
C - Turn wave band switch to Broadcast position. (left hand knob turned to right)
D - Adjust both trimmers on the 1st and 2nd I.F. transformers for maximum output, using a copper oxide output meter connected across the voice coil.
E - Retrim each I.F. transformer condenser carefully for maximum output.

BROADCAST ALIGNMENT "M" BAND

A - Turn station selector knob till gang condenser plates are all in.
B - Scale pointer position must be flush with bottom of outside scale line marked "0", or calibrated scale will read incorrectly.
C - Replace .05 mfd. condenser with .00025 mfd. (250 mmf.). Set generator to 1500 KC along with receiver pointer on 1500 KC of scale.
D - Adjust Broadcast oscillator shunt trimmer carefully until signal is heard. Thereafter, never touch this trimmer. Should signal be heard, trimmer need not be adjusted.
E - Adjust Broadcast Antenna shunt trimmer on gang condenser for maximum output deflection.
F - Set receiver dial at 600 KC, along with signal generator.
G - Adjust Broadcast oscillator series trimmer (see diagram), while turning the station selector knob back and forth about the signal for each change in trimmer setting. If the gang condenser is not turned for each trimmer adjustment, false alignment will result.
H - Set generator for 1500 KC, and tune in signal on receiver. Retrim antenna shunt trimmer carefully for maximum output.

SHORT WAVE BAND "S" SCALE ALIGNMENT

A - Replace .00025 mfd. condenser with 400 ohm resistor. Set generator to 6000 KC (6 megacycles). Turn band selector knob to right and tune in signal.
B - Adjust short wave band "oscillator" shunt trimmer while turning the station selector knob back and forth about the signal for each trimmer adjustment, until maximum output deflection on the meter is obtained.
If the gang condenser is not rotated for each trimmer adjustment, false alignment and weak performance will result.

Audible methods of alignment must never be used. No other adjustments on this band are required.

AUTOMATIC STATION ADJUSTOR BOX

*FM-411 (LOCATED ON REAR OF CHASSIS)

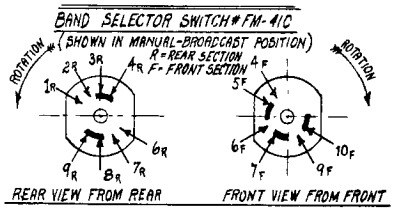

ANT.		OSC.
①	530 TO 780 KC.	①
②	630 TO 950 KC.	②
③	640 TO 975 KC.	③
④	650 TO 1010 KC.	④
⑤	800 TO 1300 KC.	⑤
⑥	1100 TO 1600 KC.	⑥

©John F. Rider, Publisher

ANDREA RADIO CORP.

MODELS 11E6,12E6,14E6
Chassis PE66L
Schematic,Trimmers,Parts
Coils

AC Model 12-E-6 AC Model 14-E-6 AC Model 11-E-6

CHASSIS NUMBER PE66L

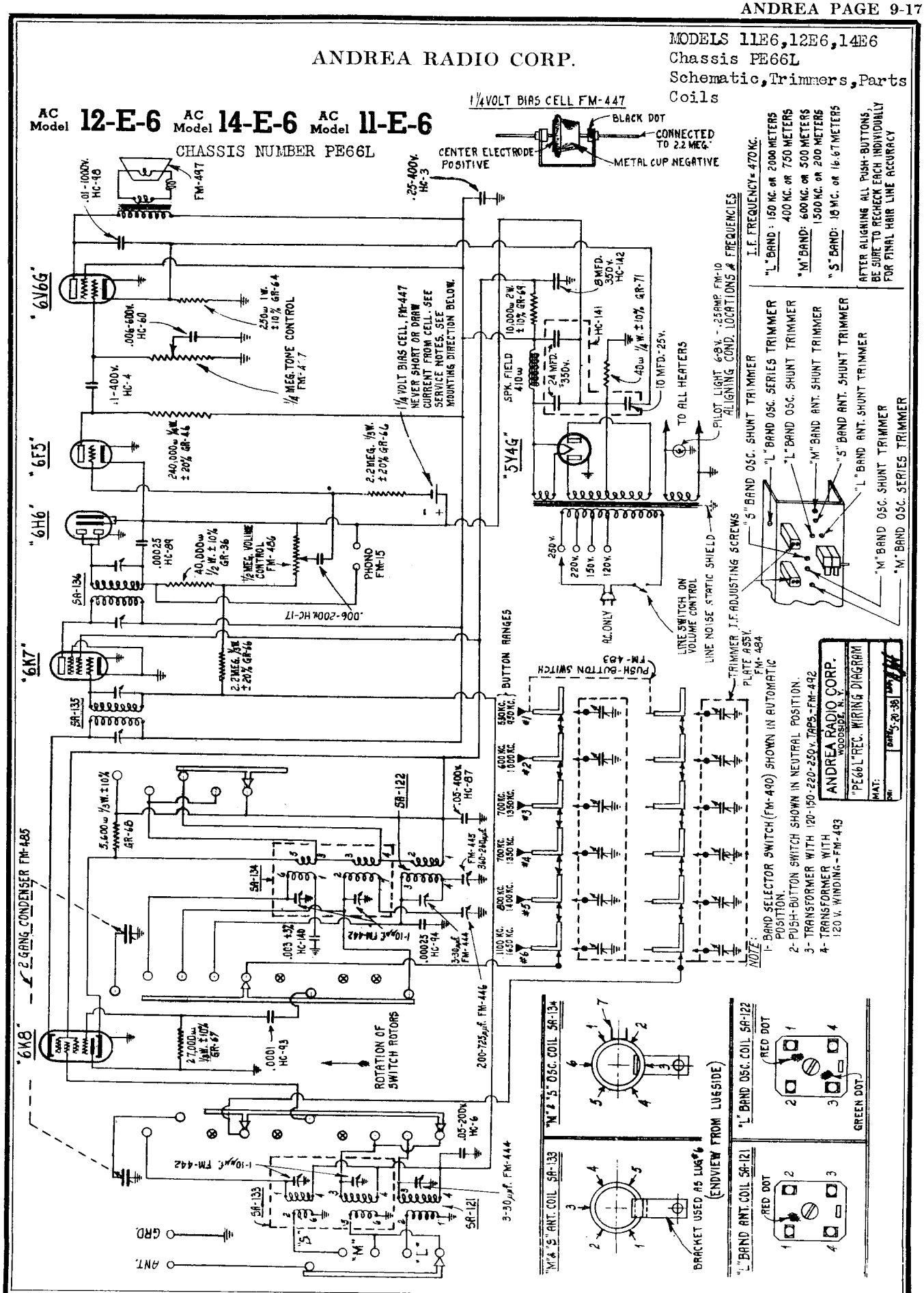

©John F. Rider, Publisher

MODELS 11E6,12E6,14E6
Chassis PE66S
Schematic,Trimmers
Coils,Parts

ANDREA RADIO CORP.

The kilocycle tuning ranges of the button controls are:

TOP BUTTON	No. 1 —	530 to 950 kc.
	No. 2 —	600 to 1,000 kc.
	No. 3 —	700 to 1,350 kc.
	No. 4 —	700 to 1,350 kc.
BOTTOM BUTTON	No. 5 —	800 to 1,400 kc.
	No. 6 —	1,100 to 1,650 kc.

LONG WAVE TUNING — AC Model 11-E-6

STANDARD TUNING — AC Model 12-E-6 — AC Model 14-E-6

CHASSIS NUMBER PE66S

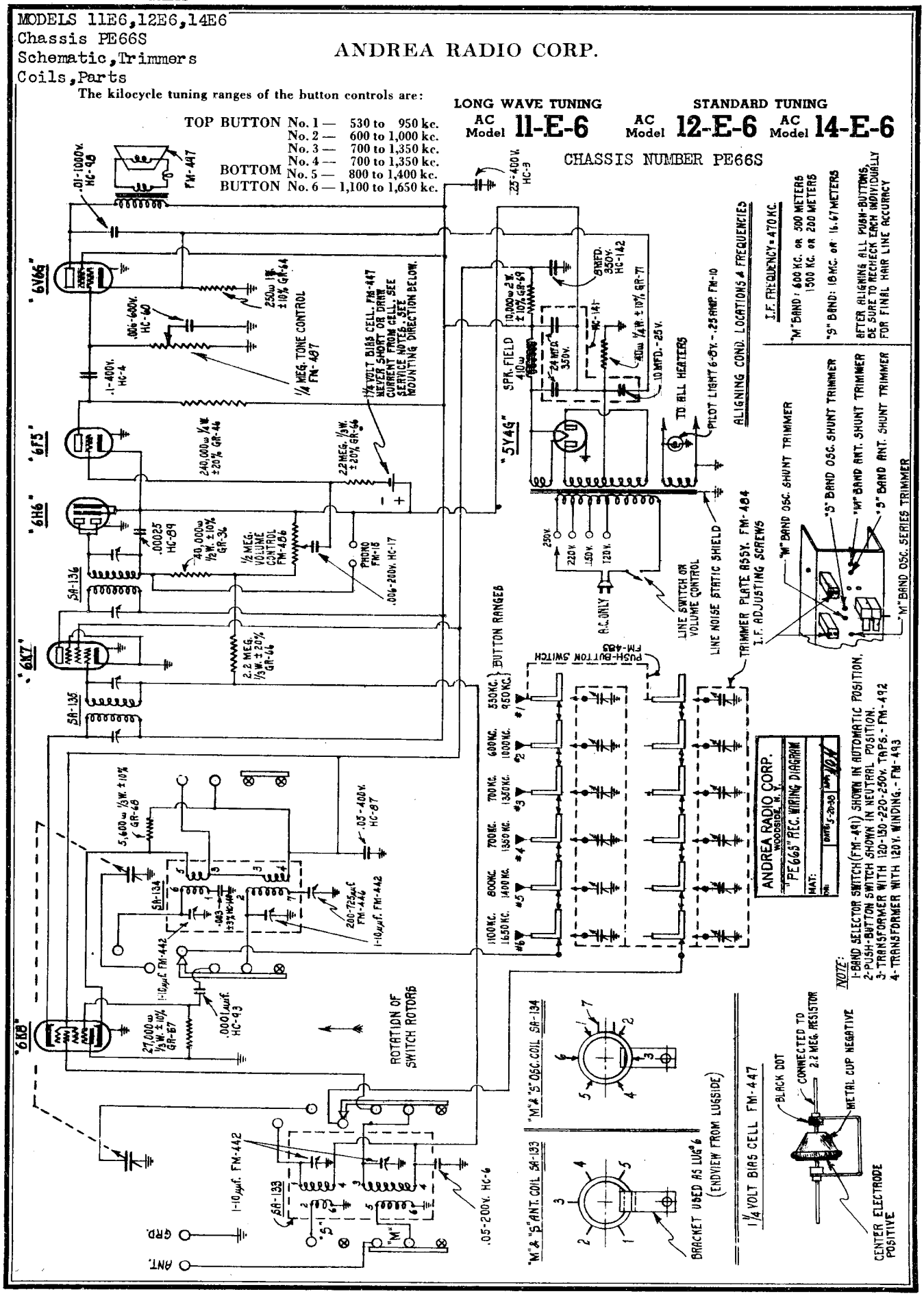

©John F. Rider, Publisher

MODELS 11E6,12E6,14E6
Chassis PE66L,PE66S
Alignment,Notes

ANDREA RADIO CORP.

LONG WAVE TUNING

AC Model 11-E-6

(for use outside the U.S.A.)

16.4 m. to 51 m.	18,300 kc. to 5,900 kc.
174 m. to 578 m.	1,720 kc. to 520 kc.
720 m. to 2,080 m.	420 kc. to 145 kc.

STANDARD TUNING

AC Model 12-E-6 (for use outside the U.S.A.)

16.4 m. to 51 m.	18,300 kc. to 5,900 kc.
174 m. to 578 m.	1,720 kc. to 520 kc.

AC Model 14-E-6 (for use in U.S.A.)

Line Voltages: Models 11-E-6 and 12-E-6 have taps for operation on 110-130, 140-160, 210-230 and 240-260 volts, 50-60 cycles. The model for use in the U.S.A. operates on 110-130 volts, 60 cycles only.

(Chassis Numbers PE66L and PE66S)

SERVICE DATA

FOR SETTING PUSH BUTTONS, NOTES ON BIAS CELL, SEE MODELS 1530,1,3,etc.CHASSIS NO. PUE-L,-S,

WARNING!

Always remove the line plug from the electric outlet before removing the chassis from the cabinet. Also—connect the speaker plug to the receiver before switching on the power. Otherwise, damage will result.

I. F. REALIGNMENT GENERALLY SUFFICIENT

As a rule, it is not necessary to readjust the short wave oscillator and antenna shunt and series trimmers unless they have been tampered with, or require replacing. Consequently, careful realignment of the I.F. system is all that requires attention, ordinarily. Before making any adjustments, tune in one particular station and note the quality of reception so that you can check the improvement after the I.F. system has been realigned.

USE SIGNAL GENERATOR AND OUTPUT VOLTMETER

For realigning, use a signal generator to supply a modulated carrier of 150, 400, 470, 600, 1,500 and 18,000 kc., plus an output voltmeter. Alignment by any other means is not recommended. Your service test generator should be checked frequently for change in calibration by getting a zero beat between the generator and broadcast stations of known frequency.

SPECIAL NOTES

Always check the pointer setting on the scale before you start alignment adjustments. Otherwise, inaccuracies will be introduced. When the variable plates are completely closed, the pointer should be set exactly on the small gold scratch lines which appear on the right and left top side of the tuning scale.

NOTES ON REALIGNING THE BANDS

During the aligning measurements, the output of the signal generator must be kept so low that it will not cause the AVC circuit in the set to function. In other words, when the volume control on the set is turned to maximum, the output should not show more than .5 volt across the voice coil, or 50 milliwatts in the plate circuit of the output tube.

Generally, at frequencies above 7,000 kc., the signal generator frequency will change with each adjustment of the generator output attenuator control. Hence, the receiver must be retuned each time the attenuator is adjusted.

Some generators cause trouble by direct radiation to the set at frequencies above 8 mc. Experience indicates that more accurate alignment is possible when the generator is separated by several feet from the receiver under test, in order to eliminate this direct pickup.

Alignment can be carried out on these models at any band without affecting any of the other bands.

ALIGNMENT INSTRUCTIONS

470 KC. I. F. ALIGNMENT

Connect the high-potential lead of the signal generator in series with a .1 mfd. condenser to the grid of the 6K8 tube. Set the generator at 470 kc., and adjust the output until a small deflection is obtained in the output meter. Adjust the trimmer condensers on the top of the 1st and 2nd I.F. transformers (see circuit diagram) for maximum deflection on the output meter. After this adjustment has been made, disconnect the generator from the grid of the 6K8 tube. This completes the alignment of the I.F. system.

"S" BAND ALIGNMENT

Connect the high-potential lead from the generator in series with a 400-ohm resistor to the antenna (red) lead of the set, and the low side of the generator to the ground (black) lead of the set. Put the wave band switch at the S position, adjust the generator to 18,000 kc., and the receiver to 18 mc. Vary the S band oscillator shunt trimmer slowly from maximum to minimum. You will hear the signal at two settings of the trimmer, one nearer the minimum capacity (plates open) and one near the maximum capacity (plates closed). The setting near minimum capacity is correct, because the setting near maximum capacity is at the image frequency.

Now adjust the antenna shunt trimmer. During this adjustment, be sure to rock the gang condenser back and forth slowly each time you make an adjustment of the trimmer. As you continue to do this, you will reach a point where further turning of the trimmer screw, while rocking the gang condenser, will not increase the signal response. This is the correct adjustment.

A simple method of determining if the receiver and generator are tuned for correct alignment is as follows:

Set the signal generator at 18,000 kc. and tune the receiver s[illegible]om 17,500 to 18,500 kc. Two signals should be heard, 940 kc. apart. One will be lower in frequency than 18,000 kc. and the other will be higher. The higher frequency, as indicated on the dial, is the correct aligning frequency, and the lower one is the image.

As a further check, leave the receiver tuned to the higher frequency. Very slowly, increase the generator frequency from 18,000 kc. to about 20,000 kc.

A signal will be heard near 19,000 kc. if all the settings are correct for alignment. If there is no signal, the original settings were on the image frequency. In that case, you must start again from the beginning, in order to be sure of accurate results.

After you have found the correct settings, the image, or lower, frequency response on the receiver will always sound weaker than the true signal.

"M" BAND ALIGNMENT

Replace the 400-ohm resistor in the generator lead by a .00025 mfd. condenser. Set the generator at 1,500 kc., turn the wave band switch to the M position, and set the dial of the receiver at 200 m. Adjust the M band oscillator shunt trimmer for maximum signal response. Next adjust the antenna shunt trimmer for maximum response.

This band must be aligned at 600 kc. also. Set the generator accordingly, and tune the receiver to 500 m. Adjust the M band oscillator series trimmer for maximum response. During this adjustment, be sure to rock the gang condenser for each small change of capacity of the series trimmer. When this adjustment has been completed, recheck the antenna adjustment at 1,500 kc. This completes the adjustment of the M band.

"L" BAND ALIGNMENT

Mode 11-E-6. chassis PE66L, have the long wave band also, as indicated by "L" on the wave band switch.

Connect the high-potential lead from the generator in series with a .1 mfd. condenser to the grid of the 6K8 tube. Set the generator at 150 kc. and the receiver at 2,000 m. Turn the wave band switch to the L position. Adjust the L band series oscillator trimmer for maximum response. This adjustment is required because of the wide frequency range obtained by adjusting this series oscillator trimmer. Due to this wide change in frequency, it is possible that a response will be obtained at several points, but the correct setting is indicated by maximum response.

Next, set the generator at 400 kc. and the receiver at 750 m., and adjust the L band oscillator shunt trimmer for maximum response. When this has been done, it is necessary to reset the generator at 150 kc., the receiver at 2,000 m., and to readjust the L band series oscillator trimmer in accordance with the preceding instructions.

Now, set the generator at 400 kc., the receiver at 750 m., and repeat the adjustment of the L band oscillator shunt trimmer for maximum response.

Without changing the settings of the generator and receiver, remove the generator lead from the grid of the 6K8, replace the .1 mfd. condenser with a .00025 mfd. condenser, and connect the lead to the antenna wire on the set. Adjust the L band antenna shunt trimmer for maximum response.

Next, set the generator at 150 kc., the receiver at 2,000 m., and align the L band series oscillator trimmer for maximum response. Be sure to rock the gang condenser for each adjustment of the trimmer.

Finnally, set the generator at 400 kc., the receiver at 750 m., and readjust the L band antenna shunt trimmer. This completes the adjustment of the L band.

ADJUSTING THE CONTROLS

Do this with great care: Put the wave band switch in the M position, for dial tuning on the broadcast or medium band. Tune in the station whose call letters you have put on the top button. When you have adjusted the tuning accurately, turn the wave band switch to position A. Push in the top button until it locks, and turn the volume control to maximum.

Turn on the set, and let it run for at least 10 minutes, so that it will become thoroughly warm. You will see that the button controls are arranged in pairs, numbered 1 to 6. In each pair, the antenna adjustment (ANT.) is at the left, and the oscillator adjustment (OSC.) is at the right.

Use a thin-blade screwdriver to adjust the screws. Do not force a thick blade into the slots. First adjust the No. 1 oscillator screw until you hear the station you tuned in previously with the dial. If the speaker breaks into a howl during this adjustment, turn the No. 1 antenna screw to the right or left until the howl stops. After you have an accurate setting of the oscillator screw, adjust the No. 1 antenna screw for maximum volume.

To check the accuracy of the settings, turn the wave band switch to position M. The station should sound practically the same whether the switch is in the A or M position. If there is considerable difference, the station was not tuned accurately with the dial or else the corresponding button controls were not set correctly.

Repeat the same routine for button No. 2, adjusting the No. 2 oscillator and antenna screws, and continue the process in the same way for the other controls.

Finally, for a still sharper setting, cut the volume so that you can barely hear your station. If necessary, disconnect the antenna lead and twist it lightly around the insulated portion of the red wire. Again, adjust the No. 1 oscillator and antenna screws for maximum response from your station.

To change any button to another station, if the station's kilocycle rating is within the range of the corresponding controls, it is only necessary to put in a new button marker, and to reset the controls in accordance with the preceding instructions.

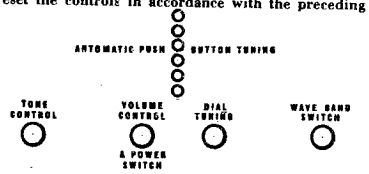

AUTOMATIC OR DIAL TUNING

Wave Band Switch controls push button or dial tuning: The right hand, outside knob on Standard Tuning or Long Wave Tuning is marked:

Standard Tuning: S M A

Long Wave Tuning: S M L A

S—Short waves

M—Broadcast or medium waves

L—Long waves

A—Automatic button tuning on broadcast or medium waves

Automatic push button tuning operates only on the broadcast or medium wave band, when the switch is in the A position. In other positions, the dial must be used.

©John F. Rider, Publisher

MODEL 62X, Chassis XD5
MODEL 62PX, Chassis PXD5
Schematic, Trimmers, Parts
Coils, Alignment

ANDREA RADIO CORP.

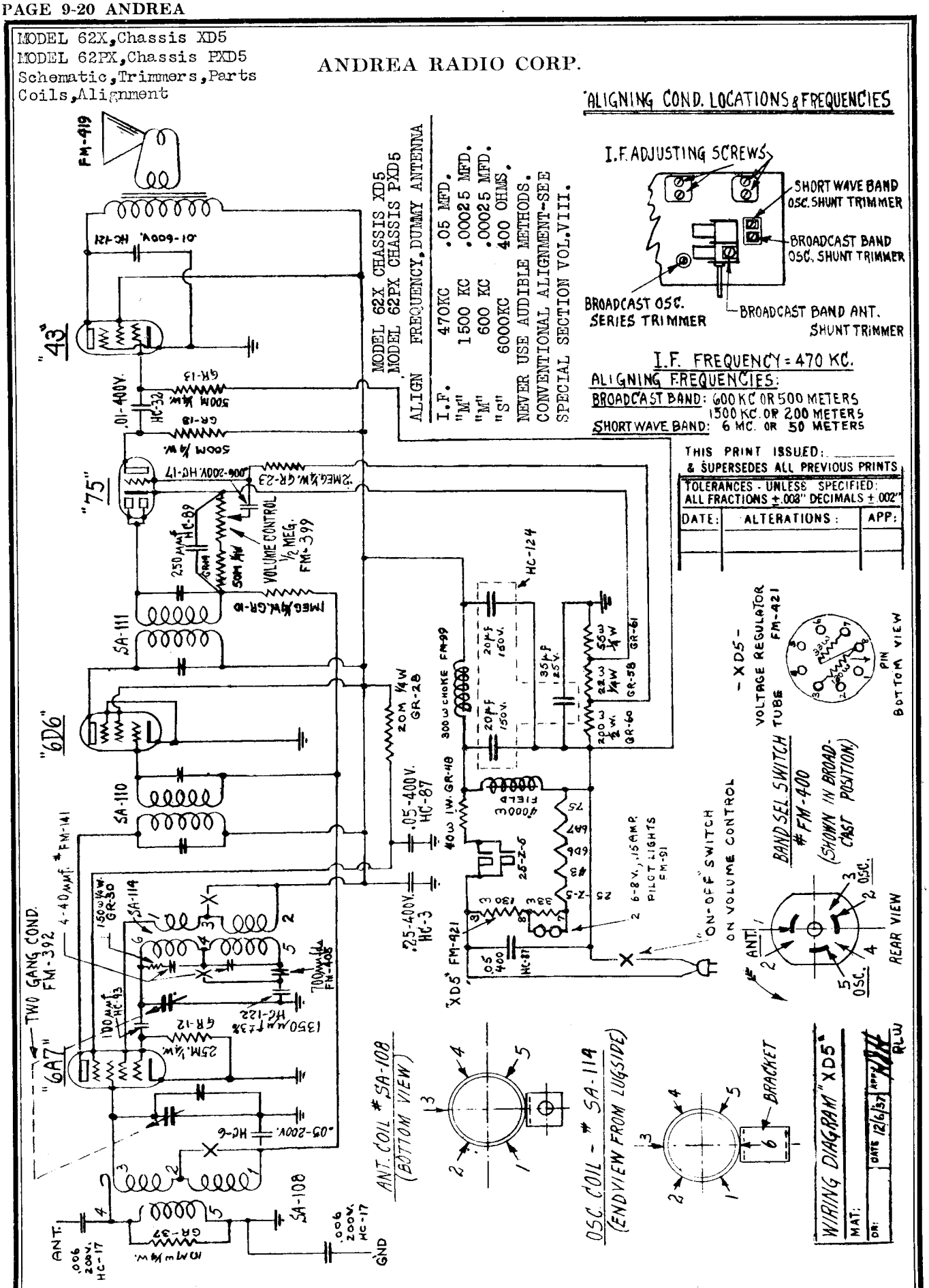

©John F. Rider, Publisher

©John F. Rider, Publisher

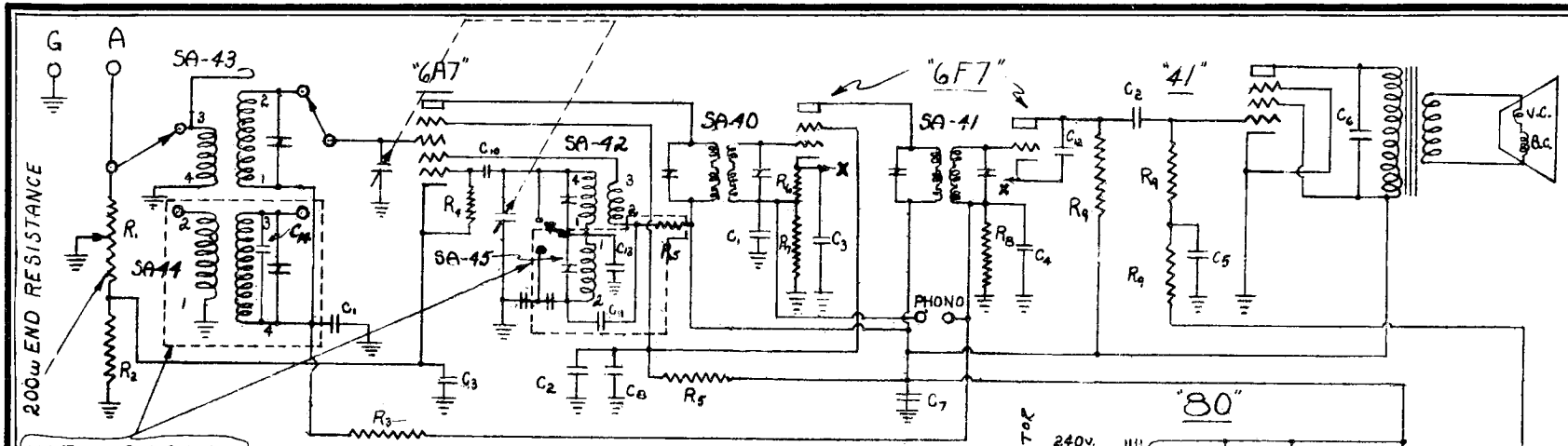

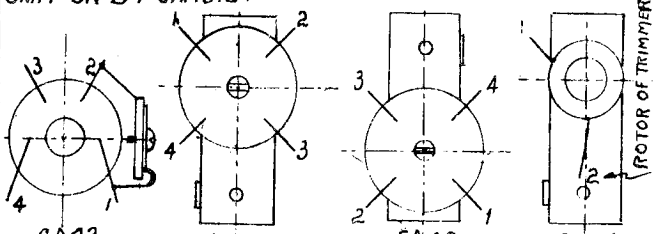

CONVENTIONAL ALIGNMENT SEE SPECIAL SECTION VOL.-VIII

IF PEAK 470 KC.

R.	PART NO.	VALUE
1	FM-118 or 133*	25,000Ω VOLUME CONTROL
2	GR-17	5,000Ω ¼ WATT ±20%
3	GR-10	1 MEGΩ ¼ WATT ±20%
4	GR-12	25,000Ω ¼ WATT ±20%
5	GR-34	30,000Ω ½ WATT ±20%
6	GR-31	400Ω ¼ WATT ± 10%
7	GR-33	4,000Ω ¼ WATT ± 10%
8	GR-23	2 MEGΩ ¼ WATT ±20%
9	GR-9	250,000Ω ¼ WATT ±20%
1	HC-6	.05 MFD. - 200V.
2	HC-53	.05 MFD. - 440V.
3	HC-5	.1 MFD. - 200V.
4	HC-9	.01 MFD. - 200V.
5	HC-19	.25 MFD. - 200V.
6	HC-54	.006 MFD. - 1,000V.
7	HC-3	.25 MFD. - 440V.
8	HC-56	2 MFD. - 475V. PEAK
9	HC-52	8 MFD. - 475V. PEAK
10	HC-10	.00025 MFD. ±20% TYPE #1465
11	HC-28	.001 MFD. ±20% TYPE #1460
12	HC-55	.0005 MFD. ±20% TYPE #1465
13	HC-50	.00003 MFD. ±20% TYPE #1465
14	HC-57	.000015 MFD. ±20% TYPE #1468

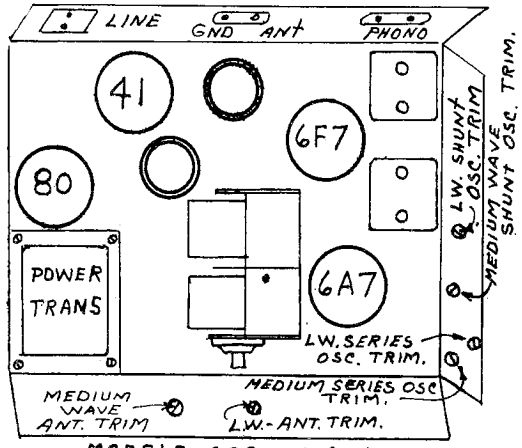

MODELS 400 AND 401

ALIGNMENT FREQUENCIES

1400 and 600 KC MED. WAVE
333 and 150 KC LONG WAVE

WIRING DIAGRAM	
J. R.	9/26/35
MODEL 400 - CHASSIS B4	
MODEL 401 - CHASSIS B4L	

* FM-118 ÷ VOLUME CONTROL WITHOUT SWITCH - MODEL 400
* FM-133 ÷ VOLUME CONTROL WITH SWITCH MODEL 401

MODEL 500
Chassis UB5
Schematic, Coils
Alignment, Parts

ANDREA RADIO CORP.

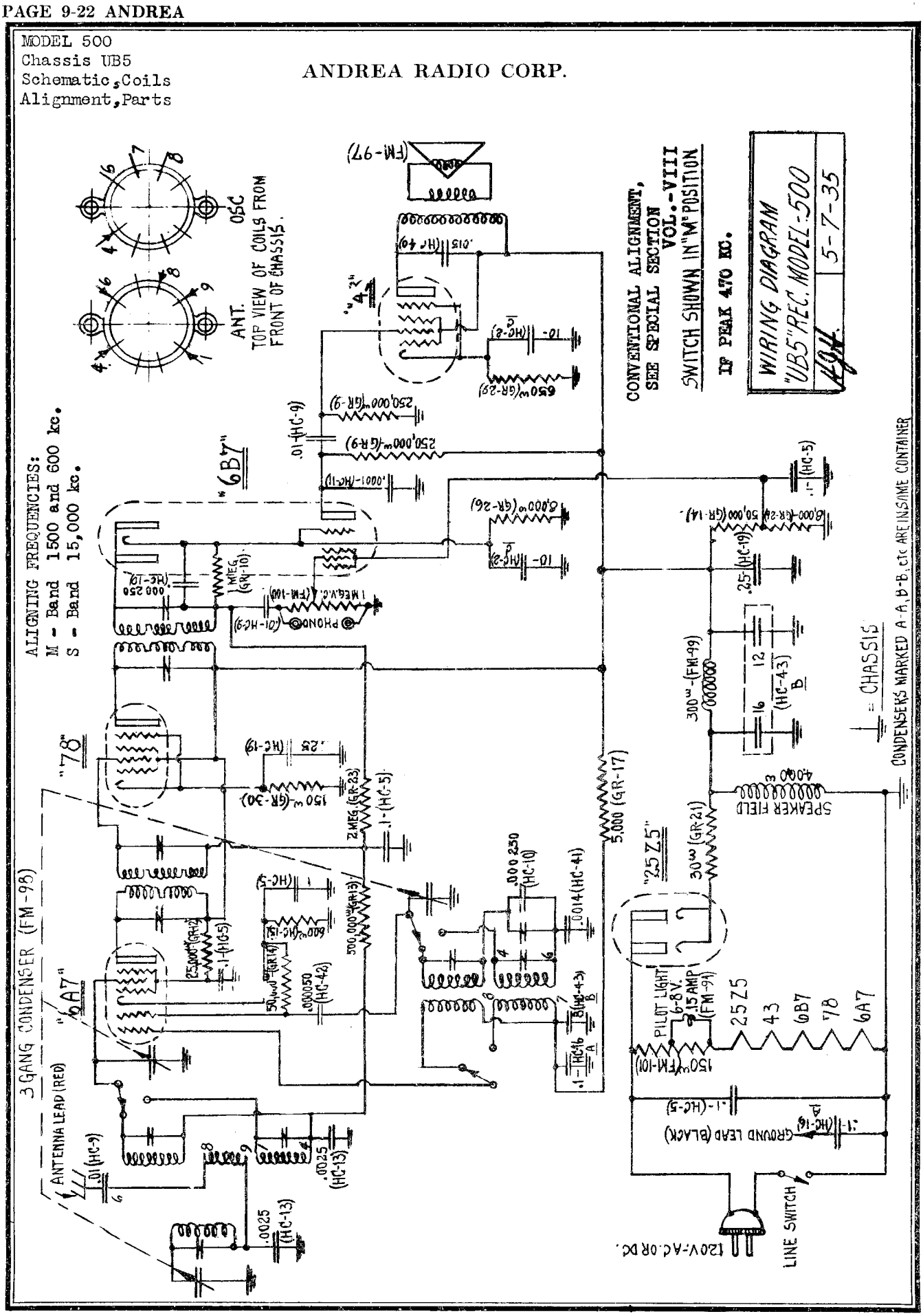

©John F. Rider, Publisher

ANDREA RADIO CORP.

MODEL 510, Chassis UC5S
MODEL 511, Chassis UC5L
Schematic, Coils, Parts
Alignment

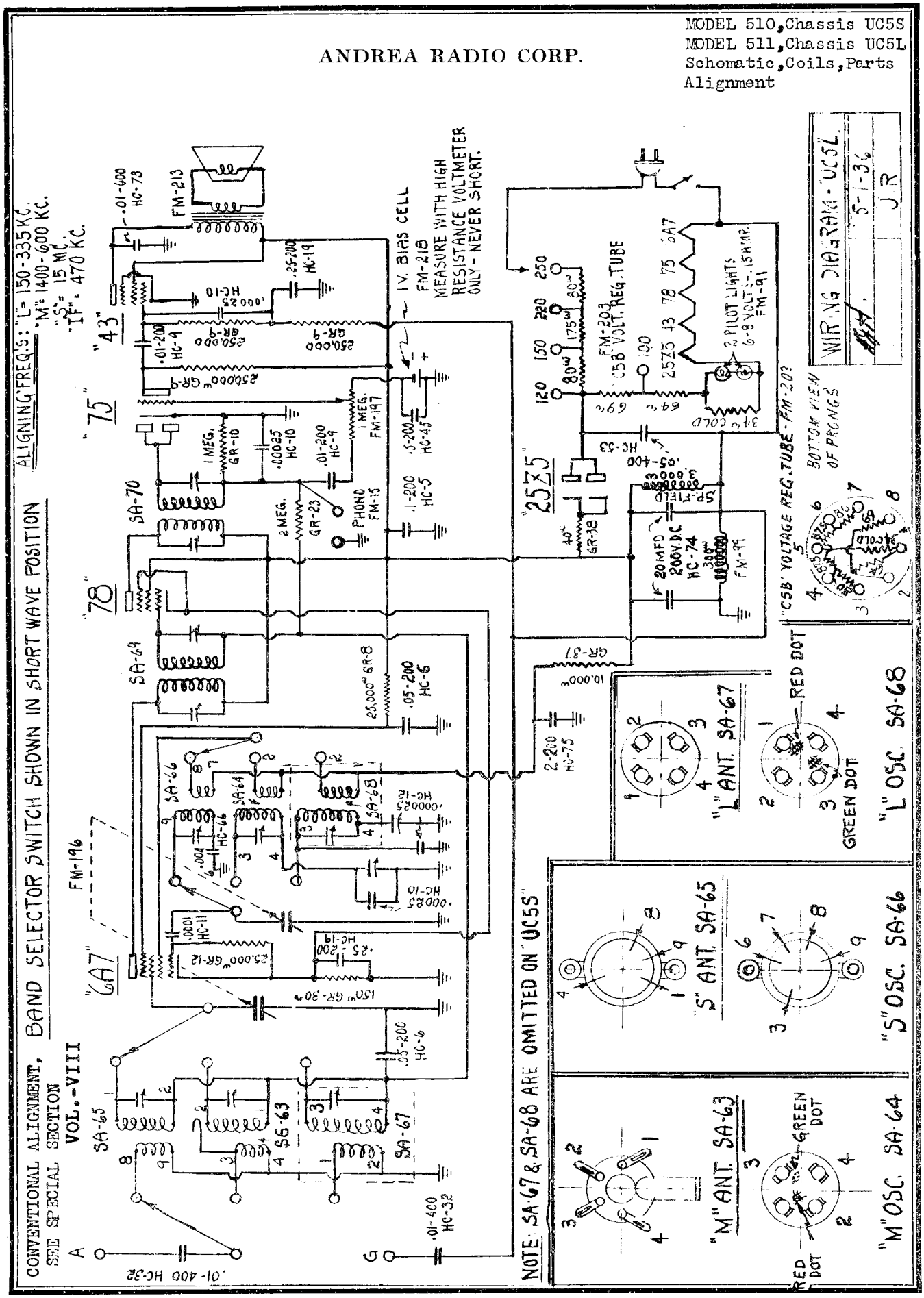

©John F. Rider, Publisher

MODEL 600
Chassis UB6

ANDREA RADIO CORP.

Schematic, Alignment Parts

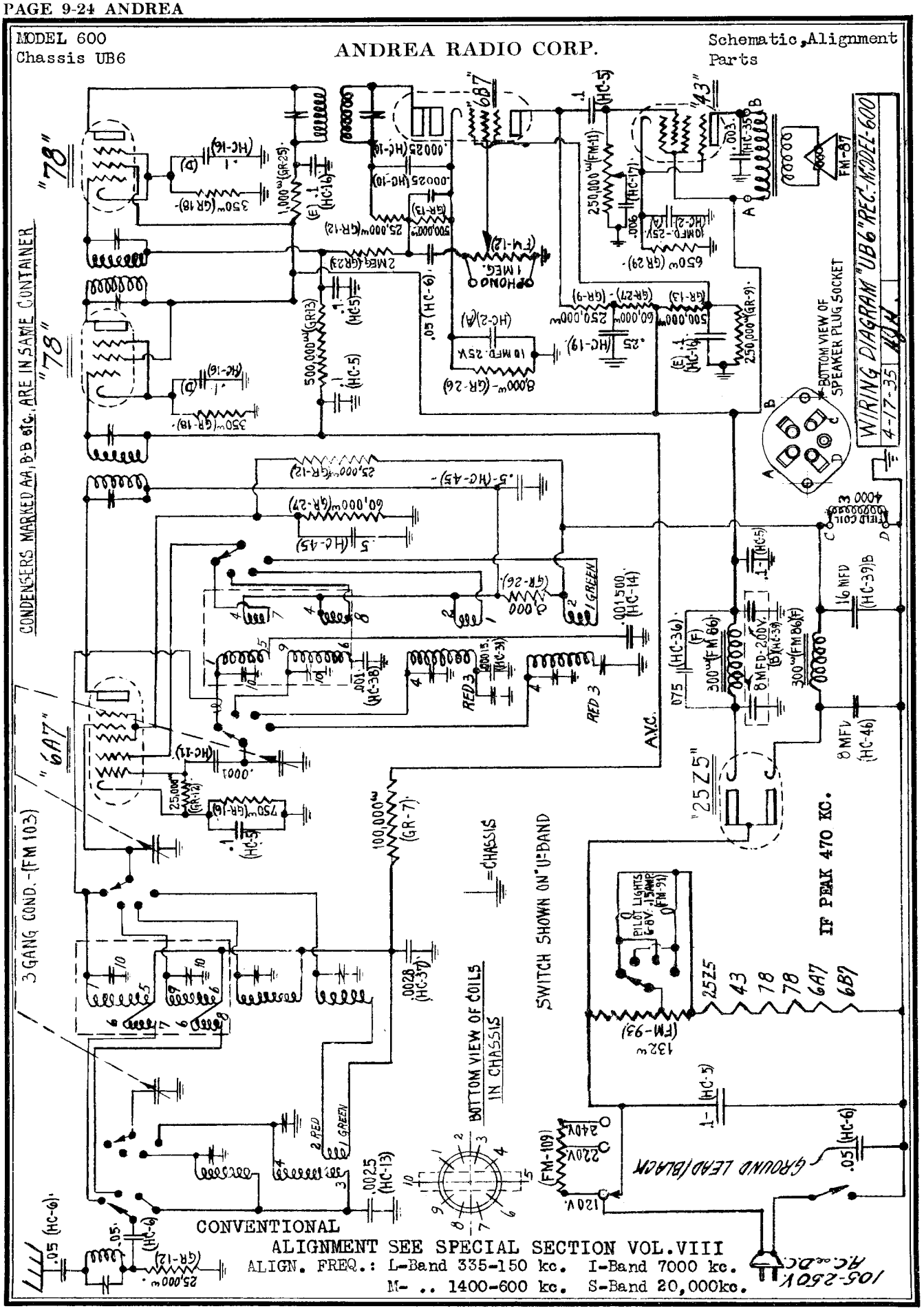

©John F. Rider, Publisher

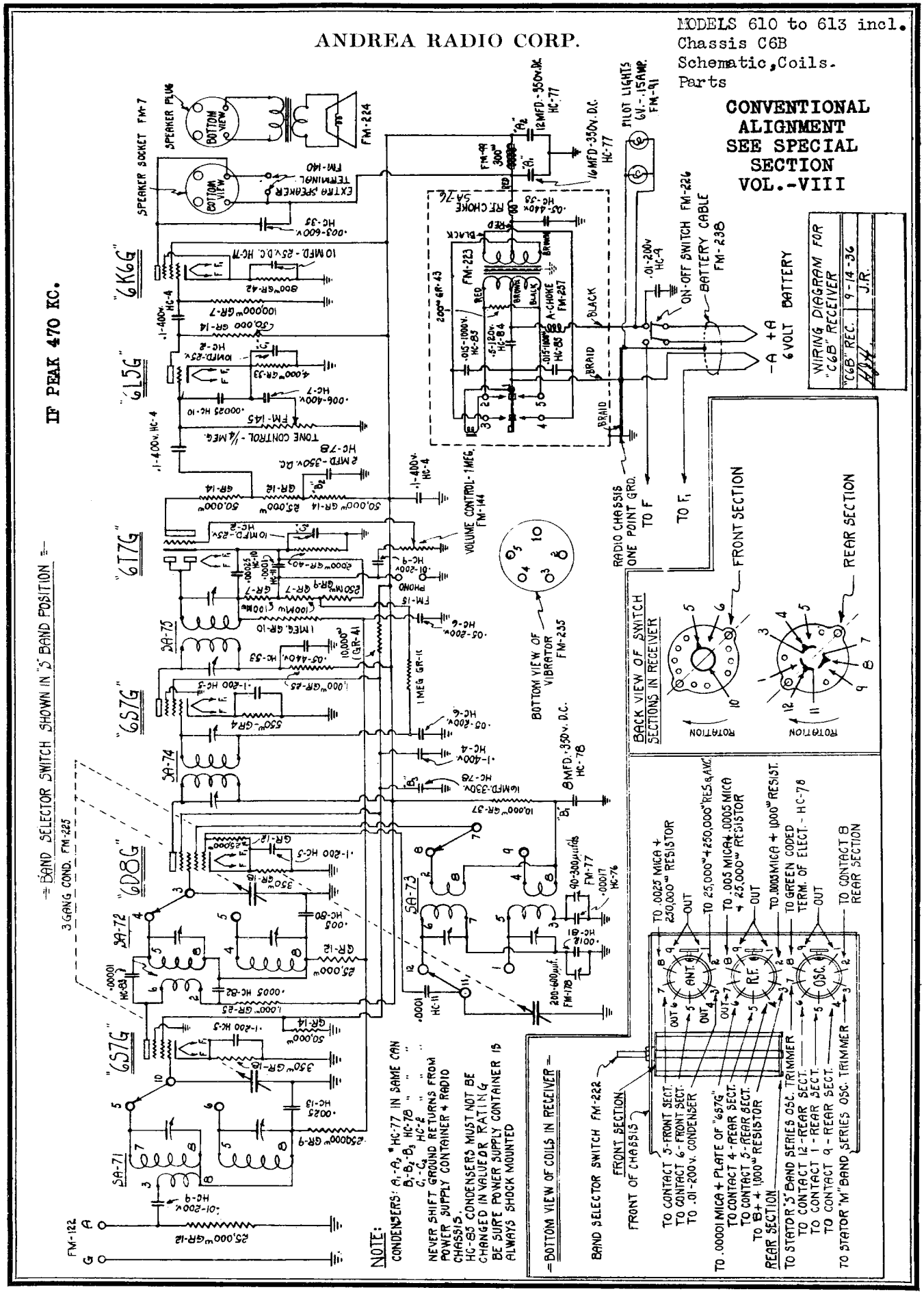

©John F. Rider, Publisher

MODELS 610 to 613 incl.
Chassis C32B
Schematic, Coils, Parts

ANDREA RADIO CORP

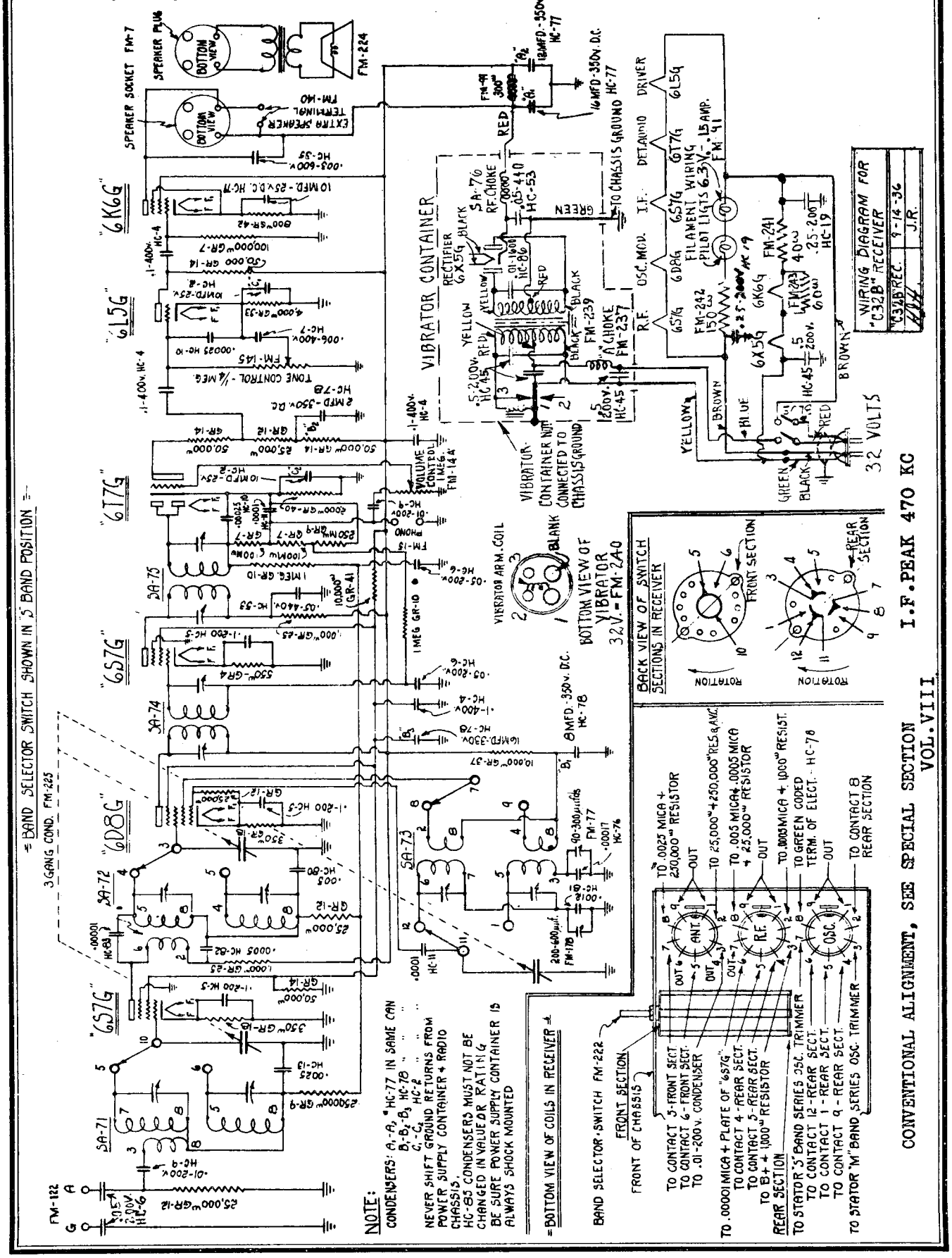

©John F. Rider, Publisher

©John F. Rider, Publisher

ALIGNMENT INSTRUCTIONS

Andrea Radio

MODELS 610, 611, 612, 613

CHASSIS C6B - C32B

Chassis C6B is for 6 volt service and covers two ranges "M" & "S"

" 32C6B is for 32 volt service and covers two ranges "M" & "S"

470 K.C. I.F. ADJUSTMENT

1. Connect high potential output lead from test generator in series with a .1 mfd. condenser to the grid of the 6D8G tube.
2. Connect output voltmeter (copper oxide rectifier type) across voice coil of speaker.
3. Set generator to supply a modulated 470 K.C. signal. Adjust generator output attenuator until a small output reading is obtained on the output voltmeter.
4. Adjust both trimmers on top of the first and second I.F. transformers for maximum output.
5. Retrim slightly the first I.F. trimmer.

The I.F. is then aligned correctly.

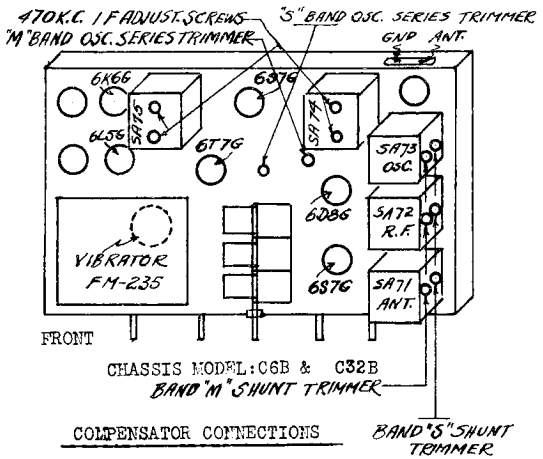

COMPENSATOR CONNECTIONS

ALIGNING FREQUENCIES:-

"M" (MEDIUM WAVE BAND)
ANT.-R.F.-OSC. SHUNT TRIMMERS 1400 K.C.
"M" BAND OSC. SERIES TRIMMER ONLY 600 K.C.

"S" (SHORT WAVE BAND)
ANT.-R.F.-OSC. SHUNT TRIMMERS 15 MEGACYCLES
"S" BAND OSC SERIES TRIMMER ONLY 6 MEGACYCLES

MEDIUM BAND "M" ALIGNMENT

Set test generator for 1400 K.C. Connect high potential lead of test generator in series with a .1 mfd. condenser to grid of 6D8G tube.

Tune receiver to 1400 K.C. (214.3 meters) on the tuning scale. If signal is not heard, leave scale pointer set to 1400 K.C. (214.3) meters and adjust oscillator coil shunt trimmer slowly and carefully until signal is heard.

The oscillator coil of receiver and dial are now set correctly, assuming the test generator frequency is correct. Otherwise, the dial calibration will be wrong.

Remove test generator hot lead from 6D8G grid. Replace .1 mfd. condenser with 250 mmf. (.00025 mfd.) and connect to antenna terminal of receiver "A", all other settings to remain the same.

Adjust R.F. coil shunt trimmer and antenna coil shunt trimmer for maximum output deflection.

Retune test generator to 600 K.C. (500 meters) and tune receiver to 600 K.C. (500 meters) until signal is heard.

Adjust oscillator coil series trimmer slowly while rotating the gang condenser slowly about the signal for each small adjustment of the series trimmer until any further adjustment of the series trimmer decreases the output signal. This signifies the aligning point has been reached. During this adjustment never touch the antenna R.F. or oscillator shunt trimmers.

Reset test generator to 1400 K.C., tune in signal on receiver, adjust antenna and R.F. shunt trimmers slightly for maximum output, never the oscillator shunt trimmer.

The "M" band is now aligned.

SHORT WAVE "S" BAND ALIGNMENT

Turn wave band selector switch to the right "S" band. Replace 250 mmf. (.00025 mfd.) condenser with 400 ohm resistor. Set generator frequency for 15000 K.C.

Align R.F. shunt trimmer for maximum output deflection. During this adjustment be certain to rotate the station selector knob back and forth slowly for each small R.F. shunt trimmer change.

Align antenna shunt trimmer for maximum output deflection. Be sure to rotate station selector knob back and forth slowly for each small antenna shunt trimmer change. Retrim R.F. shunt trimmer for any small change. Check to see that alignment has not been made on the Image.

Set test generator to 6000 K.C., retune receiver until signal is heard. Adjust oscillator series trimmer slowly while rotating the gang condenser around about the signal for each small adjustment of the series trimmer until further adjustment of the series trimmer decreases the output signal.

Never touch the antenna R.F. and oscillator shunt trimmer during this adjustment.

Reset test generator to 15000 K.C., tune receiver until correct signal is heard. Retouch antenna and R.F. shunt trimmer for final critical setting. During this final adjustment never touch the oscillator shunt trimmer.

MODEL 620,Chassis UD6S
MODEL 621,Chassis UD6L
Schematic,Coils,Parts
Alignment

ANDREA RADIO CORP.

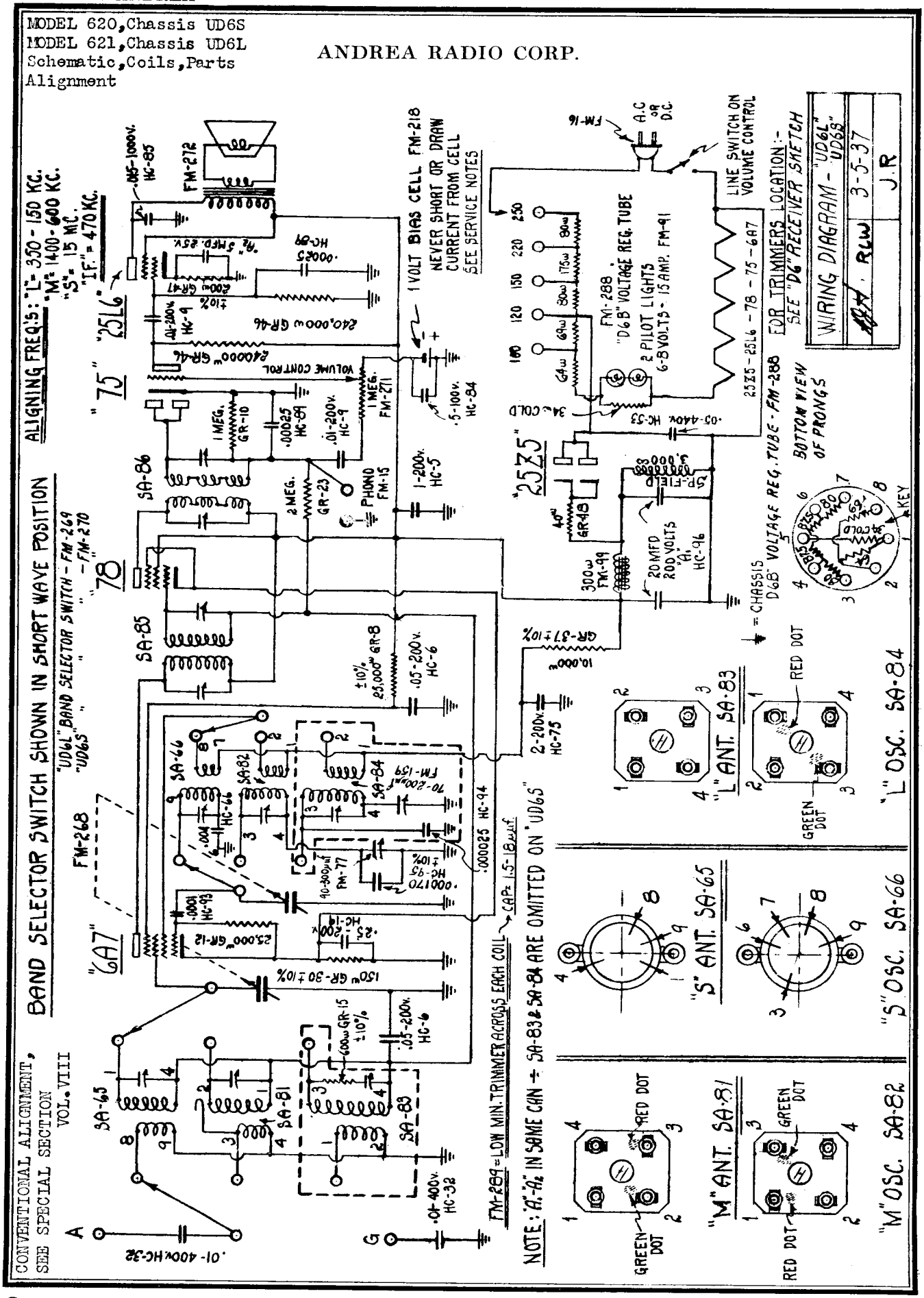

©John F. Rider, Publisher

Schematic, Trimmers
Parts

ANDREA RADIO CORP.

MODELS 626, 627, 628
Chassis E6B

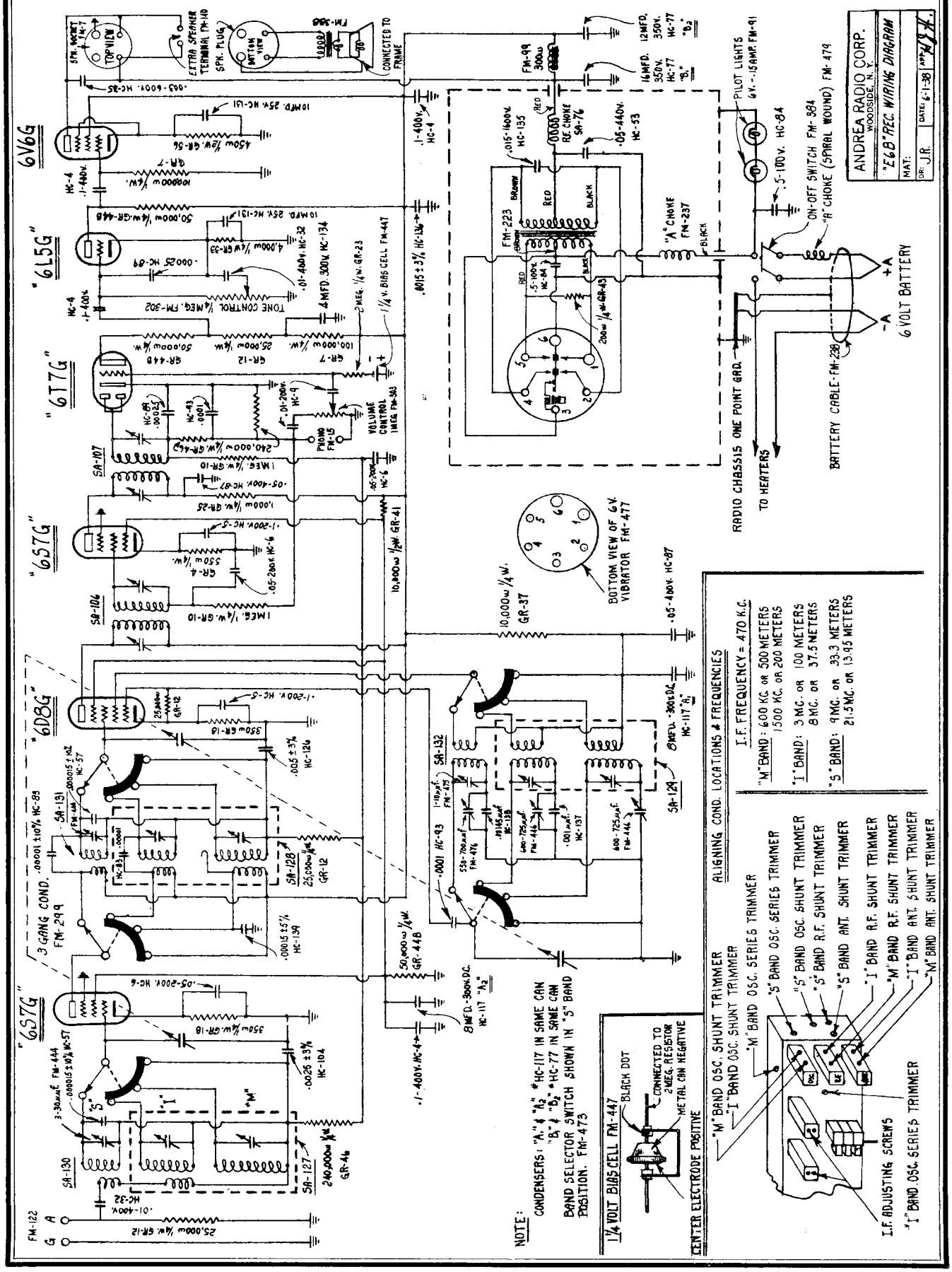

©John F. Rider, Publisher

MODELS 626,627,628
Chassis E6B
Socket,Trimmers
Alignment

ANDREA RADIO CORP.

Andrea Radio

CHASSIS NO. E6B - MODEL NOS. 626, 627, 628
FOR USE WITH A 6 VOLT WET ACCUMULATOR.

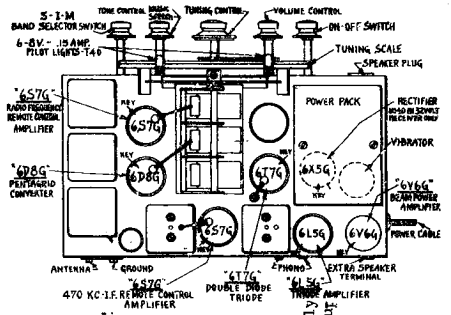

470 KC. ALIGNMENT:

1. Connect the high-potential output lead from your test generator in series with a .1 mfd. condenser to the grid of the 6D8G tube.

2. Connect the output voltmeter (copper oxide rectifier type) across the voice coil of the speaker.

3. Set the generator at 470 kc. and adjust the generator output attenuator until a small output reading is obtained on the output meter.

4. Adjust both trimmers on the top of the first and the second IF transformers (see diagram) for maximum output.

5. Retrim the first IF trimmer carefully. This completes the IF alignment.

MEDIUM BAND "M" ALIGNMENT:

1. Turn the wave band selector switch on the set to the M position and set the generator for 1,400 kc. Connect the high-potential lead of the generator in series with a .1 mfd. condenser to the grid of the 6D8G tube. Tune the receiver to 1,400 kc. (214.3 m.) on the tuning scale. If no signal is heard, leave the scale pointer at 1,400 kc., and adjust the oscillator coil shunt trimmer slowly until a signal is heard.
2. The oscillator coil of the receiver and the dial are now set correctly, assuming that the test generator calibration is correct.

3. Remove the generator lead from the grid of the 6D8G. Replacing the .1 mfd. condenser by a .00025 mfd. condenser, connect the lead to the antenna terminal of the receiver, leaving all the other settings the same.

4. Adjust the RF coil shunt trimmer, and the ANT coil shunt trimmer for maximum signal response.

5. Retune the generator to 600 kc. (500 m.), and tune the receiver to this same frequency.

6. Adjust the oscillator coil series trimmer slowly, while rotating the gang condenser back and forth slightly for each small adjustment of the series trimmer. Continue this until a further adjustment of the trimmer does not increase the signal further. During this adjustment, do not touch the ANT, RF, or OSC shunt trimmers.

7. Reset the test generator and the receiver to 1,400 kc. Tune the test signal accurately on the receiver. Adjust the ANT and RF shunt trimmers slightly for the maximum output. DO NOT ADJUST THE OSC SHUNT TRIMMER. This completes the alignment of the M band.

SHORT WAVE "S" BAND ALIGNMENT:

1. Turn the wave band selector switch on the receiver to the "S" position. Replace the .00025 mfd. condenser with a 400-ohm resistor.

2. The following adjustment is necessary only if the dial calibration is badly out of line. Otherwise, proceed with steps 3 and 4:

Set the signal generator at 21,500 kc. and the receiver at 21.5 mc. Adjust the oscillator shunt trimmer slowly between maximum and minimum. A signal will be heard at two settings of this trimmer, one near the minimum capacity (plates open), and the other, near the maximum capacity (plates closed). This trimmer should be left at the position where the signal is heard near the minimum capacity. The adjustment near the maximum capacity is the image frequency setting, as can be determined from the previous explanation of image frequency.

3. Align the RF shunt trimmer for maximum signal. During this adjustment, be certain to rotate the gang condenser back and forth for each small adjustment of the RF shunt trimmer.

4. Align the antenna shunt trimmer for maximum signal. During this adjustment, be certain to rock the gang condenser back and forth for each small change of the antenna shunt trimmer until you have obtained maximum signal response. Retrim the RF shunt trimmer for any small change. Check to see that the alignment was not made on the image frequency. (See previous notes.)

5. Set the generator to 9,000 kc., and retune the receiver until the signal is picked up. Adjust the OSC series trimmer slowly, rocking the gang condenser for each small change of the trimmer, until you cannot increase the signal further. DO NOT TOUCH THE ANT, RF, OR OSC SHUNT TRIMMERS DURING THIS ADJUSTMENT.

6. Reset the generator at 21,500 kc., and retune the receiver until the signal is picked up. Retune the ANT and RF shunt trimmers for final, critical setting. During this adjustment, do not touch the OSC shunt trimmer. The S band is now aligned.

SPECIAL "S" BAND ALIGNMENT CHECK:

If you are not experienced in the S band alignment you can check the individual coils very simply in this manner:

Apply the generator signal through a .1 mfd. condenser to the grid of the 6D8G and carry out the procedure outlined above. This will tell you whether the OSC shunt trimmer only is adjusted correctly, or the right signal setting has been used on the test generator. In this case ONLY the image and fundamental will have the same intensity.

When you are sure that the oscillator circuit is correct, put the signal on the grid of the 6S7G RF tube, and repeat the procedure on the RF coil. In this case, when the alignment is correct, the image will be lower in volume than the fundamental.

Replace the .1 mfd. condenser in the generator lead with a 400-ohm resistor and connect it to the antenna terminal of the set. Repeat the adjustment procedure outlined above for the antenna circuit.

This method assures you of correct individual alignment on each coil. Finally, touch up each coil except the OSC as outlined above in 3 and 4.

INTERMEDIATE "I" BAND ALIGNMENT:

Put the wave band switch at the I position, set the generator at 8,000 kc., and the receiver at 8 mc. Align the ANT and RF shunt trimmers for maximum signal. Be sure to rock the gang condenser during this adjustment. Then set the signal generator at 3,000 kc. and the receiver at 3 mc. Adjust the OSC series trimmer for maximum signal, rocking the gang condenser for each small adjustment of the trimmer. Reset the generator at 8,000 kc. and the set at 8 mc. and retrim the ANT and RF shunt trimmers for maximum signal. This completes the alignment of the I band.

CONNECTING THE RECEIVER:- Models 626,627,628 for 6volt service, are furnished with a connecting cable terminating in clips. One clip is stamped ( ), the other ( ). The ( ) must always be connected to the POSITIVE( ) accumulator terminal or DAMAGE TO THE RECEIVER WILL RESULT. In installing the receiver, the accumulator should be kept within the length of the receiver "A" cable leads. NEVER ATTEMPT TO INCREASE THE LENGTH, OTHERWISE PERFORMANCE MAY BE IMPAIRED.

Models 726, 727, and 728 for 32 volt D.C. come equipped with line cord and plug for insertion in 32volt D.C. outlet

PHONOGRAPH CONNECTIONS:- This receiver incorporates "PHONO" connections whereby the high quality audio system can be used to electrically reproduce phonograph records. For this purpose, a high impedance pickup or a low impedance unit with a matching transformer, may be inserted in the PHONO connection at the rear of the chassis. The regular volume control will regulate the phonograph volume. To again use the radio receptor for radio, the pickup connections must be removed, or poor radio reception will result.

©John F. Rider, Publisher

ANDREA RADIO CORP.

MODELS 630, 631. CHASSIS NUMBER PUE 6L.

MODELS 630,631
Chassis PUE6L
Schematic, Coils
Alignment, Parts

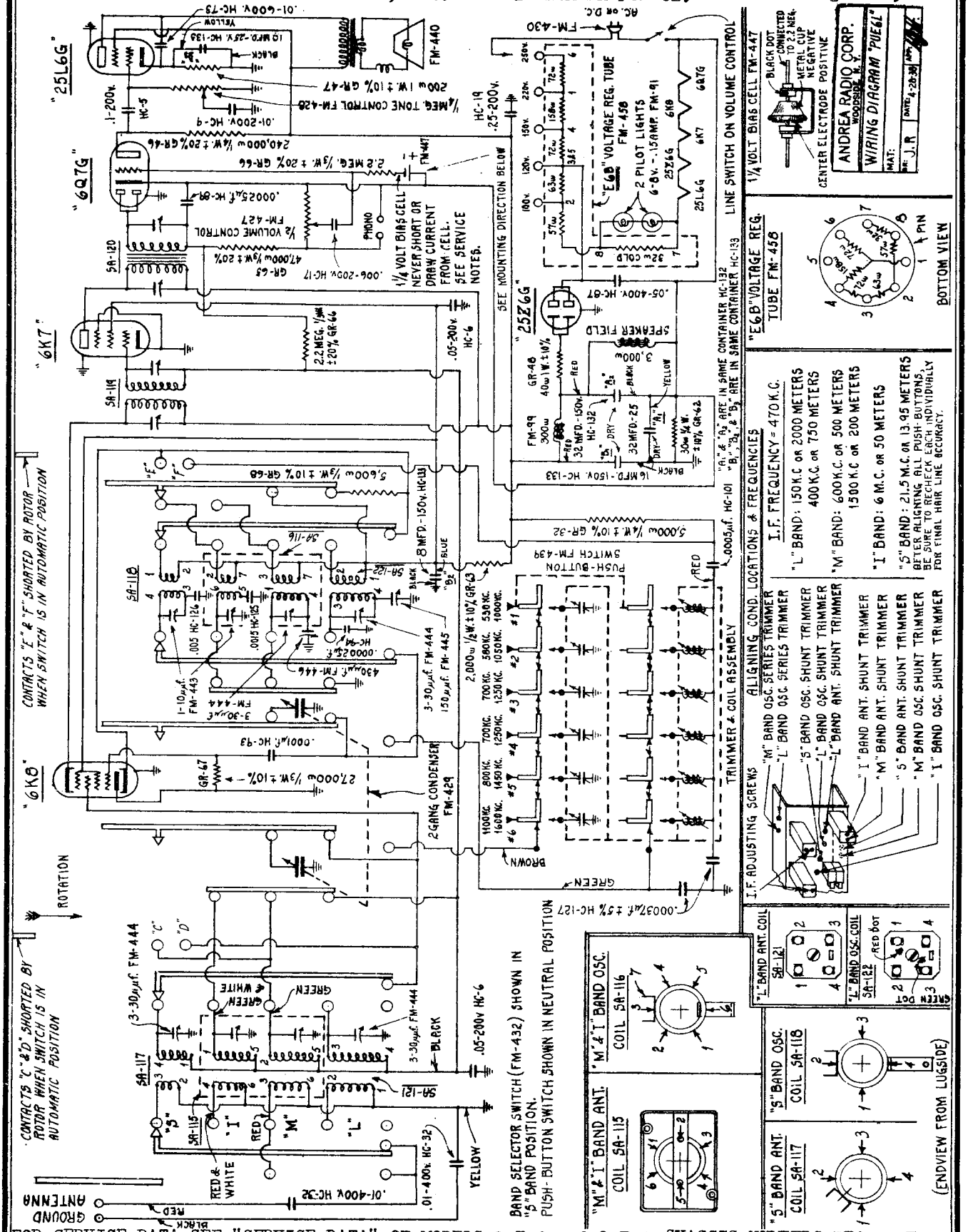

FOR SERVICE DATA, SEE "SERVICE DATA" OF MODELS 1-E-6 and 2-E-6, CHASSIS NUMBERS PE6L, PE6S.

©John F. Rider, Publisher

MODELS 630,631
Chassis PUE6S
Schematic,Coils
Alignment,Parts

ANDREA RADIO CORP.

MODELS 630, 631. CHASSIS NUMBER PUE 6S.

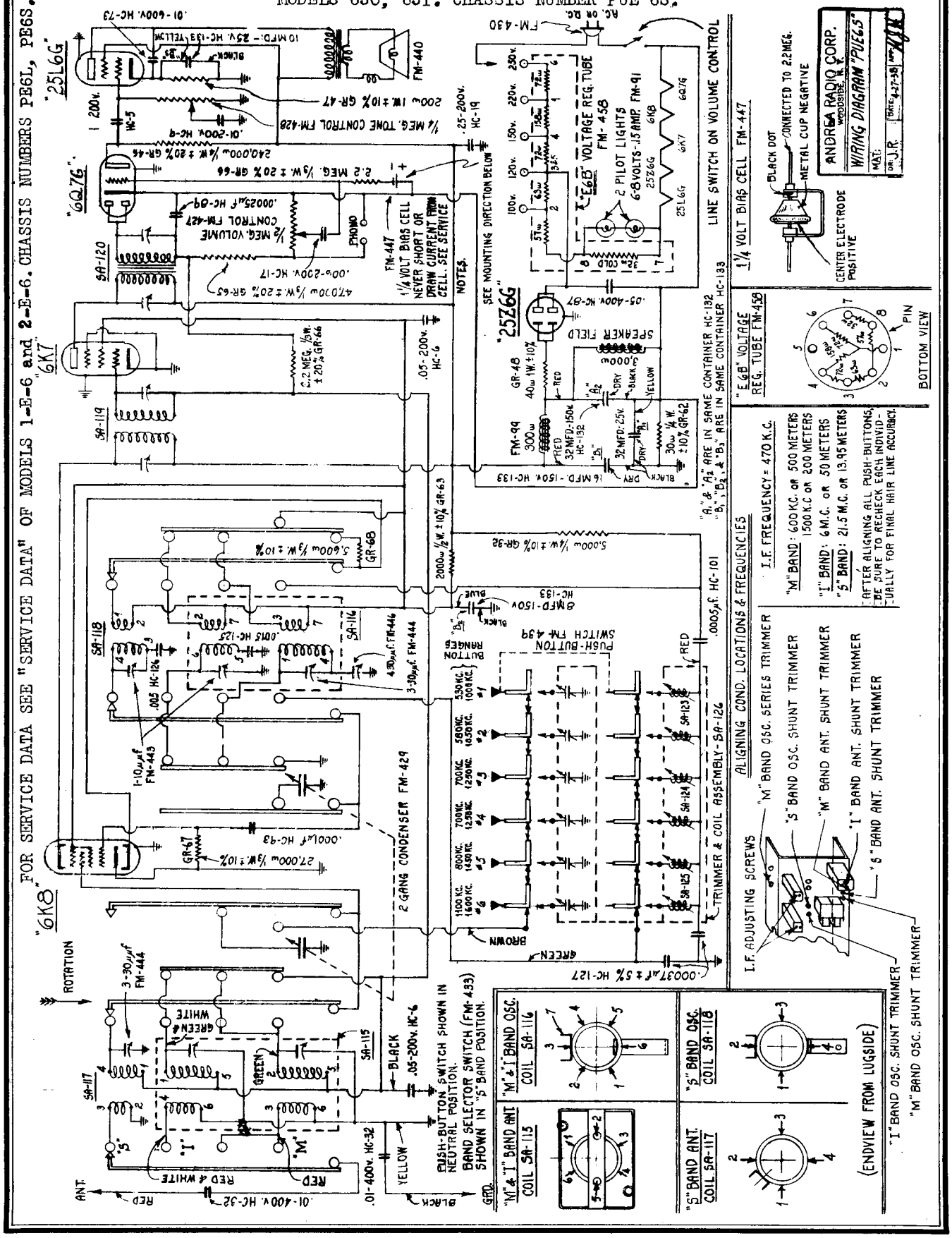

©John F. Rider, Publisher

©John F. Rider, Publisher

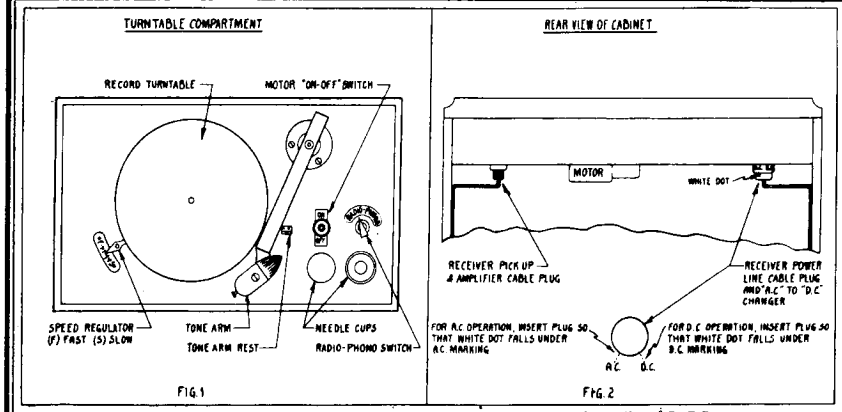

INSTRUCTIONS FOR INSTALLING AND OPERATING ANDREA AC-DC PHONOGRAPH MODELS 634 - 635

WARNING!

For protection in shipping, the radio chassis of this combination is bolted tightly to the shelf on which it is mounted. Before connecting this instrument to the power line, loosen the four mounting bolts, located under the shelf by turning them out about 6 turns, in order that the chassis can float freely on the shock-absorbing strips. Unless this is done, objectionable noises may be set up in the loud speaker.

MOTOR VOLTAGE:

Andrea phonograph combinations are connected at the factory for use on 110-130 V., 50-60 cycles AC, or 110-130 V. DC. Other voltages for AC-DC models are available only on special order. To change the connections for AC, or DC-current, remove the plug shown in Fig. 2, and turn it so that the white dot points toward the current required, and insert the plug again.

RECEIVER VOLTAGE:

Be sure to have the service man check the line voltage tap on the radio receiver chassis. This controls the radio ONLY, and does NOT change the phonograph motor.

RADIO-PHONOGRAPH SWITCH:

Fig. 1 shows the arrangement of the phonograph turntable controls. The radio-phonograph switch, when in the RADIO position, connects the speaker for radio reception. When this switch is turned to the PHONO position, current is connected to the turntable motor, and the pick-up, and the speaker are connected for reproducing phonograph records. The phono-motor can be turned on or off independently by the motor control switch, shown in Fig. 1.

FOR OTHER DATA, SEE THE PAGES FOR CHASSIS PUE6S & PUE6L

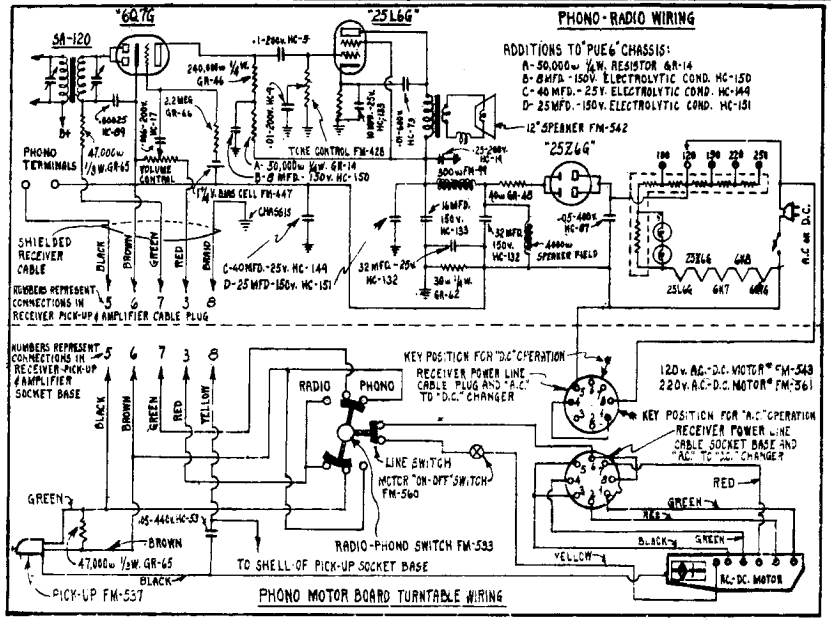

VOLUME & TONE CONTROL

The volume control and tone control on the front of the cabinet regulate both the radio and phonograph.

TURNTABLE SPEED:

Recordings are made with the turntable moving at the rate of 78 revolutions per minute. Consequently, the best reproduction is obtained at that speed. Put the record on the turntable, with a slip of paper part way under it so that the paper can be used as a revolution counter. Then adjust the speed control fast or slow, until the turntable revolves 78 times each minute.

PHONOGRAPH NEEDLES:

Although various types of needles are sold for use in phonographs only the standard size loud or medium needles are recommended. Special needles may be entirely unsuited for use on this machine and may result in loss of tone quality. There is a wedge-shaped groove under the head of the pick-up to direct the needle into the mounting hole. When you become acquainted with the use of this needle guide, you will find it a very easy matter to change needles quickly.

SPECIAL NOTES:

Always keep your records covered. Otherwise dirt will collect in the record grooves, resulting in high needle scratch and poor quality. Always store the records in a cool place. Be sure to replace needle after each playing. Never allow the pick-up to fall on the needle point.

MODELS 1402,1404,1406
1408,1410

ANDREA RADIO CORP.

Chassis UD14S
Schematic, Coils, Alignment
Parts

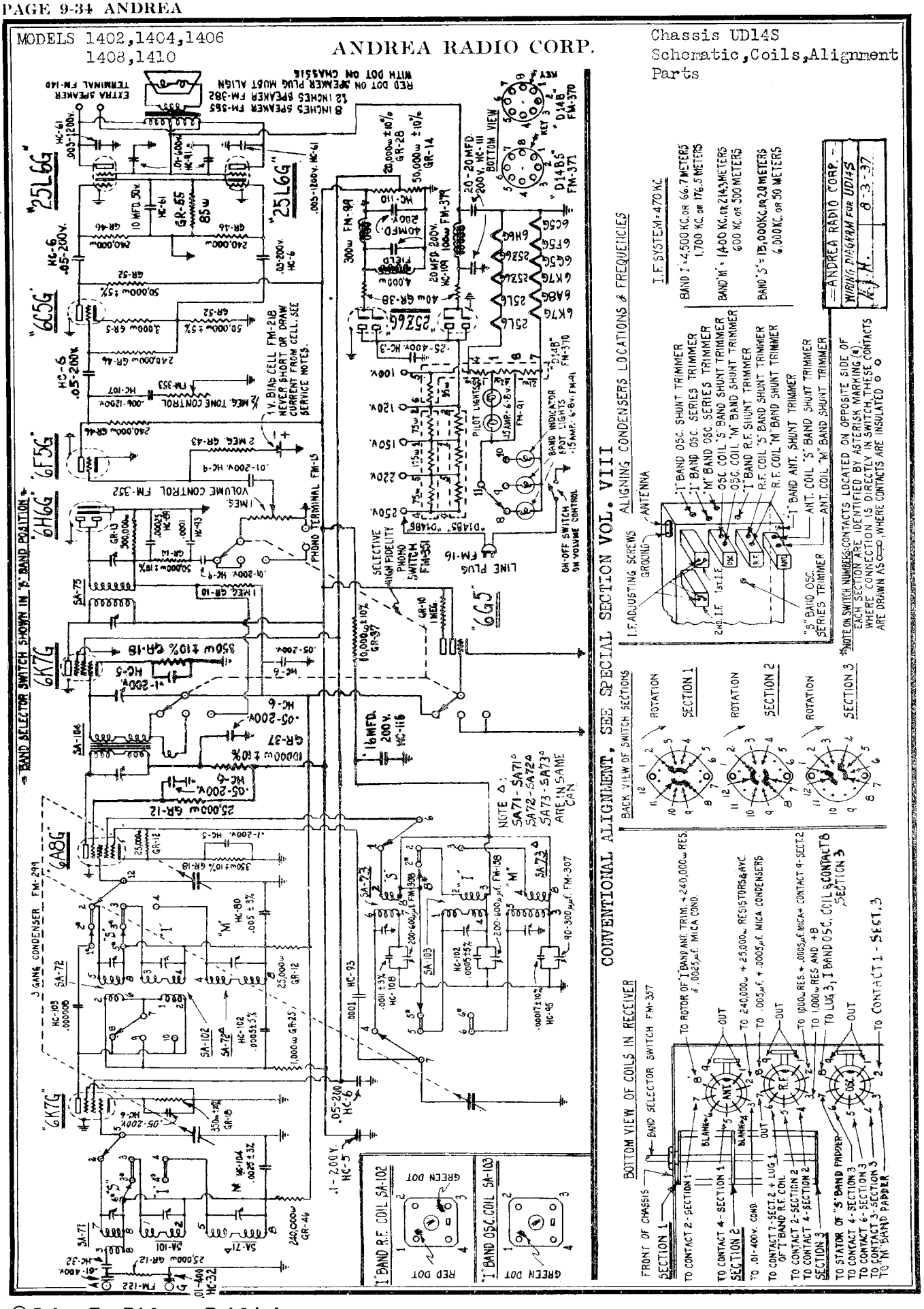

©John F. Rider, Publisher

IMPORTANT AC-DC MODEL NOTES

Special notes on connecting AC-DC sets: NEVER connect a ground wire directly to the metal chassis. The external ground wire must be connected ONLY to the ground (black) lead. ALWAYS disconnect the power from the set before removing the rear dust cover, to avoid electric shock. When operating an AC-DC set on direct current, if no signals are heard after the set has been turned on for one minute, reverse the plug in the electric light socket.

BAND SWITCH

Band switch controls button tuning, manual tuning, and phonograph: The right hand, outside knob on the Standard Tuning or Long Wave Tuning sets is marked:

Standard Tuning	Long Wave Tuning
S I M A P	S I M L A P

S—Short Wave I—Intermediate Short Waves M—Broadcast or Medium Waves.
L—Long Waves A—Automatic button tuning on broadcast or medium waves
P—Phonograph.

VOLUME CONTROL

DIAL TUNING

AUTOMATIC TUNING

BAND SWITCH

TONE CONTROL

OFF ON

Automatic push button tuning operates only on the broadcast or medium wave band when the switch is in the "A" position. Manual tuning must be used for the other wave bands. On the table models and consoles, the phonograph pick-up terminals are connected to the high-fidelity audio-amplifier when the band switch is in the "P" position. On the combination models, turning the band switch to the P position turns on the current for the phonograph motor and connects the pick-up to the amplifier.

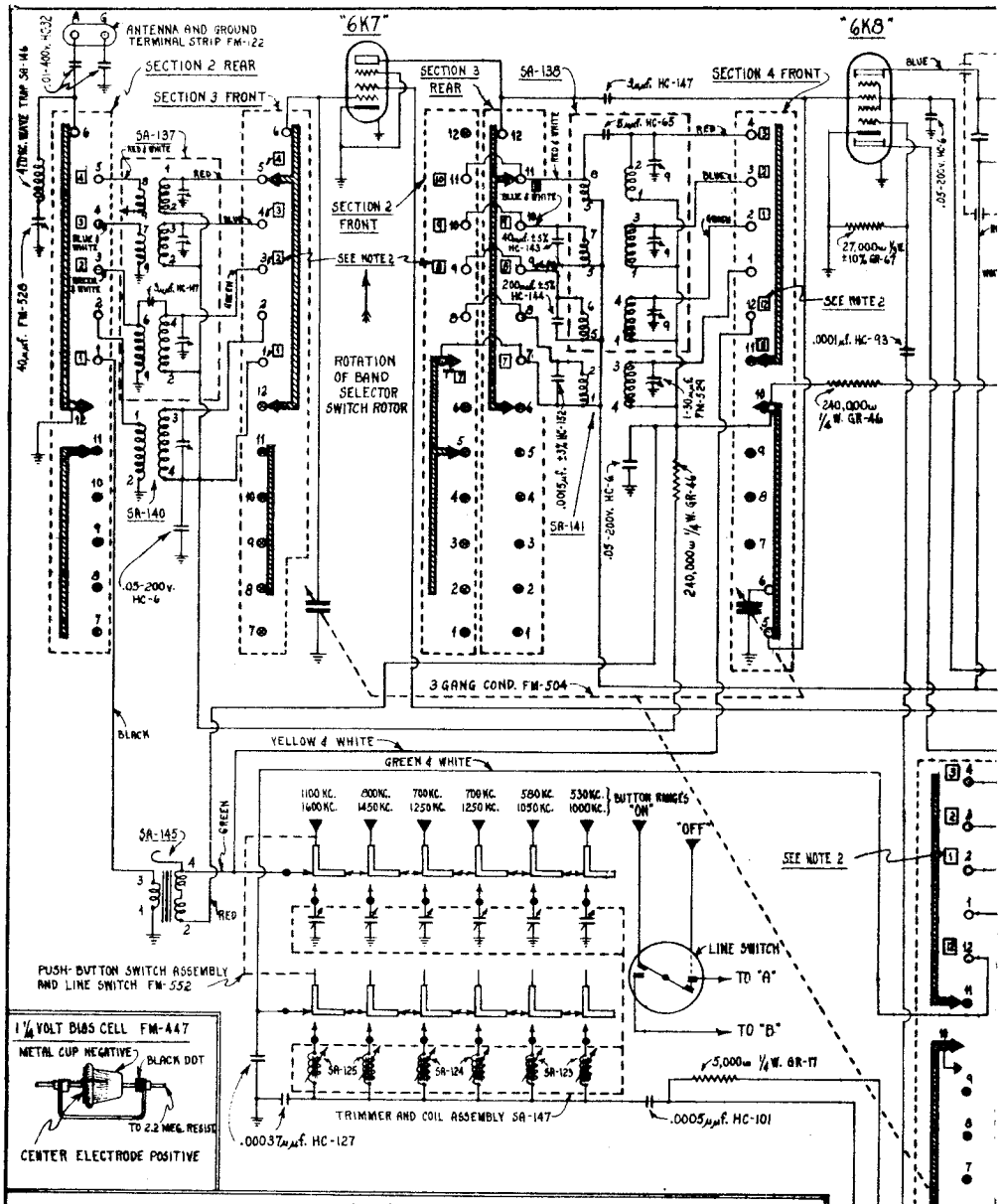

AC-DC Voltage Taps and Frequency: Switch on models 1530 and 1531 provides for operation on 90-110, 110-130, 140-160, 210-230, and 240 to 260 volts, 40-60 cycles.

©John F. Rider, Publisher

ADIO CORP.

MODELS 1530,1534,1536,1538,Chassis PUES
MODELS 1531,1533,1535,1537,Chassis PUEL
Schematic,Coils,Trimmers,Data,Parts

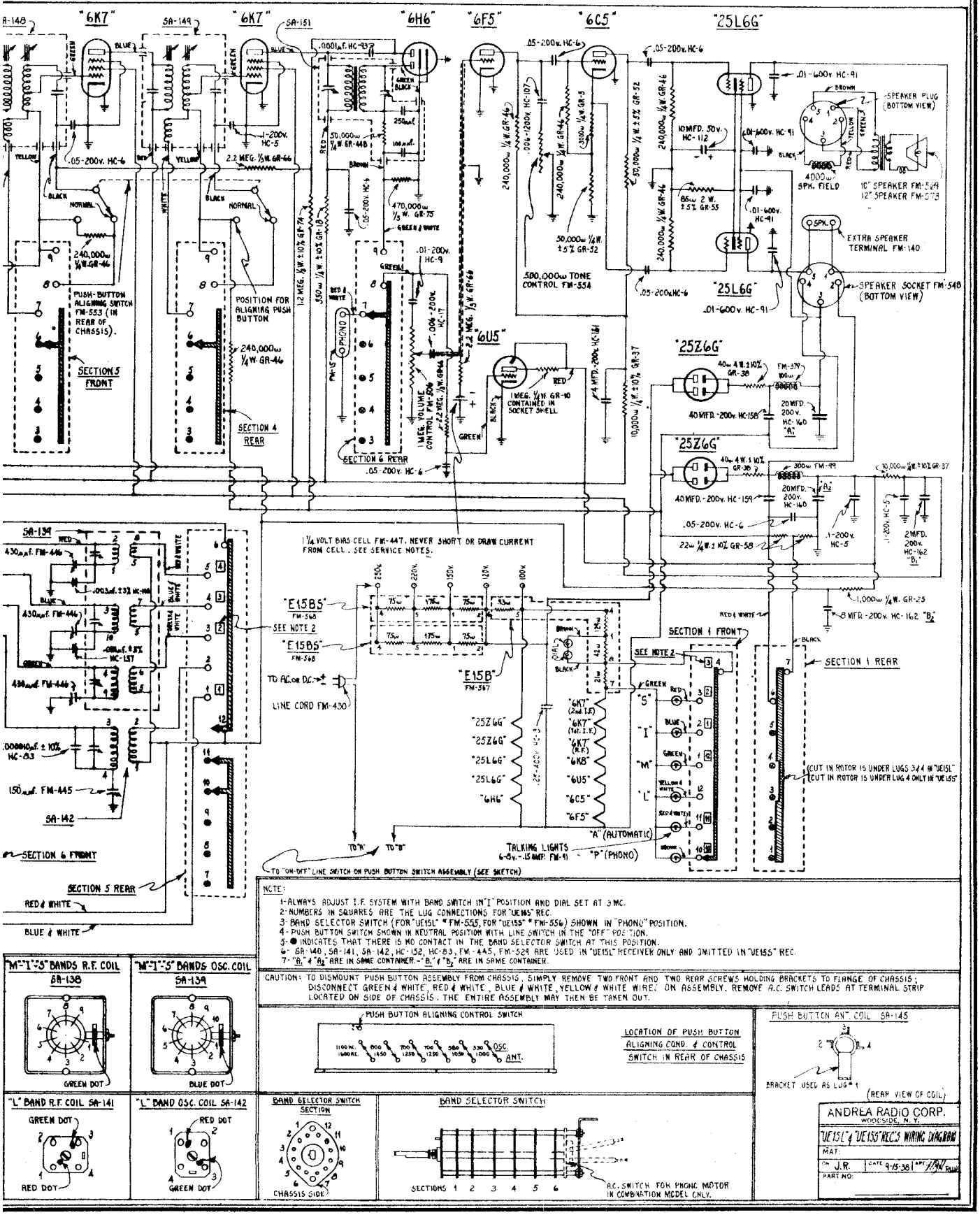

NOTE:
1- ALWAYS ADJUST I.F. SYSTEM WITH BAND SWITCH IN "I" POSITION AND DIAL SET AT 3 MC.
2- NUMBERS IN SQUARES ARE THE LUG CONNECTIONS FOR "UE15S" REC.
3- BAND SELECTOR SWITCH (FOR "UE15L" "FM-555, FOR "UE15S" "FM-556) SHOWN IN "PHONO" POSITION.
4- PUSH BUTTON SWITCH SHOWN IN NEUTRAL POSITION WITH LINE SWITCH IN THE "OFF" POSITION.
5- ● INDICATES THAT THERE IS NO CONTACT IN THE BAND SELECTOR SWITCH AT THIS POSITION.
6- GR-140, SA-141, SA-142, HC-152, HC-83, FM-445, FM-529 ARE USED IN "UE15L" RECEIVER ONLY AND OMITTED IN "UE15S" REC.
7- "B1" & "B2" ARE IN SAME CONTAINER. - "B1" & "B2" ARE IN SAME CONTAINER.

CAUTION: TO DISMOUNT PUSH BUTTON ASSEMBLY FROM CHASSIS, SIMPLY REMOVE TWO FRONT AND TWO REAR SCREWS HOLDING BRACKETS TO FLANGE OF CHASSIS; DISCONNECT GREEN & WHITE, RED & WHITE, BLUE & WHITE, YELLOW & WHITE WIRES ON ASSEMBLY. REMOVE A.C. SWITCH LEADS AT TERMINAL STRIP LOCATED ON SIDE OF CHASSIS. THE ENTIRE ASSEMBLY MAY THEN BE TAKEN OUT.

"M" "1"-"5" BANDS R.F. COIL SA-138
GREEN DOT

"M" "1"-"5" BANDS OSC. COIL SA-139
BLUE DOT

PUSH BUTTON ALIGNING CONTROL SWITCH
1100 KC. 1500 KC. 800 1450 700 1250 700 1250 580 1050 530 1000 OSC. ANT.

LOCATION OF PUSH BUTTON ALIGNING COND. & CONTROL SWITCH IN REAR OF CHASSIS

PUSH BUTTON ANT. COIL SA-145
BRACKET USED AS LUG #1
(REAR VIEW OF COIL)

"L" BAND R.F. COIL SA-141
GREEN DOT
RED DOT

"L" BAND OSC. COIL SA-142
RED DOT
GREEN DOT

BAND SELECTOR SWITCH SECTION
CHASSIS SIDE

BAND SELECTOR SWITCH
SECTIONS 1 2 3 4 5 6
A.C. SWITCH FOR PHONO MOTOR IN COMBINATION MODEL ONLY.

ANDREA RADIO CORP.
WOODSIDE, N. Y.
"UE15L" & "UE15S" REC'S WIRING DIAGRAM
MAT:
DR. J.R. DATE 9-15-36 APP.
PART NO.

Alignment,Notes

ANDREA RADIO CORP.

MODELS 1530,1534,1536,1538
Chassis PUES
MODELS 1531,1533,1535,1537
Chassis PUEL

Andrea Radio

Standard Tuning **1530** | Long Wave Model **1531** | Standard Tuning **1536** | Long Wave Tuning **1535**
Standard Tuning **1534** | Long Wave Tuning **1533** | Standard Tuning **1538** | Long Wave Tuning **1537**

AC-DC Voltage Taps and Frequency: Switch on models 1530 and 1531 provides for operation on 90-110, 110-130, 140-160, 210-230, and 240 to 260 volts, 40-60 cycles.

(Chassis Numbers PUE L and PUE S)

I. F. REALIGNMENT GENERALLY SUFFICIENT

As a rule, it is not necessary to readjust the short wave oscillator and antenna shunt and series trimmers unless they have been tampered with, or require replacing. Consequently, careful realignment of the I.F. system is all that requires attention, ordinarily. Before making any adjustments, tune in one particular station and note the quality of reception so that you can check the improvement after the I.F. system has been realigned.

NOTES ON REALIGNING THE BANDS

During the aligning measurements, the output of the signal generator must be kept so low that it will not cause the AVC circuit in the set to function. In other words, when the volume control on the set is turned to maximum, the output should not show more than .5 volt across the voice coil, or 50 milliwatts in the plate circuit of the output tube.

Generally, at frequencies above 7,000 kc., the signal generator frequency will change with each adjustment of the generator output attenuator control. Hence, the receiver must be retuned each time the attenuator is adjusted.

Some generators cause trouble by direct radiation to the set at frequencies above 8 mc. Experience indicates that more accurate alignment is possible when the generator is separated by several feet from the receiver under test, in order to eliminate this direct pickup.

Alignment can be carried out on these models at any band without affecting any of the other bands.

470 KC. I. F. ALIGNMENT

During the alignment of the I.F. system, be sure that the push-button alignment switch, located at the rear of chassis, is turned to the position marked "HERE while adjusting buttons". After the alignment has been completed, the switch must be turned to the position marked "HERE for normal operation" Otherwise, the alignment will not be accurate.

Connect the high-potential lead of the signal generator, in series with a .1 mfd. condenser, to the grid of the 6K8 tube. Turn the wave band switch to "I" Band. Set the generator at 470 kc., and adjust the output until a small deflection is obtained in the output meter. Adjust the screws on the side of the 1st and 2nd I.F. transformers (See circuit diagram) for maximum deflection on the output meter. When this has been completed, touch up each adjustment again for the final setting. Next, disconnect the generator from the grid of the 6K8 tube. This completes the alignment of the I.F. system.

"S" BAND ALIGNMENT

Turn the wave band switch to the "S" position, and connect the high-potential lead of the generator, in series with a .1 mfd. condenser, to the grid of the 6K8 tube.

The following oscillator adjustment is necessary only if the dial calibration is considerably out of line. If it is not, align only the R.F. and Antenna trimmers.

Set the signal generator at 21,500 kc. and the receiver at 21,5 mc. Adjust the oscillator shunt trimmer slowly between maximum and minimum. A signal will be heard at two settings of the trimmer, one near the minimum capacity (plates open), and the other near the maximum capacity (plates closed). Set the trimmer at the point where the signal is heard near the minimum capacity. The adjustment near the maximum capacity is at the image frequency. This will tell you whether the OSC shunt trimmer only is adjusted correctly, or the right signal setting has been used on the test generator. In this case ONLY the image and fundamental will have the same intensity.

Remove the generator from 6K8 and put it on 6K7 R.F. tube control connection. Align the R.F. shunt trimmer for maximum signal. During this adjustment, be certain to rotate the gang condenser back and forth for each small adjustment of the R.F. shunt trimmer. Remove the generator connection from 6K7 and connect it in series with 400 ohm. resistor to the "Ant" terminal of the receiver. Align the antenna shunt trimmer for maximum signal. During this process, rock the gang condenser back and forth for each small change of the antenna shunt trimmer, until you have obtained maximum response. Touch up the R.F. shunt trimmer for final setting. Check to see that alignment was not made on image signal (See section following).

Set the generator at 8,000 kc., and adjust the receiver to pick up the signal. Adjust the oscillator series trimmer carefully, rocking the gang condenser for each small change of the trimmer, until you obtain maximum response.

Do not touch the antenna, R.F., or oscillator shunt trimmers during this adjustment.

Set the generator at 21,500 kc., and tune the receiver for that signal. Retune the antenna and R.F. shunt trimmers for exact, final settings. During this adjustment, do not touch the oscillator shunt trimmer. This completes the adjustment of the "S" band.

FUNDAMENTAL AND IMAGE FREQUENCY NOTES:

A simple method of checking the receiver and signal generator to determine if they are tuned for correct alignment is as follows:

Set the signal generator at 21,500 kc. and tune the receiver slowly from about 20,000 kc. to 22,500 kc. Two signals should be heard, 940 kc. apart. One of them will be lower in frequency than 21,500 kc., and the other will be higher. The higher frequency, as indicated on the dial, is the correct aligning frequency, and the lower one is the image.

As an additional check, leave the receiver tuned to the higher frequency. Very slowly, increase the generator frequency from 21,500 kc. to about 22,500 kc. A signal will be heard near 22,500 kc. if all the settings are correct for alignment. If there is no signal, the original settings were on the image frequency. In that case, you must start again from the beginning, in order to be sure of accurate results.

After you have found the correct settings, the image, or lower, frequency response on the receiver will always sound weaker than the true signal.

INTERMEDIATE "I" BAND ALIGNMENT:

Put the wave band switch at the "I" position, set the generator at 6,000 kc., and the receiver at 6 mc. Align the ANT and R.F. shunt trimmers for maximum signal. Be sure to rock the gang condenser during this adjustment. Then set the signal generator at 2,000 kc. and the receiver at 2 mc. Adjust the OSC series trimmer for maximum signal, rocking the gang condenser for each small adjustment of the trimmer. Reset the generator at 6,000 kc. and the set at 6 mc. and retrim the ANT and R.F. shunt trimmers for maximum signal. This completes the alignment of the "I" band.

MEDIUM BAND "M" ALIGNMENT:

1. Turn the wave band selector switch on the set to the "M" position and set the generator for 1,500 kc. Connect the high-potential lead of the generator, in series with a .1 mfd. condenser, to the grid of the 6K8 tube. Tune the receiver to 1,500 kc., (200 m.) on the tuning scale. If no signal is heard, leave the scale pointer at 1,500 kc., and adjust the oscillator coil shunt trimmer slowly until a signal is heard.

2. The oscillator coil of the receiver and the dial are now set correctly, assuming that the test generator calibration is correct.

3. Remove the generator lead from the grid of the 6K8. Replacing the .1 mfd. condenser by a .00025 mfd. condenser, connect the lead to the antenna terminal of the receiver, leaving all the other settings the same.

4. Adjust the R.F. coil shunt trimmer, and the ANT coil shunt trimmer of the "M" band for maximum signal response.

5. Retune the generator to 600 kc. (500 m.), and tune the receiver to this same frequency.

6. Adjust the oscillator coil series trimmer slowly, while rotating the gang condenser back and forth slightly for each small adjustment of the series trimmer. Continue this until a further adjustment of the trimmer does not increase the signal. During this adjustment, do not touch the ANT, R.F., or OSC shunt trimmers.

7. Reset the test generator and the receiver to 1,500 kc. Tune the test signal accurately on the receiver. Adjust the ANT and R.F. shunt trimmers lightly for the maximum output. DO NOT ADJUST THE OSC SHUNT TRIMMER. This completes the alignment of the "M" band.

470 KC. CODE REJECTION CIRCUIT ALIGNMENT:

Set wave band switch on "M" position and tune receiver to 530 kc. Connect the high-potential lead of generator in series with a .00025 mfd. (250 mmf.) condenser to Antenna terminal of receiver. Then turn signal generator to 470 kc. and increase output until a loud signal is heard. Adjust 470 kc. code condenser for MINIMUM SIGNAL. This must be done carefully otherwise poor results may occur.

"L" BAND ALIGNMENT

1. Turn the wave band selector switch to the "L" position. Set signal generator for 150 kc. and connect generator high-potential lead in series with a .1 mfd. condenser to the grid of 6K8 tube.

2. Set receiver dial to 150 kc. (2,000 meters).

3. Adjust the L.W. series oscillator trimmer until the loudest signal is heard. This point is required because of the wide frequency range the L.W. series oscillator trimmer has on the oscillator frequency. Due to this wide change in frequency it is possible that several different adjustment points in the L.W. oscillator series trimmer will produce output signals, but only one of these is correct (the loudest).

4. Set the generator and receiver dial to 400 kc. (750 meters) and adjust the L.W. oscillator shunt trimmer until a signal is heard.

5. After readjusting the L.W. oscillator shunt trimmer, it is very important that the generator and the set dial be set for 150 kc. (2,000 meters) and the L.W. series oscillator trimmer readjusted in accordance with paragraph 3. Set the generator and receiver dials back to 400 kc. (750 meters) and adjust L.W. oscillator shunt trimmer until a signal is heard.

6. Remove generator lead from the grid of the 6K8. Replace the .1 mfd. condenser with a .00025 mfd. condenser, and connect the lead to the antenna terminal of the receiver.

7. Set generator and receiver dial to 400 kc. (750 meters).

8. Adjust the antenna and the R.F. shunt trimmers for maximum output deflection.

9. Change the generator and receiver to 150 kc. (2,000 meters). Adjust the L.W. series oscillator trimmer for maximum deflection. BE CERTAIN TO ROTATE GANG CONDENSER FOR EACH ADJUSTMENT OF THE SERIES TRIMMER.

10. Repeat the adjustments set forth in paragraphs 7 and 8, or the receiver will not be aligned correctly because of the effect described in paragraph 3.

11. After carrying out instruction 10, be sure to repeat 9.

12. Both 8 and 9 must be repeated until it is noticed that the trimmers no longer improve the alignment. The long wave band is now aligned.

SPECIAL NOTES

To remove the push-button assembly from the chassis, simply take out the four screws holding the brackets to the front and rear flange of the chassis, and unsolder the AC switch leads at the side of the chassis plus the yellow and white lead on the push-button switch, and the blue and white, red and white, and green and white wires on the terminal strip. (See circuit diagram.) In this way any servicing is easily handled. The receiver, of course, can be operated and worked normally without this assembly on all bands except the "A" band.
In case the assembly has been removed, it is advisable to readjust each button after remounting.

BIAS CELL

This receiver incorporates a bias cell in the grid of the audio tube, as shown in the wiring diagram. In case you remove the cell, handle it with the greatest care. Do not put your fingers across the terminals, for this will have the effect of short-circuiting the electrodes, and the voltage will not return to normal for several hours.

NEVER test this cell with an ordinary voltmeter. Since this a "no-current" cell, the only way to test it accurately is with a vacuum tube voltmeter. Always insert the cell in the mounting assembly so that the metal container (negative side) contacts the cell-holder pin with the black dot. This cell can be expected to render at least three years' service before it requires replacement.

©John F. Rider, Publisher

MODELS 1530,1534,1536,1538
Chassis PUES
MODELS 1531,1533,1535,1537
Chassis PUEL

ANDREA RADIO CORP.

Tuner Data,Phono.

AC-DC MODELS

Standard Tuning **1530** Long Wave Model **1531**

AC-DC COMBINATION MODELS

Standard Tuning **1536** Long Wave Tuning **1535**

AC-DC CONSOLE MODELS

Standard Tuning **1534** Long Wave Tuning **1533**

AC-DC AUTOMATIC COMBINATIONS

Standard Tuning **1538** Long Wave Tuning **1537**

SETTING BUTTON CONTROLS CHASSIS NUMBERS PUE-L, PUE-S.

Accurate adjustments can be made easily: The simplicity of the Andrea Radio push button controls, requiring only the use of a thin-blade screwdriver, makes it easy to set them accurately. This is essential, for unless the controls are set exactly, the tone quality will be destroyed.

CHOOSING YOUR STATIONS

Make a list of the stations: Set down the call letters of the six stations required, and put them in the order of their kilocycles rating, the lowest at the top, corresponding to Station 1 selecting button at the left. The kilocycle tuning ranges of the button controls are:

Extreme Left	OFF
	ON
	Station 1— 530 to 1000 kc.
	Station 2— 580 to 1050 kc.
	Station 3— 700 to 1250 kc.
	Station 4— 700 to 1250 kc.
	Station 5— 800 to 1450 kc.
Extreme Right	Station 6—1100 to 1600 kc.

It is necessary, of course, to choose stations whose kilocycle ratings come within these button tuning ranges. The ranges given in the list above are conservative. Consequently, it may be possible to tune in a station which is just outside the range of any particular button control. For example, on Station 3, although, the range is shown as 700-1250 kc., it may be possible to tune in a station on 660 kc., or one on 1300 kc.

MARKING THE BUTTONS

Remember the transparent disks: When you have made up your station list, locate the call letters on the station-call marker sheets, and punch them out carefully. If lettered markers are not provided for the stations you want, use the blank markers, and print the station letters on them.

First insert the "OFF" marker in the extreme left hand button, and the "ON" marker in the adjacent button. Then, after selecting the proper markers for the stations on your list, insert the markers in the same order as your kilocycle list, starting with Station 1 on the third button from the left. Don't attempt to glue the markers in place. Instead, put a transparent disc over each marker, that will hold it in place permanently. Use the end of a lead pencil to press these discs into position. In case you want to change a marker, you can pry it out with the point of a pin.

ADJUSTING THE CONTROLS

Remember to set the button adjusting switch: At the rear of the chassis is a switch with a red knob. While adjusting the controls, and only at that time, the knob should be turned to the upper position. Put the wave band switch in the "M" position, for dial tuning.

Tune in the station using call letters you have put on the first button. Then turn the band switch to position "A". Push in the button you are going to adjust, and turn the volume control to maximum.
When the set has been turned "ON" for at least 10 minutes so that it has become thoroughly warm, you will be ready to make the button adjustments.

The adjusting screws can be reached easily through holes at the rear of the chassis. Each button has two adjustment controls marked "ANT" and "OSC", in pairs. The pair corresponding to the Station 6 on your list is at the extreme left. This set is so designed that the tuning indicator operates with the push-buttons as well as with manual tuning. Therefore, you can adjust the controls with absolute accuracy by watching the opening and closing of the indicator. The exact setting for each adjustment is obtained when the ray is closed as far as possible.

Use a thin-blade screwdriver to adjust the screws. Don't force a thick blade into the slots. First adjust the oscillator screw for Station 1, turning it until you hear the station you tuned in previously on the dial. If the speaker breaks into a howl during this adjustment, turn the Station 1 antenna screw to the right or left until the howl stops. After you have an accurate setting of the oscillator screw, adjust the corresponding antenna screw for maximum volume. The final adjustment should be made by turning the oscillator screw while you watch the opening of the Mystic Ray. Then, in the same way, get a final adjustment for the antenna screw. For a still sharper setting, disconnect the antenna lead. Connect a 6-inch length of insulated wire to the antenna terminal and twist the antenna lead lightly around it. Again, adjust the oscillator and antenna screws for maximum response from each station.

To check the accuracy of the settings, turn the wave band switch to position M. The station should sound practically the same whether the switch is in the A or M position. If there is considerable difference, the station was not tuned accurately with the dial or else the corresponding button controls were not set correctly.

Repeat the same routine for button No. 2, adjusting the No. 2 oscillator and antenna screws, and continue the process in the same way for the other controls.

To change any button to another station, if the station's kilocycle rating is within the range of the corresponding controls, it is only necessary to put in a new button marker, and to reset the controls in accordance with the preceding instructions.

CAUTION

This is very important: When all adjustments have been made, it is necessary to touch up each one again, to assure absolute accuracy. After this has been done, turn the switch with the red knob, at the rear of the chassis, to the lower position marked "HERE for normal operation". Otherwise, loss of efficiency will result. **Last of all, make sure that the antenna is connected again.**

IMPORTANT!

If you find it necessary to replace any part in this receiver, bear this in mind: In order to maintain the high performance standards of Andrea Radio receivers, the components parts on all Andrea models are held to exceedingly close tolerance limits. Furthermore, Andrea components are given the exclusive "Climate Sealed" treatment which protects them from all weather and temperature conditions. Consequently, standard Andrea Radio replacement parts must be used for all service work, for the substitution of ordinary, stock items will result in inferior performance.

PHONOGRAPH RECORDS

Table model: On the table models, connections are provided at the rear of the chassis for plugging in an electric phonograph pick-up, used with a separate turntable. When the band switch is in the "P" position, the pick-up terminals at the back of the chassis are connected to the amplifier.

Console models: The console models use the same cabinet as the combination models, so that you can have a phonograph turntable and pick-up installed in the phonograph compartment provided at any time. The pick-up, which should be plugged into the terminals at the back of the chassis, is connected to the amplifier when the band switch is in the "P" position.

Combination models: These models are so wired that, when the hand switch is turned to the "P" position, current is connected to the turntable motor and the pick-up is connected to the amplifier. On all three types of models, the volume control and the tone control operate with the phonograph.

AUTOMATIC TUNING

Buttons cut in high-fidelity circuits: An important improvement in Andrea push-button tuning is the use of high-fidelity circuits which are cut in when any push-button is operated. This provides extra tone quality for your favorite local stations. At the same time, extra selectivity is obtained on manual tuning.

TALKING LIGHTS

Position of band switch indicated by Talking Lights: The different colored lights on the dial indicate the wave band which is in use, or shows when automatic tuning or the phonograph pick-up are cut in.

©John F. Rider, Publisher

AUTOMATIC RADIO MFG. CO., INC.

MODEL D55
MODEL Tom Thumb, 933, Series 2
Schematics

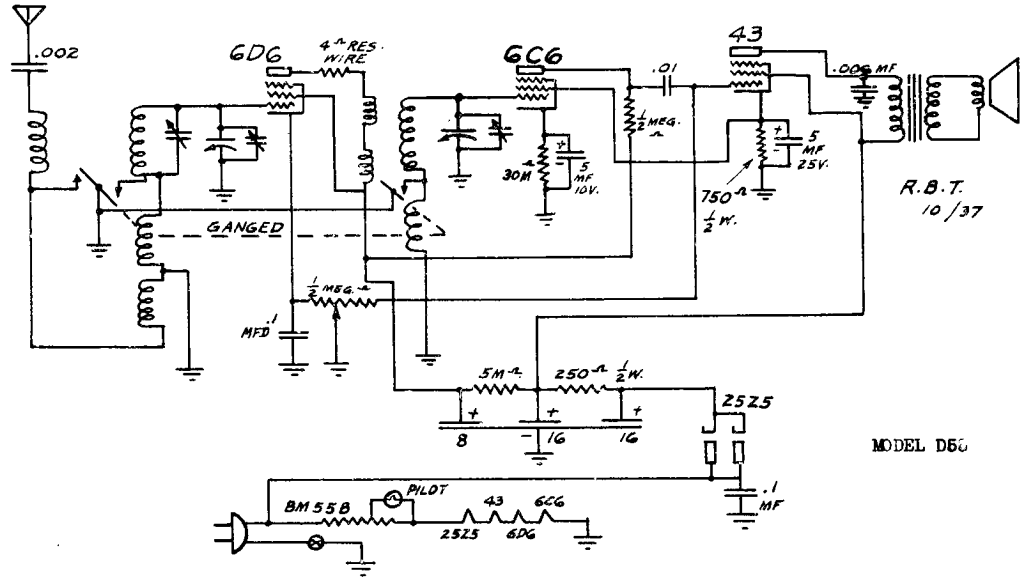

MODEL D55

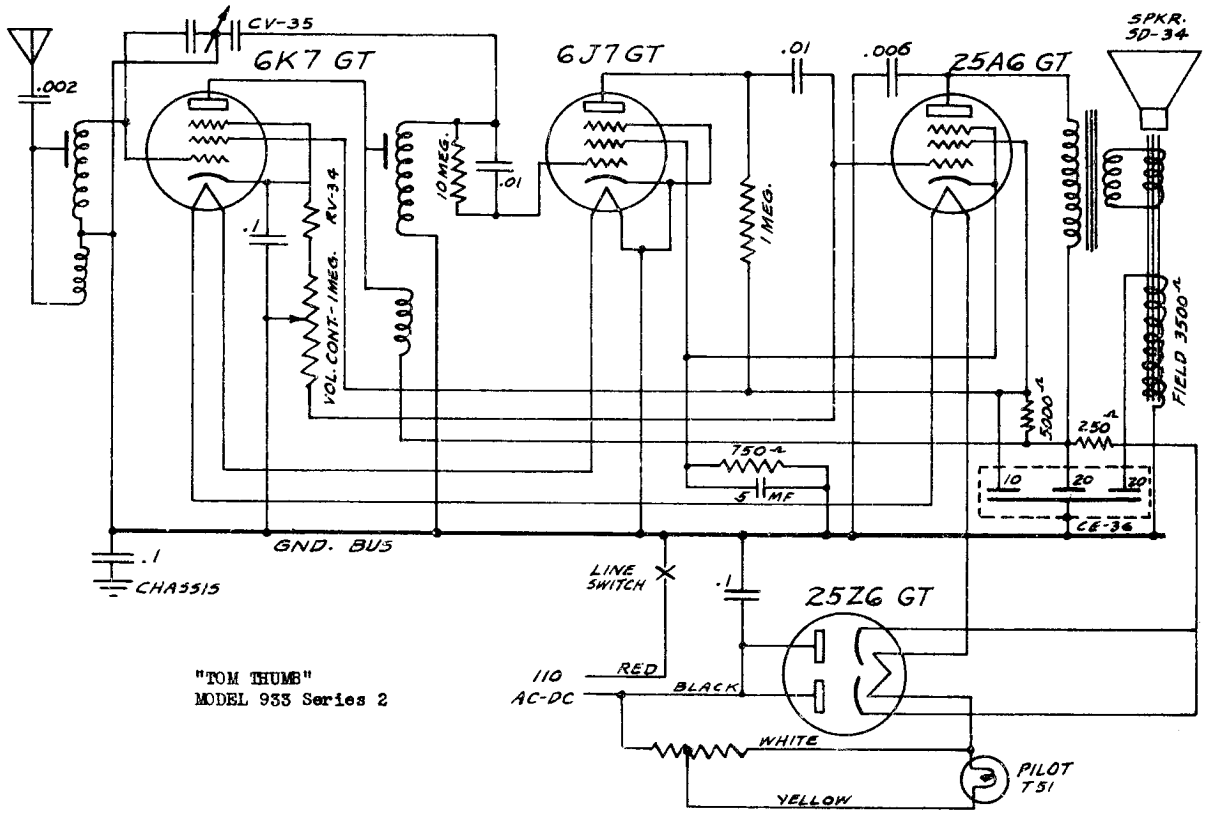

"TOM THUMB"
MODEL 933 Series 2

©John F. Rider, Publisher

MODELS 845,960,963
MODELS 933,935
MODELS 950,955
Schematics,Layouts

AUTOMATIC RADIO MFG. CO., INC.

TUBE LOCATION CHART — MODELS 933-935

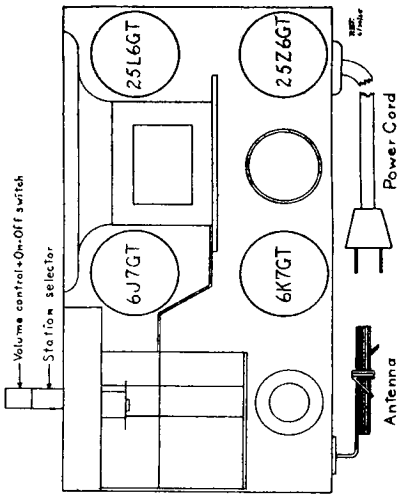

SCHEMATIC DIAGRAM — MODELS 933-935

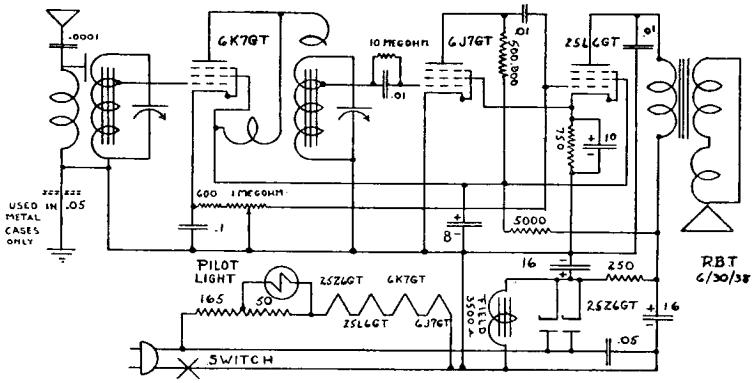

105-125 volts AC or DC

TUBE LOCATION CHART — MODELS 950-955

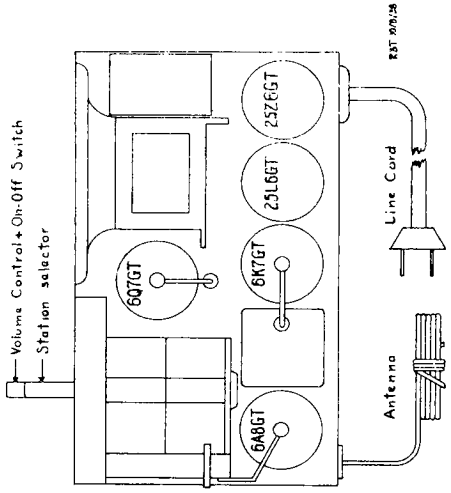

SCHEMATIC DIAGRAM — MODELS 950-955

IF PEAK 456 KC

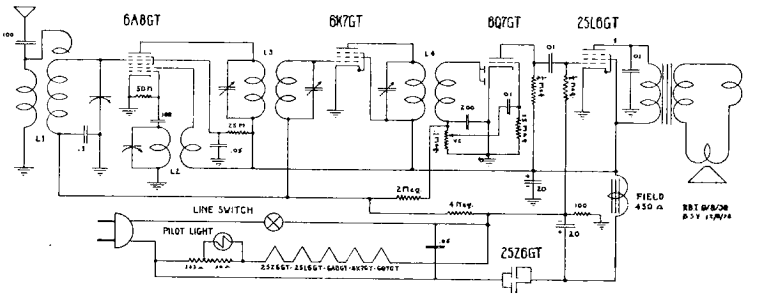

105-125 volts DC or AC

TUBE LOCATION CHART—MODELS 960-963-845

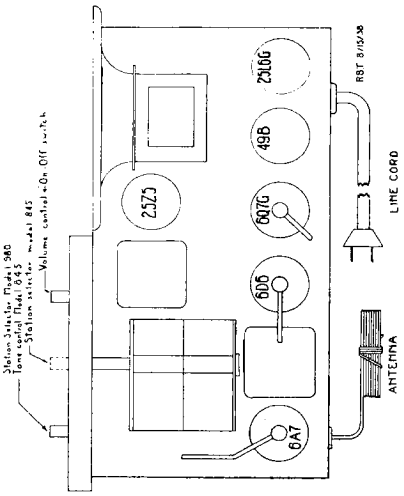

SCHEMATIC DIAGRAM—MODELS 960-963-845

IF PEAK 456 KC

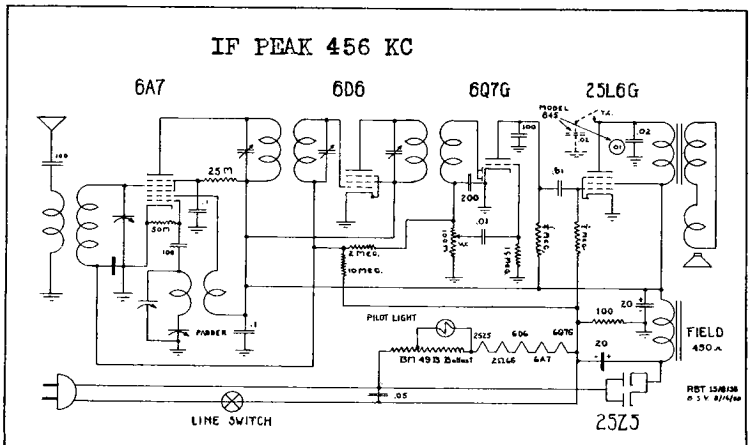

105-125 volts AC or DC

©John F. Rider, Publisher

AUTOMATIC RADIO MFG. CO., INC.

MODEL 855
Schematic, Alignment
Tuner

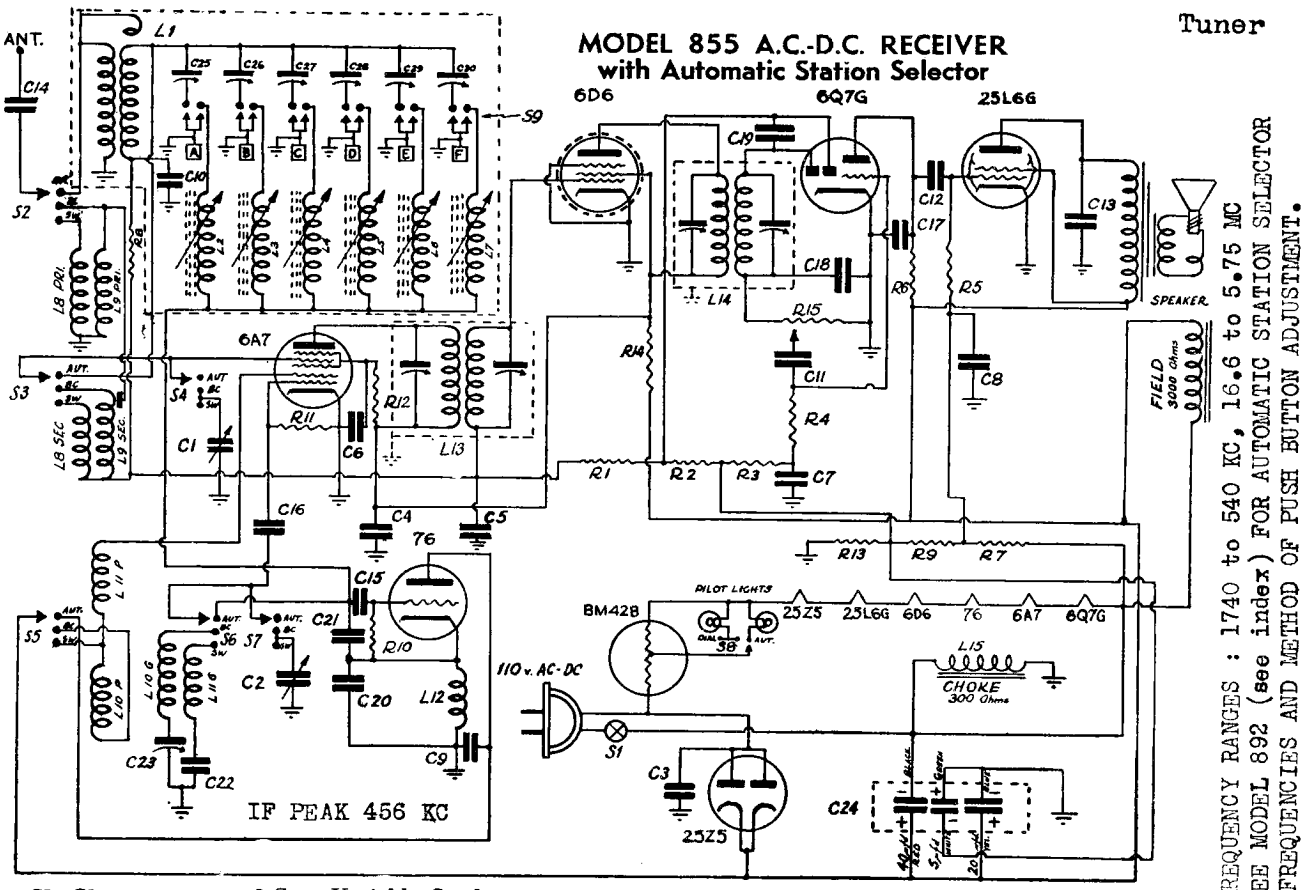

C1, C2	2 Sect. Variable Condenser			R1, R2	Resistors	2 megohms—¼ Watt
C3, C4, C5, C6, C7 C8, C9, C10	Fixed Condensers	.1mfd—200v		R3, R4	”	1 megohm—¼ Watt
C11, C12, C13	Fixed	”	.01mfd—400v	R5	”	½ megohm—¼ Watt
C14	Fixed	”	.002mfd—600v	R6	”	¼ megohm—¼ Watt
C20, C21	Fixed	”	.001mfd	R7	”	150,000 ohms—¼ Watt
C15, C16, C17, C18	Mica	”	200mmfd	R8	”	100,000 ohms—¼ Watt
C19	Mica	”	100mmfd	R9	”	75,000 ohms—¼ Watt
C22	Fixed Padder		4500mmfd—200v	R10, R11	”	50,000 ohms—¼ Watt
C23	Variable Padder		550mmfd	R12	”	25,000 ohms—¼ Watt
C24	Electrolytic Condenser			R13	”	12,500 ohms—¼ Watt
C25, C26, C27, C28, C29, C30	Dual Trimmer Condensers			R14	”	30 ohms—¼ Watt
				R15	Volume Control	¼ megohm

ALIGNMENT PROCEDURE

The following instructions are for the sole use of professional radio service men in the event that the receiver should require serviceing.

I. F. Alignment. The intermediate frequency to which this set should be adjusted is 456 K.C. To align the intermediate frequency transformers properly, a signal generator emitting a signal of 456 K.C. should be coupled to the signal control grid of the 6A7 tube through a .5 mmfd condenser. An output meter should be connected across the voice coil of the speaker. The four trimmers mounted internally in the top of the two I. F. cans should be adjusted to resonance. The output of the signal generator should be attentuated so as to provide the weakest possible signal necessary to produce a .5 volt deflection on the output meter.

R. F. Alignment. Adjust the signal generator to 17.4 MC. Feed this signal into the antenna lead of the receiver through a 400 ohm resistor. Rotate the band switch on the receiver to the Short Wave position and set the tuning dial to 17.4 on the Short Wave Scale. Adjust the trimmer on the rear section for maximum signal output. Rotate the Band Switch to the broadcast position. Replace the 400 ohm resistor in the Oscillator lead with a 200 mmfd condenser. Set the signal generator to 1560 K.C. and tune the receiver to the same frequency. Adjust the small trimmer condenser which is located near the Oscillator coil underneath the Chassis, to maximum signal response. Attentuate the output of the signal generator to the extent necessary for maintaining a deflection of .5 volts on the output meter and adjust the trimmer mounted on the front section of the variable condenser to resonance. Set the signal generator and the receiver at 600 K.C. and adjust the padder condenser for optimum response. Repeat the last two adjustments to insure accuracy of alignment. Rotate the Band Switch to the Short Wave position and with the signal generator and receiver tuned to 15 MC, adjust the small trimmer condenser which is located near the Short Wave Antenna coil. This last operation should be made with the 400 ohm resistor in the antenna circuit.

It is imperative that all adjustments be made with the minimum signal necessary to obtain the designated deflection on the output meter. This will obviate any difficulty arising from the A.V.C. action of the receiver, and will permit adjustment to absolute resonance.

©John F. Rider, Publisher

MODEL 878
Schematic, Trimmers Alignment

AUTOMATIC RADIO MFG. CO., INC.

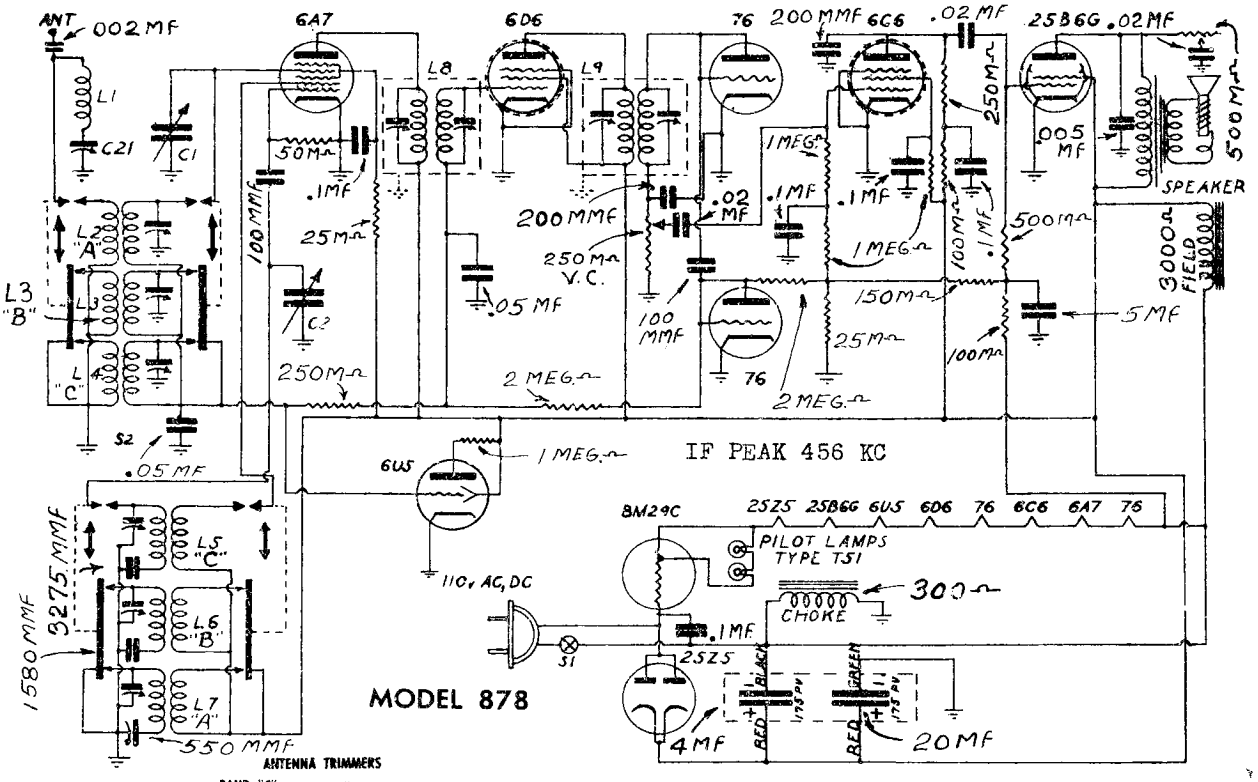

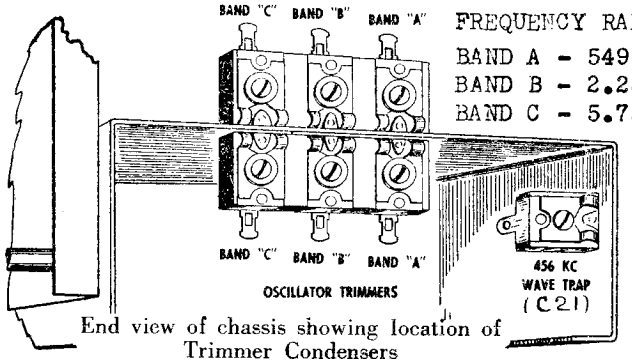

End view of chassis showing location of Trimmer Condensers

FREQUENCY RANGES :

BAND A - 549 to 1555 KC
BAND B - 2.23 to 6.36 MC
BAND C - 5.75 to 16.6 MC

I.F. ALIGNMENT

Couple the signal generator to the signal control grid of the 6A7 tube through .5 mfd. condenser. Signal from the generator adjusted to .5 volt output meter deflection. Adjust the four I.F. trimmers on transformers to resonance.

WAVETRAP - The trimmer condenser C21 is next adjusted at 456 KC. Signal should be fed to the antenna terminal of receiver. Adjust for minimum response.

R. F. Alignment. Rotate the band switch to the extreme counter-clockwise or "A" band position. Set the receiver dial at 1400 KC. Advance the volume control to maximum. Adjust the signal generator to 1400 KC and feed this signal to the receiver by connecting a 200 mmfd fixed condenser between the signal generator lead and the receiver antenna lead. With a weak signal adjust the band "A" oscillator trimmer to resonance. Then adjust band "A" antenna trimmer for maximum response. Rotate both the receiver dial and signal generator dial to 600 KC. Adjust the padder condenser to resonance. This adjustment is located on the top of the chassis pan between the composite broadcast and short wave antenna coil and the variable condenser. It will be necessary to repeat both the high frequency trimming and low frequency padding adjustments to insure correct alignment. In making final adjustments it is desirable that the signal generator output be attentuated sufficiently so that the output meter connected across the speaker voice coil does not greatly exceed .5 volt deflection at maximum response.

Rotate the band switch clockwise to the intermediate or "B" band position. Replace the 200 mmfd condenser in the signal generator output lead with a 400 ohm resistor. Set the receiver and the signal generator to 5.5 megacycles. Adjust the "B" band oscillator trimmer and then the "B" band antenna trimmer to resonance, at all times keeping the signal output from the generator as low as practical.

Rotate the band switch to the extreme clockwise or "C" band position. Set the receiver and signal generator to 15 megacycles as indicated on their respective dials. Adjust the "C" band oscillator trimmer and then the "C" band antenna trimmer to resonance. It is of particular importance in making these adjustments that the receiver should not be tuned to the image instead of the desired signal. This difficulty can largely be avoided by extreme attentuation of the signal generator output.

The normal alignment of this receiver requires that its oscillator operate at a frequency 456 KC higher than that of the tuner. The simplest way of distinguishing the correct operating point on the oscillator trimmer from the image response point is to start with the trimmer screw set down fairly tight, then to slowly turn the screw out. First one response and then a second will be heard. The second response is the correct one. If only one response is heard over the whole trimmer range, it will be the correct one.

©John F. Rider, Publisher

AUTOMATIC RADIO MFG. CO., INC.

MODEL 892
Schematic
Trimmers

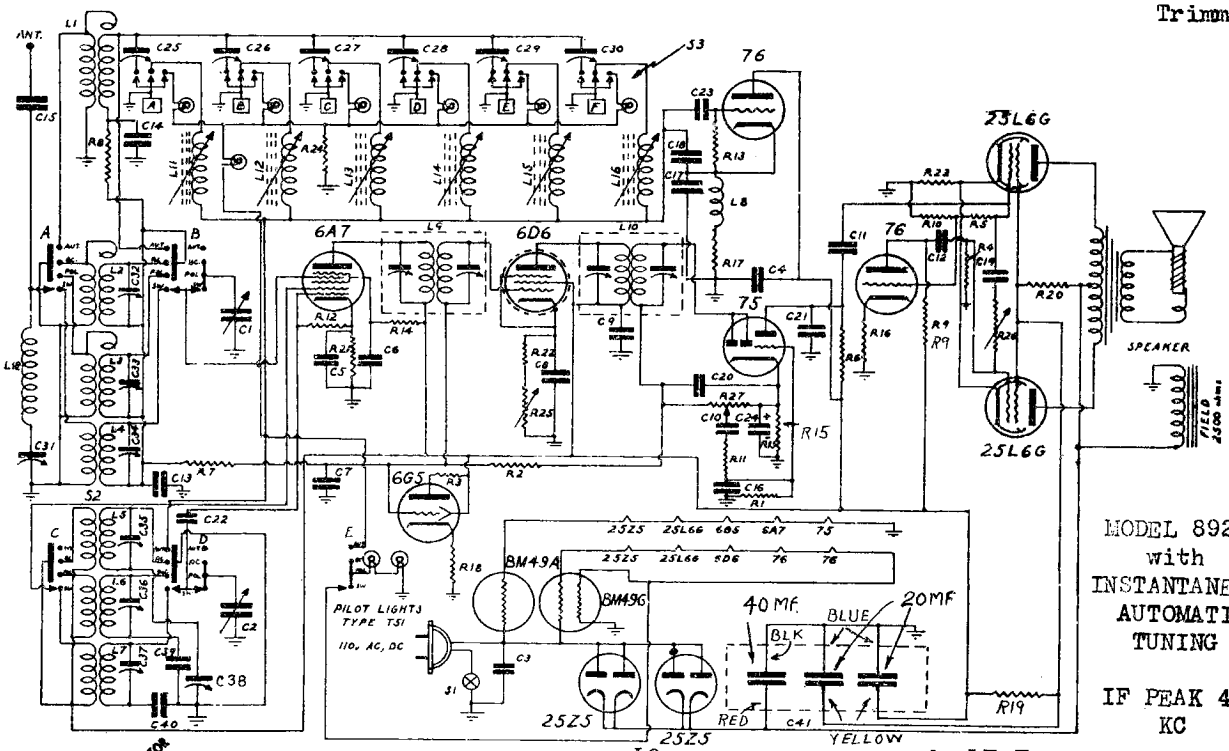

MODEL 892
with
INSTANTANEOUS
AUTOMATIC
TUNING

IF PEAK 456
KC

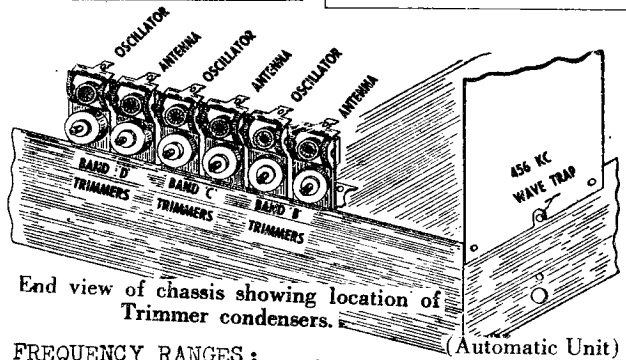

End view of chassis showing location of Trimmer condensers. (Automatic Unit)

FREQUENCY RANGES:
BAND A -540 KC to (AUTO.) 1520 KC.
BAND B -547 KC to (Standard) 1560 KC
BAND C -2.19 MC to 6.5 MC.
BAND D -5.8 MC to 15.6 MC.

L1	Broadcast Antenna Coil
L2	Broadcast Antenna Coil
L3	Police Band Antenna
L4	Short Wave Antenna
L5	Broadcast Oscillator Coil
L6	Police Oscillator Coil
L7	Short Wave Oscillator Coil
L8	R.F. Choke
L9	1st I.F. Transformer
L10	2nd I.F. Transformer
L11, 12, 13, 14, 15, 16	Automatic Selector Oscillator Coil Assembly
L18	Wave Trap
	Speaker
S1	Line Switch (On Vol. Control)
S2	Band Selector Switch
S3	Automatic Selector Switch Assembly
C1, C2	2 Section Variable Condenser
C3, 4, 5, 6, 7, 8, 9	Fixed Condensers .1mfd—200v
C10, 11, 12	Fixed " .01mfd—400v
C13, C14	Fixed " .05mfd—200v
C15	Fixed " .002mfd—600v
C16	Mica " 100mmfd
C17, C18	Toothpick " 1000mmfd
C19	Fixed " 1000mmfd
C20, 21, 22, 23	Mica " 200mmfd
C24	Electrolytic Condenser 5mfd—35v
C25, C26	Dual Trimmer
C27, C28	" "
C29, C30	" "
C31	Single Trimmer (3–30mmfd)
C32, 33, 34, 35, 36, 37	Six Section Trimmer
C38	Variable Padder 550mmfd
C39	Fixed " 1175mmfd
C40	Fixed " 3350mmfd
C41	Electrolytic Condenser
R1, R2	Resistors 2 megohms—¼ Watt
R3	" 1 megohm—1/10 Watt
R4, R5, R6	" ½ megohm—¼ Watt
R7	" ¼ megohm—¼ Watt
R8, R9, R10	" 100,000 ohms—¼ Watt
R11, R12, R13	" 50,000 ohms—¼ Watt
R14	" 25,000 ohms—¼ Watt
R15	" 15,000 ohms—¼ Watt
R16	" 5,000 ohms—¼ Watt
R17, R18, R19	" 1,000 ohms—¼ Watt
R20, R21	" 250 ohms—¼ Watt
R23	" 75 ohms—1 Watt
R24	" 60 ohms—1 Watt
R22, R25	Sensitivity Control 6000 ohms
R26	Tone Control 500,000 ohms
R27	Volume Control 250,000 ohms

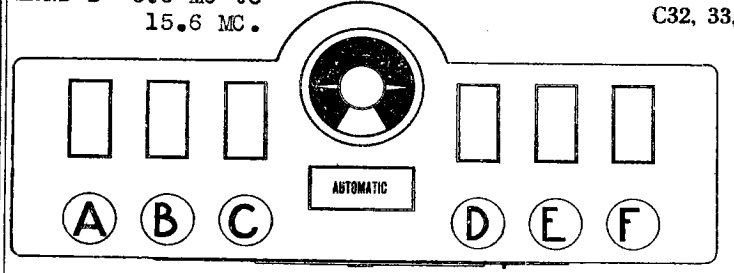

SELECTOR BUTTONS AND THEIR RESPECTIVE FREQUENCY RANGES FOR INSTANTANEOUS AUTOMATIC TUNING SYSTEM

POSITION	FREQUENCY RANGE
A	770 KC to 540 KC
B	970 KC to 580 KC
C	1220 KC to 670 KC
D	1250 KC to 740 KC
E	1520 KC to 830 KC
F	1520 KC to 830 KC

©John F. Rider, Publisher

MODEL 892
Alignment
Tuner

AUTOMATIC RADIO MFG. CO., INC.

ALIGNMENT PROCEDURE AND INSTRUCTIONS FOR ADJUSTING THE AUTOMATIC SELECTOR UNIT

1. Select six local stations which ordinarily comprise the principal source of entertainment. These must be stations which can be depended upon to provide good reception at all times.

2. Arrange these stations in the order of their frequency (KC) assignments. The frequency assignment for any station may be found in any newspaper listing or a radio call book. For purposes of convenience in adjustment, each button has been assigned a letter from "A" to "F" as indicated in the following table.
It will be noted that each button operates only over a definite frequency range. For this reason, it is necessary that the station with the lowest frequency (nearest to the 550 KC end of the broadcast band) should be assigned to button "A". Button "B" would be used for the station of the next lowest frequency. This procedure is followed throughout. Button "F" is used for the station of highest frequency (nearest the 1500 KC end of band).

3 Mounted on the rear of the Automatic unit below the 12 adjustment screws is a strip showing the purpose of each adjustment screw. This strip shows that there are two adjustments for each station button; one is the oscillator adjustment, and the other the antenna adjustment.These are noted on the strip as "A" osc., "A" ant., "B" osc., "B" ant. etc.

4. Switch the set on by rotating the volume control knob to the right. Rotate the band switch to the broadcast position as indicated on the card mounted behind the knobs on the front panel. Carefully tune in the station which has been selected for position "A". Note the program received from that station. This will provide a simple method of identifying the station while adjusting the selector unit.

5. Rotate the band switch to the Automatic position. Press the extreme left-hand button on the front panel inward until it is engaged by the latch. This controls station position "A".

6. With a small screw driver adjust the setting marked "A" osc. until the desired program is heard. It is often possible to receive the same program at several points of adjustment. The correct point will provide the loudest response. Carefully adjust the screw which is marked "A" ant. for complete resonance. On powerful local stations it may be necessary to disconnect the antenna to find the correct antenna screw adjustment.

7. Rotate the band switch to the broadcast position again, then tune in the station which has been selected for position "B". Observe the nature of its program and rotate the band switch to the Automatic position. Depress the control button "B". Adjust the screw marked "B" osc. and then the screw marked "B" ant. in the same manner as was previously done for position "A".

8. Following the same procedure, adjust the remaining four station positions.

9. Repeat the six station adjustments in the same order as originally made.

10. Remove the Escutcheon plate from the front of the control unit. Detach the call letters of the six stations selected from the call letter sheet furnished with the receiver. Moisten the gummed backed of each of the six call tabs and affix them within the marked section of the celluloid plates which are mounted behind the Escutcheon. Each call tab should be positioned in the space directly above the shaft controlling the station which it identifies.

I. F. Alignment. The intermediate frequency to which this set should be adjusted is 456 KC. To align the intermediate frequency transformers properly, a signal generator emitting a signal of 456 KC should be coupled to the signal control grid of the 6A7 tube through a .5 mfd condenser. An output meter should be connected across the voice coil of the speaker. The four trimmers mounted internally in the top of the two I. F. cans should be adjusted to resonance. The output of the signal generator should be attentuated so as to provide the weakest signal necessary to produce a .5 volt deflection on the output meter when resonance is achieved.

R. F. Alignment. Rotate the band switch to position "B". This is the position which is second from the extreme counter-clockwise (Automatic) position. Set the receiver dial at 1400 KC. Advance the volume control to maximum. Adjust the signal generator to 1400 KC and feed this signal to the receiver by connecting a 200 mmfd fixed condenser between the signal generator lead and the receiver antenna lead. With a weak signal adjust the band "B" oscillator trimmer to resonance. Then adjust band "B" antenna trimmer for maximum response. Rotate both the receiver dial and signal generator dial to 600 KC. Adjust the padder condenser to resonance. This adjustment is located on the top of the chassis pan mid-way between the "B" band oscillator coil and the first I. F. Transformer. It will be necessary to repeat both the high frequency trimming and low frequency padding adjustments to insure correct alignment. In making final adjustments it is desirable that the signal generator output be attentuated sufficiently so that the output meter connected across the speaker voice coil does not greatly exceed .5 volt deflection at maximum response.

Rotate the band switch clockwise to the third or "C" band position. Replace the 200 mmfd condenser in the signal generator output lead with a 400 ohm resistor. Set the receiver and the signal generator to 5.5. megacycles. Adjust the "C" band oscillator and then the "C" band antenna trimmer to resonance, at all times keeping the signal output from the generator as low as practical.

Rotate the band switch to the extreme clockwise or "D" band position. Set the receiver and signal generator to 14 megacycles as indicated on their respective dials. Adjust the "D" band oscillator trimmer and then the "D" band antenna trimmer to resonance. It is of particular importance in making these adjustments that the receiver should not be tuned to the image instead of the desired signal. This difficulty can largely be avoided by extreme attentuation of the signal generator output.

The normal alignment of this receiver requires that its oscillator operate at a frequency 456 KC higher than that of the tuner. The simplest way of distinguishing the correct operating point on the oscillator trimmer from the image response point is to start with the trimmer screw set down fairly tight, then to slowly turn the screw out. First one response and then a second will be heard. The second response is the correct one. If only one response is heard over the whole trimmer range, it will be the correct one.

456 KC Trap Alignment. In regions adjacent to commercial radio telegraph transmitters code interference is often experienced because of the seepage of these code signals through the intermediate frequency system. A wave trap is incorporated in this receiver to eliminate this condition. To adjust this trap circuit a 456 KC signal should be fed from the signal generator into the antenna circuit of the receiver. This signal should be of a fairly high order. Adjust the wave trap trimmer condenser until minimum response is obtained.

©John F. Rider, Publisher

BELMONT RADIO CORP.

MODEL 408, Series A
Schematic, Voltage
Socket, Trimmers
Alignment, Parts

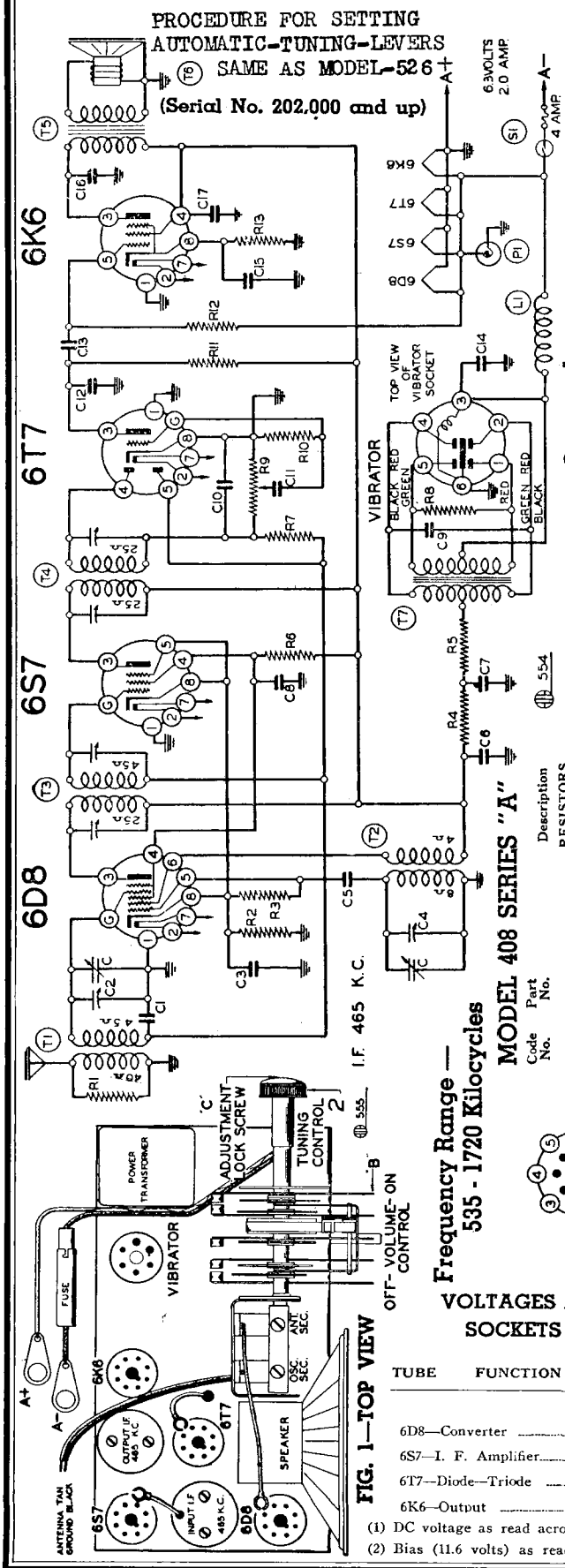

FIG. 1—TOP VIEW

ALIGNING I.F. TRANSFORMERS

Part No. 10895D Output I. F. Transformer

Part No. 10896E Input I. F. Transformer

These I.F. transformers have two adjustments, both of which are accessible from the top of chassis (see Fig. 1).

1. With volume control full on (the extreme right of its rotation), and with the variable condenser set to approximately 1400 kilocycles, make the following adjustments:
   (a) Connect external oscillator set at 465 kilocycles, in series with .1 mfd. condenser, to the control grid cap of the type 6S7G tube, and adjust the output I.F. transformer (No. 10895D) to resonance.
   (b) Move oscillator output clip from grid of 6S7G to grid of 6D8G and adjust input I.F. transformer (No. 10896E) to resonance.
   (c) With oscillator still connected to 6D8G, readjust output I.F. transformer (10895D) if necessary.

R.F. ALIGNMENT: (535-1720 K. C.)

1. With gang condenser in its minimum capacity position, plates entirely out of mesh, connect an external oscillator in series with a 100 mmf. condenser to the antenna lead and chassis ground and make the following adjustments:
   (a) with external oscillator set at 1720 kilocycles, adjust oscillator trimmer to resonance. This adjustment is on the top of rear section of variable gang condenser. (See Fig. 1).
   (b) Re-set external oscillator to 1400 kilocycles, rotate condenser, pick up oscillator signal and adjust antenna trimmer to resonance. (Top of front section of gang condenser.
   (c) Check sensitivity at 600 and 1000 kilocycles.

Code No.	Part No.	Description
		RESISTORS
R1	13021	20M ohm—½ w.
R2	13081	250 ohm—½ w.
R3	13012	50M ohm—½ w.
R4	13084	200 ohm—½ w.
R5	13084	200 ohm—½ w.
R6	130149	15M ohm—½ w.
R7	130170	3 megohm—½ w.
R8	13084	200 ohm—½ w.
R9	101107	500M ohm Volume control
R10	130225	15 megohm—½ w.
R11	1309	200M ohm—½ w.
R12	1303	500M ohm—½ w.
R13	13024	400 ohm—½ w.
		CONDENSERS
C	1026?B	2 gang variable condenser
C1	1009	.05 x 200 v.
C2		Antenna Trimmer on gang
C3	10022	.05 x 200 v.
C4		Oscillator trimmer—on gang
C5	12912	.00025—mica
C6	11957	15 mfd.—150 w. v.
C7	11958	30 mfd.—150 w. v.
C8	10022	.05 x 200 v.
C9	10068	.003 x 1400
C10	12912	.00025—Mica
C11	10011	.01 x 400 v.
C12	1292	.0005—Mica
C13	10011	.01 x 400 v.
C14	10031	.5 x 120 w. v.
C15	11957	15 mfd.—25 w. v.
C16	10019	.006 x 600 v.
C17	11020	.1 x 200 v.
		C6 and C 15 in same unit

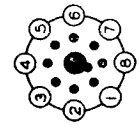

PARTS

T1	11192	Antenna Coil Complete
T2	11073	Oscillator Coil Complete
T3	10896E	Input I. F.—465 kc. Complete
T4	10895D	Output I. F.—465 kc. Complete
T5	10570	Output Transformer
T6	114118	5" P. M. Speaker
T7	104137	Power Transformer
L1	10568	"A" Choke—
P1	10789	Pilot light—Type 40—6.3 v.—.15 amp.
S1		Off-on switch on volume control
	1268	Vibrator

VOLTAGES AT SOCKETS

Voltage taken from different points of circuit to chassis are measured with volume control full on, all tubes in their sockets and speaker connected, with a volt meter having a resistance of 1000 ohms per volt. Antenna Shorted to Ground

TUBE	FUNCTION	Prong No. 1	Prong No. 2	Prong No. 3	Prong No. 4	Prong No. 5	Prong No. 6	Prong No. 7	Prong No. 8
			(1)					(1)	
6D8	Converter	0	6.25	137	80		137	6.25	3.0
6S7	I. F. Amplifier	0	6.25	137	80	3.0		6.25	3.0
6T7	Diode—Triode	0	6.25	57				6.25	0
6K6	Output	0	6.25	130	137			6.25	5.4 (2)

(1) DC voltage as read across heater terminals 2 and 7.
(2) Bias (11.6 volts) as read across terminals 8 to 7.

Supply Voltage 6.3 DC—Volume Control: Maximum
Readings taken with 1000 ohm-per-volt meter

©John F. Rider, Publisher

© John F. Rider, Publisher

The approximate current consumption is as follows: "A"—360 ma., "B"—15 ma.

ALIGNING I.F. TRANSFORMERS: (465 K.C.):

Part No. 108112. Output I.F. Transformer.

Part No. 108111. Input I.F. Transformer.

These I.F. transformers have two adjustments, both of which are accessible from the top of chassis (see Fig. 1).

1. With volume control full on (the extreme right of its rotation), and with the variable condenser set to approximately 1400 kilocycles, make the following adjustments:
   (a) Connect external oscillator set at 465 kilocycles, in series with .1 mfd condensor, to the control grid cap of the type 1D5G I.F. tube, and adjust the output I.F. transformer (No. 108112) to resonance.
   (b) Move oscillator output clip from grid of 1D5G to grid of 1D7G and adjust input I.F. transformer (No. 108111) to resonance.
   (c) With oscillator still connected to 1D7G. readjust output I.F. transformer (108112) if necessary.

R. F. ALIGNMENT: (535-1720 K.C.)

1. With the gang condenser in its minimum capacity position, plates entirely out of mesh, connect an external oscillator in series with a 100 mmf. condensor to the antenna lead and chassis ground and make the following adjustments:
   (a) With external oscillator set at 1720 kilocycles, adjust oscillator trimmer to resonance. This adjustment is on the top of rear section of variable gang condenser. (See Fig 1).
   (b) Re-set external oscillator to 1400 kilocycles, rotate condenser, pick up oscillator signal and adjust antenna trimmer to resonance. (Top of front section of gang condenser).
   (c) Check sensitivity at 600 and 1000 kilocycles.

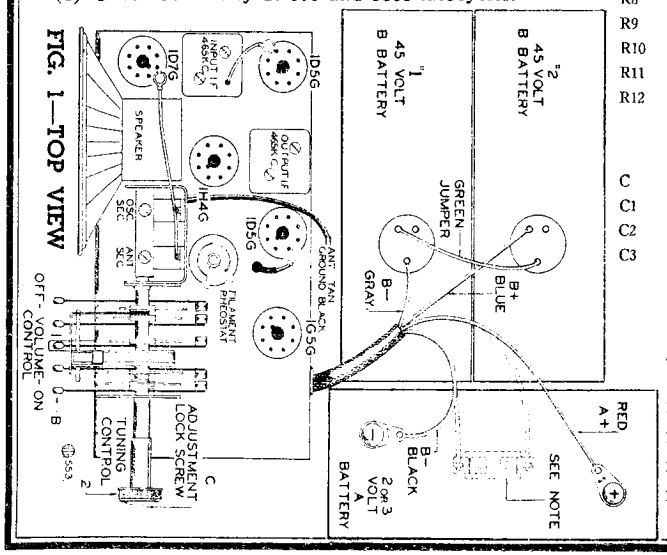

FIG. 1—TOP VIEW

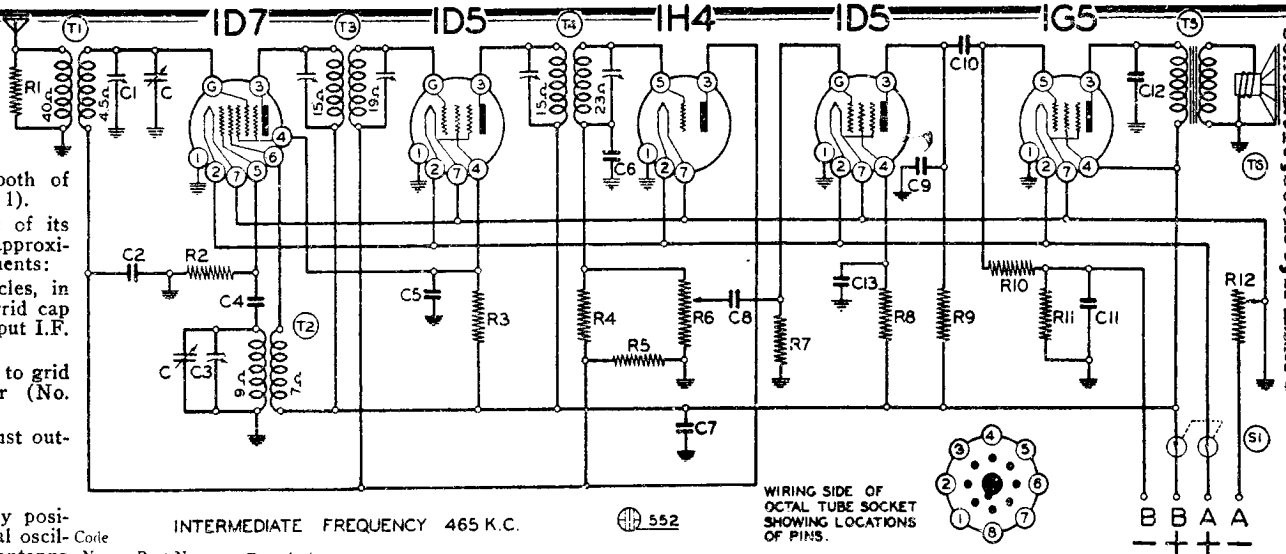

INTERMEDIATE FREQUENCY 465 K.C.

552

WIRING SIDE OF OCTAL TUBE SOCKET SHOWING LOCATIONS OF PINS.

MODEL 501 Series A

(Serial No. 197000 and up)

Code No.	Part No.	Description
		RESISTORS
R1	13021	20M ohm—1/3 w.
R2	13012	50M ohm—1/3 w.
R3	13017	10M ohm—1/3 w.
R4	13038	2 megohm—1/3 w.
R5	13038	2 megohm—1/3 w.
R6	101116	1 megohm volume control
R7	13019	1 megohm—1/3 w.
R8	13019	1 megohm—1/3 w.
R9	1309	200M ohm—1/3 w.
R10	13019	1 megohm—1/3 w.
R11	13093	450 ohm—1/3 w.
R12	101117	Battery Rheostat 4.75 ohms
		CONDENSERS
C	10267	2 gang variable condenser
C1		Antenna section trimmer
C2	10022	.05 x 200 v.
C3		Oscillator section trimmers
C4	12912	.00025 Mica.
C5	1009	.05 x 200 v
C6	1295	.0001 Mica—20%.
C7	10048	.25 x 200 v
C8	10011	.01 x 400 v.
C9	1292	.0005 Mica—20%.
C10	10011	.01 x 400 v.
C11	11952	25 mfd.—25 w. v. lytic.
C12	10071	.004 x 600 v.
C13	1009	.05 x 200 v.

Voltages taken from different points of circuit to chassis are measured with volume control full on, all tubes in their sockets and speaker connected, with a volt meter having a resistance of 1000 ohms per volt.

All voltages as indicated on diagram are measured with a new set of batteries.

PROCEDURE FOR SETTING AUTOMATIC-TUNING-LEVERS SAME AS MODEL-526

		PARTS
T1	11192	Antenna coil complete
T2	11085	Oscillator coil complete
T3	108111	Input I. F. Complete
T4	108112	Output I. F. Complete
T5	10557	Output Transformer
T6	114118	5" P. M. Speaker
S1		Double Pole—Double throw switch on volume control

Antenna Shorted to Ground
Volume Control: Maximum
Readings taken with 1000 ohm-per-volt meter

VOLTAGES AT SOCKETS

Voltage Between Socket Prong and Ground

TUBE	FUNCTION	Prong No. 1	Prong No. 2	Prong No. 3	Prong No. 4	Prong No. 5	Prong No. 6	Prong No. 7	Prong No. 8
1D7G	Converter	0	+2	+83.5	+60	—15	+83.5	0	0
1D5G	I. F. Amplifier	0	+2	+83.5	+60	0	0	0	+83.5
1H4G	2nd Detector, AVC	0	+2	0	0	0	0	0	0
1D5G	1st Audio	0	+2	+30	+11	0	0	0	+83.5
1G5G	Output	0	+2	+80	+83.5	—2.5	0	0	— 6.5

Schematic, Socket
Trimmers, Parts, Voltage

BELMONT RADIO CORP.

MODEL 489 Series A
Serial 7J852300 up
Issue B, Ser. 8C16800 up

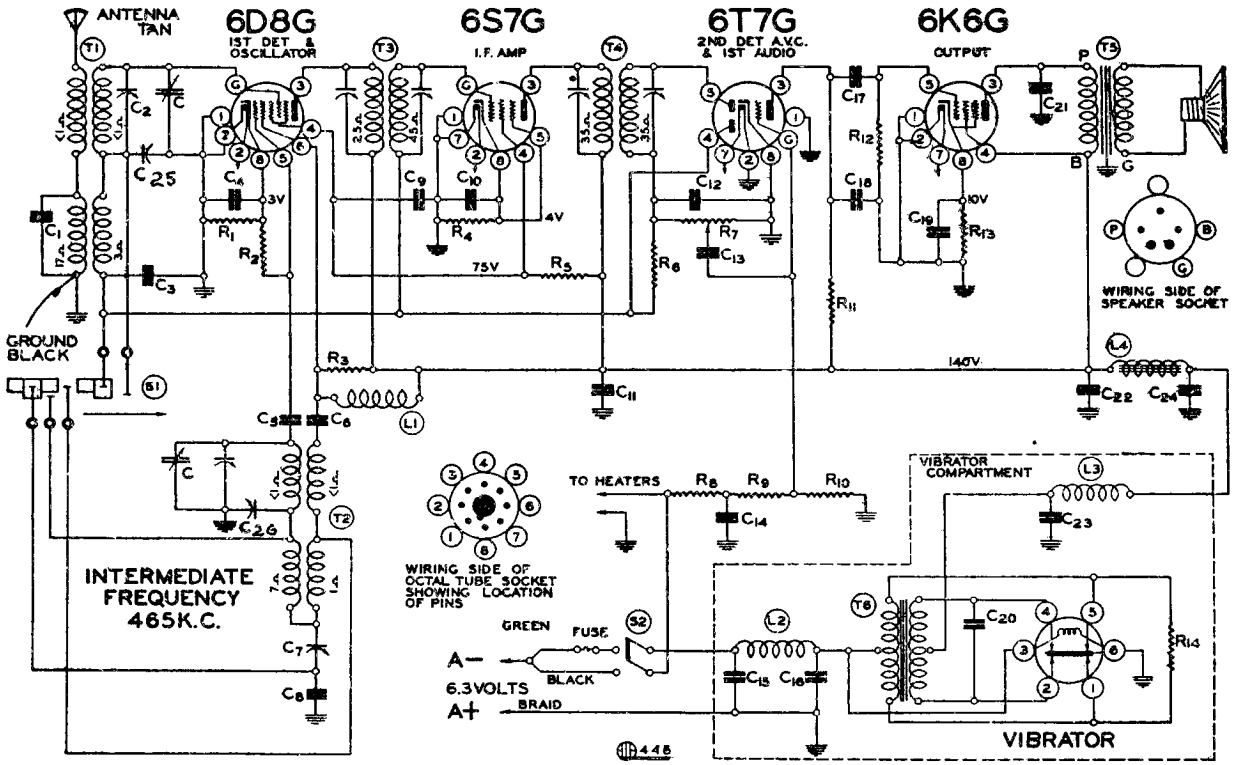

RESISTORS

R1	130-54	500 ohm - 1/3 w.
R2	130-12	50M ohm - 1/3 w.
R3	130-12	50M ohm - 1/3 w.
R4	130-26	1000 ohm - 1/3 w.
R5	130-149	15M ohm - 1/3 w.
R6	130-4	3 megohm - 1/3 w.
R7	101-91	1 meg volume control
R8	130-191	1.5 megohm - 1/3 w.
R9	130-4	3 megohm - 1/3 w.
R11	130-9	200M ohm - 1/3 w.
R12	130-3	500M ohm - 1/3 w.
R13	130-153	700 ohm - 1/3 w.
R14	130-84	200 ohm - 1/3 w.
R10	130-191	1.5 meg - 1/3 w.

CONDENSERS

C	102-43	2 gang variable
C1	129-5	.0001 Mica
C2	124-39B	Adj. Cond. 2-25 mmf.
C3	100-22	.05 x 200
C4	100-20	.1 x 200
C5	129-39	.00005 Mica
C6	100-25	.002 x 600
C7	124-38	Series pad 600 mmf. W. C.
C8	129-54	.003 Mica
C9	100-20	.1 x 200
C10	100-20	.1 x 200
C11	100-11	.01 x 400
C12	129-5	.0001 Mica
C13	100-11	.01 x 400
C14	100-11	.01 x 400
C15	100-40	.5 x 200
C16	100-40	.5 x 200
C17	100-26	.02 x 400
C18	129-2	.0005 Mica
C19	119-22	10.0 mfd. 25 v. lytic
C20	100-34	.005 x 1200
C21	100-19	.006 x 600
C22	119-28B	5.0 mfd. lytic
C23	100-20	.1 x 200
C24	119-28B	5.0 mfd. lytic

C22 - C24 in same unit

C25	124-30B	Adjustable Trimmer, 2-20 mmf.
C26	124-30B	Adjustable Trimmer, 2-20 mmf.

C25 and C26 in same unit

MODEL 489, SERIES A

(Serial No. 7J852300 and up)

ISSUE B (Serial No. 8C136800 and up)

PARTS

T1	111-83	Antenna coil complete
T2	110-66B	Oscillator coil complete
T3	108-105B	Input I.F. complete 465 kc.
T4	108-106B	Output I.F. complete 465 kc.
T5	114-96	6" speaker (P.M.)
T6	104-62E	Power Transformer
L1	123-4	R. F. "B" Choke
L2	105-19	A Choke
L3	123-3	R. F. "B" Choke
L4	105-30E	"B" Filter Choke (400 ohms)
S1	125-39	Wave Band Switch
S2		Switch on volume control

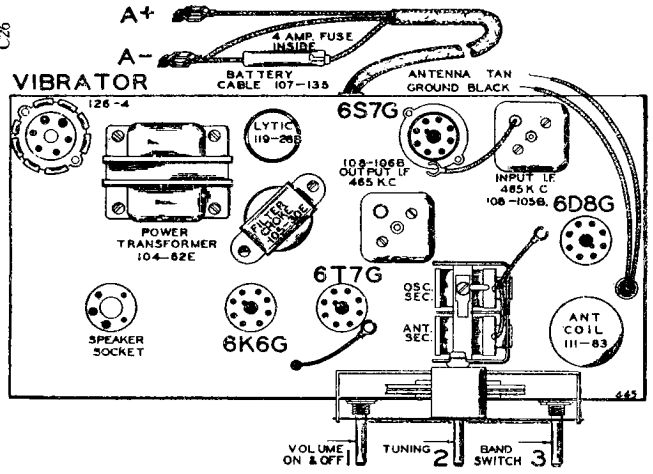

FIG. 1—TOP VIEW

FREQUENCY RANGE

DIAL SCALE

BAND	Upper	Lower
Broadcast	535 to 1720 K.C. (Kilocycles)	
Short Wave	5.5 to 18.1 M.C. (Megacycles)	

©John F. Rider, Publisher

MODEL 489 Series A
Serial 7J852300 up
Issue B,Ser.8C136800 up
Trimmers,Alignment
MODEL 505 Series A
Trimmers,Alignment

BELMONT RADIO CORP.

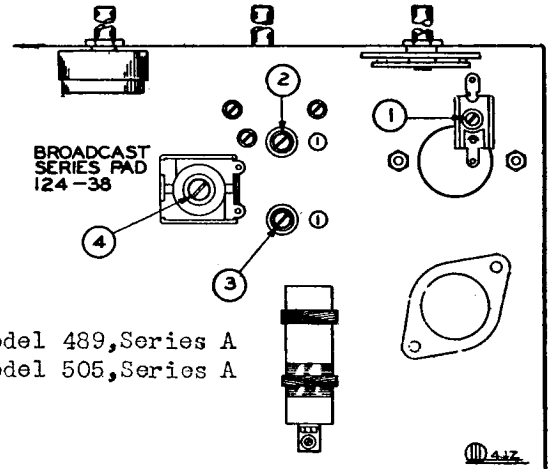

Model 489,Series A
Model 505,Series A

FIG 3.—BOTTOM VIEW

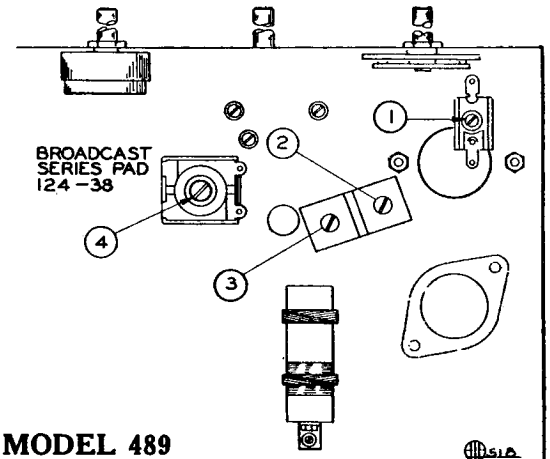

MODEL 489
SERIES A ISSUE B

FIG 3.—BOTTOM VIEW

(Serial No. 8C136800 and up)

DUMMY ANTENNAS:

The following dummy antennas are used in aligning and are referred to in the following alignment instructions as "Dummy 1", "Dummy 2", and "Dummy 3".

Dummy 1: (I.F.)—Consists of a .1 mfd. condenser connected in series with the external oscillator.

Dummy 2: (Broadcast)—Consists of a 200 mmfd. condenser and a 20 ohm resistor connected in series with each other and in series with the external oscillator.

Dummy 3: (Short Wave)—Consists of a .1 mfd. condenser and a 400 ohm resistor connected in series with each other and in series with the external oscillator.

ALIGNING I.F. TRANSFORMERS: (465 K. C.):

Part No. 108-106B Output I.F. Transformer
Part No. 108-105B Input I.F. Transformer

These I.F. transformers have two adjustments, both of which are accessible from the top of chassis (see top view).

1. With volume control full on, (the extreme right of its rotation), the band changing switch in the broadcast position, (extreme left of its rotation), and with the variable condenser in its minimum capacity position, plates entirely out of mesh, make the following adjustments:

   (a) Connect external oscillator set at 465 kilocycles, in series with "Dummy 1", to the control grid cap of the type 6S7G tube, and adjust the output I.F. transformer (No. 108-106B) to resonance.

   (b) With "Dummy 1" still connected, move oscillator output clip from grid of 6S7G to grid cap of 6D8G and adjust input I.F. transformer (No. 108-105B) to resonance.

SHORT WAVE BAND ALIGNMENT:
5.5 to 18.1 Megacycles

1. With band changing switch in the short wave position, extreme right of its rotation, and with external oscillator set at 17 megacycles and connected in series with "Dummy 3" to the antenna and ground leads, make the following adjustments:

   (a) Move dial pointer to 17 megacycles and adjust short wave oscillator trimmer to resonance.

   This adjustment is the trimmer mounted on the top of rear section of the variable gang condenser (see Fig. 1, top view).

   (b) Adjust short wave antenna trimmer (Adjustment Number 1), to resonance (see Fig. 3, bottom view).

BROADCAST BAND ALIGNMENT:
535 to 1720 Kilocycles

1. With band changing switch in the broadcast position, extreme left of its rotation, and with gang condenser in its minimum capacity position, plates entirely out of mesh, and with external oscillator connected in series with "Dummy 2" to antenna and ground leads make following adjustments:

   (a) Set external oscillator to 1720 K.C. and adjust broadcast oscillator trimmer to resonance. (Adjustment number 3, see bottom view of chassis, Fig. 3).

   (b) Re-set external oscillator to 1400 K.C., rotate variable gang condenser and pick up signal. Adjust broadcast antenna trimmer (adjustment number 2), to resonance.

   (c) Re-set external oscillator to 600 K.C., and adjust broadcast series pad (adjustment number 4), to resonance by rotating condenser to approximately 600 K.C., rocking it slowly to and fro until by adjusting series pad maximum output is attained. This adjustment is located on the bottom of the chassis directly under the variable gang condenser. (See bottom view of chassis, Fig. 3).

   (d) Repeat adjustments "a" and "b" until sensitivity is at its maximum.

   (e) Check for tracking and sensitivity at 1400, 1000, and 600 kilocycles. **Under no circumstances bend plates of variable condenser sections to correct tracking.**

©John F. Rider, Publisher

BELMONT RADIO CORP.

MODEL 504 Series A
Schematic, Socket
Trimmers, Parts
Alignment, Voltage

IN ORDER TO PREVENT SIGNAL FROM ACTING UPON AVC AND AFFECTING ACCURACY OF VOLTAGE MEASUREMENTS, AERIAL AND GROUND LEADS SHOULD BE SHORT CIRCUITED WHILE MAKING MEASUREMENTS.

All voltages are to be measured with 6.3 volts input to receiver. Resistances of coils and transformer windings are indicated in ohms on schematic circuit diagram.

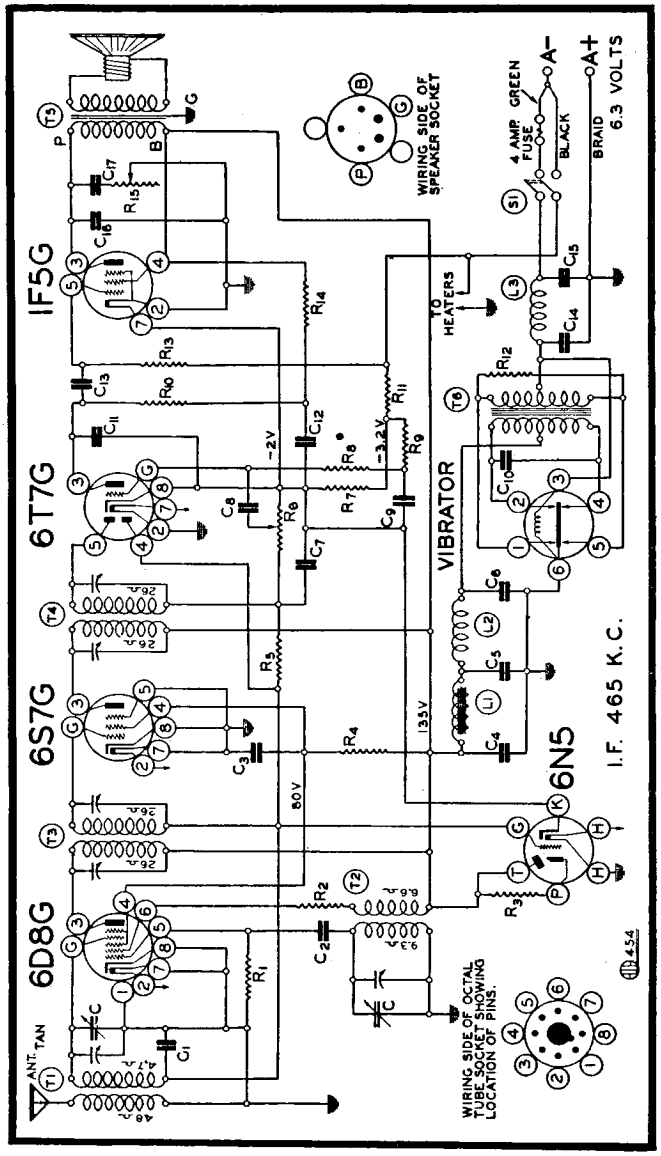

Voltages taken from different points of circuit to chassis are measured with volume control full on, all tubes in their sockets and speaker connected, with a volt meter having a resistance of 1000 ohms per volt. These voltages are clearly indicated on the circuit diagram.

ALIGNING I.F. TRANSFORMERS: (465 K. C.):

Part No. 108-85 Output I.F. Transformer.

Part No. 108-84 Input I.F. Transformer.

These I.F. Transformers have two adjustments, both of which are accessible from the top of chassis (see fig. 1, top view).

1. With volume control full on (the extreme right of its rotation), and with the variable condenser set to approximately 1400 kilocycles, make the following adjustments.
   (a) Connect external oscillator set at 465 kilocycles, in series with .1 mfd. condenser, to the control grid cap of the type 6S7G tube, and adjust the output I.F. transformer (No. 108-85) to resonance.
   (b) Move oscillator output clip from grid of 6S7G to grid cap of 6D8G and adjust input I.F. transformer (No. 108-84) to resonance.
   (c) With oscillator still connected to 6D8G readjust output I.F. transformer (108-85) if necessary.

R. F. ALIGNMENT: (535-1720 K.C.)

1. With gang condenser in its minimum capacity position, plates entirely out of mesh, connect an external oscillator in series with a 200 mmf. condenser to tan antenna and black ground leads and make the following adjustments:
   (a) With external oscillator set at 1720 kilocycles, adjust oscillator trimmer (rear of gang condenser).
   (b) Re-set external oscillator to 1400 kilocycles, rotate condenser, pick-up oscillator signal and adjust antenna trimmer to resonance (front section of gang condenser)
   (c) Check sensitivity at 600 and 1000 kilocycles.

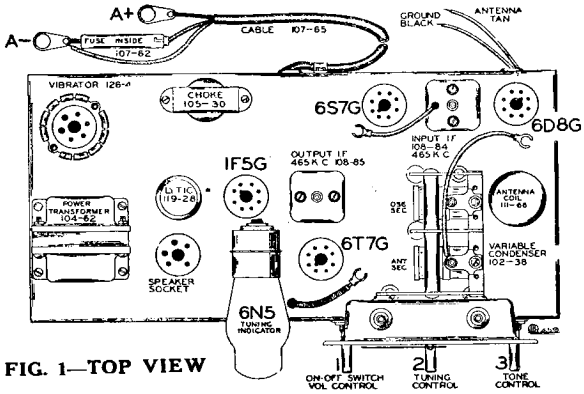

FIG. 1—TOP VIEW

MODEL 504 SERIES A

535-1720 Kilocycles Battery Operated

No.	Part No.	Description
		RESISTORS
R1	130-76	30M ohm - 1/3 w.
R2	130-23	2M ohm - 1/3 w.
R3	130-186	250M ohm - 1/10 w. - in tuning indicator
R4	130-123	15M ohm - 1/3 w.
R5	130-121	3.2 megohm - 1/3 w.
R6	101-56	1 megohm volume control
R7	106-36	10 ohms - resistor strip
R8	130-19	1 megohm - 1/3 w.
R9	130-19	1 megohm - 1/3 w.
R10	130-100	150M ohm - 1/3 w.
R11	106-36	25 ohms - resistor strip
R12	130-84	200 ohms - 1/3 w.
R13	130-19	1 megohm - 1/3 w.
R14	130-20	100M ohm - 1/3 w.
R15	101-72	300M ohm - tone control R7 and R11 in same unit
		CONDENSERS
C	102-38	2 gang variable
C1	100-9	.05 x 200 v.
C2	129-39	.0005 Mica
C3	100-33	.1 x 200 v.
C4	119-28	5.0 mfd. - 200 w. v. lytic
C5	119-28	5.0 mfd. - 200 w. v. lytic
C6	100-33	.1 x 200 v.
C7	129-5	.0001 Mica
C8	100-11	.01 x 400 v.
C9	100-11	.01 x 400 v.
C10	100-34	.005 x 1200 v.
C11	125-12	.00025 Mica
C12	100-33	.1 x 200 v.
C13	100-11	.01 x 400 v.
C14	100-40	.5 x 200 v.
C15	100-40	.5 x 200 v.
C16	100-37	.003 x 600 v.
C17	100-11	.01 x 400 v. C4 and C5 in same unit
		PARTS
T1	111-66	Antenna coil complete
T2	110-45	Oscillator coil complete
T3	108-84	Input I.F. coil complete - 465 kc.
T4	108-85	Output I.F. coil complete - 465 kc.
T5	114-63	P.M. Speaker
T6	104-62	Power Transformer
L1	105-30	Filter Choke
L2	123-3	R. F. "B" Choke
L3	105-19	"A" Choke
S1		Switch on volume control
	126-4	Vibrator

©John F. Rider, Publisher

MODEL 505 Series A
Serial 7J851300 up
Schematic, Voltage

BELMONT RADIO CORP.

Socket, Trimmers
Parts

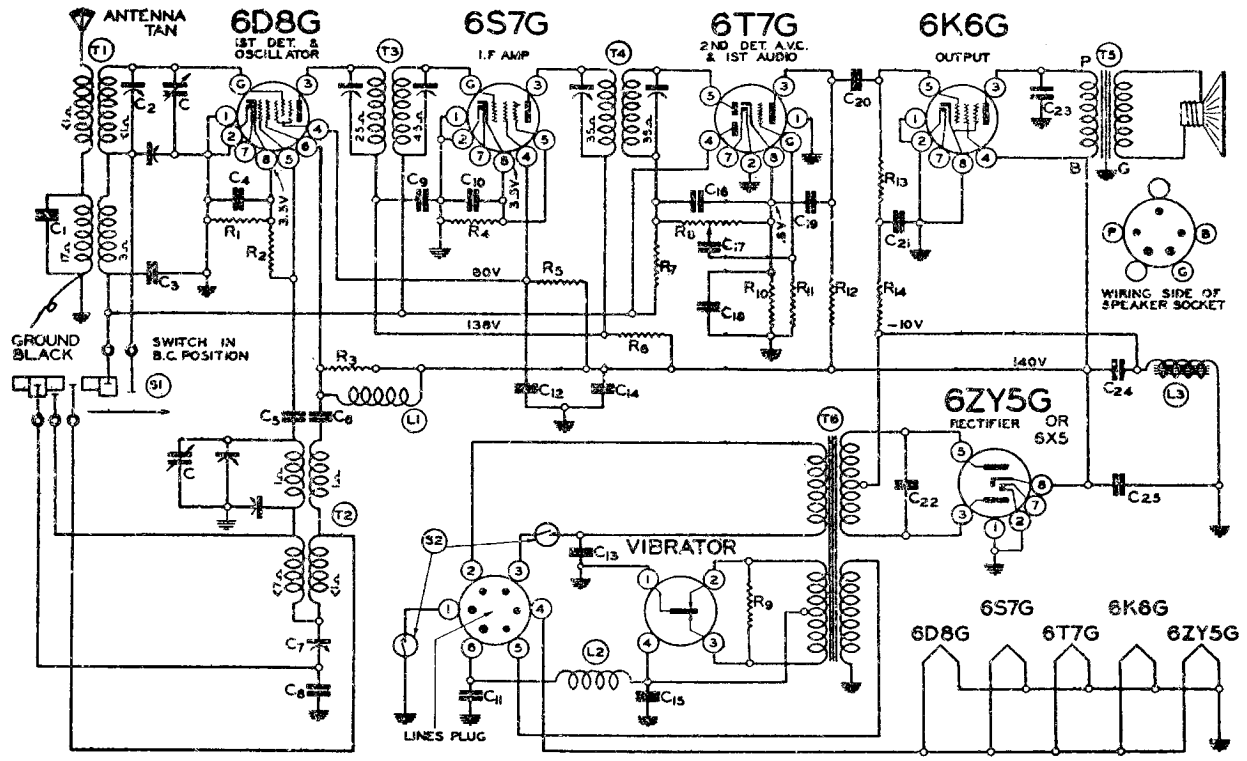

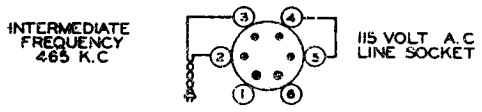

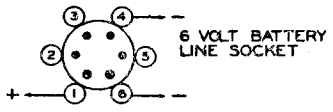

447

MODEL 505 SERIES "A"

(Serial No. 7J851300 and up)

FOR ALIGNMENT SEE INDEX

T1	111-83	Antenna Coil
T2	110-66B	Oscillator Coil
T3	108-105B	Input I.F.
T4	108-106B	Output I.F.
T5	114-95	or
	114-96	Speaker
T6	104-114	Power Transformer
L1	123-4	"B" Choke
L2	105-19	"A" Choke
S1	125-39	Wave band switch
S2		Off-On Switch on Volume Control
L3	105-52	300 ohm 4.5 henry filter choke

R1	130-70	500 ohm - 1/3 w.
R2	130-12	50M ohm - 1/3 w.
R3	130-12	50M ohm - 1/3 w.
R4	130-92	1000 ohm - 1/3 w.
R5	130-149	15M ohm - 1/3 w.
R6	130-192	2M ohm - 1/3 w.
R7	130-170	3 megohm - 1/3 w.
R8	101-91	1 meg volume control
R9	130-84	200 ohm - 1/3 w.
R10	130-192	2M ohm - 1/3 w.
R11	130-19	1 meg - 1/3 w.
R12	130-100	150M ohm - 1/3 w.
R13	130-3	500M ohm - 1/3 w.
R14	130-11	250M ohm - 1/3 w.
C	102-43	2 gang variable
C1	129-5	.0001 Mica
C2	124-39B	Adj. condenser
C3	100-22	.05 x 200
C4	100-20	.1 x 200
C5	129-39	.00005 Mica
C6	100-25	.002 x 600
C7	124-38	Series Pad
C8	129-54	.003 Mica
C9	100-6	.25 x 200
C10	100-20	.1 x 200
C11	100-40	.5 x 200
C12	100-20	.1 x 200
C13	129-82	.003 Mica
C14	129-12	.00025 Mica
C15	100-40	.5 x 200
C16	129-5	.0001 Mica
C17	100-11	.01 x 400
C18	119-22	10 mfd. lytic 25 wv.
C19	129-12	.00025 Mica
C20	100-11	.01 x 400
C21	100-20	.1 x 200
C22	100-73	.008 x 1200
C23	100-37	.003 x 600
C24	119-24B	5 mfd. lytic
C25	119-24B	5 mfd. lytic

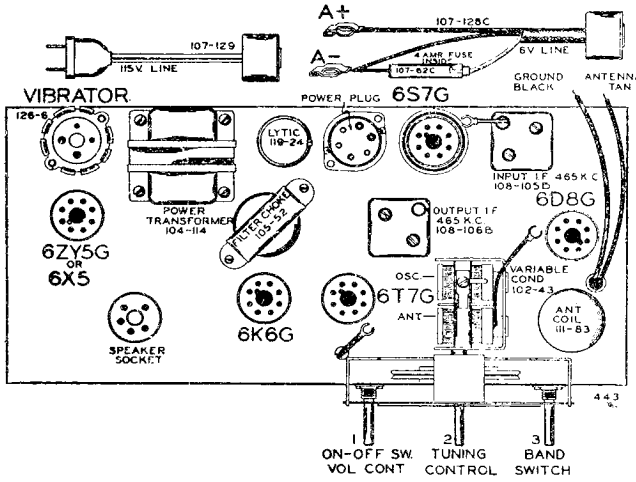

FIG. 1—TOP VIEW

BAND DIAL SCALE FREQUENCY RANGE

Broadcast..... Upper..... 535 to 1720 K.C. (Kilocycles)
Short Wave.. Lower..... 5.5 to 18.1 M.C. (Megacycles)

©John F. Rider, Publisher

Alignment, Parts
Tuner

BELMONT RADIO CORP.

MODEL 517 Series A
Schematic, Voltage
Socket, Trimmers

Voltages taken from different points of circuit to chassis are measured with volume control full on, all tubes in their sockets and speaker connected, with a volt meter having a resistance of 1000 ohms per volt.

All voltages as indicated on diagram are measured with 115 volts on the primary of the power transformer.

FIG. 1—TOP VIEW

ALIGNING I.F. TRANSFORMERS: (465 K.C.):

Part No. 108-83C Output I.F. Transformer
Part No. 108-82B Input I.F. Transformer

These I.F. transformers have two adjustments, both of which are accessible from the top of chassis (see Fig. 1).

1. With volume control full on (the extreme right of its rotation), and with the variable condenser set to approximately 1400 kilocycles, make the following adjustments:

   (a) Connect external oscillator set at 465 kilocycles, in series with .1 mfd. condenser, to the control grid cap of the type 6K7 tube, and adjust the output I.F. transformer (No. 108-83C) to resonance.

   (b) Move oscillator output clip from grid of 6K7 to grid of 6A7 and adjust input I.F. transformer (No. 108-82B) to resonance.

   (c) With oscillator still connected to 6A7, readjust output I.F. transformer (108-83C) if necessary.

R.F. ALIGNMENT: (535-1720 K.C.)

1. With gang condenser in its minimum capacity position, plates entirely out of mesh, connect an external oscillator in series with a 200 mmf. condenser to the antenna lead and chassis ground and make the following adjustments:

   (a) With external oscillator set at 1720 kilocycles, adjust oscillator trimmer to resonance. This adjustment is on the top of rear section of variable gang condenser. (See Fig. 1).

   (b) Re-set external oscillator to 1400 kilocycles, rotate condenser, pick up oscillator signal and adjust antenna trimmer to resonance. (Top of front section of gang condenser).

   (c) Check sensitivity at 600 and 1000 kilocycles.

Mica condensers are coded with an additional dot indicating tolerance:

Color of Dot	Tolerance percent
White	2½ %
Green	5%
Blue	10%
Yellow	15%
Red	20%
None	More Than 20%

Part No.	Circuit Diagram Reference	Description
		CONDENSERS
100-9	C1	.05 x 200 Volt Tubular
100-11	C5	.01 x 400 Volt Tubular
100-19	C9	.006 x 600 Volt Tubular
100-26	C7	.02 x 400 Volt Tubular
100-71	C8	.004 x 600 Volt Tubular
100-74	C3	.1 x 400 Volt Tubular (with Bracket)
119-38	C10, C11	5MFD x 200 w.v.; 5MFD x 250 w.v. Electrolytic Filter
129-2	C6	.0005 Mica - Type MT - 20%
129-5	C4	.0001 Mica - Type MT - 20%
129-75	C2	.0003386 Mica Compression Type Padder
		RESISTORS
106-29	R6, R7, R8	100 Ohm; 33 Ohm; 200 Ohm Metal Clad Resistor
130-4	R4, R9	3 Meg Ohm - 1/3 Watt - 20%
130-9	R10	200M Ohm - 1/3 Watt - 20%
130-12	R2	50M Ohm - 1/3 Watt - 20%
130-17	R1	10M Ohm - 1/3 Watt - 20%
130-118	R11	600M Ohm - 1/3 Watt - 20%
130-149	R3	15M Ohm - 1/3 Watt - 20%
		COILS
108-82B	T3	Input I.F. Coil Assembly Complete With Can
108-83C	T4	Output I.F. Coil Assembly Complete With Can
110-62	T2	Oscillator Coil Assembly Complete
111-78	T1	Antenna Coil Assembly Complete
		SOCKETS
121-6		Six Prong Socket - Marked "41"
121-6		Six Prong Socket - Marked "75"
121-7		Seven Prong Socket - Marked "6A7"
121-8		Five Prong Socket - Marked "SPKR"
121-9		Four Prong Socket - Marked "80"
121-27		Eight Prong Octal Socket - Marked "6K7"
		TRANSFORMERS
104-106B	T7	Power Transformer 50/60 Cycle 105-115 Volt
104-102B		Universal 50/60 Cycle Transformer
104-108		Power Transformer 25/60 Cycle - 105-115 Volts
104-104B		Universal 25/60 Cycle Transformer
104-99B		Universal 40/60 Cycle Transformer

PROCEDURE FOR SETTING THE "PRESTO-MATIC" LEVERS:

There are six levers on the dial by means of which six stations may be selected,

Press down any one of the six "Presto-matic" levers. Holding it down, tune in by means of knob No. 3 any one of your favorite stations. Turn the tuning knob very slowly back and forth until the signal is clearest. The station will then be accurately tuned in.

Release the lever and press down any other "Presto-matic" lever and again hold it down, tune in by means of knob No. 3 another favorite station.

When you have selected all your favorite stations, hold tuning knob No. 3 securely and with a coin or a screw driver, tighten the special locking screw ("D") in the center of the tuning knob, (See Fig. 1).

This screw will lock in place all the stations you have selected on the "Presto-matic" levers. (Note: Locking Screw "D" is loose when radio is shipped from factory).

If you should desire to change any station you selected to another, hold tuning knob No. 3 securely, loosen locking screw ("D") and select the new station as explained.

(No. 7K [illegible] and up)

		SPEAKER
114-97	T6	Five Inch Dynamic Speaker (Field 2000 Ohm)
		MISCELLANEOUS
101-59	R12	Tone Control (1 Meg Ohm)
101-94	R5, S1	Volume Control and Switch (1 Meg Ohm)
102-61	C	Two Gang Variable Condenser
105-53	T5	Output Transformer (For Speaker)
107-5D		Line Cord and Plug
128-109		Wood Knob (Spring Type)
128-126		Special Tuning Knob

©John F. Rider, Publisher

MODEL 523
Schematic, Socket
Trimmers, Voltage
Alignment, Parts

BELMONT RADIO CORP.

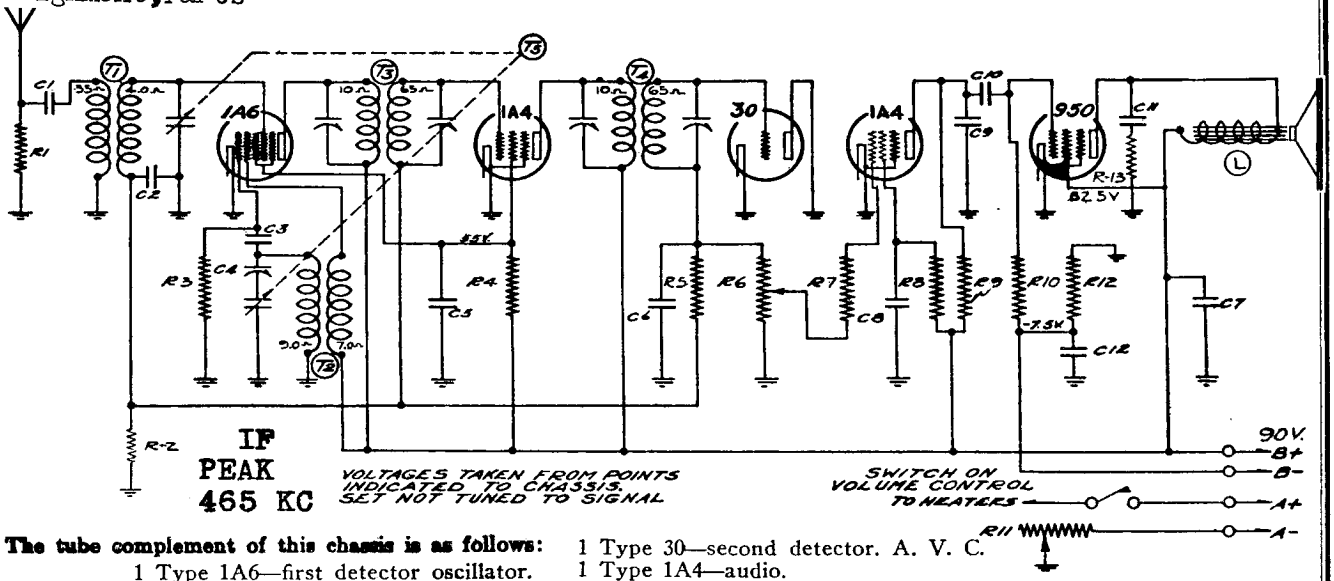

The tube complement of this chassis is as follows:

1 Type 1A6—first detector oscillator.
1 Type 1A4—I.F. amplifier.
1 Type 30—second detector. A. V. C.
1 Type 1A4—audio.
1 Type 950—output.

No.	Part No.	Description
		RESISTORS
R1	130-17	10M Ohm - 1/3 W. - 20% - Carbon
R2	130-38	2 meg " - 1/3 W. - 20% - Carbon
R3	130-52	50M " - 1/3 W. - 20% - Carbon
R4	130-17	10M " - 1/3 W. - 20% - Carbon
R5	130-38	2 meg " - 1/3 W. - 20% - Carbon
R6	101-69	1 meg " - Volume Control - and Switch
R7	130-52	50M " - 1/3 W. - 20% - Carbon
R8	130-19	1 meg " - 1/3 W. - 20% - Carbon
R9	130-9	200M ohm 1/3 W. - 20% - Carbon
R10	130-19	1 meg " - 1/3 W. - 20% - Carbon
R11	101-44	4.75 " - Rheostat
R12	130-93	450 " - 1/3 W. - 10% - Carbon
R13	130-52	50M " - 1/3 W. - 20% - Carbon
		CONDENSERS
C1	100-11	.01 x 400 v. - 25%
C2	100-22	.05 x 200 v. - 25%
C3	129-12	.00025 Mica - MT - 20%
C4	124-14	Series Pad
C5	100-9	.05 x 200 v. - 25%
C6	129-5	.0001 Mica - MT - 20%
C7	100-48	.25 x 200 v.
C8	100-9	.05 x 200 v. - 25%
C9	129-2	.0005 Mica - MT - 20%
C10	100-11	.01 x 400 v. - 25%
C11	100-11	.01 x 400 v. - 25%
C12	119-22	10.0 mfd. x 25 v. - Working Volt
		PARTS
T1	111-46	Antenna Coil
T2	110-36	Oscillator Coil
T3	108-67	Input I. F. Coil - 46 kc.
T4	108-68	Output I. F. Coil - 465 kc.
T5	102-42	Two Gang Condenser
L	114-19	Six Inch Magnetic Speaker

ALIGNING I.F. TRANSFORMERS: (465 K.C.)

1. With volume control full on and with variable condenser at its minimum capacity position, plates entirely out of mesh, and with external oscillator set at 465 K.C. connected in series with a .1 mfd. condenser, to the grid of the 1A6 tube (cap at top of tube), adjust I.F. transformers, parts number 108-67 and 108-68, to resonance. Both of these transformers have two (2) adjustments each, they are accessible from the tops of the cans (for location see top view).

   Use as a resonance indicator an output meter connected across the outside terminals of the speaker or by means of an adapter to the plate and screen of the type 950 output tube. Maximum deflection of the volt meter indicates resonance.

   Use only enough signal to get a readily readable output.

   A low range output meter or the low scale of a multi-range meter should be used.

BROADCAST BAND ALIGNMENT:

1. Set external oscillator to 1720 K.C. and connect it in series with a 200 mmfd. condenser to the antenna and ground posts.
   (a) With variable condenser in its minimum capacity position, plates entirely out of mesh, adjust oscillator trimmer (rear section of variable condenser) to resonance.
   (b) Re-set external oscillator to 1400 K.C. Rotate variable condenser, pick up signal and adjust antenna trimmer (front section of variable condenser) to resonance.
   (c) Re-set external oscillator to 600 K.C., move dial pointer to 600 K.C., and adjust series pad, part number 124-14 (see top view), to resonance. While making this adjustment, slowly rock variable condenser to and fro until maximum output is obtained.
   (d) Check for sensitivity at 1400, 1000, 600 K.C. DO NOT BEND PLATES.

TOP VIEW MODEL 523

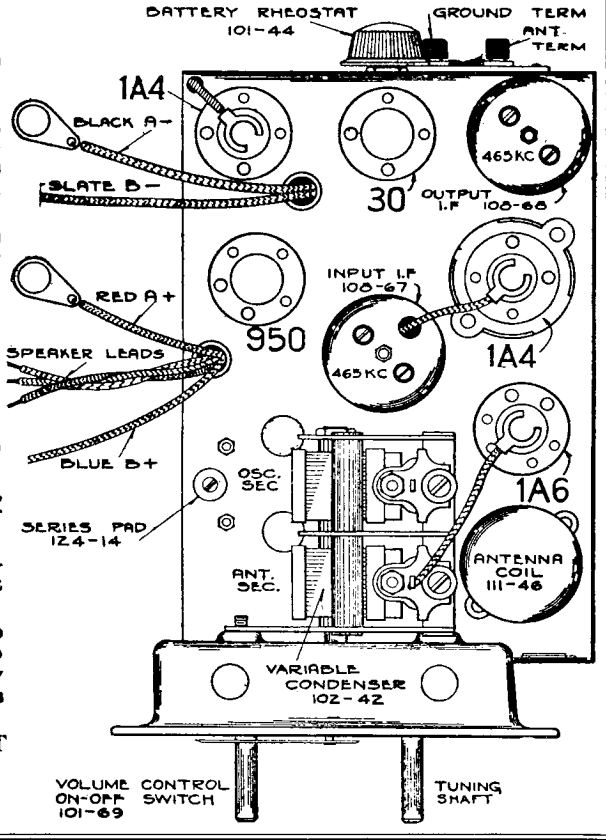

©John F. Rider, Publisher

MODEL 523B
Schematic, Socket
Trimmers, Voltage
Alignment, Parts

BELMONT RADIO CORP.

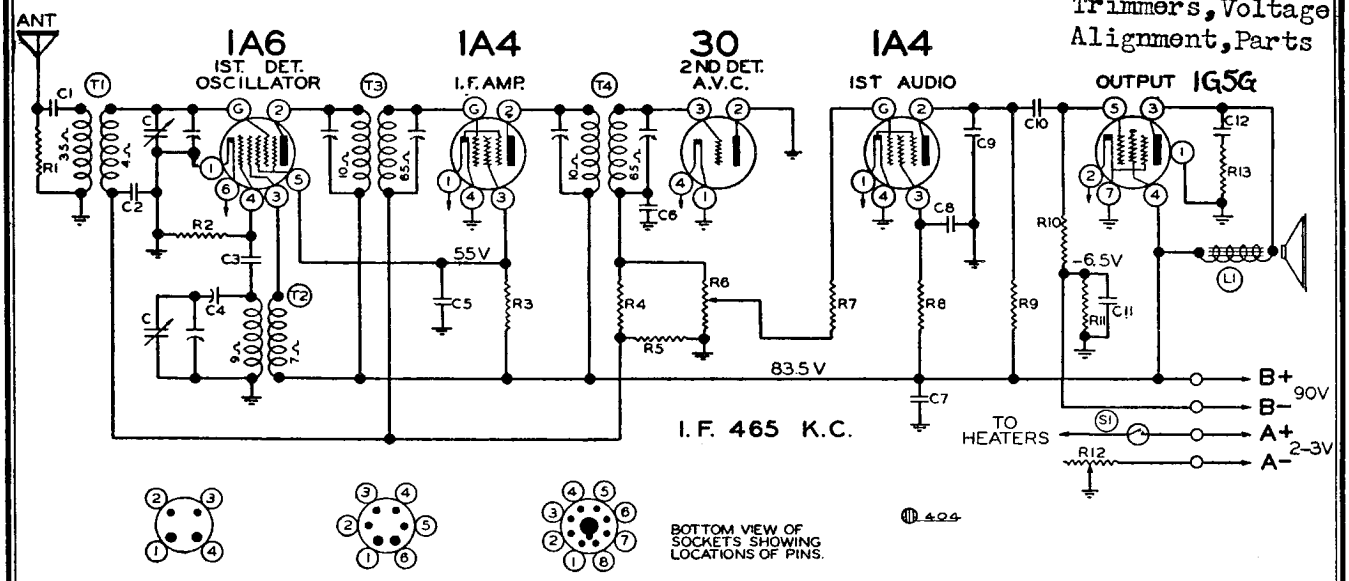

No.	Part No.	Description		No.	Part No.	Description	
		CONDENSERS		C11	119-22	10.0 mfd. x 25 w. v.	
C	102-56	2 Gang Variable Condenser		C12	100-11	.01 x 400 v.	25%
C1	100-11	.01 x 400 v.	25%			**RESISTORS**	
C2	100-22	.05 x 200 v.	25%	R1	130-17	10M ohm - 1/3 w.	20%
C3	129-12	.00025 Mica	20%	R2	130-52	50M ohm - 1/3 w.	20%
C4	124-14	Series Pad		R3	130-17	10M ohm - 1/3 w.	20%
C5	100-9	.05 x 200 v.	25%	R4	130-38	2 megohm - 1/3 w.	20%
C6	129-5	.0001 Mica	20%	R5	130-38	2 megohm - 1/3 w.	20%
C7	100-48	.25 x 200 v.	20%	R6	101-69	1 megohm Volume Control	
C8	100-9	.05 x 200 v.	25%	R7	130-52	50M ohm - 1/3 w.	20%
C9	129-2	.0005 Mica	20%	R8	130-19	1 megohm - 1/3 w.	20%
C10	100-11	.01 x 400 v.	25%	R9	130-9	200M ohm - 1/3 w.	20%
				R10	130-19	1 megohm - 1/3 w.	20%
				R11	130-93	450 ohm - 1/3 w.	10%
				R12	101-44	475 ohm Rheostat	
				R13	130-52	50M ohm - 1/3 w.	20%
						PARTS	
				T1	111-46	Antenna Coil Complete	
				T2	110-36	Oscillator Coil Complete	
				T3	108-67	Input I.F. Coil Complete	
				T4	108-68	Output I.F.Complete	
				L1	114-76	6" P. M. Speaker	
				L1	114-19	Speaker - 6" Magnetic	
				S1		Switch on Volume Control	

ALIGNING I.F. TRANSFORMERS: (465 K.C.)

1. With volume control full on and with variable condenser at its minimum capacity position, plates entirely out of mesh, and wth external oscillator set at 465 K.C. connected in series with a .1 mfd. condenser, to the grid of the 1A6 tube (cap at top of tube), adjust I.F. transformers, parts number 108-67 and 108-68, to resonance. Both of these transformers have two (2) adjustments each, they are accessible from the tops of the cans (for location see top view).

   Use as a resonance indicator an output meter connected across the outside terminals of the speaker or by means of an adapter to the plate and screen of the type 1G5G output tube. Maximum deflection of the volt meter indicates resonance.

   Use only enough signal to get a readily readable output.

   A low range output meter or the low scale of a multi-range meter should be used.

BROADCAST BAND ALIGNMENT:

1. Set external oscillator to 1720 K.C. and connect it in series with a 200 mmfd. condenser to the antenna and ground posts.
   (a) With variable condenser in its minimum capacity position, plates entirely out of mesh, adjust oscillator trimmer (rear section of variable condenser) to resonance.
   (b) Re-set external oscillator to 1400 K.C. Rotate variable condenser, pick up signal and adjust antenna trimmer (front section of variable condenser) to resonance.
   (c) Re -set external oscillator to 600 K.C., move dial pointer to 600 K.C., and adjust series pad, part number 124-14 (see top view), to resonance. While making this adjustment, slowly rock variable condenser to and fro until maximum output is obtained.
   (d) Check for sensitivity at 1400, 1000, 600 K.C. DO NOT BEND PLATES.

FOR BEST OPERATION THIS RECEIVER MUST HAVE AN OUTSIDE AERIAL NOT OVER FIFTY FEET LONG INCLUDING THE LEAD IN.

Frequency Range 535-1720 Kilocycles

TOP VIEW MODEL 523B

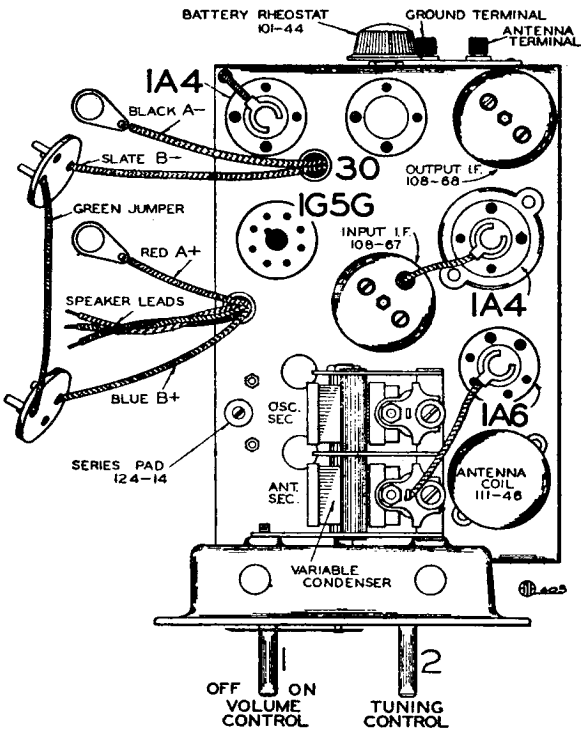

©John F. Rider, Publisher

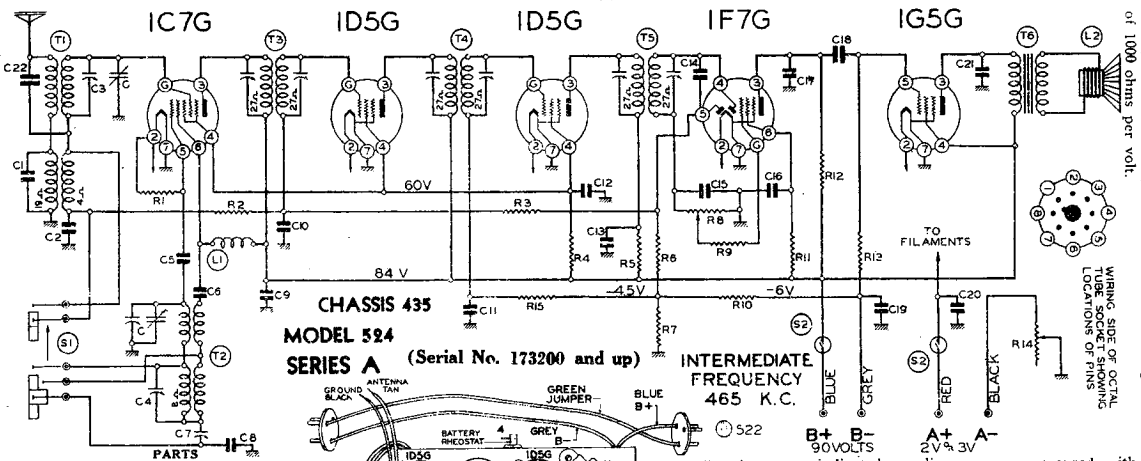

Voltages taken from different points of circuit to chassis are measured with volume control full on, all tubes in their sockets and speaker connected, with a volt meter having a resistance of 1000 ohms per volt.

The approximate current consumption is "A"—120 ma., "B"—16 ma.

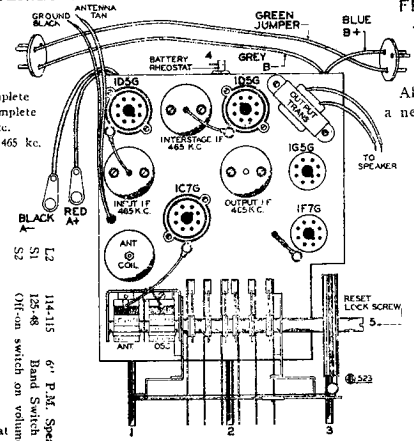

FIG. 1—TOP VIEW

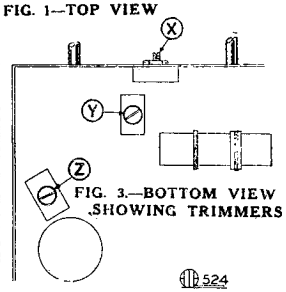

FIG. 3.—BOTTOM VIEW SHOWING TRIMMERS

All voltages as indicated on diagram, are measured with a new set of batteries.

Dummy 2: (Broadcast)—Consists of a 200 mmfd. condenser and a 20 ohm resistor connected in series with each other and in series with the external oscillator.

Dummy 3: (Short Wave)—Consists of a .1 mfd. condenser and a 400 ohm resistor connected in series with each other and in series with the external oscillator.

ALIGNING I. F. TRANSFORMERS: (465 K.C.):

Part No. 108-79C Output I. F. Transformer
Part No. 108-78C Interstage I. F. Transformer
Part No. 108-116 Input I.F. Transformer

These I.F. transformers have two adjustments, both of which are accessible from the top of chassis (see Fig. 1 Top View).

1. With volume control full on, (the extreme right of its rotation), the band changing switch in the broadcast position, (extreme left of its rotation), and with the variable condenser set to minimum capacity (plates out of mesh), make the following adjustments:
   (a) Connect external oscillator set at 465 kilocycles, in series with "Dummy 1", to the control grid cap of the type 1D5G 2nd. I.F. Tube and adjust the output I.F. transformer (No. 108-79C) to resonance.
   (b) With "Dummy 1" still connected, move oscillator output clip from grid of 1D5G 2nd. I.F. Tube to grid cap of 1D5G 1st. I.F. Tube and adjust interstage I.F. transformer (No. 108-78C) to resonance.
   (c) Move oscillator to grid cap of 1C7G and adjust input I.F. transformer (No. 108-116).

SHORT WAVE BAND ALIGNMENT:

5.5 to 18.1 Megacycles

1. With band changing switch in the short wave position, extreme right of its rotation, and with external oscillator set at 17 megacycles and connected in series with "Dummy 3" to the antenna and ground leads, make the following adjustments:
   (a) Move dial pointer to 17 megacycles and adjust short wave oscillator trimmer to resonance.

   This adjustment is the trimmer mounted on the top of front section of the variable gang condenser (see Fig. 1, top view).
   (b) Adjust short wave antenna trimmer (Adjustment "Z"), to resonance (see Fig. 3, bottom view).

BROADCAST BAND ALIGNMENT:

535 to 1750 Kilocycles

1. With band changing switch in the broadcast position, extreme left of its rotation and with external oscillator connected in series with "Dummy 2" to antenna and ground leads make following adjustments:
   (a) Set external oscillator and dial on radio to 1400 K.C. and adjust broadcast oscillator trimmer to resonance. (Adjustment "Y"), (see bottom view of Chassis, Fig. 3). Tune gang condenser slowly back and forth while making this adjustment.
   (b) Re-set external oscillator to 600 K.C., and adjust broadcast series pad (adjustment "X") to resonance by rotating condenser to approximately 600 K.C., rocking it slowly to and fro until by adjusting series pad maximum output is attained. This adjustment is located on the front flange of the chassis. (See bottom view of chassis, Fig. 3.)
   (c) Repeat adjustment "a" and "b" until sensitivity is at its maximum, also check to see that radio tunes to 1750 K.C.
   (d) Check for tracking and sensitivity at 1400, 1000, and 600 kilocycles. **Under no circumstances bend plates of variable condenser sections to correct tracking.**

PROCEDURE FOR SETTING THE AUTOMATIC LEVERS:

There are six levers on the dial by means of which six stations may be selected,

Press down any one of the six levers. Holding it down, tune in by means of tuning knob No. 3 any one of your favorite stations. Turn the tuning knob very slowly back and forth until signal is clearest. The station will then be accurately tuned in. Adjust the volume by means of the volume control knob to the desired intensity.

Release this lever and press down any other lever. Hold this lever down and tune in by means of knob No. 3 another favorite station.

Follow this procedure until stations have been set on all the levers.

Rotate the tuning knob (No. 3) to the right (clockwise) as far as it will turn. Now remove from the right side of the cabinet the metal button, and, with a screw driver inserted through the hole, tighten the reset locking adjustment screw "5", (see Fig. 1). It is VERY IMPORTANT that this locking screw is turned until it is ABSOLUTELY TIGHT.

This screw will lock in place all the stations you have selected on the levers. (Note: Reset Lock Screw "5" is loose when radio is shipped from factory).

If you should desire to change any station you selected to another, loosen the reset locking screw "5" four or five complete turns; select the new station as explained. (Note: If the dial mechanism works hard when setting up a new station for one of the automatic tuner levers, it is due to the locking screw being too tight. Loosen the reset locking screw "5" until the dial mechanism works freely with the tuner lever pressed down).

BE SURE TO RETIGHTEN THE RESET LOCK SCREW, otherwise the stations will not stay adjusted to the levers.

PARTS

T1	111-99	BC - SW Antenna coil complete
T2	110-80	BC - SW Oscillator coil complete
T3	108-116	Input I.F. Complete - 465 kc.
T4	108-78C	Interstage I.F. Complete - 465 kc.
T5	108-79C	Output I.F. Complete
T6	105-69	Output Transformer
L1	123-3	R.F. "B" Choke
L2	114-115	6" P.M. Speaker
S1	125-48	Band Switch
S2		(Ganged switch on volume control - D.P.D.T.)

RESISTORS

R1	130-20	100M ohm - 1/3 w. 20%
R2	130-20	100M ohm - 1/3 w. 20%
R3	130-19	1 megohm - 1/3 w. 20%
R4	130-167	7500 ohm - 1/3 w. 20%
R5	130-85	3000 ohm - 1/3 w. 20%
R6	130-19	1 megohm - 1/3 w. 20%
R7	130-83	300 ohm - 1/3 w. 10%
R8	101-111	250M ohm - volume control
R9	130-12	50M ohm - 1/3 w. 20%
R10	130-168	100 ohm - 1/3 w. 10%
R11	130-19	1 megohm - 1/3 w. 20%
R12	130-11	250M ohm - 1/3 w. 20%
R13	130-19	1 megohm - 1/3 w. 20%
R14	101-112	3.2 ohm - Filament Rheostat
R15	130-19	1 megohm - 1/3 w. 20%

CONDENSERS

C	102-70	2 gang variable condenser
C1	129-40	.0001 mica 10%
C2	100-22	.05 x 200 v. 25%
C3	129-39	2-20 mmf. Adj. Cond.
C4	129-39	2-20 mmf. Adj. Cond.
C5	129-38	.00005 Mica 10%
C6	100-25	.002 x 600 v. 25%
C7	124-38	580 mmf. Working Capacity-Series Pad
C8	129-94	.003 minimum 2-1/2%
C9	100-50	.25 x 200 v. 20%
C10	100-86	.02 x 400 v. 25%
C11	100-59	.05 x 200 v. 25%
C12	100-50	.25 x 200 v. 20%
C13	100-20	.1 x 200 v. 25%
C14	129-3	.00002 Mica 20%
C15	129-60	.00015 Mica 20%
C16	100-20	.1 x 200 v. 25%
C17	129-21	.0002 Mica 20%
C18	100-11	.01 x 400 v. 25%
C19	119-52	25.0 mfd. 25 w.v.
C20	100-50	.25 x 200 v. 20%
C21	100-71	.004 x 600 v. 25%
C22	120-175	.000004 Coupling Capacity

FREQUENCY RANGE

535 to 1750 K.C. (Kilocycles)
5.5 to 18.1 M.C. (Megacycles)

DUMMY ANTENNAS:

The following dummy antennas are used in aligning and are referred to in the following alignment instructions as "Dummy 1", "Dummy 2", and "Dummy 3".

Dummy 1: (I.F.)—Consists of a .1 mfd. condenser connected in series with the external oscillator.

BELMONT RADIO CORP.

MODEL 526
Schematic, Socket
Trimmers, Voltage
Alignment, Parts

Voltages taken from different points of circuit to chassis are measured with volume control full on, all tubes in their sockets and speaker connected, with a volt meter having a resistance of 1000 ohms per volt.

All voltages as indicated on diagram are measured with 115 volts on the primary of the power transformer.

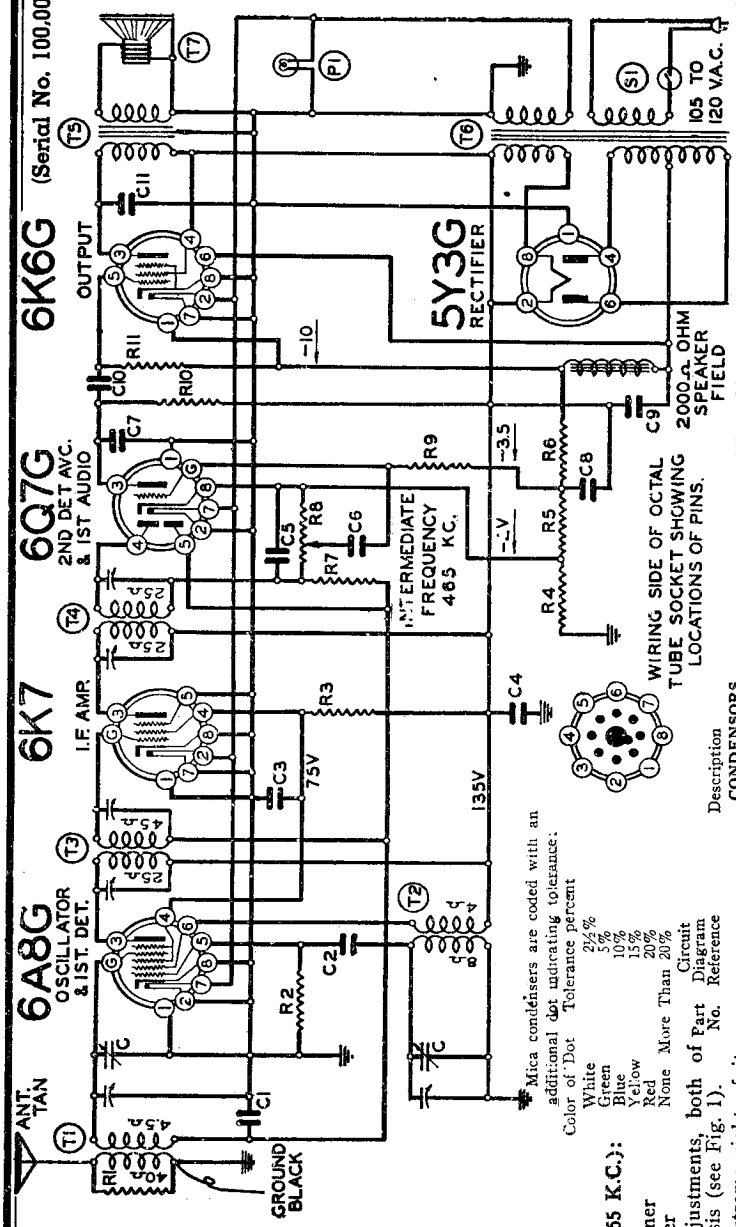

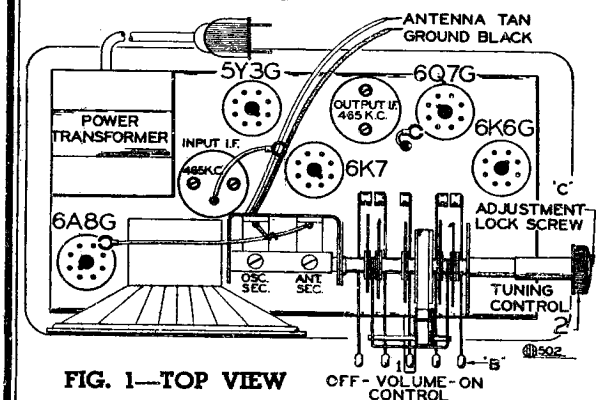

FIG. 1—TOP VIEW

ALIGNING I.F. TRANSFORMERS: (465 K.C.):

Part No.108-95B Output I.F. Transformer
Part No. 108-96 Input I. F. Transformer

These I.F. transformers have two adjustments, both of which are accessible from the top of chassis (see Fig. 1).

1. With volume control full on (the extreme right of its rotation), and with the variable condenser set to approximately 1400 kilocycles, make the following adjustments:
   (a) Connect external oscillator set at 465 kilocycles, in series with .1 mfd. condensor, to the control grid cap of the type 6K7 tube, and adjust the output I.F. transformer (No. 108-95B) to resonance.
   (b) Move oscillator output clip from grid of 6K7 to grid of 6A8G and adjust input I.F. transformer (No. 108-96) to resonance.
   (c) With oscillator still connected to 6A8G, readjust output I.F. transformer (108-95B) if necessary.

R.F. ALIGNMENT: (535-1720 K.C.)

1. With the gang condenser in its minimum capacity position, plates entirely out of mesh, connect an external oscillator in series with a 100 mmf. condensor to the antenna lead and chassis ground and make the following adjustments:
   (a) With external oscillator set at 1720 kilocycles, adjust oscillator trimmer to resonance. This adjustment is on the top of rear section of variable gang condenser. (See Fig. 1).
   (b) Re-set external oscillator to 1400 kilocycles, rotate condenser, pick up oscillator signal and adjust antenna trimmer to resonance. (Top of front section of gang condenser).
   (c) Check sensitivity at 600 and 1000 kilocycles.

PROCEDURE FOR SETTING THE AUTOMATIC LEVERS:

There are five levers on the dial by means of which five stations may be selected,

Press DOWN ALL THE WAY any one of the automatic tuner levers. Holding it down FIRMLY, tune in by means of the tuning knob (No. 2) the station indicated on the station call letter tab above this lever. Turn the tuning knob very slowly back and forth (while still holding lever in downward position) until the signal is clearest. The station will then be accurately tuned in. Release the lever.

Press down another automatic tuner lever. Holding it down FIRMLY, carefully tune in the station indicated on the call letter tab above this lever. Release this lever.

Follow this procedure until you have selected all of your favorite stations.

Now hold tuning knob securely with left hand to prevent it from turning, or Rotate the tuning knob (No. 2) to the right (clockwise) as far as it will turn, and with a coin (half dollar), tighten the special locking screw ("C") in the center of the tuning knob, (See Fig. 1).

This screw will lock in place all the stations you have selected on the automatic tuner levers. (Note: Locking screw "C" is loose when radio is shipped from factory).

If you should desire to change any station you selected to another, hold the tuning knob No. 2 securely and with a coin loosen the locking screw "C" one or two turns; select the new station as explained. **Be sure to retighten the locking screw,** otherwise the stations you have selected will not stay adjusted to the levers.

Description	Circuit Reference	Part No.	Tolerance percent
CONDENSORS			
.1 x 400 volt Tubular Condenser	C3	100-1	2½%
.05 x 200 volt Tubular Condenser	C1	100-9	5%
.01 x 400 volt Tubular Condenser	C6, C10	100-11	10%
.05 x 400 volt Tubular Condenser	C4	100-13	15%
.006 x 600 volt Tubular Condenser	C11	100-19	20%
Dual 5MFD x 250 W. V. Filter Condenser	C8, C9	119-47D	
Mica Type Condenser — 20%	C7	129-2	
Mica Type Condenser — 20%	C5	129-5	
Mica Type Condenser — 20%	C2	129-12	
RESISTORS			
65 Ohm, 45 Ohm, 220 Ohm Metal Clad	R4, R5, R6	106-35	
200M Ohm — 1/3 Watt Resistor — 20%	R10	130-9	
50M Ohm — 1/3 Watt Resistor — 20%	R2	130-12	
20M Ohm — 1/3 Watt Resistor — 20%	R1	130-21	
600M Ohm — 1/3 Watt Resistor — 20%	R11	130-118	
15M Ohm — 1/3 Watt Resistor — 20%	R3	130-149	
3 Megohm — 1/3 Watt Resistor — 25%	R7, R9	130-170	
COILS			
Output I.F. Coil Assembly Complete with can	T4	108-95B	
Input I.F. Coil Assembly Complete with can	T3	108-96	
Oscillator Coil Assembly Complete	T2	110-73	
Antenna Coil Assembly Complete	T1	111-92	
SOCKETS			
Eight Prong Octal Socket for "6K6"		121-93	
Eight Prong Octal Socket for "6Q7"		121-93	
Eight Prong Octal Socket for "6A8"		121-93	
Eight Prong Octal Socket for "5Y3"		121-93	
Seven Prong Octal Socket for "6K7"		121-94	
TRANSFORMERS			
50/60 Cycle Transformer 105-115 volt Primary	T6	104-129	
25/60 Cycle Transformer 105-115 volt Primary		104-130	
SPEAKER			
Five Inch Dynamic Speaker (Field 2000 Ohms)	T7	114-111	
Output Transformer for Speaker (Mounted on Chass	T5	105-55c	
MISCELLANEOUS			
Volume Control and Switch (300M Ohms)	R8, S1	101-107	
Two Gang Variable Condenser	C	102-67	

©John F. Rider, Publisher

MODEL 531 Series B
Serial 187500 up
Schematic, Voltage

BELMONT RADIO CORP.

Socket, Trimmers
Alignment, Parts

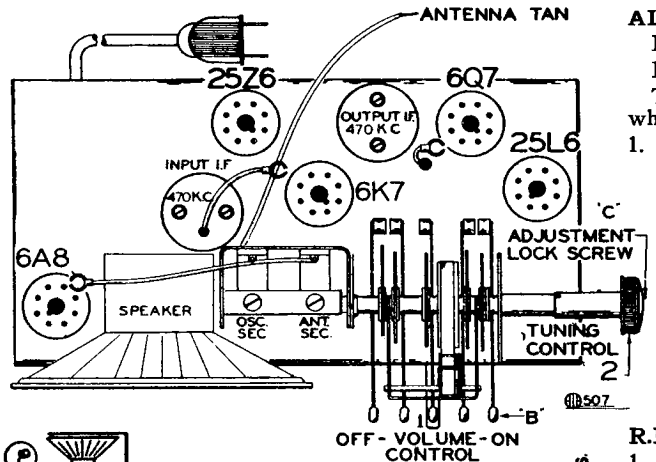

FIG. 1—TOP VIEW

ALIGNING I.F. TRANSFORMERS: (470 K.C.):

Part No. 108-95D Output I.F. Transformer

Part No. 108-117E Input I.F. Transformer

These I.F. transformers have two adjustments, both of which are accessible from the top of chassis (see Fig. 1).

1. With volume control full on (the extreme right of its rotation), and with the variable condenser set to approximately 1400 kilocycles, make the following adjustments:
   (a) Connect external oscillator set at 470 kilocycles, in series with .1 mfd. condenser, to the control grid cap of the type 6K7G tube, and adjust the output I.F. transformer (No. 108-95D) to resonance.
   (b) Move oscillator output clip from grid of 6K7G to grid of 6A8G and adjust input transformer (No. 108-117E) to resonance.
   (c) With oscillator still connected to 6A8G, readjust output I.F. transformer (108-95D) if necessary.

R.F. ALIGNMENT: (530-1720 K.C.)

1. With gang condenser in its minimum capacity position, plates entirely out of mesh, connect an external oscillator in series with a 100 mmf. condenser to the antenna lead and chassis ground and make the following adjustments:
   (a) With external oscillator set at 1720 kilocycles, adjust oscillator trimmer to resonance. This adjustment is on the top of rear section of variable gang condenser. (See Fig. 1).
   (b) Re-set external oscillator to 1400 kilocycles, rotate condenser, pick up oscillator signal and adjust antenna trimmer to resonance. (Top of front section of gang condenser).
   (c) Check sensitivity at 660 and 1000 kilocycles.

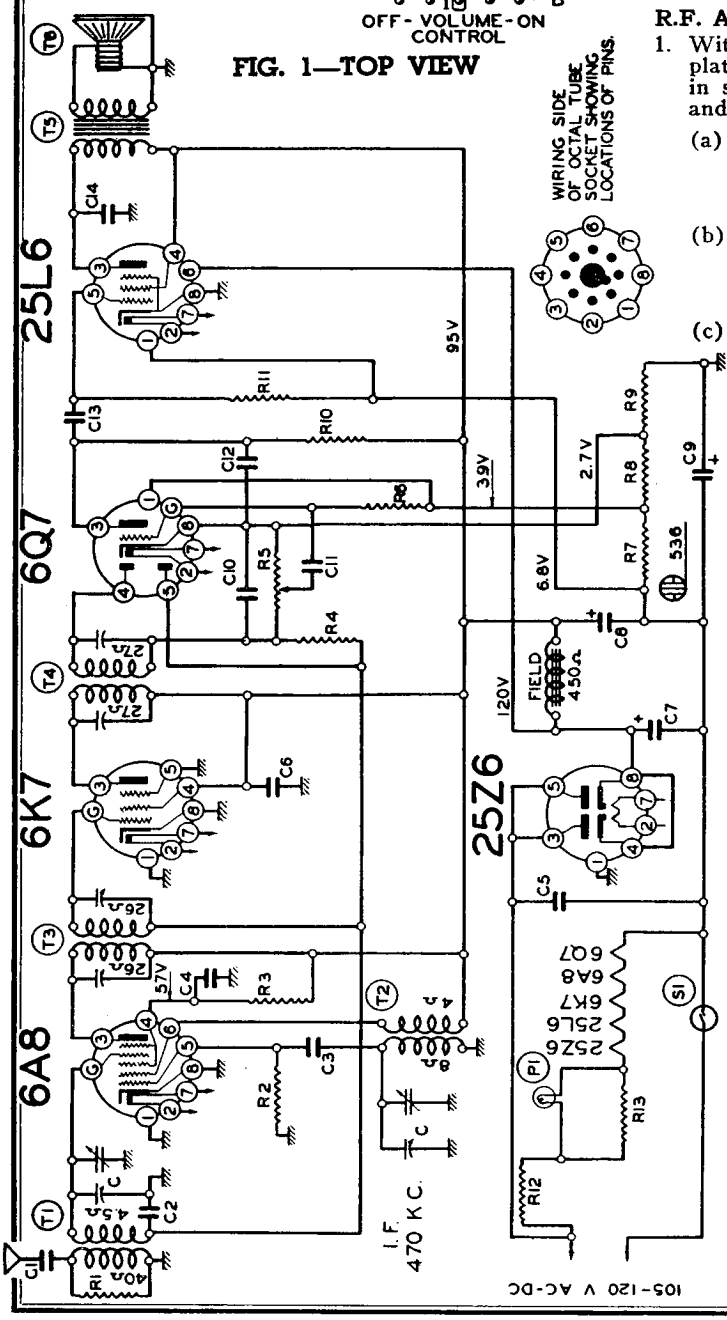

COILS

108117	T3	Input I. F. Coil Assembly Complete with Can
10895D	T4	Output I. F. Coil Assembly Complete with Can
11073	T2	Oscillator Coil Assembly Complete
11192B	T1	Antenna Coil Assembly Complete

SOCKETS

12193		Eight Prong Octal Sockets

SPEAKER

114116B	T6	Five Inch Dynamic Speaker (Field 450 Ohms)
10560	T5	Output Transformer for Speaker

MISCELLANEOUS

101113	R5, S1	Volume Control and Switch (1 megohm)

MODEL 531 SERIES B (No. 187500 and up)

PROCEDURE FOR SETTING AUTOMATIC TUNING LEVERS SAME AS MODEL-526

Part No.	Circuit Diagram Reference	Description
		CONDENSERS
1001	C5	.1 x 400 Volt Tubular Condenser
1009	C2, C4	.05 x 200 Volt Tubular Condenser
10011	C11, C13	.01 x 400 Volt Tubular Condenser
10020	C6	.1 x 200 Volt Tubular Condenser
10067	C14	.025 x 400 Volt Tubular Condenser
11953B	C7, C8, C9	30MFD—30MFD—40MFD Lytic Filter Condenser.
1292	C1	.0005 Mica Type Condenser—20%
1295	C10	.0001 Mica Type Condenser—20%
12912	C3, C12	.00025 Mica Type Condenser—20%
		RESISTORS
10648	R13	55 ohm Metal Clad Resistor
13011	R11	250M Ohm—½ Watt Resistor—20%
13012	R2	50M Ohm—½ Watt Resistor—20%
13019	R6	1 Meg. Ohm—½ Watt Resistor—20%
13021	R1	20M Ohm—½ Watt Resistor—20%
130100	R10	150M Ohm—½ Watt Resistor—20%
130149	R3	15M Ohm—½ Watt Resistor—20%
130170	R4	3 Meg. Ohm—½ Watt Resistor—25%
130174	R7, R9	50 Ohm—½ Watt Resistor—10%
130215	R8	25 Ohm—½ Watt Resistor—10%

Voltages taken from different points of circuit to chassis are measured with volume-control full on, all tubes in their sockets and speaker connected, with a volt meter having a resistance of 1000 ohms per volt.

All voltages as indicated on diagram are measured with 117 volt A.C. or D.C. line.

©John F. Rider, Publisher

Alignment, Parts
Tuner Data

BELMONT RADIO CORP.

MODEL 577 Series A
Schematic, Voltage
Socket, Trimmers

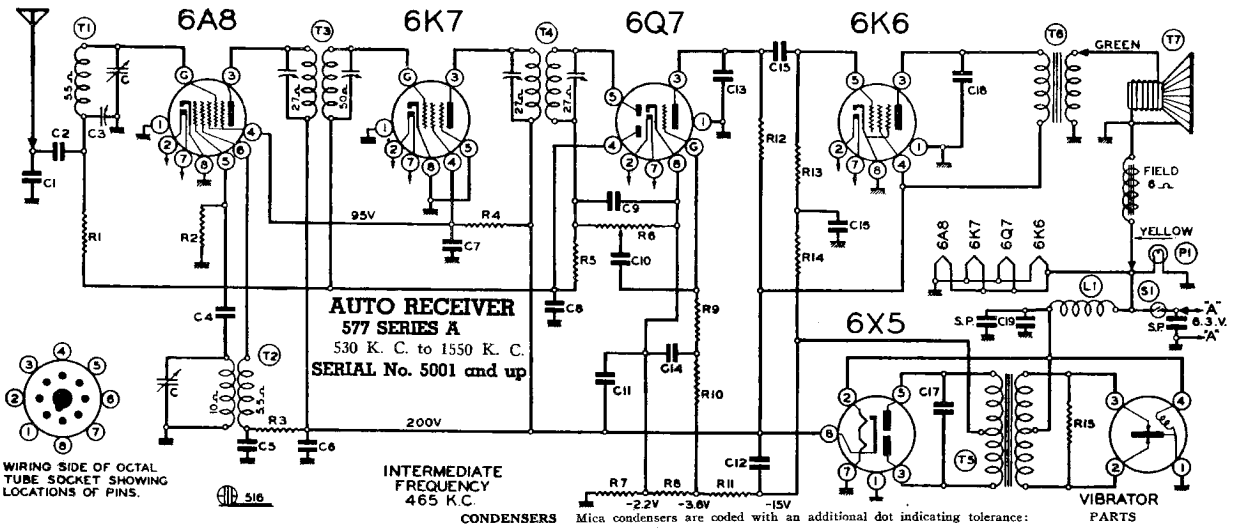

CONDENSERS Mica condensers are coded with an additional dot indicating tolerance:

Color of Dot	Tolerance Percent
White	2½%
Green	5%
Blue	10%
Yellow	15%
Red	20%
None	More than—20%

Code No.	Part No.	Description
		RESISTORS
R1	130-186	250M ohm - 1/10 w. 20%
R2	130-117	50M ohm - 1/10 w. 20%
R3	130-164	30M ohm - ½ w. 20%
R4	130-213	25M ohm - 1 watt 10%
R5	130-126	3 megohm - 1/10 w. 20%
R6	101-110	1 megohm volume control
R7	130-174	50 ohm - ½ w. 10%
R8	130-211	30 ohm - ½ w. 10%
R9	130-209	2 megohm - ½ w. 20%
R10	130-210	1 megohm - ½ w. 20%
R11	130-212	250 ohm - 1 watt 10%
R12	130-186	250M ohm - 1/10 w. 20%
R13	130-186	250M ohm - 1/10 w. 20%
R14	130-186	250M ohm - 1/10 w. 20%
R15	130-84	200 ohm - ½ w. 20%

C	102-69	2 gang variable condenser
C1	129-3	.00002 Mica 20%
C2	100-55	.01 x 400 v. 25%
C3	124-34	Antenna Trimmer
C4	129-12	.00025 Mica 20%
C5	100-20	.1 x 200 v. 25%
C6	100-85	.05 x 400 v. 25%
C7	100-20	.1 x 200 v. 25%
C8	100-9	.05 x 200 v. 25%
C9	129-5	.0001 Mica 20%
C10	100-78	.01 x 200 v. 25%
C11	119-50	8. mfd. lytic
C12	119-50	8. mfd. lytic
C13	129-2	.0005 Mica 20%
C14	100-78	.01 x 200 v. 25%
C15	100-55	.01 x 400 v. 25%
C16	100-19	.006 x 600 v. 25%
C17	100-34	.005 x 1200 v. 10%
C18	100-87	.01 x 600 v. 25%
C19	100-31	.5 x 120 v. 50-10%

C11 and C12 in same unit

T1	111-95	Antenna coil complete
T2	110-76	Oscillator coil complete
T3	108-96D	Input I.F. 465 kc. - complete
T4	108-95C	Output I.F. 465 kc. - complete
T5	104-131	Power Transformer
T6	105-67	Output Transformer
T7	114-114	5" Dynamic Speaker
L1	105-19	"A" Filter Choke
P1	107-97	6.8 v. pilot light
S1		Off-on Switch on Volume Control
SP		Spark Plates

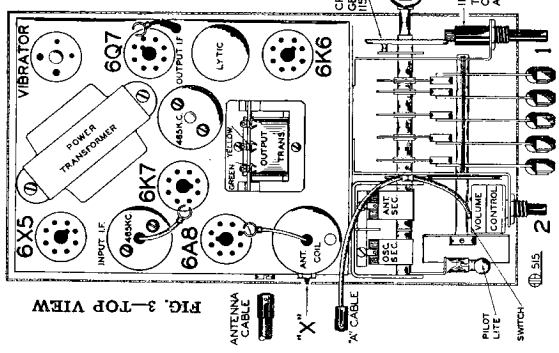

FIG. 3—TOP VIEW

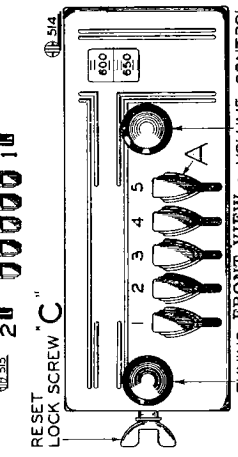

FIG. 2 TUNING FRONT VIEW 1 TUNING CONTROL 2 VOLUME CONTROL & OFF ON SWITCH

Voltages taken from different points of circuit to chassis are measured with volume control full on, all tubes in their sockets and speaker connected, with a volt meter having a resistance of 1000 ohms per volt. These voltages are clearly indicated on the circuit diagram.

In order to prevent signal from acting upon A.V.C. and affecting accuracy of voltage measurements, aerial and ground leads should be short circuited while making measurements.

All voltages are to be measured with 6.3 volts input to receiver. Resistances of coils and transformer windings are indicated in ohms on schematic circuit diagram.

DUMMY ANTENNAS

The dummy antennas referred to in the following instructions are:

"I.F. Dummy" —A .5 mfd. condenser connected in series with the test oscillator output lead.

"Broadcast Dummy"—A 175 mmfd. condenser connected in series with the output lead of the test oscillator.

I.F. ALIGNMENT: (465 K.C.)

1. With variable condenser in its minimum capacity position (plates entirely out of mesh) and with volume control full on, connect test oscillator set at 465 K.C. in series with I.F. dummy antenna, to grid of 6K7 I.F. tube.
2. Adjust trimmer condensers of output I.F. transformer No. 108-95C to resonance with oscillator.
3. Move test oscillator connection to grid of 6A8 tube and adjust trimmer condensers of input I.F. transformer No. 108-96D to resonance with oscillator. There are two adjustments on each and they are accessible from the top of the transformer shield and should be adjusted with an insulated screw driver. (See Fig. 3—top view, page 3.)

BROADCAST ALIGNMENT

1. With variable condenser in its minimum capacity position, connect test oscillator set at 1550 K.C. in series with broadcast dummy to the antenna lead of receiver.
2. Adjust oscillator trimmer of variable condenser to resonance. (This adjustment is the rear section of the two-gang condenser—see top view, Fig. 3).
3. Shift test oscillator to 1400 K.C. and pick up signal by rotating condenser and adjust antenna trimmer (front section of gang condenser) to resonance (see top view, Fig. 3).
4. Re-set test oscillator to 600 K.C. and rotate variable condenser to 600 K.C. Adjust series pad in the antenna circuit for maximum gain. This pad is mounted on the side of the antenna can, adjustment "X."
5. Go back and check 1400 K.C. If adjustment is made here, check 600 K.C. again.
6. Check for sensitivity at 1000 K.C. by setting test oscillator to this frequency and picking up the signal by rotating variable condenser. Under no circumstances bend plates of variable condenser sections to correct tracking.

ADJUST ANTENNA TRIMMER with radio mounted in place

Tune in a weak signal at approximately 600 K.C. with volume control about three-fourths on. Adjust trimmer screw "X" until maximum output is obtained.

PROCEDURE FOR SETTING THE AUTOMATIC LEVERS

There are five levers on the dial by means of which five stations may be selected, (See "A" Fig. 2).

Make a list of local stations you tune in regularly; any number up to and including five.

Any order of grouping can be used, either by assigning call letters for the levers alphabetically or arranging them to correspond with the calibration on the dial scale, namely starting with the lowest frequency station on the right and so on up in frequency to the highest frequency station on the left.

Press DOWN ALL THE WAY any one of the automatic tuner levers. Holding it down FIRMLY, tune in by means of the tuning knob (No. 1) the station you have assigned to this lever. Turn the tuning knob very slowly back and forth (while still holding lever in downward position) until the signal is clearest. The station will then be accurately tuned in. Release the lever.

Press down another automatic tuner lever. Holding it down FIRMLY, carefully tune in the station assigned to this lever. Release this lever.

Follow this procedure until you have selected all of your favorite stations.

Now rotate the tuning knob (No. 1) to the right (clockwise) as far as it will turn, and tighten the special locking screw ("C") located on left side of tuner dial assembly (See Fig. 2).

It is VERY IMPORTANT that this locking screw is turned until it is ABSOLUTELY TIGHT.

This screw will lock in place all the stations you have selected on the automatic tuner levers. (Note: Locking screw "C" is loose when radio is shipped from factory).

If you should desire to change any station you selected to another, loosen the locking screw "C" one or two turns, select the new station as explained. **Be sure to retighten the locking screw**, otherwise the stations you have selected will not stay adjusted to the levers.

©John F. Rider, Publisher

©John F. Rider, Publisher

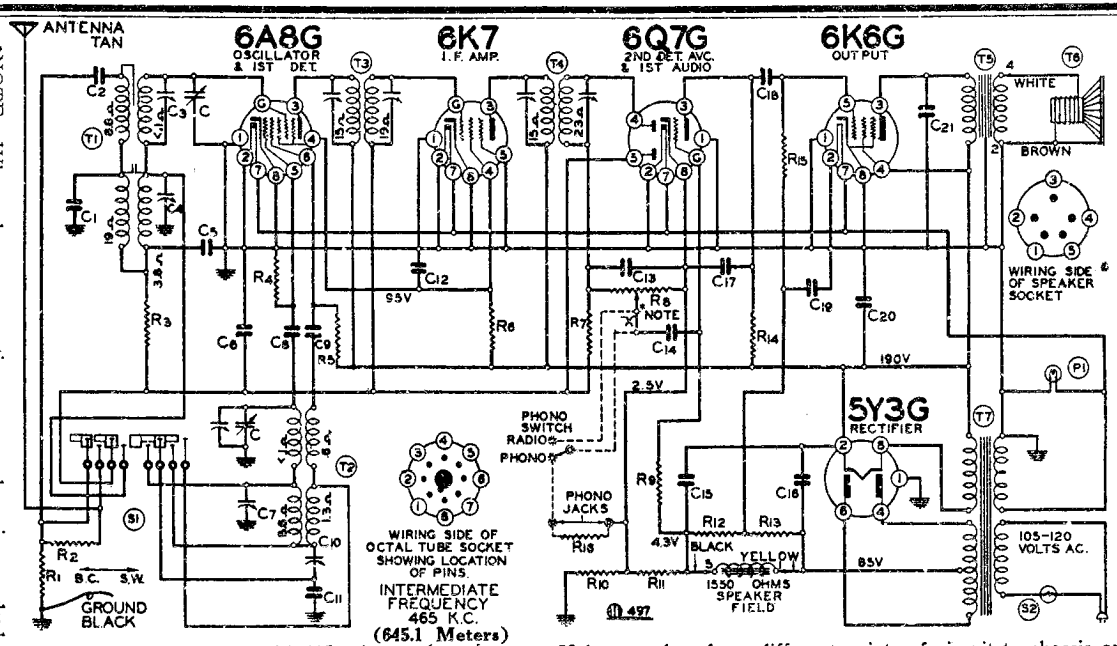

*NOTE.—When phono connections are made, wire marked "X" should be cut and phono connections made as indicated by dotted lines. Resistor R16 and phono jacks should be added.

All voltages are to be measured with 115 volts on the primary of the power transformer.

Voltages taken from different points of circuit to chassis are measured with volume control full on, all tubes in their sockets and speaker connected, with a volt meter having a resistance of 1000 ohms per volt. These voltages are clearly indicated on the circuit diagram.

FREQUENCY RANGE 535 to 1720 K.C. (Kilocycles)
5.45 to 18.3 M.C. (Megacycles)

2-Band A. C. Superheterodyne Receiver

CHASSIS MODEL 583 SERIES "A" (Serial No. 8A977900 and up)

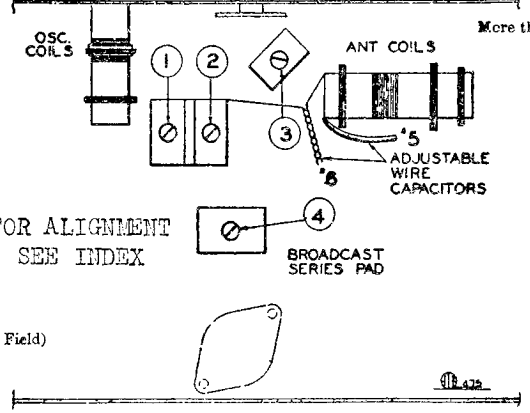

FIG. 3.—BOTTOM VIEW SHOWING TRIMMERS

POWER SUPPLY:

Receivers of this model which are to be used on voltages or frequencies other than 110-130-230 volts, 40-60 cycles are so marked. (Standard chassis is equipped with regular 105-115 volt 50/60 cycle Power Transformer). The power consumption of this receiver is 55 watts. (See taps on top of power transformer.)

110 Tap: For line voltages of 100 to 125 volts.
130 Tap: For line voltages of 125 to 145 volts.
230 Tap: For line voltages of 210 to 250 volts.

To remove the chassis from the cabinet, remove the four bolts which are used to fasten the chassis to the cabinet bottom; remove the special locking screw in the center of the tuning knob on the side of the cabinet; pull the knobs off their shafts and pull off the six button lever keys on front of dial.

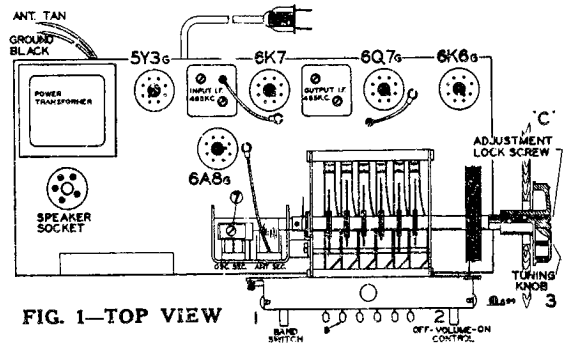

FIG. 1—TOP VIEW

Mica condensers are coded with an additional dot indicating tolerance:

Tolerance Percent	Color of Dot
2½%	White
5%	Green
10%	Blue
15%	Yellow
20%	Red
More than 20%	None.

PROCEDURE FOR SETTING THE AUTOMATIC TUNER LEVERS
See Model 582

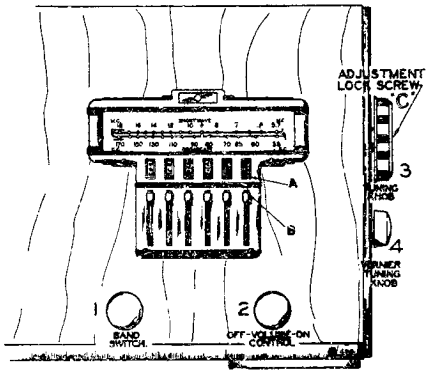

FIG. 2—FRONT VIEW

Code No.	Part No.	Description
		RESISTORS
R1	130-36	10M ohm - 1/3 w. 20%
R2	130-41	800 ohm - 1/3 w. 20%
R3	130-20	100M ohm - 1/3 w. 20%
R4	130-12	50M ohm - 1/3 w. 20%
R5	130-36	10M ohm - 1/3 w. 20%
R6	130-42	20M ohm - 1/2 w. 20%
R7	130-4	3 megohm - 1/3 w. 20%
R8	101-100	1 megohm volume control
R9	130-4	3 megohm - 1/3 w. 20%
R10	130-204	55 ohm - 1/3 w. 10%
R11	130-203	40 ohm - 1/3 w. 10%
R12	130-205	100M ohm - 1/3 w. 10%
R13	130-46	800M ohm - 1/3 w. 10%
R14	130-9	200M ohm - 1/3 w. 20%
R15	130-102	500M ohm - 1/3 w. 10%
R16	130-57	35M ohm - 1/3 w. 20% (For Phono Connection)
		CONDENSERS
C	102-68	2 gang variable condenser
C1	129-49	.00009 mica 5%
C2	129-87	.000105 mica 10%
C3	124-39C	2-25 mmf. Adj. Cond.
C4	124-30B	2-20 mmf. Adj. Cond.
C5	100-37	.003 x 600 v. 10%
C6	100-22	.05 x 200 v. 25%
C7	124-30B	2-20 mmf. Adj. Cond.
C8	129-39	.00005 mica 20%
C9	100-25	.002 x 600 v. 25%
C10	124-36	350 mmf. w. capacity - Series pad
C11	129-93	.00348 - 2-1/2% Comp. Type
C12	100-24	.25 x 400 v. 25%
C13	129-5	.0001 Mica 20%
C14	100-11	.01 x 400 v. 25%
C15	119-48	8.0 mfd. 350 w.v. lytic
C16	119-48	4.0 mfd. 350 w.v. lytic
C17	129-2	.0005 mica 20%
C18	100-16	.01 x 400 v. 10%
C19	100-4	.1 x 200 v. 10%
C20	100-13	.05 x 400 v. 25%
C21	100-19	.006 x 600 v. 25%
		C4 and C7 in same unit
		C15 and C16 in same unit
		PARTS
T1	111-93	Antenna coil complete
T2	110-74	Oscillator coil complete
T3	108-111B	Input I.F. Complete 465 kc.
T4	108-112F	Output I.F. Complete 465 kc.
T5	105-57	Output Transformer
T6	114-110	6" Dynamic Speaker (1550 Ohm Field)
T7	104-124	Power Transformer
	104-127	Power Transformer - Universal
S1	125-46	Band Switch
S2		Off-on switch on volume control
P1	107-94	Pilot Light

© John F. Rider, Publisher

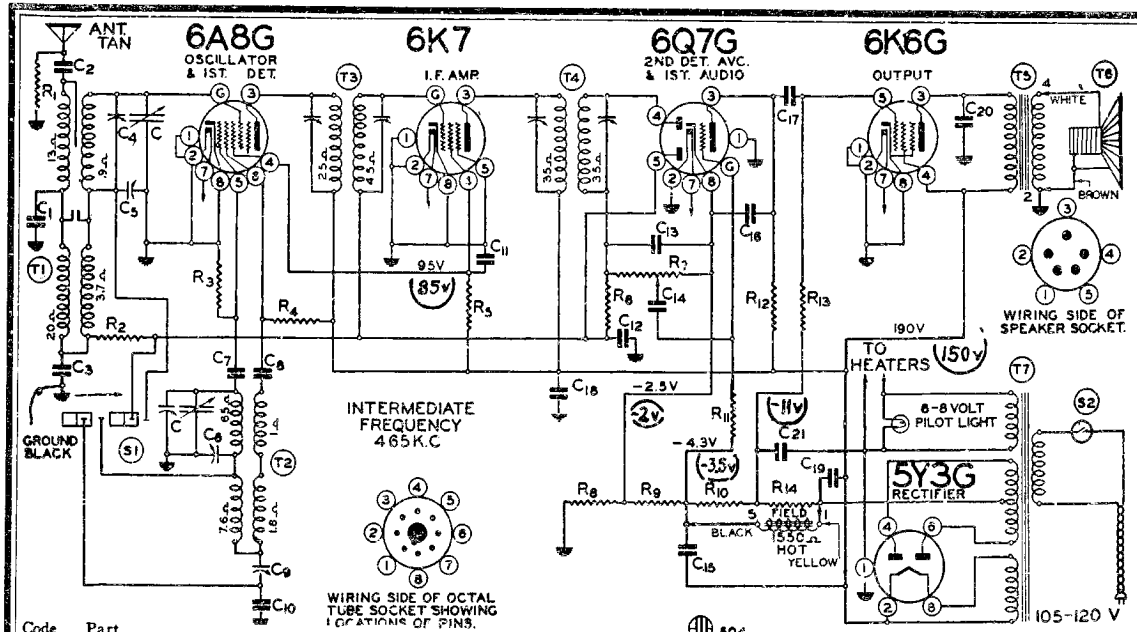

Voltages in Circles are for Series "A"

Code No.	Part No.	Description
		RESISTORS
R1	130-17	10M ohm - 1/3 w. 20%
R2	130-20	100M ohm - 1/3 w. 20%
R3	130-12	50M ohm - 1/3 w. 20%
R4	130-17	10M ohm - 1/3 w. 20%
R5	130-42	20M ohm - ½ w. 20%
R6	130-4	3 megohm - 1/3 w. 20%
R7	101-100	1 megohm - Volume Control
R8	130-204	55 ohm - 1/3 w. 10%
R9	130-203	40 ohm - 1/3 w. 10%
R10	130-205	100M ohm - ⅙ w. 10%
R11	130-4	3 megohm - 1/3 w. 20%
R12	130-9	200M ohm - 1/3 w. 20%
R13	130-102	500M ohm - 1/3 w. 10%
R14	130-46	800M ohm - 1/3 w. 10%
		CONDENSERS
C	102-63	2 Gang Variable
C1	129-86	.000038 Mica 5%
C2	129-87	.000105 Mica 10%
C3	100-77	.00304 x 600 v. 5%
C4	124-39C	2-25 mmf. Adjustable Condenser
C5	124-30B	2-20 mmf. Dual Adjustable Condenser
C6	124-30B	2-20 mmf. Dual Adjustable Condenser
C7	129-5	.0001 Mica 20%
C8	100-12	.003 x 600 25%
C9	124-44	450 wkg. cap. - Series pad
C10	129-85	.0014 - 2½% Mica
C11	100-79	.25 x 400 v. 50 - 10%
C12	100-9	.05 x 200 v. 25%
C13	129-5	.0001 Mica 20%
C14	100-11	.01 x 400 v. 25%
C15	119-48	8 mfd. x 350 w. v. lytic
C16	129-2	.0005 Mica 20%
C17	100-16	.01 x 400 v. 10%
C18	100-13	.05 - 400 v. 25%
C19	119-48	4 mfd. x 350 w. v. lytic
C20	100-19	.006 x 600 v. 25%
C21	100-4	.1 x 200 v. 10%
		C5 and C6 in same unit
		C15 and C19 in same unit
		PARTS
T1	111-89	Antenna Coil Complete
T2	110-71	Oscillator Coil Complete
T3	108-105E	Input I.F. 465 kc. Complete
T4	108-106F	Output I.F. 465 kc. Complete
T5	105-57	Output Transformer
T6	114-110	6" Dynamic speaker (1550 Ohm Field)
T7	104-124	Power Transformer
S1	125-43	Wave band switch
S2		Switch on volume control

Voltages taken from different points of circuit to chassis are measured with volume control full on, all tubes in their sockets and speaker connected, with a volt meter having a resistance of 1000 ohms per volt. These voltages are clearly indicated on the circuit diagram.

All voltages are to be measured with 115 volts on the primary of the power transformer.

MODEL 582

535 to 1720 K.C.

2000 to 7000 K.C.

Mica condensers are coded with an additional dot indicating tolerance:

Tolerance percent	Color of Dot
2½%	White
5%	Green
10%	Blue
15%	Yellow
20%	Red
More Than 20%	None

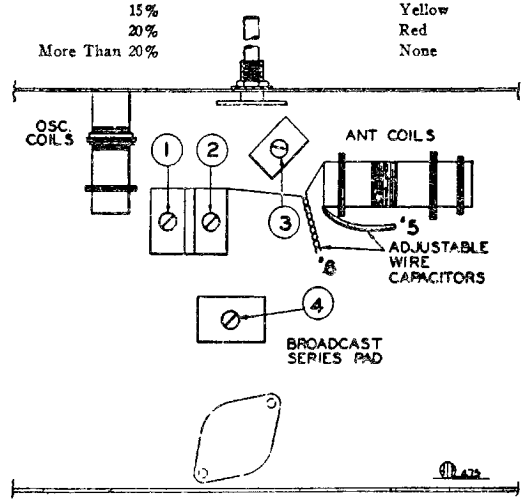

FIG. 3.—BOTTOM VIEW SHOWING TRIMMERS

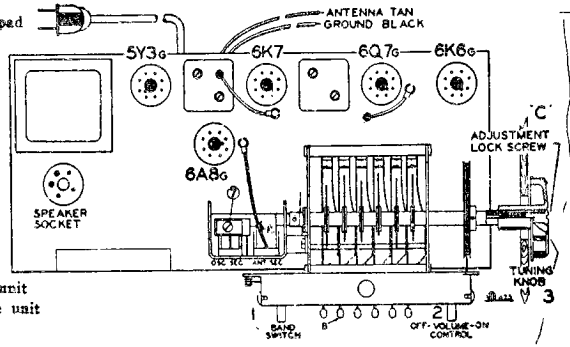

FIG. 1—TOP VIEW

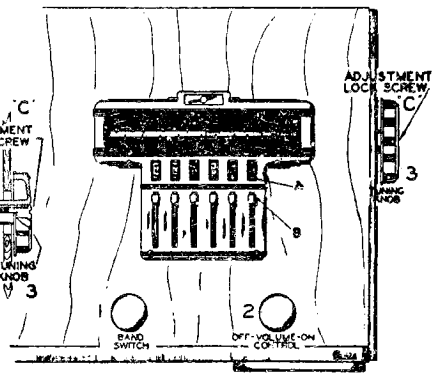

FIG. 2—FRONT VIEW

SERIES "A" (Serial No. 7L894500 and up)

R5	130-149	15M ohm - 1/3 w. 20%
R8	106-45	65 ohm 10%
R9	106-45	45 ohm 10%
R10	106-45	220 ohm 10%

R_{14} Grid Bias Res. NOT USED

C15	119-47	5.0 mfd. 250 w. v. lytic
C19	119-47	5.0 mfd. 250 w. v. lytic
C20	100-12	.003 x 600 v. 25%

C_{21} Bias-Filter Cond. NOT USED

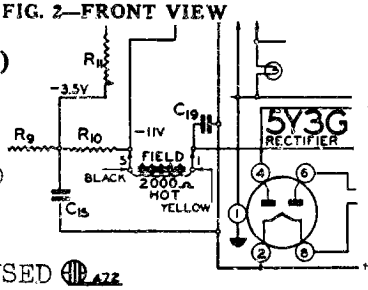

MODEL 582,Series A,B
Tuner,Alignment,Note

BELMONT RADIO CORP.

MODEL 582 SERIES "A" (Serial No. 7L894500 and up)
SERIES "B" (Serial No. 8B106200 and up)

PROCEDURE FOR SETTING THE AUTOMATIC TUNER LEVERS:

There are six levers on the dial by means of which six stations may be selected, (See "B", Fig. 2).

Make a list of local stations you tune in regularly; any number up to and including 6.

Punch out from the set of station call letter tabs supplied, the call letters of the stations you have selected.

Above each automatic tuner lever an opening in the escutcheon is provided for inserting the call letter tabs, (See "A" Fig. 2). Any order of grouping can be used, either by arranging the call letters alphabetically or grouping them to correspond with the calibration on the dial scale, namely starting with the lowest frequency station on the right and so on up in frequency to the highest frequency station on the left.

Insert the call letter tabs in the rectangular openings in the escutcheon above each of the automatic tuner levers. One of the small celluloid tabs supplied should be snapped into place over each of the station call letter tabs.

Press down any one of the automatic tuner levers. Hold it down, and by means of the tuning knob No. 3, tune in very carefully the station you have selected for this lever. Turn the tuning knob very slowly back and forth until the signal is clearest. The station will then be accurately tuned in.

Release the lever and press down another automatic tuner lever. Hold it down and carefully tune-in the station indicated on the station call letter tab above this lever.

Follow this procedure until you have selected all of your favorite stations. Hold tuning knob securely with left hand to prevent it from turning and with a coin (half dollar), tighten the special locking screw ("C") in the center of the tuning knob, (See Fig. 1).

This screw will lock in place all the stations you have selected on the automatic tuner levers. (Note: Locking screw "C" is loose when radio is shipped from factory).

If you should desire to change any station you selected to another, hold the tuning knob No. 3 securely and with a coin loosen the locking screw "C" one or two turns; select the new station as explained. **Be sure to retighten the locking screw,** otherwise the stations you have selected will not stay adjusted to the levers.

To remove the chassis from the cabinet, remove the four bolts which are used to fasten the chassis to the cabinet bottom; remove the special locking screw in the center of the tuning knob on the side of the cabinet; pull the knobs off their shafts and pull off the six button lever keys on front of dial.

DUMMY ANTENNAS:

The following dummy antennas are used in aligning and are referred to in the following alignment instructions as "Dummy 1", "Dummy 2", and "Dummy 3".

Dummy 1: (I.F.)—Consists of a .1 mfd. condenser connected in series with the external oscillator.

Dummy 2: (Broadcast)—Consists of a 200 mmfd. condenser and a 20 ohm resistor connected in series with each other and in series with the external oscillator.

Dummy 3: (Short Wave)—Consists of a .1 mfd. condenser and a 400 ohm resistor connected in series with each other and in series with the external oscillator.

ALIGNING I.F. TRANSFORMERS: (465 K.C.):

Part No. 108-106F Output I.F. Transformer
Part No. 108-105E Input I.F. Transformer

These I.F. transformers have two adjustments, both of which are accessible from the top of chassis (see top view).

1. With volume control full on, (the extreme right of its rotation), the band changing switch in the broadcast position, (extreme left of its rotation), and with variable condenser in its minimum capacity position, plates entirely out of mesh, make the following adjustments:
   (a) Connect external oscillator set at 465 kilocycles, in series with "Dummy 1", to the control grid cap of the type 6K7 tube, and adjust the output I.F. transformer (No. 108-106F) to resonance.
   (b) With "Dummy 1" still connected, move oscillator output clip from grid of 6K7 to grid cap of 6A8G and adjust input I.F. transformer (No. 108-105E) to resonance.

SHORT WAVE BAND ALIGNMENT:
2000 to 7000 Kilocycles

1. With band changing switch in the short wave position, extreme right of its rotation, and with external oscillator set at 6 megacycles and connected in series with "Dummy 3" to the antenna and ground leads, make the following adjustments:
   (a) Move dial pointer to 6 megacycles and adjust short wave oscillator trimmer to resonance.
   This adjustment is the trimmer mounted on the top of rear section of the variable gang condenser (see Fig. 1, top view, adjustment number 7).
   (b) Adjust short wave antenna trimmer (Adjustment Number 3), to resonance (see Fig. 3, bottom view).

BROADCAST BAND ALIGNMENT:
535 to 1720 Kilocycles

1. With band changing switch in the broadcast position, extreme left of its rotation, and with gang condenser in its minimum capacity position, plates entirely out of mesh, and with external oscillator connected in series with "Dummy 2" to antenna and ground leads make following adjustments:
   (a) Set external oscillator to 1720 K.C. and adjust broadcast oscillator trimmer to resonance. (Adjustment number 1, see bottom view of chassis, Fig. 3).
   (b) Re-set external oscillator to 1400 K.C., rotate variable gang condenser and pick up signal. Adjust broadcast antenna trimmer (adjustment number 2), to resonance.
   (c) Re-set external oscillator to 600 K.C., and adjust broadcast series pad (adjustment number 4), to resonance by rotating condenser to approximately 600 K.C., rocking it slowly to and fro until by adjusting series pad maximum output is attained. This adjustment is located on the bottom of the chassis directly under the variable gang condenser. (See bottom view of chassis, Fig. 3).
   (d) Repeat adjustments "a" and "c" until sensitivity is at its maximum.
   (e) Set external oscillator to 1890 K.C. (Image of 960 K. C.) and tune in the signal at 960 K.C. on the dial. Adjust the wire capacitor, (Adjustment number 6) by twisting the two wires until a **Minimum** output is obtained on output meter.
   (f) Set external oscillator to 2030 K.C. (Image of 1700 K.C.) and tune in the signal at 1700 K.C. on the dial. Adjust the wire capacitor (Adjustment number 5), by moving the wire either toward or away from the coil winding until a **Minimum** output is obtained on output meter.
   (g) Repeat adjustments (e) and (f) until the sensitivity is **at a Minimum.**
   (h) Recheck the broadcast antenna trimmer (Adjustment number 2).
   (i) Recheck the short wave antenna trimmer (Adjustment number 3).

Series"A" receivers(Serial Numbers 7L894500 and up) have several differences from Series"B"(Serial Numbers 8B106200 and up). These are shown on the schematic page with a portion of the schematic.

©John F. Rider, Publisher

©John F. Rider, Publisher

BELMONT RADIO CORP.

MODEL 611 Series A Schematic, Socket Trimmers, Parts

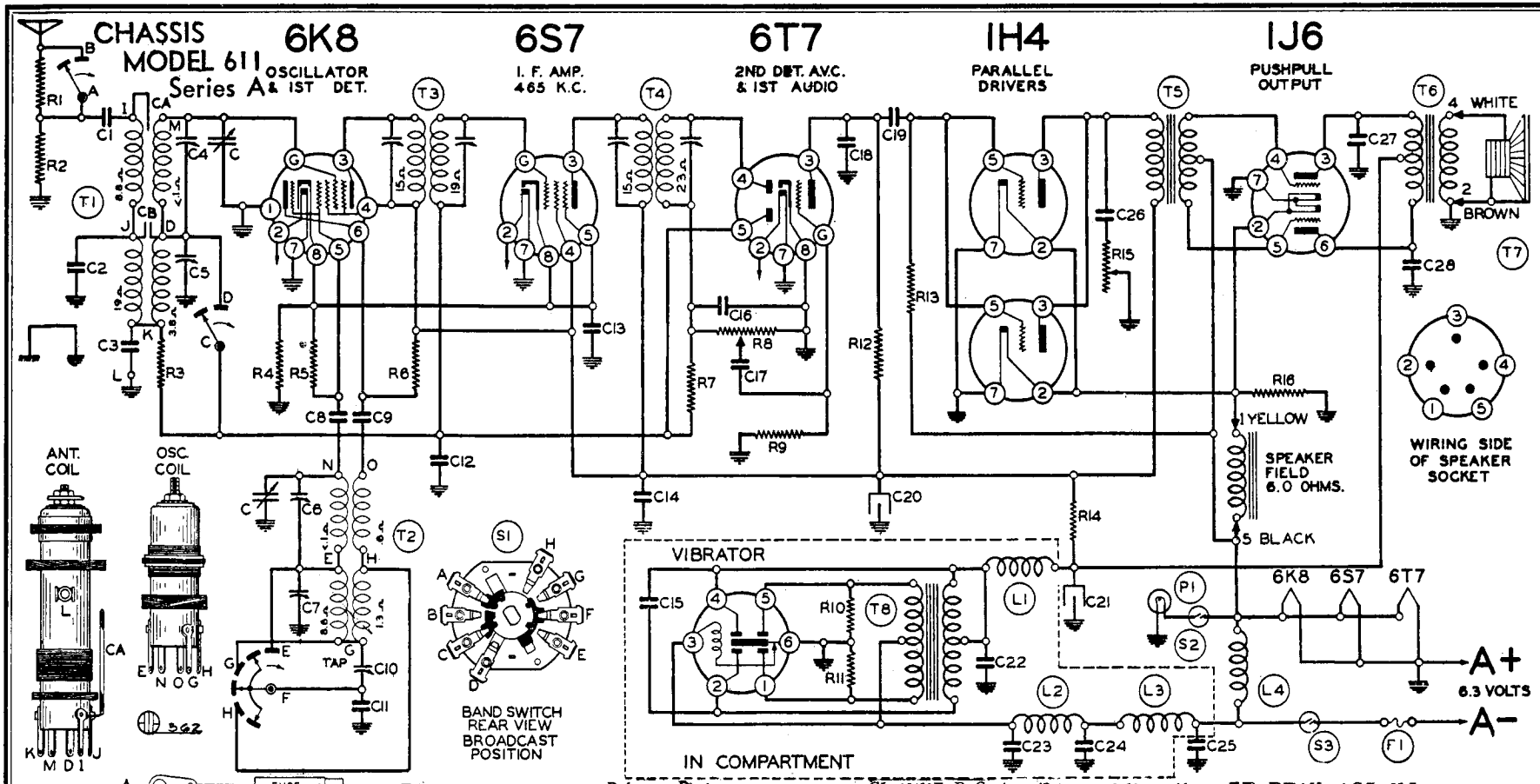

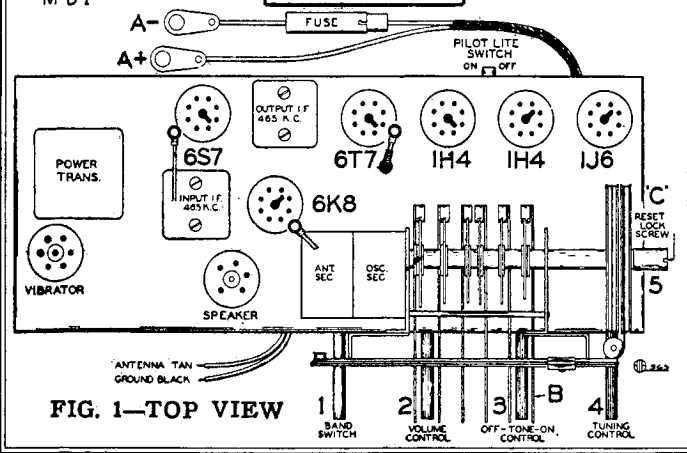

FIG. 1—TOP VIEW

Reference	Part No.	Description
R1	13041	800 ohm—½ w.
R2	13017	10M ohm—½ w.
R3	13020	100M ohm—½ w.
R4	13097	200 ohm—½ w.
R5	13012	50M ohm—½ w.
R6	130149	15M ohm—½ w.
R7	1304	3 megohm—½ w.
R8	101121	1 megohm—volume contr
R9	130225	15 megohm—½ w.
R10	13056	100 ohm—½ w.
R11	13056	100 ohm—½ w.
R12	1309	200M ohm—½ w.
R13	13019	1 megohm—½ w.
R14	130224	3000 ohm—½ w.
R15	101120	250M ohm—tone control
R16	130226	8 ohm—1 watt
CA		Adj. Capacitor
CB		Adj. Capacitor
C	10274	2 gang variable cond
C1	12987	.000105 Mica
C2	12949	.00009 Mica
C3	10037	.003 x 600 v.
C4	12439C	Sw. Ant. Trimmer 2-25 mmfd
C5	12430E	B. C. Ant. Trimmer 1-10 mmfd.
C6	12439	S. W. Osc. Trimmer 2-25 mmfd.
C7	12430E	B. C. Osc. Trimmer 1-10 mmfd.
C8	12939	.00005 Mica
C9	10025	.002 x 600 v.
C10	12451	350 mmfd. w. c. Series Pad
C11	12993	.00348 Mica
C12	10022	.05 x 200 v.
C13	10017	.5 x 120 v.
C14	10020	.1 x 200 v.
C15	10068	.003 x 1400 v.
C16	12912	.00025 Mica
C17	10078	.01 x 200 v.
C18	1292	.0005 Mica
C19	10078	.01 x 200 v.
C20	11959	30 mfd.—250 w. v. lytic
C21	11959	10 mfd.—250 w. v. lytic
C22	10020	.1 x 200 v.
C23	10031	.5 x 120 v.
C24	10031	.5 x 120 v.
C25	12921	.0002 Mica
C26	10026	.02 x 400 v.
C27	10025	.002 x 600 v.
C28	10025	.002 x 600 v.

C20 and C21 in same unit. C5 and C7 in same unit.

T1	11193B	S. W. B. C. Antenna coil complete
T2	11074B	S. W. B. C. oscillator coil complete
T3	108111C	Input I. F.—465 kc. complete
T4	108112B	Output I. F. 465 kc. complete
T5	10572	Audio Transformer
T6	10571	Output Transformer
T7	114119	6" Speaker (Dynamic) (Field Resistance 6 ohms)
T8	104137	Power Transformer
L1	10535	R. F. "B" Choke
L2	10519	"A" Choke
L3	10519	"A" Choke
L4	10519	"A" Choke
S1	12554	Band Switch
S2	12514	Pilot Light Switch
S3		Off-On Switch on Tone Control
P1	10789	6.3 v. Pilot Light—T-40
F1	13179	4 Amp. Fuse

MODEL 611 Series A
Voltage, Alignment
Tuner, Notes

BELMONT RADIO CORP.

FIG. 2—FRONT VIEW

TUBES: SERVICE DATA

The tube complement of this chassis consists of the following octal base glass and metal tubes:

The type and function of each tube is as follows:

1—Type 6K8 Triode Hexode, First Detector-oscillator.

1—Type 6S7G Remote Cut-Off Pentode, I. F. Amplifier (465 K. C.)

1—Type 6T7G Duplex Diode Triode Second Detector, A. V. C. and First Audio.

2—Type 1H4G Triode Parallel Drivers.

1—Type 1J6G Push-Pull Class B Output Amplifier.

SERVICE NOTES:

Voltage taken from different points of circuit to chassis are measured with volume control full on, all tubes in their sockets and speaker connected, with a volt meter having a resistance of 1000 ohms per volt.

All voltages are to be measured with 6.3 volts input to receiver.

Resistances of coils and transformer windings are indicated in ohms on schematic circuit diagram.

To check for open by-pass condensers, shunt each condenser with another condenser of the same capacity and voltage rating, which is known to be good, until the defective unit is located.

Failure to operate, noisy or weak reception is usually due to defective tubes, the tubes making poor contact with sockets or grid clips making poor contact with the caps of the tubes. Tubes may be checked very easily by replacing with other tubes which are known to be good. If fuse blows out frequently and insulating sleeve has been properly placed over fuse, the trouble is probably in the vibrator, it should be replaced. Do not attempt to make any adjustments on the vibrators.

Excessive hum, stuttering, low volume and a reduction in all D. C. voltages is usually caused by a shorted electrolytic condenser; open by-pass condensers frequently cause oscillation and distorted tone.

ALIGNING INSTRUCTIONS:

CAUTION:—No aligning adjustments should be attempted without first thoroughly checking over all other possible causes of trouble, such as poor installations, open or grounded antenna systems, low battery voltage, defective tubes, condensers and resistors. In order to properly align this chassis, an oscillator (generator) is absolutely necessary. No aligning adjustments should be attempted with the chassis in the cabinet.

PROCEDURE FOR SETTING THE AUTOMATIC TUNER LEVERS:

There are six levers on the dial by means of which six stations may be selected, (See "B", Fig. 2).

Make up a list of local stations you tune in regularly; any number up to and including 6.

Punch out from the set of station call letter tabs supplied, the call letters of the stations you have selected.

Above each automatic tuner lever an opening in the escutcheon is provided for inserting the call letter tabs, (See "A" Fig. 2). Any order of grouping can be used, either by arranging the call letters alphabetically or grouping them to correspond with the calibration on the dial scale, namely starting with the lowest frequency station on the right and so on up in frequency to the highest frequency station on the left.

Insert the call letter tabs in the rectangular openings in the escutcheon above each of the automatic tuner levers. One of the small celluloid tabs supplied should be snapped into place over each of the station call letter tabs.

Press DOWN ALL THE WAY any one of the automatic tuner levers. Holding it down FIRMLY, tune in by means of the tuning knob (No. 4) the station indicated on the station call letter tab above this lever. Turn the tuning knob very slowly back and forth (while still holding lever in downward position) until the signal is clearest. The station will then be accurately tuned in. Release the lever.

Press down another automatic tuner lever. Holding it down FIRMLY, carefully tune in the station indicated on the call letter tab above this lever. Release this lever.

Follow this procedure until you have selected all of your favorite stations.

Rotate the tuning knob (No. 4) to the right (clockwise) as far as it will turn. Now remove from the right side of the cabinet the metal button, and, with a screw driver inserted through the hole, tighten the reset locking adjustment screw "C" "5," (See Fig. 1). It is VERY IMPORTANT that this screw is turned until it is ABSOLUTELY TIGHT.

This screw will lock in place all the stations you have selected on the levers. (Note: Reset Lock Screw "C," "5" is loose when radio is shipped from factory).

If you should desire to change any station you selected to another, loosen the reset locking screw "C" "5" four or five complete turns; select the new station as explained. (Note: If the dial mechanism works hard when setting up a new station for one of the automatic tuner levers, it is due to the locking screw being too tight. Loosen the reset locking screw "C," "5" until the dial mechanism works freely with the tuner lever pressed down).

BE SURE TO RETIGHTEN THE RESET LOCK SCREW, otherwise the stations will not stay adjusted to the levers.

The automatic dial is now set up for quick tuning. Press down on the lever and—your favorite station is selected.

BAND	DIAL SCALE	FREQUENCY RANGE
Broadcast	Lower	535 to 1720 K.C. (Kilocycles)
Short Wave	Upper	5.45 to 18.3 M.C. (Megacycles)

ALIGNMENT PROCEDURE

The following equipment is required for aligning:

- An all wave signal generator which will provide an accurately calibrated signal at the test frequencies as listed.
- Output indicating meter.
- Non-metallic screwdriver.
- Dummy antennas—1 mf., 200 mmf., and 400 ohms.

BAND	Frequency Setting	SIGNAL GENERATOR Dummy Antenna	SIGNAL GENERATOR Connection to Radio	Position of Band Switch	Variable Condenser Setting	Trimmers Adjusted (in Order Shown)	Trimmer Function	Adjustment
I. F.	465 Kc.	.1 MFD.	Grid of 6S7	Broadcast (Extreme left rotation)	Rotor full open (Plates out of mesh)	Two trimmers on top (See Fig. 1)	Output I. F.	Adjust to maximum output
	465 Kc.	.1 MFD.	Grid of 6K8	Broadcast (Extreme left rotation)	Rotor full open (Plates out of mesh)	Two trimmers on top (See Fig. 1)	Input I. F.	Adjust to maximum output
SHORT WAVE BAND	16 Mc.	400 ohms	Antenna lead	Short Wave (Extreme right rotation)	Set dial at 16 MC	Trimmer (C6) (See Fig. 3)	Short wave Oscillator	Adjust to maximum output
	16 Mc.	400 ohms	Antenna lead	Short Wave (Extreme right rotation)	Dial set at 16 MC	Trimmer (C4) (See Fig. 3)	Short wave Antenna	Adjust to maximum output
BROADCAST BAND	1720 Kc.	200 mmf.	Antenna lead	Broadcast (Extreme left rotation)	Rotor full open (Plates out of mesh)	Trimmer (C7) (See Fig. 3)	Broadcast Oscillator	Adjust to maximum output
	1400 Kc.	200 mmf.	Antenna lead	Broadcast (Extreme left rotation)	Set dial at 1400 Kc.	Trimmer (C5) (See Fig. 3)	Broadcast Antenna	Adjust to maximum output
	600 Kc.	200 mmf.	Antenna lead	Broadcast (Extreme left rotation)	Set dial at 600 Kc.	Trimmer (C10) (See Fig. 3)	Broadcast oscillator series pad	Adjust to maximum (See note "A")
IMAGE REJECTION ADJUSTMENTS	2100 Kc.	200 mmf.	Antenna lead	Broadcast (Extreme left rotation)	Pick up signal at 1125 Kc. on dial	Wire capacitor (CB) (See circuit diagram)	Image rejection	Adjust by twisting for minimum output. (See note "B")
	2630 Kc.	200 mmf.	Antenna lead	Broadcast (Extreme left rotation)	Pick up signal at 1700 Kc. on Dial	Wire capacitor (CA) (See circuit diagram)	Image rejection	Adjust by moving for minimum output. (See note "C")

NOTE "A" Turn the dial back and forth slightly (rock) and adjust trimmer until the peak of greatest intensity is obtained.

NOTE "B" 1720KC is the image frequency of 2100KC. Adjust wire capacity (CB) by twisting the two wires until a **minimum** output is obtained.

NOTE "C" 1700KC is the image frequency of 2630KC. Adjust wire capacity (CA) by moving the wire either toward or away from the antenna coil winding until a **minimum** output is obtained on the output meter.

- Attenuate the signal from the signal generator to prevent the leveling-off action of the AVC.
- After each band is completed, repeat the procedure as a final check.

BAND SWITCH	BAND	FREQUENCY RANGE
Extreme Right Rotation	Short Wave	5.45 to 18.3 MC.
Extreme Left Rotation	Broadcast	535 to 1720 KC.

Power Consumption ..... 2.4 Amperes at 6.3 Volts
Power Output ..... 1.2 Watts Undistorted, 2.5 Watts Maximum
Intermediate Frequency ..... 465 KC.

©John F. Rider, Publisher

BELMONT RADIO CORP.

MODEL 632 Series A
Schematic, Voltage
Parts

Power Consumption	55 Watts
Power Output	1.25 Watts Undistorted, 2.25 Watts Maximum
Intermediate Frequency	470 K.C.

FREQUENCY RANGE

530 to 1720 K.C.
530 to 1720 K.C.

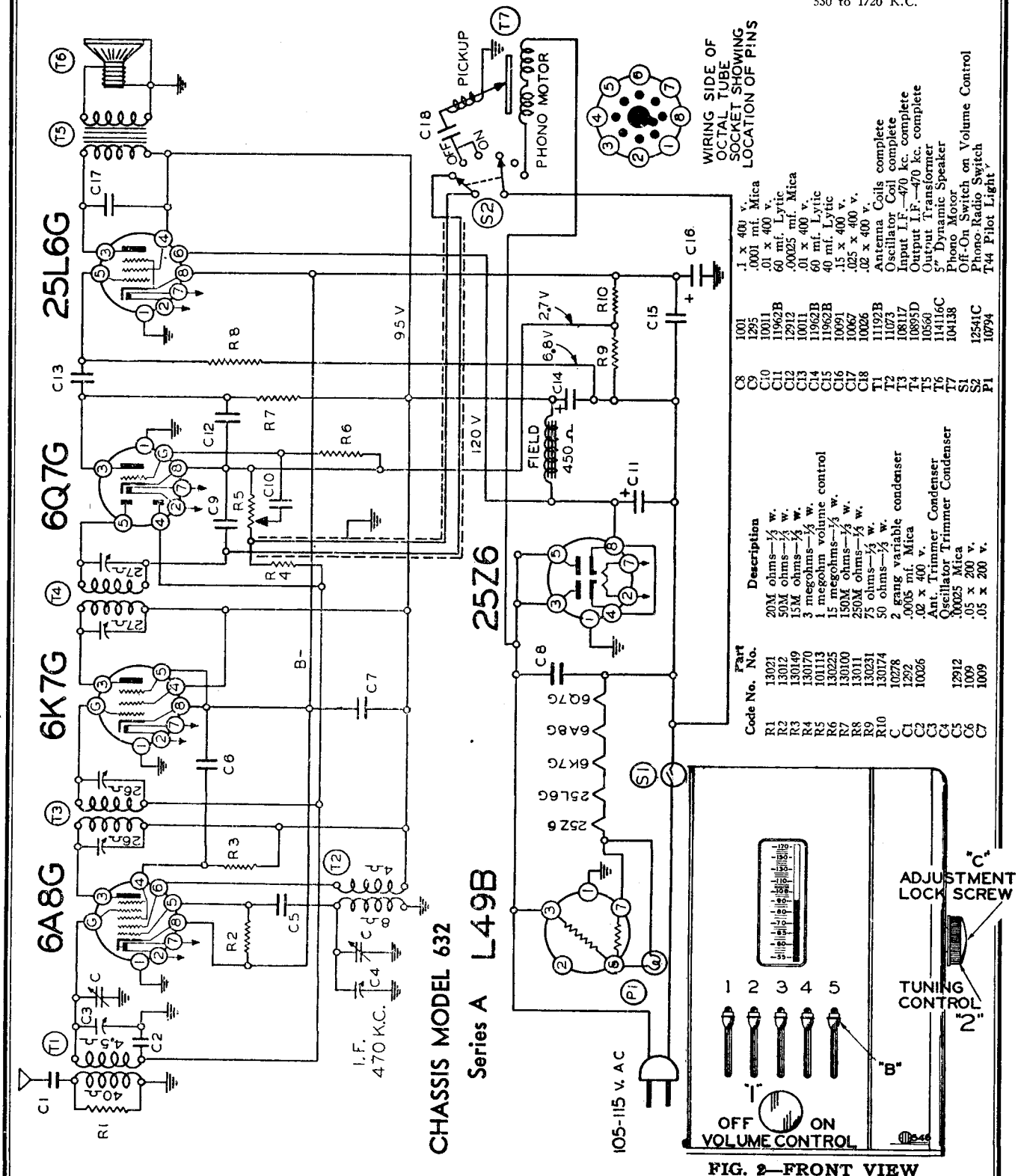

FIG. 2—FRONT VIEW

Code No.	Part No.	Description
R1	13021	20M ohms—½ w.
R2	13012	50M ohms—½ w.
R3	130149	15M ohms—½ w.
R4	130170	3 megohms—⅓ w.
R5	101113	1 megohm volume control
R6	130225	15 megohms—½ w.
R7	130100	150M ohms—½ w.
R8	13011	250M ohms—½ w.
R9	130231	75 ohms—⅓ w.
R10	130174	50 ohms—⅓ w.
C	10278	2 gang variable condenser
C1	1292	.0005 mf. Mica
C2	10026	.02 x 400 v.
C3		Ant. Trimmer Condenser
C4		Oscillator Trimmer Condenser
C5	12912	.00025 Mica
C6	1009	.05 x 200 v.
C7	1009	.05 x 200 v.
C8	1001	.1 x 400 v.
C9	1295	.0001 mf. Mica
C10	10011	.01 x 400 v.
C11	11962B	60 mf. Lytic
C12	12912	.00025 mf. Mica
C13	10011	.01 x 400 v.
C14	11962B	60 mf. Lytic
C15	11962B	40 mf. Lytic
C16	10091	.15 x 400 v.
C17	10067	.025 x 400 v.
C18	10026	.02 x 400 v.
T1	11192B	Antenna Coils complete
T2	11073	Oscillator Coil complete
T3	108117	Input I.F.—470 kc. complete
T4	10895D	Output I.F.—470 kc. complete
T5	10560	Output Transformer
T6	114116C	5" Dynamic Speaker
T7	104138	Phono Motor
S1		Off-On Switch on Volume Control
S2	12541C	Phono-Radio Switch
P1	10794	T44 Pilot Light

©John F. Rider, Publisher

MODEL 632 Series A
Socket,Trimmers
Alignment,Notes

BELMONT RADIO CORP.

DESCRIPTION

TUBES:
DESCRIPTION:

The tube complement of this chassis consists of the following octal base glass tubes which are interchangeable with metal tubes.

The type and function of each tube is as follows:

1—Type 6A8G Pentagrid Mixer, First Detector-oscillator.
1—Type 6K7G Remote Cut-Off Pentode, I.F. Amplifier (470 K.C.).
1—Type 6Q7G Duplex-Diode Triode Second Detector, A.V.C. and First Audio.
1—Type 25L6G Beam Output Amplifier
1—Type 25Z6G High Vacuum Rectifier.
1—Type L49B Ballast Tube.

ALIGNMENT PROCEDURE

CHASSIS MODEL 632
Series A

- Volume control—Maximum all adjustments.
- Connect B - of radio chassis to ground post of signal generator through .1 Mfd. condenser.
- Connect dummy antenna value in series with generator output lead.
- Connect output meter across primary of output transformer.
- Allow chassis and signal generator to "heat up" for several minutes.
- Attenuate the signal from the signal generator to prevent the leveling-off action of the AVC.
- Repeat the procedure as a final check.

The following equipment is required for aligning:

- An all wave signal generator which will provide an accurately calibrated signal at the test frequencies as listed.
- Output indicating meter.
- Non-metallic screwdriver.
- Dummy antennas—.1 mf., 100 mmf.

BAND	SIGNAL GENERATOR Frequency Setting	Dummy Antenna	Connect on to Radio	Variable Condenser Setting	Trimmers Adjusted (in Order Shown)	Trimmer Function	Adjustment
I.F.	470 Kc.	.1 MFD.	Grid of 6K7G	Rotor full open (Plates out of mesh)	Two trimmers on top (See Fig. 1)	Output I.F.	Adjust to maximum output
	470 Kc.	.1 MFD.	Grid of 6A8G	Rotor full open (Plates out of mesh)	Two trimmers on top (See Fig. 1)	Input I.F.	Adjust to maximum output
BROAD CAST BAND	1720 Kc.	100 mmf.	Antenna Lead	Rotor full open (Plates out of mesh)	Trimmer—Top of rear section of gang (See Fig. 1)	Broadcst Oscillator	Adjust to maximum output
	1400 Kc.	100 mmf.	Antenna Lead	Set dial at 1400 Kc.	Trimmer—Top of front section of gang (See Fig. 1)	Broadcast Antenna	Adjust to maximum output

SERVICE NOTES:

Voltage taken from different points of circuit to chassis are measured with volume control full on, all tubes in their sockets and speaker connected, with a volt meter having a resistance of 1000 ohms per volt.

All voltages are to be measured with 115 volts A.C. input to receiver.

Resistances of coils and transformer windings are indicated in ohms on schematic circuit diagram.

To check for open by-pass condensers, shunt each condenser with another condenser of the same capacity and voltage rating which is know to be good, until the defective unit is located.

Failure to operate, noisy or weak reception is usually due to defective tubes, the tubes making poor contact with sockets or grid clips making poor contact with the caps of the tubes. Tubes may be checked very easily by replacing with other tubes which are known to be good.

Excessive hum, stuttering, low volume and a reduction in all D. C. voltages is usually caused by a shorted electrolytic condenser; open by-pass condensers frequently cause oscillation and distorted tone.

ALIGNING INSTRUCTIONS:

CAUTION:—No aligning adjustments should be attempted without first thoroughly checking over all other possible causes of trouble, such as poor installations, open or grounded antenna systems, low line voltage, defective tubes, condensers and resistors. In order to properly align this chassis, an oscillator (generator) is absolutely necessary. No aligning adjustments should be attempted with the chassis in the cabinet.

TO REMOVE CHASSIS FROM THE CABINET:

Remove the four bolts which are used to fasten the chassis to the cabinet shelf; pull the knobs off their shafts and pull off the five buttons on the automatic levers.

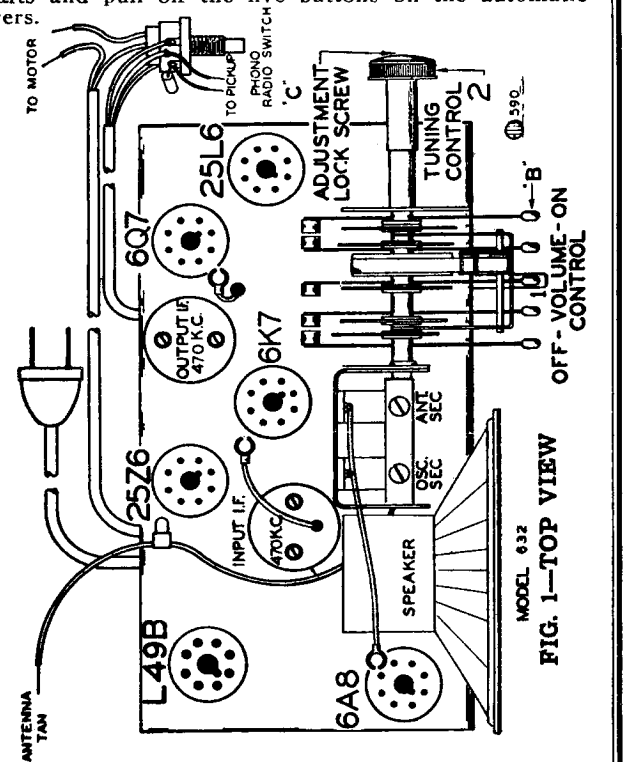

FIG. 1—TOP VIEW

©John F. Rider, Publisher

BELMONT RADIO CORP.

MODEL 665 Series A
Schematic, Voltage
Parts Trimmers

Power Consumption ..... 55 Watts (at 115 Volts 60 Cycles)
Power Output ..... 1.5 Watts Undistorted, 3.2 Watts Maximum
Intermediate Frequency ..... 465 KC.

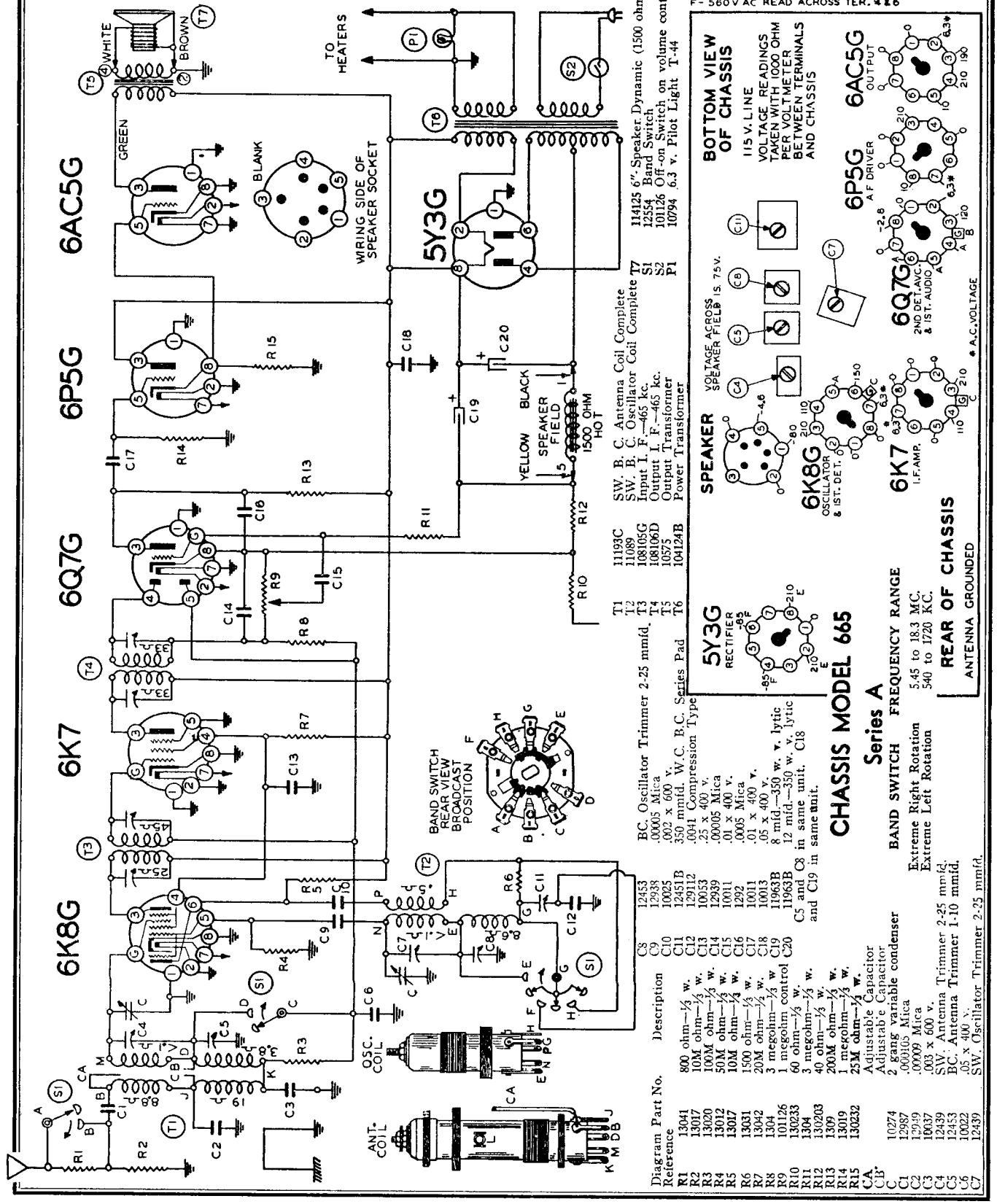

A - CANNOT BE MEASURED WITH VOLTMETER.
B - BIAS OF -1.8 V READ ACROSS R-12
C - BIAS OF -2.8 V READ ACROSS R-10
E - 5 V AC READ ACROSS TER. 2 & 8
F - 560 V AC READ ACROSS TER. 4 & 6

T1	11193C	SW. B. C. Antenna Coil Complete
T2	11089	SW. B. C. Oscillator Coil Complete
T3	108105G	Input I. F.—465 kc.
T4	108106D	Output I. F.—465 kc.
T5	10575	Output Transformer
T6	104124B	Power Transformer
T7	114125	6" Speaker Dynamic (1500 ohm field)
S1	12554	Band Switch
S2	101126	Off-on Switch on volume control
P1	10794	6.3 v. Pilot Light T-44

Diagram Reference	Part No.	Description
R1	13041	800 ohm—½ w.
R2	13017	10M ohm—½ w.
R3	13020	100M ohm—½ w.
R4	13012	50M ohm—½ w.
R5	13017	10M ohm—½ w.
R6	13031	1500 ohm—½ w.
R7	13042	20M ohm—½ w.
R8	1304	3 megohm—½ w
R9	101126	1 megohm control
R10	130233	60 ohm—½ w.
R11	1304	3 megohm—½ w.
R12	130203	40 ohm—½ w.
R13	1309	200M ohm—½ w.
R14	13019	1 megohm—½ w.
R15	130232	25M ohm—½ w.
CA		Adjustable Capacitor
CB*		Adjustable Capacitor
C	10274	2 gang variable condenser
C1	12987	.000105 Mica
C2	12949	.00009 Mica
C3	10037	.003 x 600 v.
C4	12439	SW. Antenna Trimmer 2-25 mmfd.
C5	12453	BC. Antenna Trimmer 1-10 mmfd.
C6	10022	.05 x 400 v.
C7	12439	SW. Oscillator Trimmer 2-25 mmfd.
C8	12453	BC. Oscillator Trimmer 2-25 mmfd.
C9	12938	.00005 Mica
C10	10025	.002 x 600 v.
C11	12451B	350 mmfd. W.C. B.C. Series Pad
C12	129112	.0041 Compression Type
C13	10053	.25 x 400 v.
C14	12939	.00005 Mica
C15	10011	.01 x 400 v.
C16	1292	.005 Mica
C17	10011	.01 x 400 v.
C18	10013	.05 x 400 v.
C19	11963B	8 mfd.—350 w. v. lytic
C20	11963B	12 mfd.—350 w. v. lytic C5 and C8 in same unit. C18 and C19 in same unit.

©John F. Rider, Publisher

MODEL 665 Series A
Alignment, Tuner
Trimmers, Notes

BELMONT RADIO CORP.

FIG. 1—TOP VIEW

See also ALIGNMENT PROCEDURE Model 611 Series A.

ALIGNING INSTRUCTIONS

BAND	Frequency Setting	SIGNAL GENERATOR Dummy Antenna	SIGNAL GENERATOR Connection to Radio	Position of Band Switch	Variable Condenser Setting	Trimmers Adjusted (in Order Shown)	Trimmer Function	Adjustment
I. F.	465 Kc.	.1 MFD.	Grid of 6K7	Broadcast (Extreme left rotation)	Rotor full open (Plates out of mesh)	Two trimmers on top (See Fig. 1)	Output I. F.	Adjust to maximum output
	465 Kc.	.1 MFD.	Grid of 6K8	Broadcast (Extreme left rotation)	Rotor full open (Plates out of mesh)	Two trimmers on top (See Fig. 1)	Input I. F.	Adjust to maximum output
SHORT WAVE BAND	17 Mc.	400 ohms	Antenna lead	Short wave (Extreme right rotation)	Set dial at 17 MC	Trimmer (C7) (See Fig. 3)	Short wave Oscillator	Adjust to maximum output
	17 Mc.	400 ohms	Antenna lead	Short wave (Extreme right rotation)	Dial set at 17 MC	Trimmer (C4) (See Fig. 3)	Short wave Antenna	Adjust to maximum output
BROADCAST BAND	1720 Kc.	200 mmf.	Antenna lead	Broadcast (Extreme left rotation)	Rotor full open (Plates out of mesh)	Trimmer (C8) (See Fig. 3)	Broadcast Oscillator	Adjust to maximum output
	1400 Kc.	200 mmf.	Antenna lead	Broadcast (Extreme left rotation)	Set dial at 1400 Kc.	Trimmer (C5) (See Fig. 3)	Broadcast Antenna	Adjust to maximum output
	600 Kc.	200 mmf.	Antenna lead	Broadcast (Extreme left rotation)	Set dial at 600 Kc.	Trimmer (C11) (See Fig. 3)	Broadcast oscillator series pad	Adjust to maximum rock dial. (See note "A")
IMAGE REJECTION ADJUSTMENTS	2100 Kc.	200 mmf.	Antenna lead	Broadcast (Extreme left rotation)	Pick up signal at 1170 Kc. on dial	Wire capacitor (CB) (See circuit diagram)	Image rejection	Adjust by twisting for minimum output. (See note "B")
	2630 Kc.	200 mmf.	Antenna lead	Broadcast (Extreme left rotation)	Pick up signal at 1700 Kc. on dial	Wire capacitor (CA) (See circuit diagram)	Image rejection	Adjust by moving for minimum output. (See note "C")

NOTE "A" Turn the dial back and forth slightly (rock) and adjust trimmer until the peak of greatest intensity is obtained.

NOTE "B" 2100KC is the image frequency of 1170 KC. Adjust wire capacity (CB) by twisting the two wires until a **minimum** output is obtained.

NOTE "C" 2630KC is the image frequency of 1700KC. Adjust wire capacity (CA) by moving the wire either toward or away from the antenna coil winding until a **minimum** output is obtained on the output meter.

SEE NOTES MARKED • ,ALIGNMENT OF MODEL 611 SERIES A.

PROCEDURE FOR SETTING THE AUTOMATIC TUNER LEVERS:

There are six levers on the dial by means of which six stations may be selected, (See "B", Fig. 2).

Make up a list of local stations you tune in regularly; any number up to and including 6.

Punch out from the set of station call letter tabs supplied, the call letters of the stations you have selected.

Above each automatic tuner lever an opening in the escutcheon is provided for inserting the call letter tabs, (See "A" Fig. 2). Any order of grouping can be used, either by arranging the call letters alphabetically or grouping them to correspond with the calibration on the dial scale, namely starting with the lowest frequency station on the right and so on up in frequency to the highest frequency station on the left.

Insert the call letter tabs in the rectangular openings in the escutcheon above each of the automatic tuner levers. One of the small celluloid tabs supplied should be snapped into place over each of the station call letter tabs.

Press DOWN ALL THE WAY any one of the automatic tuner levers. Holding it down FIRMLY, tune in by means of the tuning knob (No. 3) the station indicated on the station call letter tab above this lever. Turn the tuning knob very slowly back and forth (while still holding lever in downward position) until the signal is clearest. The station will then be accurately tuned in. Release the lever.

Press down another automatic tuner lever. Holding it down FIRMLY, carefully tune in the station indicated on the call letter tab above this lever. Release this lever.

Follow this procedure until you have selected all of your favorite stations.

Rotate the tuning knob (No. 3) to the right (clockwise) as far as it will turn. Now remove from the right side of the cabinet the metal button, and, with a screw driver inserted through the hole, tighten the reset locking adjustment screw "C" (See Fig. 1). It is VERY IMPORTANT that this locking screw is turned until it is ABSOLUTELY TIGHT.

This screw will lock in place all the stations you have selected on the levers. (Note: Reset Lock Screw "C", is loose when radio is shipped from factory).

If you should desire to change any station you selected to another, loosen the reset locking screw "C", four or five complete turns; select the new station as explained. (Note: If the dial mechanism works hard when setting up a new station for one of the automatic tuner levers, it is due to the locking screw being too tight. Loosen the reset locking screw "C", until the dial mechanism works freely with the tuner lever pressed down).

BE SURE TO RETIGHTEN THE RESET LOCK SCREW, otherwise the stations will not stay adjusted to the levers.

The automatic dial is now set up for quick tuning. Press down on the lever and—your favorite station is selected.

TUBES:

The tube complement of this chassis consists of the following octal base glass and metal tubes:

The type and function of each tube is as follows:

1—Type 6K8 Triode Hexode, First Detector-oscillator.

1—Type 6K7 Remote Cut-Off Pentode, I. F. Amplifier (465 K. C.)

1—Type 6Q7G Duplex Diode Triode Second Detector, A. V. C. and First Audio.

1—Type 6P5G Driver Stage.

1—Type 6AC5G Positive Grid Triode Output Amplifier.

1—Type 5Y3G High Vacuum Rectifier.

Transformers are available and chassis are sometimes equipped with universal transformers for operation on 25, 40 and 60 cycles and with primary taps for 110, 130, and 230 volts.

CHASSIS MODEL 665 Series A

SERVICE NOTES:

Voltage taken from different points of circuit to chassis are measured with volume control full on, all tubes in their sockets and speaker connected, with a volt meter having a resistance of 1000 ohms per volt.

All voltages as indicated on the voltage chart are measured with 115 volts on the primary of the power transformer.

Resistances of coil windings are indicated in ohms on the schematic circuit diagram.

To check for open by-pass condensers, shunt each condenser with another condenser of the same capacity and voltage rating, which is known to be good, until the defective unit is located.

Excessive hum, stuttering, low volume and a reduction in all D. C. voltages is usually caused by a shorted electrolytic condenser; open by-pass condensers frequently cause oscillation and distorted tone.

©John F. Rider, Publisher

BELMONT RADIO CORP.

MODEL 667
Schematic, Voltage
Socket, Trimmers, Parts

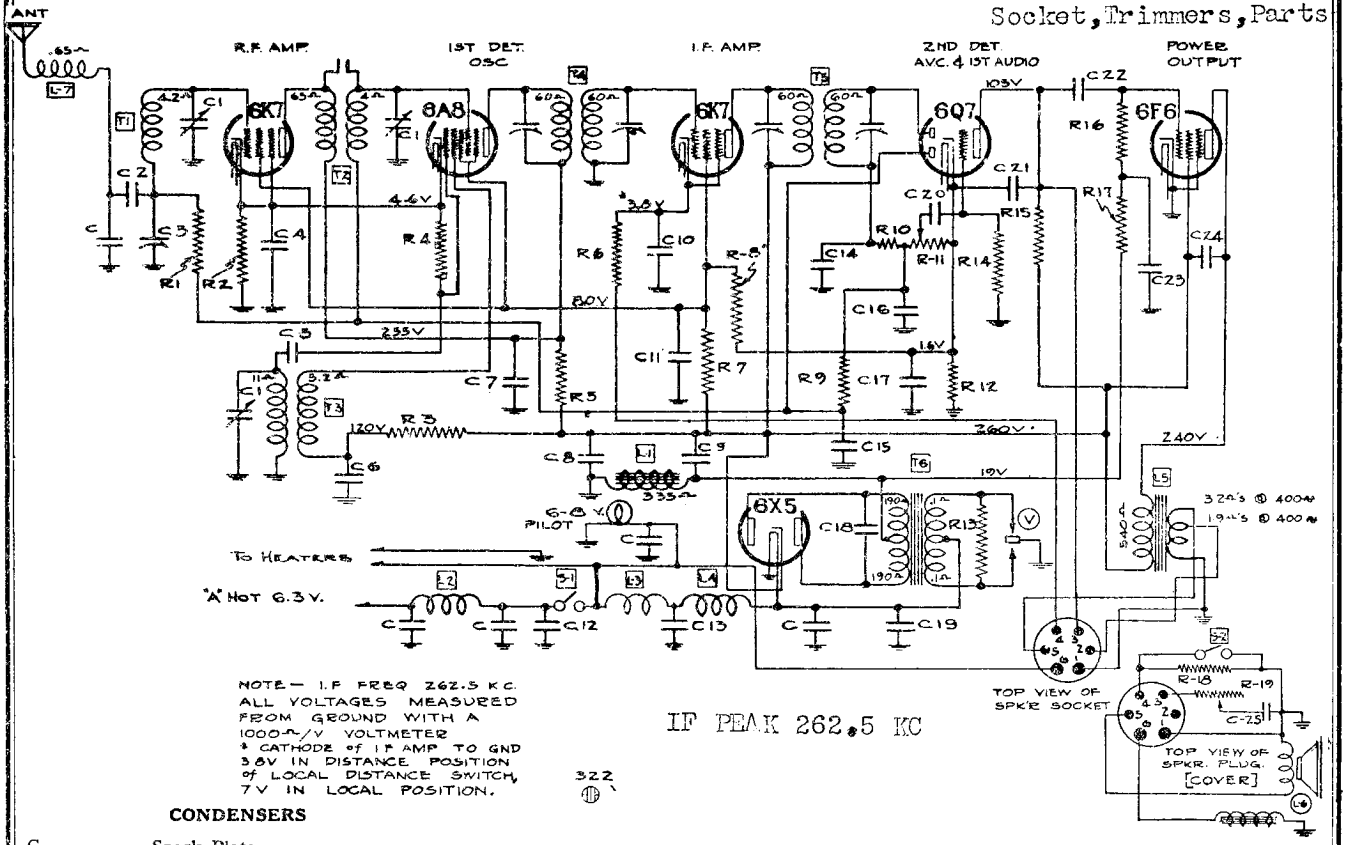

NOTE— I.F. FREQ 262.5 K.C.
ALL VOLTAGES MEASURED FROM GROUND WITH A 1000Ω/V VOLTMETER
* CATHODE of I.F. AMP TO GND 3.8V IN DISTANCE POSITION of LOCAL DISTANCE SWITCH, 7V IN LOCAL POSITION.

IF PEAK 262.5 KC

322

CONDENSERS

C		Spark Plate
C1	102-45	3 Gang Condenser
C2	129-73	.002 Mica - MW-W - 10%
C3	124-36	Series Pad
C4	116-20	.1 x 200 v. - 20%
C5	129-12	.00025 Mica - MT - 20%
C6	116-19	.1 x 400 - 20%
C7	116-19	.1 x 400 - 20%
C8	119-34	8. mfd. - 350 W v.
C9	119-34	4 mfd. 350 W v.
C10	116-19	.05 x 200 v. - 20%
C11	116-20	.25 x 200 v. - 20%
C12	100-31	.5 x 120 v. - 10-50% - Braid leads
C13	100-31	.5 x 120 v. - 10-50%
C14	129-5	.0001 Ceramicon - 20%
C15	115-19	.05 x 200 v. - 20%
C16	129-5	.0001 Ceramicon - 20%
C17	116-20	.02 x 200 - 20%
C18	100-36	.01 x 1400 v. - 20% - 10% "A"
C19	100-31	.5 x 120 v. - 10% - 50%
C20	116-20	.02 x 200 - 20%
C21	129-5	.0001 Ceramicon - 20%
C22	100-55	.01 x 400 - 25%
C23	100-48	.25 x 200 - 20%
C24	100-54	.006 x 600 - 25%
C25	100-11	.01 x 400 - 25%

C4, C11, C17, C20 All in Block 116-20
C7, C6, C10, C15 All in Block 116-19

RESISTORS

R1	130-141	250M ohm - 1/3 w. Insulated
R2	130-54	500 ohm - 1/3 w.
R3	130-138	50M ohm - 1/2 w. Insulated
R4	130-52	50M ohm - 1/3 w.
R5	130-137	1500 ohm - 1/3 w. Insulated
R6	130-154	1000 ohm - 1/3 w. Insulated
R7	130-143	30M ohm - 1.2 w.
R8	130-139	40M ohm - 1/3 w. Insulated
R9	130-19	1 meg - 1/3 w.
R10	130-162	50M ohm - 1/3 w. Insulated
R11	101-73	250M ohm - Volume Control
R12	130-153	700 ohm - 1/3 w.
R13	130-84	200 ohm - 1/3 w.
R14	130-19	1 meg ohm - 1/3 w.
R15	130-11	250M ohm - 1/3 w.
R16	130-5	300M ohm - 1/3 w.
R17	130-11	250M ohm - 1/3 w.
R18	130-161	4000 ohm - 1/3 w. Insulated
R19	101-45	Tone Control 1 Meg ohm.

PARTS

L7	111-76	Antenna Filter Choke Assem
T1	111-73	Antenna Coil Complete
T2	109-36	R.F. Coil Complete
T3	110-59	Oscillator Coil Complete
T4	108-101	I.F. Input
T5	108-102	I.F. Output
T6	104-83	Power Transformer
L1	105-39	Filter Choke (335 ohms)
L2	105-26	"A" Choke
L3	105-24	"A" Choke
L4	105-19	"A" Choke
L5	105-40	Output transformer
L6	114-62	Speaker. Dynamic
S1		Switch on Volume Control
S2	125-28	Sensitivity switch.

CONNECTIONS TO BATTERY

The battery cable, number 107-82, (red wire with fuse receptacle at one end and terminal lug at other end) must be connected to battery terminal of ammeter. At the same time connect ammeter capacitor, number 148-3, to battery terminal of ammeter, other end of condenser to any convenient grounded screw on back of instrument panel. Make certain that insulating sleeve is slipped over fuse when fuse is placed in receptacle, before connecting to short battery cable from receiver.

When connected properly, the discharge due to current drawn by the receiver should not indicate on the ammeter. This is important, since if improperly connected, as shown by the deflection of ammeter, additional motor interference may be encountered.

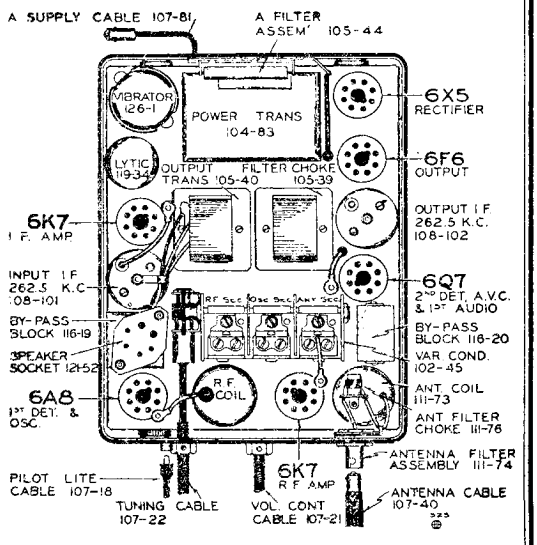

©John F. Rider, Publisher

MODEL 667
Alignment, Data
Wiring Data, Notes

BELMONT RADIO CORP.

SERVICE NOTES

Voltages taken from different points of circuit to chassis are measured with volume control full on, all tubes in their sockets and speaker connected, with a volt meter having a resistance of 1000 ohms per volt. These voltages are clearly indicated on the circuit diagram.

In order to prevent signal from acting upon A.V.C. and affecting accuracy of voltage measurements, aerial and ground leads should be short circuited while making measurements.

All voltages are to be measured with 6.3 volts input to receiver. Resistances of coils and transformer windings are indicated in ohms on schematic circuit diagram.

To check for open by-pass condensers, shunt each condenser with another condenser of the same capacity and voltage rating, which is known to be good, until the defective unit is located.

DESCRIPTION

Model No. 667 is a six-tube superheterodyne receiver having a tuning range of 530 K.C. to 1550 K.C., operates from a 6.0 volt storage battery and uses the automotive type 6.3 volt tubes. The "B" supply is obtained from a vibrator with a tube rectifier.

The I.F. frequency used is 262.5 K.C., the R.F. end of the receiver consisting of a high gain iron core antenna coil which gives high signal to noise ratio and an R.F. stage especially designed to give high image rejection and high I.F. attenuation. The I.F. transformers are designed to give high gain and selectivity and yet to have a broad nose for ease of tuning and hi-fidelity response. They are of the air core type and wound with solid wire to give *minimum* drift and variation of gain due to climatic changes.

This receiver has been carefully designed to facilitate servicing, the top and bottom covers are both removable and are fastened in place by spring clips, self tapping screws and trimount buttons.

DUMMY ANTENNAS

The dummy antennas referred to in the following instructions are:

"I.F. Dummy" —A .5 mfd. condenser connected in series with the test oscillator output lead.

"Broadcast Dummy"—A 175 mmfd. condenser connected in series with the output lead of the test oscillator.

CITY-COUNTRY SWITCH

This switch is located on the chassis cover.

City—While driving in the city or close to broadcasting stations, it is best to turn the knob to the "city" position for least noise.

Country—When driving in the country, or when listening to distant stations, best results are obtained with the knob turned to the "country" position. In this position the sensitivity is at a maximum.

RESONANCE INDICATOR

Use as a resonance indicator an output meter connected across the primary of the speaker input transformer, or by means of an adapter between the plate and screen terminals of the type 6F6 output tube. Maximum deflection of the meter indicates resonance. Use only enough signal to get a readily readable output. A low range output meter or the low scale of a multi-range meter should be used.

I.F. ALIGNMENT: (262.5 K.C.)

1. With variable condenser in its minimum capacity position (plates entirely out of mesh) and with volume control full on, connect test oscillator set at 262.5 K.C. in series with I.F. dummy antenna, to grid of 6K7 I.F. tube.
2. Adjust trimmer condensers of output I.F. transformer No. 108-102 to resonance with oscillator.
3. Move test oscillator connection to grid of 6A8 tube and adjust trimmer condensers of input I.F. transformer No. 108-101 to resonance with oscillator. See top view for location of these transformers. There are two adjustments on each and they are accessible from the top of the transformer shield and should be adjusted with an insulated screw driver.

BROADCAST ALIGNMENT

1. With variable condenser in its minimum capacity position, connect test oscillator set at 1550 K.C. in series with broadcast dummy to the antenna lead of receiver.
2. Adjust oscillator trimmer of variable condenser to resonance. (This adjustment is on the middle section of the three-gang condenser—see top view, Fig. 2).
3. Shift test oscillator to 1400 K.C. and pick up signal by rotating condenser and adjust R.F. and antenna trimmers to resonance (see top view, Fig. 2).
4. Re-set test oscillator to 600 K.C. and rotate variable condenser to 600 K.C. Adjust series pad in the antenna circuit, rocking gang condenser to and fro at the same time adjusting series pad for maximum gain. This pad is mounted on the side of the antenna can.
5. Go back and check 1400 K.C. If adjustment is made here, check 600 K.C. again.
6. Check for sensitivity at 1000 K.C. by setting test oscillator to this frequency and picking up the signal by rotating variable condenser. Under no circumstances bend plates of variable condenser sections to correct tracking.

WIRING CONNECTIONS AND ASSEMBLY

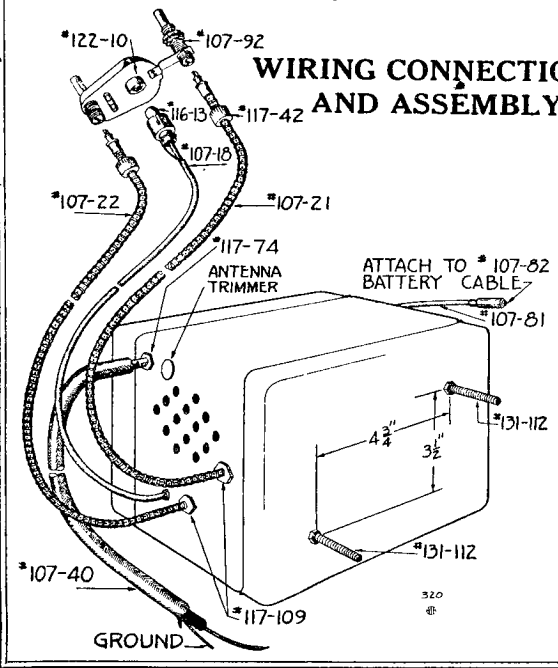

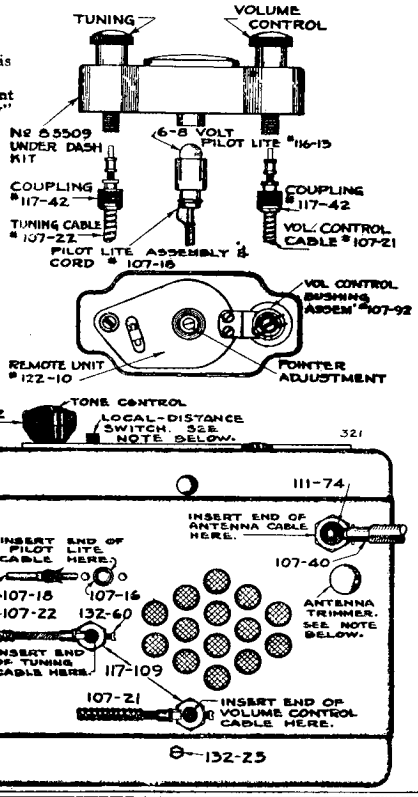

ADJUSTING ANTENNA TRIMMER

Tune in a weak signal at approximately 600 KC with the volume control about three-fourths on. Turn the adjusting screw of the antenna trimmer up or down until maximum output is obtained. See Fig. 1 for location of this trimmer.

DIAL ADJUSTMENT

Tune set to some station of a known frequency (between 800 and 1200 K.C.), hold selector knob, then remove pilot light assembly from back of remote head and with a screw driver adjust the slotted screw through this opening and in this way adjust the dial pointer to the correct frequency setting.

©John F. Rider, Publisher

BELMONT RADIO CORP.

MODEL 677
Schematic, Voltage
Socket, Trimmers
Parts

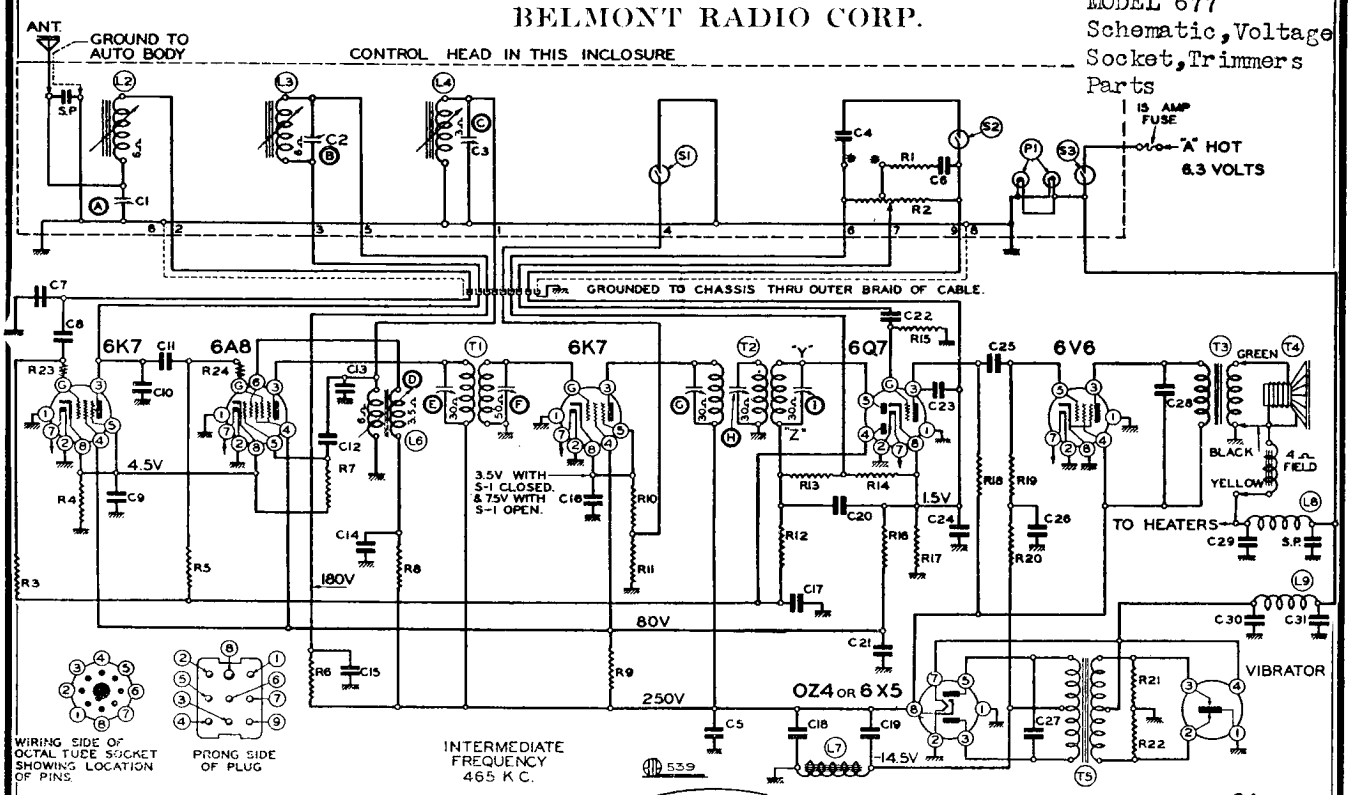

Code	Part No.	Description
		CONDENSERS
C1	124-45	Antenna trimmer 50 - 450 w. c. 350 mmf.
C2	127-82	R. F. Trimmer - 5-30 mmf.
C3	127-84	Oscillator Trimmer 5 - 30 mmf.
C4	100-25	.002 x 600 v. - 25%
C5	100-88	.1 x 400 v. 50 - 10%
C6	100-19	.006 x 600 v. - 25%
C7	129-95	.00015 Mica 2½%
C8	129-39	.00005 Mica 20%
C9	100-22	.05 x 200 v. 25%
C10	129-96	.0000035 Mica 5%
C11	129-2	.0005 Mica 20%
C12	129-12	.00025 Mica 20%
C13	129-101	.00007 Mica 5%
C14	100-13	.05 x 400 v. 25%
C15	116-24	By pass block .25 x 400 v. 20-10%
C16	100-9	.05 x 200 v. 25%
C17	100-22	.05 x 200 v. 25%
C18	119-51	12 mfd. 350 w.v. lytic
C19	119-51	12 mfd. 350 w.v. lytic
C20	129-5	.0001 Mica 20%
C22	100-11	.01 x 400 v. 25%
C21	116-24	.25 x 400 v. 20-10% By pass block
C23	129-5	.0001 Mica 20%
C24	100-26	.02 x 400 v. 25%
C25	100-11	.01 x 400 v. 25%
C26	116-24	.25 x 200 v. 20-10%
C27	100-36	.01 x 1400 v. 20-10%
C28	100-89	.008 x 800 v. 10%
C29	129-6	.002 Mica 20%
C30	100-31	.5 x 120 v. 50-10%
C31	100-31	.5 x 120 v. 50-10%
SP		Spark Plates (2)

C15, C21 and C26 in same unit
C18 and C19 in same unit

		RESISTORS	
R1	130-214	30M - ½ w.	20%
R2	101-109	1.2 meg. volume control	
R3	130-19	1 megohm - ½ w.	20%
R4	130-79	400 ohm - ½ w.	10%
R5	130-19	1 megohm - ½ w.	20%
R6	130-21	20M ohm - ½ w.	20%
R7	130-12	50M ohm - ½ w.	20%
R8	130-12	50M ohm - ½ w.	20%
R9	130-65	30M ohm - 1 watt	20%
R10	130-39	700 ohm - ½ w.	20%
R11	130-85	3M ohm - ½ w.	20%
R12	130-19	1 megohm - ½ w.	20%
R13	130-20	100M ohm - ½ w.	20%
R14	130-118	600M ohm - ½ w.	20%
R15	130-19	1 megohm - ½ w.	20%
R16	130-208	40M ohm - ½ w.	20%
R17	130-101	600 ohm - ½ w.	10%
R18	130-11	250M ohm - ½ w.	20%
R19	130-5	300M ohm - ½ w.	20%
R20	130-11	250M ohm - ½ w.	20%
R21	130-56	100 ohm - ½ w.	20%
R22	130-56	100 ohm - ½ w.	20%
R23	130-54	500 ohm - ½ w.	20%
R24	130-54	500 ohm - ½ w.	20%

		PARTS
L2	111-100	Antenna permeability coil complete
L3	109-40	R. F. Permeability coil complete
L4	110-84	Oscillator permeability coil complete
L6	110-75	Oscillator shunt coil Adj.
L7	105-62	Filter Choke - 250 ohms
L8	105-66	"A" Choke
L9	105-65	"B" Choke

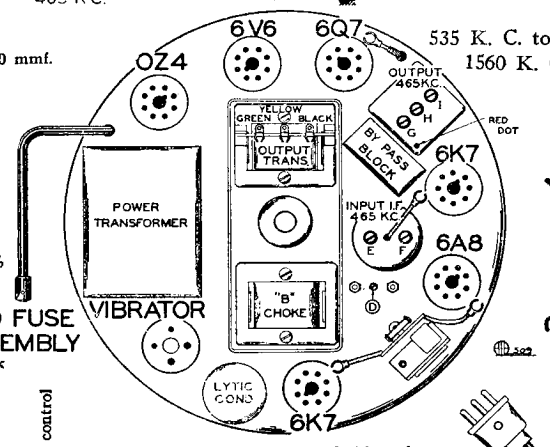

Fig. 3—Top View of Chassis

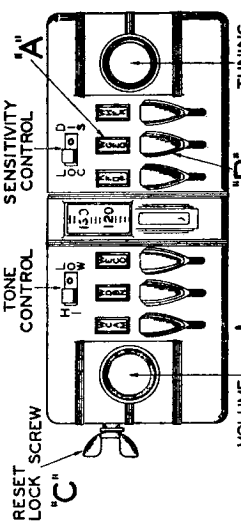

Fig. 2—Front View of Remote Tuner Unit

MODEL 677
AUTO RADIO

Input I. F. Complete - 465 kc.
Output I. F. Complete - 465 kc.
Output Transformer
8" Dynamic speaker
Power Transformer
Sensitivity switch
Tone control switch
Off-on switch on volume control
6-8 v. pilot light (2)

T1	108-96C
T2	108-115
T3	105-61
T4	114-113
T5	104-132
S1	125-47
S2	125-47
S3	107-97
P1	

Mica condensers are coded with an additional dot indicating tolerance:

Tolerance	Percent	Color of Dot
	2½%	White
	5%	Green
	10%	Blue
	15%	Yellow
More Than	20%	Red
		None.

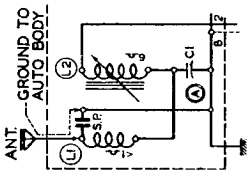

Ser. No. 30001 to 42000
R23, R24 Grid Res. NOT USED

C13	129-97	.00005 Mica	5%
C18	119-51	8.0 mfd. 350 w.v. lytic	
C19	119-51	8.0 mfd. 350 w.v. lytic	
C28	100-38	.01 x 800 v	10%
L1	111-96	Antenna Choke (No. 111-97)	
L5	110-77	Oscillator series coil (No. 110-79)	

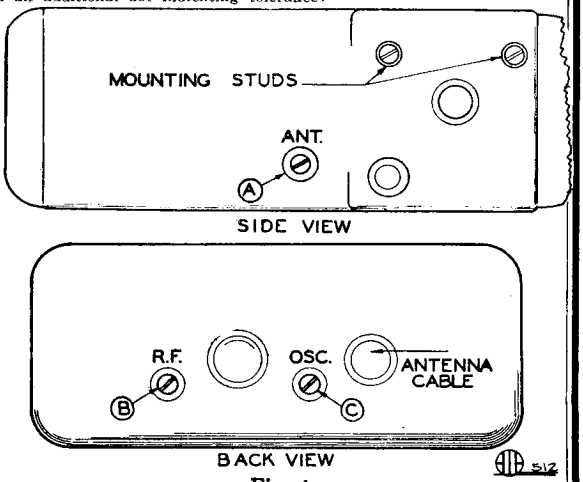

Fig. 4

©John F. Rider, Publisher

MODEL 677
Installation
Alignment, Tuner

BELMONT RADIO CORP.

WIRING CONNECTIONS AND ASSEMBLY

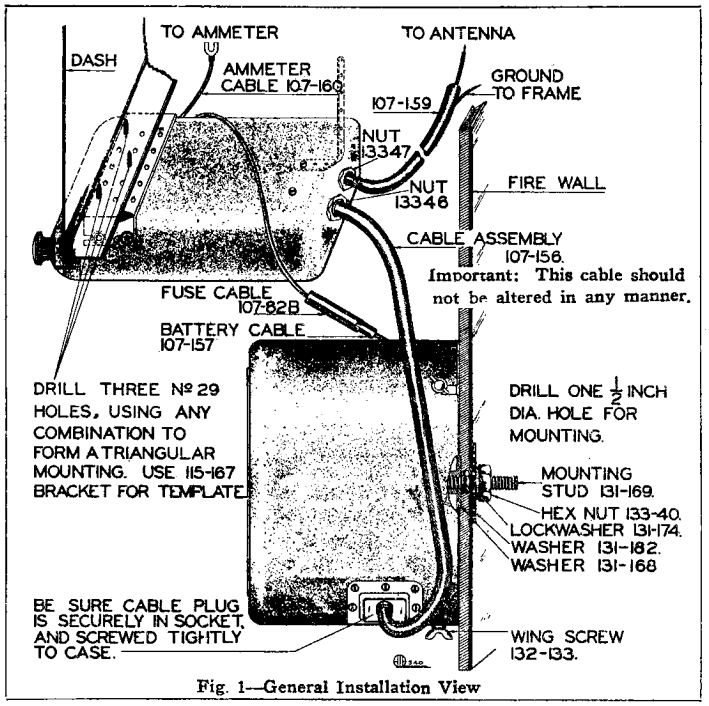

Fig. 1—General Installation View

Remote Tuner Units are matched to each radio unit at the factory; therefore it is important in such cases where another Remote Tuner Unit is required to replace the original one, that the entire Remote Unit be rebalanced to match the Radio Unit.

ADJUSTING ANTENNA TRIMMER (SET IN CAR)

Tune in a weak signal at approximately 1400 KC with the volume control about three-fourths on. Turn the adjusting screw of the antenna trimmer up or down until maximum output is obtained. See Fig. 4, adjustment "A" on side of remote tuner unit.

DUMMY ANTENNAS

The dummy antennas referred to in the following instructions are:

"I.F. Dummy" —A .5 mfd. condenser connected in series with the test oscillator output lead.

"Broadcast Dummy"—A 175 mmfd. cendenser connected in series with the output lead of the test oscillator.

I.F. ALIGNMENT: (465 K.C.)

IMPORTANT:

To align the output I.F. transformer without using a cathode ray oscillograph a 10M ohm resistor must be shunted across the tertiary coil of this unit.

Connect the resistor as indicated by points "Y" and "Z" on the circuit diagram as follows.

Locate the wires coming from the bottom of the output I.F. coil assembly on the underside of the radio chassis.

The white lead with green tracer which is connected to diode plate terminal No. 5 on the 6Q7 tube socket is one point and the white lead with brown tracer which is connected to the end terminal of the terminal strip is the other point. Proceed as follows:

1. With the dial of the Remote Tuner Unit set at 1400 K.C. and with volume control full on, connect test oscillator set at 465 K.C. in series with I.F. dummy to grid of 6K7 I.F. tube.
2. Adjust trimmers "G" and "H" of output I.F. transformer for maximum gain, (See Fig. 3, top view).
3. Disconnect the 10M ohm resistor which has been shunted across the tertiary winding and adjust trimmer "I" for maximum gain.
   (a) This transformer is now correctly tuned. Under no circumstances re-adjust trimmers "G" and "H" after the 10M ohm resistor has been removed.
   (b) For alignment of the output I.F. transformer using a cathode ray oscillograph the 10M ohm resistor is not used and the procedure is similar to the alignment of any two circuit I.F. transformer; merely tune for a symmetrical curve of maximum amplitude.
   (c) Output connections for the cathode ray oscillograph should be made to pin No. 8 on 6Q7 tube socket and to the end terminal on the terminal strip; at this point the diode load resistors terminate.
4. Move test oscillator connection to grid of 6A8 tube and adjust trimmer condensers "E" and "F" of input I.F. transformer for maximum gain.

NOTE: A red dot on top of output I.F. can designates location of trimmer "G"

BROADCAST ALIGNMENT:

1. With the dial on the Remote Tuner Unit set at 1560 K. C., connect test oscillator set at 1560 K. C. in series with broadcast dummy to the antenna lead of receiver.
2. Adjust oscillator trimmer (adjustment "C", on back of Remote Tuner Unit) to resonance. (See Fig. 4, back view).
3. Re-set test oscillator to 1400 K.C. and pick up signal by rotating dial on Remote Tuner Unit. Adjust R. F. trimmer (adjustment "B", on back of Remote Tuner Unit), and Antenna Trimmer (adjusment "A", on side of Remote Tuner Unit), to resonance.
4. Re-set test oscillator to 600 K.C. and rotate Remote Tuner Unit dial to 600 K. C. Adjust shunt oscillator adjustment "D", rotating dial to and fro at the same time adjusting shunt oscillator for maximum gain. This adjustment is accessible from the top of the radio chassis, (See Fig. 3, top view).
5. Go back and check 1400 K. C. If adjustment is made here, check 600 K. C. again.

MODEL 677
AUTO RADIO

(Serial No. 30,001 and up)
(Serial No. 42,000 and up)

PROCEDURE FOR SETTING THE AUTOMATIC LEVERS:

It is VERY IMPORTANT that this locking screw is turned until it is ABSOLUTELY TIGHT.

There are six levers on the dial by means of which six stations may be selected. (See "B" Fig. 2). This screw will lock in place all the stations you have selected on the automatic tuner levers. (Note: Reset lock screw "C" is loose when radio is shipped from factory).

Press DOWN ALL THE WAY any one of the automatic tuner levers. Holding it down FIRMLY, tune in by means of the tuning knob (No. 2) the station indicated on the station call letter tab above this lever. Turn the tuning knob very slowly back and forth (while still holding lever in downward position) until the signal is clearest. The station will then be accurately tuned in. Release the lever.

If you should desire to change any station you selected to another, loosen the locking screw "C" one or two turns; select the new station as explained. Be sure to retighten the locking screw, otherwise the stations you have selected will not stay adjusted to the levers.

Voltages taken from different points of circuit to chassis are measured with volume control full on, all tubes in their sockets and speaker connected, with a volt meter having a resistance of 1000 ohms per volt. These voltages are clearly indicated on the circuit diagram.

Press down another automatic tuner lever. Holding it down FIRMLY, carefully tune in the station indicated on the call letter tab above this lever. Release this lever.

In order to prevent signal from acting upon A.V.C. and affecting accuracy of voltage measurements, aerial and ground leads should be short circuited while making measurements.

Follow this procedure until you have selected all of your favorite stations.

Now Rotate the turning knob (No. 2) to the left (counter clockwise) as far as it will turn, and tighten the special reset lock screw ("C") located on left side of remote turner unit. (See Fig. 2).

All voltages are to be measured with 6.3 volts input to receiver.

Receivers bearing Serial Numbers from 30001 and up, had several differences from those bearing Serial Numbers from 42000 and up. These are shown on the schematic page with portions of the schematic.

©John F. Rider, Publisher

BELMONT RADIO CORP.

MODEL 691 Series A
Schematic, Voltage
Socket, Trimmers, Parts

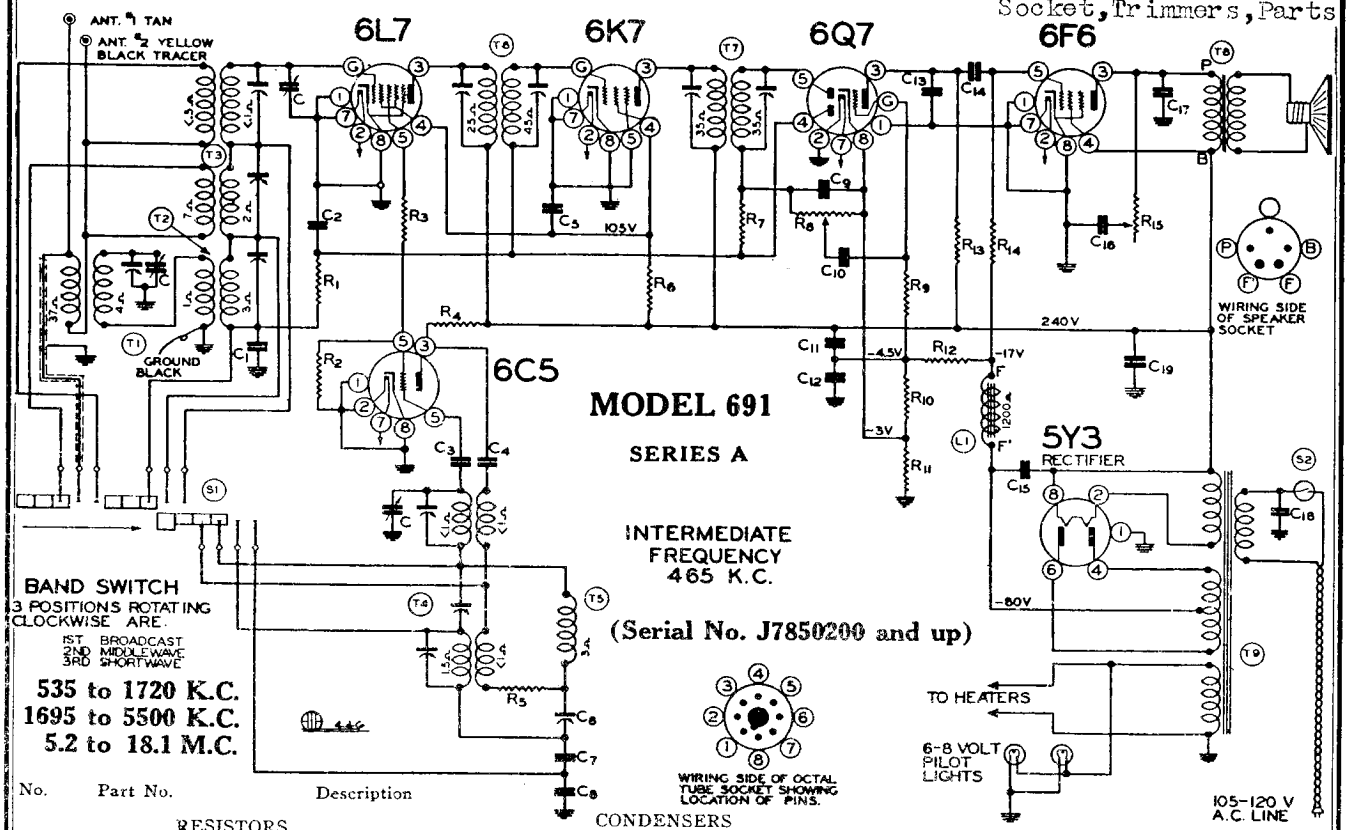

No.	Part No.	Description
		RESISTORS
R1	130-103	100M ohm - 1/3 w.
R2	130-12	50M ohm - 1/3 w.
R3	130-105	150 ohm - 1/3 w.
R4	130-77	10M ohm - 1 watt
R5	130-27	50 ohm - 1/3 w.
R6	130-34	19M ohm - 1 watt
R7	130-4	3 meg - 1/3 w.
R8	101-93	1 meg volume control
R9	130-4	3 meg - 1/3 w.
R10	106-26	32 ohm - resistor strip
R11	106-26	52 ohm - resistor strip
R12	106-26	220 ohm - resistor strip
R13	130-103	100M ohm - 1/3 w.
R14	130-102	500M ohm - 1/3 w.
R15	101-92	50M ohm - tone control
		R10, R11 and R12 in same unit
		CONDENSERS
C	102-60	3 gang variable
C1	100-22	.05 x 200
C2	100-26	.02 x 400
C3	129-39	.00005 Mica
C4	100-37	.003 x 600
C5	100-1	.1 x 400
C6	124-40	.000715 W.C. Series Pad
C7	129-55	.0034 Mica
C8	129-54	.003 Mica
C9	129-5	.0001 Mica
C10	100-26	.02 x 400
C11	119-45	8 mfd. - 400 w. v. lytic
C12	100-20	.1 x 200
C13	129-2	.0005 Mica
C14	100-11	.01 x 400
C15	119-45	8 mfd. 400 w. v. lytic
C16	100-65	.015 x 600
C17	100-37	.003 x 600
C18	100-61	.02 x 600
C19	100-11	.01 x 400
		C11 and C15 in same unit
		PARTS
T1	111-51	Preselector Coil
T2	111-49	B. C. Antenna Coil Complete
T3	111-50	S.W. M.W. Antenna Coil complete
T4	110-39	S.W. M.W. Oscillator Coil complete
T5	110-38	B.C. Oscillator Coil complete
T6	108-109	Input I.F. Coil complete 465 kc.
T7	108-110	Output I.F. Coil complete 465 kc.
T8	114-85B	6" dynamic Speaker
T9	104-106	Power Transformer
L1		Speaker field 1200 ohm
S1	125-40	Wave band switch
S2		Off-On Switch on Volume Control

Mica condensers are coded with an additional dot indicating tolerance:

Tolerance percent	Color of Dot
2½ %	White
5%	Green
10%	Blue
15%	Yellow
20%	Red
More Than 20%	None

The power consumption of this receiver is 75 watts.

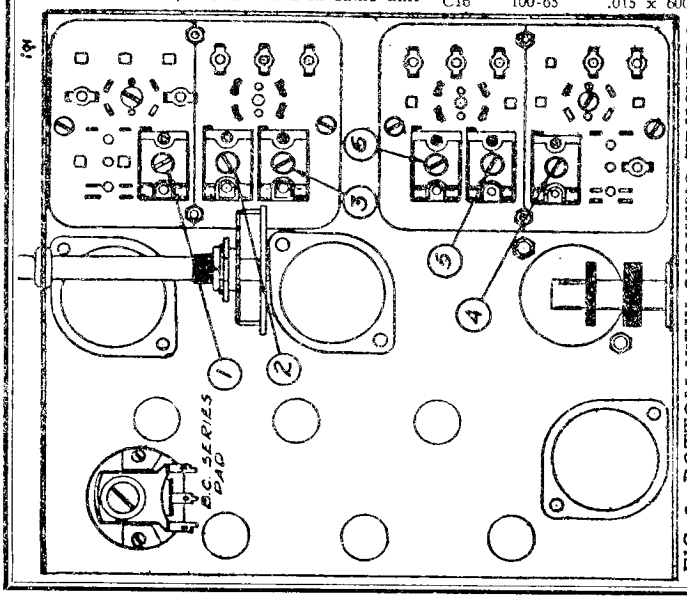

FIG. 3—BOTTOM VIEW SHOWING TRIMMERS

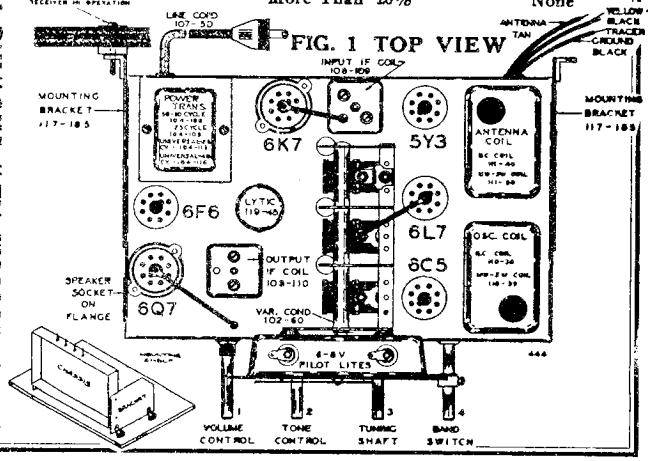

FIG. 1 TOP VIEW

©John F. Rider, Publisher

MODEL 583 Export
MODEL 691
Alignments

BELMONT RADIO CORP.

CHASSIS MODEL 583 SERIES "A"

DUMMY ANTENNAS: **(Serial No. 8A977900 and up)**

The following dummy antennas are used in aligning and are referred to in the following alignment instructions as "Dummy 1", "Dummy 2", and "Dummy 3".

Dummy 1: (I.F.)—Consists of a .1 mfd. condenser connected in series with the external oscillator.

Dummy 2: (Broadcast)—Consists of a 200 mmfd. condenser and a 20 ohm resistor connected in series with each other and in series with the external oscillator.

Dummy 3: (Short Wave)—Consists of a .1 mfd. condenser and a 400 ohm resistor connected in series with each other and in series with the external oscillator.

ALIGNING I.F. TRANSFORMERS: (465 K.C.):

Part No. 108-112B Output I.F. Transformer
Part No. 108-111B Input I.F. Transformer

These I.F. transformers have two adjustments, both of which are accessible from the top of chassis (see top view).

1. With volume control full on, (the extreme right of its rotation), the band changing switch in the broadcast position, (extreme left of its rotation), and with variable condenser in its minimum capacity position, plates entirely out of mesh, make the following adjustments:
   (a) Connect external oscillator set at 465 kilocycles, in series with "Dummy 1", to the control grid cap of the type 6K7 tube, and adjust the output I.F. transformer (No. 108-112B) to resonance.
   (b) With "Dummy 1" still connected, move oscillator output clip from grid of 6K7 to grid cap of 6A8G and adjust input I.F. transformer (No. 108-111B) to resonance.

SHORT WAVE BAND ALIGNMENT:
5.45 to 18.3 Megacycles

1. With band changing switch in the short wave position, extreme right of its rotation, and with external oscillator set at 16 megacycles and connected in series with "Dummy 3" to the antenna and ground leads, make the following adjustments:
   (a) Move dial pointer to 16 megacycles and adjust short wave oscillator trimmer to resonance.
   This adjustment is the trimmer mounted on the top of rear section of the variable gang condenser (see Fig. 1, top view, adjustment number 7).
   (b) Adjust short wave antenna trimmer (Adjustment Number 3), to resonance (see Fig. 3, bottom view).

BROADCAST BAND ALIGNMENT:
535 to 1720 Kilocycles

1. With band changing switch in the broadcast position, extreme left of its rotation, and with gang condenser in its minimum capacity position, plates entirely out of mesh, and with external oscillator connected in series with "Dummy 2" to antenna and ground leads make following adjustments:
   (a) Set external oscillator to 1720 K.C. and adjust broadcast oscillator trimmer to resonance. (Adjustment number 1, see bottom view of chassis, Fig. 3).
   (b) Re-set external oscillator to 1400 K.C., rotate variable gang condenser and pick up signal. Adjust broadcast antenna trimmer (adjustment number 2), to resonance.
   (c) Re-set external oscillator to 600 K.C., and adjust broadcast series pad (adjustment number 4), to resonance by rotating condenser to approximately 600 K.C., rocking it slowly to and fro until by adjusting series pad maximum output is attained. This adjustment is located on the bottom of the chassis directly under the variable gang condenser. (See bottom view of chassis, Fig. 3).
   (d) Repeat adjustments "a" and "c" until sensitivity is at its maximum.
   (e) Set external oscillator to 2100 K.C. (Image of 1170 K.C.) and tune in the signal at 1170 K.C. on the dial. Adjust the wire capacitor, (Adjustment number 6) by twisting the two wires until a **Minimum** output is obtained on output meter.
   (f) Set external oscillator to 2630 K.C. (Image of 1700 K.C.) and tune in the signal at 1700 K.C. on the dial. Adjust the wire capacitor (Adjustment number 5), by moving the wire either toward or away from the coil winding until a **Minimum** output is obtained on output meter.
   (g) Repeat adjustments (e) and (f) until the sensitivity is at a **Minimum.**
   (h) Recheck the broadcast antenna trimmer (Adjustment number 2).
   (i) Recheck the short wave antenna trimmer (Adjustment number 3).

MODEL 691 SERIES A (Serial No. J7850200 and up)

Voltages taken from different points of circuit to chassis are measured with volume control full on, all tubes in their sockets and speaker connected, with a volt meter having a resistance of 1000 ohms per volt. These voltages are clearly indicated on the circuit diagram.

IN ORDER TO PREVENT SIGNAL FROM ACTING UPON AVC AND AFFECTING ACCURACY OF VOLTAGE MEASUREMENTS, AERIAL AND GROUND LEADS SHOULD BE SHORT CIRCUITED WHILE MAKING MEASUREMENTS.

All voltages are to be measured with 115 volts on the primary of the power transformer.

DUMMY ANTENNAS:

The following dummy antennas are used in aligning and are referred to in the following alignment instructions as "Dummy 1", "Dummy 2", and "Dummy 3".

Dummy 1: (I.F.)—Consists of a .1 mfd. condenser connected in series with the external oscillator.

Dummy 2: (Broadcast)—Consists of a 200 mmfd. condenser and a 20 ohm resistor connected in series with each other and in series with the external oscillator.

Dummy 3: (Middle and Short Wave)—Consists of a .1 mfd. condenser and a 400 ohm resistor connected in series with each other and in series with the external oscillator.

ALIGNING I.F. TRANSFORMERS: (465 K.C.):

Part No. 108-110 Output I.F. Transformer
Part No. 108-109 Input I.F. Transformer
These I.F. transformers have two adjustments, both of which are accessible from the top of chassis (see top view).

1. With volume control full on, (the extreme right of its rotation), the band changing switch in the broadcast position (extreme left of its rotation), and with the variable condenser set to approximately 1400 kilocycles, make the following adjustments:
   (a) Connect external oscillator set at 465 kilocycles, in series with "Dummy 1", to the control grid cap of the type 6K7 tube, and adjust the output I.F. transformer (No. 108-110) to resonance.
   (b) With "Dummy 1" still connected, move oscillator output clip from grid of 6K7 to grid cap of 6L7 and adjust input I.F. transformer (No. 108-109) to resonance.

BROADCAST BAND ALIGNMENT:
535 to 1720 Kilocycles

1. With band changing switch in the broadcast position, extreme left of its rotation, and with gang condenser in its minimum capacity position, plates entirely out of mesh, and with external oscillator connected in series with "Dummy 2" to tan antenna lead and black ground lead, make following adjustments:
   (a) Set external oscillator to 1720 K.C. and adjust broadcast oscillator trimmer to resonance (adjustment number, 1; see bottom view of coil assembly. Fig. 3.)
   (b) Re-set external oscillator to 1550 K.C., rotate variable gang condenser and pick up signal. Adjust broadcast antenna trimmer (Adjustment number 4) to resonance; also adjust preselector trimmer which is mounted on the top of the rear section of the three gang variable tuning condenser to resonance. (See top view of chassis, Fig. 1, for location of this adjustment.)
   (c) Re-set external oscillator to 600 K.C., and adjust broadcast series pad to resonance by rotating condenser to approximately 600 K.C., rocking it slowly to and fro until by adjusting series pad maximum output is attained. This adjustment is located on the bottom of the chassis directly under the variable gang condenser. (See bottom view of chassis, Fig. 3.)
   (d) Repeat adjustments "a" and "b" until sensitivity is at its maximum.
   (e) Check for tracking and sensitivity at 1000 kilocycles. **Under no circumstances bend plates of variable condenser sections to correct tracking.**

SHORT WAVE BAND ALIGNMENT:
5.2 to 18.1 Megacycles

1. With band changing switch in the short wave position, extreme right of its rotation, and with external oscillator set at 17 megacycles and connected in series with "Dummy 3" to the tan antenna and black ground lead, make the following adjustments:
   (a) Move dial pointer to 17 megacycles and adjust short wave oscillator (Adjustment number 3) and short wave antenna (Adjustment number 6) to resonance.
   (b) Re-set external oscillator to 6 megacycles and pick up signal by rotating variable condenser and check sensitivity.
   (c) Re-set external oscillator and check set at 18.1 megacycles and 5.2 megacycles for band coverage.

NOTE: It is extremely necessary in making all of these adjustments that the fundamental oscillator signal be tuned in and not the image frequency which will fall below the fundamental. An example of this is an image of a fundamental 17 megacycle signal appears near 16.1 megacycles.

MIDDLE WAVE BAND ALIGNMENT:
1695 to 5500 Kilocycles

1. With band changing switch in the middle wave position, center of its rotation, and with external oscillator set at 5000 kilocycles and connected in series with "Dummy 3" to the tan antenna and black ground lead, make the following adjustments.
   (a) Move dial pointer to 5000 kilocycles and adjust middle wave oscillator (Adjustment number 2) and middle wave antenna (Adjustment number 5) to resonance.
   (b) Re-set external oscillator to 1800 kilocycles and pick up signal by rotating variable condenser and check sensitivity.
   (c) Re-set external oscillator and check set at 5500 kilocycles and 1695 kilocycles for band coverage.
   (d) Recheck broadcast band alignment.

©John F. Rider, Publisher

©John F. Rider, Publisher

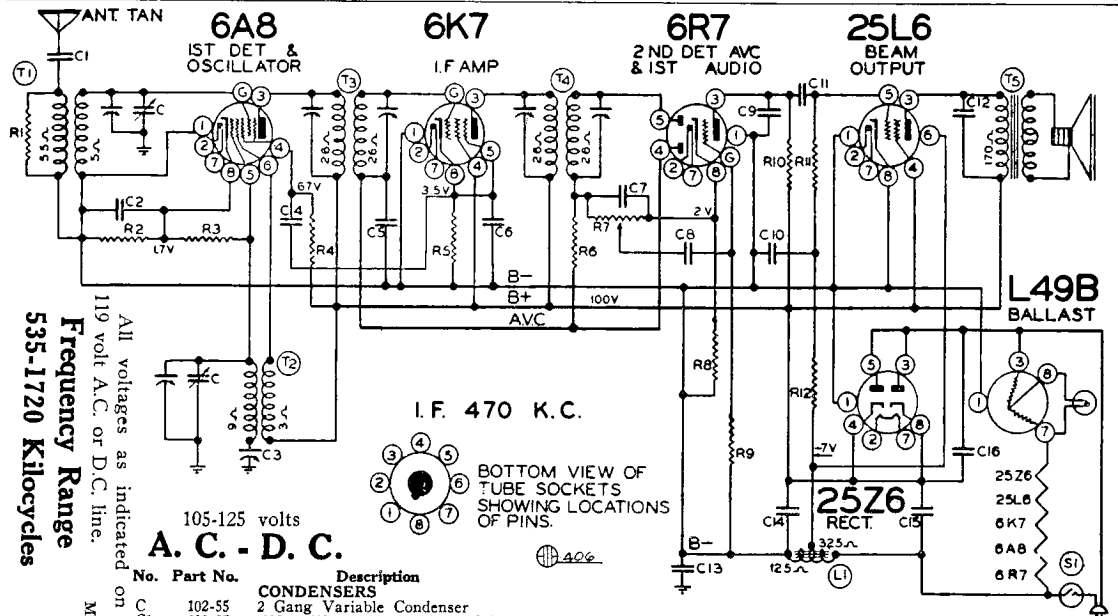

105-125 volts

A. C. - D. C.

All voltages as indicated on diagram are measured with 119 volt A.C. or D.C. line.

Frequency Range
535-1720 Kilocycles

No.	Part No.	Description	
		CONDENSERS	
C	102-55	2 Gang Variable Condenser	
C1	100-25	.002 x 600	25%
C2	100-22	.05 x 200	25%
C3	129-75	.0003386 Compression Type Condenser 1%	
C4	100-22	.05 x 200	25%
C5	100-9	.05 x 200	25%
C6	100-20	.1 x 200	25%
C7	129-21	.0002 Mica	20%
C8	100-11	.01 x 400	25%
C9	129-2	.0005 Mica	20%
C10	100-75	.22 x 200	10%
C11	100-10	.05 x 200	10%
C12	100-67	.025 x 400	25%
C13	100-53	.25 x 400	20%
C14	119-42	5. mfd. lytic 100 w. v.	
C15	119-42	20. mfd. lytic 100 w. v.	
C16	100-39	.1 x 400	20%
		RESISTORS	
R1	130-17	10M ohm — 1/3 w.	20%
R2	130-97	200 ohm — 1/3 w.	10%
R3	130-12	50M ohm — 1/3 w.	20%
R4	130-149	15M ohm — 1/3 w.	20%
R5	130-54	500 ohm — 1/3 w.	20%
R6	130-4	3 megohm — 1/3 w.	20%
R7	101-77	Volume Control (1 meg)	
R8	130-193	3M ohm — 1/3 w.	10%
R9	130-19	1 megohm — 1/3 w.	20%
R10	130-94	50M ohm — 1/3 w.	10%
R11	130-103	100M ohm — 1/3 w.	10%
R12	130-194	35M ohm — 1/3 w.	10%
		PARTS	
T1	111-79	Antenna Coil Complete	
T2	110-62	Oscillator Coil Complete	
T3	108-82B	Input I. F. Complete	
T4	108-83B	Output I. F. Complete	
T5	114-88	5" Dynamic Speaker	
L1		Speaker field 450 ohm— total tapped 125 ohm	
S1		Switch on volume control	

Mica condensers are coded with an additional dot indicating tolerance:

More Than	Tolerance percent	Color of Dot
20%	2½%	White
20%	5%	Green
15%	10%	Blue
10%	20%	Yellow
5%	More Than 20%	Red
None		None

Voltages taken from different points of circuit to chassis are measured with volume control full on, all tubes in their sockets and speaker connected, with a volt meter having a resistance of 1000 ohms per volt.

ALIGNING I.F. TRANSFORMERS: (470 K.C.):

Part No. 108-83B Output I.F. Transformer

Part No. 108-82B Input I.F. Transformer

These I.F. transformers have two adjustments, both of which are accessible from the top of chassis (see Fig. 1).

1. With volume control full on (the extreme right of its rotation), and with the variable condenser set to approximately 1400 kilocycles, make the following adjustments:
   (a) Connect external oscillator set at 470 kilocycles, in series with .1 mfd. condenser, to the control grid cap of the type 6K7G tube, and adjust the output I.F. transformer (No. 108-83B) to resonance.
   (b) Move oscillator output clip from grid of 6K7G to grid of 6A8G and adjust input I.F. transformer (No. 108-82B) to resonance.
   (c) With oscillator still connected to 6A8G, readjust output I.F. transformer (108-83B) if necessary.

R.F. ALIGNMENT: (535-1720 K.C.)

1. Unsolder the antenna wire from its terminal on the antenna coil and with gang condenser in its minimum capacity position, plates entirely out of mesh, connect an external oscillator in series with a 50 mmf. condenser to the antenna terminal on the antenna coil and chassis ground and make the following adjustments:
   (a) With external oscillator set at 1720 kilocycles, adjust oscillator trimmer to resonance. This adjustment is on the top of rear section of variable gang condenser. (See Fig. 1).
   (b) Re-set external oscillator to 1400 kilocycles, rotate condenser, pick up oscillator signal and adjust antenna trimmer to resonance. (Top of front section of gang condenser).
   (c) Check sensitivity at 600 and 1000 kilocycles.

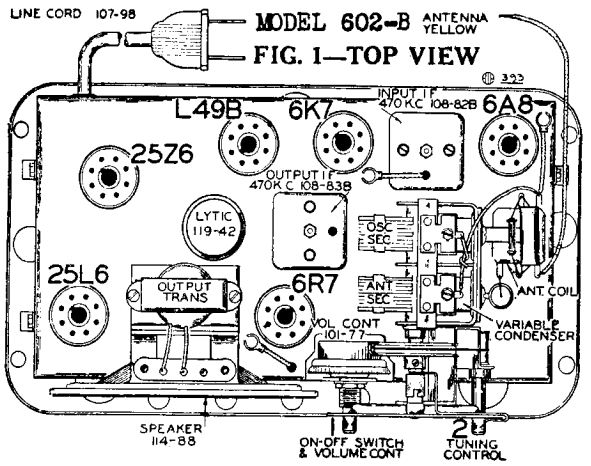

MODEL 602C (Serial No. 878500 and up)

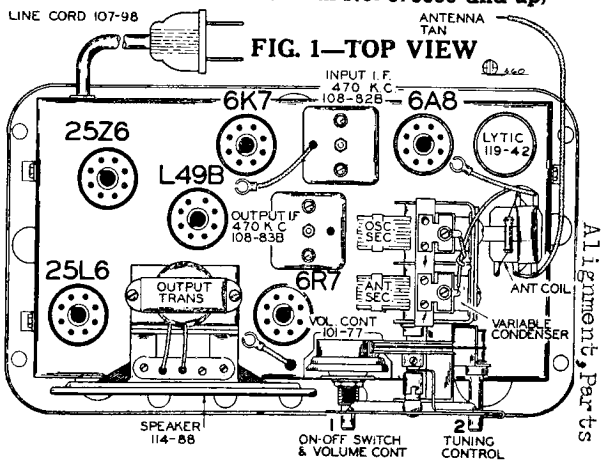

MODEL 761 Series A
Schematic, Voltage
Socket, Trimmers
Parts

BELMONT RADIO CORP.

For conventional types of antennas connect the **tan** wire to the antenna lead and the **yellow with black tracer** and the **black** wire together to the ground lead.

When a doublet antenna is used connect the **tan** wire and **the yellow with black tracer** wire to the **doublet antenna** and the solid black wire to the ground lead. (See Fig. 1—Top View, page 2).

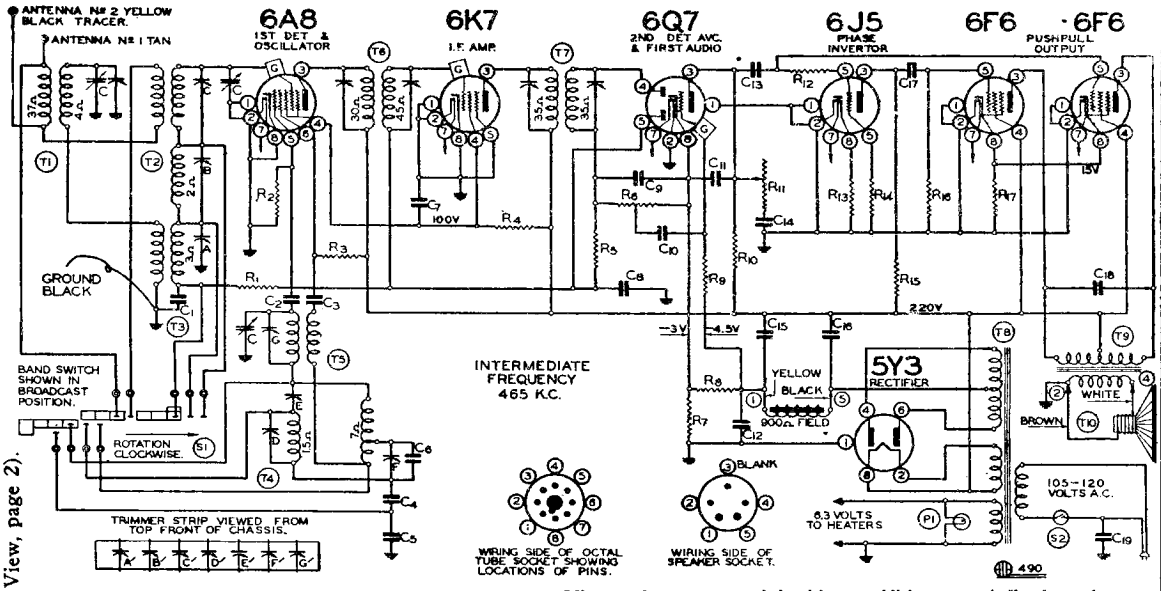

Code No.	Part No.	Description
		RESISTORS
R1	130-103	100M ohm - 1/3 w. 10%
R2	130-12	50M ohm - 1/3 w. 20%
R3	130-123	15M ohm - 1/2 w. 10%
R4	130-196	30M ohm - 1 w. 10%
R5	130-4	3 megohm - 1/3 w. 20%
R6	101-104	1 megohm volume control
R7	130-198	40 ohm - 1/2 w. 10%
R8	130-197	20 ohm - 1/3 w. 10%
R9	130-4	3 megohm - 1/3 w. 20%
R10	130-103	100M ohm - 1/3 w. 10%
R11	101-105	300M ohm - tone control
R12	130-163	400M ohm - 1/3 w. 10%
R13	130-22	5M ohm - 1/3 w. 20%
R14	130-103	100M ohm - 1/3 w. 10%
R15	130-12	50M ohm - 1/3 w. 20%
R16	130-102	500M ohm - 1/3 w. 10%
R17	130-195	250 ohm - 1.2 w. 10%
		CONDENSERS
C	102-62	3 gang variable
C1	100-22	.05 x 200 v. 25%
C2	129-67	.00004 Mica 10%
C3	100-25	.002 x 600 v. 25%
C4	129-83	.0027 Mica 2-1/2%
C5	129-84	.003 Mica 2-1/2%
C6	129-88	.0006 Mica 5%

Code No.	Part No.	Description
C7	100-39	.1 x 400 v. 20%
C8	100-26	.02 x 400 v. 25%
C9	129-5	.0001 Mica 20%
C10	100-26	.02 x 400 v. 25%
C11	129-2	.0005 Mica 20%
C12	100-20	.1 x 200 v. 25%
C13	100-26	.02 x 400 v. 25%
C14	100-57	.006 x 600 v. ± 10 - 20%
C15	103-14	16 mfd. lytic 275 w.v. Reg.
C16	103-6	8 mfd. lytic 350 w.v.
C17	100-26	.02 x 400 v. 25%
C18	100-37	.003 x 600 v. 10%
C19	100-61	.02 x 600 v. bakelite 20%
		PARTS
T1	111-88	B.C. Pre-Selector Coil complete
T2	111-87	S.W.M.W. Antenna Coil Complete
T3	111-86	B.C. Antenna Coil Complete
T4	110-69	M.W. Oscillator Coil Complete
T5	110-70	S.W. B.C. Oscillator Coil Complete
T6	108-105	Input I.F. 465 kc. Complete
T7	108-106E	Output I.F. 465 kc. Complete
T8	104-87C	Power Transformer
T9	105-58	Output Transformer
T10	114-109	6" dynamic speaker (900 Ohm Field)
S1	125-45	Wave change switch
S2		Off-on switch on tone control
P1	107-94	6-8 volt pilot light

Mica condensers are coded with an additional dot indicating tolerance:

Color of Dot	Tolerance percent
White	2½ %
Green	5%
Blue	10%
Yellow	15%
Red	20%
None	More Than 20%

FREQUENCY RANGE
540 to 1750 K.C. (Kilocycles)
1730 to 5800 K.C. (Kilocycles)
5.5 to 18.1 M.C. (Megacycles)

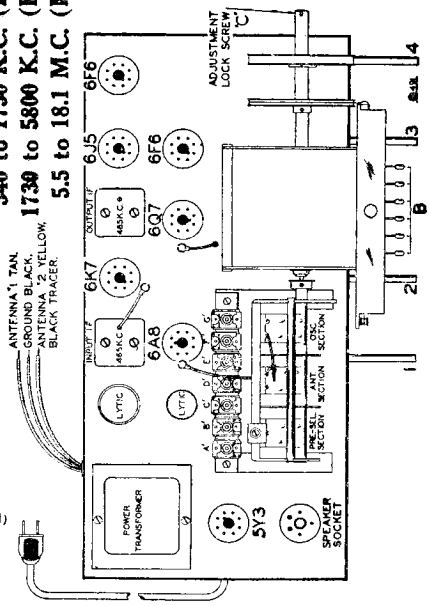

FIG. 1—TOP VIEW

Voltages taken from different points of circuit to chassis are measured with volume control full on, all tubes in their sockets and speaker connected, with a volt meter having a resistance of 1000 ohms per volt. These voltages are clearly indicated on the circuit diagram.

IN ORDER TO PREVENT SIGNAL FROM ACTING UPON AVC AND AFFECTING ACCURACY OF VOLTAGE MEASUREMENTS, AERIAL AND GROUND LEADS SHOULD BE SHORT CIRCUITED WHILE MAKING MEASUREMENTS.

All voltages are to be measured with 115 volts on the primary of the power transformer.

Receivers of this model which are to be used on voltages or frequencies other than 105-115 volts, 60 cycles are so marked. The power consumption of this receiver is 75 watts.

FOR ALIGNMENT SEE INDEX

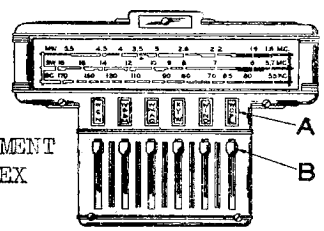

FIG. 2—FRONT VIEW

CHASSIS MODEL 761

SERIES A — **3-Band All-Wave A.C. Superheterodyne Receiver** (Serial No. 8A973750 and up)

©John F. Rider, Publisher

MODEL 823
Schematic, Voltage
Socket, Trimmers
Parts

BELMONT RADIO CORP.

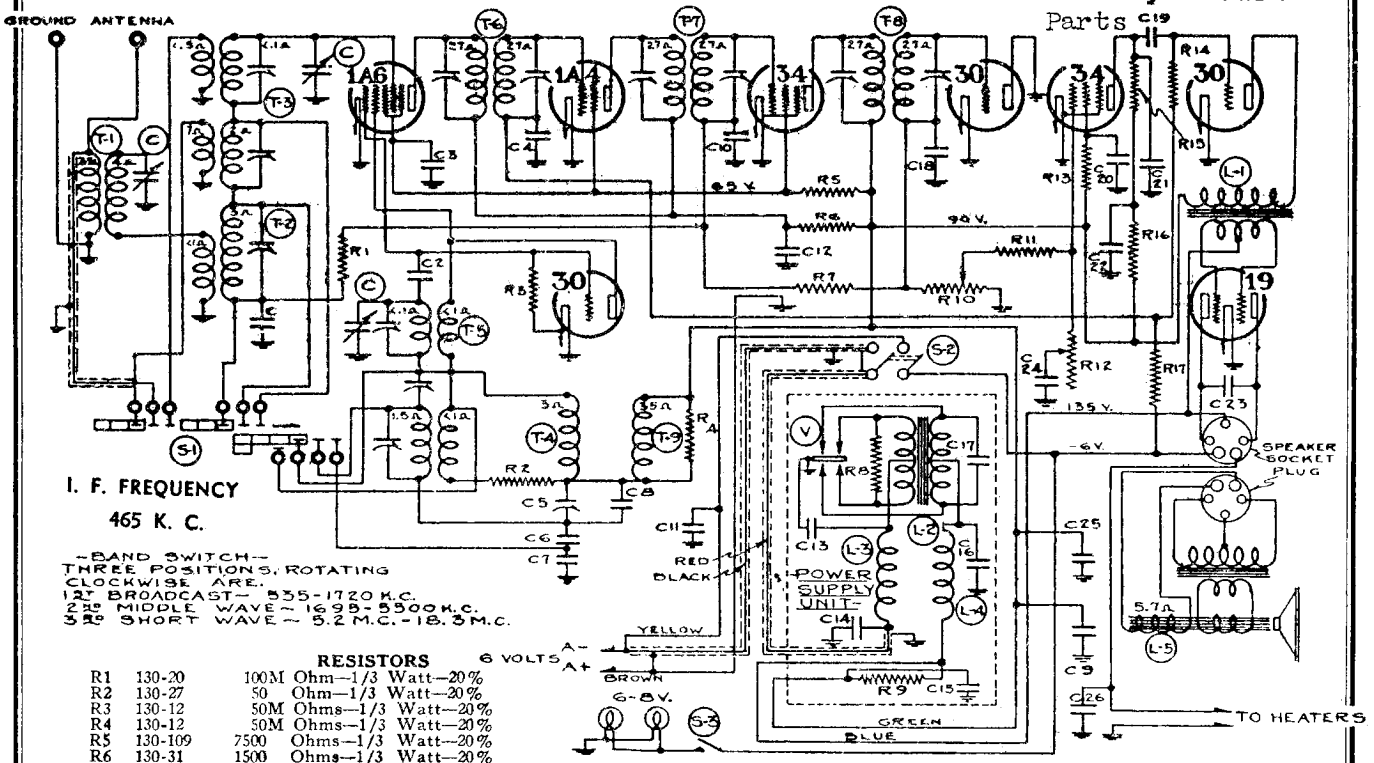

RESISTORS

R1	130-20	100M Ohm—1/3 Watt—20%
R2	130-27	50 Ohm—1/3 Watt—20%
R3	130-12	50M Ohms—1/3 Watt—20%
R4	130-12	50M Ohms—1/3 Watt—20%
R5	130-109	7500 Ohms—1/3 Watt—20%
R6	130-31	1500 Ohms—1/3 Watt—20%
R7	130-19	1 Meg Ohm—1/3 Watt—20%
R8	130-84	200 Ohms—1/3 Watt—20%
R9	130-115	3M Ohms—1 Watt—20%
R10	101-50	250M Ohms—Volume Control
R11	130-12	50M Ohms—1/3 Watt—20%
R12	101-51	300M Ohms—Tone Control
R13	130-19	1 Meg Ohm—1/3 Watt—20%
R14	130-19	1 Meg Ohm—1/3 Watt—20%
R15	130-11	250M Ohms—1/3 Watt—20%
R16	130-20	100M Ohms—1/3 Watt—20%
R17	130-19	1 Meg Ohm—1/3 Watt—20%

CONDENSERS

C1	100-22	.05 x 200 V.—20%
C2	129-50	.00004 Mica —30%
C3	100-6	.25 x 200 V.—20%
C4	100-6	.25 x 200 V.—20%
C5	124-28	130 mmf. Adjustable Pad
C6	129-55	.0034 Mica—2½%
C7	129-54	.003 Mica—2½%
C8	129-65	.00055 Mica—5%
C9	103-11	8 mfd. x 200 V. Lytic
C10	100-22	.05 x 200 V.—20%
C11	100-20	.1 x 200 V.—25%
C12	100-20	.1 x 200 V.—25%
C13	100-35	.5 mfd. x 200 V.—10%-50%
C14	100-35	.5 mfd. x 200 V.—10%-50%
C15	100-20	.1 x 200 V.—25%
C16	119-26	8 mfd. Lytic—200 V.
C17	100-38	.01 x 800 V.—10%
C18	129-12	.00025 Mica—20%
C19	100-11	.01 x 400 V.—25%
C20	100-22	.05 x 200 V.—20%
C21	129-5	.0001 Mica—20%
C22	100-20	.1 x 200 V.—25%
C23	100-25	.002—600 V.—25%
C24	100-11	.01 x 400 V.—25%
C25	100-6B	.25 x 200 V.—20%
C26	100-5B	1.0 x 120 V.—50%—10%

PARTS

C	102-28	One Section of 3 Gang Condenser
T1	111-51	B. C. - Pre Selector Coil
T2	111-49	Broadcast Antenna Coil
T3	111-50	M. W. S. W. Antenna Coil
T4	110-38	B. C. Oscillator Coil
T5	110-39	M. W. S. W. Oscillator Coil
T6	108-77	Input I. F. - 465 Kc.
T7	108-78	Interstage I. F. - 465 Kc.
T8	108-79	Output I. F. - 465 Kc.
T9	123-3	R. F. Choke Coil
L1	105-28	Audio Input Transformer
L2	104-61	Power Transformer
L3	105-19	"A" Choke
L4	123-3	R. F. Choke Coil
L5	114-40	6" Speaker (Field Resistance 5.7 Ohms)
S1	125-17	Band Switch
S2	101-50	On Volume Control
S3		On Tuning Shaft
V	126-4	Vibrator

BATTERY CONNECTIONS:

Connect the yellow lead marked A negative (—) to the negative (—) post of the storage battery.

Connect the brown lead marked A positive (+) to the positive (+) post of the storage battery.

TUBES:

The tube complement of this chassis is as follows:

1—Type 1A6 Pentagrid Mixer, First Detector.
1—Type 1A4 Tetrode First I.F. Amplifier (465 K.C.)
1—Type 34 Remote Cut-Off Pentode, 2nd I.F. Amplifier (465 K.C.)
1—Type 30 Oscillator.
1—Type 30 Second Detector and A. V. C.
1—Type 34 A.F. Amplifier.
1—Type 30 Driver Amplifier.
1—Type 19 Class "B" Push-Pull Output Amplifier.

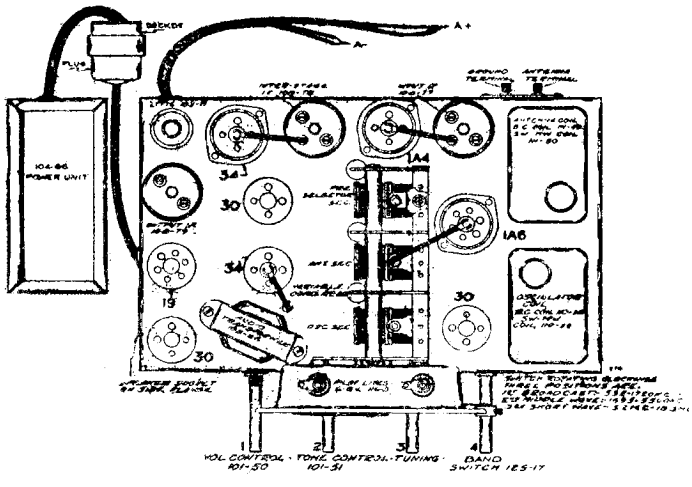

TOP VIEW

©John F. Rider, Publisher

MODEL 823
Alignment, Trimmers

BELMONT RADIO CORP.

SERVICE NOTES:

Voltages taken from different points of circuit to chassis are measured with volume control full on, all tubes in their sockets and speaker connected, with a volt meter having a resistance of 1000 ohms per volt. These voltages are clearly indicated on the circuit diagram.

In order to prevent signal from acting upon A. V. C. and affecting accuracy of voltage measurements, aerial and ground leads should be short circuited while making measurements.

All voltages are to be measured with 6.3 volts input to receiver. Resistances of coils and transformer windings are indicated in ohms on the schematic circuit diagram.

DUMMY ANTENNAS:

The following dummy antennas are used in aligning and are referred to in the following alignment instructions as "Dummy 1", "Dummy 2", and "Dummy 3".

Dummy 1: (I.F.)—Consists of a .1 mfd. condenser connected in series with the external oscillator.

Dummy 2: (Broadcast)—Consists of a 200 mmfd. condenser and a 20 ohm resistor connected in series with each other and in series with the external oscillator.

Dummy 3: (Middle and Short Wave)—Consists of a .1 mfd. condenser and a 400 ohm resistor connected in series with each other and in series with the external oscillator.

ALIGNING I.F. TRANSFORMERS: (465 K.C.):

Part No. 108-79 Output I.F. Transformer
Part No. 108-78 Interstage I.F. Transformer
Part No. 108-77 Input I.F. Transformer

These I.F. transformers have two adjustments, both of which are accessible from the top of chassis (see top view).

1. With volume control full on, (the extreme right of its rotation), the band changing switch in the broadcast position, (extreme left of its rotation), and with the variable condenser set to approximately 1400 kilocycles, make the following adjustments:

   (a) Connect external oscillator set at 465 kilocycles, in series with "Dummy 1", to the control grid cap of the type 34 tube, and adjust the output I.F. transformer (No. 108-79) to resonance.

   (b) With "Dummy 1" still connected, move oscillator output clip from grid of 34 to grid cap to 1A4 and adjust interstage I.F. transformer (No. 108-78) to resonance.

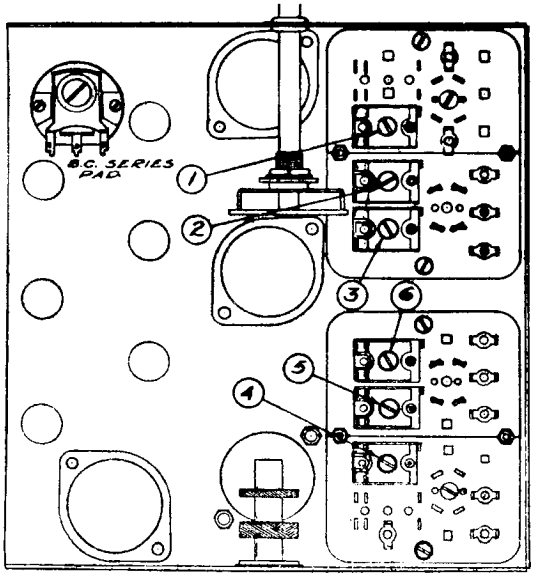

BOTTOM VIEW SHOWING TRIMMERS

   (c) Move oscillator to grid cap of 1A6 and adjust input I.F. transformer (No. 108-77).

BROADCAST BAND ALIGNMENT:

535 to 1720 Kilocycles

1. With band changing switch in the broadcast position, extreme left of its rotation, and with gang condenser in its minimum capacity position, plates entirely out of mesh, and with external oscillator connected in series with "Dummy 2" to antenna and ground posts, make following adjustments:

   (a) Set external oscillator to 1720 K.C. and adjust broadcast oscillator trimmer to resonance. (Adjustment number 1; see bottom view of coil assembly, Fig. 3).

   (b) Re-set external oscillator to 1550 K.C., rotate variable gang condenser and pick up signal. Adjust broadcast antenna trimmer (adjustment number 4) to resonance; also adjust preselector trimmer which is mounted on the top of the rear section of the three gang variable tuning condenser to resonance. (See top view of chassis, Fig. 1, for location of this adjustment).

   (c) Re-set external oscillator to 600 K.C., and adjust broadcast series pad to resonance by rotating condenser to approximately 600 K.C., rocking it slowly to and fro until by adjusting series pad maximum output is attained. This adjustment is located on the bottom of the chassis directly under the variable gang condenser. (See bottom view of chassis, Fig. 3).

   (d) Repeat adjustments "a" and "b" until sensitivity is at its maximum.

   (e) Check for tracking and sensitivity at 1000 kilocycles. **Under no circumstances bend plates of variable condenser sections to correct tracking.**

SHORT WAVE BAND ALIGNMENT:

5.2 to 18.3 Megacycles

1. With band changing switch in the short wave position, extreme right of its rotation, and with external oscillator set at 17 megacycles and connected in series with "Dummy 3" to the antenna and ground posts, make the following adjustments:

   (a) Move dial pointer to 17 megacycles and adjust short wave oscillator (adjustment number 3) and short wave antenna (adjustment number 6) to resonance.

   (b) Re-set external oscillator to 6 megacycles and pick up signal by rotating variable condenser and check sensitivity.

   (c) Re-set external oscillator and check set at 18.1 megacycles and 5.3 megacycles for band coverage.

NOTE: It is extremely necessary in making all of these adjustments that the fundamental oscillator signal be tuned in and not the image frequency which will fall below the fundamental on the receiver dial. As an example of this a fundamental 18.3 megacycle signal can be tuned in not only at 18.3 on the dial but also at approximately 17.4 megacycles.

MIDDLE WAVE BAND ALIGNMENT:

1695 to 5500 Kilocycles

1. With band changing switch in the middle wave position, center of its rotation, and with external oscillator set at 5000 kilocycles and connected in series with "Dummy 3" to the antenna and ground posts make the following adjustments:

   (a) Move dial pointer to 5000 kilocycles and adjust middle wave oscillator (adjustment number 2) and middle wave antenna (adjustment number 5) to resonance.

   (b) Re-set external oscillator to 1800 kilocycles and pick up signal by rotating variable condenser and check sensitivity.

   (c) Re-set external oscillator and check set at 5400 kilocycles and 1700 kilocycles for band coverage.

©John F. Rider, Publisher

MODEL 842 Series A
Schematic, Voltage
Socket, Trimmers
Parts

BELMONT RADIO CORP.

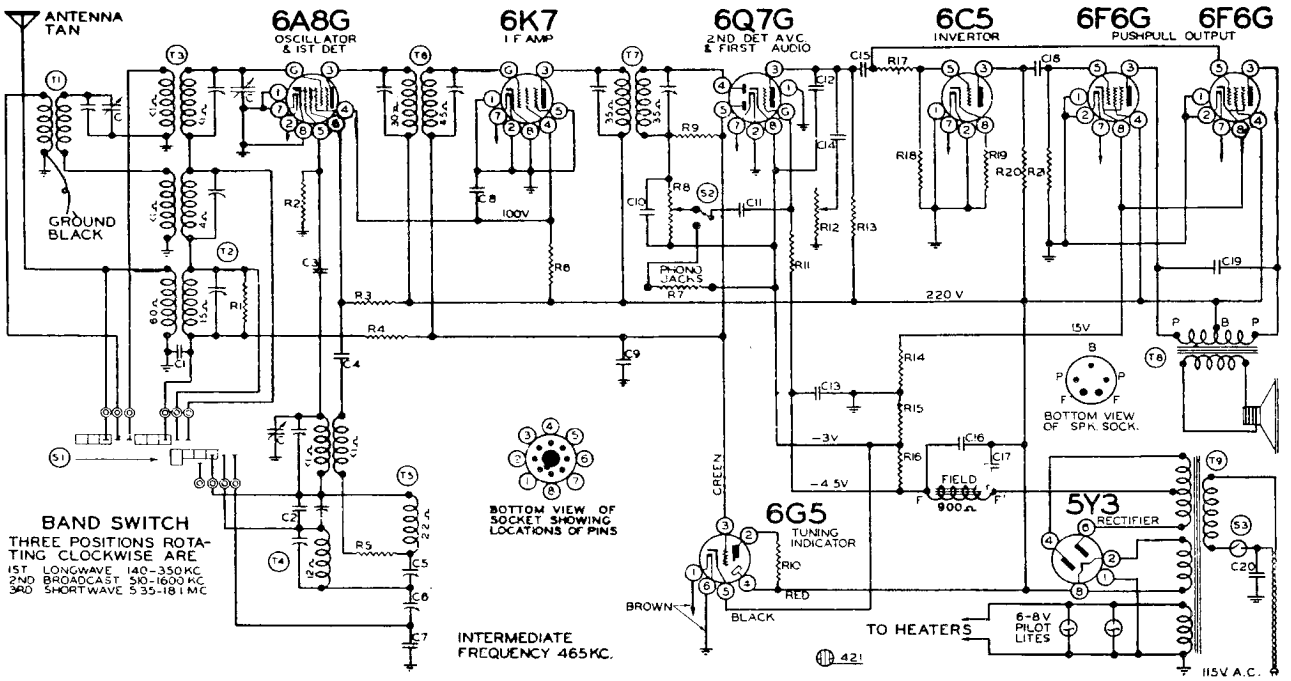

MODEL 842

SERIES A

(Serial No. 7H830700 and up)

R-1	130-3		500M Ohm
R-2	130-12		50M Ohm
R-3	130-48		15M Ohm
R-4	130-103		100M Ohm
R-5	130-27		50 Ohm
R-6	130-96		25M Ohm
R-7	130-103		100M Ohm
R-8	101-74	Volume Control	1 meg Ohm
R-9	130-4		3 meg Ohm
R-10	130-110	In Tuning Indicator Socket	1 meg Ohm
R-11	130-4		3 meg Ohm
R-12	101-75	Tone Control	300M Ohm
R-13	130-103		100M Ohm
R-14	106-37	Resistor Strip	250 Ohm
R-15	106-37	Resistor Strip	42 Ohm
R-16	106-37	Resistor Strip	20 Ohm
R-17	130-163		400M Ohm
R-18	130-103		100M Ohm
R-19	130-22		5M Ohm
R-20	130-12		50M Ohm
R-21	130-100		150M Ohm

NOTE—R-14, R-15, and R-16 in one unit, part 106-37

C	102-47	3 Gang Variable	
C-1	100-22		.05
C-2	129-67	Mica	.00004
C-3	129-39	Mica	.00005
C-4	100-12		.003
C-5	124-31	Adj. Padder	300 mmf.
C-6	124-32	Adj. Padder	565 mmf.
C-7	129-54	Mica	.003
C-8	100-39		.1
C-9	100-22		.05
C-10	129-5	Mica	.0001
C-11	100-11		.01
C-12	129-2	Mica	.0005
C-13	100-20		.1
C-14	100-57		.006
C-15	100-26		.02
C-16	103-14	Lytic Filter	16 mfd.
C-17	103-6	Lytic Filter	8 mfd.
C-18	100-26		.02
C-19	100-12		.003
C-20	100-61	(Bakelite Case, Type)	.02

PARTS

T-1	111-62	B.C. Pre Selector
T-2	111-61	L.W. Ant. Coil Assembly
T-3	111-64	B.C. S.W. Ant. Coil Assembly.
T-4	110-49	B.C. S.W. Osc. Coil Assembly
T-5	110-47	L.W. Osc. Coil Assembly
T-6	108-105	Input I.F. — 465 K.c.
T-7	108-106	Output I.F. — 465 K.c.
T-8	114-66	6" Dynamic Speaker (900 Ohm Field)
T-9	104-96	Power Transformer 40 Cycle—Universal
S-1	125-17	Band Switch
S-2	125-22	Phono Switch
S-3		On-Off Switch on Volume Control

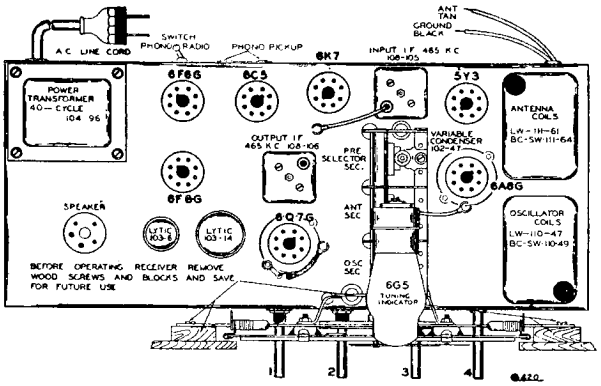

FIG. 1—TOP VIEW

BAND FREQUENCY RANGE

DIAL SCALE

Long Wave....Outer Scale..350 to 140 K.C. (Kilocycles) 860-2150 Meters

Medium Wave . Center Scale .1600 to 510 K.C. (Kilocycles) 187-588 Meters

Short Wave ....Inner Scale..18.1 to 5.35 M.C. (Megacycles) 16.5-56.5 Meters

©John F. Rider, Publisher

MODEL 842 Series A
Alignment, Trimmers

BELMONT RADIO CORP.

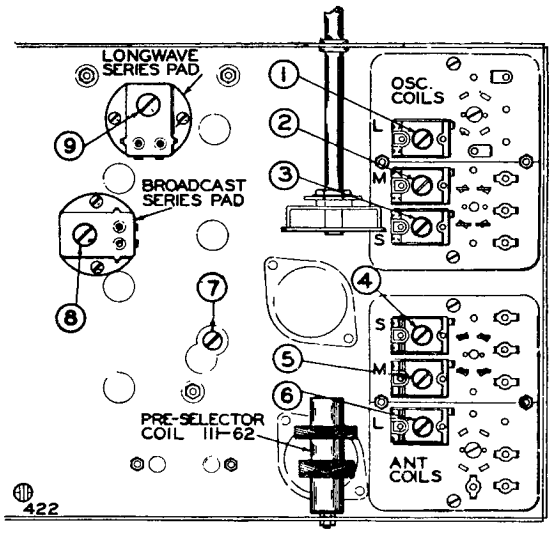

FIG. 3—BOTTOM VIEW SHOWING TRIMMERS

DUMMY ANTENNAS:

The following dummy antennas are used in aligning the receiver, and are referred to in the following alignment instructions as "Dummy 1," "Dummy 2," and "Dummy 3."

Dummy 1: (I.F.)—Consists of a .1 mfd. condenser connected in series with the external oscillator.

Dummy 2: (Medium and long wave) — Consists of a 200 mmfd. condenser and a 20 ohm resistor connected in series with each other and in series with the external oscillator.

Dummy 3: (Short Wave)—Consists of a .1 mfd. condenser and a 400 ohm resistor connected in series with each other and in series with the external oscillator.

ALIGNING I.F. TRANSFORMERS: (465 K.C.) (645.1 METERS)

Part No. 108-106 Output I.F. Transformer
Part No. 108-105 Input I.F. Transformer

These I.F. transformers have two adjustments, both of which are accessible from the top of chassis (see top view).

1. With volume control full on, (the extreme right of its rotation), the band changing switch in the medium position, (center of its rotation), and with the variable condenser set to minimum capacity make the following adjustments:
   (a) Connect external oscillator set at 465 kilocycles, in series with 'Dummy 1", to the control grid cap of the type 6K7 tube, and adjust the output I.F. transformer (No. 108-106) to resonance.
   (b) With "Dummy 1" still connected, move oscillator output clip from grid of 6K7 to grid cap of 6A8G and adjust input I.F. transformer (No. 108-105) to resonance.

SHORT WAVE BAND ALIGNMENT:

16.5 Meters (18.1 Mc) to 56.5 Meters (5.35 Mc).

1. With band changing switch in the short wave position, extreme right of its rotation, and with external oscillator set at 17 megacycles (17.6 meters) and connected in series with "Dummy 3" to the tan antenna and black ground lead, make the following adjustments:
   (a) Move dial pointer to 17 megacycles (17.6 meters) and adjust short wave oscillator (Adjustment number 3) and short wave antenna (Adjustment number 4) to resonance.
   (b) Re-set external oscillator to 6 megacycles (50 meters) and pick up signal by rotating variable condenser and check sensitivity.
   (c) Re-set external oscillator and check set at 18.1 megacycles (16.5 meters) and 5.3 megacycles (56.5 meters) for band coverage.

NOTE: It is extremely necessary in making all of these adjustments that the fundamental oscillator signal be tuned in and not the image frequency which will fall below the fundamental. An example of this is an image of a fundamental 17 megacycle signal appears near 16.1 megacycles.

MEDIUM BAND ALIGNMENT:

588 Meters (510 K.C.) to 187 Meters (1600 K.C.)

1. With band changing switch in the medium wave position, center of its rotation, and with gang condenser in its minimum capacity position, plates entirely out of mesh, and with external oscillator connected in series with "Dummy 2" to tan antenna lead and black ground lead, make following adjustments.
   (a) Set external oscillator to 187 meters (1600 K.C.) and adjust medium wave oscillator trimmer to resonance (adjustment number 2; see bottom view of coil assembly. Fig. 3.)
   (b) Re-set external oscillator to 214 meters (1400 K.C.), rotate variable gang condenser and pick up signal. Adjust medium wave antenna trimmer (Adjustment number 5) to resonance; also adjust preselector trimmer condenser to resonance, (Adjustment number 7; see Bottom View, Fig. 3).
   (c) Re-set external oscillator to 500 meters (600 K.C.), and adjust medium wave series pad to resonance by rotating condenser to approximately 600 K.C., rocking it slowly to and fro until by adjusting series pad maximum output is attained. This adjustment is located on the bottom of the chassis directly under the variable gang condenser. (See bottom view of chassis, Fig. 3, Adjustment 8).
   (d) Repeat adjustments "a" and "b" until sensitivity is at its maximum.
   (e) Check for tracking and sensitivity at 300 meters (1000 K.C.) **Under no circumstances bend plates of variable condenser sections to correct tracking.**

IMPORTANT: This band must be completely rechecked after the long wave band has been adjusted.

LONG WAVE BAND ALIGNMENT:

860 Meters (350 K.C.) to 2150 Meters (140 K.C.)

1. With band changing switch in the long wave position, extreme left of its rotation, and with gang condenser in its minimum capacity position, plates entirely out of mesh, and with external oscillator connected in series with "Dummy 2" to tan antenna lead and black ground lead, make following adjustments:
   (a) Set external oscillator to 860 meters (350 K.C.), and adjust long wave oscillator trimmer to resonance (adjustment number 1; see bottom view of coil assembly. Fig. 3.)
   (b) Re-set external oscillator to 925 meters (325 K.C.), rotate variable gang condenser and pick up signal. Adjust long wave antenna trimmer (Adjustment number 6) to resonance.
   (c) Re-set external oscillator to 2000 meters (150 K.C.), and adjust long wave series pad to resonance by rotating condenser to approximately 2000 meters, rocking it slowly to and fro until by adjusting series pad maximum output is attained. This adjustment is located on the bottom of the chassis directly under the variable gang condenser. (See bottom view of chassis, Fig. 3, Adjustment 9).
   (d) Repeat adjustments "a" and "b" until sensitivity is at its maximum.

IMPORTANT: This band must be completely rechecked after the medium wave band has been rechecked.

©John F. Rider, Publisher

BELMONT RADIO CORP.

MODEL 860 Series A
Schematic, Voltage
Socket, Trimmers
Parts

For conventional types of antennas connect the **yellow** wire to the antenna lead and the **yellow with black tracer** and the **black** wire together to the ground lead.

When a doublet antenna is used connect the **yellow** wire and the **yellow with black tracer** wire to the doublet antenna and the solid **black** wire to the ground lead. (See Fig. 1—Top View, page 2).

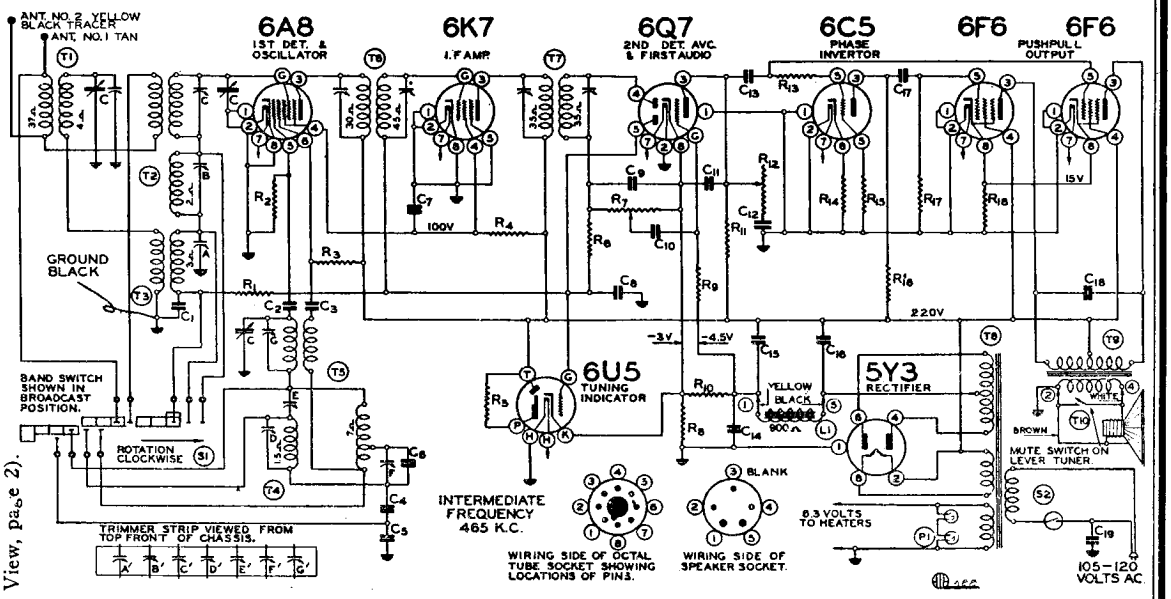

Code No.	Part No.	Description
		RESISTORS
R1	130-103	100M ohm - 1/3 w. 10%
R2	130-12	50M ohm - 1/3 w. 20%
R3	130-123	15M ohm - 1/2 w. 10%
R4	130-196	30M ohm - 1 w. 10%
R5	130-110	1 megohm - 1/10 w. 20% In tuning indicator socket
R6	130-4	3 megohm -1/3 w. 20%
R7	101-97	1 megohm volume control
R8	130-198	40 ohm - 1/2 w. 10%
R9	130-4	3 megohm - 1/3 w. 20%
R10	130-197	20 ohm - 1/3 w. 10%
R11	130-103	100M ohm - 1/3 w. 10%
R12	101-98	300M ohm - tone control
R13	130-163	400M ohm - 1/3 w. 10%
R14	130-22	5M ohm - 1/3 w. 20%
R15	130-103	100M ohm - 1/3 w. 10%
R16	130-12	50M ohm - 1/3 w. 20%
R17	130-102	500M ohm - 1/3 w. 10%
R18	130-195	250 ohm - 1.2 w. 10%
		CONDENSERS
C	102-62	3 gang variable
C1	100-22	.05 x 200 v. - 25%
C2	129-67	.00004 Mica 10%
C3	100-25	.002 x 600 v. 25%
C4	129-83	.0027 Mica 2-1/2%
C5	129-84	.003 Mica 2-1/2%
C6	129-88	.0006 Mica 5%
C7	100-1	.1 x 400 v. - 50 - 10%
C8	100-26	.02 x 400 v. 25%
C9	129-5	.0001 Mica 20%
C10	100-26	.02 x 400 v. 25%
C11	129-2	.0005 Mica 20%
C12	100-57	.006 x 600 v. - 10 - 20%
C13	100-26	.02 x 400 v. 25%
C14	100-20	.1 x 200 v. 25%
C15	103-14	16 mfd. Regulating Lytic - 275 w.v.
C16	103-6	8 mfd. Lytic - 350 w.v.
C17	100-26	.02 x 400 v. 25%
C18	100-37	.003 x 600 v. 10%
C19	100-61	.02 x 600 v. 20% Bakelite
		PARTS
T1	111-88	B.C. Pre-selector complete
T2	111-87	S.W.M.W. Antenna Coil - complete
T3	111-86	B.C. Antenna Coil Complete
T4	110-69	M.W. Osc. Coil Complete
T5	110-70	S.W.B.C. Osc. Coil Complete
T6	108-105D	Input I.F. Coil - complete 465 kc.
T7	108-106E	Output I.F. Coil - complete 465 kc.
T8	104-87B	Power Transformer
T9	105-54	Output Transformer
T10	114-99	10" Dynamic speaker
L1		900 ohm speaker field
S1	125-42	Wave change switch
S2		Off-on switch on tone control
P1	107-94	6-8 volt pilot light

Voltages taken from different points of circuit to chassis are measured with volume control full on, all tubes in their sockets and speaker connected, with a volt meter having a resistance of 1000 ohms per volt. These voltages are clearly indicated on the circuit diagram.

IN ORDER TO PREVENT SIGNAL FROM ACTING UPON AVC AND AFFECTING ACCURACY OF VOLTAGE MEASUREMENTS, AERIAL AND GROUND LEADS SHOULD BE SHORT CIRCUITED WHILE MAKING MEASUREMENTS.

All voltages are to be measured with 115 volts on the primary of the power transformer.

Receivers of this model which are to be used on voltages or frequencies other than 105-115 volts, 60 cycles are so marked. The power consumption of this receiver is 75 watts.

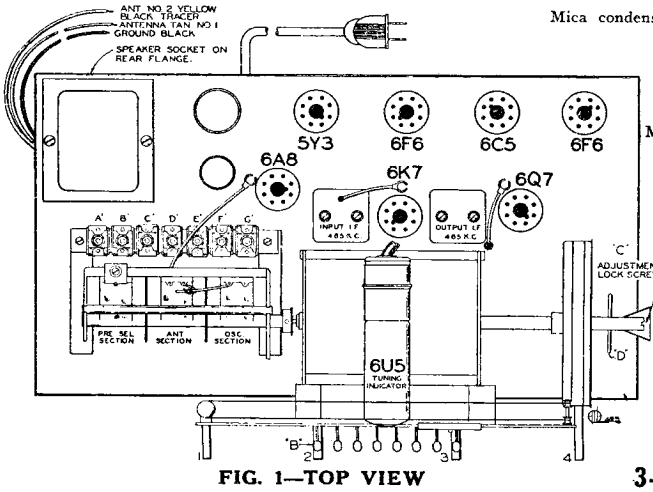

FIG. 1—TOP VIEW

Mica condensers are coded with an additional dot indicating tolerance:

Tolerance percent	Color of Dot
2½%	White
5%	Green
10%	Blue
15%	Yellow
20%	Red
More Than 20%	None

FREQUENCY RANGE
540 to 1750 K.C.
1730 to 5800 K.C.
5.5 to 18.1 M.C.

CHASSIS
MODEL 860
Series A

(Serial No. 7L897400 and up)

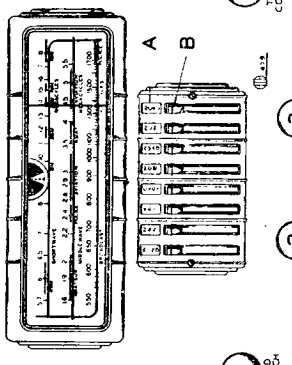

FIG. 2—FRONT VIEW

3-Band All-Wave A.C. Superheterodyne Receiver

©John F. Rider, Publisher

MODEL 761
MODEL 860
Alignment, Tuner

BELMONT RADIO CORP.

TO REMOVE THE CHASSIS FROM THE CABINET:
Remove the four bolts which are used to fasten the chassis to the cabinet shelf; pull the knobs off their shafts and pull off the six button lever keys on front of dial.

MODEL 761
Series A **(Serial No. 8A973750 and up)**

DUMMY ANTENNAS:
The following dummy antennas are used in aligning and are referred to in the following alignment instructions as "Dummy 1", "Dummy 2", and "Dummy 3".
Dummy 1: (I.F.)—Consists of a .1 mfd. condenser connected in series with the external oscillator.
Dummy 2: (Broadcast)—Consists of a 200 mmfd. condenser and a 20 ohm resistor connected in series with each other and in series with the external oscillator.
Dummy 3: (Middle and Short Wave)—Consists of a .1 mfd. condenser and a 400 ohm resistor connected in series with each other and in series with the external oscillator.

ALIGNING I.F. TRANSFORMERS: (465 K.C.):
Part No. 108-106E Output I.F. Transformer
Part No. 108-105 Input I.F. Transformer

These I. F. transformers have two adjustments, both of which are accessible from the top of chassis (see top view, Fig. 1).
1. With volume control full on, (the extreme right of its rotation), the band changing switch in the broadcast position, (extreme left of its rotation), and with the variable condenser set to approximately 1400 kilocycles, make the following adjustments:
   (a) Connect external oscillator set at 465 kilocycles, in series with "Dummy 1", to the control grid cap of the type 6K7 tube, and adjust the output I.F. transformer (No. 108-106E) to resonance.
   (b) With "Dummy 1" still connected, move oscillator output clip from grid of 6K7 to grid cap of 6A8 and adjust input I.F. transformer (No. 108-105) to resonance.

BROADCAST BAND ALIGNMENT:
540 to 1750 Kilocycles

1. With band changing switch in the broadcast position, extreme left of its rotation, and with gang condenser in its minimum capacity position, plates entirely out of mesh, and with external oscillator connected in series with "Dummy 2" to tan antenna lead and black ground lead, make following adjustments:
   (a) Set external oscillator to 1750 K.C. and adjust broadcast oscillator trimmer to resonance (adjustment E'; see top view, Fig. 1).
   (b) Re-set external oscillator to 1400 K.C., rotate variable gang condenser and pick up signal. Adjust broadcast antenna trimmer (Adjustment A') to resonance; also adjust preselector trimmer which is mounted on the top of the rear section of the three gang variable tuning condenser to resonance. (See top view of chassis, Fig. 1, for location of this adjustment.)
   (c) Re-set external oscillator to 600 K.C., and adjust broadcast series pad (Adjustment F') to resonance by rotating condenser to approximately 600 K.C., rocking it slowly to and fro until by adjusting series pad maximum output is attained.
   (d) Repeat adjustments "a" and "c" until sensitivity is at its maximum.
   (e) Check for tracking and sensitivity at 1000 kilocycles. **Under no circumstances bend plates of variable condenser sections to correct tracking.**

SHORT WAVE BAND ALIGNMENT:
5.5 to 18.1 Megacycles

1. With band changing switch in the short wave position, extreme right of its rotation, and with external oscillator set at 17 megacycles and connected in series with "Dummy 3" to the tan antenna and black ground lead, make the following adjustments:
   (a) Move dial pointer to 17 megacycles and adjust short wave oscillator (Adjustment G') and short wave antenna (Adjustment C') to resonance.
   (b) Re-set external oscillator to 6 megacycles and pick up signal by rotating variable condenser and check sensitivity.
   (c) Re-set external oscillator and check set at 18.1 megacycles and 5.5 megacycles for band coverage.

NOTE: It is extremely necessary in making all of these adjustments that the fundamental oscillator signal be tuned in and not the image frequency which will fall below the fundamental. An example of this is an image of a fundamental 17 megacycle signal appears near 16.1 megacycles.

MIDDLE WAVE BAND ALIGNMENT:
1730 to 5800 Kilocycles

1. With band changing switch in the middle wave position, center of its rotation, and with external oscillator set at 5000 kilocycles and connected in series with "Dummy 3" to the tan antenna and black ground lead, make the following adjustments:
   (a) Move dial pointer to 5000 kilocycles and adjust middle wave oscillator (Adjustment D') and middle wave antenna (Adjustment B') to resonance.
   (b) Re-set external oscillator to 1900 kilocycles and pick up signal by rotating variable condenser and check sensitivity.
   (c) Re-check broadcast band alignment.

PROCEDURE FOR SETTING THE AUTOMATIC TUNER LEVERS:

There are six levers on the dial by means of which six stations may be selected, (See "B", Fig. 2).

Make a list of local stations you tune in regularly; any number up to and including 6.

Punch out from the set of station call letter tabs supplied, the call letters of the stations you have selected.

Above each automatic tuner lever an opening in the escutcheon is provided for inserting the call letter tabs, (See "A" Fig. 2). Any order of grouping may be used, however, it is recommended that the left hand four automatic levers be used for high frequency stations (1750 to 1000 K.C.) and the right hand four automatic levers for low frequency stations (1000 to 540 K.C.).

Insert the call letter tabs in the rectangular openings in the escutcheon above each of the automatic tuner levers. One of the small celluloid tabs supplied should be snapped into place over each of the station call letter tabs.

Press DOWN ALL THE WAY any one of the automatic tuner levers. Holding it down FIRMLY, tune in by means of the tuning knob (No. 4) the station indicated on the station call letter tab above this lever. Turn the tuning knob very slowly back and forth (while still holding lever in downward position) until the signal is clearest. The station will then be accurately tuned in. Release the lever.

Press down another automatic tuner lever. Holding it down FIRMLY, carefully tune in the station indicated on the call letter tab above this lever. Release this lever.

Follow this procedure until you have selected all of your favorite stations.

Rotate the tuning knob (No. 4) to the right (clockwise) as far as it will turn. Now remove from the right side of the cabinet the metal button, and, with a screw driver inserted through the hole, tighten the locking adjustment screw "C". It is VERY IMPORTANT that this locking screw is turned until it is ABSOLUTELY TIGHT.

This screw will lock in place all the stations you have selected on the automatic tuner levers. (Note: Locking screw "C" is loose when radio is shipped from factory).

If you should desire to change any station you selected to another, loosen the locking screw "C" four or five complete turns; select the new station as explained. (Note: If the dial mechanism works hard when setting up a new station for one of the automatic tuner levers, it is due to the locking screw being too tight. Loosen the locking screw "C" until the dial mechanism works freely with the tuner lever pressed down.)

BE SURE TO RETIGHTEN the LOCKING SCREW; otherwise the stations you have selected will not stay adjusted to the levers.

MODEL 860
SERIES A **(Serial No. 7L897400 and up)**

PROCEDURE FOR SETTING THE AUTOMATIC TUNER LEVERS:

There are eight levers on the dial by means of which eight stations may be selected, (See "B", Fig. 2).

Make a list of local stations you tune in regularly; any number up to and including 8.

Punch out from the set of station call letter tabs supplied, the call letters of the stations you have selected.

Above each automatic tuner lever an opening in the escutcheon is provided for inserting the call letter tabs, (See "A" Fig. 2). Any order of grouping may be used, however, it is recommended that the left hand four automatic levers be used for high frequency stations (1750 to 1000 K.C.) and the right hand four automatic levers for low frequency stations (1000 to 540 K.C.).

Insert the call letter tabs in the rectangular openings in the escutcheon above each of the automatic tuner levers. One of the small celluloid tabs supplied should be snapped into place over each of the station call letter tabs.

Press DOWN ALL THE WAY any one of the automatic tuner levers. Holding it down FIRMLY, tune in by means of the tuning knob (No. 4) the station indicated on the station call letter tab above this lever. Turn the tuning knob very slowly back and forth (while still holding lever in downward position) noting the width of the shadow indicated on the screen of the cathode-ray tuning eye. Minimum width on the eye indicates the ideal tuning position (resonance). The station will then be clearest and accurately tuned in. Release the lever.

Press down another automatic tuner lever. Holding it down FIRMLY, carefully tune in the station indicated on the call letter tab above this lever. Release this lever.

Follow this procedure until you have selected all of your favorite stations.

Rotate the tuning knob (No. 4) to the right (clockwise) as far as it will turn. Now remove from the right side of the cabinet the metal button, and, with a screw driver inserted through the hole, tighten the locking adjustment screw "C". It is VERY IMPORTANT that this locking screw is turned until it is ABSOLUTELY TIGHT. If a screw driver is not available, the locking screw can be tightened by reaching in from the back of the cabinet, and, by means of the pin "D" (see Fig. 1), rotate the locking screw shaft to the right (clockwise) until thoroughly tight.

This screw will lock in place all the stations you have selected on the automatic tuner levers. (Note: Locking screw "C" is loose when radio is shipped from factory).

If you should desire to change any station you selected to another, loosen the locking screw "C" four or five complete turns; select the new station as explained. (Note: If the dial mechanism works hard when setting up a new station for one of the automatic tuner levers, it is due to the locking screw being too tight. Loosen the locking screw "C" until the dial mechanism works freely with the tuner lever pressed down.)

BE SURE TO RETIGHTEN the LOCKING SCREW; otherwise the stations you have selected will not stay adjusted to the levers.

DUMMY ANTENNAS:
The following dummy antennas are used in aligning and are referred to in the following alignment instructions as "Dummy 1", "Dummy 2", and "Dummy 3".
Dummy 1: (I.F.)—Consists of a .1 mfd. condenser connected in series with the external oscillator.
Dummy 2: (Broadcast)—Consists of a 200 mmfd. condenser and a 20 ohm resistor connected in series with each other and in series with the external oscillator.
Dummy 3: (Middle and Short Wave)—Consists of a .1 mfd. condenser and a 400 ohm resistor connected in series with each other and in series with the external oscillator.

ALIGNING I.F. TRANSFORMERS: (465 K.C.):
Part No. 108-106E Output I.F. Transformer
Part No. 108-105D Input I.F. Transformer
These I. F. transformers have two adjustments, both of which are accessible from the top of chassis (see top view, Fig. 1).
1. With volume control full on, (the extreme right of its rotation), the band changing switch in the broadcast position, (extreme left of its rotation), and with the variable condenser set to approximately 1400 kilocycles, make the following adjustments:
   (a) Connect external oscillator set at 465 kilocycles, in series with "Dummy 1", to the control grid cap of the type 6K7 tube, and adjust the output I.F. transformer (No. 108-106E) to resonance.
   (b) With "Dummy 1" still connected, move oscillator output clip from grid of 6K7 to grid cap of 6A8G and adjust input I.F. transformer (No. 108-105D) to resonance.

BROADCAST BAND ALIGNMENT:
540 to 1750 Kilocycles

1. With band changing switch in the broadcast position, extreme left of its rotation, and with gang condenser in its minimum capacity position, plates entirely out of mesh, and with external oscillator connected in series with "Dummy 2" to tan antenna lead and black ground lead, make following adjustments:
   (a) Set external oscillator to 1750 K.C. and adjust broadcast oscillator trimmer to resonance (adjustment E'; see top view, Fig. 1).
   (b) Re-set external oscillator to 1400 K.C., rotate variable gang condenser and pick up signal. Adjust broadcast antenna trimmer (Adjustment A') to resonance; also adjust preselector trimmer which is mounted on the top of the rear section of the three gang variable tuning condenser to resonance. (See top view of chassis, Fig. 1, for location of this adjustment.)
   (c) Re-set external oscillator to 600 K.C., and adjust broadcast series pad (Adjustment F') to resonance by rotating condenser to approximately 600 K.C., rocking it slowly to and fro until by adjusting series pad maximum output is attained.
   (d) Repeat adjustments "a" and "c" until sensitivity is at its maximum.
   (e) Check for tracking and sensitivity at 1000 kilocycles. **Under no circumstances bend plates of variable condenser sections to correct tracking.**

SHORT WAVE BAND ALIGNMENT:
5.5 to 18.1 Megacycles

1. With band changing switch in the short wave position, extreme right of its rotation, and with external oscillator set at 17 megacycles and connected in series with "Dummy 3" to the tan antenna and black ground lead, make the following adjustments:
   (a) Move dial pointer to 17 megacycles and adjust short wave oscillator (Adjustment G') and short wave antenna (Adjustment C') to resonance.
   (b) Re-set external oscillator to 6 megacycles and pick up signal by rotating variable condenser and check sensitivity.
   (c) Re-set external oscillator and check set at 18.1 megacycles and 5.5 megacycles for band coverage.

NOTE: It is extremely necessary in making all of these adjustments that the fundamental oscillator signal be tuned in and not the image frequency which will fall below the fundamental. An example of this is an image of a fundamental 17 megacycle signal appears near 16.1 megacycles.

MIDDLE WAVE BAND ALIGNMENT:
1730 to 5800 Kilocycles

1. With band changing switch in the middle wave position, center of its rotation, and with external oscillator set at 5000 kilocycles and connected in series with "Dummy 3" to the tan antenna and black ground lead, make the following adjustments:
   (a) Move dial pointer to 5000 kilocycles and adjust middle wave oscillator (Adjustment D') and middle wave antenna (Adjustment B') to resonance.
   (b) Re-set external oscillator to 1900 kilocycles and pick up signal by rotating variable condenser and check sensitivity.
   (c) Re-check broadcast band alignment.

©John F. Rider, Publisher

MODELS 888,889
Schematic, Voltage
Socket, Trimmers
Parts

BELMONT RADIO CORP

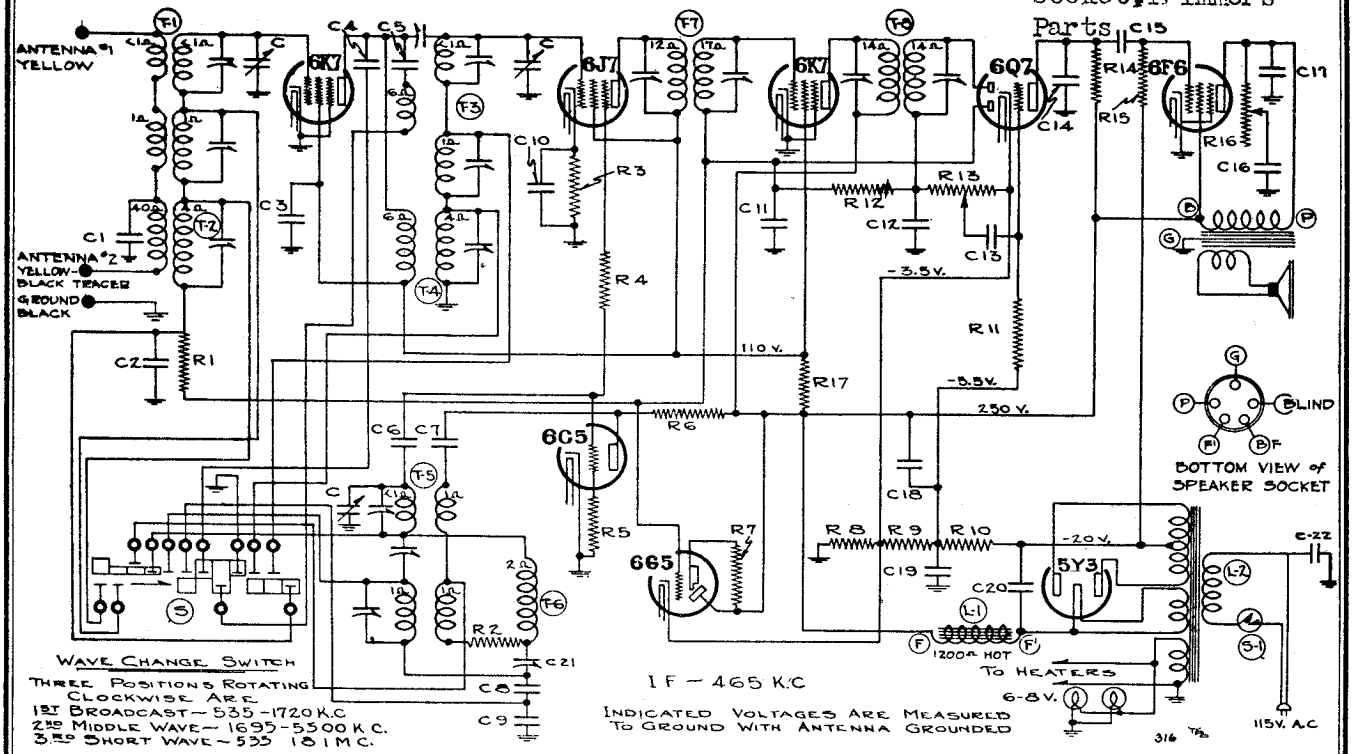

RESISTORS

R1	130-103	100M ohm—1/3 w.—10%
R2	130-60	100 ohm—1/3 w.—20%
R3	130-159	2500 ohm—1/3 w.—10%
R4	130-60	100 ohm—1/3 w.—20%
R5	130-52	50M ohm—1/3 w.—20%
R6	130-77	10M ohm—1 w.—20%
R7	130-110	1 megohm—1/10 w.—10%
R8	106-33	55 ohm—Muter
R9	106-33	30 ohm—Muter
R10	106-33	240 ohm—Muter
R11	130-4	3 megohm—1/3 w.—20%
R12	130-38	2 megohm—1/3 w.—20%
R13	101-65	500M ohm—Volume Control
R14	130-103	100M ohm—1/3 w.—10%
R15	130-102	500M ohm—1/3 w.—10%
R16	101-53	50M ohm—Tone Control
R17	130-160	10M ohm—2 w.—Wire Wound 10%

NOTE: R8—R9—and R10 in one unit
Part No. 106-33

CONDENSERS

C1	129-40	.0001 Mica—10%
C2	100-9	.05x200 v.—25%
C3	100-53	.25x400 v.—25%
C4	129-59	.0003 Mica—5%
C5	129-38	.00005 Mica—10%
C6	129-38	.00005 Mica—10%
C7	100-25	.002x600 v.—25%
C8	129-70	.004 Mica—2½%
C9	129-71	.002 Mica—2½%
C10	100-20	.1x200 v.—25%
C11	100-26	.02x400 v.—25%
C12	129-40	.0001 Mica—10%
C13	100-11	.01x400 v.—25%
C14	129-2	.0005 Mica—20%
C15	100-11	.01x400 v.—25%
C16	100-27	.025x600 v.—25%
C17	100-25	.002x600 v.—25%
C18	103-13	8.0x400 v.—Lytic
C19	100-20	.1x200 v.—25%
C20	103-12	8.0x275 v.—Lytic Regulating
C21	124-35	Series Pad
C22	100-61	.02x600 ±20%

PARTS

C	102-44	Section of three gang condenser
T1	111-67	MW-SW Antenna Coil Assembly
T2	111-68	Broadcast Antenna Coil Assembly
T3	109-32	MW-SW R. F. Coil Assembly
T4	109-33	B. C.-R. F. Coil Assembly
T5	110-53	M. W.-S. W. Oscillator Coil Assembly
T6	110-52	B. C. Osc. Coil Assembly
T7	108-93	Input I. F. Coil 465 kc.
T8	108-92	Output I. F. Coil 465 kc.
L1	114-56	Speaker 6"
L1	114-65	Speaker 10"—field Resistance—1200 ohm hot
L2	104-80	Power Transformer—50-60 cycles
S	125-25	Band Switch
S1	101-65	On-off switch on Volume Control

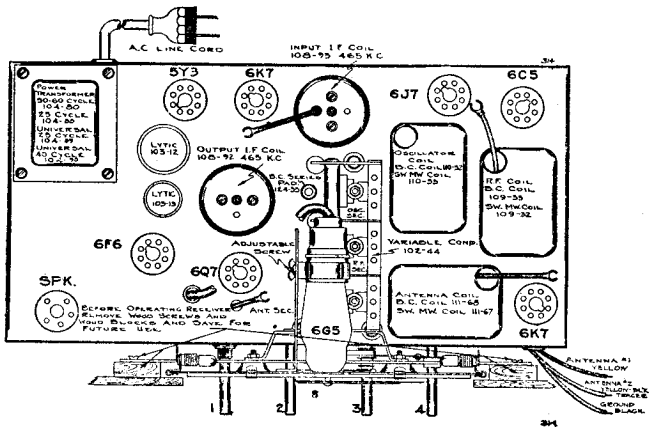

Vol. Control On-Off Switch | Tone Control | Tuning Control | Band Switch

©John F. Rider, Publisher

MODELS 888,889
Alignment,Trimmers
Notes

BELMONT RADIO CORP.

1—Type 6K7 Remote cut-off pentode R.F. amplifier.
1—Type 6J7—pentode first detector.
1—Type 6C5 Oscillator.
1—Type 6K7 Remote cut-off pentode I.F. amplifier (465 K.C.)
1—Type 6Q7G duplex diode triode second detector, A.V.C. and audio.
1—Type 6F6G—pentode output amplifier.
1—Type 5Y3G or 5W4—high vacuum rectifier.
1—Type 6G5 Cathode ray tuning indicator.

SERVICE NOTES:

Voltages taken from different points of circuit to chassis are measured with volume control full on, all tubes in their sockets and speaker connected, with a volt meter having a resistance of 1000 ohms per volt. These voltages are clearly indicated on the circuit diagram.

IN ORDER TO PREVENT SIGNAL FROM ACTING UPON AVC AND AFFECTING ACCURACY OF VOLTAGE MEASUREMENTS, AERIAL AND GROUND LEADS SHOULD BE SHORT CIRCUITED WHILE MAKING MEASUREMENTS.

All voltages are to be measured with 115 volts on the primary of the power transformer.

Resistances of coils and transformer windings are indicated in ohms on schematic circuit diagrams.

To check for open by-pass condensers, shunt each condenser with another condenser of the same capacity and voltage rating, which is known to be good, until the defective unit is located.

Excessive hum, stuttering, low volume and a reduction in all D.C. voltages is usually caused by a shorted electrolytic condenser, open by-pass condensers frequently cause oscillation and distorted tone.

DUMMY ANTENNAS:

The following dummy antennas are used in aligning and are referred to in the following alignment instructions as "Dummy 1", "Dummy 2", and "Dummy 3".

Dummy 1: (I.F.)—Consists of a .1 mfd. condenser connected in series with the external oscillator.

Dummy 2: (Broadcast)—Consists of a 200 mmfd. condenser and a 20 ohm resistor connected in series with each other and in series with the with the external oscillator.

Dummy 3: (Middle and Short Wave)—Consists of a .1 mfd. condenser and a 400 ohm resistor connected in series with each other and in series with the external oscillator.

ALIGNING I.F. TRANSFORMERS: (465 K.C.):

Part No. 108-92 Output I.F. Transformer
Part No. 108-93 Input I.F. Transformer

These I.F. transformers have two adjustments, both of which are accessible from the top of chassis (see top view).

1. With volume control full on, (the extreme right of its rotation), the band changing switch in the broadcast position, (extreme left of its rotation), and with the variable condenser set to approximately 1400 kilocycles, make the following adjustments:
   (a) Connect external oscillator set at 465 kilocycles, in series with "Dummy 1", to the control grid cap of the type 6K7 tube, and adjust the output I.F. transformer (No. 108-92) to resonance.
   (b) With "Dummy 1" still connected, move oscillator output clip from grid of 6K7 to grid cap of 6J7 and adjust input I.F. transformer (No. 108-93) to resonance.

BROADCAST BAND ALIGNMENT:

535 to 1720 Kilocycles

1. With band changing switch in the broadcast position, extreme left of its rotation, and with gang condenser in its minimum capacity position, plates entirely out of mesh, and with external oscillator connected in series with "Dummy 2" to antenna and ground leads make following adjustments:
   (a) Set external oscillator to 1720 K.C. and adjust broadcast oscillator trimmer to resonance. (Adjustment number 4; see bottom view of coil assembly, Fig. 3)
   (b) Re-set external oscillator to 1400 K.C., rotate variable gang condenser and pick up signal. Adjust broadcast R.F. trimmer (adjustment number 6) and broadcast antenna trimmer (adjustment number 7), to resonance.
   (c) Re-set external oscillator to 600 K.C., and adjust broadcast series pad (adjustment number 3), to resonance by rotating condenser to approximately 600 K.C., rocking it slowly to and fro until by adjusting series pad maximum output is attained. This adjustment is located on the bottom of the chassis directly under the variable gang condenser. (See bottom view of chassis, Fig. 3).
   (d) Repeat adjustments "a" and "b" until sensitivity is at its maximum.
   (e) Check for tracking and sensitivity at 1400, 1000, and 600 kilocycles. **Under no circumstances bend plates of variable condenser sections to correct tracking.**

SHORT WAVE BAND ALIGNMENT:

5.35 to 18.1 Megacycles

1. With band changing switch in the short wave position, extreme right of its rotation, and with external oscillator set at 17 megacycles and connected in series with "Dummy 3" to the antenna and ground leads, make the following adjustments:
   (a) Move dial pointer to 17 megacycles and adjust short wave oscillator trimmer (adjustment number 1) to resonance.
   (b) Adjust short wave R.F. trimmer (adjustment number 8), and short wave antenna trimmer (adjustment number 9), to resonance.
   (c) Re-set external oscillator and check set at 18.1 megacycles and 6 megacycles for band coverage and sensitivity.

NOTE: It is extremely necessary in making all of these adjustments that the fundamental oscillator signal be tuned in and not the image frequency which will fall below the fundamental on the receiver dial. As an example of this a fundamental 17 megacycle signal can be tuned in not only at 17 on the dial but also at approximately 16.1 megacycles.

MIDDLE WAVE BAND ALIGNMENT:

1695 to 5500 Kilocycles

1. With band changing switch in the middle wave position, center of its rotation, and with external oscillator set at 5 megacycles and connected in series with "Dummy 3" to the antenna and ground leads make the following adjustments:
   (a) Move dial pointer to 5 megacycles and adjust middle wave oscillator trimmer (adjustment number 2) to resonance.
   (b) Adjust middle wave R.F. trimmer (adjustment number 10), and middle wave antenna trimmer (adjustment number 5), to resonance.
   (c) Re-set external oscillator and check sensitivity at 1800 kilocycles.
   (d) Recheck broadcast band alignment.

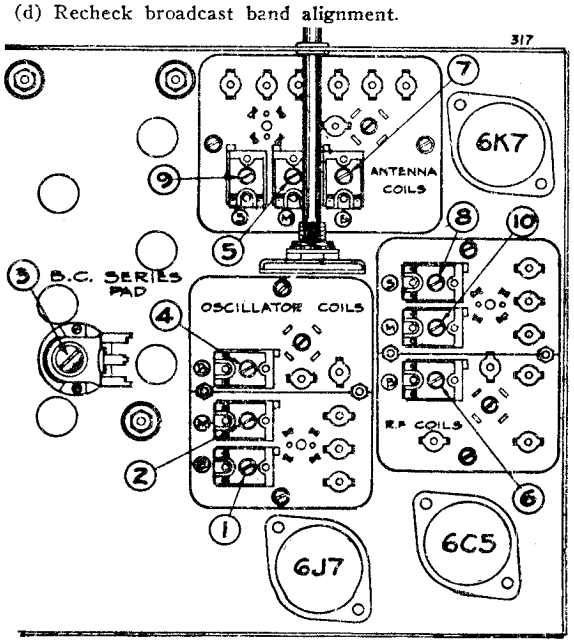

BOTTOM VIEW SHOWING TRIMMERS

©John F. Rider, Publisher

©John F. Rider, Publisher

BELMONT RADIO CORP.

MODEL 881
Schematic, Socket
Trimmers, Alignment
Parts

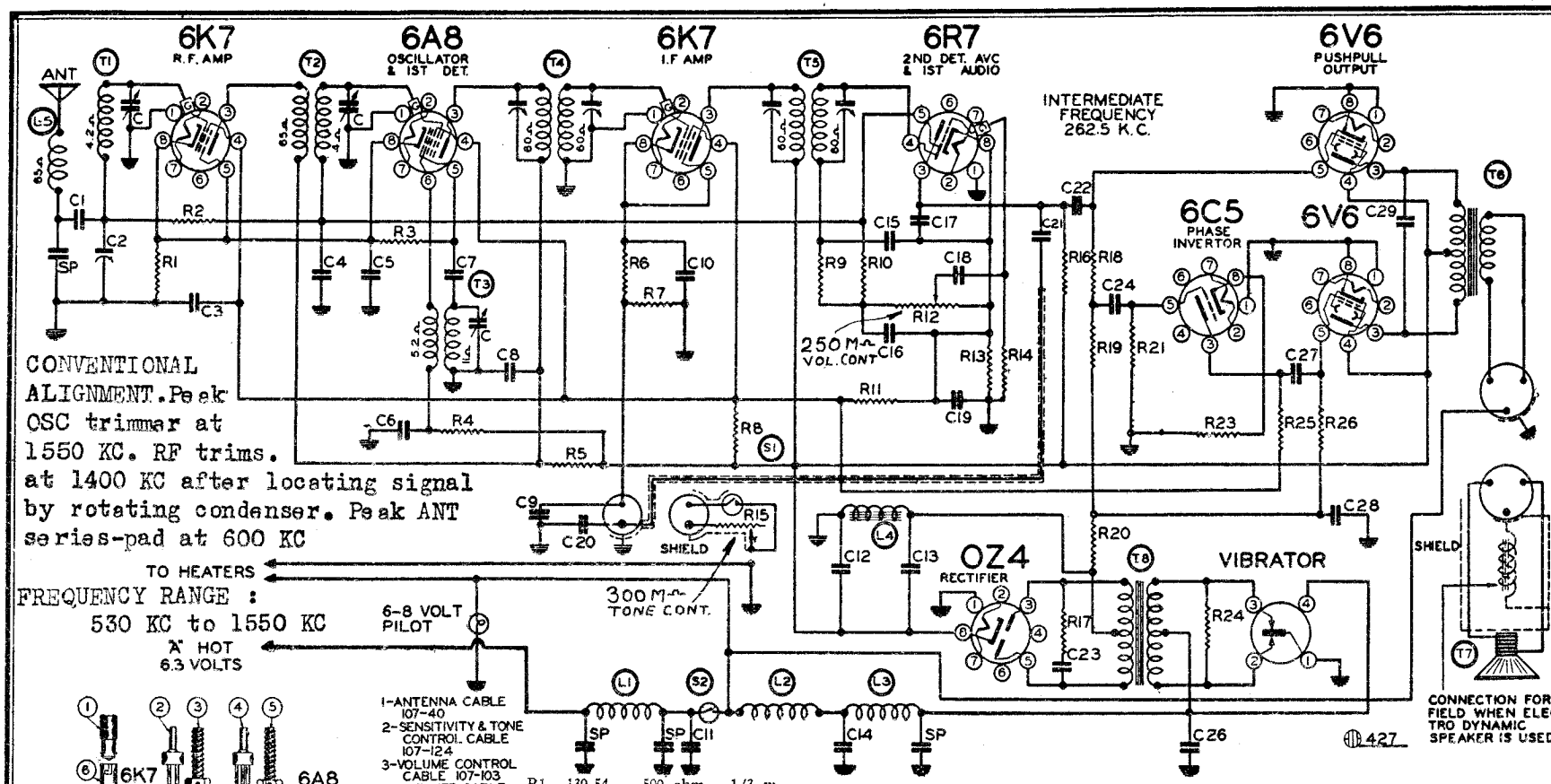

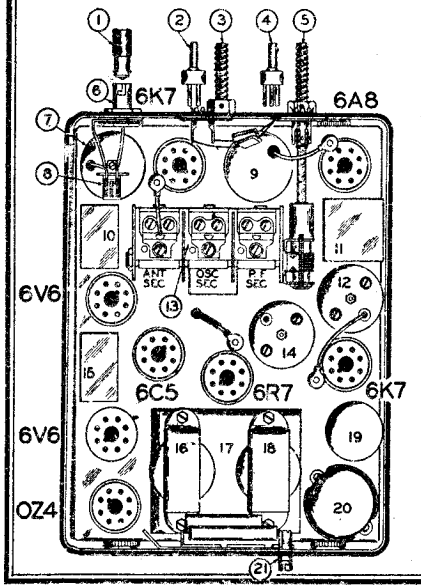

1-ANTENNA CABLE 107-40
2-SENSITIVITY & TONE CONTROL CABLE 107-124
3-VOLUME CONTROL CABLE 107-103
4-SPEAKER CABLE 107-133
5-TUNING CONTROL CABLE 107-104
6-ANTENNA FILTER ASSEMBLY 111-74
7-ANTENNA COIL 111-73A
8-ANTENNA FILTER CHOKE 111-76
9-R.F COIL 109-36
10-BY-PASS BLOCK 116-20B
11-BY-PASS BLOCK 116-19B
12-INPUT I F 262.5KC 108-101
13-VARIABLE CONDENSER 102-45A
14-OUTPUT I.F 262.5KC 108-102B
15-BY-PASS BLOCK 116-23
16-B FILTER CHOKE 105-48
17-POWER TRANSFORMER 104-112
18-OUTPUT TRANSFORMER 105-49
19-'LYTIC CONDENSER 119-43
20-VIBRATOR 126-1
21-A FILTER ASSEMBLY 105-50

R1	130-54	500 ohm - 1/3 w.	
R2	130-141	250M ohm - 1/3 w.	
R3	130-52	50M ohm - 1/3 w.	
R4	130-138	50M ohm - 1/2 w.	
R5	130-31	1500 ohm - 1/3 w.	
R6	130-154	1000 ohm - 1/3 w.	
R7	130-161	4M ohm - 1/3 w.	
R8	130-185	20M ohm - 1/2 w.	
R8	130-185	20M ohm - 1.2 w.	
R9	130-162	50M ohm - 1/3 w.	
R10	130-142	1 megohm - 1/3 w.	
R11	130-139	40M ohm - 1/3 w.	
R12	101-86	Volume control -	
R13	130-184	700 ohm - 1/3 w.	
R14	130-142	1 megohm - 1/3 w.	
R15	101-90	Tone control in control head	
R16	130-181	100M ohm - 1/3 w.	
R17	130-22	5M ohm - 1/3 w.	
R18	130-183	150M ohm - 1/3 w	
R19	130-181	100M ohm 1/3 w.	
R20	130-141	250M ohm - 1/3 w.	
R21	130-190	30M ohm - 1/3 w.	
R23	130-178	3M ohm - 1/3 w.	
R24	130-87	200 ohm - 1/3 w.	
R25	130-181	100M ohm - 1/3 w.	
R26	130-141	250M ohm - 1/3 w.	

CONDENSERS

C	102-45A	3 gang variable
C1	129-73	.002 - Mica
C2	124-36	350 mmf. Nominal - Series pad
C3	116-20B	.25 x 200 v. - Red
C4	116-19B	.05 x 200 v. - Yellow
C5	116-20B	.1 x 200 v. - Yellow
C6	116-19B	.1 x 400 v. - Red
C7	129-12	.00025 Mica
C8	116-19B	.1 x 200 v. - Green
C9	129-2	.0005 - Mica
C10	116-19B	.05 x 200 v. - Black
C11	100-31	.5 x 120 v.
C12	119-43	8.0 mfd. 'lytic
C13	119-43	12.0 mfd. 'lytic
C14	100-31	.5 x 120 v.
C15	129-5	.0001 Cer.
C16	129-5	.0001 Cer.
C17	129-5	.0001 Mica
C18	116-20B	.02 x 200 v. - Blue
C19	116-20B	.02 x 200 v. - Green
C20	129-2	.0005 - Mica
C21	100-13	.05 x 400
C22	116-23	.02 x 400 v. - White
C23	100-68	.003 x 1400 v.
C24	116-23	.1 x 200 v. - Red
C26	100-31	.5 x 120 v.
C27	116-23	.02 x 400 v. - Green
C28	116-23	.5 x 200 v. - Yellow
C29	100-58	.005 x 1200 v.

C3, C5, C18 and C19 in same unit
C4, C6, C8 and C10 in same unit
C22, C24, C27 and C28 in same unit

PARTS

T1	111-73A	Antenna Coil
T2	109-36	R. F. Coil
T3	110-59	Oscillator Coil
T4	108-101	Input I. F. Coil
T5	108-102B	Output I. F. Coil
T6	105-49	Output Transformer
T7	114-94	8" Dynamic Speaker
T8	104-112	Power transformer
L1	105-26	RFA Choke
L2	105-24	RFA Choke
L3	105-19	A Choke
L4	105-48	B Choke
L5	111-76	Antenna Filter choke assembly
S1		Sensitivity switch in control head
S2		On-off Switch in control head

MODEL 881

(Serial No. 88000 and up)

©John F. Rider, Publisher

DUMMY ANTENNAS: CHASSIS No. 910 Series A

The following dummy antennas are used in aligning and are referred to in the following alignment instructions as "Dummy 1," "Dummy 2," and "Dummy 3".

Dummy 1: (I.F.)—Consists of a .1 mfd. condenser connected in series with the external oscillator.

Dummy 2: (Broadcast)—Consists of a 200 mmfd. condenser and a 20 ohm resistor connected in series with each other and in series with the external oscillator.

Dummy 3: (Middle and Short Wave)—Consists of a .1 mfd. condenser and a 400 ohm resistor connected in series with each other and in series with the external oscillator.

ALIGNING I.F. TRANSFORMERS (465 K.C.)

Part No. 108119 Output I.F. Transformer

Part No. 108118 Input I,F. Transformer

These I.F. transformers have two adjustments, both of which are accessible from the top of chassis (see Fig. 3).

1. With volume control full on, (the extreme right of its rotation), the band changing switch in the broadcast position, (extreme left of its rotation), the tone control turned to treble position, the phono switch in number 1 position sharp, (counter clockwise), and with the variable condenser set to minimum capacity (plates entirely out of mesh), make the following adjustments:
   (a) Connect external oscillator set at 465 kilocycles, in series with "Dummy 1," to the control grid cap of the type 6K7 I.F. tube and adjust the output I.F. transformer 108119 to resonance.
   (b) With "Dummy 1" still connected, move oscillator output clip from grid of 6K7 to grid cap to 6A8 and adjust input I.F. transformer (108118) to resonance.

SHORT WAVE BAND ALIGNMENT:

8.0 to 24.0 Megacycles

1. With band changing switch in the short wave position, extreme right of its rotation, and with external oscillator set at 22 Megacycles and connected in series with "Dummy 3" to the tan antenna and black ground lead, make the following adjustments: (See Fig. 3).
   (a) Move dial pointer to 22 Megacycles and adjust short wave oscillator (adjustment C13), short wave R.F. (adjustment C7) and short wave antenna (adjustment C1) to resonance.
   (b) Re-set external oscillator to 9 Megacycles and pick up signal by rotating variable condenser and check for sensitivity.

   NOTE: It is extremely necessary in making all of these adjustments that the fundamental oscillator signal be tuned in and not the image frequency which will fall below the fundamental. As an example of this a fundamental 22 megacycle signal can be tuned in not only at 22 on the dial, but also at approximately 21 megacycles.

MIDDLE WAVE ALIGNMENT:

2.35 to 7.0 Megacycles

1. With band changing switch in the middle wave position, center of its rotation, and with external oscillator set at 6 Megacycles connected in series with "Dummy 3" to the tan antenna and black ground lead, make the following adjustments. (See Fig. 3).
   (a) Rotate condenser, pick up signal and adjust middle wave oscillator (adjustment C14), middle wave R.F. (adjustment C8) middle wave antenna (adjustment C2) to resonance.
   (b) Re-set external oscillator to 2.5 megacycles and pick up signal by rotating variable condenser and check sensitivity.

BROADCAST BAND ALIGNMENT:

540 to 1750 Kilocycles

1. With band changing switch in the broadcast position, extreme left of its rotation, and with external oscillator set at 1750 Kilocycles and connected in series with "Dummy 2" to the tan antenna and black ground lead, make the following adjustments. (See Fig. 3).
   (a) Move dial pointer to 1750 Kilocycles and adjust broadcast oscillator trimmer (adjustment C15) to resonance.
   (b) Re-set external oscillator to 1400 Kilocycles, move dial pointer to 1400 Kilocycles and adjust broadcast antenna trimmer, (adjustment C3) and broadcast R.F. trimmer (adjustment C9) to resonance.
   (c) With external oscillator set at 600 K.C. adjust broadcast series pad (adjustment C21) to resonance with oscillator. Keep set in tune with oscillator by slowly rocking to and fro the variable condenser until maximum output is obtained.
   (d) Repeat adjustments (a) and (c) until sensitivity is at its maximum.
   (e) Check for tracking and sensitivity at 1000 Kilocycles.

   UNDER NO CIRCUMSTANCES BEND PLATES OF VARIABLE CONDENSER TO CORRECT TRACKING.

MODEL 1175 SERIES A

DUMMY ANTENNAS:

The following dummy antennas are used in aligning and are referred to in the following alignment instructions as "Dummy 1," "Dummy 2," and "Dummy 3."

Dummy 1: (I.F.)—Consists of a .1 mfd. condenser connected in series with the external oscillator.

Dummy 2: (Broadcast)—Consists of a 200 mmfd. condenser and a 20 ohm resistor connected in series with each other and in series with the external oscillator.

Dummy 3: (Middle and Short Wave)—Consists of a .1 mfd. condenser and a 400 ohm resistor connected in series with each other and in series with the external oscillator.

ALIGNING I.F. TRANSFORMERS (465 K.C.)

Part No. 108-114 Output I.F. Transformer

Part No. 108-113 Input I.F. Transformer

These I.F. transformers have two adjustments, both of which are accessible from the top of chassis (see top view Fig. 1).

1. With volume control full on, (the extreme right of its rotation), the band changing switch in the broadcast position, (extreme left of its rotation), the tone control on "Hi" part of the sharp position (as much right rotation as possible without operating the Hi Fidelity switch), and with the variable condenser set to approximately 1400 kilocycles, make the following adjustments:
   (a) Connect external oscillator set at 465 kilocycles, in series with "Dummy 1," to the control grid cap of the type 6K7 I.F. tube and adjust the output I.F. transformer 108-114 to resonance.
   (b) With "Dummy 1" still connected, move oscillator output clip from grid of 6K7 to grid cap to 6J7 and adjust input I.F. transformer (108-113) to resonance.
   (c) With oscillator still connected to 6J7, re-adjust output I.F. transformer if necessary.

BROADCAST BAND ALIGNMENT:

535 to 1720 Kilocycles

1. With band changing switch in the broadcast position, extreme left of its rotation, and with external oscillator set at 1720 Kilocycles and connected in series with "Dummy 2" to the tan antenna and black ground lead, make the following adjustments:
   (a) Move dial pointer to 1720 Kilocycles and adjust broadcast oscillator trimmer (adjustment I) to resonance. See bottom view, Fig. 3.
   (b) Re-set external oscillator to 1400 Kilocycles, move dial pointer to 1400 Kilocycles and adjust broadcast antenna trimmer, (adjustment A) and broadcast R.F. trimmer (adjustment D) to resonance.
   (c) With external oscillator set at 600 K.C. adjust broadcast series pad (adjustment J) to resonance with oscillator. Keep set in tune with oscillator by slowly rocking to and fro the variable condenser until maximum output is obtained.
   (d) Repeat adjustments (a) and (c) until sensitivity is at its maximum.
   (e) Check for tracking and sensitivity at 1000 Kilocycles. UNDER NO CIRCUMSTANCES BEND PLATES OF VARIABLE CONDENSER TO CORRECT TRACKING.

SHORT WAVE BAND ALIGNMENT:

5.35 to 18.1 Megacycles

1. With band changing switch in the short wave position, extreme right of its rotation, and with external oscillator set at 17 Megacycles and connected in series with "Dummy 3" to the tan antenna and black ground lead, make the following adjustments:
   (a) Move dial pointer to 17 Megacycles and adjust short wave oscillator (adjustment G), short wave R.F. (adjustment F) and short wave antenna (adjustment C) to resonance.
   (b) Re-set external oscillator to 6 Megacycles and pick up signal by rotating variable condenser and check for sensitivity.

   NOTE: It is extremely necessary in making all of these adjustments that the fundamental oscillator signal be tuned in and not the image frequency which will fall below the fundamental. As an example of this a fundamental 17 megacycle signal can be tuned in not only at 17 on the dial, but also at approximately 16.1 megacycles.

MIDDLE WAVE ALIGNMENT:

1695 to 5500 Kilocycles

1. With band changing switch in the middle wave position, center of its rotation, and with external oscillator set at 5 Megacycles connected in series with "Dummy 3" to the tan antenna and black ground lead, make the following adjustments:
   (a) Rotate condenser, pick up signal and adjust middle wave oscillator (adjustment H), middle wave R.F. (adjustment E) middle wave antenna (adjustment B) to resonance.
   (b) Re-check broadcast alignment and if it is found necessary; re-adjust either R.F. or antenna trimmers. Repeat the 17 megacycles short wave and 5 megacycles middle wave adjustments.

©John F. Rider, Publisher

BELMONT RADIO CORP.

MODEL 910 Export
Schematic, Parts
Phono Notes

For conventional types of antennas connect the tan wire to the antenna lead and the yellow with black tracer and the black wire together to the ground lead.

When a doublet antenna is used connect the tan wire and the yellow with black tracer wire to the doublet antenna and the solid black wire to the ground lead. (See Fig. 1).

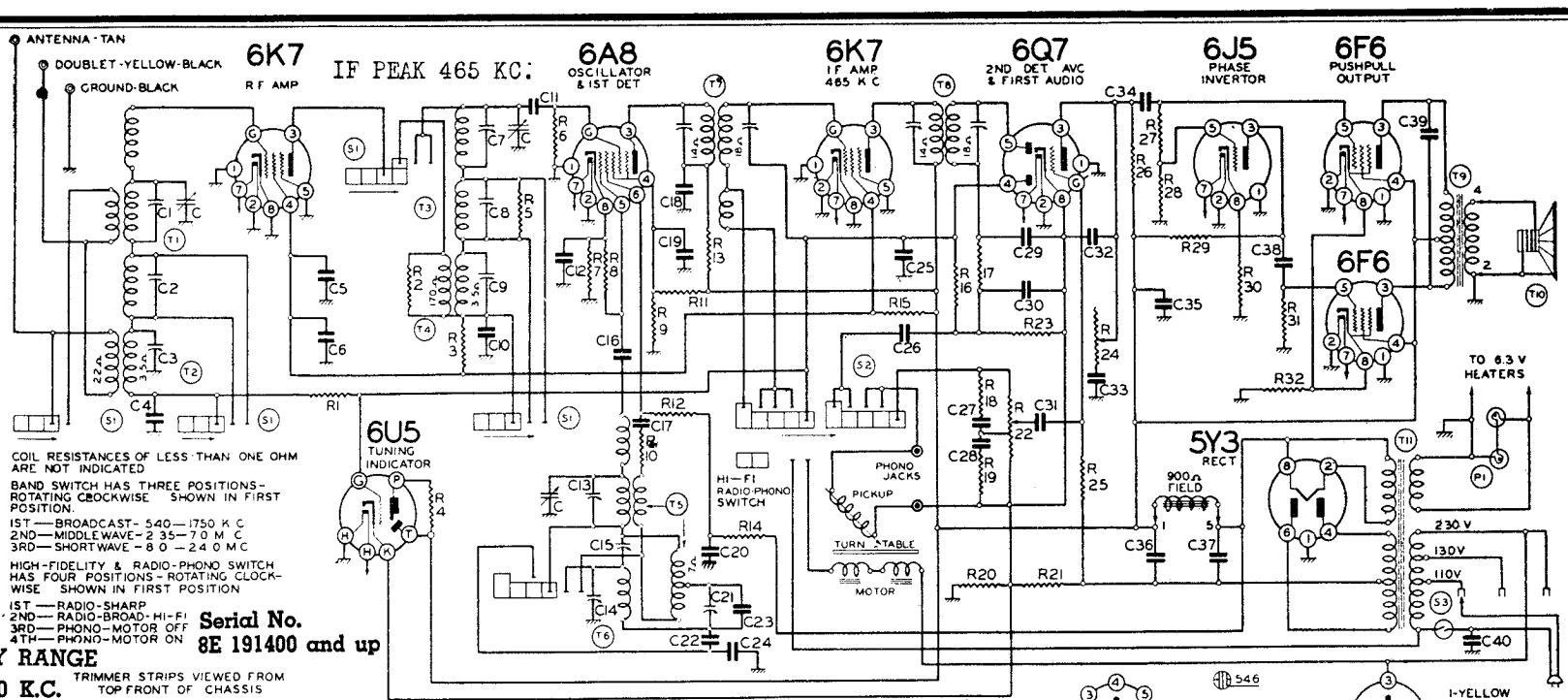

Serial No. 8E 191400 and up

FREQUENCY RANGE

540 to 1750 K.C.
2.35 to 7.0 M.C.
8.0 to 24.0 M.C.

TRIMMER STRIPS VIEWED FROM TOP FRONT OF CHASSIS

C14 | C15 | C21 | C13 | C9 | C8 | C7

C1 | C2 | C3

Mica condensers are coded with an additional dot indicating tolerance:

Tolerance percent	Color of Dot
2½%	White
5%	Green
10%	Blue
15%	Yellow
20%	Red
More Than 20%	None

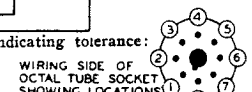

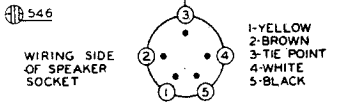

CHASSIS No. 910 Series A

Part No.	Circuit Diagram Reference	Description	No. Used in set
		CONDENSERS	
10013	C18	.05x400 Volt Tubular Condenser	1
10019	C33	.006x600 Volt Tubular Condenser	1
10020	C12, C19	.1x200 Volt Tubular Condenser	2
10025	C17, C39	.002x600 Volt Tubular Condenser	2
10026	C25, C31, C34, C38	.02x400 Volt Tubular Condenser	4
10061	C40	.02x600 Volt (Bakelite Case Type)	1
10074	C5, C35	.1x400 Volt Tubular Condenser (with Bracket)	2
10076	C26	.02x400 Volt Tubular Condenser (with Bracket)	1
10078	C28	.01x200 Volt Tubular Condenser	1
10090	C4, C10	.02x400 Volt Condenser (Braided Leads)	2
11955	C36, C37	Dual 15 Mfd Electrolytic Condenser, 450 w. v.	1
11956	C6, C20	Dual 15 Mfd Electrolytic Condenser, 350 w. v.	1
12449	C1, C2, C3	Adjustable Trimmer Strip (3 Gang)	1
12450	C7, C8, C9, C13 C14, C15, C21	Adjustable Trimmer Strip (7 Gang)	1
1295	C29, C32	.0001 Mica Type Condenser—20%	2
12912	C11	.00025 Mica Type Condenser—20%	1
12939	C30	.00005 Mica Type Condenser—20%	1
12962	C16	.00003 Mica Type Condenser—10%	1
129103	C22	.005 Mica Type Condenser—2½%	1
129104	C23	.00045 Mica Type Condenser—5%	1
129105	C24	.0035 Compression Type Condenser—2½%	1
129106	C27	.000155 Mica Type Condenser—20%	1
		RESISTORS	
1304	R16, R25	3 Meg Ohm—⅓ Watt Resistor—20%	2
13011	R26	250 M Ohm—⅓ Watt Resistor—20%	1
13021	R19	20 M Ohm—⅓ Watt Resistor—20%	1
13043	R 13	2500 Ohm—⅓ Watt Resistor—20%	1
13045	R1	250 M Ohm—⅓ Watt Resistor—20%	1
13048	R 12, R14	15 M Ohm—⅓ Watt Resistor—10%	2
13079	R7	400 Ohm—⅓ Watt Resistor—10%	1
13094	R8, R9, R18, R29	50 M Ohm—⅓ Watt Resistor 10%	4
130102	R31	500 M Ohm—⅓ Watt Resistor—10%	1
130103	R28	100 M Ohm—⅓ Watt Resistor—10%	1
130117	R17	50 M Ohm—1/10 Watt Resistor—20%	1
130163	R27	400 M Ohm—⅓ Watt Resistor—10%	1
130171	R6, R23	500 M Ohm—1/10 Watt Resistor—20%	2
130174	R10	50 Ohm—⅓ Watt Resistor—10%	1
130197	R21	20 Ohm—⅓ Watt Resistor—10%	1
130201	R5	25 M Ohm—1/10 Watt Resistor—20%	1
130203	R20	40 Ohm—⅓ Watt Resistor—10%	1
130216	R2	10 M Ohm—1/10 Watt Resistor—10%	1
130217	R3	2 M Ohm—1/10 Watt Resistor—10%	1
130218	R30	5 M Ohm—⅓ Watt Resistor—10%	1
130219	R15	20 M Ohm—1 Watt Resistor—10%	1
130220	R32	300 Ohm—1 Watt Resistor—10%	1
130221	R11	25 M Ohm—1 Watt Resistor—10%	1
		COILS	
108118	T7	Input I. F. Coil Assembly Complete with Can	1
108119	T8	Output I. F. Coil Assembly Complete with Can	1
10941	T4	Broadcast R. F. Coil Assembly, Complete	1
10942	T3	Short Wave and Middle Wave R. F. Coil Assembly, Complete	1
11078	T6	Middle Wave Oscillator Coil Assembly, Complete	1
11079	T5	Broadcast and Short Wave Oscillator Coil Assembly, Complete	1
11197	T2	Broadcast Antenna Coil Assembly Complete	1
11198	T1	Short Wave and Middle Wave Antenna Coil Assembly, Complete	1
104136	T11	Universal Transformer—40/60 Cycle Primary	1
104		Universal Transformer—25/60 Cycle Primary Note: Universal 25/60 Cycle Transformer available on special order only.	
10554	T9	Output Transformer for Speaker	1
		SPEAKERS	
114102		Eight Inch Dynamic Speaker with 15 Inch Connector Cord and Plug (Field Resis. 900 Ohms)	1
11499	T10	Ten Inch Dynamic Speaker with 20 Inch Connector Cord and Plug (Field Resis. 900 Ohms)	1
10554	T9	Output Transformer for Speaker	1
		MISCELLANEOUS	
101114	R22	Volume Control Complete (1 Meg Ohms)	1
101115	R24, S3	Tone Control and Power Switch (300 M Ohms)	1
10272	C	Three Gang Variable Condenser	1
12551	S2	High Fidelity and Phono-Radio Switch	1
12552	S1	Band Change Switch	1

PHONOGRAPH MOTOR:

On the underside of the chassis a terminal strip is provided for 220 volt phonograph motor connections.

Connect the supply cord from the phonograph motor to the terminal strip through the hole on top of the chassis provided for this purpose. (See Fig. 1).

Connections to the terminal strip are controlled by the radio-phono switch, knob no. 3 located on the front of the radio.

Only a 220 volt motor can be operated from the terminal strip connections.

MODEL 910 Export
Socket, Trimmers
Voltage, Tuner

BELMONT RADIO CORP.

CHASSIS No. 910
Series A
(Serial No. 8E 191400 and up)

3-Band All-Wave A. C. High Fidelity Superheterodyne Receiver

Three taps are provided, marked 110, 130 and 230. Set the tap on the transformer for various line voltages to conform with the following table:

110 tap: for line voltages of 100 to 125 volts.
130 tap: for line voltages of 125 to 145 volts.
230 tap; for line voltages of 210 to 250 volts.

Receivers of this model which are to be used on voltages or frequencies other than 110-130-230 volts, 40-60 cycles are so marked. The power consumption if this receiver is 110 watts. (See taps on top of power transformer.)

Voltages taken from different points of circuit to chassis are measured with volume control full on, all tubes in their sockets and speaker connected, with a voltmeter having a resistance of 1000 ohms per volt.

IN ORDER TO PREVENT SIGNAL FROM ACTING UPON AVC AND AFFECTING ACCURACY OF VOLTAGE MEASUREMENTS, AERIAL AND GROUND LEADS SHOULD BE SHORT CIRCUITED WHILE MAKING MEASUREMENTS.

VOLTAGES AT SOCKETS

LINE VOLTAGE: 110 — Volume Control: Maximum
Readings taken with 1000 ohm-per-volt meter

Antenna Shorted to Ground
Band Switch in B. C. Position

TUBE	FUNCTION	Voltage Between Socket Prong and Ground						
		Prong No. 1	Prong No. 2	Prong No. 3	Prong No. 4	Prong No. 5	Prong No. 6	Prong No. 7	Prong No. 8
6K7	R. F. Amplifier	0	6.3 (1)	85	95	0	220	6.3 (1)	0 (2)
6A8	Oscillator and First Detector	0	6.3 (1)	220	95		140	6.3 (1)	4
6K7	465 kc. I. F. Amplifier	0	6.3 (1)	220	95	0	220	6.3 (1)	0 (2)
6Q7	2nd detector AVC and First Audio	0	6.3 (1)	90			0	6.3 (1)	(3)
6J5	Phase Inverter	0	6.3 (1)	135	220	0		6.3 (1)	6.5
6F6	Push pull Output	0	6.3 (1)	215	220	0		6.3 (1)	15
6F6	Push pull Output	0	6.3 (1)	215	220	0	215	6.3 (1)	15
5Y3	Rectifier	0	5 (4)		600 (5)		600 (5)		5 (4)
6U5	Tuning Indicator	Plate to Ground			Target to Ground		Cathode to Ground		Across Heaters 6.3 AC
			15		220		—3		

(1) AC voltage as read across heater terminals 2 and 7
(2) Bias (—3.0 volts) as read across Resistor R20
(3) Bias (—1.5 volt) as read across Resistor R21
(4) AC voltage as read across heater terminals 2 and 8
(5) AC voltage as read across terminals 4 and 6

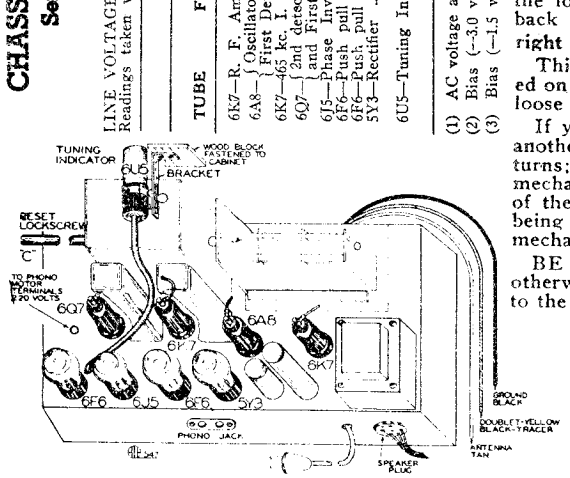

FIG. 1—TOP VIEW

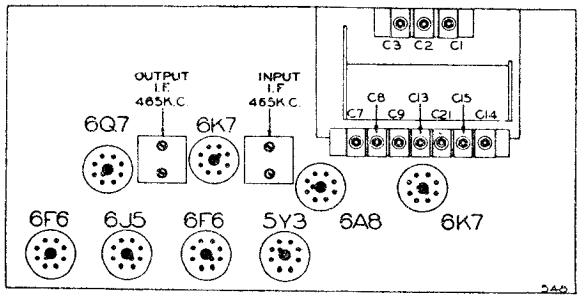

FIG. 3—VIEW SHOWING TRIMMERS

PROCEDURE FOR SETTING THE AUTOMATIC TUNER LEVERS:

IMPORTANT—READ CAREFULLY BEFORE SETTING THE AUTOMATIC LEVERS:

There are eight levers on the dial by means of which eight stations may be selected, (See "B", Fig. 2).

Make a list of local stations you tune in regularly; any number up to and including 8.

Punch out from the set of station call letter tabs supplied, the call letters of the stations you have selected.

Above each automatic tuner lever an opening in the escutcheon is provided for inserting the call letter tabs, (See "A" Fig. 2). Any order of grouping may be used, however, it is recommended that the right hand four automatic levers be used for high frequency stations (1750 to 1000 K.C.) and the left hand four automatic levers for low frequency stations (1000 to 540 K.C.).

Insert the call letter tabs in the rectangular openings in the escutcheon above each of the automatic tuner levers. One of the small celluloid tabs supplied should be snapped into place over each of the station call letter tabs.

Press DOWN ALL THE WAY any one of the automatic tuner levers. Holding it down FIRMLY, tune in by means of the tuning knob No. 5 the station indicated on the station call letter tab above this lever. Turn the tuning knob very slowly back and forth (while still holding lever in downward position), noting the width of the shadow indicated on the screen of the cathode-ray tuning eye. Minimum width on the eye indicates the ideal tuning position (resonance). The station will then be clearest and accurately tuned in. Release the lever.

Press down another automatic tuner lever. Holding it down FIRMLY, carefully tune in the station indicated on the call letter tab above this lever. Release this lever.

Follow this procedure until you have selected all of your favorite stations.

Rotate the tuning knob No. 5 to the right (clockwise) as far as it will turn. Now remove from the right side of the cabinet the metal button, and, with a screw driver inserted through the hole, tighten the locking adjustment screw "C". It is VERY IMPORTANT that this locking screw is turned until it is ABSOLUTELY TIGHT. If a screw driver is not available, the locking screw can be tightened by reaching in from the back of the cabinet, rotate the locking screw shaft to the right (clockwise) until thoroughly tight.

This screw will lock in place all the stations you have selected on the automatic tuner levers. (Note: Locking screw "C" is loose when radio is shipped from factory).

If you should desire to change any station you selected to another, loosen the locking screw "C" four or five complete turns; select the new station as explained. (Note: If the dial mechanism works hard when setting up a new station for one of the automatic tuner levers, it is due to the locking screw being too tight. Loosen the locking screw "C" until the dial mechanism works freely with the tuner lever pressed down.)

BE SURE TO RETIGHTEN THE LOCKING SCREW; otherwise the stations you have selected will not stay adjusted to the levers.

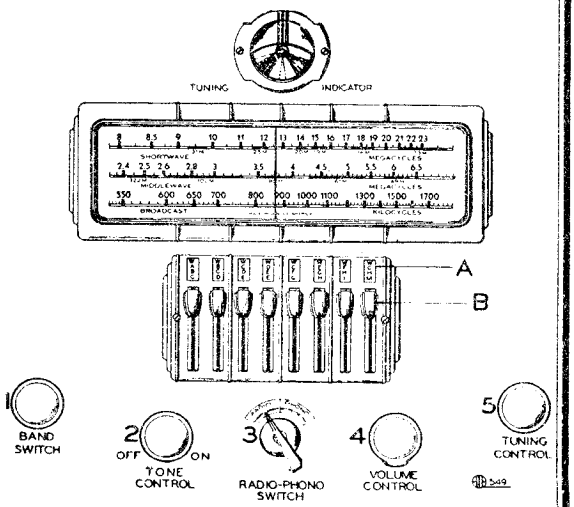

FIG. 2—FRONT VIEW

©John F. Rider, Publisher

BELMONT RADIO CORP.

MODEL 1170C
Serial 7C561750 up
Schematic, Socket
Trimmers, Parts

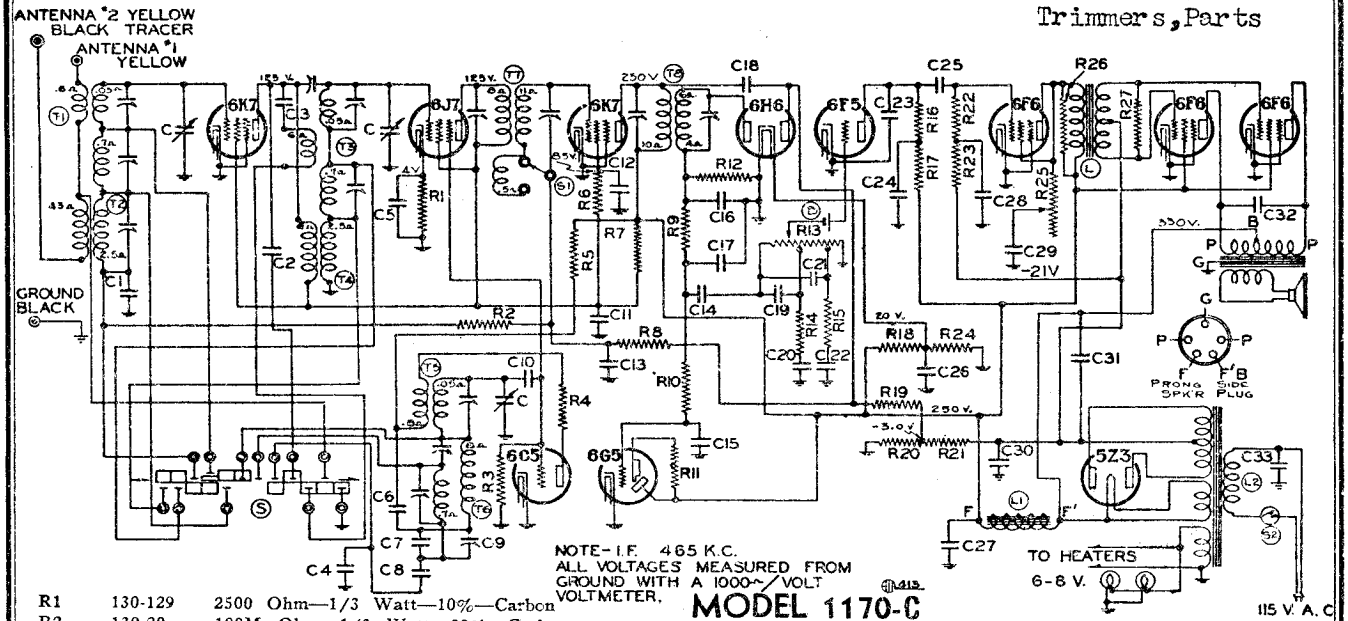

NOTE—I.F. 465 K.C.
ALL VOLTAGES MEASURED FROM GROUND WITH A 1000~/VOLT VOLTMETER.

MODEL 1170-C
(Serial No. 7C561750 and up)

R1	130-129	2500 Ohm—1/3 Watt—10%—Carbon
R2	130-20	100M Ohm—1/3 Watt—20%—Carbon
R3	130-12	50M Ohm—1/3 Watt—20%—Carbon
R4	130-60	100 Ohm—1/3 Watt—20%—Carbon
R5	130-77	10M Ohm—1 Watt—20%—Carbon
R6	130-76	30M Ohm—1/3 Watt—20%—Carbon
R7	130-88	10M Ohm—2 Watt—20%—Wire Wound
R8	130-19	1 Megohm—1/3 Watt—20%—Carbon
R9	130-111	100M Ohm—1/3 Watt—20%—Carbon
R10	130-4	3 Megohm—1/3 Watt—20%—Carbon
R11	130-110	1 Megohm—1/10 Watt—10%—Carbon
R12	130-186	250M Ohm—1/10 Watt—20%—Carbon
R13	101-36	1 Megohm—Volume Control
R14	130-22	5M Ohm—1/3 Watt—20%—Carbon
R15	130-85	3M Ohm—1/3 Watt—20%—Carbon
R16	130-20	100M Ohm—1/3 Watt—20%—Carbon
R17	130-20	100M Ohm—1/3 Watt—20%—Carbon
R18	130-130	100M Ohm—½ Watt—10%—Carbon
R19	130-3	500M Ohm—1/3 Watt—20%—Carbon
R20	106-31	30 Ohm—Muter
R21	106-31	175 Ohm—Muter
R22	130-45	250M Ohm—1/3 Watt—20%—Carbon
R23	130-45	250M Ohm—1/3 Watt—20%—Carbon
R24	130-82	10M Ohm—1/3 Watt—10%—Carbon
R25	101-40	5000 Ohm—Tone Control
R26	130-131	20M Ohm—½ Watt—10%—Carbon
R27	130-21	20M Ohm—1/3 Watt—20%—Carbon

Note—R-20 and R21 in one unit No. 106-31.
R-9 and R12 in Output I. F. Can

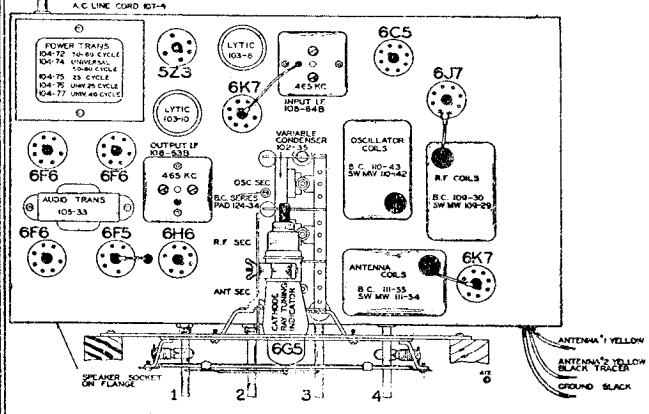

Vol. Control On-Off Switch | Tone Control and High Fidelity Sw. | Tuning Control | Band Switch

FIG. 1—TOP VIEW

C1	100-9	.05x200 Volt—25%
C2	129-59	.0003 Mica—5%—MT-O
C3	129-39	.00005 Mica—20%—MT-O
C4	129-69	.0023 Mica—2½%—MT-O
C5	100-9	.05x200 Volt—25%
C6	100-13	.05x400 Volt—25%
C7	129-57	.0005 Mica—5%—MT-O
C8	129-55	.0034 Mica—2½%—MT-O
C9	124-34	200 Mmf. Working Cap. Adjustable
C10	129-31	.000025 Mica—15%—MT-O Pad.
C11	100-41	.25x400 Volt—20%
C12	100-11	.01x400 Volt—25%
C13	100-9	.05x200 Volt—25%
C14	100-22	.05x200 Volt—25%
C15	100-11	.01x400 Volt—25%
C16	129-39	.00005 Ceramicon—20%
C17	129-60	.00015 Mica—20%—MT-O
C18	129-3	.00002 Mica—20%—MT-O
C19	129-2	.0005 Mica—20%—MT-O
C20	100-22	.05x200 Volt—25%
C21	129-60	.00015 Mica—20%—MT-O
C22	100-22	.05x200 Volt—25%
C23	129.5	.0001 Mica—20%—MT-O
C24	100-1	.1x400 Volt—25%
C25	100-13	.05x400 Volt—25%
C26	100-19	.006x600 Volt—25%
C27	103-8	14 Mfd.—400 Volt—Elecrolytic
C28	100-20	.1x200 Volt—25%
C29	100-45	.1x600 Volt—25%
C30	100-20	.1x200 Volt—25%
C31	103-10	30 Mfd. — 450 Volt — Electrolytic
C32	100-32	.0005x1000 Volt—20%
C33	100-61	.02x600 Volt—Bakelite Micamold

Note—C16 in Output I. F. Can.

B1	116-22	Bias Cell
C	102-35	One Section of Three Gang Condenser
T1	111-54	MW and SW Antenna Coil Assem.
T2	111-55	Broadcast Antenna Coil Assem.
T3	109-29	MW and SW R.F. Coil Assem.
T4	109-30	Broadcast R.F. Coil
T5	110-42	MW and SW Osc. Coil Assem.
T6	110-43	Broadcast Osc. Coil Assem.
T7	108-64B	Input I. F. Coil—465 KC.
T8	108-63B	Output I. F. Coil—465 KC.
L	105-33	Andio Transformer
L1	114-47	Speaker (Field Resistance 1225 Ohm)
L2	104-72	Power Transformer (50-60 Cycle)
S	125-18	Band Switch
S1		Fidelity Switch on Tone Control
S2		On-Off Switch on Volume Control

BAND	DIAL SCALE	FREQUENCY RANGE
Broadcast	Outer Scale	535 to 1720 K.C. (Kilocycles)
Middle Wave	Center Scale	1690 to 5300 K.C. (Kilocycles)
Short Wave	Inner Scale	5.3 to 18.1 M.C. (Megacycles)

©John F. Rider, Publisher

MODEL 1170C
Trimmers, Alignment

BELMONT RADIO CORP.

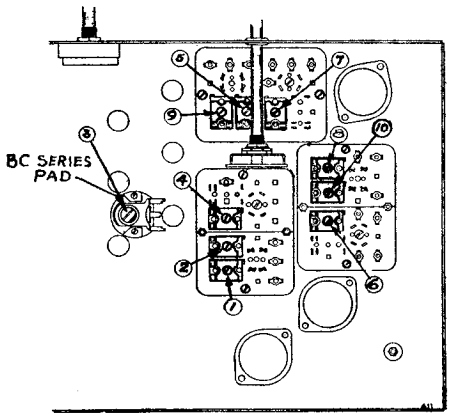

FIG. 3.—BOTTOM VIEW SHOWING TRIMMERS

ALIGNING INSTRUCTIONS:

CAUTION:

No aligning adjustments should be attempted without first thoroughly checking over all other possible causes of trouble, such as poor installations, open or grounded antenna systems, low line voltages, defective tubes, condensers and resistors. In order to properly align this chassis, an oscillator (generator) is absolutely necessary. No aligning adjustments should be attempted with the chassis in the cabinet. To remove the knobs, pull them off and to take the chassis out of the cabinet, remove the four bolts by which it is fastened.

RESONANCE INDICATOR:

Use as a resonance indicator an output meter connected across the primary of the speaker input transformer or by means of an adapter between the plate and cathode terminals of the 5 prong speaker socket. Maximum deflection of the meter indicates resonance. Use only enough signal to get a readily readable output. A low range output meter or the low scale of the multi-range meter should be used.

DUMMY ANTENNAS:

The following dummy antennas are used in aligning and are referred to in the following alignment instructions as "Dummy 1," "Dummy 2," and "Dummy 3."

Dummy 1: (I.F.)—Consists of a .1 mfd. condenser connected in series with the external oscillator.

Dummy 2: (Broadcast)—Consists of a 200 mmfd. condenser and a 20 ohm resistor connected in series with each other and in series with the external oscillator.

Dummy 3: (Middle and Short Wave)—Consists of a .1 mfd. condenser and a 400 ohm resistor connected in series with each other and in series with the external oscillator.

ALIGNING I.F. TRANSFORMERS (465 K.C.)

Part No. 108-63B Output I. F. Transformer
Part No. 108-64B Input I. F. Transformer

These I.F. transformers have two adjustments, both of which are accessible from the top of chassis (see top view Fig. 1).

1. With volume control full on, (the extreme right of its rotation), the band changing switch in the broadcast position, (extreme left of its rotation), the tone control on "Hi" part of the sharp position (as much right rotation as possible without operating the Hi Fidelity switch), and with the variable condenser set to approximately 1400 kilocycles, make the following adjustments:

   (a) Connect external oscillator set at 465 kilocycles, in series with "Dummy 1," to the control grid cap of the type 6K7 tube, located between the two I.F. transformers, and adjust the output I.F. transformer 108-63B to resonance.

   (b) With "Dummy 1" still connected, move oscillator output clip from grid of 6K7 to grid cap to 6J7 and adjust input I.F. transformer (108-64B) to resonance.

   (c) With oscillator still connected to 6J7, re-adjust output I.F. transformer if necessary.

BROADCAST BAND ALIGNMENT:

535 to 1720 Kilocycles

1. With band changing switch in the broadcast position, extreme left of its rotation, and with external oscillator set at 600 kilocycles and connected in series with "Dummy 2" to the tan antenna and black ground lead, make the following adjustments:

   (a) Adjust broadcast series pad (adjustment number 3) to resonance with oscillator. Keep set in tune with oscillator by slowly rocking to and fro the variable condenser until maximum output is obtained. Note: This adjustment is accessible from the top of the chassis and is located between the variable condenser and the 108-63 output I.F. transformer. See top view, Fig. 1.

   (b) Re-set external oscillator to 1400 K.C., move dial pointer to 1400 K.C. and adjust oscillator (adjustment number 4), R.F. (adjustment number 6) and antenna (adjustment number 7) to resonance. See bottom view for location of these adjustments, Fig. 3.

   (c) Repeat adjustments "a" and "b" until sensitivity is at its maximum.

   (d) Check for tracking and sensitivity at 1000 kilocycles. **Under no circumstances bend plates of variable condenser to correct tracking.**

SHORT WAVE BAND ALIGNMENT:

5.3 to 18.1 Megacycles

1. With band changing switch in the short wave position, extreme right of its rotation, and with external oscillator set at 17 megacycles and connected in series with "Dummy 3" to the tan antenna and black ground lead, make the following adjustments:

   (a) Move dial pointer to 17 megacycles and adjust short wave oscillator (adjustment number 1), short wave R.F. (adjustment number 8) and short wave antenna (adjustment number 9) to resonance.

   (b) Re-set external oscillator to 6 megacycles and pick up signal by rotating variable condenser and check for sensitivity.

NOTE: It is extremely necessary in making all of these adjustments that the fundamental oscillator signal be tuned in and not the image frequency which will fall below the fundamental on the receiver dial. As an example of this a fundamental 18.3 megacycle can be tuned in not only at 18.3 on the dial, but also at approximately 17.4 megacycles.

MIDDLE WAVE BAND ALIGNMENT:

1690 to 5300 Kilocycles

1. With band changing switch in the middle wave position, center of its rotation, and with external oscillator set at 5 M.C. and connected in series with "Dummy 3" to the tan antenna and black ground lead, make the following adjustments:

   (a) Rotate condenser, pick up signal and adjust middle wave R.F. (adjustment number 10), middle wave antenna (adjustment number 5) and middle wave oscillator (adjustment number 2) to resonance.

   (b) Re-check broadcast alignment and if it is found necessary to re-adjust either R.F. or antenna trimmers, repeat the 17 M.C. short wave and 5 M.C. middle wave adjustments.

©John F. Rider, Publisher

BELMONT RADIO CORP.

MODEL 1171 Series A
Schematic, Voltage
Socket, Trimmers, Parts

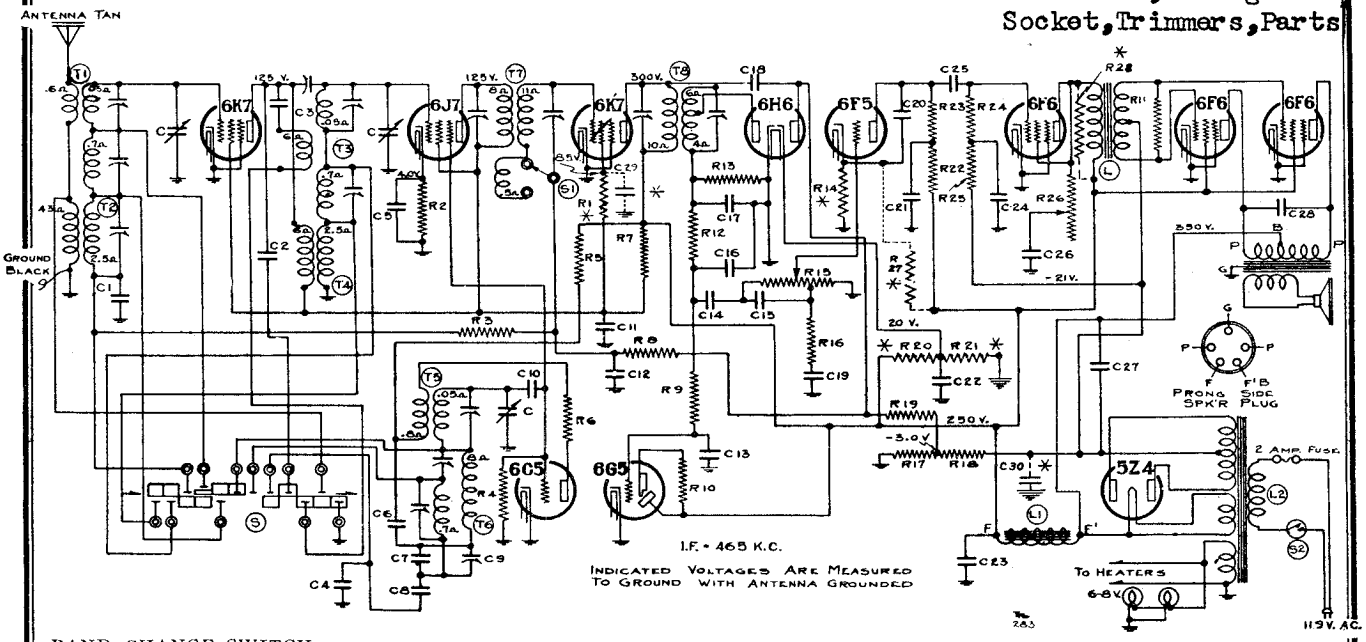

BAND CHANGE SWITCH
THREE POSITIONS, ROTATING
CLOCKWISE ARE:
1st BROADCAST: 535-1720 K.C.
2nd MIDDLE WAVE: 1690-5300 K.C.
3rd SHORT WAVE: 5.2-18.1 M.C.

TUNING RANGE—

Standard Broadcast Band
535-1720 Kilocycles.

Middle Wave Band
1690-5300 Kilocycles
Short Wave Band
5.2-18.1 Megacycles.

Part No.	Description
	RESISTORS
*R1 130-76	30M Ohm—⅓ Watt—20%—Carbon
R2 130-129	2500 Ohm—⅓ Watt—10%—Carbon
R3 130-20	100M Ohm—⅓ Watt—20%—Carbon
R4 130-12	50M Ohm—⅓ Watt—20%—Carbon
R5 130-77	10M Ohm—1 Watt—20%—Carbon
R6 130-60	100 Ohm—⅓ Watt—20%—Carbon
R7 130-88	10M Ohm—2 Watt—20%—Wire Wound
R8 130-19	1 meg Ohm—⅓ Watt—20%—Carbon
R9 130-4	3 meg Ohm—⅓ Watt—20%—Carbon
R10 130-110	1 meg Ohm—1/10 Watt—10%—Carbon
R11 130-21	20M Ohm—⅓ Watt—20%—Carbon
R12 130-20	100M Ohm—⅓ Watt—20%—Carbon
R13 130-20	100M Ohm—⅓ Watt—20%—Carbon
*R14 130-70	500 Ohm—⅓ Watt—10%—Carbon
R15 101-60	1 meg Ohm—Volume Control
R16 130-22	5M Ohm—⅓ Watt—20%—Carbon
R17 106-31	30 Ohm—Muter
R18 106-31	175 Ohm—Muter
R19 130-3	500M Ohm—⅓ Watt—20%—Carbon
*R20 130-130	100M Ohm—⅓ Watt—10%—Carbon
*R21 130-82	10M Ohm—⅓ Watt—10%—Carbon
R22 130-20	100M Ohm—⅓ Watt—20%—Carbon
R23 130-20	100M Ohm—⅓ Watt—20%—Carbon
R24 130-45	250M Ohm—⅓ Watt—20%—Carbon
R25 130-45	250M Ohm—⅓ Watt—20%—Carbon
R26 101-62	5000 Ohm Tone Control
*R27 130-130	100M Ohm—⅓ Watt—10%—Carbon
*R28 130-131	20M Ohm—⅓ Watt—10%—Carbon

NOTE: R17 and R18 in one Unit—No. 106-31.

		CONDENSERS
C1	100-9	.05 x 200 Volt—25%
C2	129-59	.0003 Mica—5%—MT—0
C3	129-39	.00005 Mica—20%—MT—0
C4	129-69	.0023 Mica—2½%—MT—0
C5	100-9	.05 x 200 Volt—25%
C6	100-13	.05 x 400 Volt—25%
C7	129-57	.0005 Mica—5%—MT—0
C8	129-55	.0034 Mica—2½%—MT—0
C9	124-34	200 mmf. Working cap. adjustable Pad
C10	129-31	.000025 Mica—15%—MT—0
C11	100-41	.25 x 400 Volt—20%
C12	100-9	.05 x 200 Volt—25%
C13	100-11	.01 x 400 Volt—25%
C14	100-22	.05 x 200 Volt—25%
C15	129-12	.00025 Mica—20%—MT—0
C16	129-60	.00015 Mica—20%—MT—0
C17	129-60	.00015 Mica—20%—MT—0
C18	129-3	.00002 Mica—20%—MT—0
C19	100-9	.05 x 200 Volt—25%
C20	129-5	.0001 Mica—20%—MT—0
C21	100-20	.1 x 200 Volt—25%
C22	100-19	.006 x 600 Volt—25%
C23	103-8	14 mfd.—400 Volt—Electrolytic
C24	100-20	.1 x 200 Volt—25%
C25	100-13	.05 x 400 Volt—25%
C26	100-45	.1 x 600 Volt—25%
C27	103-10	30 mfd. x 450 Volt—Electrolytic
C28	100-32	.0005 x 1000 Volts—20%
*C29	100-11	.01 x 400 Volts—25%
*C30	100-20	.1 x 200 Volt—25%

		PARTS
C	102-37	One section of three gang condenser
T1	111-54	MW and SW Antenna Coil Assem.
T2	111-55	Broadcast Antenna Coil Assem.
T3	109-29	MW and SW R.F. Coil Assem.
T4	109-30	Broadcast R.F. Coil
T5	110-42	MW and SW Osc. Coil Assem.
T6	110-43	Broadcast Osc. Coil Assem.
T7	108-64	Input I.F. Coil—465 Kc.
T8	108-63	Output I.F. Coil—465 Kc.
L	105-33	Audio Transformer
L1	114-47C	Speaker (Field Resist. 1225 ohm) Hot
L2	104-72	Power Transformer (50-60 Cycle)
S	125-18	Band Switch
S1	101-40	Fidelity Switch on Tone Control
S2	101-47	On-Off Switch on Volume Control

NOTE: Resistors and Condensers which are prefixed with an asterisk (*) on the circuit diagram and parts list were added or the values changed during production to meet certain conditions.

Resistors R1, R27, R28, and Condensers C29, C30 were added to correct certain variances of tube characteristics. Resistors R14, R20, R21 the values were changed. In some chassis the values of these resistors are as follows:

R14—2500 Ohm—⅓ Watt
R20—200M Ohm..⅓ Watt
R21—20M Ohm—⅓ Watt

Present values of these resistors are:

R14—500 Ohm—⅓ Watt
R20—100M Ohm—⅓ Watt
R21—10M Ohm—⅓ Watt

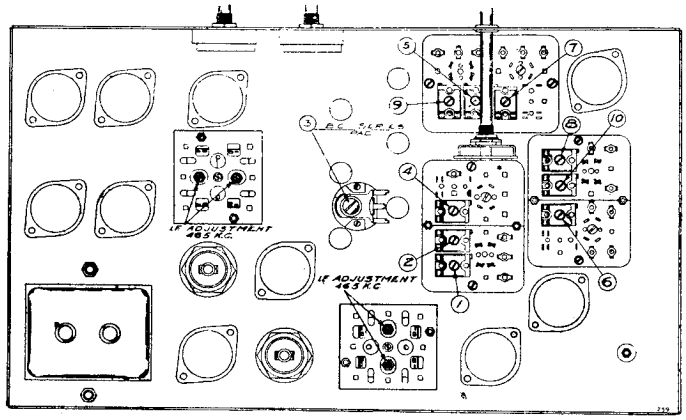

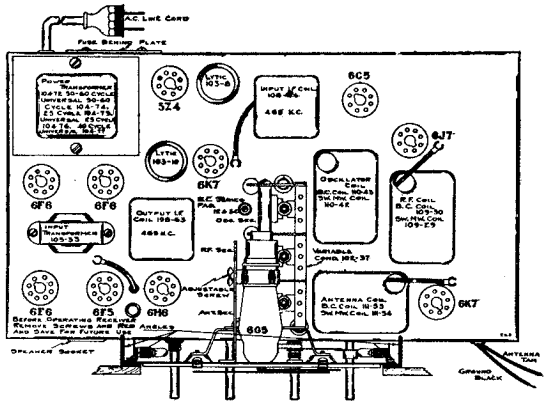

FIG. 1—BOTTOM VIEW SHOWING TRIMMERS

©John F. Rider, Publisher

MODEL 1171 Series A
Alignment Notes

BELMONT RADIO CORP.

Transformers are available and chassis are sometimes equipped with universal transformers for operation on 25, 40 and 60 cycles and with primary taps for 108, 127, 150, 225, and 260 volts, (see instructions) and also sometimes equipped with 25 cycle transformers with 105-115 volt or 220 volt primaries, not universals.

SERVICE NOTES

NOTE:

Attention is called to the circuit diagram contained in this manual. Several minor changes were made during production of this model to correct certain conditions. These changes are shown on the circuit diagram in dotted lines and explained in detail. Some of the chassis were equipped with 5Z3 rectifier tubes in place of the 5Z4 and do not have a fuse assembly in the power line.

Voltages taken from different points of circuit to chassis are measured with volume control full on, all tubes in their sockets and speaker connected, with a volt meter having a resistance of 1000 ohms per volt. These voltages are clearly indicated on the circuit diagram.

IN ORDER TO PREVENT SIGNAL FROM ACTING UPON AVC AND AFFECTING ACCURACY OF VOLTAGE MEASUREMENTS, AERIAL AND GROUND LEADS SHOULD BE SHORT CIRCUITED WHILE MAKING MEASUREMENTS.

All voltages are to be measured with 115 volts on the primary of the power transformer.

Resistances of coils and transformer windings are indicated in ohms on schematic circuit diagrams.

To check for open by-pass condensers, shunt each condenser with another condenser of the same capacity and voltage rating, which is known to be good, until the defective unit is located.

Excessive hum, stuttering, low volume and a reduction in all D.C. voltages is usually caused by a shorted electrolytic condenser, open by-pass condensers frequently cause oscillation and distorted tone.

This chassis is protected against damage from faulty tubes or abnormal line conditions by a fuse in the primary circuit.

If when set is turned on pilot lights do not light, look for a blown fuse.

This fuse is made accessible for replacement by removing fuse cover located on back flange of chassis, replace only with a 2 ampere fuse. If replacement fuse blows out, check tubes, (particularly 5Z4 rectifier) circuit, repair or replace defective tubes or parts.

NEVER ATTEMPT TO REPLACE FUSE WITHOUT FIRST DISCONNECTING POWER.

NEVER REPLACE WITH FUSE OTHER THAN 2 AMPERE RATING.

ALIGNING INSTRUCTIONS

Dummy Antennas

The following dummy antennas are used in aligning and are referred to in the following alignment instructions as "Dummy 1", "Dummy 2", and "Dummy 3".

Dummy 1: (I.F.)—Consists of a .1 mfd. condenser connected in series with the external oscillator.

Dummy 2: (Broadcast)—Consists of a 200 mmfd. condenser and a 20 ohm resistor connected in series with each other and in series with the external oscillator.

Dummy 3: (Intermediate and Short Wave)—Consists of a .1 mfd. condenser and a 400 ohm resistor connected in series with each other and in series with the external oscillator.

Resonance Indicator:

Use as a resonance indicator an output meter connected across the primary of the speaker input transformer or by means of an adapter between the plate and cathode terminals of the 5 prong speaker socket. Maximum deflection of the meter indicates resonance. Use only enough signal to get a readily readable output. A low range output meter or the low scale of a multi-range meter should be used.

CAUTION:

No aligning adjustments should be attempted without first thoroughly checking over all other possible causes of trouble, such as poor installations, open or grounded antenna systems, low line voltages, defective tubes, condensers and resistors. In order to properly align this chassis, an oscillator (generator) is absolutely necessary. No aligning adjustments should be attempted with the chassis in the cabinet. To remove the knobs, pull them off and to take the chassis out of the cabinet, remove the four bolts by which it is fastened.

ALIGNING I.F. TRANSFORMERS (465 K.C.)

Part No. 108-63 Output I.F. Transformer
Part No. 108-64 Input I.F. Transformer

These I.F. transformers have two adjustments, both of which are accessible from the underside of chassis (see bottom view Fig. 1).

1. With volume control full on, (the extreme right of its rotation), the band changing switch in the broadcast position, (extreme left of its rotation), the tone control on "Hi" part of the sharp position (as much right rotation as possible without operating the Hi Fidelity switch), and with the variable condenser set to approximately 1400 kilocycles, make the following adjustments:
   (a) Connect external oscillator set at 465 kilocycles, in series with "Dummy 1", to the control grid cap of the type 6K7 tube, located between the two I.F. transformers, and adjust the output I.F. transformer 108-63 to resonance.
   (b) With "Dummy 1" still connected, move oscillator output clip from grid of 6K7 to grid cap to 6J7 and adjust input I.F. transformer (108-64) to resonance.
   (c) With oscillator still connected to 6J7, re-adjust output I.F. transformer if necessary.

ALIGNMENT PROCEDURE

The following adjustments to be made after the I.F.'s have been aligned as explained above.

BROADCAST BAND ALIGNMENT:

1. With band changing switch in the broadcast position, extreme left of its rotation, and with external oscillator set at 600 kilocycles and connected in series with "Dummy 2" to the tan antenna and black ground lead, make the following adjustments:
   (a) Adjust broadcast series pad (adjustment number 3) to resonance with oscillator. Keep set in tune with oscillator by slowly rocking to and fro the variable condenser until maximum output is obtained. Note: This adjustment is accessible from the top of the chassis and is located between the variable condenser and the 108-63 output I.F. transformer. See top view, Fig. 3.
   (b) Re-set external oscillator to 1400 K.C., move dial pointer to 1400 K.C. and adjust oscillator (adjustment number 4), R.F. (adjustment number 6) and antenna (adjustment number 7) to resonance. See bottom view for location of these adjustments, Fig. 1.
   (c) Repeat adjustments "a" and "b" until sensitivity is at its maximum.

NOTE: IT IS EXTREMELY NECESSARY IN MAKING ALL OF THESE ADJUSTMENTS THAT THE FUNDAMENTAL OSCILLATOR SIGNAL BE TUNED IN AND NOT THE IMAGE FREQUENCY WHICH WILL FALL BELOW THE FUNDAMENTAL.

SHORT WAVE BAND ALIGNMENT:

1. With band changing switch in the short wave position, extreme right of its rotation, and with external oscillator set at 17 megacycles and connected in series with "Dummy 3" to the tan antenna and black ground lead, make the following adjustments:
   (a) Move dial pointer to 17 megacycles and adjust short wave oscillator (adjustment number 1), short wave R.F. (adjustment number 8) and short wave antenna (adjustment number 9) to resonance.
   (b) Re-set external oscillator to 6 megacycles and pick up signal by rotating variable condenser and check for sensitivity.

MIDDLE WAVE BAND ALIGNMENT:

1. With band changing switch in the middle wave position, center of its rotation, and with external oscillator set at 5 M.C. and connected in series with "Dummy 3" to the tan antenna and black ground lead, make the following adjustments:
   (a) Rotate condenser, pick up signal and adjust middle wave R.F. (adjustment number 10), middle wave antenna (adjustment number 5) and middle wave oscillator (adjustment number 2) to resonance.
   (b) Re-check broadcast alignment and if it is found necessary to re-adjust either R.F. or antenna trimmers, repeat the 17 M.C. short wave and 5 M.C. middle wave adjustments.

©John F. Rider, Publisher

BELMONT RADIO CORP.

MODEL 1175 Series A
Schematic, Voltage
Parts

IN ORDER TO PREVENT SIGNAL FROM ACTING UPON AVC AND AFFECTING ACCURACY OF VOLTAGE MEASUREMENTS, AERIAL AND GROUND LEADS SHOULD BE SHORT CIRCUITED WHILE MAKING MEASUREMENTS.

Voltages taken from different points of circuit to chassis are measured with volume control full on, all tubes in their sockets and speaker connected, with a voltmeter having a resistance of 1000 ohms per volt. These voltages are clearly indicated on the circuit diagram.

FREQUENCY RANGE 5.35 to 18.1 M.C. CHASSIS MODEL 1175 SERIES A (Serial No. 7M920500 and up)

535 to 1720 K.C.
1695 to 5500 K.C.

Code	Part No.	Description
R1	130-20	100M ohm - 1/3 w. - 20%
R2	130-166	150 ohm - 1/3 w. - 10%
R3	130-129	2500 ohm - 1/3 w. - 10%
R4	130-60	100 ohm - 1/3 w. - 20%
R5	130-12	50M ohm - 1/3 w. - 20%
R6	130-19	1 megohm - 1/3 w. - 20%
R7	130-133	155M ohm - 1/2 w. - 20%
R8	106-46	2900 ohm - resistor strip
R9	130-4	3 megohm - 1/3 w. - 20%
R10	130-201	25M ohm - 1/10 w. - 20%
R11	130-110	1 megohm - in tuning indicator socket 1/10 w. - 20%
R12	130-186	250M ohm - 1/10 w. - 20%
R13	130-12	50M ohm - 1/3 w. - 20%
R14	106-46	600 ohm - Resistor Strip
R15	130-22	5M ohm - 1/3 w. - 20%
R16	130-85	3M ohm - 1/3 w. - 20%
R17	130-3	500M ohm - 1/3 w. - 20%
R18	106-45	2500 ohm - resistor strip
R19	101-102	1 megohm - volume control
R20	130-37	750M ohm - 1/3 w. - 20%
R21	130-45	250M ohm - 1/3 w. - 20%
R22	101-103	300M ohm - Tone control
R23	130-103	100M ohm - 1/3 w. - 10%
R24	106-47	Resistor Strip - 11 ohm
R25	106-47	22 ohm - Resistor strip
R26	106-47	170 ohm - Resistor strip
R27	130-45	250M ohm - 1/3 w. - 20%
R28	130-37	750M ohm - 1/3 w. - 20%
R29	130-45	250M ohm - 1/3 w. - 20%
R30	130-103	100M ohm - 1/3 w. - 10%
R31	130-82	10M ohm - 1/3 w. - 10%
R32	130-103	100M ohm - 1/3 w. - 10%
R33	130-45	250M ohm - 1/3 w. - 20%
R34	130-45	250M ohm - 1/3 w. - 20%
R8, R14 and R18		in same unit
R24, R25 and R26		in same unit
R10 and R12		in output I.F. Can

C	102-66	3 gang variable Condenser
C1	129-40	.0001 - 10% Mica
C2	100-22	.05 x 200 v. - 25%
C3	100-53	.25 x 400 v. - 20%
C4	129-34	.0002 - 5% Mica
C5	129-38	.00005 - 10% Mica
C6	129-38	.00005 - 10% Mica
C7	100-25	.002 x 600 v. - 25%
C8	124-35	.00074 Series Pad
C9	129-92	.0033 - 2-1/2% Compression type condenser
C10	129-90	.0023 - 2-1/2% Compression type condenser
C11	100-33	.1 x 200 v. - 50 - 10%
C12	100-22	.05 x 200 v. - 25%
C13	100-78	.01 x 200 v. - 25%
C14	129-3	.00002 - 20% Mica
C15	129-39	.00005 - 20% Ceramicon
C16	129-38	.00005 - 10% Mica
C17	100-9	.05 x 200 v. - 25%
C18	129-3	.00002 - 20% Mica
C19	100-22	.05 x 200 v. - 25%
C20	129-38	.00005 - 10% Mica
C21	100-19	.006 - 600 v. - 25%
C22	100-78	.01 x 200 v. - 25%
C23	100-11	.01 x 400 v. - 25%
C24	100-9	.05 x 200 v. - 25%
C25	129-40	.0001 - 10% Mica
C26	100-12	.003 x 600 v. - 25%
C27	100-26	.02 x 400 v. - 25%
C28	100-33	.1 x 200 v. - 50 - 10%
C29	103-10	30 mfd. - 450 w.v. lytic
C30	100-13	.05 x 400 v. - 25%
C31	100-80	.05 x 400 v. - 25%
C32	103-10	30 mfd. - 450 w.v. lytic
C33	100-33	.1 x 200 v. - 50 - 10%
C34	100-32	.0005 - 1000 v. - 20%
C35	100-61	.02 x 600 v. - 20% Bakelite

PARTS

T1	111-90	SW - MW - Antenna Coil
T2	111-68	BC - Antenna Coil
T3	109-32B	SW - MW - R.F. Coil
T4	109-33	BC - R.F. Coil
T5	110-53B	SW - MW Oscillator Coil
T6	110-52B	BC - Oscillator Coil
T7	108-113	Input I.F. 465 kc.
T8	108-114	Output I.F. 465 kc.
T9	105-56	Output Transformer
T10	114-107	12" Dynamic Speaker
T11	104-117	Power Transformer 50/60 cycle
S1	125-44	Band Switch
S2		Hi Fi Switch on tone control
S3		Off-on switch on volume control
S4	125-14	Mute Switch
P1	107-94	6-8 v. Pilot lights

For conventional types of antennas connect the tan wire to the antenna lead and the **yellow with black tracer** and the **black wire** together to the ground lead.

When a doublet antenna is used connect the tan wire and **the yellow with black tracer wire to the doublet antenna and the solid black wire** to the ground lead. (See Fig. 1—Top View).

Mica condensers are coded with an additional dot indicating tolerance:

Color of Dot	Tolerance percent
White	2½ %
Green	5%
Blue	10%
Yellow	15%
Red	20%
None	More Than 20%

Receivers of this model which are to be used on voltages or frequencies other than 105-115 volts, 60 cycles are so marked. The power consumption of this receiver is 125 watts.

All voltages are to be measured with 115 volts on the primary of the power transformer.

©John F. Rider, Publisher

MODEL 1175 Series A
Trimmers, Tuner

BELMONT RADIO CORP.

MODEL 1175 SERIES A
(Serial No. 7M920500 and up)

The tube complement of this chassis consists of the following metal and octal base glass tubes which are interchangeable with metal tubes:
1—Type 6K7 Remote cut-off pentode R.F. amplifier
1—Type 6J7 Pentode first detector
1—Type 6C5 Oscillator
1—Type 6K7 Remote cut-off pentode I.F. amplifier
1—Type 6H6 Duplex diode second detector and A.V.C.
1—Type 6F5 First audio amplifier
1—Type 6J5 Phase Inverter stage
2—Type 6F6 Output pentodes in push-pull
1—Type 5U4 High vacuum rectifier
1—Type 6U5 Cathode-Ray Tuning Indicator.

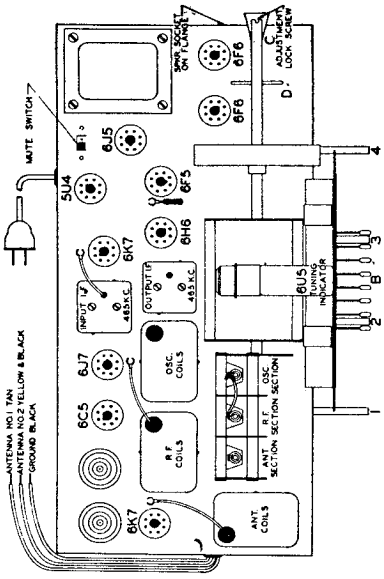

FIG. 1—TOP VIEW

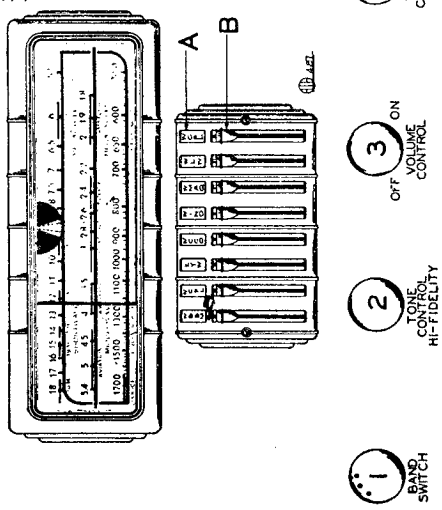

FIG. 2—FRONT VIEW

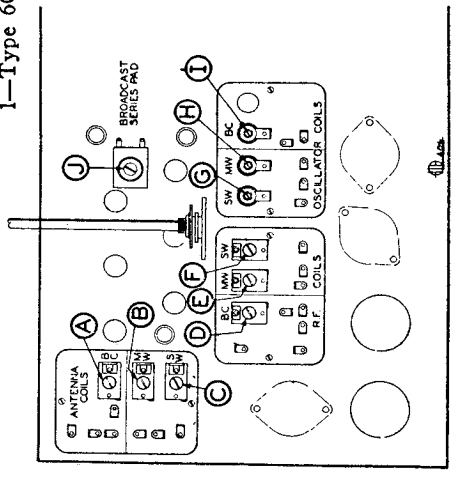

FIG. 3.—BOTTOM VIEW SHOWING TRIMMERS

PROCEDURE FOR SETTING THE AUTOMATIC TUNER LEVERS:

IMPORTANT—READ CAREFULLY BEFORE SETTING THE AUTOMATIC LEVERS:

A mute feature has been incorporated in the automatic tuning mechanism of the Model 1175. The function of this feature is to permit SILENT TUNING from one station to another by means of the automatic tuning levers. When any one of the levers are pressed down, the speaker is automatically disconnected from the radio and NO SIGNAL is heard until the lever is RELEASED.

To facilitate an accurate adjustment of the levers it is desirable to hear the station being tuned in while the lever is being adjusted; therefore a MUTE SWITCH is provided to manually connect or disconnect the silent tuning feature.

Referring to the top view of the radio (Fig. 1 in this manual), THE POSITION OF THE SWITCH (located on the top of the radio chassis alongside the power transformer), IS IMPORTANT.

Set the switch as follows:

WHILE SETTING THE AUTOMATIC LEVERS:
Switch should be snapped to the right (white dot not visible).

AFTER AUTOMATIC LEVERS HAVE BEEN SET:
Switch should be snapped to the left (white dot showing).

There are eight levers on the dial by means of which eight stations may be selected, (See "B", Fig. 2).

Make a list of local stations you tune in regularly; any number up to and including 8.

Punch out from the set of station call letter tabs supplied, the call letters of the stations you have selected.

Above each automatic tuner lever an opening in the escutcheon is provided for inserting the call letter tabs, (See "A" Fig. 2). Any order of grouping may be used, however, it is recommended that the left hand four automatic levers be used for high frequency stations (1750 to 1000 K.C.) and the right hand four automatic levers for low frequency stations (1000 to 540 K.C.).

Insert the call letter tabs in the rectangular openings in the escutcheon above each of the automatic tuner levers. One of the small celluloid tabs supplied should be snapped into place over each of the station call letter tabs.

Press DOWN ALL THE WAY any one of the automatic tuner levers. Holding it down FIRMLY, tune in by means of the tuning knob No. 4 the station indicated on the station call letter tab above this lever. Turn the tuning knob very slowly back and forth (while still holding lever in downward position), noting the width of the shadow indicated on the screen of the cathode-ray tuning eye. Minimum width on the eye indicates the ideal tuning position (resonance). The station will then be clearest and accurately tuned in. Release the lever.

Press down another automatic tuner lever. Holding it down FIRMLY, carefully tune in the station indicated on the call letter tab above this lever. Release this lever.

Follow this procedure until you have selected all of your favorite stations.

Rotate the tuning knob No. 4 to the right (clockwise) as far as it will turn. Now remove from the right side of the cabinet the metal button, and, with a screw driver inserted through the hole, tighten the locking adjustment screw "C". It is VERY IMPORTANT that this locking screw is turned until it is ABSOLUTELY TIGHT. If a screw driver is not available, the locking screw can be tightened by reaching in from the back of the cabinet, and, by means of the pin "D" (see Fig. 1), rotate the locking screw shaft to the right (clockwise) until thoroughly tight.

This screw will lock in place all the stations you have selected on the automatic tuner levers. (Note: Locking screw "C" is loose when radio is shipped from factory).

If you should desire to change any station you selected to another, loosen the locking screw "C" four or five complete turns; select the new station as explained. (Note: If the dial mechanism works hard when setting up a new station for one of the automatic tuner levers, it is due to the locking screw being too tight. Loosen the locking screw "C" until the dial mechanism works freely with the tuner lever pressed down.)

BE SURE TO RETIGHTEN THE LOCKING SCREW; otherwise the stations you have selected will not stay adjusted to the levers.

Snap mute switch to silent tuning position (white dot showing)

©John F. Rider, Publisher

SCHEMATIC CIRCUIT DIAGRAM
BRUNSWICK RADIO CHASSIS M27*

MODELS 1669,1689,2669,2689
BRUNSWICK DIV. MERSMAN BROS. CORP. 3689,4689,5689
Chassis M27
Schematic, Alignment, Parts

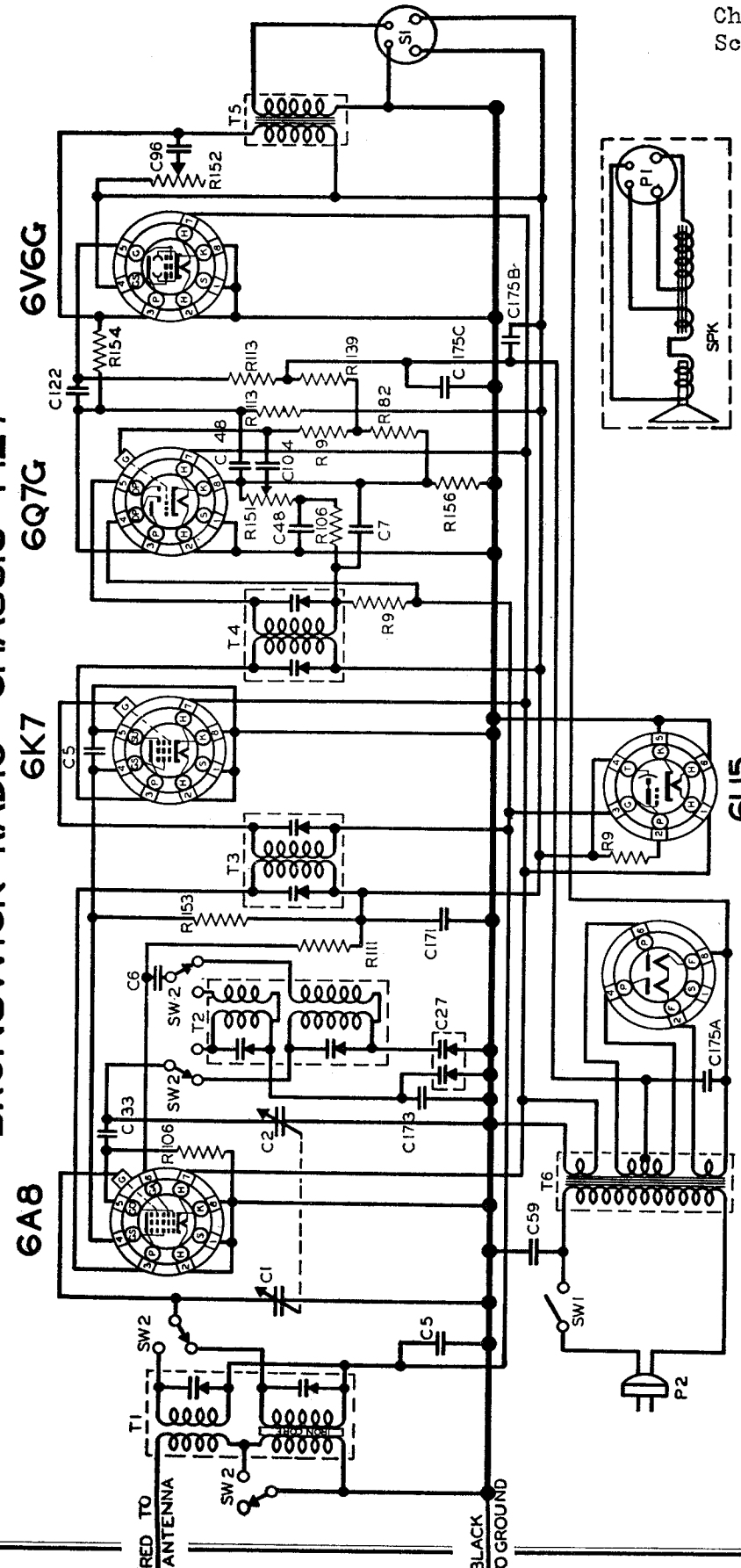

POWER CONSUMPTION 65 WATTS

RESISTORS

R	OHM	W	PART NO
9	1M	1/4	17-2080
82	30	1/4	17-14117
106	50K	1/4	17-14171
111	20K	1/2	17-14176
113	250K	1/4	17-14178
139	100	1	17-14219
151	.5M	VC	17-16008
152	100K	ITC	17-16009
153	30K	1/2	17-14243
154	1.5M	1/4	17-14244
156	35	1/4	17-14246

CONDENSERS

C	CAPACITY	VOLT	PART NO
1	TWO-GANG		17-16005
2	VARIABLE		
5	.05	200	17-14015
6	.002	600	17-2063
7	.0001	600	17-2064
27	DOUBLE PAD.		17-13077
48	.00025	600	17-4207
59	.01	400	17-14615
96	.05	600	17-14121
104	.01	200	17-4206
122	.01	400	17-2189
33	.00005	600	17-14047

C	CAPACITY	VOLT	PART NO
175A	10 MFD.	450	17-14249
175B	10 MFD.	450	
175C	20 MFD.	25	
171	.1	400	17-14238
173	.003	600	17-14247

TRANSFORMERS

T	TYPE	PART NO
1	ANTENNA COIL	00-15997
2	OSCILLATOR COIL	
3	FIRST I.F. COIL	00-15998
4	SECOND I.F. COIL	00-15999
5	OUTPUT TRANS.	00-15996
6	POWER TRANS.	00-15995

MISCELLANEOUS UNITS

SYMBOL	DESCRIPTION	PART NO
L	DIAL LIGHT BULB	17-13904
P1	SPEAKER PLUG	
P2	AC LINE CORD & PLUG ASSEMBLY	17-15791E
S1	SPEAKER SOCKET	17-13249
SPK	SPEAKER (SEE MODEL)	
SW1	AC LINE SWITCH	17-16009
SW2	BAND SWITCH	17-16007

* LEGEND

MODEL NO.	SPEAKER PART NO.
M27-6	17-16046
M27-8	17-16047
M27-10	17-16048

I.F. PEAK 455 K.C.
BROADCAST BALANCE AT 1500 K.C.
PAD AT 600 K.C.
SHORTWAVE BALANCE AT 15 M.C.
CHECK AT 7 M.C.

THE MERSMAN BROS. CORPORATION, INC.
206 LEXINGTON AVE., NEW YORK, N.Y.

©John F. Rider, Publisher

MODEL 8109
Chassis M31
Schematic, Alignment
Parts

BRUNSWICK DIV. MERSMAN BROS. CORP.

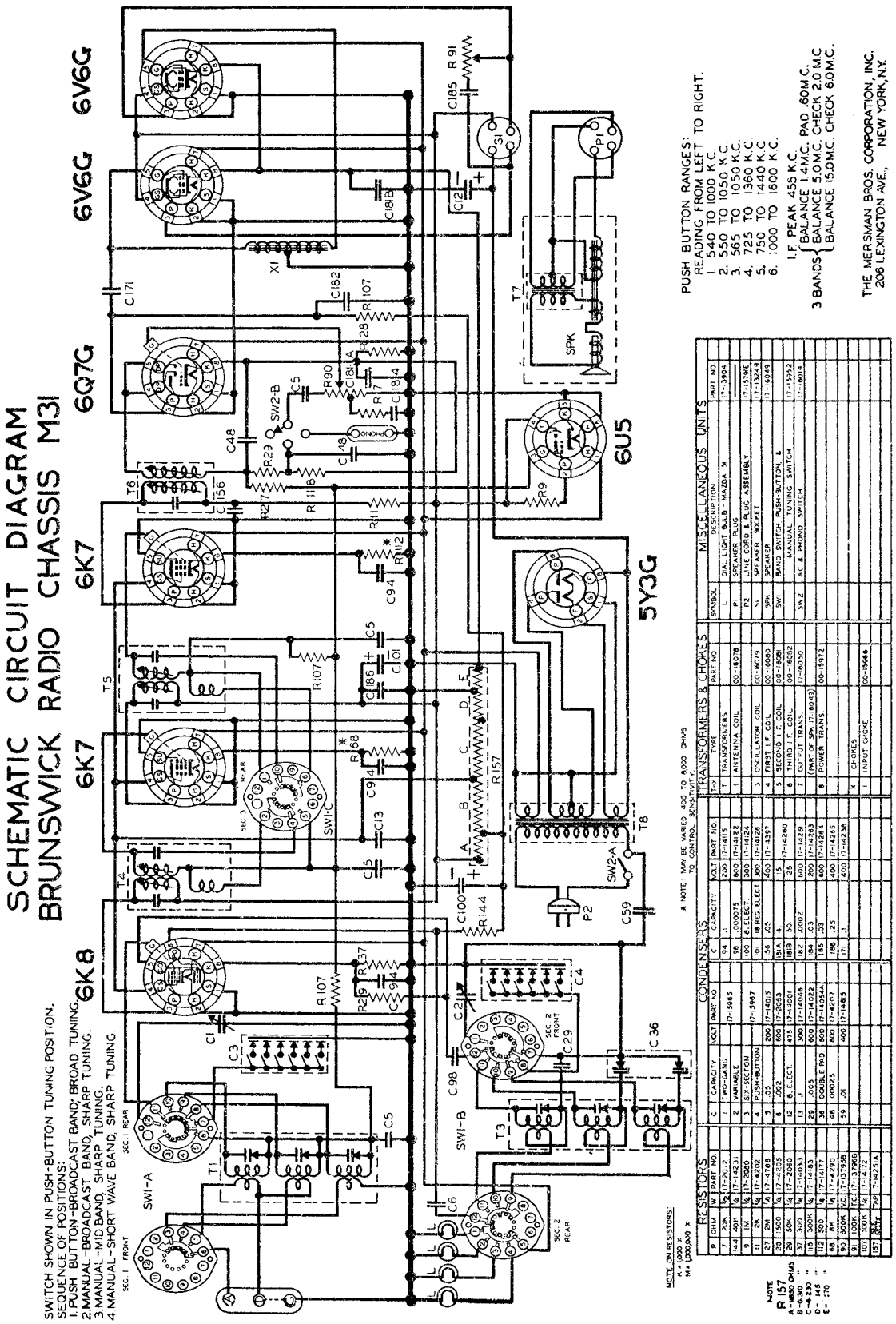

NOTE: MAY BE VARIED 400 TO 8,000 OHMS TO CONTROL SENSITIVITY.

NOTE ON RESISTORS:
K = 1,000 X
M = 1,000,000 X

NOTE
R 157
A = 1850 OHMS
B = 6,310 " "
C = 4,230 " "
D = 145 " "
E = 170 " "

RESISTORS

R	OHMS	W	PART NO.
7	20K	1/2	17-2012
144	40K	1/2	17-14231
9	1M	1/2	17-2060
11	2K	1/2	17-4202
27	2K	1/2	17-4782
28	500	1/2	17-2205
29	50K	1/2	17-2060
37	300	1/2	17-14033
118	300K	1/2	17-14183
112	500	1/2	17-4177
68	8K	1/2	17-4290
90	500K	VC	17-13798B
91	100K	TC	17-13798B
107	100K	1/2	17-4172
157	3000	7W	17-14231A

CONDENSERS

C	CAPACITY	VOLT	PART NO
1	TWO-GANG		17-13985
2	VARIABLE		
3	SIX-SECTION		17-13987
4	PUSH-BUTTON		
5	.05	200	17-14015
6	.002	600	17-2063
12	8. ELECT.	475	17-14001
13	.1	300	17-14046
29	.005	600	17-14042
48	.00025	600	17-14054A
59	.01	400	17-4207
100		400	17-14165
94	.1	200	17-14115
98	.000075	600	17-14212
100	8. ELECT.	300	17-14124
101	18 REG. ELECT	300	17-14126
158	.05	400	17-4397
181A	4.	15	17-14260
181B	30	25	17-14260
182	.0002	600	17-14261
184	.03	200	17-14263
185	.03	600	17-14264
186	.25	400	17-14265
171	.1	400	17-14238

TRANSFORMERS & CHOKES

T-X	TYPE	PART NO
T	TRANSFORMERS	
1	ANTENNA COIL	00-18078
3	OSCILLATOR COIL	00-16079
4	FIRST I.F. COIL	00-16080
5	SECOND I.F. COIL	00-16081
6	THIRD I.F. COIL	00-16082
7	OUTPUT TRANS. (PART OF SPK 17-18049)	17-18050
8	POWER TRANS.	00-15972
X	CHOKES	
1	INPUT CHOKE	00-15966

MISCELLANEOUS UNITS

SYMBOL	DESCRIPTION	PART NO.
L	DIAL LIGHT BULB - MAZDA 51	17-13904
P1	SPEAKER PLUG	
P2	LINE CORD & PLUG ASSEMBLY	17-1579E
S1	SPEAKER SOCKET	17-13249
SPK	SPEAKER	17-16049
SW1	BAND SWITCH PUSH-BUTTON, & MANUAL TUNING SWITCH	17-15952
SW2	AC & PHONO SWITCH	17-18014

POWER CONSUMPTION 110 WATTS

©John F. Rider, Publisher

MODELS 1669,1689,2669,2689
3689,4689,5689

BRUNSWICK DIV. MERSMAN BROS. CORP.

MODEL 8109
Tuner Data

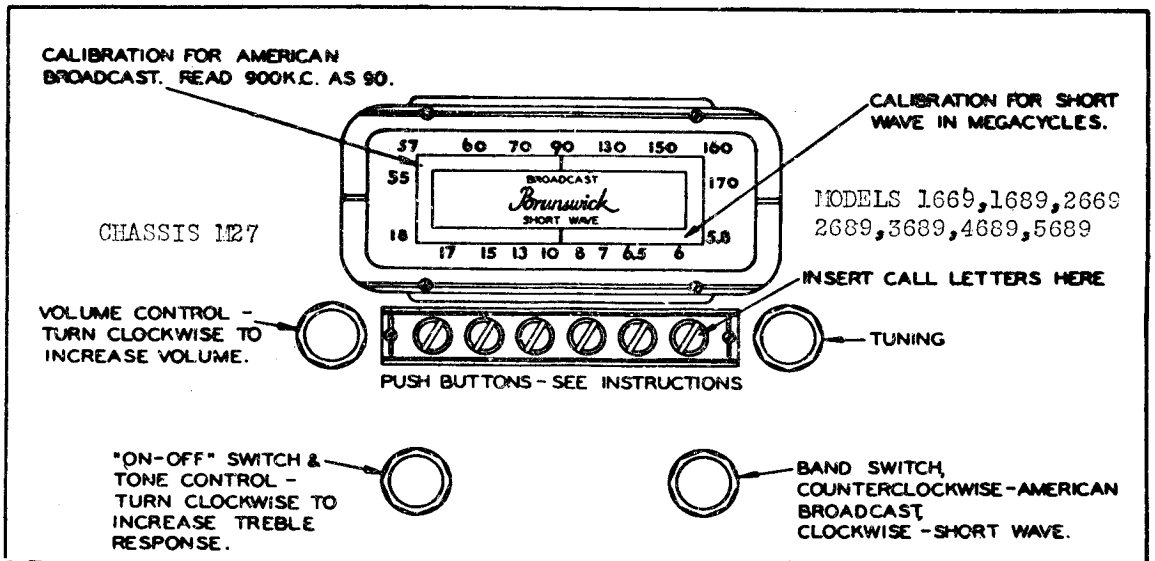

Push Button Set-up:

Any button may be set up for any station desired. First, tune in the station it is desired to set up on one of the buttons by means of the manual tuning control. Second, turn the push button counter-clockwise two full turns. Then depress this button the full length of its stroke, and while depressed, tighten the button again by turning it clockwise. The button may now be released. To check the correct setting for this button, turn the manual control to some other point and depress the push button. This will return the tuning mechanism to the station just set up. If it does not, repeat the foregoing sequence of operations more carefully. Each of the remaining buttons may be set to other stations in a like manner.

MODEL 8109
CHASSIS M31

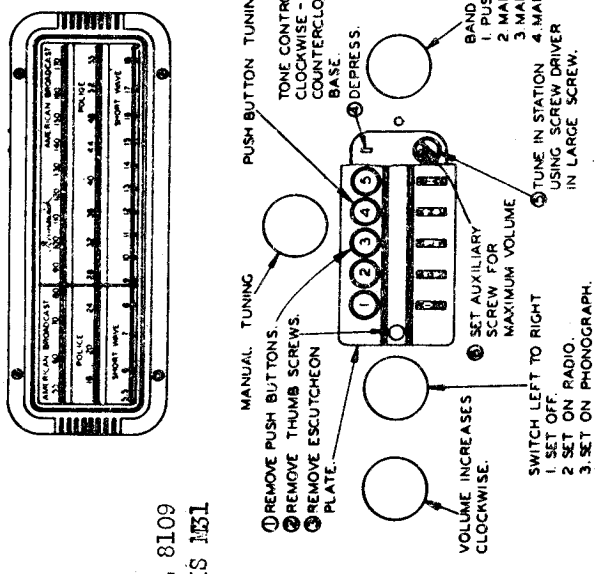

Push Button Set-up:

The overall frequency range covered by the push buttons on this Brunswick receiver is from 540 kc to 1,600 kc. This range is broken down into sections covered by each button (reading from left to right—see diagram) in the following manner:

Button No. 1	540 to 1000 kc
Button No. 2	550 to 1050 kc
Button No. 3	565 to 1050 kc
Button No. 4	725 to 1360 kc
Button No. 5	750 to 1440 kc
Button No. 6	1000 to 1600 kc

From the above, it will be apparent that all six buttons are adjustable to cleared channel stations, and also that the sixth or highest frequency button also embraces the extended broadcast spectrum to 1600 kc.

Make up a suitable list of six local stations, assigning one to each button within the ranges tabulated above. Follow the order of operation indicated by the circled figures 1 to 6 in the accompanying illustration. When operation 5 has been reached for each button, it will be found helpful to momentarily switch back to manual tuning and, thereby, identify the program to be tuned in on that particular button. Again, switch back to push button tuning on the band switch and proceed with operation 5 and 6. When the proper station has been heard, the final adjustment should be made while watching the tuning indicator. The shadow may seem to hold at a minimum angle for an appreciable time while making this adjustment. Turn the screw driver each side of what seems to be "center," until the shadow angle starts to become greater. Half the distance the screw driver has been turned is then the correct setting. Apply this procedure first to operation 5 and then 6.

In order to facilitate setting each button to the desired station, this receiver leaves the factory with the buttons set to the following frequencies:

Button No. 1	600 kc
Button No. 2	700 kc
Button No. 3	800 kc
Button No. 4	1000 kc
Button No. 5	1200 kc
Button No. 6	1400 kc

These frequencies should be used as reference points. If the desired station is on a higher frequency, turn the screw indicated as operation 5 in a counter-clockwise direction; if on a lower frequency, clockwise.

After the desired stations have been set up on the push buttons, replace the escutcheon and push buttons, then remove the proper station call letters from the call letter sheet and place them in the correct order in the windows below each button. Care should be taken that the call letters are inserted in the proper order and that they are right side up.

©John F. Rider, Publisher

MODELS 1425470,1425471

CADILLAC MOTOR CAR CO. Schematic

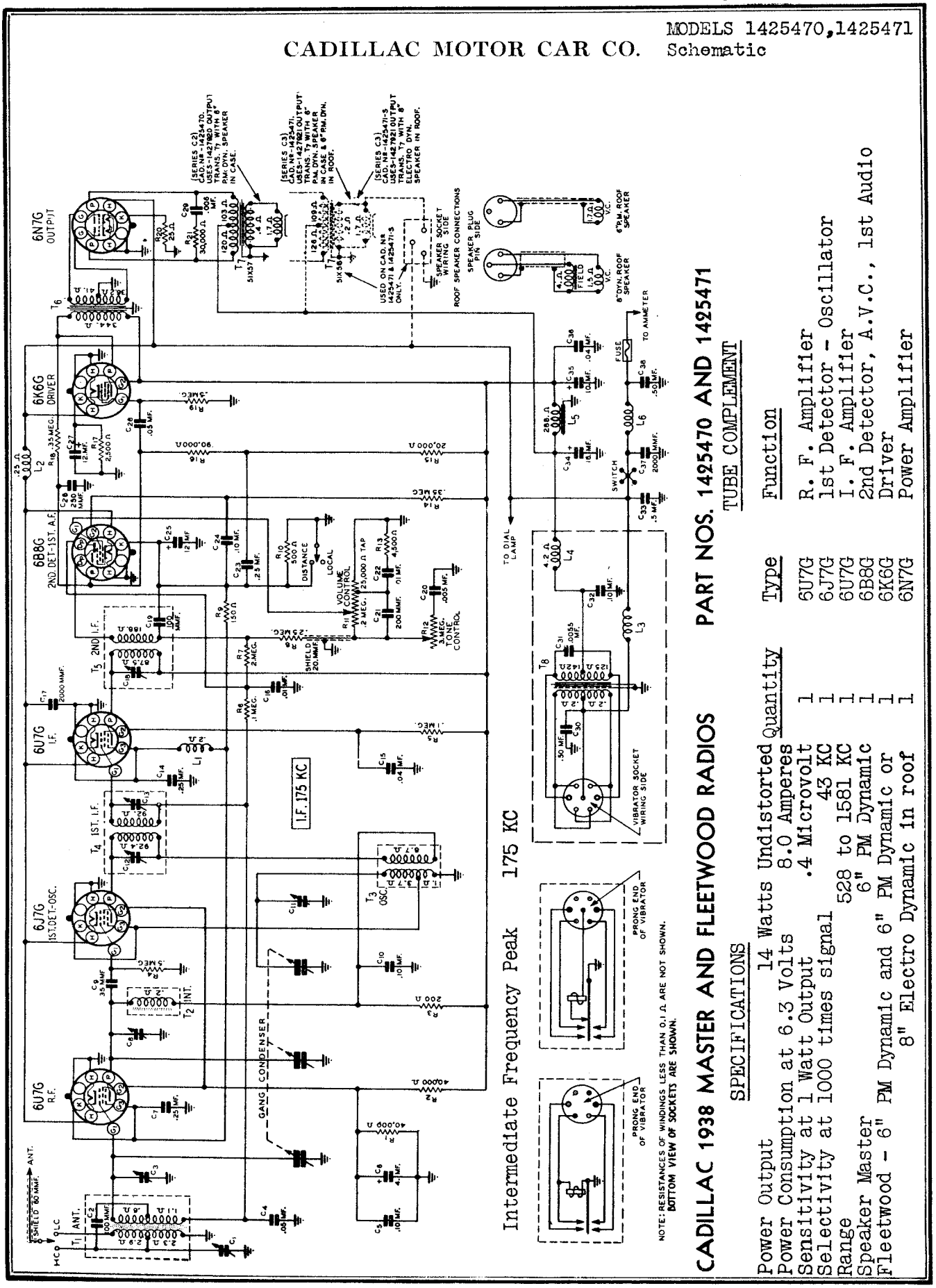

Intermediate Frequency Peak 175 KC

NOTE: RESISTANCES OF WINDINGS LESS THAN 0.1 Ω ARE NOT SHOWN.
BOTTOM VIEW OF SOCKETS ARE SHOWN.

CADILLAC 1938 MASTER AND FLEETWOOD RADIOS PART NOS. 1425470 AND 1425471

SPECIFICATIONS

Power Output	14 Watts Undistorted
Power Consumption at 6.3 Volts	8.0 Amperes
Sensitivity at 1 Watt Output	.4 Microvolt
Selectivity at 1000 times signal	43 KC
Range	528 to 1581 KC
Speaker Master	6" PM Dynamic
Fleetwood - 6" PM Dynamic and 6" PM Dynamic or 8" Electro Dynamic in roof	

TUBE COMPLEMENT

Quantity	Type	Function
1	6U7G	R. F. Amplifier
1	6J7G	1st Detector - Oscillator
1	6U7G	I. F. Amplifier
1	6B8G	2nd Detector, A.V.C., 1st Audio
1	6K6G	Driver
1	6N7G	Power Amplifier

©John F. Rider, Publisher

MODELS 1425470,1425471
Socket,Trimmers,Layout
Voltage,Alignment

CADILLAC MOTOR CAR CO.

ALIGNMENT AND CALIBRATION PROCEDURE

The following equipment is required for aligning:

A signal generator which will provide an accurately calibrated signal at the test frequencies as listed.

Output indicating meter.

Non-metallic screwdriver.

Dummy antennas - .05 mf., and 200 mmf.

Controls should be in the following positions:

Volume Control - Maximum all adjustments.

Local-Distance Switch - Distance position - all adjustments.

Connect radio chassis to ground lead of signal generator with a short heavy lead. The chassis should be in the case.

Allow chassis and signal generator to "heat up" for several minutes.

Attenuate the signal from the signal generator to prevent the levelling off action of the AVC.

After the alignment is completed, repeat the procedure as a final check

I. F. ADJUSTMENT

Set the signal generator for a signal of 175 KC.

Connect the output of the signal generator through an .05 mf. condenser to the stator of the first detector section of the tuning condenser.

Then adjust the I.F. trimmers until maximum output is obtained. The location of these trimmers is shown in parts layout illustration, Fig. 1.

1581 KILOCYCLE ADJUSTMENT

Set the signal generator for 1581 KC.

Turn the rotor of the tuning condenser to the full open position.

Insert the antenna plug for a high capacity antenna (mark on HC side). Connect the shielded antenna lead from the chassis through a 200 mmf. condenser to the antenna post of the signal generator.

Turn the tuning condenser to full open position, then adjust the trimmer of the oscillator section of the three gang condenser until maximum output is obtained - See Fig. 1 for location of this trimmer.

1400 KILOCYCLE ADJUSTMENT

Set the signal generator for 1400 KC.

Turn the rotor of the tuning condenser carefully until maximum output is obtained.

Adjust the 1st detector and R. F. trimmers on the tuning condenser for maximum output.

Do not change the setting of the oscillator trimmer.

600 KILOCYCLE ADJUSTMENT

Set the signal generator for 600 KC.

Turn the tuning condenser rotor until maximum output is obtained.

Adjust the antenna 600 KC trimmer to maximum. This trimmer is reached from the outside of the case.

ADJUSTING ANTENNA 600 KILOCYCLE TRIMMER

After the radio is installed and the car antenna is connected, it will be necessary to readjust the antenna 600 KC trimmer.

Tune in a weak signal at approximately 600 KC with the volume control about three-fourths on. Turn the adjusting screw of the antenna 600 KC trimmer up or down until maximum output is obtained.

CALIBRATING THE RADIO

Tune in a signal of known frequency at about the center of the dial.

Choose a station with a frequency which corresponds to one of the numbers on the dial drum. For example, WLW, with a frequency of 700 KC, corresponds to 70 on the dial.

Holding the tuning knob. Using a clean eraser on the end of a lead pencil, turn the dial drum until the frequency of the station tuned in is at the center of the dial opening.

FIG. 1 PARTS LAYOUT, TOP VIEW

FIG. 2 PARTS LAYOUT, BOTTOM VIEW

©John F. Rider, Publisher

CADILLAC MOTOR CAR CO.

MODEL 7232502
Schematic

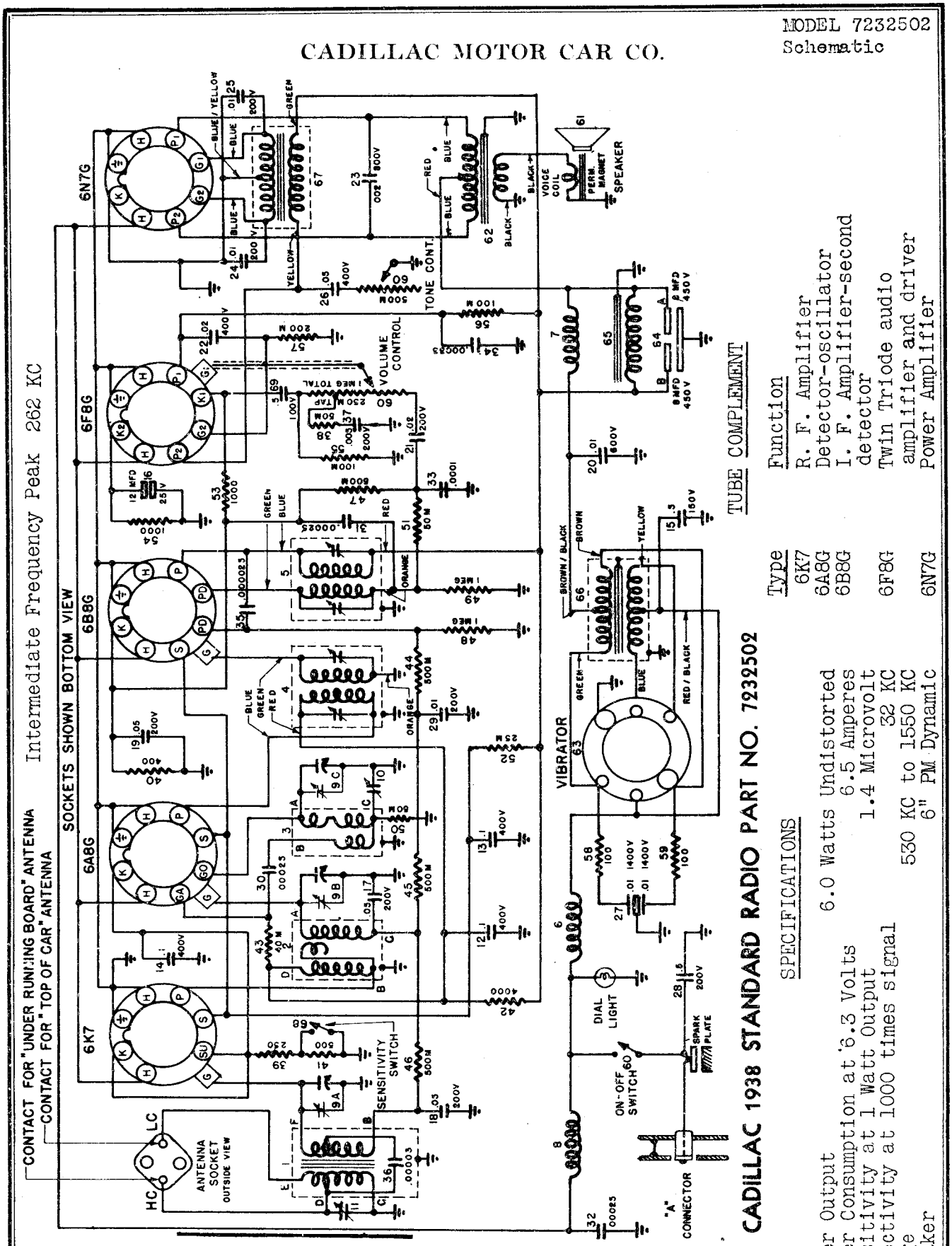

Type	Function
6K7	R. F. Amplifier
6A8G	Detector-oscillator
6B8G	I. F. Amplifier-second detector
6F8G	Twin Triode audio amplifier and driver
6N7G	Power Amplifier

FIG. 3 SCHEMATIC CIRCUIT DIAGRAM
CADILLAC 1938 STANDARD RADIO

©John F. Rider, Publisher

MODEL 7232502
Socket, Trimmers, Layout CADILLAC MOTOR CAR CO.
Voltage, Alignment

VOLTAGE CHART
BOTTOM VIEW OF TUBE SOCKETS

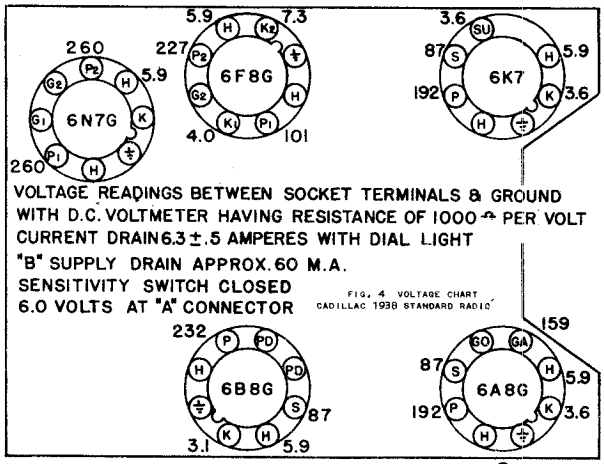

VOLTAGE READINGS BETWEEN SOCKET TERMINALS & GROUND
WITH D.C. VOLTMETER HAVING RESISTANCE OF 1000 Ω PER VOLT
CURRENT DRAIN 6.3 ± .5 AMPERES WITH DIAL LIGHT
"B" SUPPLY DRAIN APPROX. 60 M.A.
SENSITIVITY SWITCH CLOSED
6.0 VOLTS AT "A" CONNECTOR

FIG. 4 VOLTAGE CHART CADILLAC 1938 STANDARD RADIO

GENERAL SERVICE DATA

Inserting Antenna Plug:

IMPORTANT -- The antenna plug can be inserted in two ways depending on whether the antenna is of high or low capacity.

Referring to Fig. 3, it will be noted that the letters HC and LC are stamped on the case. There is a spot of paint on the antenna plug. When the plug is inserted with the spot of paint on the HC side, it is properly inserted for a high capacity antenna and when it is inserted with the spot of paint on the LC side, it is properly inserted for a low capacity antenna.

If the total capacity of the antenna and shielded lead is approximately 200 mmf., which would be the case in a running board or ordinary roof antenna (not metal roof), insert the antenna plug for a high capacity antenna or with the mark on the HC side.

If the total capacity of the antenna and shielded lead is approximately 70 mmf., such as may be the case if a "roof" antenna is used, insert the antenna plug for a low capacity antenna or with the mark on the LC side.

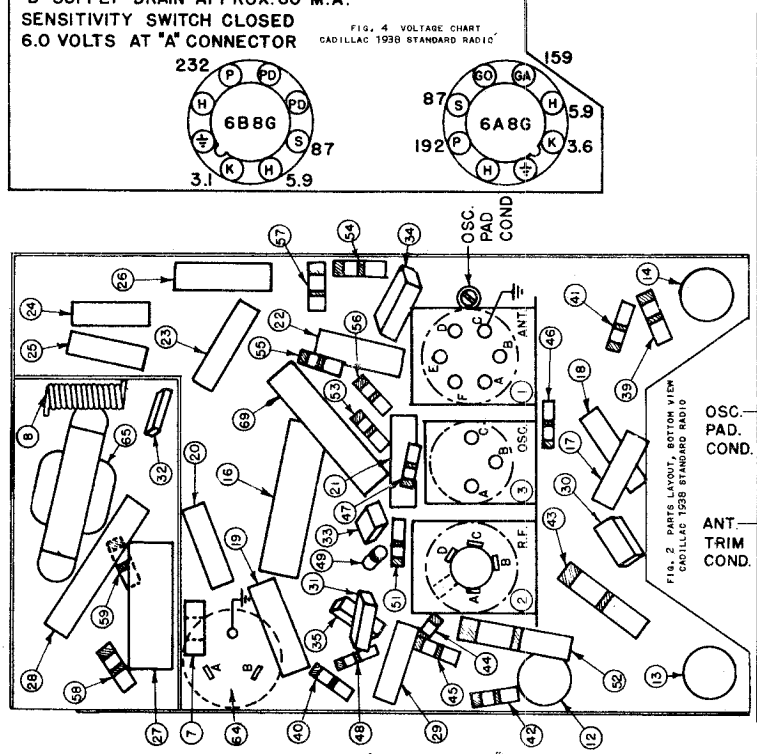

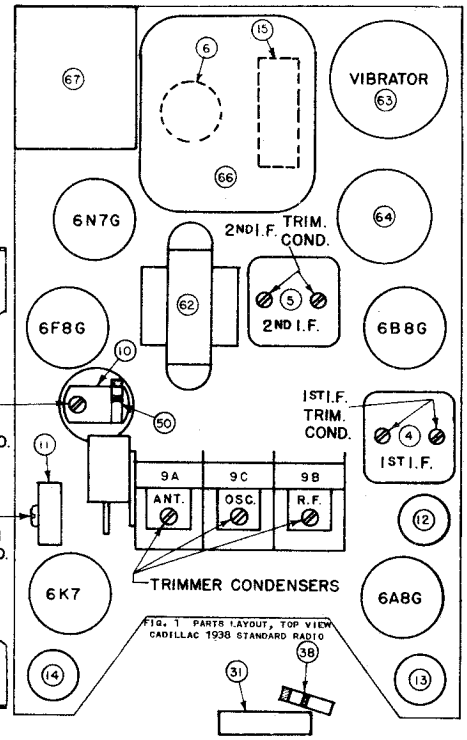

ALIGNMENT AND CALIBRATION PROCEDURE

The following equipment is required for aligning:

A signal generator which will provide an accurately calibrated signal at the best frequencies as listed.

Output indicating meter.

Non-metallic screwdriver.

Dummy antennas - .05 mf., and 200 mmf.

Controls should be in the following positions:

Volume Control - Maximum all adjustments.

Local-Distance Switch - Distance position - all adjustments.

Connect radio chassis to ground lead of signal generator with a short heavy lead. The chassis should be in the case.

Allow chassis and signal generator to "heat up" for several minutes.

Attenuate the signal from the signal generator to prevent the levelling off action of the A.V.C.

After the alignment is completed, repeat the procedure as a final check.

CONNECTING THE OUTPUT METER

Connect the terminals of the output meter to the plate prongs of the 6N7G tube. In order to protect the output meter from D. C. voltage, a condenser (.25 mfd., 400 volt) should be connected in series with one terminal.

I. F. ADJUSTMENT

Connect the signal lead of the test oscillator to the grid cap of the 6A8G transistor tube through a .05 mfd. condenser, leaving the tube's grid clip in place. Connect the ground lead of the test oscillator to the chassis frame.

Set the test oscillator to exactly 262 KC.

Turn rotor plates of gang condenser completely out of mesh. Adjust the trimmers on the I. F. coils Nos. 4 and 5, for maximum output. (See Fig. 1). Adjustment of these four trimmers should be repeated several times and during alignment, the oscillator output should be kept to as low a value as is consistent with obtaining a readable indication on the output meter.

1400 KILOCYCLE ADJUSTMENT

Remove the signal lead of the test oscillator from the grid of the translator (6A8G) tube and connect to the antenna terminal of the receiver through a 200 mmfd. condenser.

Set the test oscillator to exactly 1400 kilocycles.

Tune the set to 1400 kilocycles (use an indicator in front of the dial, corresponding to the pointer in the instrument panel dial opening.)

Adjust the parallel trimmers of the antenna, oscillator and R. F. sections of the gang condenser, (9A, 9C and 9B, Fig. 1) for maximum output.

600 KILOCYCLE ADJUSTMENT

Remove the signal lead of the test oscillator from the antenna terminal and connect to the grid cap of the 6K7, (R. F.) tube through the 200 mmfd. condenser. Leave the tube's grid clip in place.

Set the test oscillator on 600 KC.

Tune the set to 600 KC. Maintain a low output signal and adjust the oscillator padder condenser No. 10 (Fig. 1) while rocking the variable condenser gang tuning shaft back and forth through the signal. This operation should be continued until no further increase in output can be obtained. An insulated screw driver should be used for this adjustment.

Remove signal lead of the test oscillator from the 6K7 tube cap and connect to the antenna terminal.

With test oscillator and set both adjusted to 600 KC., adjust the antenna trimmer condenser, No. 11 (Fig. 1) for maximum output.

ADJUSTING ANTENNA TRIMMER

After the set is installed in a car and the antenna is connected, the antenna trimmer should again be adjusted. Tune in a weak signal at approximately 600 KC and turn volume full on. If the signal volume is too great the sensitivity control should be turned to the local position. Adjust the antenna trimmer, No. 11, (Fig. 1) for maximum signal output.

REALIGNING AT 1400 KILOCYCLES

Recheck alignment of R. F. antenna and oscillator sections of gang condenser as outlined in paragraph No. 3.

©John F. Rider, Publisher

CHAMPION RADIO

MODEL 30
MODELS 307,317
Schematics

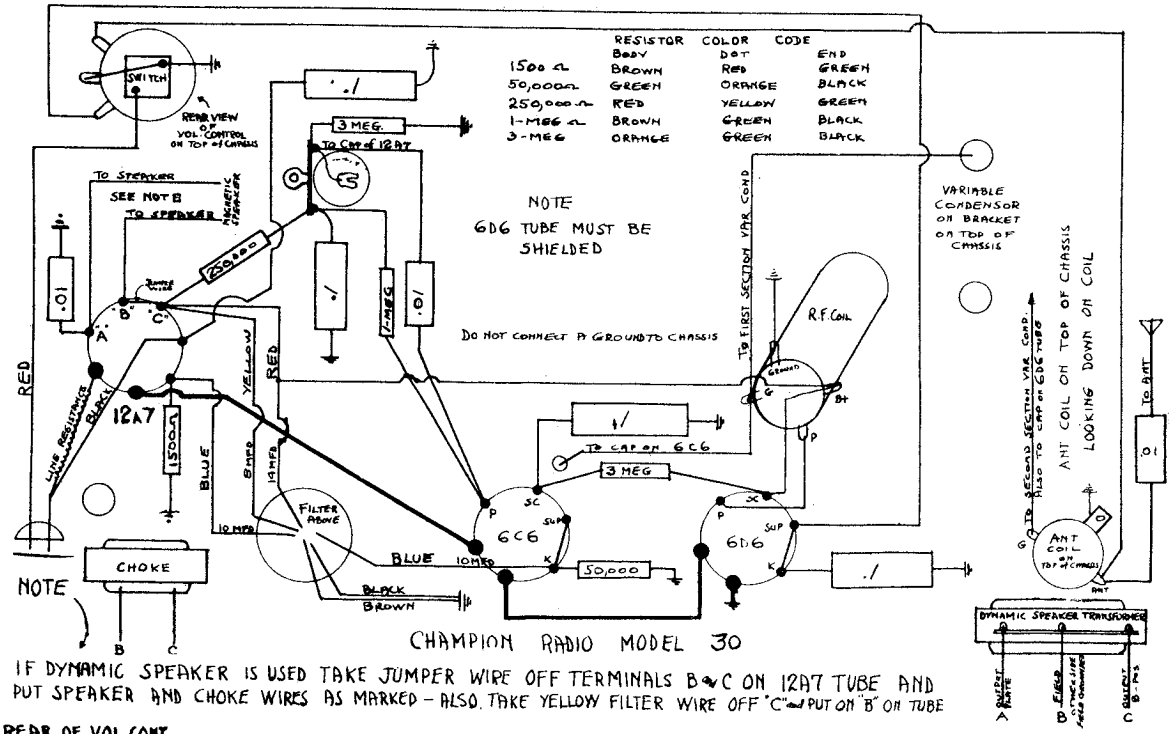

CHAMPION RADIO MODEL 30

IF DYNAMIC SPEAKER IS USED TAKE JUMPER WIRE OFF TERMINALS B & C ON 12A7 TUBE AND PUT SPEAKER AND CHOKE WIRES AS MARKED – ALSO. TAKE YELLOW FILTER WIRE OFF "C" and PUT ON "B" ON TUBE

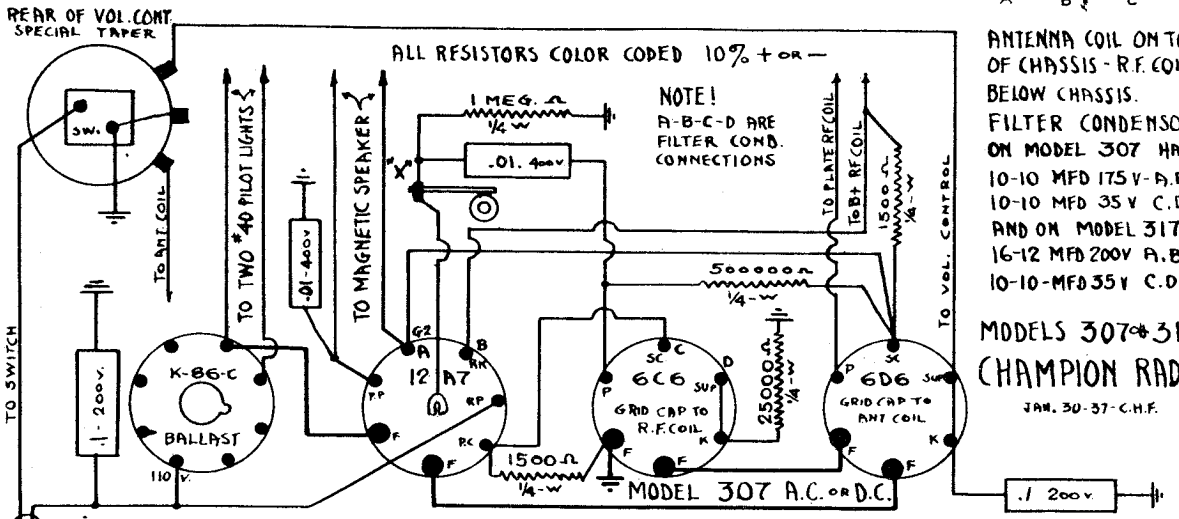

ANTENNA COIL ON TOP OF CHASSIS - R.F. COIL BELOW CHASSIS.
FILTER CONDENSOR ON MODEL 307 HAS
10-10 MFD 175 V - A.B.
10-10 MFD 35 V C.D
AND ON MODEL 317
16-12 MFD 200V A.B.
10-10-MFD 35 V C.D.

MODELS 307 & 317
CHAMPION RADIO
JAN. 30-37-C.H.F.

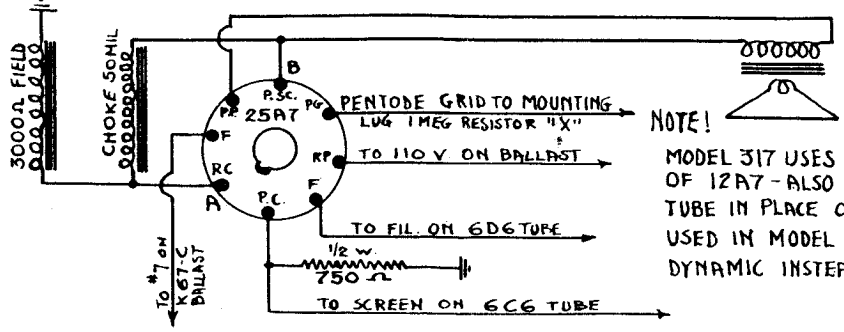

MODEL 317
A.C. OR D.C.

NOTE!
MODEL 317 USES 25A7 TUBE IN PLACE OF 12A7 - ALSO USES K-67-C BALLAST TUBE IN PLACE OF K-86-C BALLAST AS USED IN MODEL 307 - ALSO SPEAKER IS DYNAMIC INSTEAD OF MAGNETIC.

©John F. Rider, Publisher

MODELS 54,55
Schematic

CHAMPION RADIO

MODELS 1437,7373,8373
Coil Data

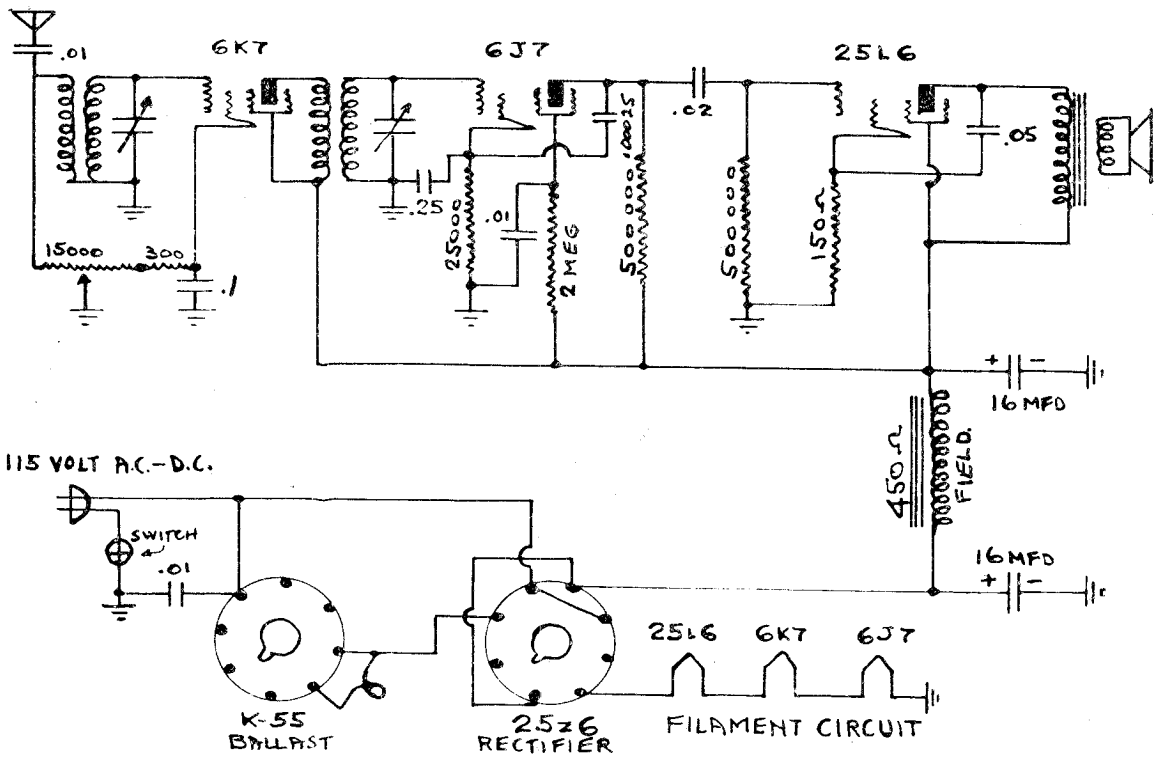

CHAMPION RADIO MODEL-55

MODEL 54 SIMILAR EXCEPT 25A6 USED IN PLACE OF 25L6 AND CATHODE RESISTOR OF 150Ω IS CHANGED TO 750Ω + BY-PASSED WITH 10 MFD. 25 VOLT CONDENSER

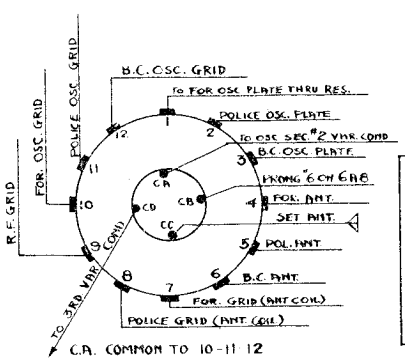

C.A. COMMON TO 10-11-12
C.B. COMMON TO 1-2-3
C.C. COMMON TO 4-5-6
C.D. COMMON TO 7-8-9

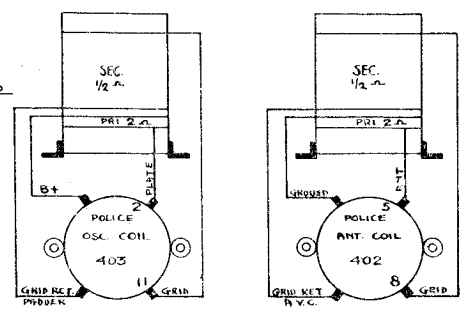

LOOKING DOWN FROM TOP OF COILS

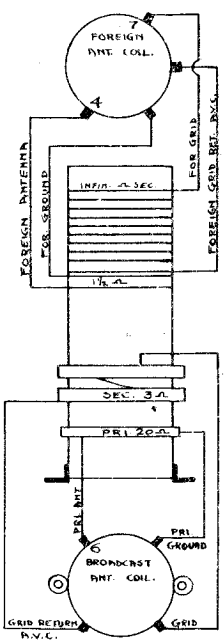

BROADCAST AND FOREIGN ANT COIL
LOOKING DOWN FROM TOP OF COIL

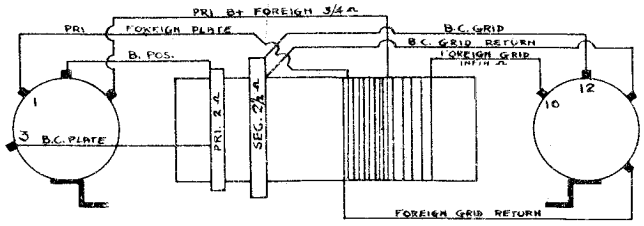

BROADCAST AND FOREIGN OSC. COIL.
FOR PRI. WOUND BETWEEN SEC.
TUNING CONDENSOR .00042 CAP.
INT. FREQUENCY 465 K.C.

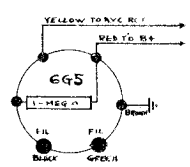

REAR OF MAGIC EYE SOCKET

COIL DETAILS ARE SAME FOR MODELS 862-E 1437 6320 6322-811 7373-AND 8373

SHEET # 2

COIL AND SWITCH DETAILS MODEL 1437

CHAMPION RADIO

©John F. Rider, Publisher

MODEL 400
Schematic

CHAMPION RADIO

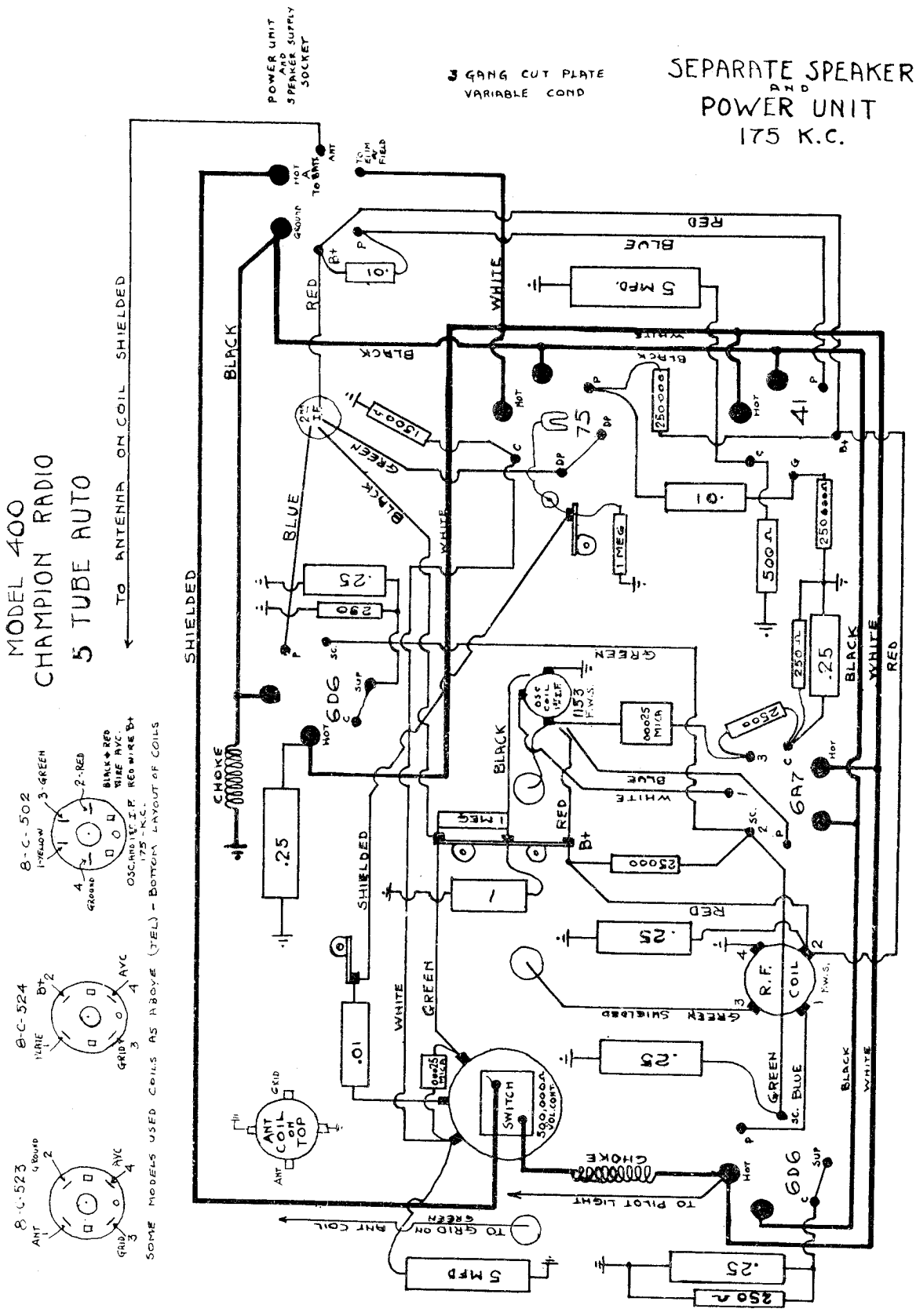

©John F. Rider, Publisher

MODEL 1437
Schematic

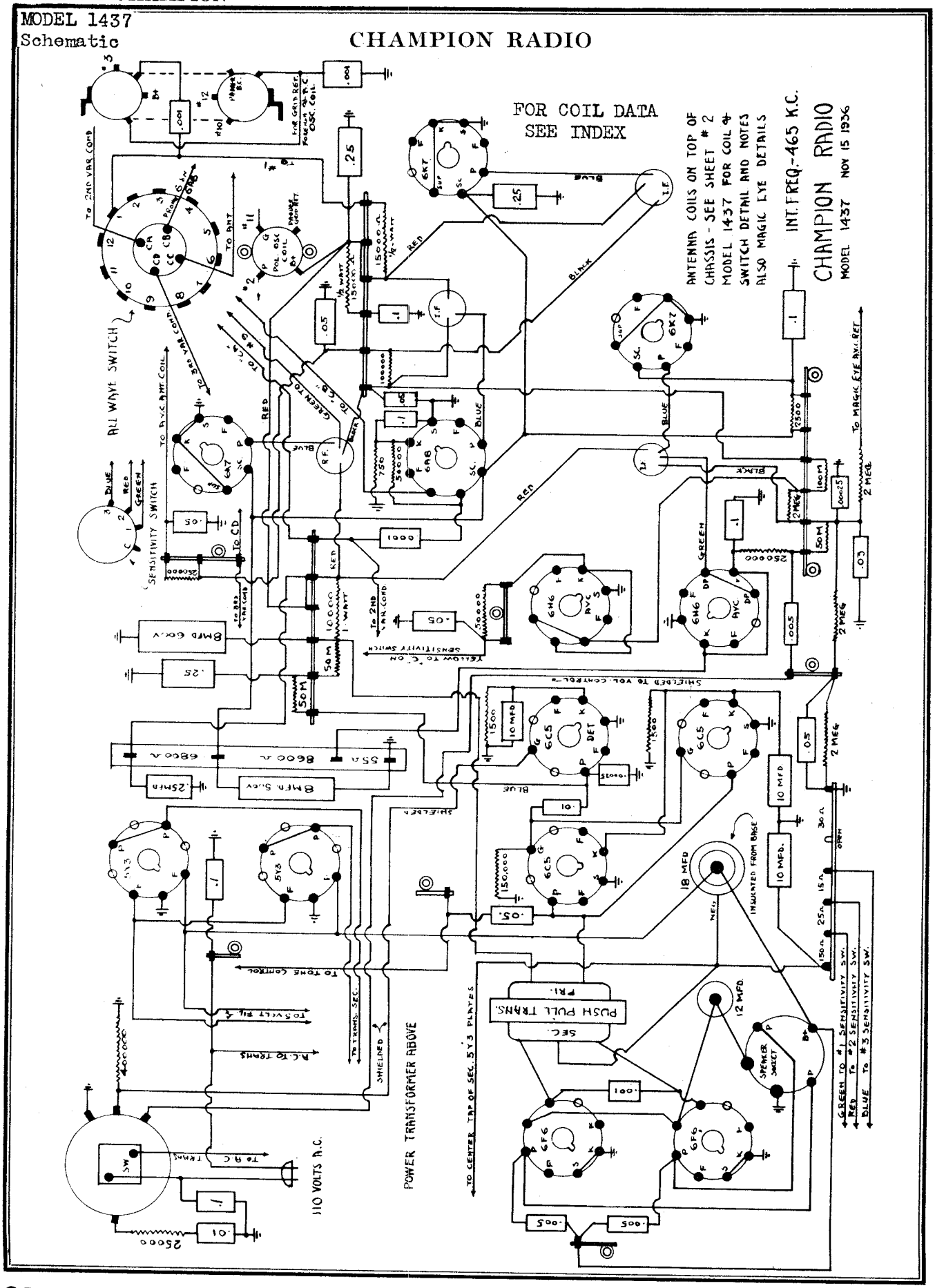

©John F. Rider, Publisher

CHAMPION RADIO

MODEL 6138P
MODEL 6238P
Schematics

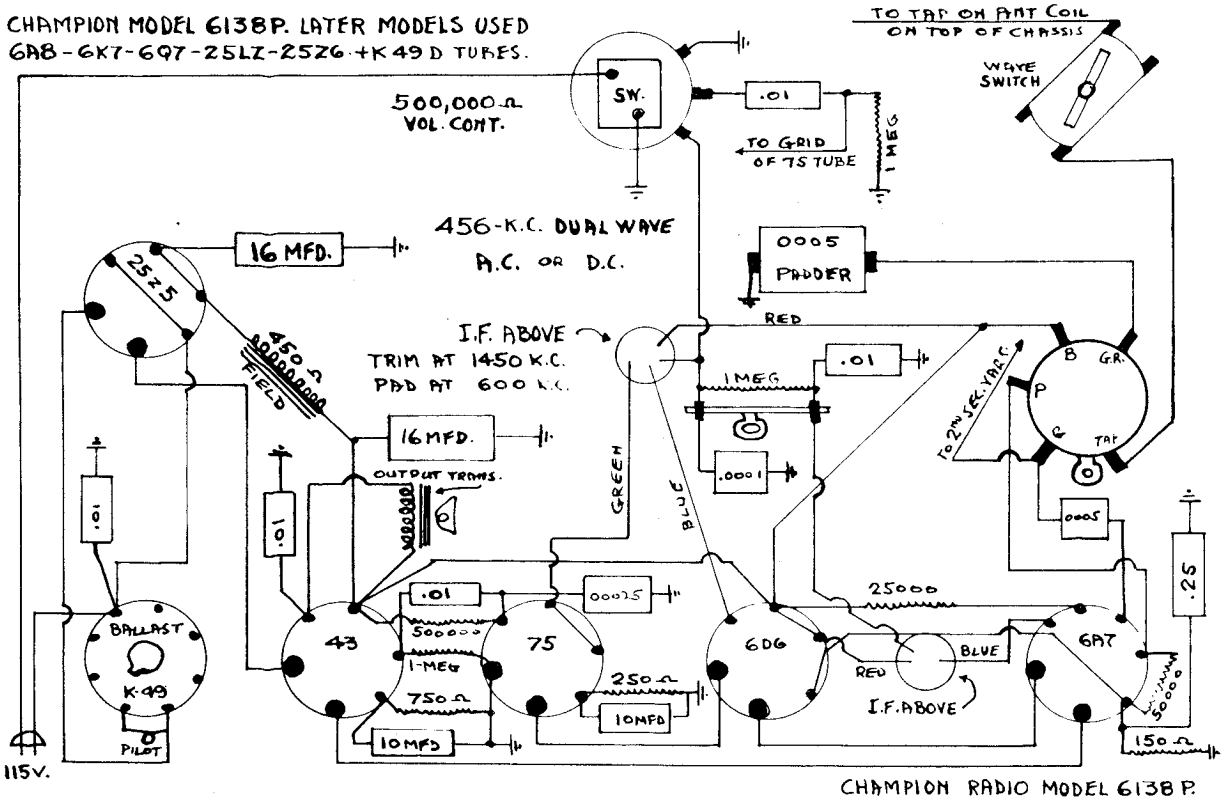

CHAMPION RADIO MODEL 6138P.

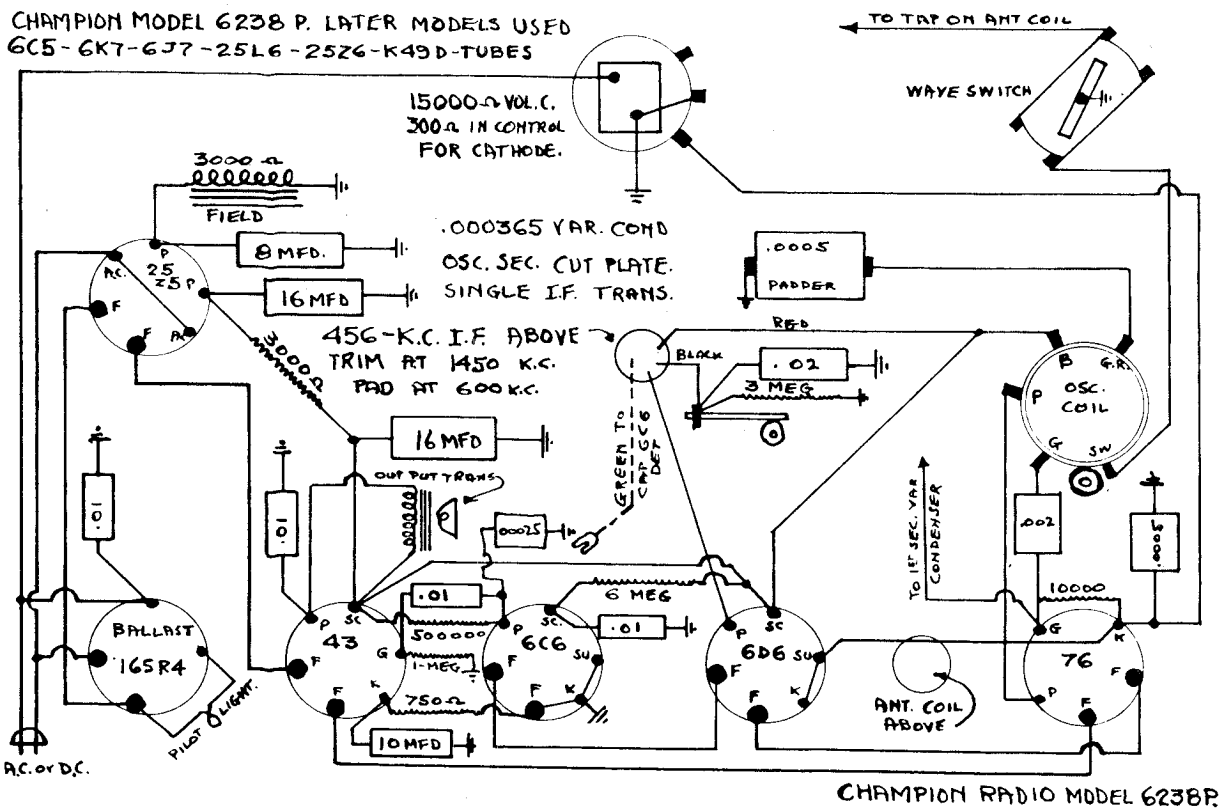

CHAMPION RADIO MODEL 6238P.

©John F. Rider, Publisher

MODELS 7373,8373
Schematic

CHAMPION RADIO

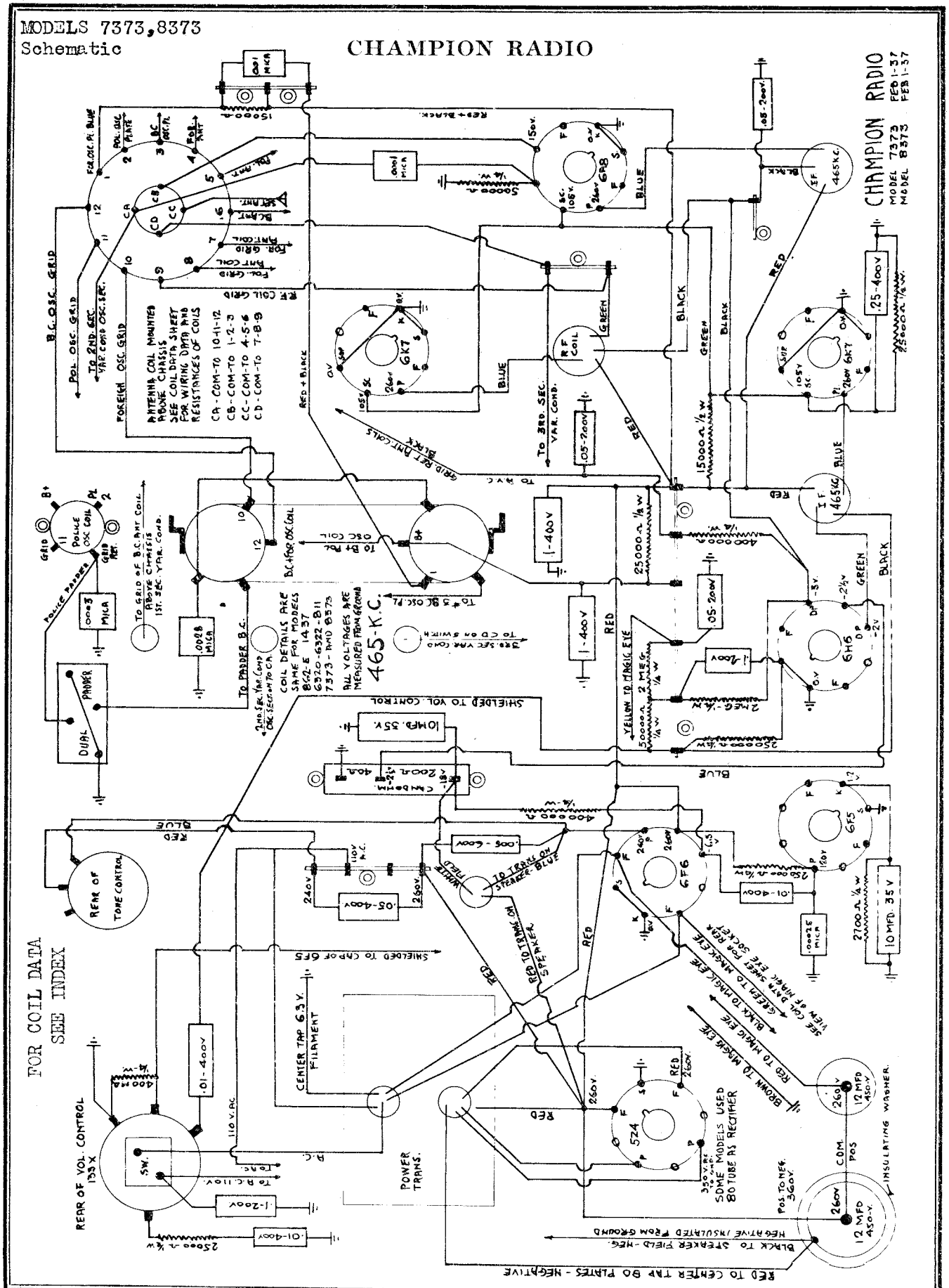

©John F. Rider, Publisher

MODEL ATE
MODEL E-02
Schematics, Socket Align.

CLIMAX RADIO & TELEV. CO., INC.

MODEL AL
MODEL ASE
Schematics, Socket Al.

MODEL ATE
9 TUBE 3 BAND AC-DC SUPERHETERODYNE RECEIVER

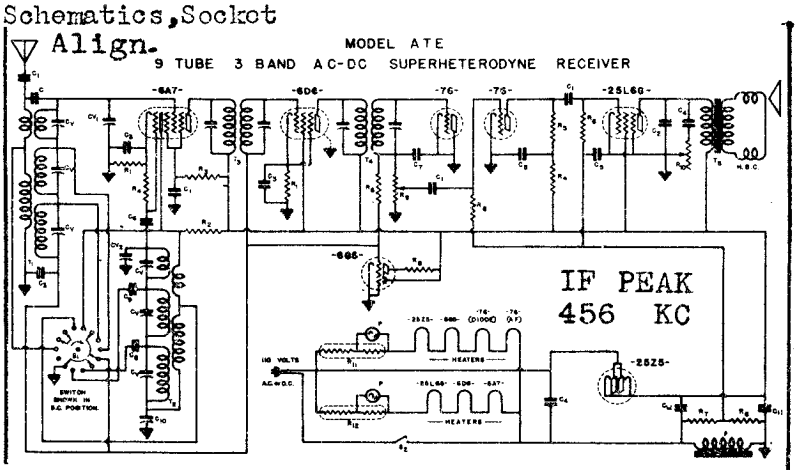

LEGEND	OUR PART NO.	DESCRIPTION
C_1	211	.01 MFD. 400 V. TUBULAR CONDENSER
C_2	216	.02 MFD. 400 V. TUBULAR CONDENSER
C_3	203	.1 MFD. 200 V. TUBULAR CONDENSER
C_4	210	.1 MFD. 400 V. TUBULAR CONDENSER
C_5	204	.25 MFD. 200 V. TUBULAR CONDENSER
C_6	400	.0001 MFD. MICA CONDENSER
C_7	401	.00025 MFD. MICA CONDENSER
C_8	410	.0015 MFD. MICA CONDENSER
C_9	408	.0045 MFD. MICA CONDENSER
C_{10}	507	B PLATE PADDING CONDENSER
C_{11}	314	10 MFD. 150 W.V. WET ELECTROLYTIC COND.
C_{12}	311	80 MFD. 150 W.V. WET ELECTROLYTIC COND.
CV_{1-2-3}	530	3 GANG VARIABLE CONDENSER
C_V	500	5-30 MMFD. TRIMMER CONDENSER
S_1	1915	BAND SELECTOR SWITCH
S_2	—	LINE SWITCH ON VOLUME CONTROL
F	TN 812	450 OHM SPEAKER FIELD
P	2501	MAZDA #44 PILOT LIGHTS

LEGEND	OUR PART NO.	DESCRIPTION
R_1	103	250 OHM ½ WATT CARBON RESISTOR
R_2	109	5000 OHM ½ WATT CARBON RESISTOR
R_3	109	10,000 OHM ½ WATT CARBON RESISTOR
R_4	113	50,000 OHM ½ WATT CARBON RESISTOR
R_5	115	100,000 OHM ½ WATT CARBON RESISTOR
R_6	116	250,000 OHM ½ WATT CARBON RESISTOR
R_7	117	500,000 OHM ½ WATT CARBON RESISTOR
R_8	119	1 MEGOHM ½ WATT CARBON RESISTOR
R_9	2006	500,000 OHM VOLUME CONTROL
R_{10}	2021	TONE CONTROL
R_{11}	2925	L-73-B BALLAST TUBE
R_{12}	2923	L-00-B BALLAST TUBE
T_1	1233	ANTENNA COIL
T_2	1418	OSCILLATOR COIL
T_3	1503	1ST I.F. TRANSFORMER
T_4	1507	2ND I.F. TRANSFORMER
T_5	TN 817	SPEAKER TRANSFORMER
C	—	CONDENSER IN ANTENNA COIL

TUBE LOCATION & CHASSIS LAYOUT

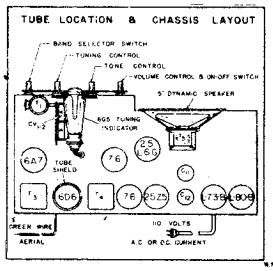

MODEL ASE
9 TUBE 3 BAND AC-DC SUPERHETERODYNE RECEIVER

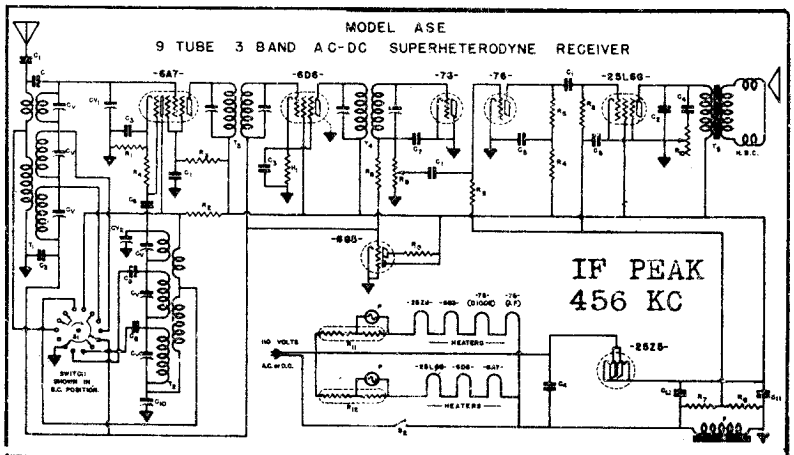

LEGEND	OUR PART NO.	DESCRIPTION
R_1	103	250 OHM ½ WATT CARBON RESISTOR
R_2	108	5000 OHM ½ WATT CARBON RESISTOR
R_3	109	10,000 OHM ½ WATT CARBON RESISTOR
R_4	113	50,000 OHM ½ WATT CARBON RESISTOR
R_5	115	100,000 OHM ½ WATT CARBON RESISTOR
R_6	116	250,000 OHM ½ WATT CARBON RESISTOR
R_7	117	500,000 OHM ½ WATT CARBON RESISTOR
R_8	119	1 MEGOHM ½ WATT CARBON RESISTOR
R_9	2006	500,000 OHM VOLUME CONTROL
R_{10}	2021	TONE CONT. VOL.
R_{11}	2925	L-73-B BALLAST TUBE
R_{12}	2923	L-00-B BALLAST TUBE
T_1	1233	ANTENNA COIL
T_2	1418	OSCILLATOR COIL
T_3	1503	1ST I.F. TRANSFORMER
T_4	1507	2ND I.F. TRANSFORMER
T_5	TN 817	SPEAKER TRANSFORMER
C	—	CONDENSER IN ANTENNA COIL

TUBE LOCATION & CHASSIS LAYOUT

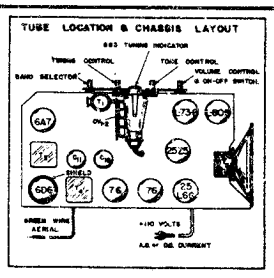

TUBE LOCATION & CHASSIS LAYOUT
MODEL AL

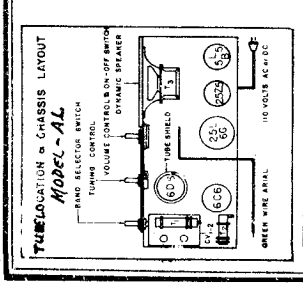

LEGEND	OUR PART NO.	DESCRIPTION
C_1	211	.01 MFD. 400 V. TUBULAR CONDENSER
C_2	216	.018 MFD. 400 V. TUBULAR CONDENSER
C_3	204	.05 MFD. 400 V. TUBULAR CONDENSER
C_4	219	.04 MFD. 200 V. TUBULAR CONDENSER
C_5	204	.25 MFD. 200 V. TUBULAR CONDENSER
C_6	401	.00025 MICA CONDENSER
C_7	314	10 MFD. DRY ELECTROLYTIC CONDENSER
C_8	324	25 MFD. DRY ELECTROLYTIC CONDENSER
P	2501	MAZDA #44 PILOT LAMP
CV_{1-2}	528	2 GANG VARIABLE CONDENSER
C_V	—	5-30 MMFD. COMPENSATORS
T_1	1227	B.C. & S.W. ANTENNA COIL
T_2	1218	B.C. & S.W. INTERSTAGE COIL
T_3	TN 814	SPEAKER OUTPUT TRANSFORMER
R_1	10048	10,000 OHM VOLUME CONTROL
R_2	—	450 OHMS, Minimum on Volume Control
R_3	101	1000 OHM ½ WATT CARBON RESISTOR
R_4	112	25,000 OHM ½ WATT CARBON RESISTOR
R_5	115	100,000 OHM ½ WATT CARBON RESISTOR
R_6	118	250,000 OHM ½ WATT CARBON RESISTOR
R_7	117	500,000 OHM ½ WATT CARBON RESISTOR
R_8	120	3 MEGOHM ½ WATT CARBON RESISTOR
T_4	2930	L-80-B BALLAST TUBE
S_1	TN 818	SPEAKER FIELD, 400 OHMS
S_2	1919	BAND SELECTOR SWITCH
L	—	LINE SWITCH ON VOLUME CONTROL
—	814	8" DYNAMIC SPEAKER

5 TUBE 2 BAND AC-DC OPERATED RECEIVER
MODEL E-02

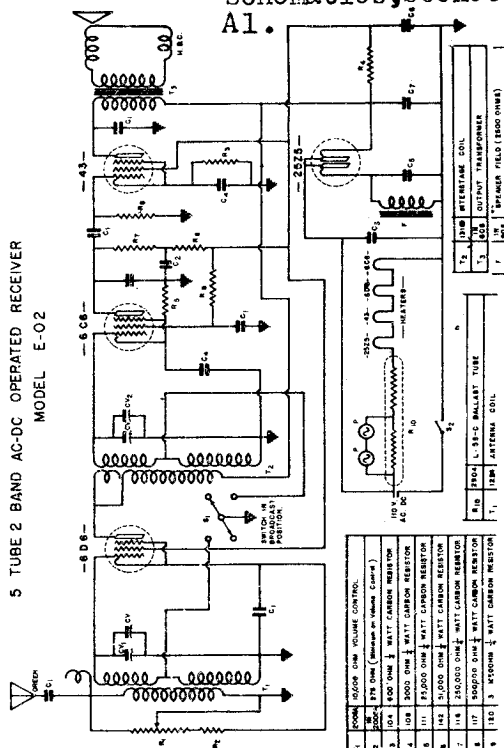

LEGEND	OUR PART NO.	DESCRIPTION
R_1	2006	25,000 OHM VOLUME CONTROL
R_2	2007	275 OHM (Minimum on Volume Control)
R_3	104	500 OHM ½ WATT CARBON RESISTOR
R_4	108	5000 OHM ½ WATT CARBON RESISTOR
R_5	111	25,000 OHM ½ WATT CARBON RESISTOR
R_6	112	50,000 OHM ½ WATT CARBON RESISTOR
R_7	116	250,000 OHM ½ WATT CARBON RESISTOR
R_8	117	500,000 OHM ½ WATT CARBON RESISTOR
R_9	120	1 MEGOHM ½ WATT CARBON RESISTOR

LEGEND	OUR PART NO.	DESCRIPTION
C_1	211	.01 MFD. 400 V. TUBULAR CONDENSER
C_2	216	.018 MFD. 400 V. TUBULAR CONDENSER
C_3	210	.1 MFD. 400 V. TUBULAR CONDENSER
C_4	318	5 MFD. 35 V. ELECTROLYTIC COND.
C_5	318	4 MFD. 200 V. ELECTROLYTIC COND.
C_6	318	8 MFD. 200 V. ELECTROLYTIC COND.
C_7	318	14 MFD. 200 V. ELECTROLYTIC COND.
S_1	1918	BAND SWITCH
CV_{1-2}	619	2 GANG VARIABLE CONDENSER
S_2	TN 2006	SWITCH ON VOLUME CONTROL
P	2501	MAZDA #44 PILOT LIGHTS

TUBE LOCATION & CHASSIS LAYOUT
MODEL E-02

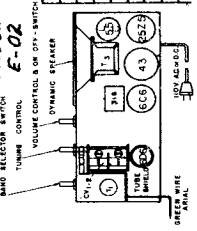

MODEL AL
5 TUBE TRF AC-DC RECEIVER

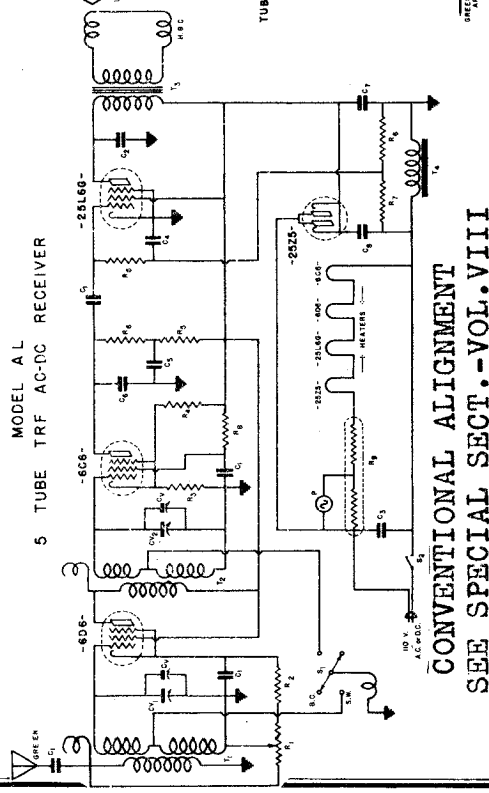

CONVENTIONAL ALIGNMENT
SEE SPECIAL SECT.-VOL. VIII

©John F. Rider, Publisher

MODEL AD6
MODEL AR
MODEL U, UE

CLIMAX RADIO & TELEV. CO., INC.

Schematics, Socket Alignment

MODEL AR

4 TUBE BROADCAST BED-LAMP RECEIVER = *AC-DC OPERATED*

PATENT APPLIED FOR

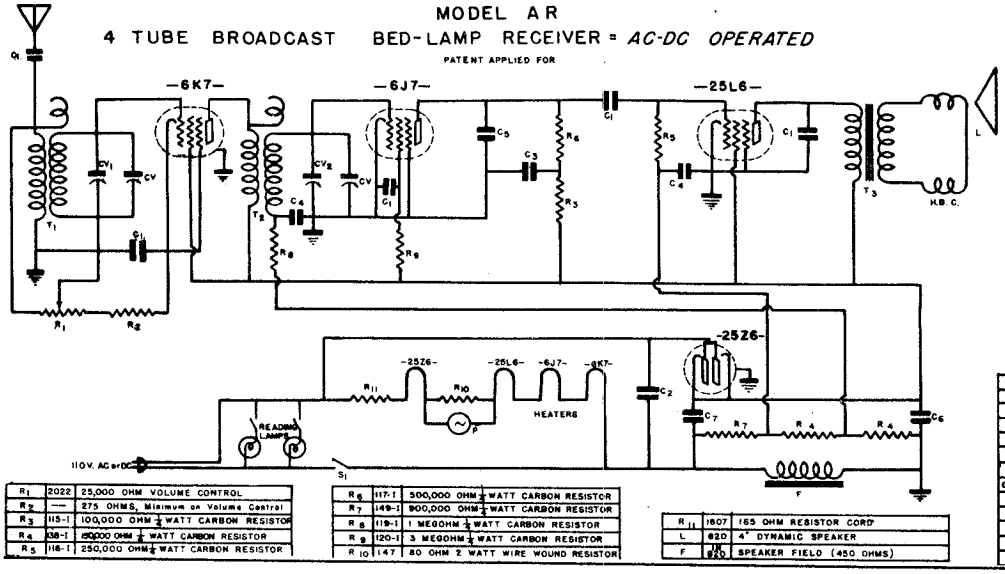

TUBE LOCATION & CHASSIS LAYOUT

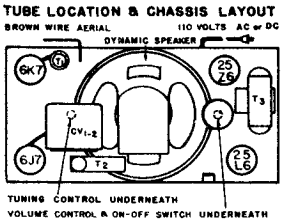

C_1	211	.01 MFD 400 V. TUBULAR CONDENSER
C_2	206	.05 MFD 400 V. TUBULAR CONDENSER
C_3	203	.1 MFD 200 V. TUBULAR CONDENSER
C_4	223	.25 MFD. 200 V. TUBULAR CONDENSER
C_5	401	.00025 MICA CONDENSER
C_6	312	10 MFD DRY ELECTROLYTIC CONDENSER
C_7	324	20 MFD DRY ELECTROLYTIC CONDENSER
CV_{1-2}	629	2 GANG VARIABLE CONDENSER
T_1	1213	ANTENNA COIL
T_2	1312	INTERSTAGE COIL
T_3	1020	OUTPUT TRANSFORMER
P	2921	NO.44 PILOT LIGHT
S_1	---	LINE SWITCH ON VOLUME CONTROL

R_1	2022	25,000 OHM VOLUME CONTROL
R_2	---	275 OHMS, Minimum on Volume Control
R_3	115-1	100,000 OHM ½ WATT CARBON RESISTOR
R_4	138-1	150000 OHM ½ WATT CARBON RESISTOR
R_5	118-1	250,000 OHM ½ WATT CARBON RESISTOR

R_6	117-1	500,000 OHM ½ WATT CARBON RESISTOR
R_7	149-1	900,000 OHM ½ WATT CARBON RESISTOR
R_8	119-1	1 MEGOHM ½ WATT CARBON RESISTOR
R_9	120-1	3 MEGOHM ½ WATT CARBON RESISTOR
R_{10}	147	80 OHM 2 WATT WIRE WOUND RESISTOR

R_{11}	1807	165 OHM RESISTOR CORD
L	620	4" DYNAMIC SPEAKER
F	620	SPEAKER FIELD (450 OHMS)

MODEL AD6

6 TUBE SKIP BAND SUPERHETERODYNE RECEIVER = *AC OPERATED*

CONVENTIONAL ALIGNMENT
SEE SPECIAL SECT.-VOL. VIII

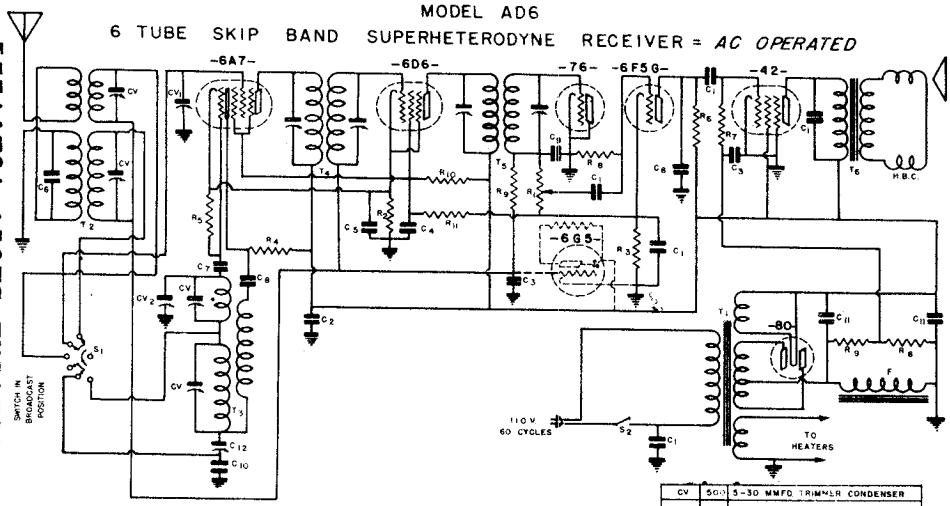

TUBE LOCATION & CHASSIS LAYOUT

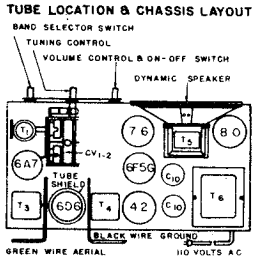

IF PEAK 456 KC

C_1	211	.01 MFD 400V. TUBULAR CONDENSER
C_2	206	.05 MFD 600V. TUBULAR CONDENSER
C_3	203	.1 MFD 200 V. TUBULAR CONDENSER
C_4	210	.1 MFD 400 V. TUBULAR CONDENSER
C_5	204	.25 MFD 200 V. TUBULAR CONDENSER
C_6	412	.00005 MFD MICA CONDENSER

C_7	400	.0001 MFD MICA CONDENSER
C_8	401	.00025 MFD MICA CONDENSER
C_9	402	.0005 MFD MICA CONDENSER
C_{10}	410	.0018 MFD MICA CONDENSER
C_{11}	317	8 MFD 450 W.V. WET ELECTROLYTIC
C_{12}	507	5 PLATE PADDING CONDENSER

CV	500	5-30 MMFD TRIMMER CONDENSER
CV_{1-2}	612-A	2 GANG VARIABLE CONDENSER
F	620	SPEAKER FIELD (1600 OHMS)
S_1	1920	BAND SELECTOR SWITCH
P	2921	MAZDA NO 44 PILOT LIGHT
R_1	2009	500,000 OHM VOLUME CONTROL
R_2	103	250 OHM ½ WATT CARBON RESISTOR
R_4	139	400 OHM ½ WATT CARBON RESISTOR

R_4	109	10,000 OHM ½ WATT CARBON RESISTOR
R_5	111	25,000 OHM ½ WATT CARBON RESISTOR
R_6	116	250,000 OHM ½ WATT CARBON RESISTOR
R_7	145	400,000 OHM ½ WATT CARBON RESISTOR
R_8	117	500,000 OHM ½ WATT CARBON RESISTOR
R_9	119	1 MEGOHM ½ WATT CARBON RESISTOR
R_{10}	146	25,000 OHM 1 WATT CARBON RESISTOR
T_1	1001	POWER TRANSFORMER
T_2	1225	B.C. & SKIP BAND ANTENNA COIL
T_3	1412	B.C. & SKIP BAND OSCILLATOR COIL
T_4	1503	INPUT I.F. TRANSFORMER
T_5	1507	DIODE I.F. TRANSFORMER
T_6	1411	SPEAKER TRANSFORMER
R_{11}	113	50,000 OHM ½ WATT CARBON RESISTOR

MODELS U & UE

6 (or 7) TUBE TWO BAND AC-DC SUPERHETERODYNE RECEIVER

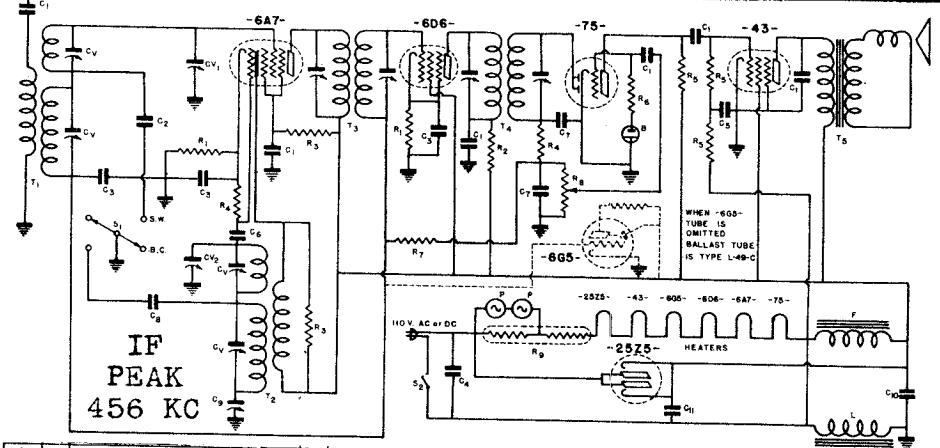

TUBE LOCATION & CHASSIS LAYOUT

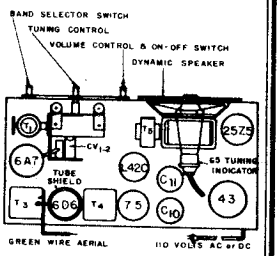

C_1	211	.01 MFD 400 V. TUBULAR CONDENSER
C_2	206	.05 MFD 200 V. TUBULAR CONDENSER
C_3	203	.1 MFD 200 V. TUBULAR CONDENSER
C_4	210	.1 MFD 400 V. TUBULAR CONDENSER
C_5	204	.25 MFD 200 V. TUBULAR CONDENSER
C_6	400	.0001 MICA CONDENSER
C_7	401	.00025 MICA CONDENSER
C_8	411	.00128 MICA CONDENSER
C_9	507	5 PLATE PADDING CONDENSER
C_{10}	314	10 MFD 150 W.V. WET ELECTROLYTIC COND.
C_{11}	311	20 MFD 150 W.V. WET ELECTROLYTIC COND
T_1	1210	ANTENNA COIL
T_2	1404	OSCILLATOR COIL
T_3	1507	OUTPUT I.F. TRANSFORMER
T_4	1503	INPUT I.F. TRANSFORMER
T_5	1411	SPEAKER TRANSFORMER
L	1100	FILTER CHOKE
CV_{1-2}	612-A	2 GANG VARIABLE CONDENSER
C_V	500	5-30 MFD TRIMMER CONDENSER
R_1	103	250 OHM ½ WATT CARBON RESISTOR

R_2	116	2000 OHM ½ WATT CARBON RESISTOR
R_3	111	25,000 OHM ½ WATT CARBON RESISTOR
R_4	113	50,000 OHM ½ WATT CARBON RESISTOR
R_5	116	250,000 OHM ½ WATT CARBON RESISTOR
R_6	117	500,000 OHM ½ WATT CARBON RESISTOR
R_7	119	1 MEGOHM ½ WATT CARBON RESISTOR
R_8	2009	500,000 OHM VOLUME CONTROL
R_9	2906	L-42-C BALLAST TUBE (with 6G5 tube)
R_9	2905	L-49-C BALLAST TUBE (without 6G5 tube)
S_1	1916	BAND SELECTOR SWITCH
S_2	---	LINE SWITCH ON VOLUME CONTROL
P	2902	MAZDA #46 PILOT LIGHT
B	3000	BIAS CELL
F	620	SPEAKER FIELD (2500 OHMS)

©John F. Rider, Publisher

CONTINENTAL RADIO & TELEV. CO.

MODEL 5A
Schematic, Socket
Trimmers, Alignment
Tuner, Parts

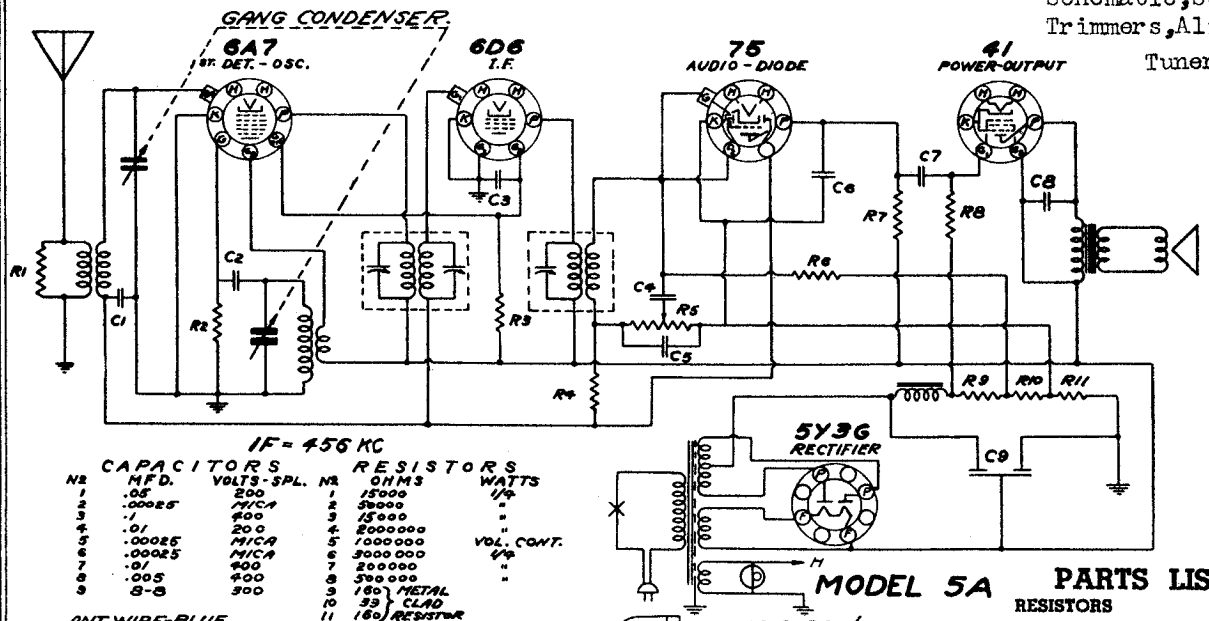

CAPACITORS			RESISTORS		
NO.	MFD.	VOLTS - SPL.	NO.	OHMS	WATTS
1	.05	200	1	15000	1/4
2	.00025	MICA	2	50000	"
3	.1	400	3	15000	"
4	.01	200	4	2000000	"
5	.00025	MICA	5	1000000	VOL. CONT.
6	.00025	MICA	6	3000000	1/4
7	.01	400	7	200000	"
8	.005	400	8	500000	"
9	8-8	300	9	180 } METAL	
			10	33 } CLAD	
			11	160 } RESISTOR	

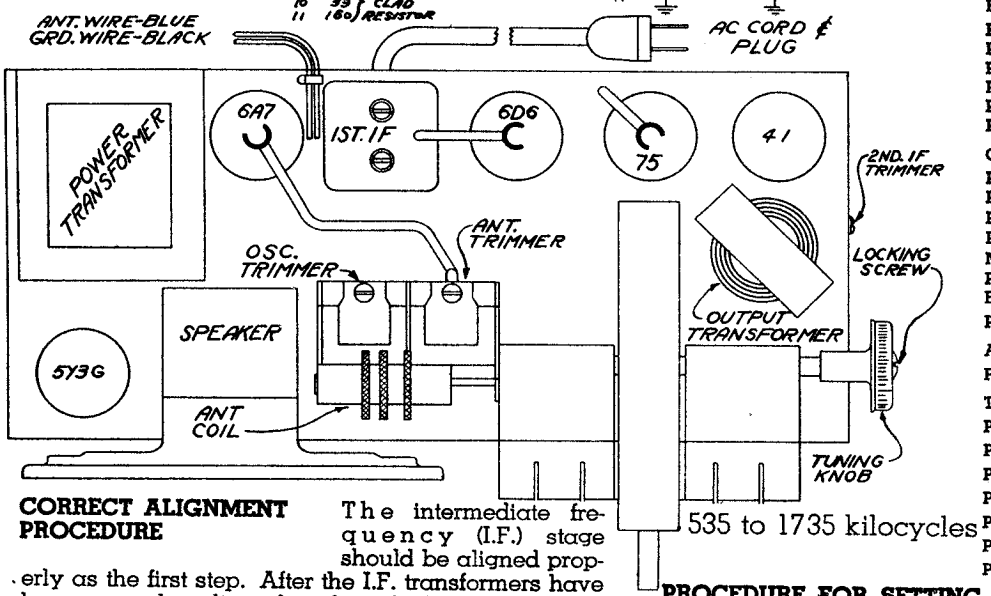

PARTS LIST

RESISTORS

P1220	200,000 Ohm ¼ Watt
P417	50,000 Ohm ¼ Watt
P258	15,000 Ohm ¼ Watt
P137	500,000 Ohm ¼ Watt
P1114	2,000,000 Ohm ¼ Watt
P2438	Candohm Resistor

CONDENSERS

P164	.01 Mfd. 400 Volt
P1322	.005 Mfd. 600 Volt
P334	.05 Mfd. 400 Volt
P148	.05 Mfd. 200 Volt

MICA CONDENSERS

P817	.00025

ELECTROLYTIC CONDENSERS

P2397	Dual 8 Mfd. 300 W.V.

ADJUSTABLE CONDENSERS

P2411	Gang Condenser

TRANSFORMERS AND COILS

P2395	110 V. Power Transformer
P2396	125 V. Power Transformer
P2391	Output Transformer
P1506	1st I.F. Transformer
P2394	2nd I.F. Transformer
P2412	Oscillator Coil
P2393	Antenna Coil

CORRECT ALIGNMENT PROCEDURE

The intermediate frequency (I.F.) stage should be aligned properly as the first step. After the I.F. transformers have been properly adjusted and peaked, the Broadcast Band alignment should be the next procedure.

I.F. ALIGNMENT

Adjust the test oscillator to 456 KC and connect the output to the grid of the first detector tube (6A7) through a .05 or .1 mfd. condenser. The ground on the test oscillator can be connected to the chassis ground. Align all three I.F. trimmers to peak or maximum reading on the output meter.

BROADCAST BAND ALIGNMENT

Adjust the oscillator to 1730 KC and connect the output to the antenna lead (Blue) through a .0002 mfd. mica condenser. Set the gang condenser to minimum capacity and adjust the gang condenser trimmer (oscillator) to receive this signal. After this has been carefully done, the next step is to set the generator to 1400 KC and after tuning in the signal adjust the antenna trimmer to peak. This is all that is necessary for the alignment unless the plates of the gang condenser have been bent out of shape. In case of bent plates, set the test oscillator and the receiver to 600 KC and bend the plates into the position for maximum output.

PROCEDURE FOR SETTING UP AND OPERATING AUTOMATIC PUSH BUTTONS

Select four strong local stations tuned in regularly. Now loosen **Locking Screw** (see chassis layout) several turns with a coin or a screw driver and press in any one of the four push buttons. Holding the button down, tune in any one of four selected stations by rotating the tuning knob (side knob) slowly back and forth until the signal is cleared.

Release the push button and press in another button and hold down, tuning in another favorite station with tuning knob. Follow the same procedure for the remaining stations. Now hold tuning knob (side knob) securely and with coin or screw driver, tighten locking screw. This screw holds all stations in adjustment.

In order to change any station already set up, to another, hold tuning knob securely, loosen locking screw and select the new station as explained above. Tear the correct station call letter tabs from the set of sheets supplied and push them into rectangular windows above each push button.

The automatic push button dial is now set up for quick tuning.

©John F. Rider, Publisher

MODEL 5AZ
Schematic, Socket Trimmers, Alignment

CONTINENTAL RADIO & TELEV. CO.

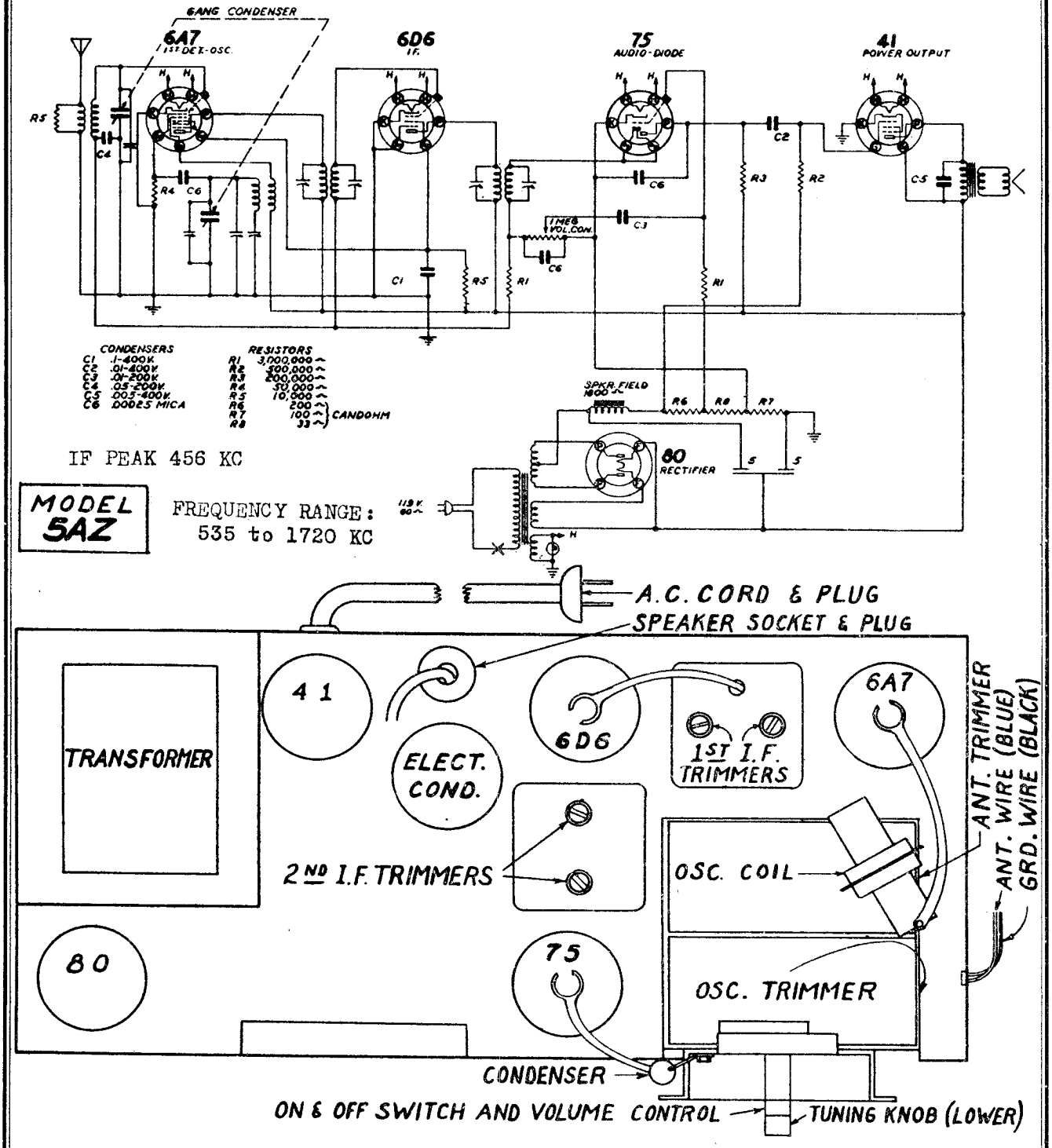

IF ALIGNMENT - Connect generator to control grid of 6A7 thru .05 MFD condenser, peak the IF transformer trimmers to 456 KC.

BROADCAST BAND - Generator at 1400 KC, connected to antenna thru 100 MMFD condenser. Receiver to 1400 KC, adjust front gang condenser trimmer to peak. Then adjust rear trimmer of gang condenser to peak. Generator at 600 KC, and receiver at approximately same frequency. While rocking the variable condenser across the signal adjust the oscillator padding condenser to maximum peak.

©John F. Rider, Publisher

CONTINENTAL RADIO & TELEV. CO.

MODEL 5C
Schematic, Socket
Trimmers, Alignment
Parts

NOTE: Do not attempt to ground this receiver as one side of the power line acts as the ground.

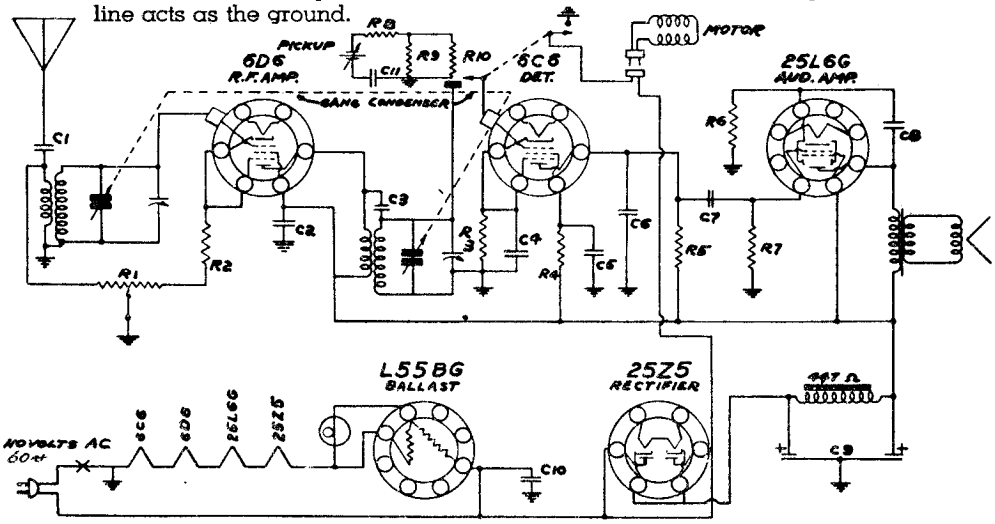

CONDENSERS		
NO.	CAPACITY	TYPE
C1	.002 MFD.	400 V.
C2	.1 "	200 V.
C3	1.5 mmf.	GIMMIK
C4	.25 Mfd.	200 V.
C5	.1 "	200 V.
C6	.0002 "	300 V.
C7	.01 "	400 V.
C8	.02 "	400 V.
C9	16-16 "	150 V. ELECT.
C10	.1 "	400 V.
C11	.006 "	600 V.

RESISTORS			
NO.	OHMS	WATTS	
R1	15,000		VOL. CONT.
R2	250	¼	
R3	25,000	¼	
R4	2,000,000	¼	
R5	500,000	¼	
R6	110	½	WIRE WOUND
R7	500,000	¼	
R8	1,000,000	¼	
R9	250,000	¼	
R10	500,000		PHONO VOL. CONT.

SCHEMATIC DIAGRAM
MODEL 5C
PHONO COMBINATION

5 TUBE PHONOGRAPH RADIO

BROADCAST BAND A.C. TUNED RADIO FREQUENCY

RANGE 535 - 1730 KILOCYCLES

ALIGNMENT DATA AND SERVICING

Connect a signal generator to the antenna lead of the receiver through a 100 Mmf. condenser. Set the dial pointer at 1400 KC. Set the generator at 1400 KC. Now adjust the antenna and RF trimmers of the gang condenser to maximum output.

5C PARTS LIST

PAPER CONDENSERS
P143 .02 Mfd. 400 V.
P142 .10 Mfd. 200 V.
P164 .01 Mfd. 400 V.
P141 .25 Mfd. 200 V.
P2268 .0002 Mfd. 600 V.

CARBON RESISTORS
P166 25,000 Ohm ¼ Watt 20%
P142 250 Ohm ¼ Watt 10%
P1114 2,000,000 Ohm ¼ Watt 20%
P137 500,000 Ohm ¼ Watt
P162 1,000,000 Ohm ¼ Watt
P139 250,000 Ohm ¼ Watt

WIRE WOUND RESISTORS
P2219 110 Ohm ½ Watt 10%

MOULDED MICA CONDENSERS
P2220 .10 Mfd. 400 V. 25%

ELECTROLYTIC CONDENSERS
P2218 Dual 18 Mfd. 150 W. V.

ADJUSTABLE CONDENSERS
P2204 Gang Condenser

TRANSFORMERS AND COILS
G5600 Interstage Coil Assembly
G5598 Antenna Coil Assembly

MISCELLANEOUS
P2213 Volume Control and Switch
P2343 Tube Socket (Glass)
P1928 Tube Sockets (Octal)
P533 Tube Shield Base
P531 Tube Shield Cap
P530 Tube Shield
P2215 Line Cord
G5594 Dial and Drive Assembly
P1503 Pilot Light Socket
P1713 Pilot Light
P2218 Speaker and Output Transformer
P2225 Walnut Knob
P2442 Phono Switch and Volume Control
P2258 Socket and Plug Assembly
P2368 Motor and Turn Table
P2260 Pickup Arm

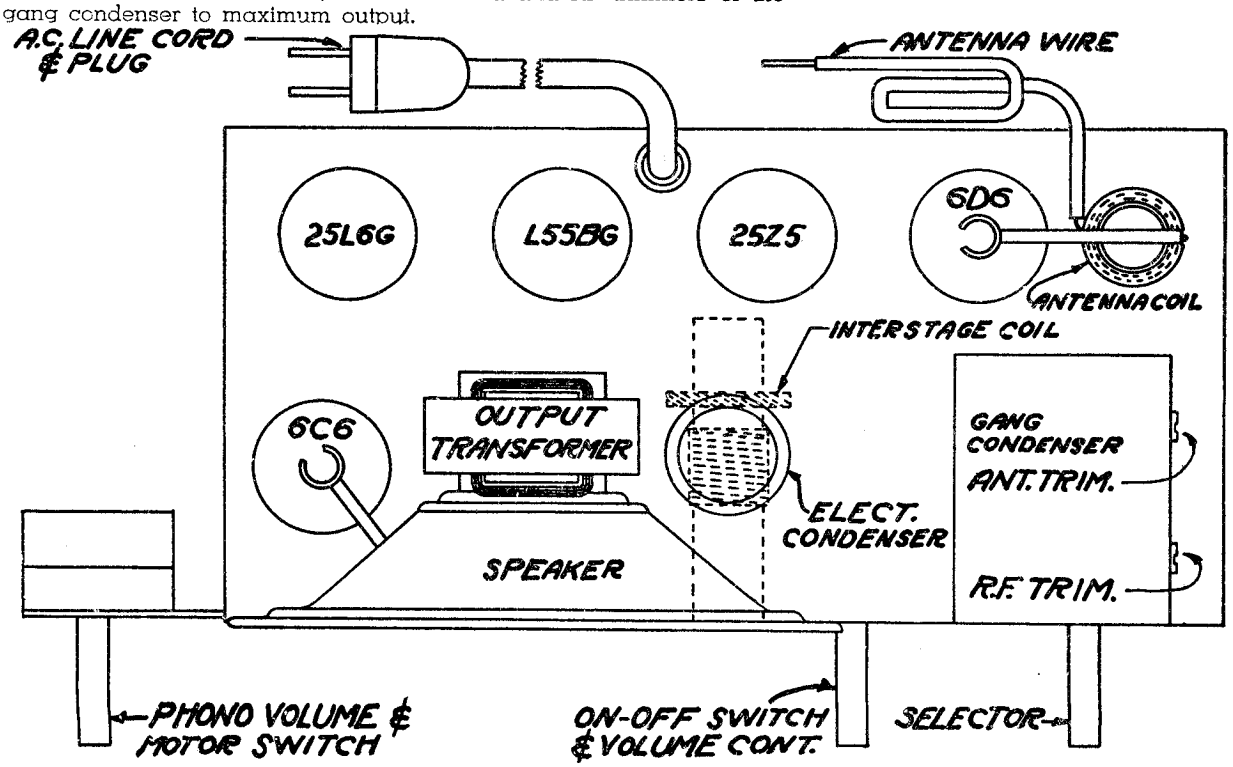

©John F. Rider, Publisher

MODEL 5E
Schematic, Socket

CONTINENTAL RADIO & TELEV. CO.

Trimmers, Parts
Alignment

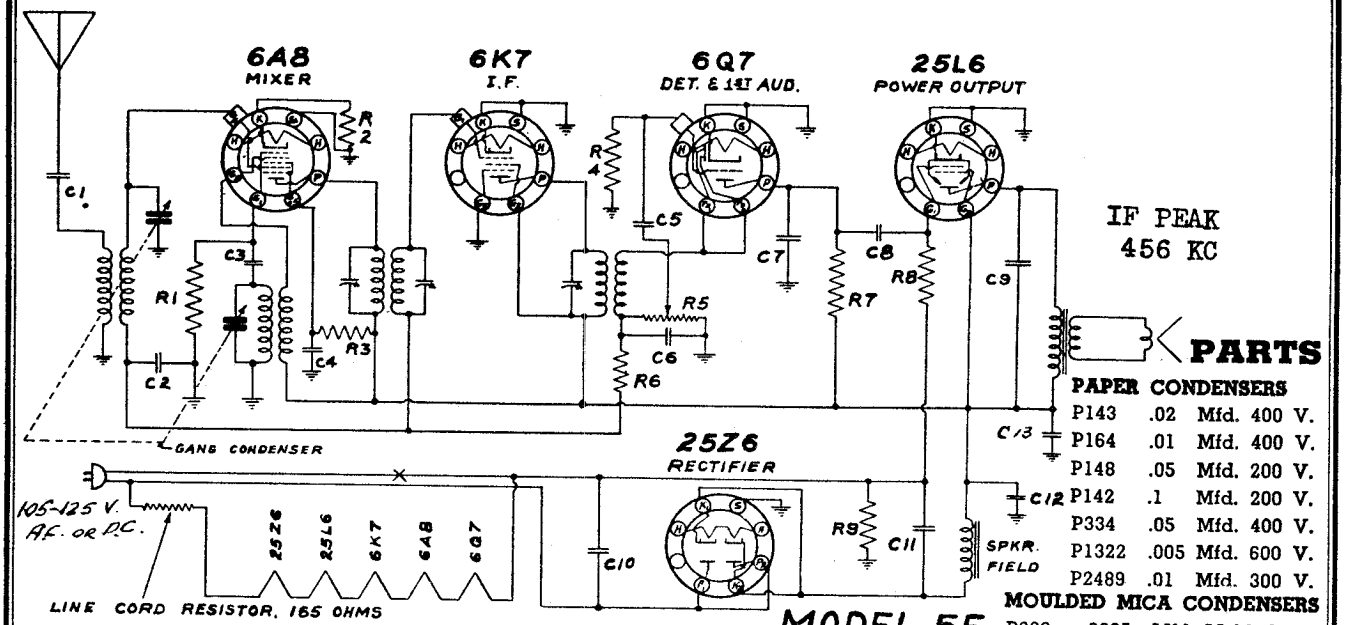

RESISTORS

№	OHMS	WATTS	SPL.
R1	50,000	¼	
R2	110	¼	
R3	40,000	¼	
R4	15 Meg.	¼	
R5	500,000		VOL. CONT.
R6	2 Meg.	¼	
R7	250,000	¼	
R8	500,000	¼	
R9	150	¼	±10%

CONDENSERS

№	Mfd.	TYPE
C1	.000250	MICA
C2	.02	400 V.
C3	.000050	MICA
C4	.01	400 V.
C5	.01	300 V.
C6	.00025	MICA
C7	.0005	MICA
C8	.01	400 V
C9	.005	600 V.

№	Mfd.	TYPE
C10	.05	400 V.
C11	30.	150 V.
C12	10.	150 V.
C13	.05	200 V.

PARTS

PAPER CONDENSERS

P143	.02 Mfd.	400 V.
P164	.01 Mfd.	400 V.
P148	.05 Mfd.	200 V.
P142	.1 Mfd.	200 V.
P334	.05 Mfd.	400 V.
P1322	.005 Mfd.	600 V.
P2489	.01 Mfd.	300 V.

MOULDED MICA CONDENSERS

P336	.0005 Mfd.	Molded
P817	.00025 Mfd.	Molded
P1382	.00005 Mfd.	Molded

CARBON RESISTORS

P139	20,000 Ohm	¼ Watt
P137A	500,000 Ohm	½ Watt
P1228	40,000 Ohm	¼ Watt
P417	50,000 Ohm	¼ Watt
P2200	110. Ohm	¼ Watt 10%
P2490	15,000,000 Ohm	¼ Watt 20%
P1114	2,000,000 Ohm	¼ Watt 20%

ELECTROLYTIC CONDENSERS

P2434	30 Mfd. 150 W. V.
P2427	10 Mfd. 150 W. V.

ADJUSTABLE CONDENSERS

P2429 Gang Condenser

Note: Do not attempt to ground this receiver as one side of the power line acts as the ground.

RANGE 535 - 1730 KILOCYCLES

CORRECT ALIGNMENT PROCEDURE The intermediate frequency (I.F.) stage should be aligned properly as the first step. After the I.F. transformers have been properly adjusted and peaked, the Broadcast Band alignment should be the next procedure.

I.F. ALIGNMENT Adjust the test oscillator to 456 KC and connect the output to the grid of the first detector tube (6A8) through a .05 or .1 mfd. condenser. Connect ground or test oscillator to chassis ground through a .1 mfd. condenser. Align all three I.F. trimmers to peak or maximum reading on the output meter.

BROADCAST BAND ALIGNMENT Adjust the oscillator to 1730 KC and connect the output to the antenna lead, through a .0001 mfd. mica condenser. Set the gang condenser to minimum capacity and adjust the gang condenser trimmer (oscillator) to receive this signal. After this has been carefully done, the next step is to set the generator to 1400 KC and after tuning in the signal adjust the antenna trimmer to peak. This is all that is necessary for the alignment unless the plates of the gang condenser have been bent out of shape. In case of bent plates, set the test oscillator and the receiver to 600 KC and bend the plates into the position for maximum output.

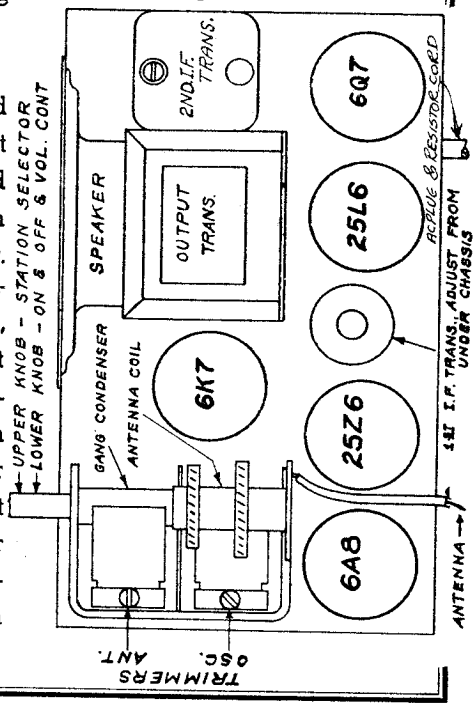

©John F. Rider, Publisher

CONTINENTAL RADIO & TELEV. CO.

MODEL 5F
Schematic, Socket
Trimmers, Parts
Alignment

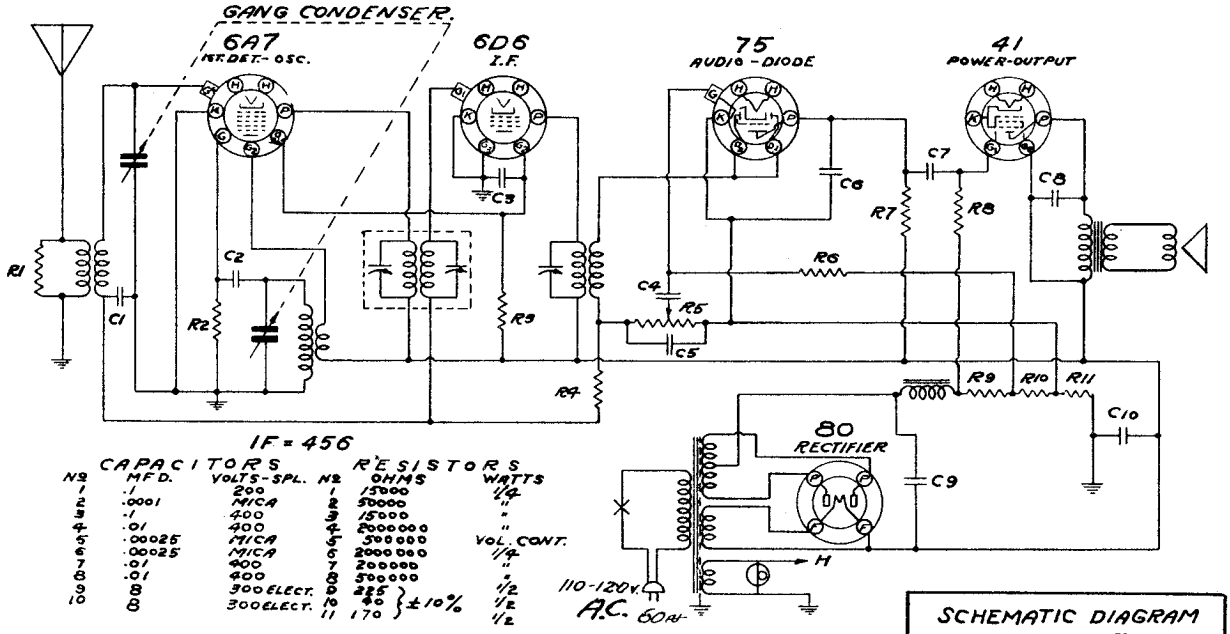

SCHEMATIC DIAGRAM
MODEL 5 F

BROADCAST BAND A.C. SUPERHETERODYNE

RANGE 535 - 1730 KILOCYCLES

CORRECT ALIGNMENT PROCEDURE The intermediate frequency (I.F.) stage should be aligned properly as the first step. After the I.F. transformers have been properly adjusted and peaked, the Broadcast Band alignment should be the next procedure.

I.F. ALIGNMENT Adjust the test oscillator to 456 KC and connect the output to the grid of the first detector tube (6A7) through a .05 or .1 mfd. condenser. The ground on the test oscillator can be connected to the chassis ground. Align all three I.F. trimmers to peak or maximum reading on the output meter.

BROADCAST BAND ALIGNMENT Adjust the oscillator to 1730 KC and connect the output to the antenna lead (Blue) through a .0002 mfd. mica condenser. Set the gang condenser to minimum capacity and adjust the gang condenser trimmer (oscillator) to receive this signal. After this has been carefully done, the next step is to set the generator to 1400 KC and after tuning in the signal adjust the antenna trimmer to peak. This is all that is necessary for the alignment unless the plates of the gang condenser have been bent out of shape. In case of bent plates, set the test oscillator and the receiver to 600 KC and bend the plates into the position for maximum output.

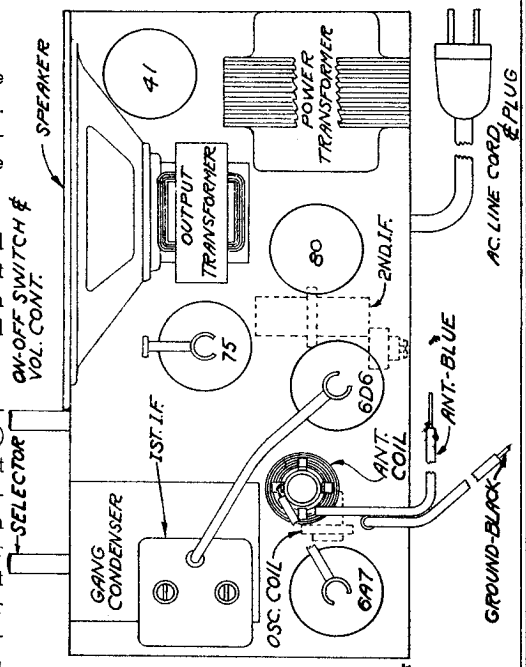

5F PARTS LIST

PAPER CONDENSERS		
P164	.01 Mfd. 400 V.	
P142	.10 Mfd. 200 V.	
P276	.10 Mfd. 400 V.	
CARBON RESISTORS		
P258	15,000 Ohm ¼ Watt	
P2186	2,000,000 Ohm ½ Watt	
P2340	40 Ohm ½ Watt ±10%	
P1890	225 Ohm ½ Watt ±10%	
P2488	170 Ohm ½ Watt ±10%	
P137	500,000 Ohm ¼ Watt	
P1220	200,000 Ohm ¼ Watt	
P1114	2,000,000 Ohm ¼ Watt	
P417	500,000 ¼ Watt	
MOULDED MICA CONDENSERS		
P480	.0001 Mfd. Mica	
P817	.00025 Mfd. Mica	
ELECTROLYTIC CONDENSERS		
P2456	8 Mfd. 300 W. V.	
ADJUSTABLE CONDENSERS		
P2448	Gang Condenser	
TRANSFORMERS AND COILS		
P2484	1st I.F. Transformer	
P2393	Antenna Coil	
P2485	2nd I.F. Transformer	
P2486	Oscillator Coil	
P2453	Power Transformer	
MISCELLANEOUS		
P2450	Volume Control and Switch	
P506	6A7 Tube Socket	
P536	6D6 Tube Socket	
P521	75 Tube Socket	
P1277	41 Tube Socket	
P492	80 Tube Socket	
P531	Tube Shield Cap	
P530	Tube Shield	
P533	Tube Shield Base	
P929	AC Line Cord	
G5648	Dial and Drive Assembly	
P1503	Pilot Light Socket	
P1504	Pilot Light	
P2454	Speaker and Output Transformer	
P2459	Walnut Knobs	
P2460	Ivory Knobs	

©John F. Rider, Publisher

MODEL 5G

CONTINENTAL RADIO & TELEV. CO.

Schematic, Socket Trimmers, Alignment

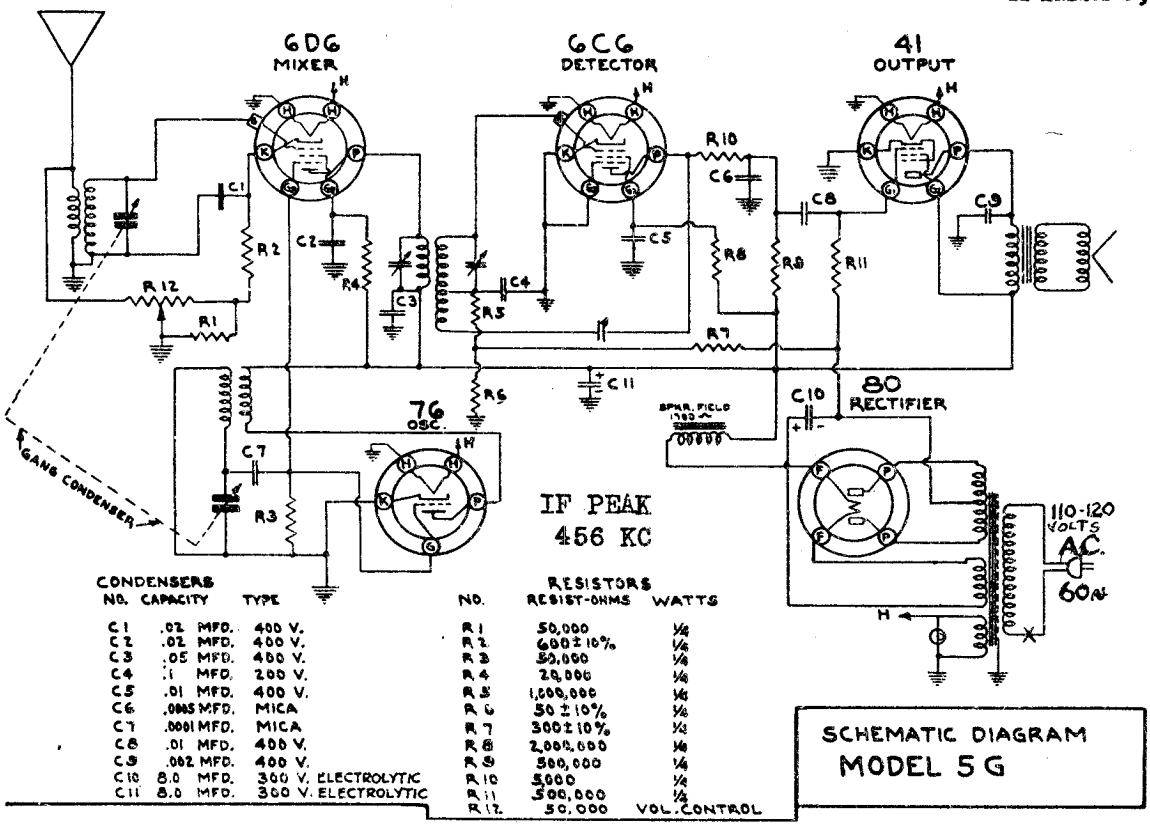

CONDENSERS				RESISTORS		
NO.	CAPACITY	TYPE	NO.	RESIST-OHMS	WATTS
C1	.02 MFD.	400 V.	R1	50,000	½
C2	.02 MFD.	400 V.	R2	600 ± 10%	½
C3	.05 MFD.	400 V.	R3	50,000	½
C4	.1 MFD.	200 V.	R4	20,000	½
C5	.01 MFD.	400 V.	R5	1,000,000	½
C6	.0005 MFD.	MICA	R6	50 ± 10%	½
C7	.0001 MFD.	MICA	R7	300 ± 10%	½
C8	.01 MFD.	400 V.	R8	2,000,000	½
C9	.002 MFD.	400 V.	R9	500,000	½
C10	8.0 MFD.	300 V. ELECTROLYTIC	R10	5000	½
C11	8.0 MFD.	300 V. ELECTROLYTIC	R11	500,000	½
			R12	50,000	VOL. CONTROL

SCHEMATIC DIAGRAM
MODEL 5G

BROADCAST BAND A.C. SUPERHETERODYNE

RANGE 535 - 1730 KILOCYCLES

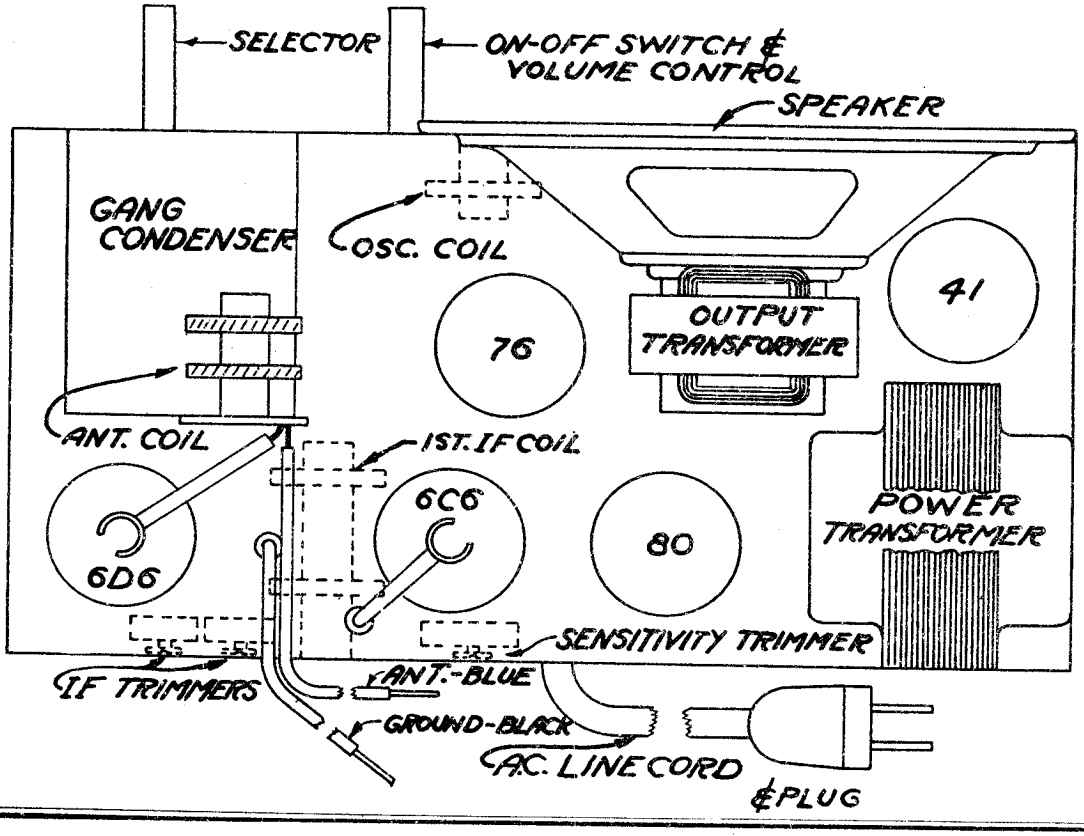

ALIGNMENT DATA AND SERVICING

Connect the signal generator through a .1 mfd. condenser to the grid of the 6D6 tube. Connect an output meter across the voice coil of the speaker. Set the generator to 456 K.C. and align the I.F. transformer of the receiver. Set the generator to 1400 K.C. Turn the dial of the for maximum reading on the output meter. Set the sensitivity control radio to 1400 K.C. Align the oscillator and antenna trimmers on the about ¼ turn counter-clockwise from the point where the whistles start gang condenser for maximum output on the meter. and re-align the I.F.

©John F. Rider, Publisher

CONTINENTAL RADIO & TELEV. CO.

MODEL 5VU
Schematic, Socket
Trimmers, Alignment

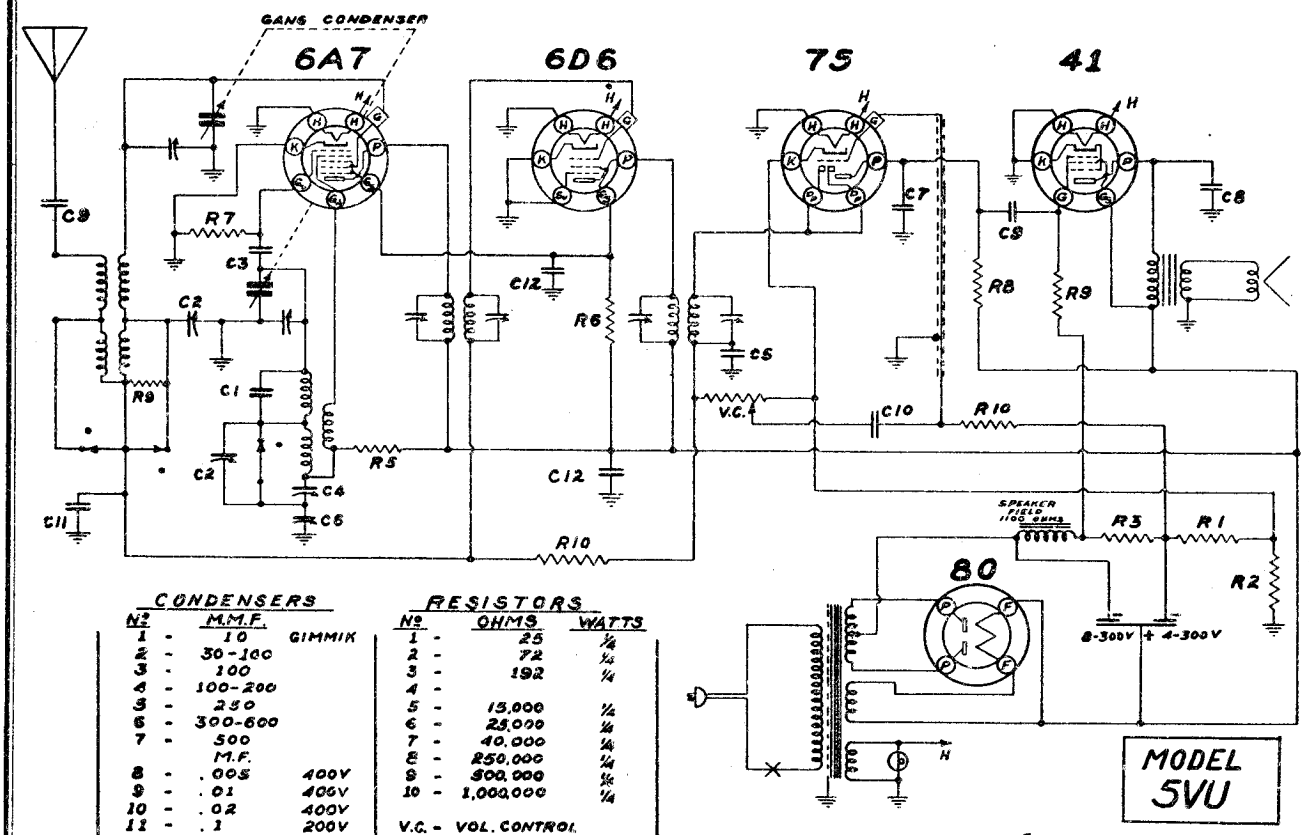

CONDENSERS

No.	M.M.F.	
1	10	GIMMIK
2	30-100	
3	100	
4	100-200	
5	250	
6	300-600	
7	500 M.F.	
8	.005	400V
9	.01	400V
10	.02	400V
11	.1	200V
12	.1	400V

RESISTORS

No.	OHMS	WATTS
1	25	¼
2	72	½
3	192	¼
4		
5	15,000	½
6	25,000	½
7	40,000	½
8	250,000	¼
9	500,000	½
10	1,000,000	¼
V.C.	VOL. CONTROL .5 MEG.	

SWITCHES IN BROADCAST POSITION

IF PEAK 456 KC

FREQUENCY RANGES -
535 to 1650 KC
375 to 150 KC

IF ALIGNMENT - Generator at 456 KC, connected to control grid of 6A7 thru a .05 MFD condenser. Peak IF trimmers in transformer shield cans.

BROADCAST - Generator at 1400 KC, connected to antenna lead thru 100 MMFD condenser. Peak front gang condenser trimmer, with dial set at the 1400 KC position. Next peak the rear gang condenser trimmer for maximum signal. Generator and receiver at 600 KC, peak the oscillator padding condenser for maximum signal while rocking the variable condenser across signal.

LONG WAVE - Generator at 375 KC, gang condenser open, peak oscillator trimmer. Generator at 325 KC, rotate condenser toward low end of dial to locate signal, then peak antenna trimmer. Pad the oscillator at 160 KC while rocking condenser.

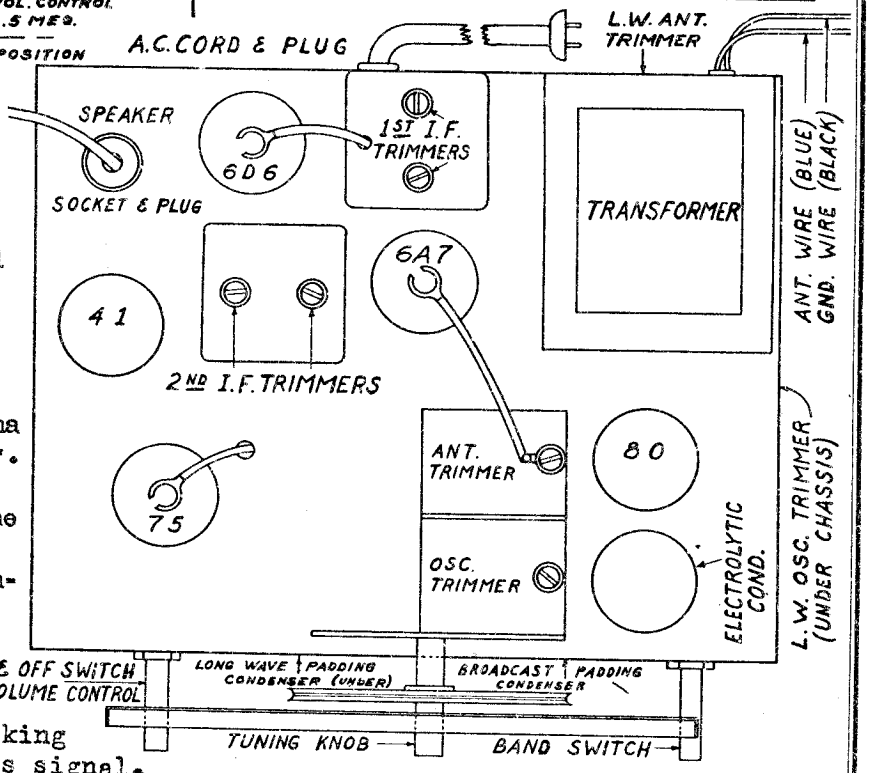

©John F. Rider, Publisher

MODEL 6D
Schematic
Socket, Trimmers
Alignment

CONTINENTAL RADIO & TELEV. CO.

MODEL 7A
Alignment

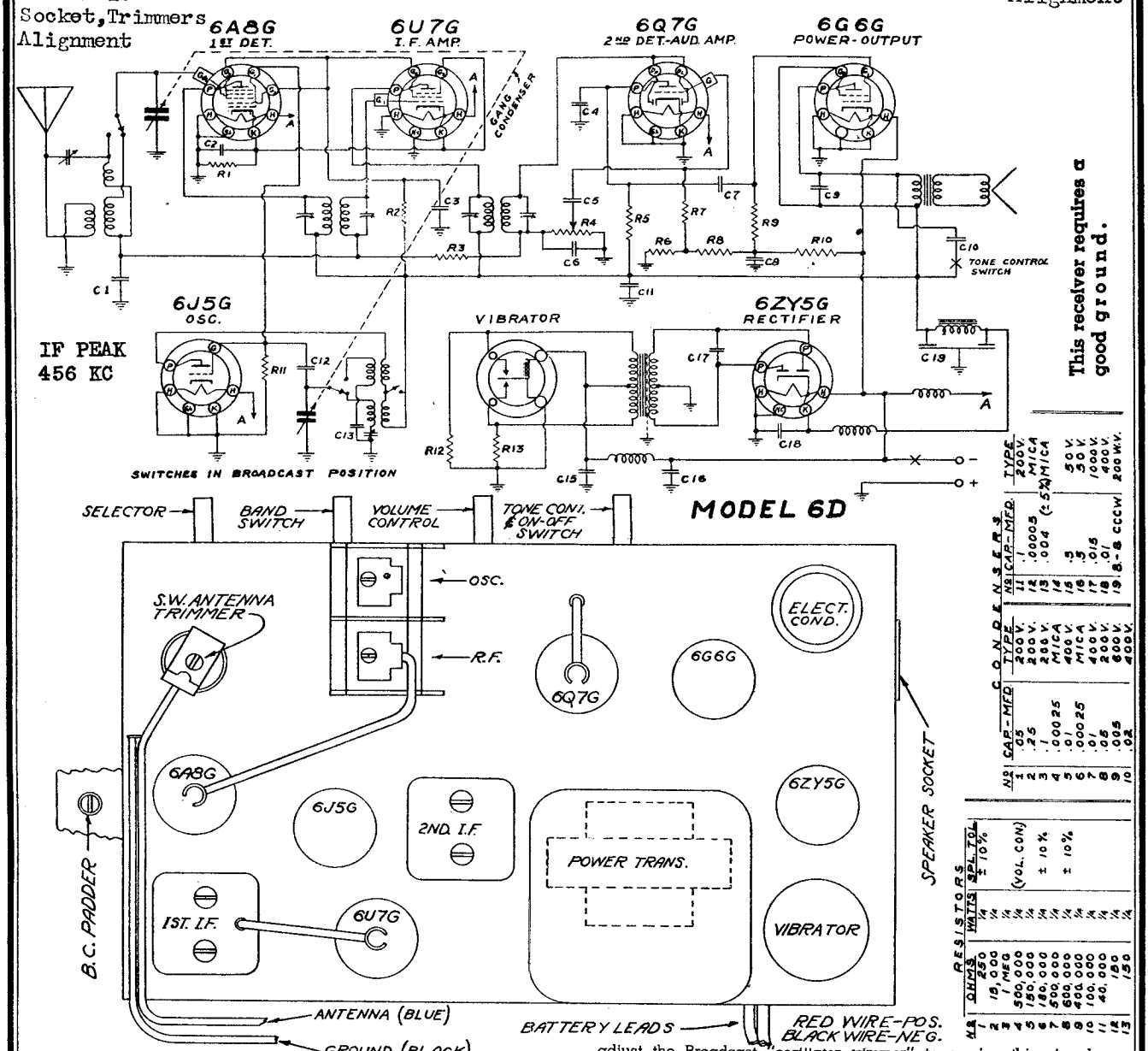

CONDENSERS	CAP-MFD	TYPE
1	.05	200V.
2	.25	200V.
3	.1	200V.
4	.00025	MICA
5	.01	400V.
6	.00025	MICA
7	.01	400V.
8	.05	400V.
9	.005	600V.
10	.02	400V.

CONDENSERS	CAP-MFD.	TYPE
11	.1	200V.
12	.00005	MICA
13	.004 (5%)	MICA
14	.5	50 V.
15	.5	50 V.
16	.015	1000V.
17	.01	400V.
18	8-8 CCCW	200 WV.

RESISTORS	OHMS	WATTS	SPL. TOL ± 10%
1	250	½	(VOL. CON)
2	15,000	½	± 10%
3	1 MEG	½	
4	500,000	½	
5	150,000	½	± 10%
6	150,000	½	
7	500,000	½	
8	600,000	½	
9	400,000	½	
10	100,000	½	
11	40,000	150	
12		150	
13			

ALIGNMENT

The alignment of this receiver requires the use of a test oscillator which will cover the frequencies of 456, 600, 1400, 1730, 6000, 16,000 and 18,100 KC and an output meter which is to be connected across the primary or secondary of the output transformer. If possible, all alignments should be made with the volume control on maximum and the test oscillator output as low as possible, to prevent the AVC from operating and giving false readings.

CORRECT ALIGNMENT PROCEDURE

The intermediate frequency I.F. stage should be aligned properly as the first step. After the I.F. transformers have been properly adjusted and peaked, the Broadcast Band should always be the next procedure; after which, the Short Wave Band may be aligned.

I.F. ALIGNMENT

With the wave switch in the broadcast band and the gang condenser set at minimum, adjust the test oscillator to 456 KC and connect the output of test oscillator or signal generator to the grid of the first detector tube (6A8G) through a .05 or .1 mfd. condenser. The ground on the test oscillator can be connected to the chassis ground. Align all four I.F. trimmers to peak or maximum reading on the output meter.

BROADCAST BAND ALIGNMENT

Connect the output of the signal generator to the antenna lead (blue) through a .0002 mfd. mica condenser. Set the gang condenser to minimum and the oscillator to 1730 KC and adjust the Broadcast "oscillator trimmer" to receive this signal. Make no other adjustments at this frequency. Then set the generator to 1400 KC and tune in this signal by rotating the gang to 1400 on the dial. Adjust the Broadcast "antenna" trimmer to a maximum signal. Set the signal generator to 600 KC and tune in the signal on the receiver.

Note: Approximately the same sensitivity should be noted at this point as was at 1400 KC. The signal strength may sometimes be improved by padding the circuits. This is done by slowly increasing or decreasing the oscillator padding condenser and, at the same time, continuously tuning back and forth across the signal with the receiver until the maximum reading is obtained on the output meter. This adjustment may seem a little complicated but is the easiest way to adjust the oscillator to the antenna. Return to 1400 KC and again go over the adjustments of this frequency to be certain that they were not put slightly out of alignment when adjustment was made at 600 KC.

SHORT WAVE BAND ALIGNMENT

The short wave band is adjusted by setting the generator to 16,000 KC* and tuning in the signal. Adjust the "short wave antenna" to give maximum output. As there is no variable low frequency padding condenser on this band, the sensitivity of the receiver should be checked at 6000 KC to determine whether the circuits are in line at this frequency. Should the receiver lack sensitivity at 6000 KC, the antenna and oscillator coils, as well as the .004 mica padding condenser, should be tested for defects as sometimes these components become subject to mechanical or electrical injuries, despite their rugged construction and liberal ratings.

*18,100 KC for Model 7A

©John F. Rider, Publisher

MODEL 6H
Schematic, Socket
Trimmers, Alignment

CONTINENTAL RADIO & TELEV. CO.

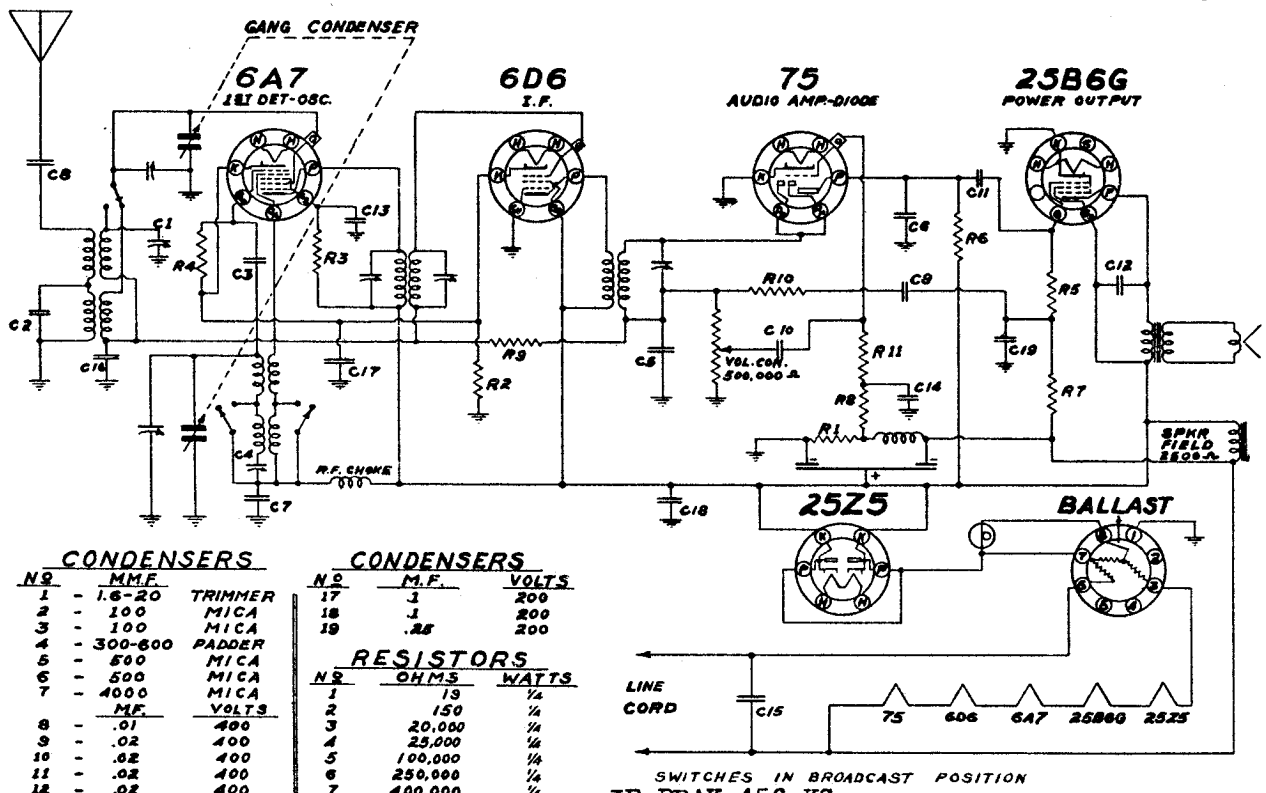

IF PEAK 456 KC

CONDENSERS

NO	MMF	
1	1.6-20	TRIMMER
2	100	MICA
3	100	MICA
4	300-600	PADDER
5	500	MICA
6	500	MICA
7	4000	MICA
	MF.	VOLTS
8	.01	400
9	.02	400
10	.02	400
11	.02	400
12	.02	400
13	.05	200
14	.05	200
15	.05	400
16	.1	200

CONDENSERS

NO	M.F.	VOLTS
17	.1	200
18	.1	200
19	.25	200

RESISTORS

NO	OHMS	WATTS
1	13	1/4
2	150	1/4
3	20,000	1/4
4	25,000	1/4
5	100,000	1/4
6	250,000	1/4
7	400,000	1/4
8	500,000	1/4
9	1 MEG	1/4
10	1 MEG	1/4
11	1 MEG	1/4

SCHEMATIC DIAGRAM
MODEL 6H

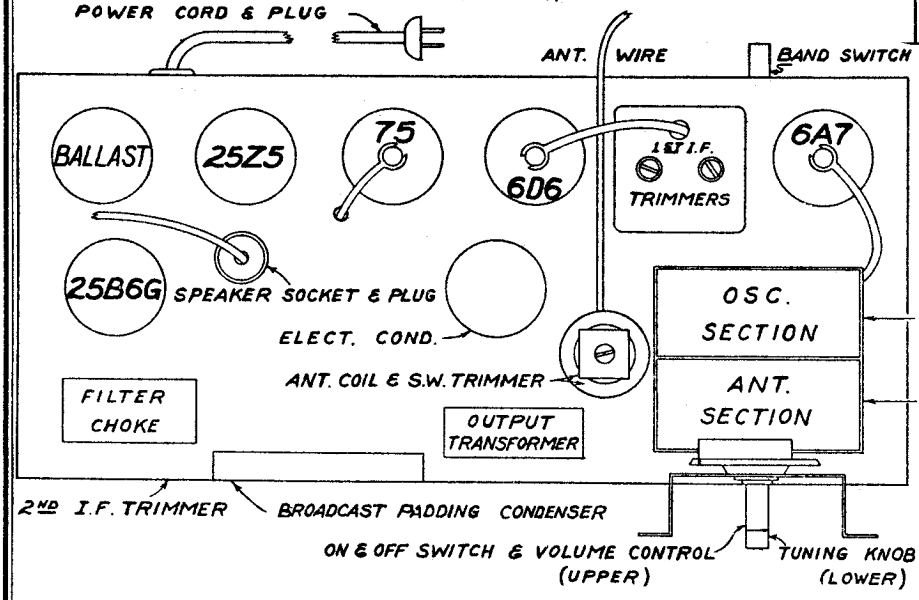

FREQUENCY RANGES :
535 to 1750 KC
5600 to 18100 KC

IF ALIGNMENT - Generator at 456 KC, connected to the control grid of the 6A7 tube, thru a .05 MFD condenser. Adjust IF trimmers to peak, they are located; two in transformer can above chassis, and other on front apron of chassis, is the left hand section.

BROADCAST BAND ALIGNMENT - Generator at 1400 KC, connected to antenna lead of receiver thru 100 MMFD condenser. Dial at 1400 KC, adjust rear gang condenser trimmer (OSC) to peak, then front section of gang condenser to peak. Generator at 600 KC, receiver dial at approximately 600 KC, while rocking the variable condenser across signal adjust oscillator padder to maximum peak. SHORTWAVE BAND - Generator at 600 KC, rotate condenser from high frequency end until generator signal is heard, then peak trimmer on antenna coil. No other shortwave band adjustments required on this receiver. Repeat all adjustments.

©John F. Rider, Publisher

MODEL 6L
Schematic, Socket Trimmers, Alignment

CONTINENTAL RADIO & TELEV. CO.

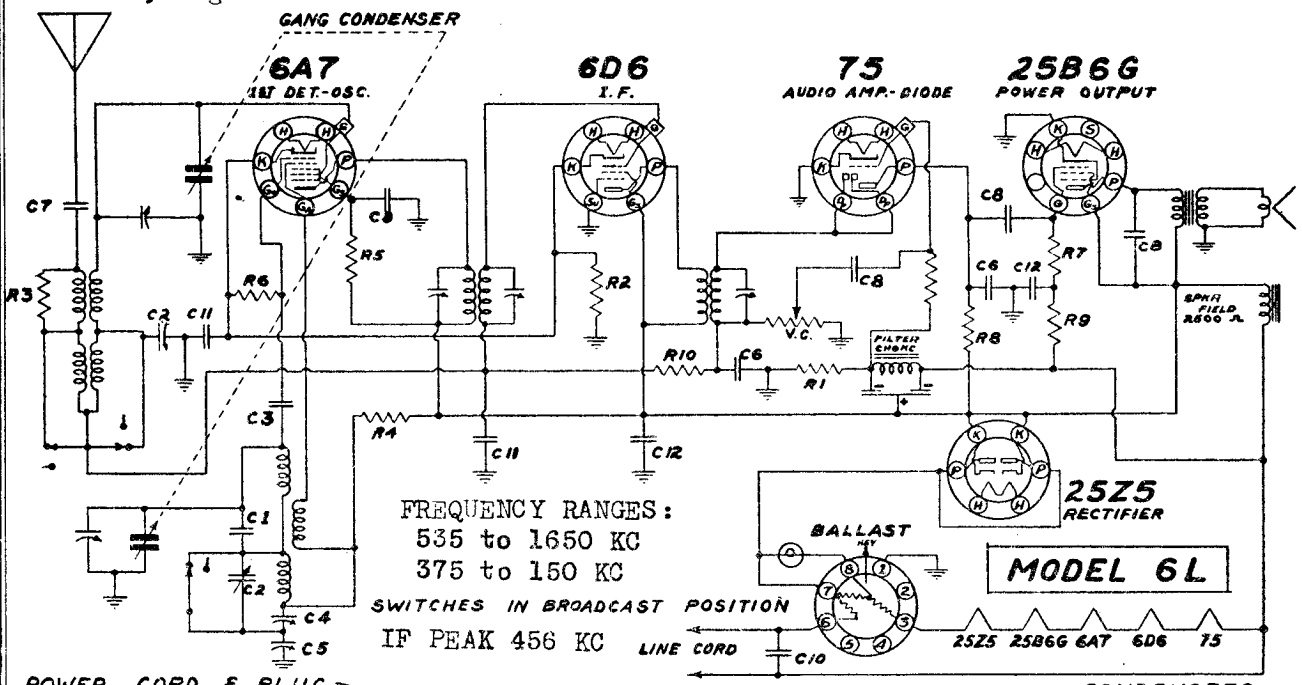

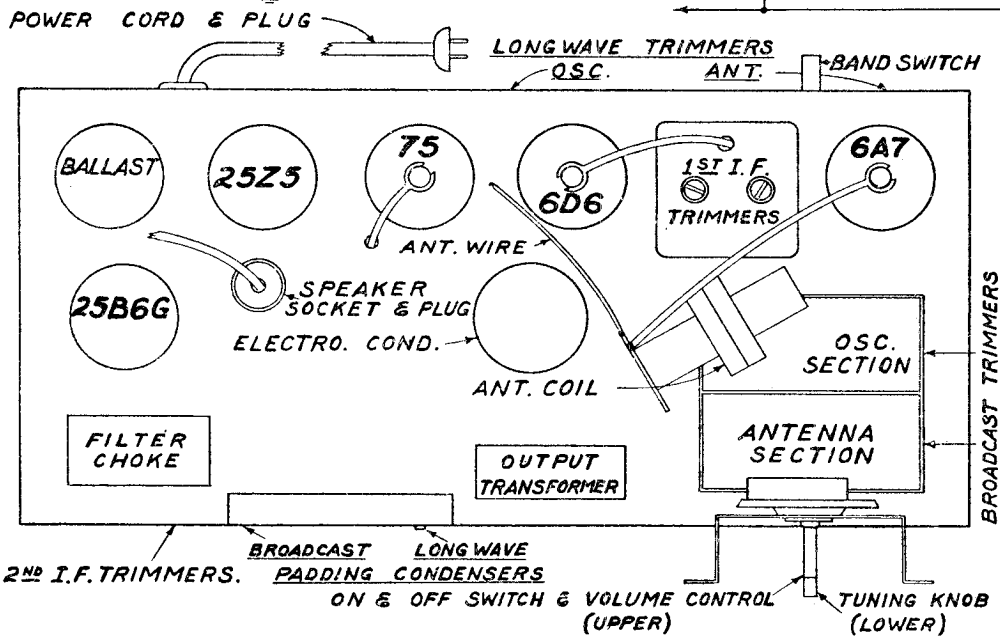

CONDENSERS

No.	M.M.F.	
C1	10	GIMMIK
C2	30-100	MICA
C3	100	"
C4	100-200	"
C5	300-600	"
C6	500	"
	M.F.	
C7	.01	400 V.
C8	.02	400 V.
C9	.05	200 V.
C10	.05	400 V.
C11	.1	200 V.
C12	.25	200 V.

RESISTORS

No.		OHMS	WATTS
R1		18	
R2	*	300	½
R3		8,000	½
R4		15,000	½
R5		20,000	½
R6		25,000	½
R7		100,000	½
R8		250,000	½
R9		400,000	½
R10		1,000,000	½

V.C. - ½ MEG. VOLUME CON.
* TOLERANCE ± 10%

IF ALIGNMENT - Generator at 456 KC, and connected to the control grid of the 6A7 thru a .05 MFD condenser. Align the three IF trimmers to maximum peak. The three trimmers are located as follows : two are located in the IF can on the top of the chassis, the third is located on the front apron of the chassis and is the left hand section.

BROADCAST - Generator at 1400 KC, connected to the antenna thru a 100 MMFD condenser. Dial set at 1400 KC, peak rear trimmer of gang condenser (OSC), then peak front trimmer. Shift generator and dial to 600 KC, while rocking gang condenser peak the oscillator padding condenser for maximum resonance.

LONG WAVE - Generator at 375 KC, peak oscillator trimmer, gang condenser completely open. Generator at 325 KC, peak the antenna trimmer, mounted on longwave antenna coil, after signal has been found by rotation condenser from high freend of dial. Pad the oscillator condenser at 160 KC while rocking condenser.

©John F. Rider, Publisher

CONTINENTAL RADIO & TELEV. CO.

MODEL 6PU
Schematic, Socket
Trimmers, Alignment

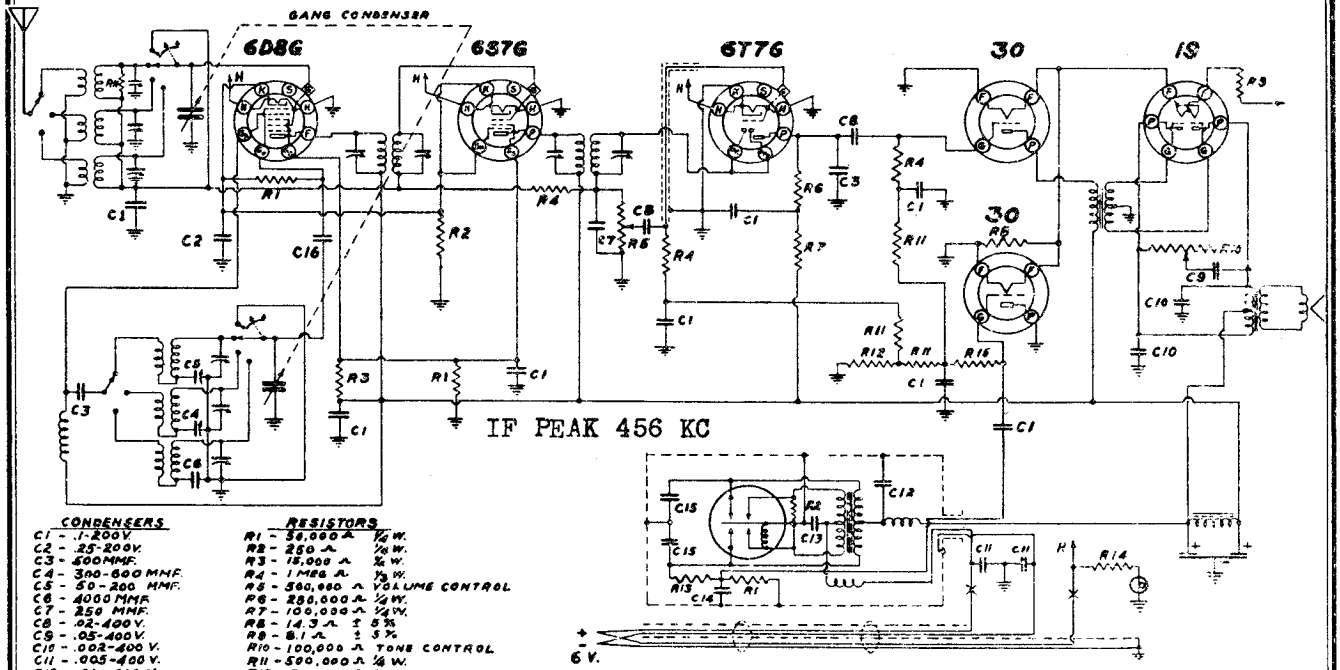

CONDENSERS

C1 - .1-200 V.
C2 - .25-200 V.
C3 - 500 MMF.
C4 - 300-600 MMF.
C5 - 50-200 MMF.
C6 - 4000 MMF.
C7 - 250 MMF.
C8 - .02-400 V.
C9 - .05-400 V.
C10 - .002-400 V.
C11 - .005-400 V.
C12 - .01 - 600 V.
C13 - .5 -10 V.
C14 - .03 - 200 V.
C15 - .01-1000 V.
C16 - 100 MMF.

RESISTORS

R1 - 56,000 Ω 1/2 W.
R2 - 250 Ω 1/2 W.
R3 - 18,000 Ω 1/2 W.
R4 - 1 MEG Ω 1/2 W.
R5 - 500,000 Ω VOLUME CONTROL
R6 - 220,000 Ω 1/2 W.
R7 - 100,000 Ω 1/2 W.
R8 - 14.3 Ω ± 5%
R9 - 8.1 Ω ± 5%
R10 - 100,000 Ω TONE CONTROL
R11 - 500,000 Ω 1/2 W.
R12 - 70,000 Ω 1/2 W.
R13 - 200,000 Ω 1/2 W.
R14 - 70 Ω ± 10%
R15 - 500,000 Ω 1/2 W.

6PU Chassis

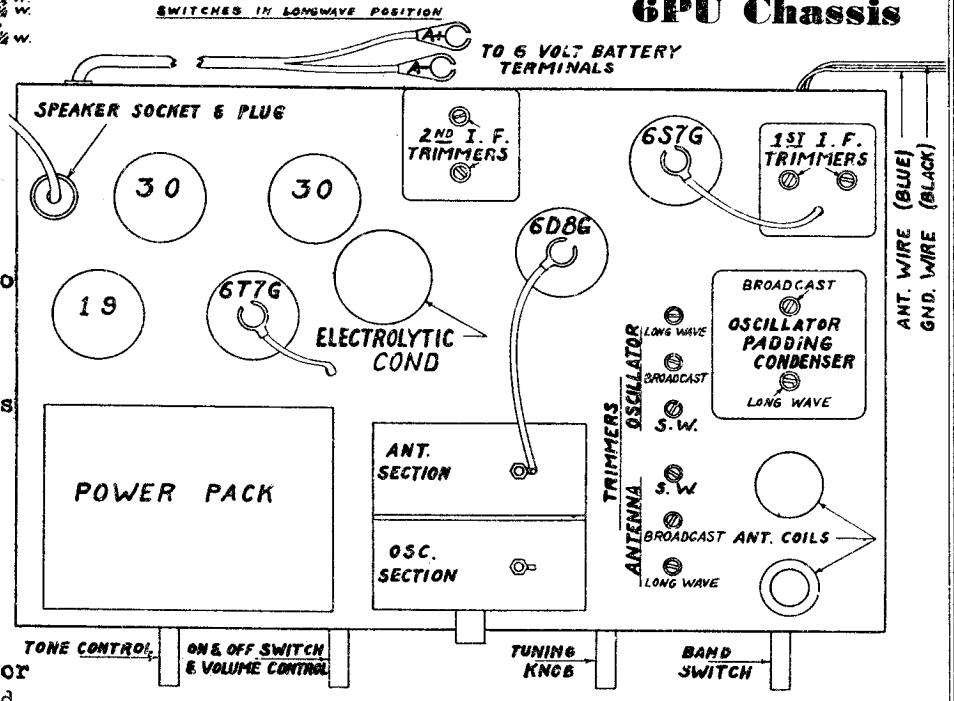

FREQUENCY RANGES :
550 to 1700 KC
150 to 375 KC
5.6 to 18.1 MC

IF ALIGNMENT-Generator at 456 KC, connected to control grid of 6D8G thru a .05 MFD condenser, then peak the IF transformer trimmers for maximum response.

BROADCAST BAND - Generator at 1730 KC, the gang condenser out of mesh, peak oscillator trimmer. Dial and Generator at 1400 KC, peak antenna and pre-selector trimmers. Generator and dial at 600 KC, while rocking variable condenser across signal, peak the oscillator padder to maximum.

SHORTWAVE BAND - Generator to 18.1 MC, variable condenser at minimum, peak the S.W. oscillator trimmer. Generator and dial at 16 MC, peak antenna trimmer. No provisions for low frequency padding have been made in this band. Check response at 6 MC.

LONGWAVE BAND - Set gang condenser to minimum and generator to 380 KC, peak the longwave oscillator trimmer, then shift the generator signal to 325 KC, peak the antenna trimmer. Next set the generator to 160 KC, — then peak the longwave oscillator padding condenser to maximum response while rocking variable condenser.

©John F. Rider, Publisher

MODEL 7A
Schematic, Socket
Trimmers, Alignment

CONTINENTAL RADIO & TELEV. CO.

FOR **ALIGNMENT DATA AND SERVICING**- SEE MODEL 6D.

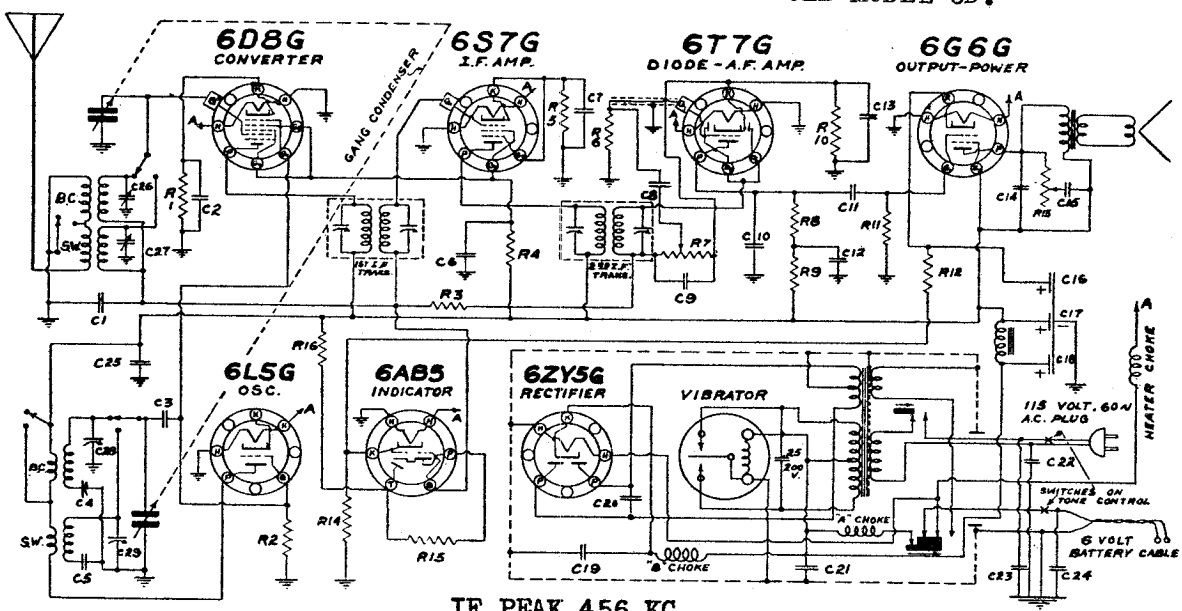

IF PEAK 456 KC

CONDENSERS

№	CAPACITY	TYPE	№	CAPACITY	TYPE
1	.05 Mfd.	200 V.	14	.005 Mfd.	600 V.
2	.05 Mfd.	200 V.	15	.05 "	400 V.
3	50 mmf.	MICA	16	.5 "	25 V.
4	300-600 mmf	MICA	17	.8 "	200 V.
5	4000 mmf	M. ±5%	18	.8 "	200 V.
6	.1 Mfd.	200 V.	19	.01 "	600 V.
7	.05 "	200 V.	20*	.015 "	1000 V.
8	.01 "	400 V.	21	.5 "	10 V.
9	250 mmf	MICA	22	.05 "	400 V.
10	250 "	"	23	.01 "	600 V.
11	.01 Mfd.	400 V.	24	.5 "	10 V.
12	.1 "	200 V.	25	.1 "	200 V.
13	.5 "	200 V.	* OIL TYPE		

RESISTORS

№	OHMS	WATTS	SPL. TOL.
1	1500	½	± 10%
2	40,000	½	± 10%
3	1,000,000	½	
4	30,000	½	
5	1,500	½	± 10%
6	1,000,000	½	
7	500,000	½	(VOL. CONT.)
8	500,000	½	
9	200,000	½	
10	10,000	½	± 10%
11	500,000	½	
12	325	½	± 10%
13	100,000	½	(TONE CONT.)
14	110	½	± 10%
15	250,000	½	
16	15,000	½	

BAND SWITCH IN BROADCAST POSITION.
POWER SWITCH IN BATTERY POSITION.
I.F. - 456 K.C.
C26 TO C29, 2-20 mmf TRIMMERS.

SCHEMATIC DIAGRAM
MODEL 7A

This receiver requires a good ground.

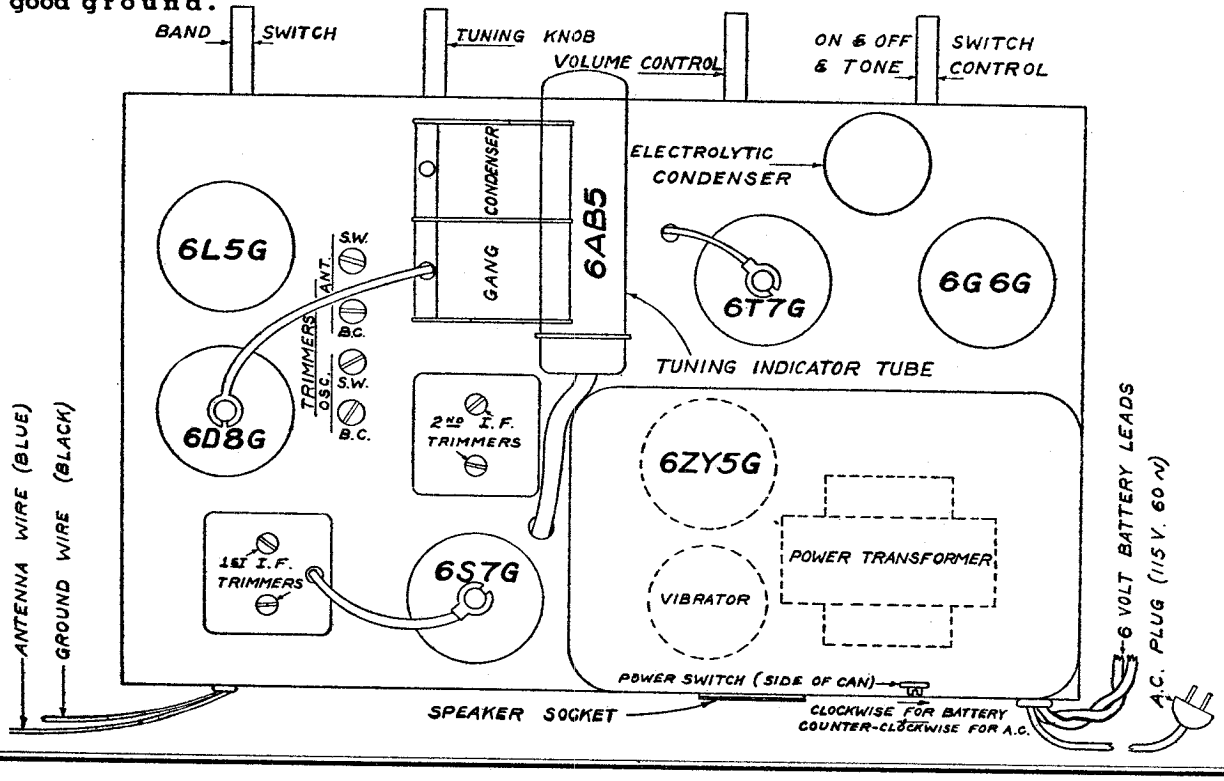

©John F. Rider, Publisher

MODEL 7G
Schematic, Socket
Trimmers, Tuner
Alignment

CONTINENTAL RADIO & TELEV. CO.

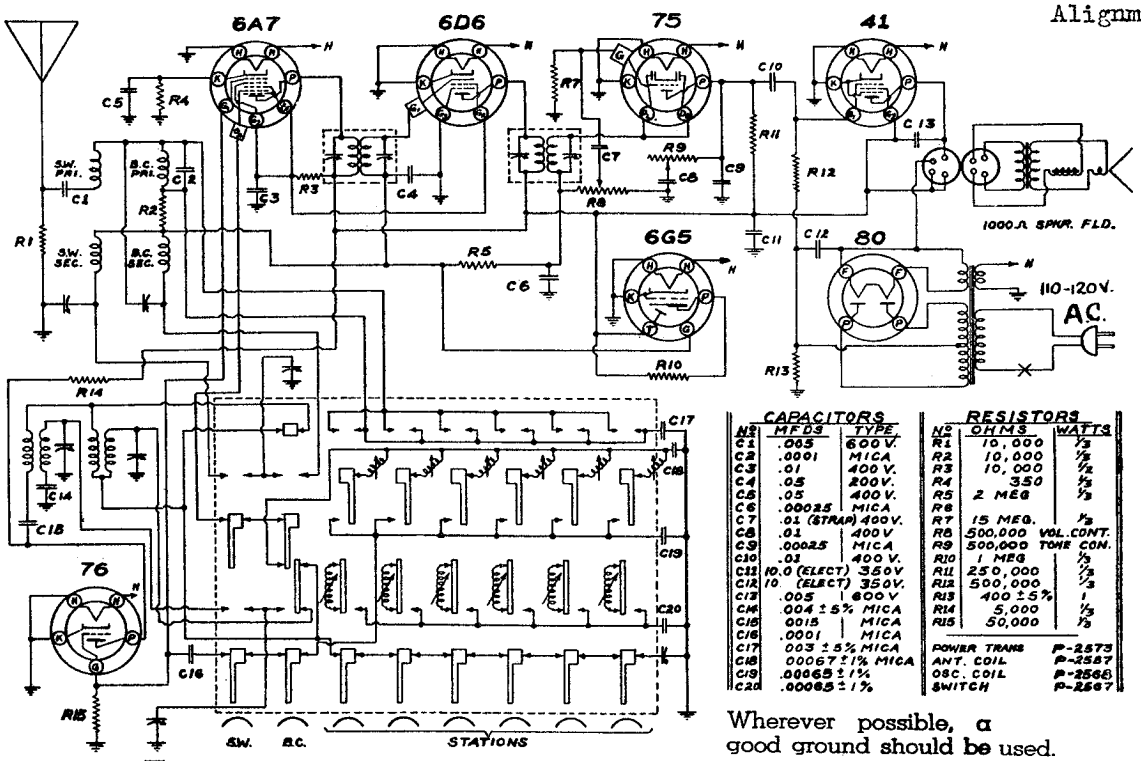

IF PEAK
456 KC

CAPACITORS		
NO	MFDS	TYPE
C1	.005	600 V.
C2	.0001	MICA
C3	.01	400 V.
C4	.05	200 V.
C5	.05	400 V.
C6	.00025	MICA
C7	.01 (STRAP)	400 V.
C8	.01	400 V
C9	.00025	MICA
C10	.01	400 V.
C11	10.0 (ELECT)	350 V.
C12	10. (ELECT)	350 V.
C13	.005	600 V.
C14	.004 ± 5%	MICA
C15	.0015	MICA
C16	.0001	MICA
C17	.003 ± 5%	MICA
C18	.00067 ± 1%	MICA
C19	.00065 ± 1%	
C20	.00065 ± 1%	

RESISTORS		
NO	OHMS	WATTS
R1	10,000	1/2
R2	10,000	1/2
R3	10,000	1/2
R4	350	1/2
R5	2 MEG	1/2
R6		
R7	15 MEG.	1/2
R8	500,000	VOL. CONT.
R9	500,000	TONE CON.
R10	1 MEG	1/2
R11	250,000	1/2
R12	500,000	1/2
R13	400 ± 5%	1
R14	5,000	1/2
R15	50,000	1/2

POWER TRANS	P-2573
ANT. COIL	P-2587
OSC. COIL	P-2566
SWITCH	P-2567

Wherever possible, a good ground should be used.

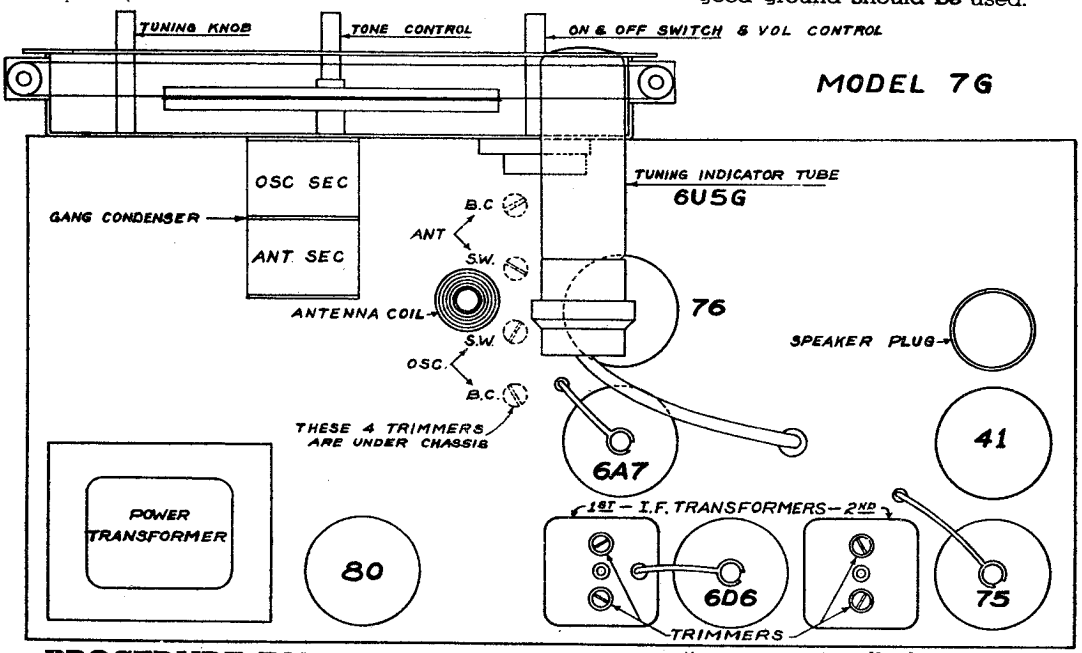

This receiver is designed to operate over two tuning ranges; the broadcast range which extends from 545 to 1720 kc (174.4 to 550.4 meters) and the international short wave band which extends from 5800 to 18,100 kc (16.5 to 51.7 meters). This latter range is the one which includes the 5 internationally assigned bands—the 16, 19, 25, 31 and 49 meter bands.

CONVENTIONAL ALIGNMENT, SEE SPECIAL SECTION, VOL. VIII.

PROCEDURE FOR SETTING UP AUTOMATIC PUSH BUTTONS

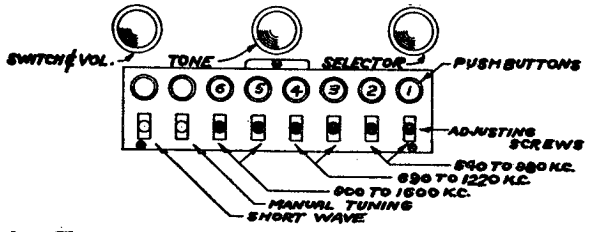

1. Choose a station having a frequency within the range of button No. 1 (540 to 980 kc).
2. Press "Manual Tuning" button and tune this station conventionally by using the selector knob.
3. Now press button No. 1 and turn adjusting screw in either direction until the previously selected station is heard. Adjust the screw until the dark area of the "electric eye" is smallest. This setting will give the best tonal response with maximum sensitivity.
4. Remove the call letters of the station from the call letter sheet furnished and insert in the window of the adjusting screw.
5. Repeat the above procedure for the remaining five (5) stations.

NOTE: It is advisable to retain the call letter sheet in case of station change later on.

©John F. Rider, Publisher

MODEL 8T
Schematic, Socket
Trimmers, Alignment

CONTINENTAL RADIO & TELEV. CO.

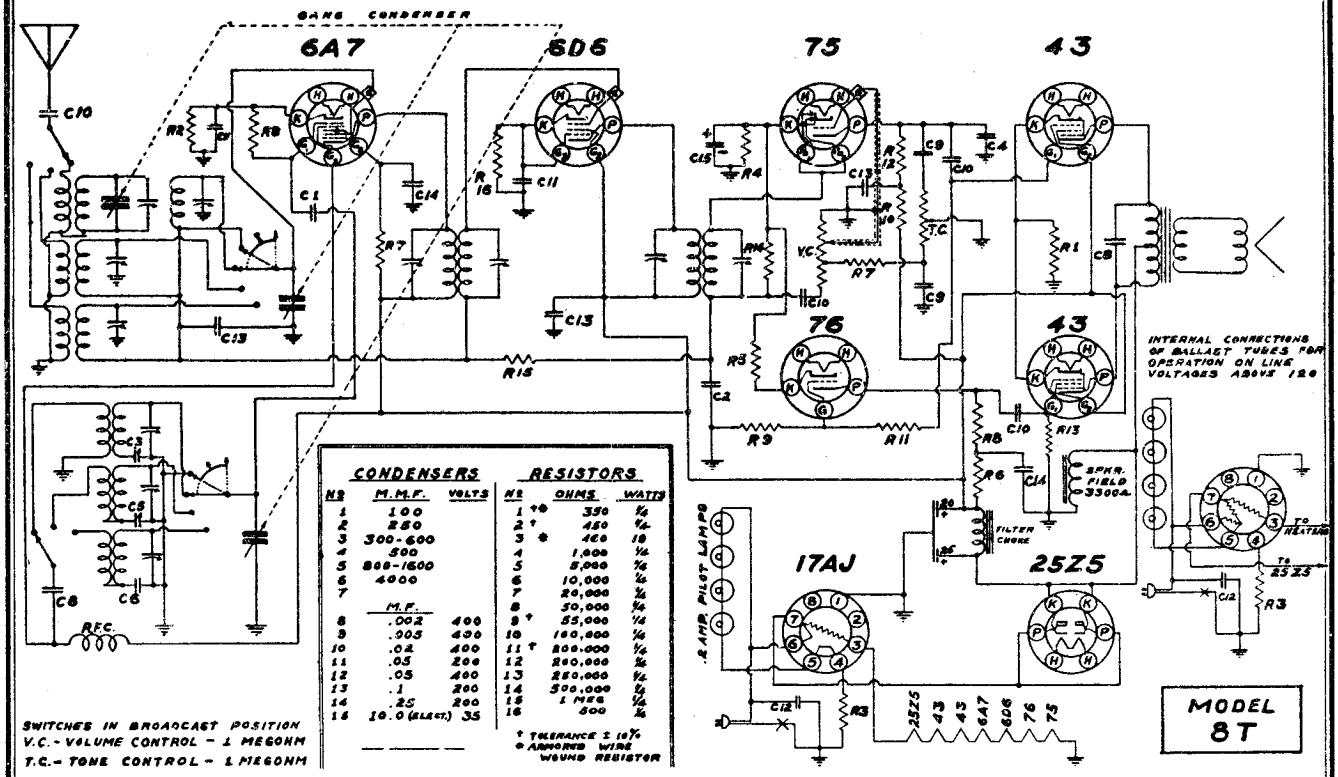

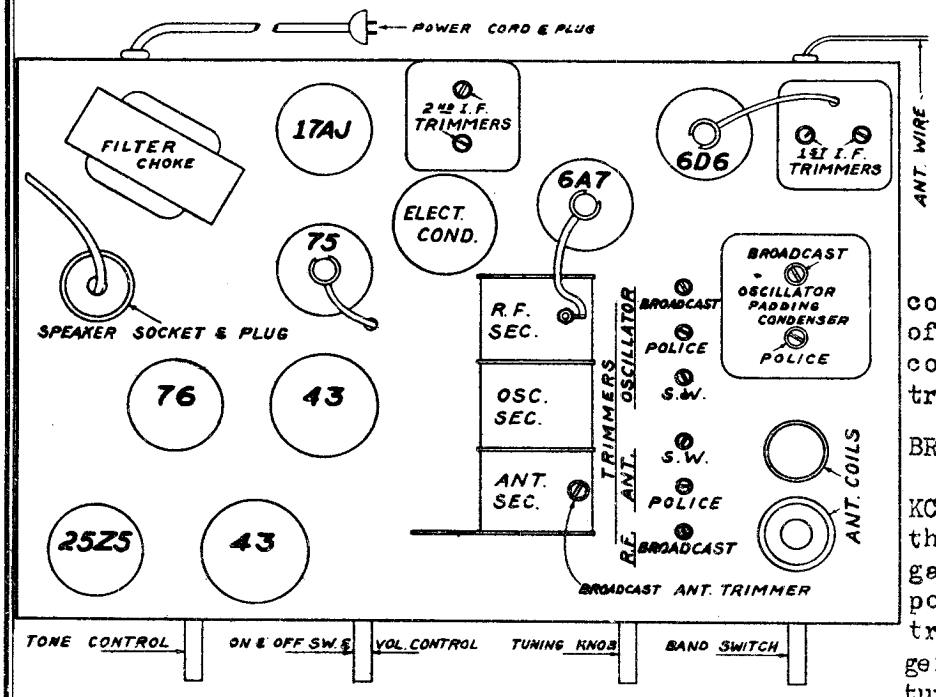

IF PEAK 456 KC

FREQUENCY RANGES :
535 to 1730 KC
1.7 to 5.6 MC
5.6 to 18.1 MC

IF ALIGNMENT -
Generator at 456 KC connected to control grid of 6A7 thru a .05 MFD condenser. Peak four IF transformer trimmers.

BROADCAST BAND -
Generator at 1730 KC, connected to antenna thru 200 MMFD condenser, gang condenser at minimum position, peak oscillator trimmer. Dial and signal generator at 1400 KC, tune in signal and then peak the antenna trimmer and pre-selector trimmer. Generator and dial at 600 KC, while rocking gang condenser, adjust oscillator padder to peak.

POLICE BAND - Replace 200 MMFD condenser with 400 ohm resistor, generator set to 5600 KC, peak oscillator trimmer. Generator to 4000 KC, peak antenna trimmer.

SHORTWAVE BAND - Generator at 18.1 MC, peak oscillator trimmer. Generator set to 16 MC, peak the antenna trimmer. Check response at 6 MC. No padding required.

SEE MODEL 8K (see index) for telephone dial data and adjustments.

©John F. Rider, Publisher

CONTINENTAL RADIO & TELEV. CO.

MODEL 8TU
Schematic, Socket Trimmers, Alignment

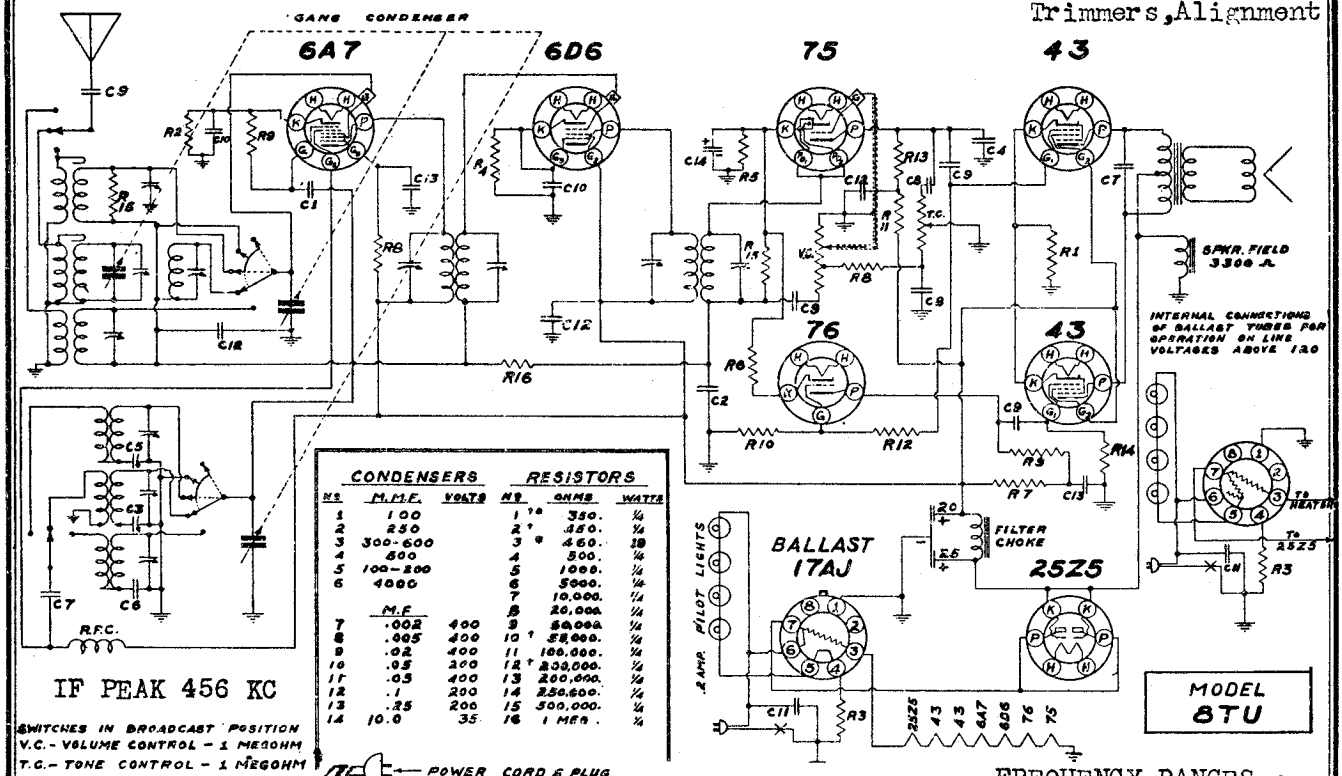

CONDENSERS			RESISTORS		
NO.	M.M.F.	VOLTS	NO.	OHMS	WATTS
1	100		1 †*	350.	½
2	250		2 †	350.	½
3	300-600		3 *	450.	10
4	500		4	500.	½
5	100-200		5	1000.	½
6	4000		6	5000.	½
			7	10,000.	½
			8	20,000.	½
	M.F.		9	50,000.	½
7	.002	400	10 †	58,000.	½
8	.005	400	11	100,000.	½
9	.02	400	12 †	200,000.	½
10	.05	200	13	200,000.	½
11	.05	400	14	250,000.	½
12	.1	200	15	500,000.	½
13	.25	200	16	1 MEG.	½
14	10.0	35			

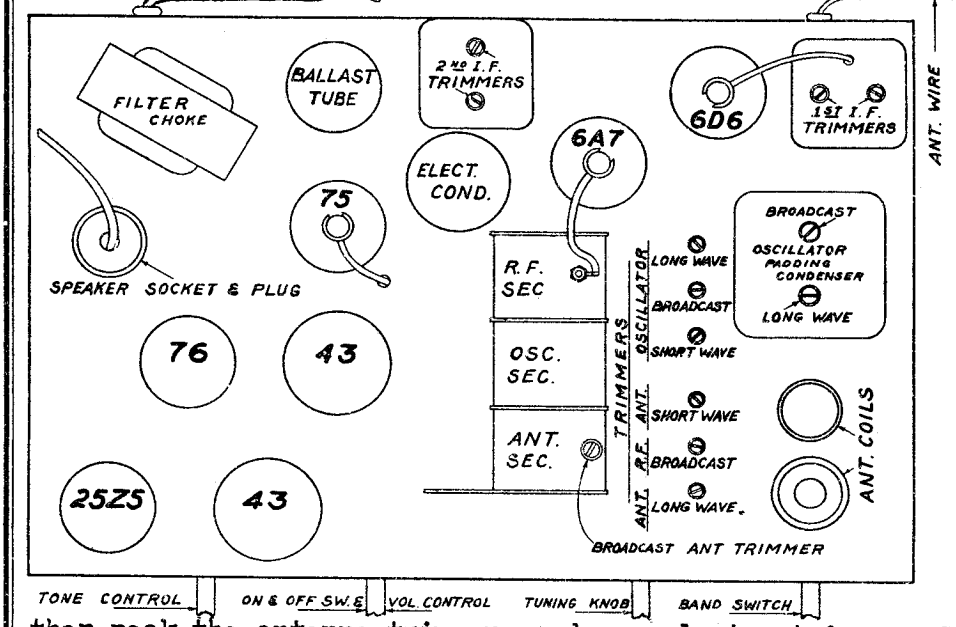

FREQUENCY RANGES :
550 to 1730 KC
375 to 150 KC
5.6 to 18.1 MC

IF ALIGNMENT - Generator at 456 KC, connected to the control grid of the 6A7, thru a .05 MFD condenser. Peak four IF trimmers.

BROADCAST BAND - Generator at 1730 KC, connected to the antenna thru a 200 MMFD condenser, gang condenser at minimum, peak oscillator trimmer. Dial and signal generator at 1400 KC, tune in signal, and then peak the antenna trimmer, and preselector trimmer. Generator and dial at 600 KC, while rocking variable condenser, adjust oscillator padding condenser to peak.

SHORTWAVE BAND - Generator set at 18.1 MC, then peak the oscillator trimmer. Generator reset to 16 MC, after which the antenna trimmer is adjusted to peak.

LONGWAVE BAND - Generator set at 380 KC, connected to antenna thru a 200 MMFD condenser, variable condenser at minimum, peak oscillator trimmer. Generator at 325 KC, locate signal on dial, peak antenna trimmer. Generator at 160 KC, pad oscillator circuit to peak. Rock variable condenser during adjustment. Repeat all adjustments to secure maximum response on all bands.

SEE MODEL 8K (see index) for telephone dial data and adjustments.

©John F. Rider, Publisher

MODEL 9G
Schematic, Socket
Trimmers, Alignment
Tuner

CONTINENTAL RADIO & TELEV. CO.

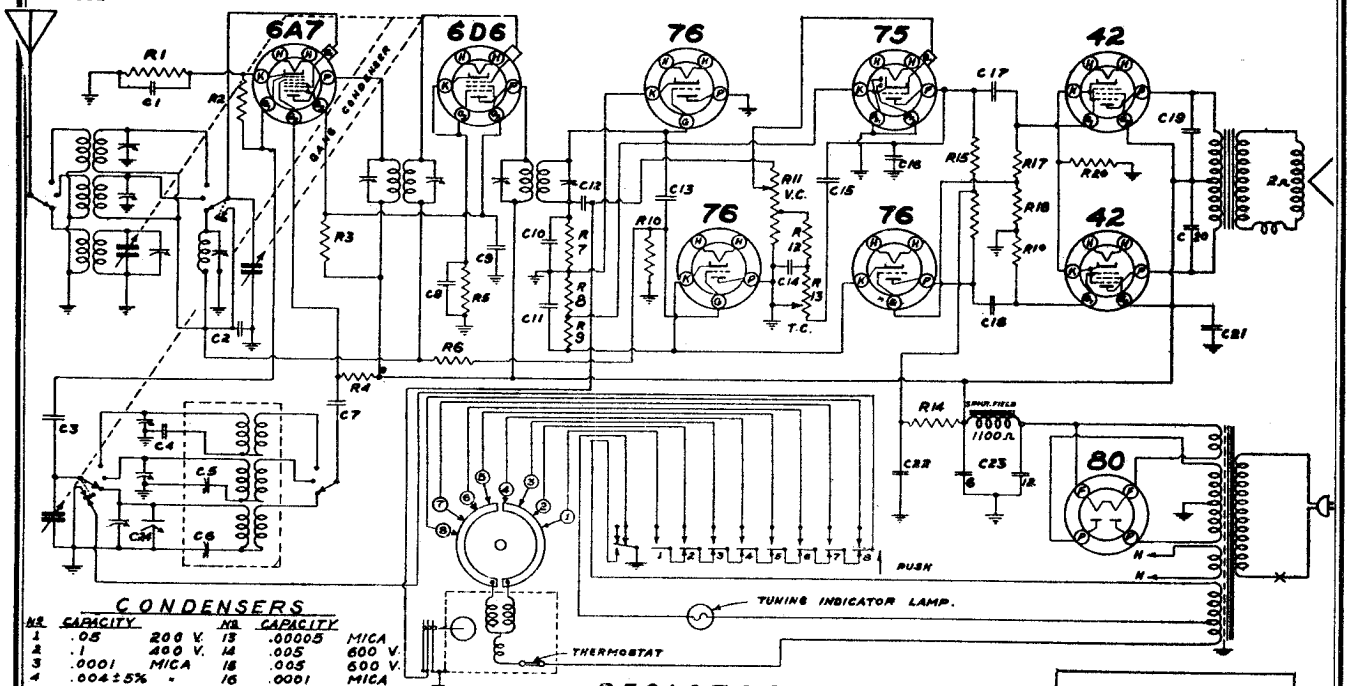

MODEL 9G

CONDENSERS

No.	CAPACITY		No.	CAPACITY	
1	.05	200 V.	13	.00005	MICA
2	.1	400 V.	14	.005	600 V.
3	.0001	MICA	15	.005	600 V.
4	.004±5%	"	16	.0001	MICA
5	.001435	WKG.	17	.01	400 V.
6	.000454	"	18	.01	400 V.
7	.002	400 V.	19	.005	600 V.
8	.05	200 V.	20	.005	600 V.
9	.1	200 V.	21	.25	400 V.
10	.00025	M[illegible]	22	.25	400 V.
11	10.0	[illegible]	23	6.5 12	ELECT.
12	.01	[illegible]	24	COMPENSATOR	

RESISTORS

No.	OHMS	WATTS	No.	OHMS	WATTS	No.	OHMS	WATTS
1	350	1/4	8	750*	1/4	15	200,000	1/4
2	50,000	1/4	9	2 500*	1/4	16	50,000	1/4
3	35,000	1	10	1 MEG.	1/4	17	455,000*	1/4
4	15,000	1	11	1 MEG.	1/4	18	46,000*	1/4
5	350	1/4	12	20,000	1/4	19	500,000	1/4
6	1 MEG	1/4	13	1 MEG.	1/4	20	210	1 1/2
7	500,000	1/4	14	50,000	1/4			

*TOLERANCE TO BE ± 10%

V. C. — VOLUME CONTROL.
T. C. — TONE CONTROL.
SWITCHES IN BROADCAST POSITION

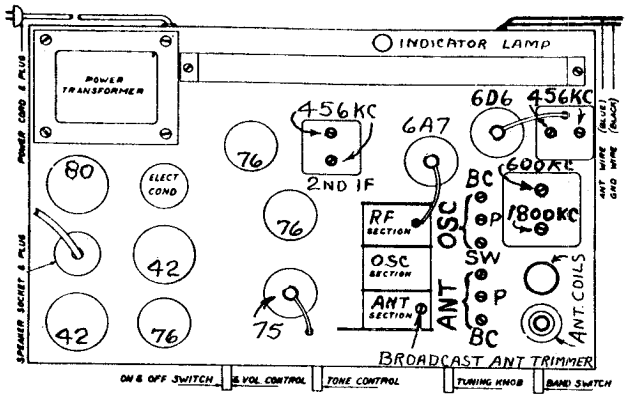

IF PEAK 456 KC

FREQUENCY RANGES :
535 to 1730 KC
1.7 to 5.6 MC
5.6 to 18.1 MC

TUBES

6A7—Converter
6D6—I.F. Amplifier
76—Diode Detector
76—A.V.C.
76—Phase Inverter
75—1st Audio
42—Push-Pull Output
42—Push-Pull Output
80—Rectifier

TEMPERATURE CONTROL This receiver is equipped with a bimetallic temperature controlled capacity unit which automatically corrects any tendency toward oscillator drift, making possible the application of the automatic tuner to this receiver. This unit will be found connected across the oscillator trimming condenser. Anyone servicing this receiver is cautioned against attempting to adjust this unit in any way as the correct adjustment is made at the factory and any further adjustment will result in failure of the unit to operate properly.

IF ALIGNMENT - Generator at 456 KC, connected to control grid of 6A7 thru .05 MFD condenser. Peak four IF transformer trimmers.
BROADCAST BAND - Generator at 1730 KC, connected to antenna thru 200 MMFD condenser, gang condenser at minimum, peak oscillator trimmer. Generator at 1400 KC, locate signal on dial by tuning, peak pre-selector and antenna trimmers. Generator at 600 KC, while rocking variable condenser, peak oscillator padder.
POLICE BAND - Replace 200 MMFD condenser with 400 ohm resistor, generator at 5600 KC, variable condenser at minimum, peak oscillator trimmer. Generator at 4000 KC, locate signal on dial, peak antenna trimmer. Generator and dial at 1800 KC, while rocking variable condenser, peak oscillator padding condenser.
SHORTWAVE BAND - Generator at 18100 KC, variable condenser at minimum, peak oscillator trimmer. Generator at 1600 KC, locate signal on dial, peak the antenna trimmer. Check at 6000 KC, no padding adjustment required.
SEE MODELS 16R and 11S (see index) for PUSH BUTTON TUNER data and adjustments

©John F. Rider, Publisher

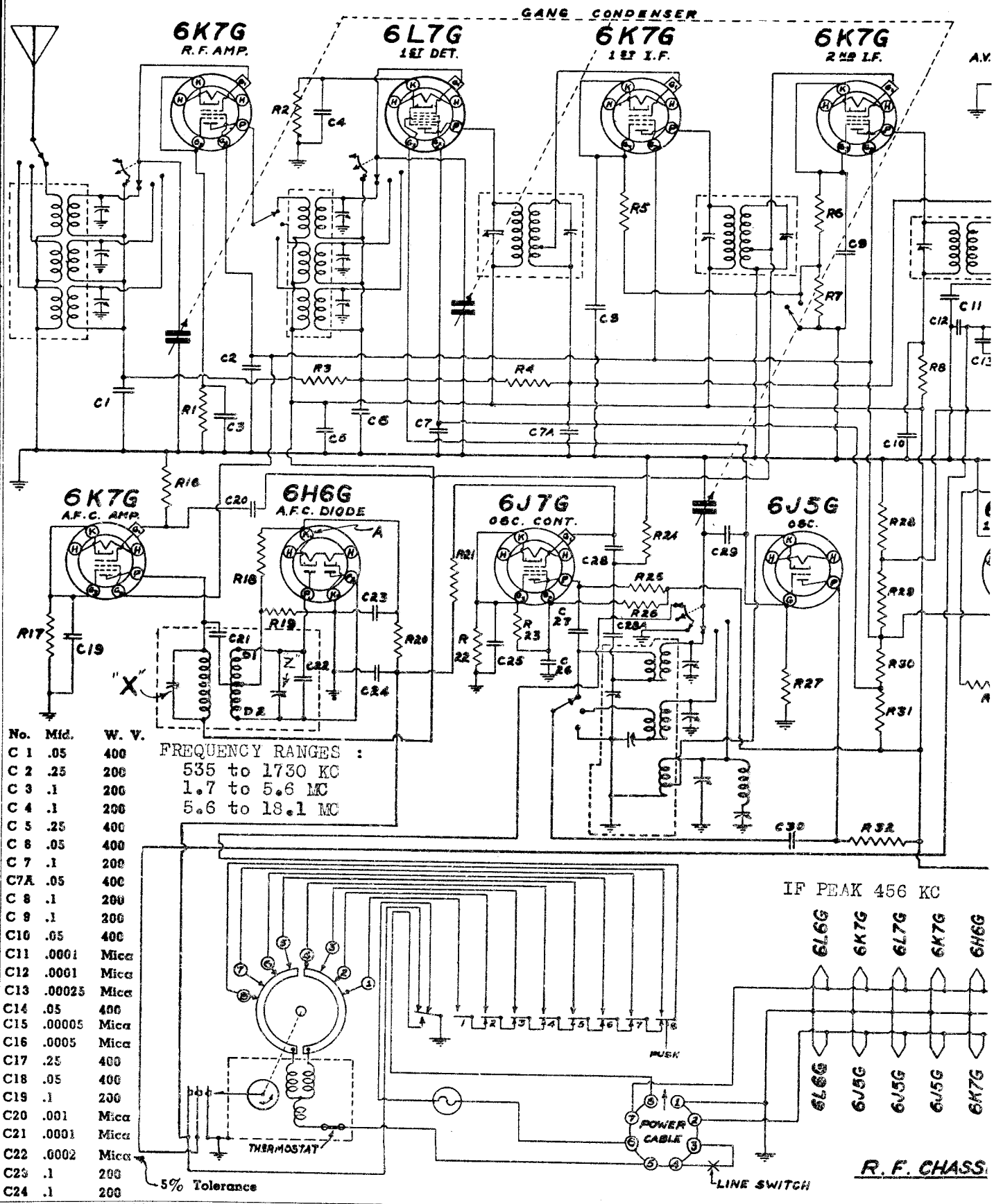

No.	Mfd.	W. V.
C 1	.05	400
C 2	.25	200
C 3	.1	200
C 4	.1	200
C 5	.25	400
C 6	.05	400
C 7	.1	200
C7A	.05	400
C 8	.1	200
C 9	.1	200
C10	.05	400
C11	.0001	Mica
C12	.0001	Mica
C13	.00025	Mica
C14	.05	400
C15	.00005	Mica
C16	.0005	Mica
C17	.25	400
C18	.05	400
C19	.1	200
C20	.001	Mica
C21	.0001	Mica
C22	.0002	Mica
C23	.1	200
C24	.1	200

5% Tolerance

©John F. Rider, Publisher

) & TELEV. CO.

MODEL 16R
Schematic

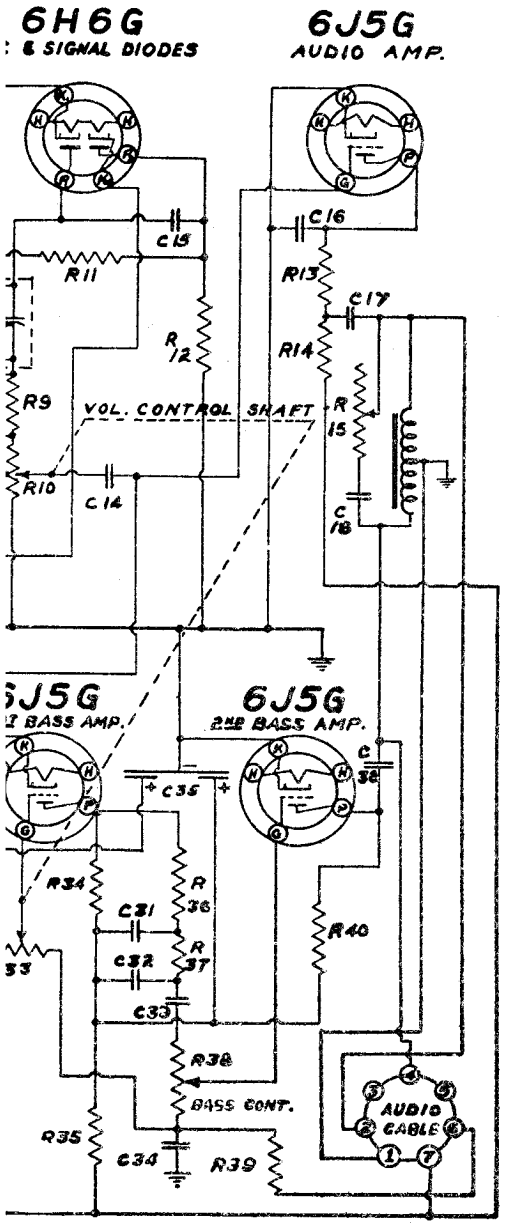

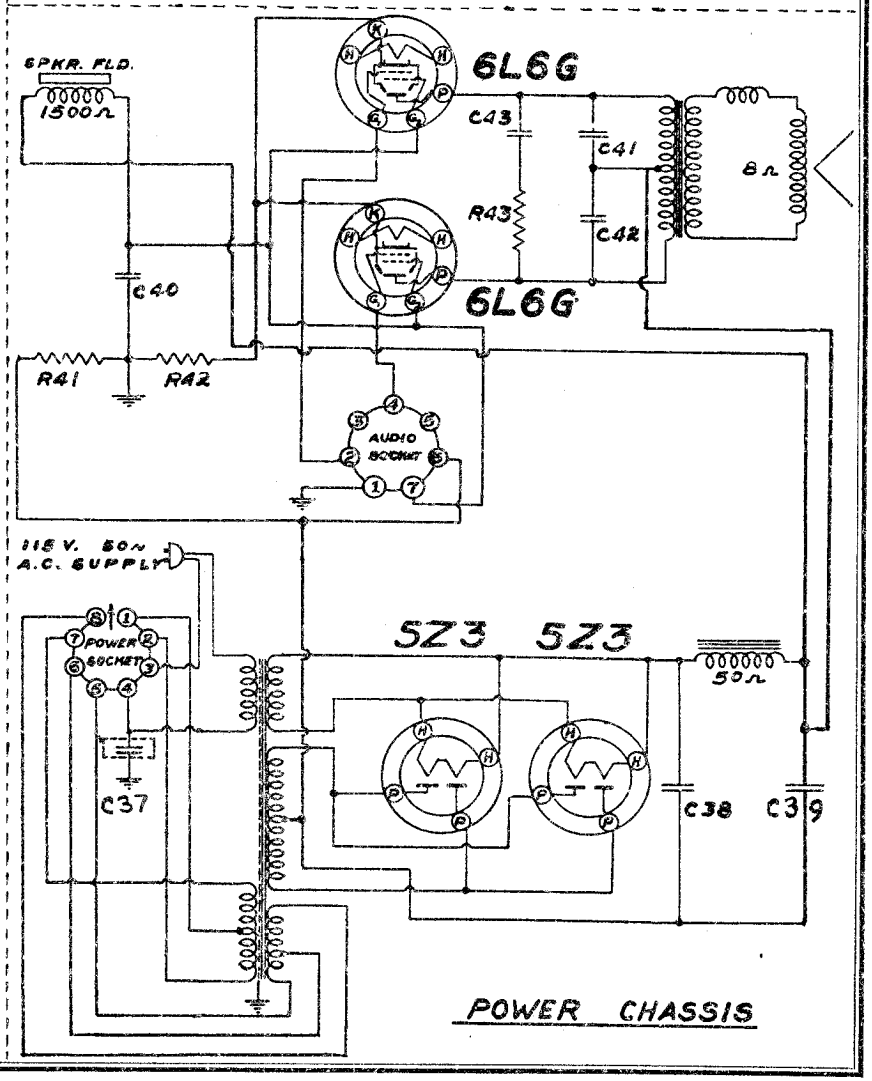

No.	Ohms	Watts	
R 1	750	¼	10% Tolerance
R 2	700	¼	10% Tolerance
R 3	250,000	½	
R 4	250,000	½	
R 5	750	¼	10% Tolerance
R 6	750	¼	10% Tolerance
R 7	600	¼	10% Tolerance
R 8	5,000	½	
R 9	20,000	½	
R10	250,000	Volume Control	
R11	1 Meg.	½	
R12	1 Meg.	½	
R13	7,000	¼	10% Tolerance
R14	25,000	½	
R15	250,000	Tone Control	
R16	2 Meg.	½	
R17	750	¼	10% Tolerance
R18	500,000	½	
R19	500,000	½	
R20	2 Meg.	½	
R21	500,000	½	
R22	1,100	¼	5% Tolerance

No.	Ohms	Watts	
R23	25,000	½	10% Tolerance
R24	350	¼	10% Tolerance
R25	25,000	¼	
R26	35,000	1	
R27	50,000	½	
R28	450	¼	10% Tolerance
R29	2,400		Sections of Met ' Clad Resistor
R30	2,250		
R31	2,260		
R32	25,000	1	
R33	500,000	Bass Control (Section)	
R34	25,000	½	
R35	10,000	½	
R36	10,000	½	
R37	20,000	½	
R38	500,000	Bass Control (Section)	
R39	500,000	Bass Control (Section)	
R40	25,000	Bass Control (Section)	
R41	31		Sections of Metal Clad Resistor
R42	150		
R43	15,000	2	

MODEL 16R

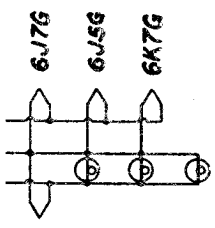

No.	Mid.	W. V.	
C25	.1	200	
C26	.1	200	
C27	.002	600	
C28	.001	Mica	
C29	.0001	Mica	
C30	.002	Mica	
C31	.05	Mica	
C32	.1	400	
C33	.1	400	
C34	.25	200	
C35	4	100	Dry Electrolytic
	4	250	
C36	.25	400	
C37	.02	600	
C38	25.	450	Wet Electrolytic
C39	12.	450	
C40	25.	300	
C41	.002	600	
C42	.002	600	
C43	.01	1000	

MODEL 16R
Socket, Trimmers
Alignment, Tuner

CONTINENTAL

INSTRUCTIONS FOR ADJUSTMENT AND OPERATION OF THE ELECTRIC TUNER

It is very important to read the following instructions carefully before attempting to adjust the electric tuner. The electric tuner is made up of three integral units:

PUSH BUTTON SWITCH The push button switch consists of one (1) white button (extreme left), and eight (8) brown buttons whose numerical sequence is reckoned from left to right. The white button is provided for converting the set from automatic electric push button tuning to manual knob tuning. The brown buttons are provided for automatic electric tuning.

SELECTOR MECHANISM The selector mechanism is made up of the selector plate, eight (8) thumb screws, and the adjustment light bulb.

ELECTRIC MOTOR The power for this tuner is provided by a small, efficient electric motor, of the brushless variety. It is fitted with an automatic clutch and a silent gear train. The bearings and the oil retainer hold sufficient oil to lubricate the motor for a lifetime.

The first step to take in adjusting the electric push button device incorporated into this receiver is to choose eight (8) of the most powerful local stations, stations which are free from excess fading. Turn on the receiver (broadcast band) and press in the white button; tune in the station of the **lowest frequency,** using the station selector knob. Now hold the white button in and press in button number one (1), next to the white button. (See Figure 1). Both buttons are now locked into place; a small pilot lamp located at the rear of the chassis will light up unless the thumb screw at the rear accidently happens to be correctly set. Loosen thumb screw number one (See Figure 2 for order of thumb screws) enough to allow it to slide freely back and forth until the light goes out. Now tighten the thumb screw; the adjustment for the first station is now complete. Out of the station call letter sheet supplied remove the proper station call block and insert into the window directly above button number one (1). Now release button number one (1) by pressing the white button in as far as it will go.

With the white button still in, tune in the station of the next highest frequency and holding the white button, press in button number two (2). Both buttons are now locked into place. Loosen thumb screw number two (see Figure 2) and slide back and forth until a point is reached at which the pilot lamp in the rear goes out; tighten the thumb screw. Insert the proper station call into the window of button number two (2).

Follow this same procedure for the remaining stations, always choosing the station with the next highest frequency. After all eight (8) stations have been adjusted, check each adjustment by tuning in each station. NOTE: In the window above the white button insert the word "OFF" found in the call letter sheet.

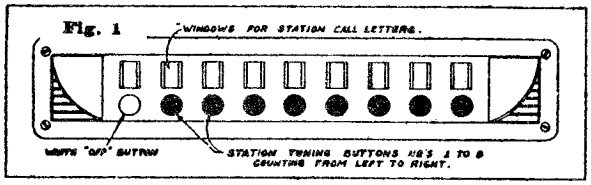

HOW TO TUNE IN STATIONS USING THE ELECTRC PUSH BUTTON TUNER

In order to operate the receiver satisfactorily—using the electric push button tuner, the white button must be in released position, that is, all the way out. To tune in a station, merely press the selector button which designates the station desired. **Note:** Should the station fail to come in clearly, check the adjustment by following the adjustment procedure described in the paragraph above. If by chance all of the buttons are pressed in, they may be released by pressing any one button all the way in.

To change from electric tuning to manual selecting, simply press in the white button. When the white button is in, the set may be tuned as a conventional receiver. **Note:** If it is desired to tune Short Wave or Police while the set is being operated with push buttons, it is not necessary to change over from push button tuning to manual tuning. Simply turn the band switch and proceed to tune with the selector knob. When the band switch is returned to broadcast the station last selected by button will automatically tune in by itself.

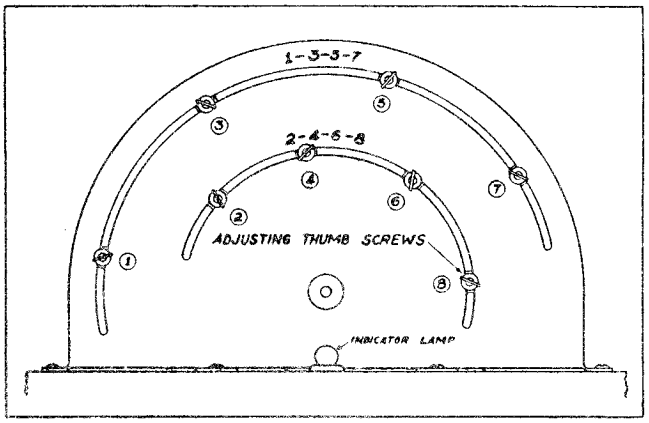

Fig. 2

POWER CHASSIS

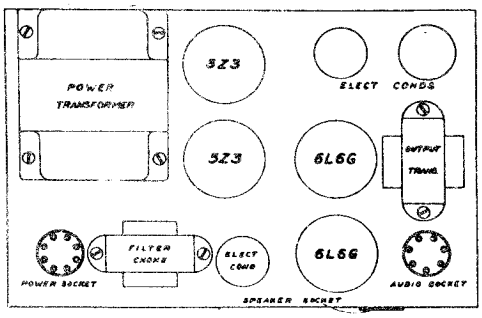

©John F. Rider, Publisher

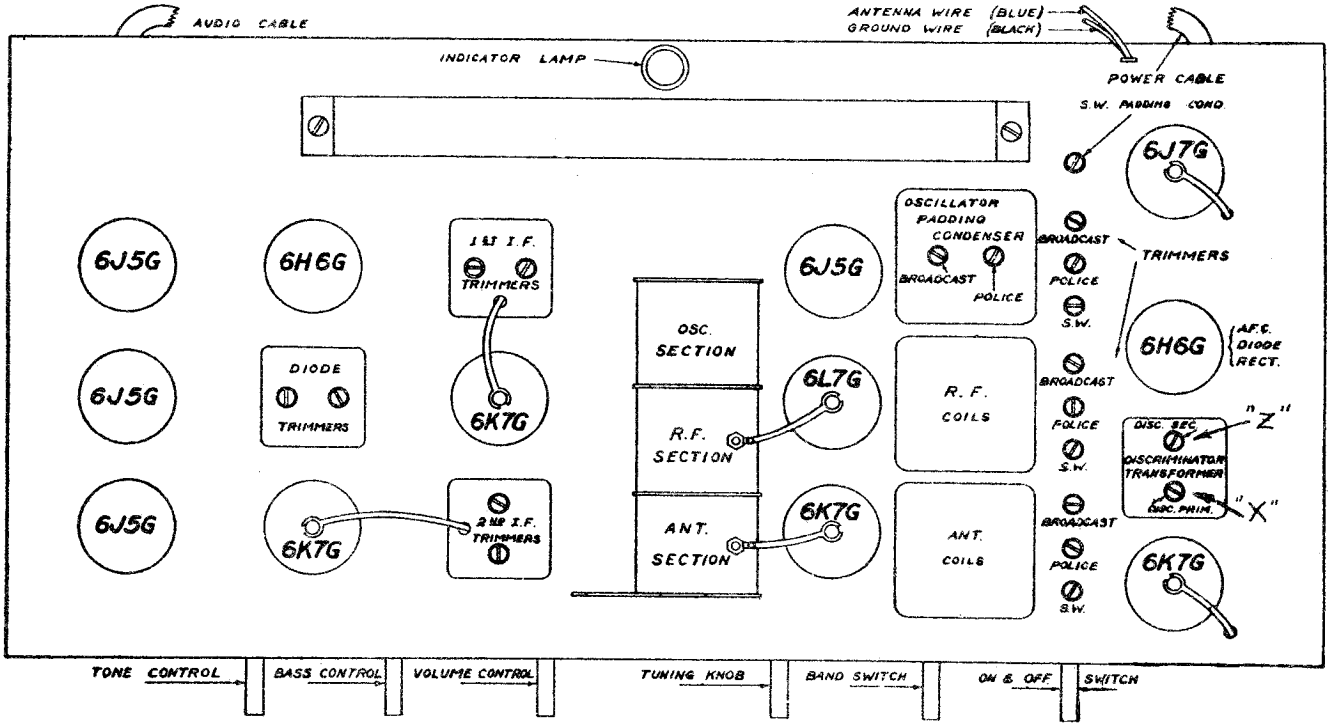

.F. ALIGNMENT - Generator at 456 KC, connected to control grid of 6L7 thru .05 MFD conenser, align 1st, 2nd, and Diode transformer trimmers to peak. Connect a 0-200 microammeter between the ungrounded cathode of the 6H6 AFC diode rectifier, and ground. The athode indicated as point "A" in the schematic. Place a 100 MMFD condenser across the econdary of the discriminator transformer. These terminals are indicated as points "D1" nd "D2" on the schematic. The condenser is used to detune the secondary circuit during he following primary adjustment : The primary is tuned by impressing an IF signal on he signal grid of the 6L7 and adjusting the trimmer marked "X" on the schematic and the hassis layout, to give a maximum meter indication. Signal strength should be approxiately 100000 micro volts for the adjustment. With reduced signal strength repeat the djustments of the entire I.F. system, for maximum sensitivity. The volume control hould be on full for all adjustments. Without disturbing the generator or any of the ther adjustments, the trimmer "Z" ("Disc. Sec.) should be adjusted as follows :Remove he 100 MMFD condenser from across the discriminator secondary, increase the generator ignal to approximately 100,000 micro volts, with volume control turned down to limit udio output, slowly turn the trimmer "Z" until a sudden sharp drop in current occurs he meter will now probably read in reverse and off scale. Reverse trimmer adjustment ringing meter reading to zero. Used only a non-metallic screw driver. It is sometimes convenient to use an offset of "remote zero" setting of the micro ammeter in aking the adjustments so that zero current setting is higher on the scale. After the urrent has been brought to zero by the above described method the I.F. alignment and iscriminator tuning is completed, and R.F. alignment may be accomplished.

ROADCAST BAND - Generator at 1730 KC, connected to the antenna thru a 200 MMFD condnser, variable condenser at minimum, peak oscillator trimmer. Generator at 1400 KC, uning in signal, peak the RF and antenna trimmers. Generator at 600 KC, while rocking ariable condenser, peak the oscillator padding condenser.

OLICE BAND - Generator at 5600 KC, connected to antenna thru 400 Ohm resistor, variable ondenser at minimum, peak oscillator trimmer. Generator at 5000 KC, tune in signal, eak RF and antenna trimmers. Generator at 1800 KC, while rocking variable across ignal, pad the oscillator circuit for maximum response.

HORTWAVE BAND - Generator at 18100 KC, gang condenser at minimum, peak oscillator trimer. Generator at 16000 KC, locate signal on receiver, peak RF and antenna trimmers. enerator at 6000 KC, while rocking variable across signal, peak SW padding condenser.

CONTINENTAL RADIO & TELEV. CO.

MODEL 55
Schematic, Socket
Trimmers, Alignment

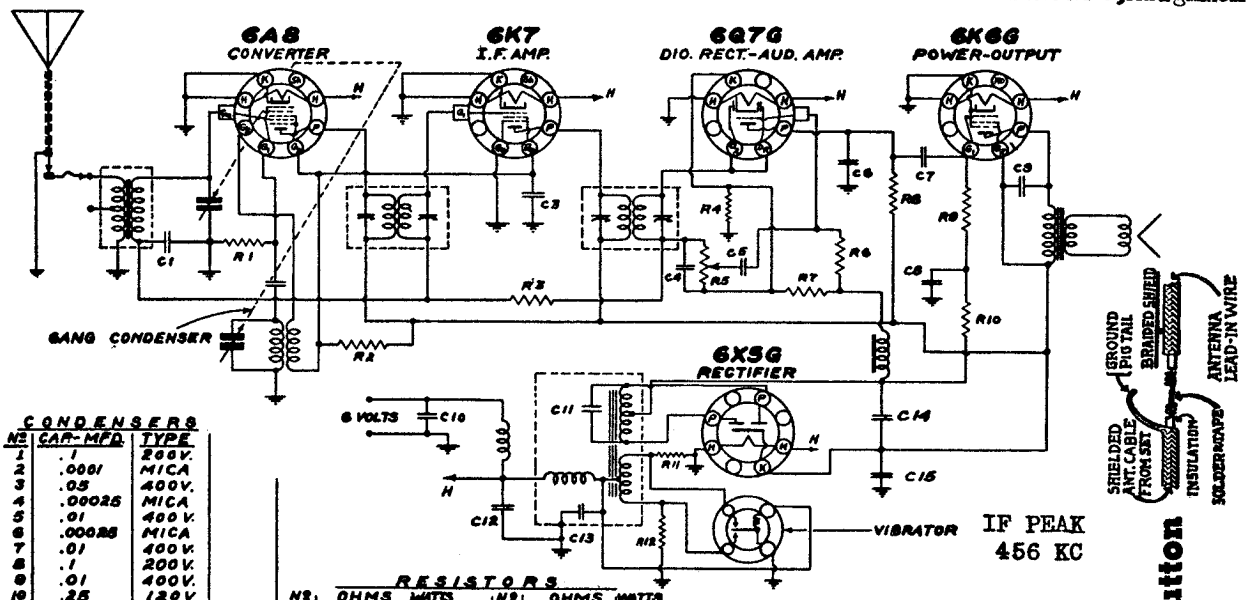

IF PEAK
456 KC

CONDENSERS

No.	CAP. MFD.	TYPE
1	.1	200V.
2	.0001	MICA
3	.05	400V.
4	.00025	MICA
5	.01	400V.
6	.00035	MICA
7	.01	400V.
8	.1	200V.
9	.01	400V.
10	.25	120V.
11	.006	1800V.
12	.5	120V.
13	.5	120V.
14	8. } ELECT	450
15	8.	W.V.

RESISTORS

No.	OHMS	WATTS	No.	OHMS	WATTS
1	50,000	½	7	(W.W.) 40	½
2	15,000	1	8	200,000	¼
3	1,000,000	½	9	500,000	¼
4	(W.W.) 60	½	10	100,000	¼
5	500,000	V.C.	11	100	½
6	2,000,000	¼	12	100	½

SCHEMATIC DIAGRAM
MODEL 55

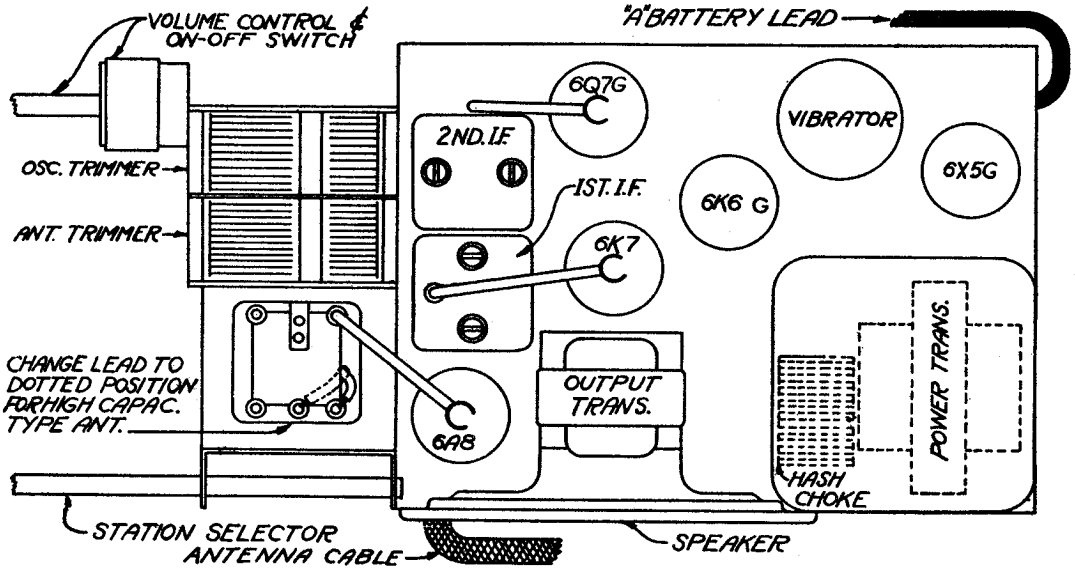

5 Tube Under Dash Automatic Push Button Tuning Automobile Radio

GENERAL DATA. The alignment of this receiver requires the use of a test oscillator that will cover the frequencies of 456, 600, 1400, 1550 and an output meter to be connected across the primary or secondary of the output transformers. If possible, all alignments should be made with the volume control on maximum and the test oscillator output as low as possible, to prevent the AVC from operating and giving false readings.

CORRECT ALIGNMENT PROCEDURE. The intermediate frequency (I.F.) stage should be aligned properly as the first step. After the I.F. transformers have been properly adjusted and peaked, the Broadcast Band alignment should be the next procedure.

I.F. ALIGNMENT. Adjust the test oscillator to 456 KC and connect the output to the grid of the first detector tubes (6A8) through a .05 or .1 mfd. condenser. The ground on the test oscillator can be connected to the chassis ground. Align all four I.F. trimmers to peak or maximum reading on the output meter.

BROADCAST BAND ALIGNMENT. Connect the output of the oscillator to the antenna lead of the receiver through a 50 mmfd. condenser. This antenna lead should be a two foot length of standard low capacity shielded loom fitted with the proper bayonet type plug to accomodate the antenna input receptacle on the receiver. Set the oscillator to 1550 KC and with the gang condenser at minimum, adjust the oscillator trimmer to receive this signal. Then set the oscillator to 1400 KC and adjust the antenna trimmer to give maximum output.

©John F. Rider, Publisher

MODELS 66,660
Schematic,Socket
Trimmers,Alignment

CONTINENTAL RADIO & TELEV. CO.

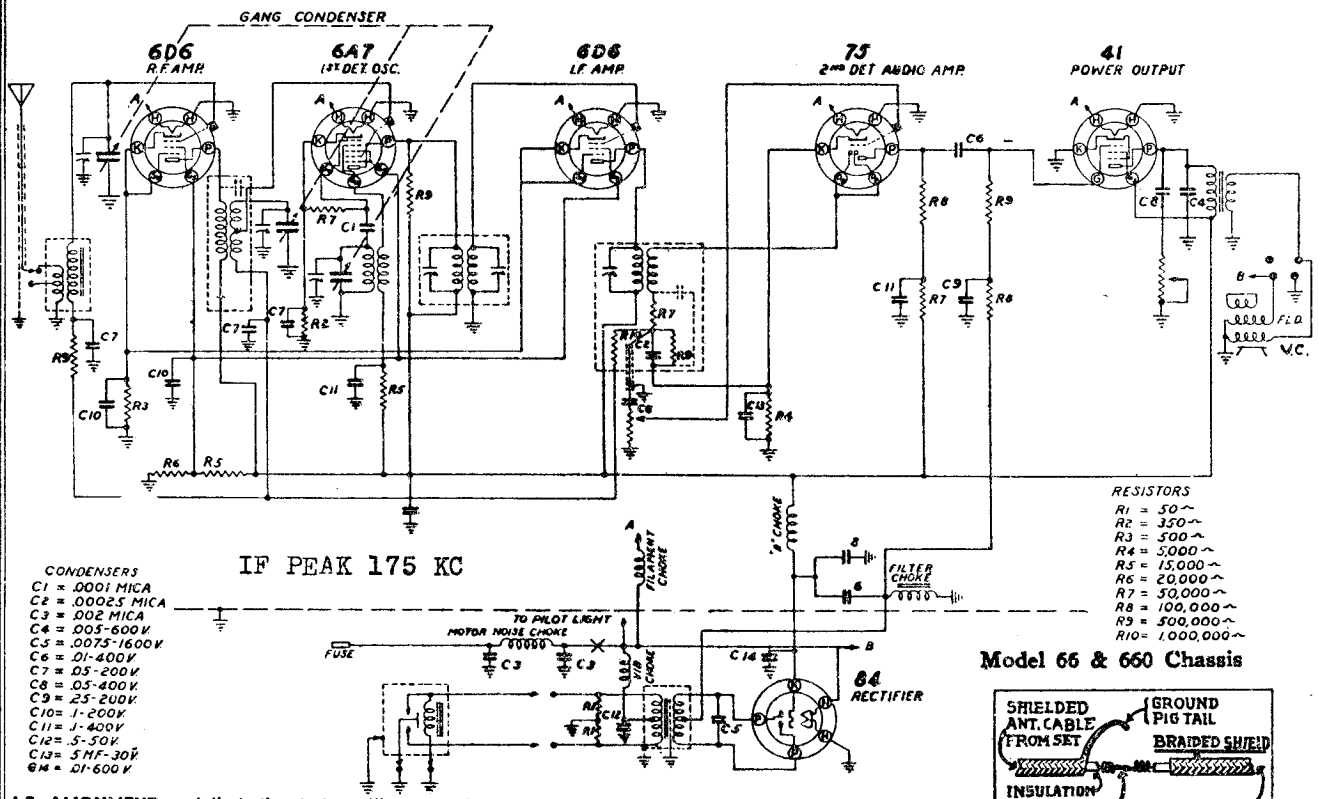

CONDENSERS
C1 = .0001 MICA
C2 = .00025 MICA
C3 = .002 MICA
C4 = .005-600 V.
C5 = .0075-1600 V.
C6 = .01-400 V.
C7 = .05-200 V.
C8 = .05-400 V.
C9 = .25-200 V.
C10 = 1-200 V.
C11 = 1-400 V.
C12 = .5-50 V.
C13 = 5 MF-30 V.
C14 = .01-600 V.

RESISTORS
R1 = 50 Ω
R2 = 350 Ω
R3 = 500 Ω
R4 = 5,000 Ω
R5 = 15,000 Ω
R6 = 20,000 Ω
R7 = 50,000 Ω
R8 = 100,000 Ω
R9 = 500,000 Ω
R10 = 1,000,000 Ω

Model 66 & 660 Chassis

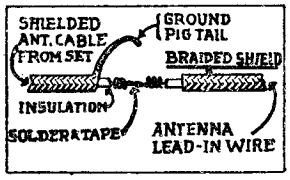

I.F. ALIGNMENT Adjust the test oscillator to 175 K.C. and connect the output directly to the grid of the first detector tube (6A7), without the use of any series condenser or resistor; the omission of series condenser and resistor to block out the AVC action. The ground on the test oscillator can be connected to the chassis ground. Align the trimmers of the first and second I.F. transformers to peak or maximum reading on the output meter.

OSCILLATOR ALIGNMENT Adjust the test oscillator to 1400 K.C. and connect the output to the antenna through a .0001 mfd. mica condenser to give the equivalent of a low capacity type average auto antenna. Set the dial pointer to 1400 K.C. and adjust the oscillator trimmer to peak. (Front section of gang condenser.)

R.F. ALIGNMENT The next step is to adjust the center and rear trimmers of the gang condenser to peak. The center section of the gang condenser tunes the R.F. antenna amplifier stage (6D6 tube), and the rear condenser section tunes the detector grid coil of the 6A7 tube.

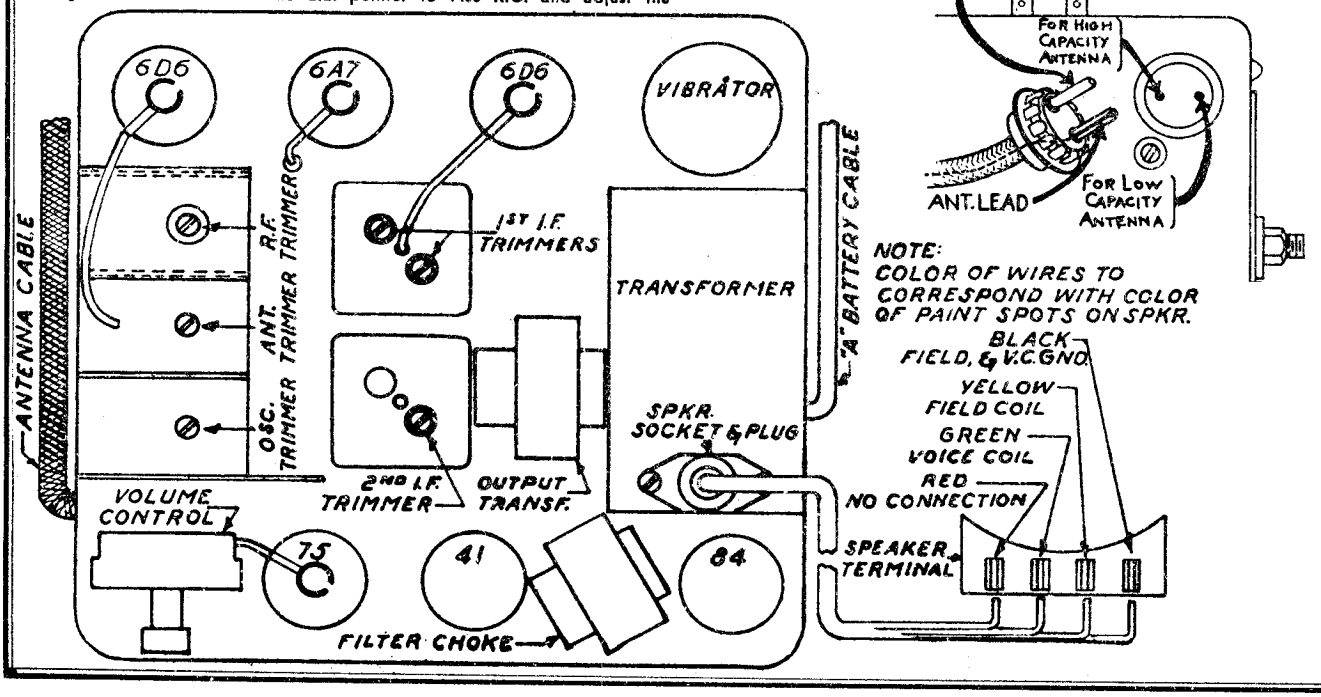

©John F. Rider, Publisher

CONTINENTAL RADIO & TELEV. CO.

MODEL 69
Schematic, Socket
Trimmers, Alignment

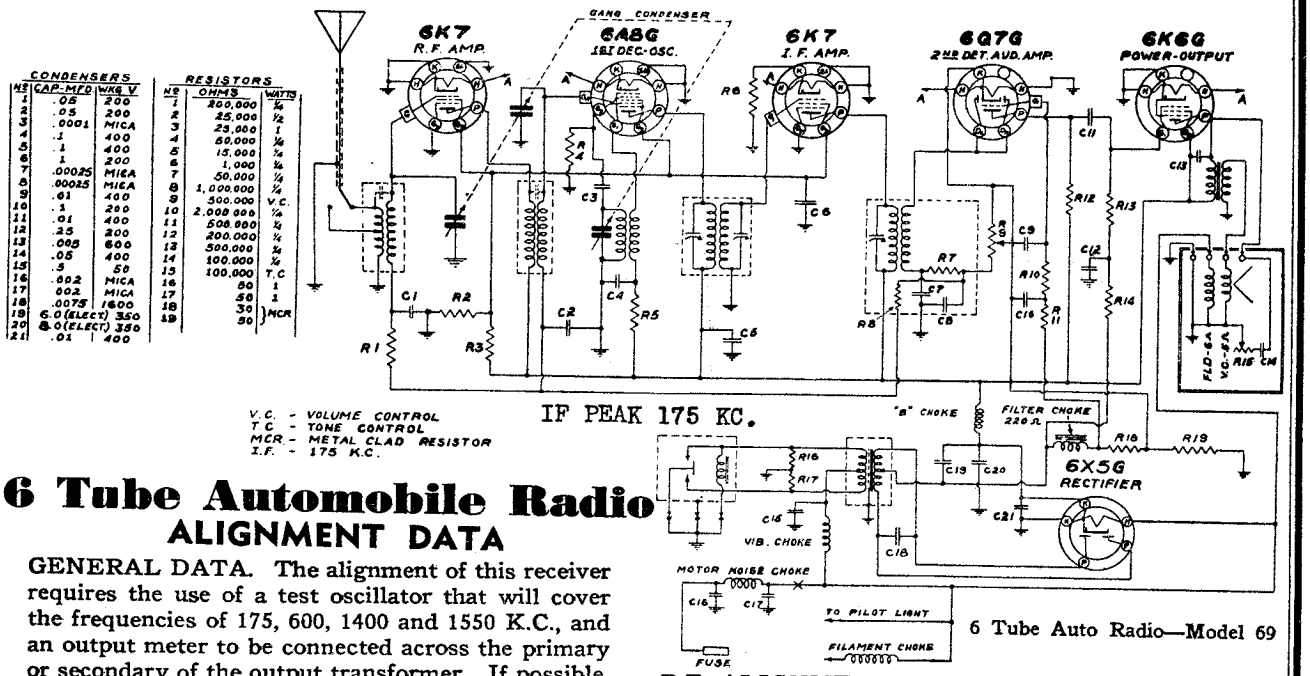

6 Tube Auto Radio—Model 69

6 Tube Automobile Radio

ALIGNMENT DATA

GENERAL DATA. The alignment of this receiver requires the use of a test oscillator that will cover the frequencies of 175, 600, 1400 and 1550 K.C., and an output meter to be connected across the primary or secondary of the output transformer. If possible, all alignment should be made with the volume control on maximum and the test oscillator output as low as possible to prevent the A.V.C. from operating and giving false readings.

CORRECT ALIGNMENT PROCEDURE. The intermediate frequency (I.F.) transformers should be aligned properly as the first step.

I.F. ALIGNMENT. Adjust the test oscillator to 175 K.C. and connect the output to the grid of the first detector tube, 6A8G, through a .1 mfd. condenser. The ground on the test oscillator can be connected to the chassis ground. Align the trimmers of the first and second I.F. transformers to peak or maximum reading on the output meter.

R.F. ALIGNMENT. Adjust the test oscillator to 1550 K.C. and connect the output to the antenna through a .00005 mfd. mica condenser to give the equivalent of a low capacity average auto antenna. When this adjustment is made, the signal must be introduced into the receiver through the shielded lead supplied with the receiver. The plug should be inserted to conform with the "Low Capacity" position. (See Figure 18). Set the gang condenser to minimum and adjust the ascillator trimmer to peak. (Center section of gang condenser). The next step is to set the test oscillator and receiver to 1400 K.C. and adjust the front and rear trimmers of the gang condenser to peak. The rear section of the gang condenser tunes the antenna amplifier stage (6K7 tube), and the front condenser section tunes the detector grid coil of the 6A8G tube.

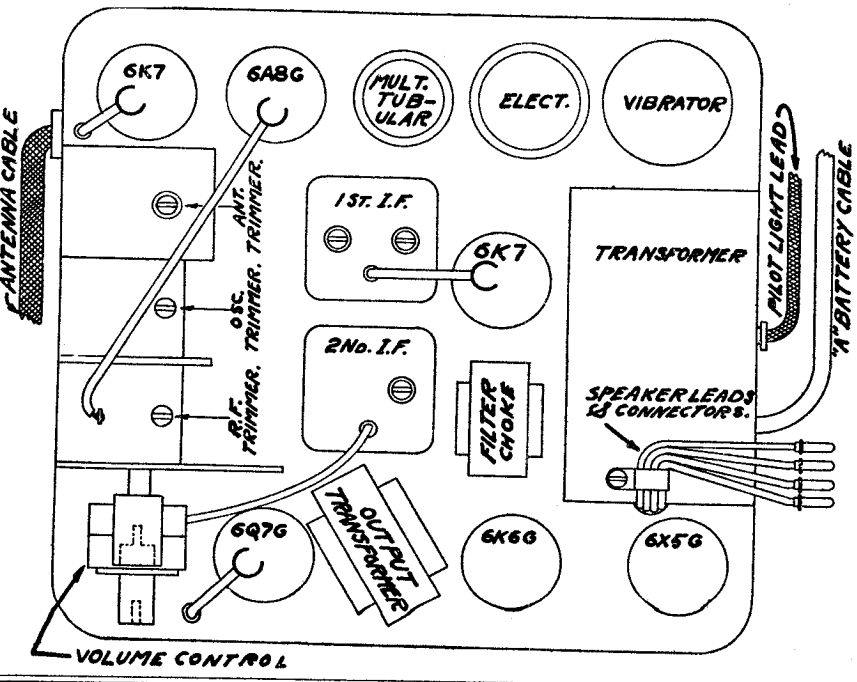

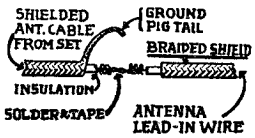

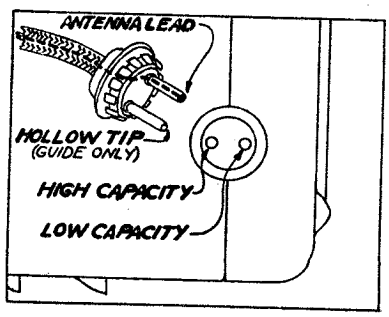

©John F. Rider, Publisher

MODELS 88,880
Schematic,Socket
Trimmers,Alignment.

CONTINENTAL RADIO & TELEV. CO.

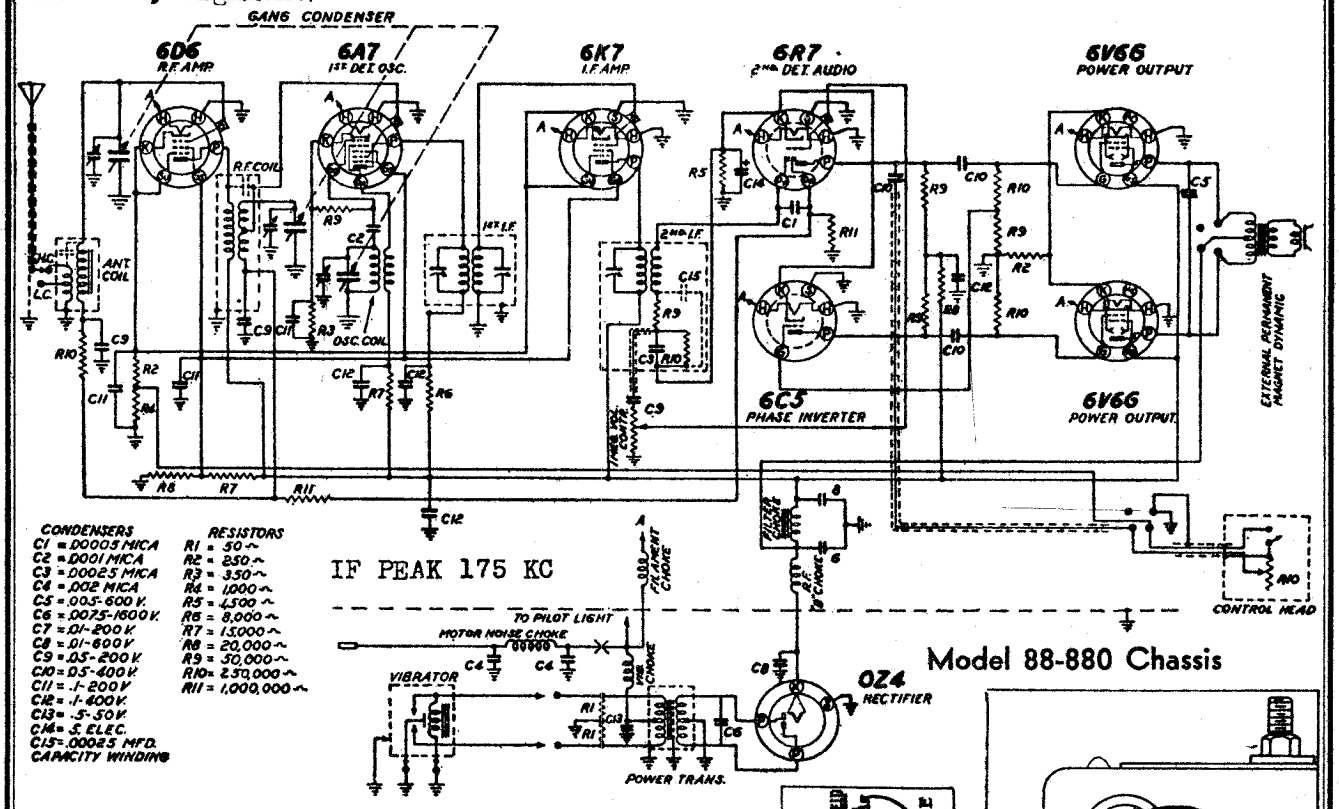

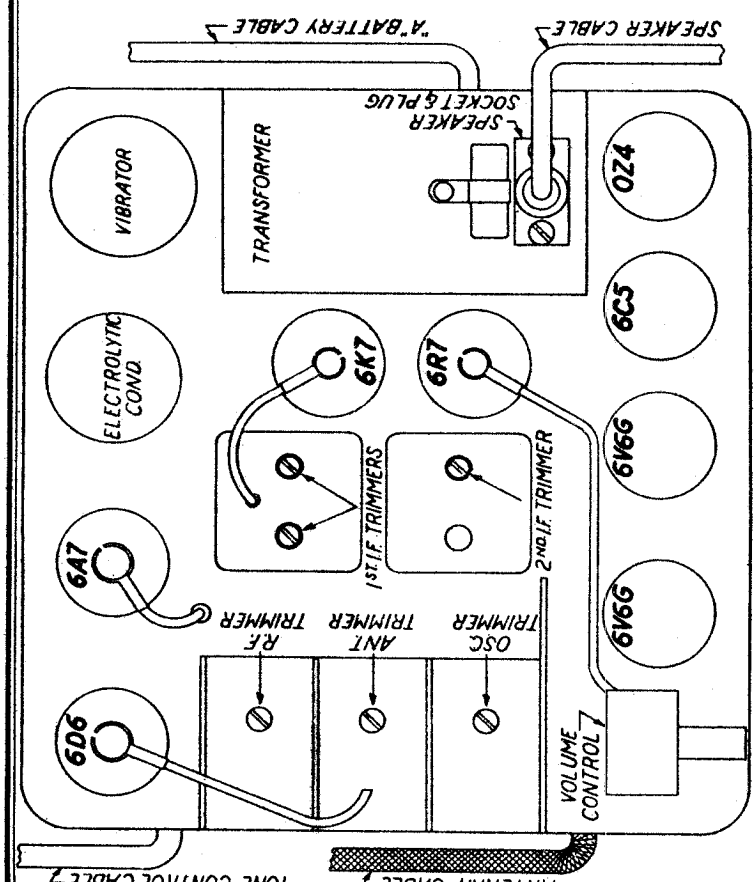

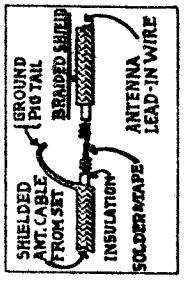

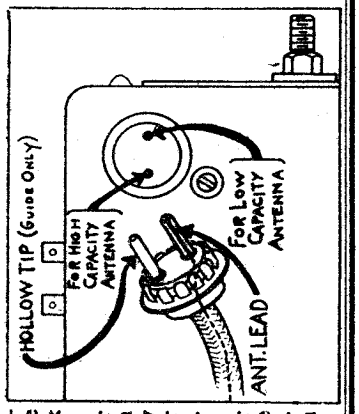

ALIGNMENT DATA

I.F. ALIGNMENT. Adjust the test oscillator to 175 K.C. and connect the output directly to the grid of the first detector tube (6A7), without the use of any series condenser or resistor; the omission of series condenser and resistor to block out the AVC action. The ground on the test oscillator can be connected to the chassis ground. Align the trimmers of the first and second I.F. transformers to peak or maximum reading on the output meter.

OSCILLATOR ALIGNMENT. Adjust the test oscillator to 1400 K.C. and connect the output to the antenna through a .0001 mfd. mica condenser to give the equivalent of a low capacity type average auto antenna. Set the dial pointer to 1400 K.C. and adjust the oscillator trimmer to peak. (Front section of gang condenser.)

R.F. ALIGNMENT. The next step is to adjust the center and rear trimmers of the gang condenser to peak. The center section of the gang condenser tunes the antenna amplifier stage (6D6 tube), and the rear condenser section tunes the detector grid coil of the 6A7 tube.

©John F. Rider, Publisher

CORONA RADIO & TELEV. CORP.

MODEL 108
Schematic
Alignment

ALIGNMENT PROCEDURE

First, adj. IF transf. to 456 KC by feeding the signal thru the control grid of the 6A7 tube. Adj. the short wave band next;- set pointer at 6 MC & adj. osc. trimmer, located under chassis near filter conds. carefully to the fundamental rather than image(fund. is second peak as you adj. from max. cap.); then adj. the short wave ant. trimmer, located on top of chassis near var. cond., for max. signal: next dial across short wave band checking it at 2.5 and 4 MC to see that it does not stop oscillating. If this should occur, try changing 6A7 tubes to find one that will oscillate at 2.2 MC. If you experience any difficulty in finding a satisfactory tube, it may be necessary to use separate bias on 6A7(200 ohm res. and .1/4 mfd cond.) in order to use the tubes available.

Now, set band switch to broadcast position and adj. padder at about 600 Kc for max. gain, rocking the var. cond. with each adj. of the padder - then with gang all the way open, adj. B.C. osc. trimmer located under chassis near outer edge, to 1717 KC and set B.C. ant. trimmer located on top of chassis near outer edge, for maximum gain.

DO NOT CONNECT A GROUND TO THIS SET.

This set is designed to operate on 105-125 volts AC-DC

©John F. Rider, Publisher

MODEL 203
Schematic

CORONA RADIO & TELEV. CORP.

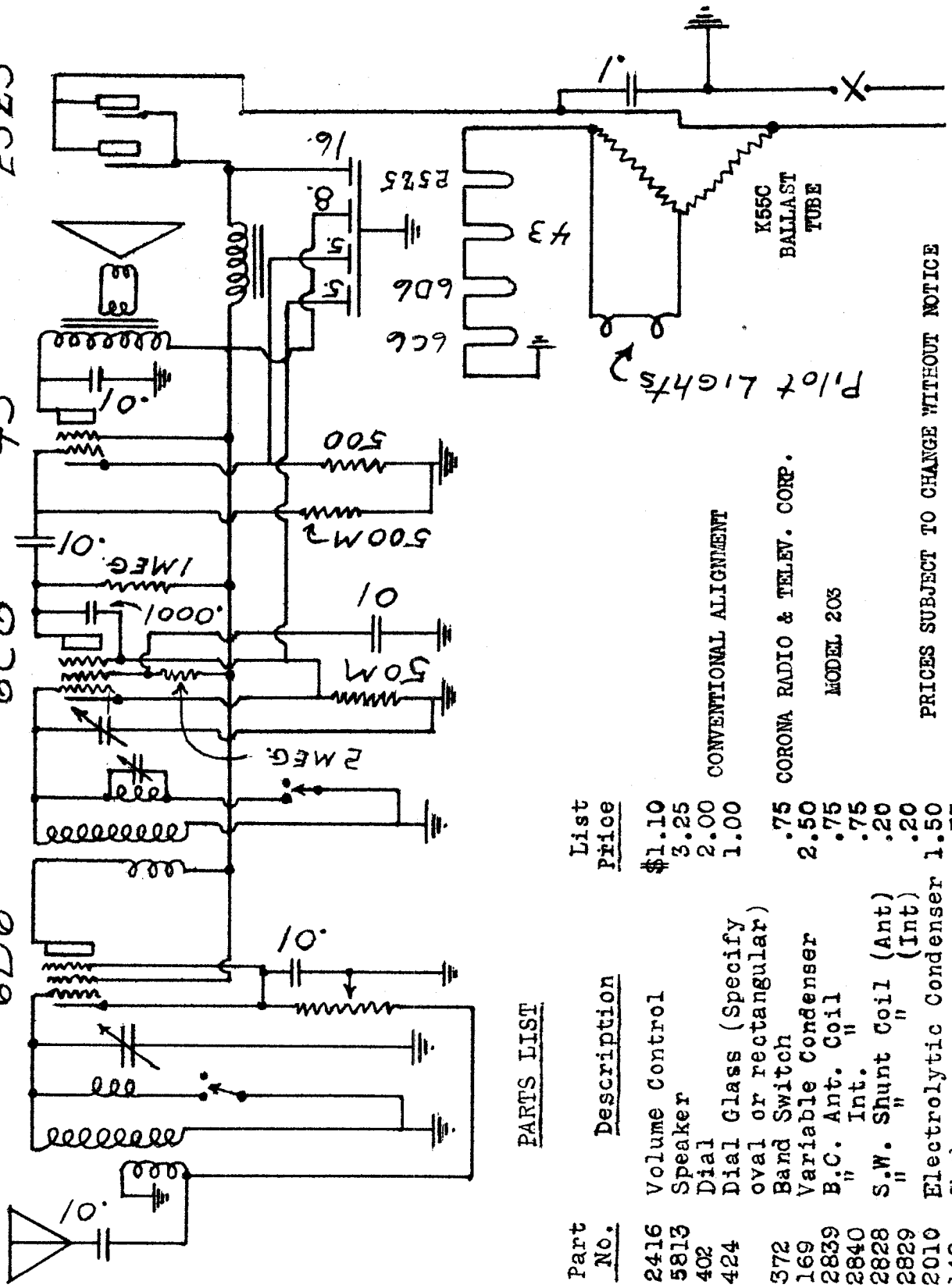

PARTS LIST

Part No.	Description	List Price
2416	Volume Control	$1.10
5813	Speaker	3.25
402	Dial	2.00
424	Dial Glass (Specify oval or rectangular)	1.00
372	Band Switch	.75
169	Variable Condenser	2.50
2839	B.C. Ant. Coil	.75
2840	" Int. "	.75
2828	S.W. Shunt Coil (Ant)	.20
2829	" " (Int)	.20
2010	Electrolytic Condenser	1.50
142	Choke	.75

CONVENTIONAL ALIGNMENT

CORONA RADIO & TELEV. CORP.

MODEL 203

PRICES SUBJECT TO CHANGE WITHOUT NOTICE

©John F. Rider, Publisher

MODEL 209
Schematic
Parts

CORONA RADIO & TELEV. CORP.

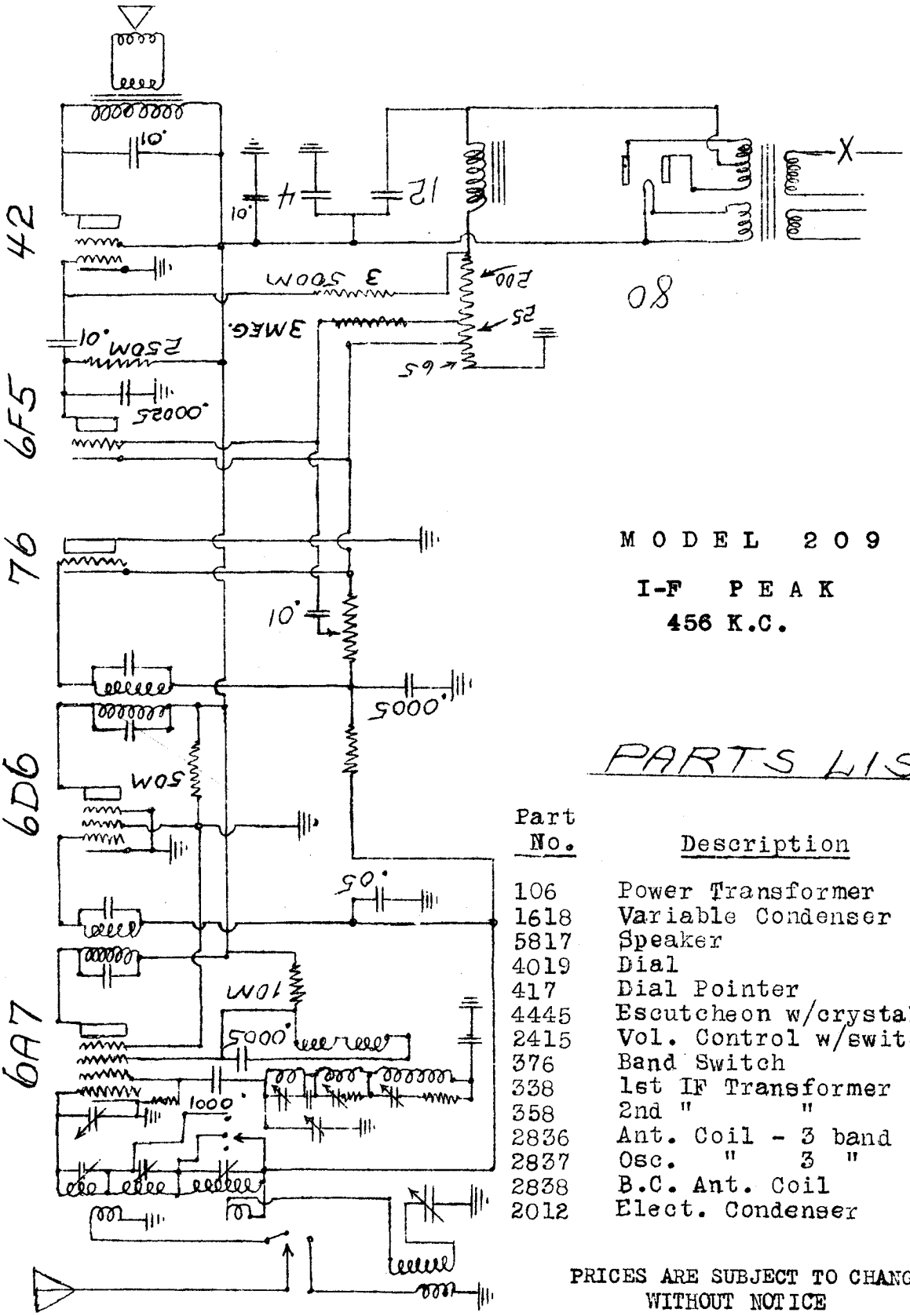

MODEL 209

I-F PEAK
456 K.C.

PARTS LIST

Part No.	Description	List Price
106	Power Transformer	$3.00
1618	Variable Condenser	3.25
5817	Speaker	3.25
4019	Dial	4.60
417	Dial Pointer	.60
4445	Escutcheon w/crystal	1.50
2415	Vol. Control w/switch	1.10
376	Band Switch	.90
338	1st IF Transformer	1.50
358	2nd " "	1.50
2836	Ant. Coil - 3 band	1.85
2837	Osc. " 3 "	1.85
2838	B.C. Ant. Coil	.60
2012	Elect. Condenser	1.50

PRICES ARE SUBJECT TO CHANGE
WITHOUT NOTICE

©John F. Rider, Publisher

MODEL 210
Schematic, Parts

CORONA RADIO & TELEV. CORP.

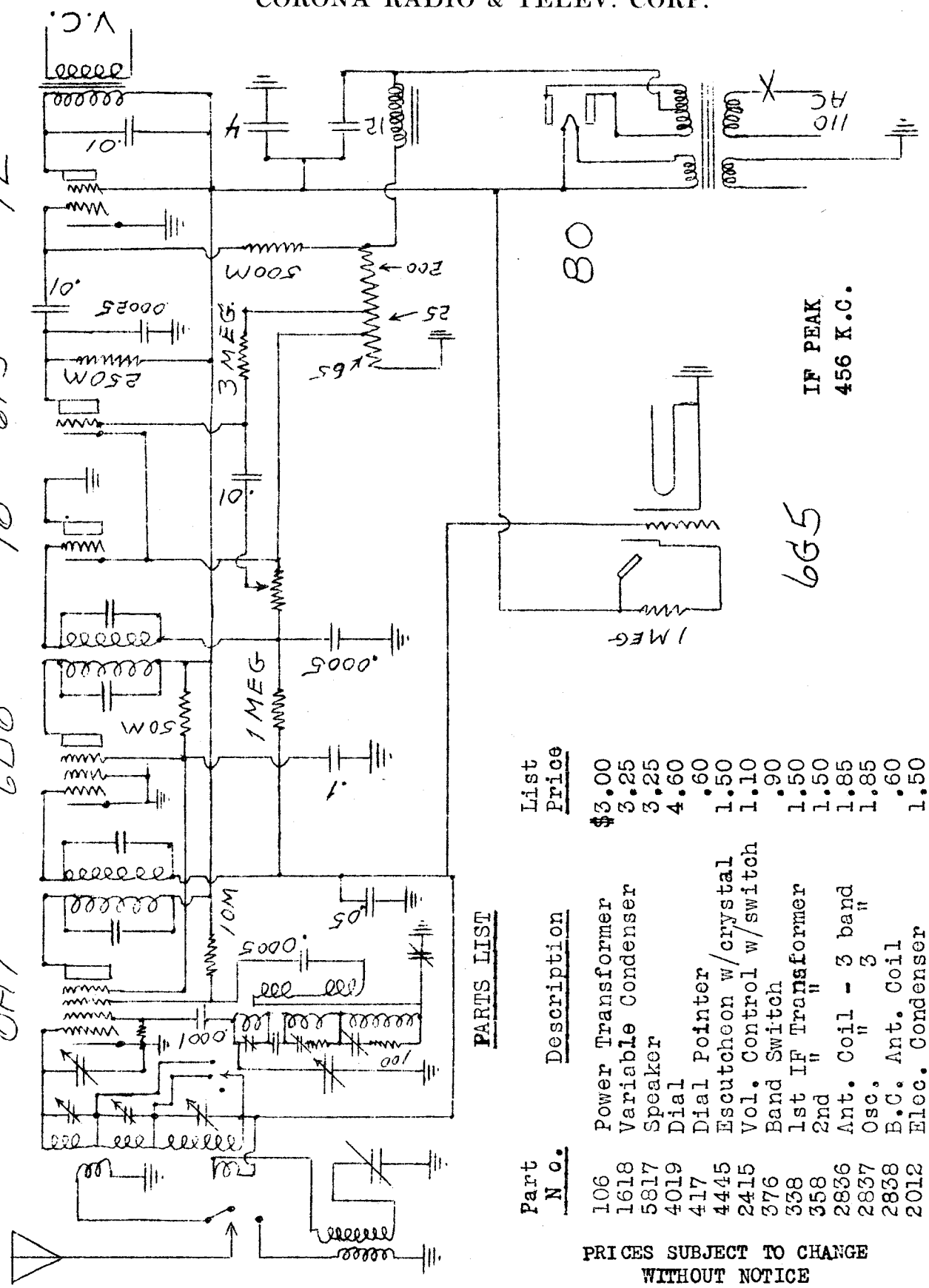

PARTS LIST

Part No.	Description	List Price
106	Power Transformer	$3.00
1618	Variable Condenser	3.25
5817	Speaker	3.25
4019	Dial	4.60
417	Dial Pointer	.60
4445	Escutcheon w/crystal	1.50
2415	Vol. Control w/switch	1.10
376	Band Switch	.90
338	1st IF Transformer	1.50
358	2nd " "	1.50
2836	Ant. Coil - 3 band	1.85
2837	Osc. " 3 "	1.85
2838	B.C. Ant. Coil	.60
2012	Elec. Condenser	1.50

PRICES SUBJECT TO CHANGE WITHOUT NOTICE

©John F. Rider, Publisher

MODELS A158, A258
Schematic, Socket
Layout, Trimmers
Voltage

CROSLEY RADIO CORP.

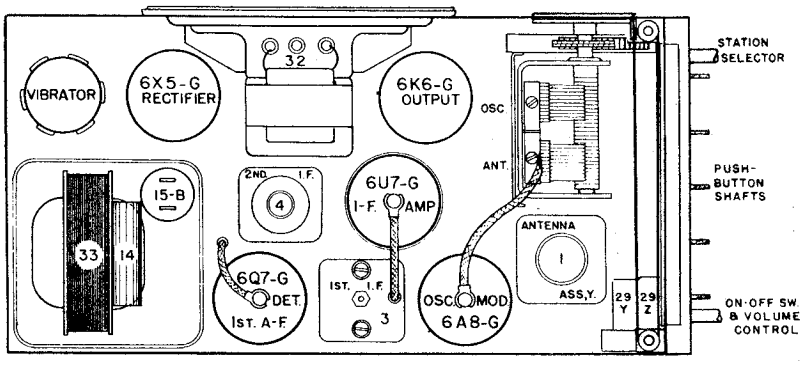

Fig. 2. Top View A-258

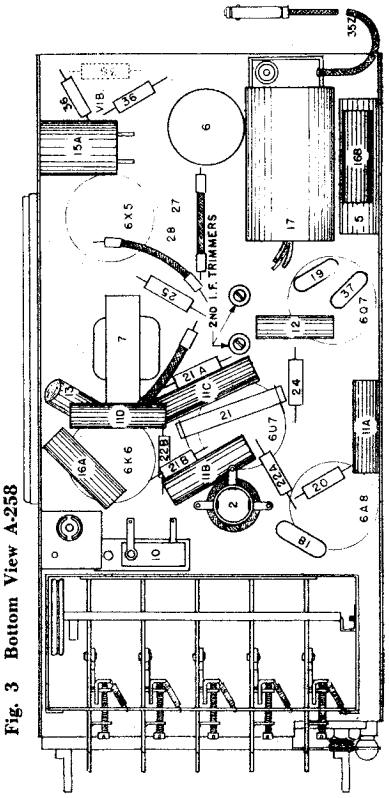

Fig. 3 Bottom View A-258

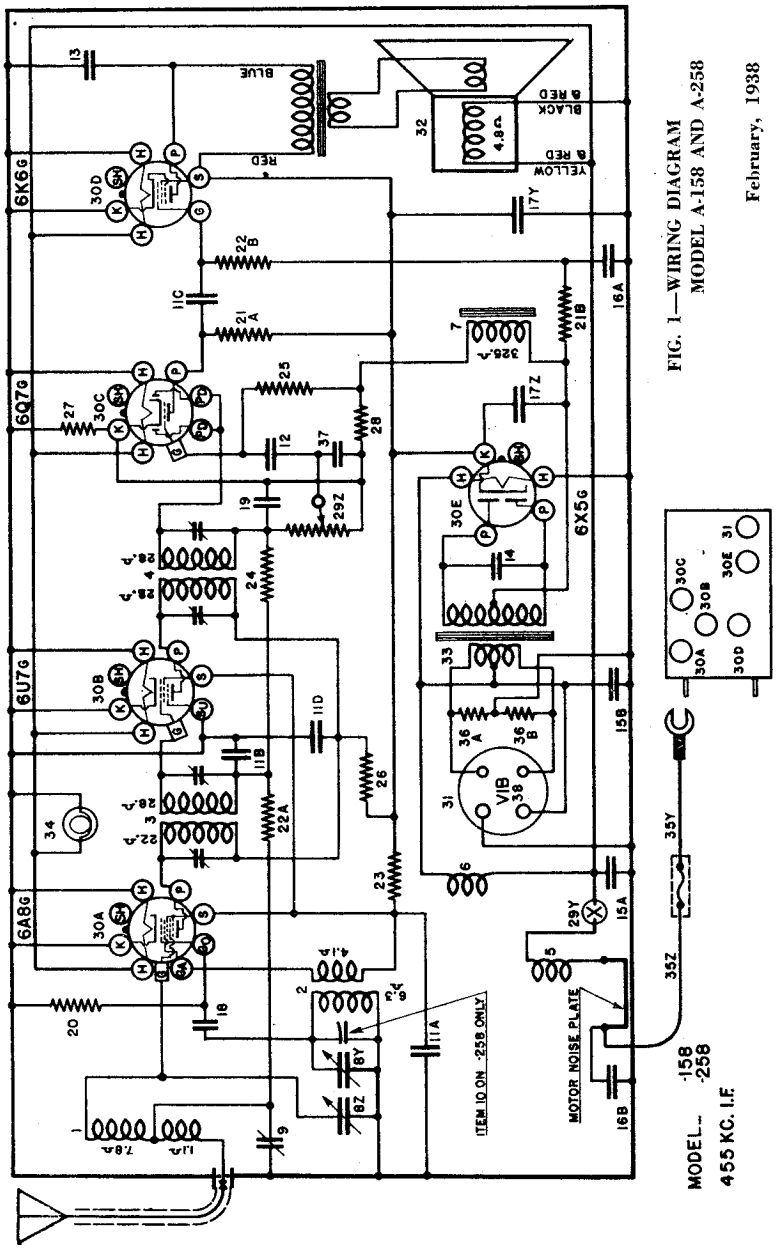

FIG. 1—WIRING DIAGRAM
MODEL A-158 AND A-258
February, 1938

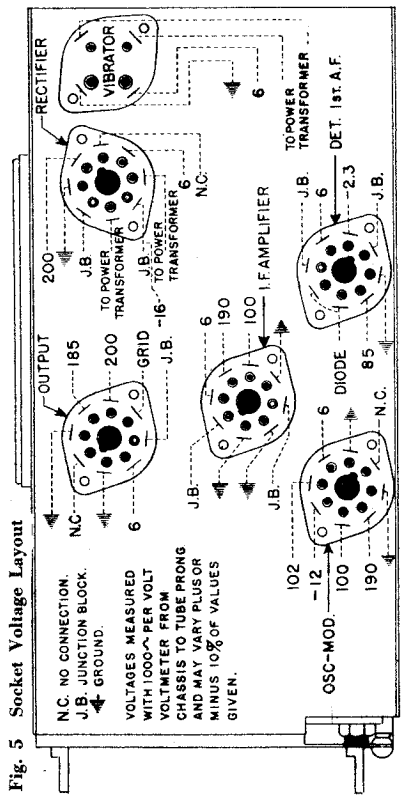

Fig. 5 Socket Voltage Layout

©John F. Rider, Publisher

©John F. Rider, Publisher

SPECIFICATIONS

This model Crosley Roamio is a single unit five-tube superheterodyne receiver. It incorporates an unusual push button tuning system of rugged mechanical design that is positive, accurate, and easy to adjust and operate. A highly efficient superheterodyne circuit employs five tubes to the utmost advantage as follows: one 6A8G as an oscillator and mixer or modulator. one 6U7G as an intermediate frequency amplifier, one 6Q7G as detector, A. V. C. and 1st A. F. amplifier, one 6K6G as power output amplifier and a 6X5G as a rectifier. A full wave vibrator is used. Bias for the 6A8G and 6U7G tubes is obtained across item 27 (60 ohm resistor), for the 6Q7G tube across item 28 (40 ohm resistor) and for the 6K6G across the "B" Filter choke, item 7, and items 27 and 28.

TUBES AND VOLTAGE LIMITS

The following table gives the functions of the tubes used, together with the voltage readings between the tube socket contacts and the receiver chassis. Voltage readings taken with a 1000 ohm per volt, 500 volt voltmeter (except filaments) with receiver in operating condition and no signal input. The filament voltages should be measured with an accurate low range D-C voltmeter (approximately 0 to 10 volts). Voltage limits may vary plus or minus 10% of values given.

SOCKET VOLTAGE LAYOUT

The socket layout in the illustration Fig. 5, shows the voltage readings taken between the tube prongs and receiver chassis. It will be noted that certain unused terminals are used as junction blocks while others are not used at all. All readings are taken with the receiver in operating condition and no signal input.

SETTING PUSH BUTTONS

Should it become necessary to realign the circuits of the receiver, it may also be necessary to reset the push buttons. The push buttons may be quickly and accurately set, either with the receiver in the case or with the case removed.

Insert a small screw driver in the hole through each push button and loosen (do not remove) the set screw in the bottom of the hole. By means of the conventional tuning knob, tune-in AS ACCURATELY AS POSSIBLE the favorite station having the highest frequency —that is, the station nearest the left-hand end of the dial. Completely depress and hold the No. 1 push button on the left and tighten the set screw SECURELY.

The push button tuning system is now correctly set for the 1st station. Follow through with this same procedure, setting the other four stations in the order of their frequency (kilocycles).

ALIGNMENT PROCEDURE

All the circuits in this receiver are very accurately adjusted at the factory and normally should need no further adjustment. However, if it is definitely known that an adjustment is necessary the circuits can best be properly aligned with the use of a modulated signal generator and an output meter.

CONNECTING OUTPUT METER

Connect the output meter to P and S of the 6K6G Output tube. Be sure the meter is protected from D.C. by connecting a condenser (.1 mfd. or larger—not electrolytic) in series with one of the leads.

1. Tuning I-F Amplifier To 455 Kilocycles.

(a) Connect the output of the signal generator through a .02 mfd., or larger, condenser to the top cap of the 6U7G I. F. tube, leaving the tube's grid clip in place. Connect the ground lead from the signal generator to the receiver chassis frame. KEEP THE GENERATOR LEADS AS FAR AS POSSIBLE FROM THE GRID LEADS OF THE OTHER SCREEN GRID TUBES.

(b) Adjust the station selector so that the rotor plates of the tuning condenser are completely disengaged and turn Vol. Cont. to maximum position (RIGHT).

(c) Set the signal generator to 455 kilocycles.

(d) Adjust both 2nd I. F. trimmer condensers for maximum output. Fig. 3.

(e) Transfer generator lead to top of 6A8G Osc.-Mod. tube, leaving the tube's grid clip in place.

(f) Adjust both trimmers located on the 1st I-F transformer for maximum output.

(g) Repeat operations (d) and (f) for more accurate adjustments.

IN ORDER TO PREVENT A. V. C. ACTION ALWAYS USE THE LOWEST SIGNAL GENERATOR OUTPUT THAT WILL GIVE A REASONABLE OUTPUT METER READING.

2. Aligning R-F Amplifier.

To obtain the greatest gain from the R. F. amplifier, the capacity of the dummy antenna should be equal to the capacity of the antenna with which the receiver is to be used. The capacities of auto radio antennas range from 65 mmf. (.000065 mf.) to 250 mmf. (.00025 mf.), depending upon the size and type. If the receiver is adjusted for maximum efficiency when used with an antenna havinig a high capacity, it will not operate at its maximum efficiency on an antenna having a much lower capacity and vice versa.

(a) If the receiver is to be used with a whip or streamlined antenna, the output lead from the signal generator should be connected through a .0001 mf. condenser to the "Ant" connection of the receiver. If a large antenna such as a running board type or built-in top antenna is to be used, a .0002 mf. condenser should be used in place of the .0001 mf. condenser.

(b) Set the signal generator to 1400 kilocycles.

(c) Adjust the station selector to 140 on the dial.

(d) Adjust the trimmer on the "OSC" section of the tuning condenser for maximum output.

(e) Adjust the trimmer on the "ANT" section of the tuning condenser for maximum output.

(f) Readjust the station selector for maximum output. DO NOT READJUST THE OSC. TRIMMER.

(g) Repeat operation (e) for more accurate adjustment.

3. Adjusting Antenna Compensating Condenser.

(a) Set the signal generator to 600 kilocycles.

(b) Tune in the 600 kilocycle signal with the station selector for maximum output.

(c) Adjust the antenna compensating condenser, located between the control knobs on the front of the chassis, for maxiumum output.

(d) Repeat operations (b) and (c) alternately until no further improvement can be obtained.

(e) Set the signal generator to 1400 kilocycles again.

(f) Tune-in the 1400 kilocycle signal with the station selector for maximum output.

(g) Readjust the trimmer on the "Ant" section of the tuning condenser for maximum output.

It will be necessary to adjust the antenna compensating condenser to the car antenna after the receiver has been installed in the car.

(a) After the installation is complete, tune-in a WEAK station between 55 and 65 on the dial.

(b) Adjust the antenna compensating condenser for maximum volume in the speaker.

REPLACING DIAL DRIVE CORDS

Two dial drive cords are used and should the innermost cord break, it will be necessary to remove the outer cord and large pulley before the inner cord can be replaced.

To replace the inner cord:

(1) After removing the broken cord, place the chassis on end with the push buttons "up" and the speaker toward you.

(2) Thread an 18" length of drive cord through the hook on one end of the tension spring which was removed from the pulley on the end of the push button rocker plate.

(3) Insert both ends of this cord through the eyelet in the rocker plate pulley from the inside. Pull the cord through until the tension spring is pulled into the pulley, then hook the free end of the spring over the catch in the pulley in the side opposite the eyelet.

(4) Open the condenser gang all the way.

(5) Pull all but approximately 4½" of the cord through the eyelet. Loop the 4½" end of the cord around the lower half of the pulley.

(6) Loop the long end of the cord over the top of the pulley and back over the brass idler pulley to the drive shaft. Continue the cord around the drive shaft, threading from the inside and over the top. Wrap four complete turns of the cord around the drive shaft and continue the cord over the top of the rocker plate pulley.

(7) Pull on the short end of the cord until the tension spring in the pulley is stretched to within ⅛" of the eyelet. Maintain this tension and tie a knot in the two ends of the cord over the catch which holds the spring. Loop the cord over the spring catch so that the knot is turned in. (A drop of bees' wax on the knot would be an added protection against coming untied.)

To replace the outer cord:

(1) Place the chassis in a horizontal position with the push buttons to the left and the speaker toward you.

(2) Close the condenser gang and mount the large drive pulley on the shaft. Place the pulley on the condenser shaft so that the shaft is flush with the outside of the pulley bushing and the eyelet in the pulley is horizontal with the shaft and toward the dial.

(3) Cut a 22" length of drive cord and tie a knot ½" from the two ends.

(4) Hook one end of the tension spring over the catch provided in the pulley and hook the other end over the drive cord at the knot.

(5) Thread the cord through the eyelet in the pulley and extend one side up and over the vertical brass pulley. Loop this lead around the horizontal idler pulley at the left-hand side of the dial and then around the idler pulley at the right-hand side of the dial and then over the top of the large drive pulley. The tension on the spring should be sufficient to stretch it to within approximately ½" of the eyelet.

(6) With the gang closed, move the pointer to the extreme right-hand end of the dial. Press the cord into the slots in the back of the pointer and check to see that the pointer travels from one end of the dial to the other as the gang is opened and closed. It may be advisable to place some Aratex or other liquid adhesive on the cord where it fits into the pointer.

REPLACING THE A-158 DRIVE CORD

1.—Remove the broken cord and the cord tension spring.

2.—Cut a 30 inch length of drive cord and tie the tension spring approximately 4 inches from one end. Thread both ends through the eyelet in the large pulley from the inside. Hook the other end of the spring to the catch in the pulley and bend catch to secure spring.

3.—Close the condenser gang and see that the eyelet in pulley is on top and that the end of the condenser shaft is flush with the inside of the pulley.

4.—Take the long end of cord and place on small brass idler pulley on the right side of the dial bracket. Loop around pulley in a clockwise direction and then around idler pulley on the left side of the dial bracket, continue on over the top of the large pulley and down to the drive shaft. From the under side of drive shaft wrap 2 turns around shaft in a counter-clockwise direction, bringing cord up on the left side of large pulley. Be sure the cord is on all the pulleys then tie a knot, pulling with sufficient force to stretch the tension spring to within ½ inch of the edge of pulley.

5.—Close gang and place the pointer on the cord at the extreme left end of the dial. Check to see that pointer travels full lenghth of the dial. It may be advisable to place some "ARATEX" or other liquid adhesive on cord where it fits into the pointer.

THE ALIGNMENT PROCEDURE IS THE SAME AS THAT OF MODEL A-258.

The model A-158 and the model A-258 are the same electrically with the exception of a few minor parts. Mechanically they differ in that the A-258 has Push Button Tuning and the A-158 is manually tuned. When referring to the A-258 Parts List for replacement parts for the A-158 disregard all parts listed between Items 7 and 11 and all parts listed under the heading Miscellaneous Mechanical Parts.

PARTS — MODEL A-158 The following are parts to fill the deletions to complete Parts List for the A-158.

Item No.	*Part No.*	*Description*
8	G49—33001	2 Section Gang Condenser
	C —50455B	Glass Dial Face
	MG23—50500	Dial Support Bracket (Riveted to chassis)
	W —43549	Retaining Washer (Drive Shaft)
	W —50512	Drive Shaft
	G9 —43564	Pulley & Hub assembly
	—41582	Drive Cord (30 in.)
9	W —50054B	Ant. Comp. Condensor
16B	W —50105	Condensor 0.1 Mf. 160 V.
	W —50589	Felt (Dial window)
	D —50503B	Case (Rear section)
	C —50504B	Case (Front section)
	—50505	Knob (2 Required)

MODELS A158,A258
Tuner Assembly
Voltage,Parts

CROSLEY RADIO CORP.

PARTS LIST—MODEL A-258

Figures in first column refer to parts in Diagrams.

Item No.	Part No.	Description
1	G167—32000	Ant. Coil
2	G167—32002	Osc. Coil
3	G185—32004	1st I-F Assy., 455 Kc.
4	G186—32004	2nd I-F Assy., 455 Kc.
5	G19 —32977	Motor Noise Check
6	G27 —28067	"A" Filter Choke
7	G16 —29535	"B" Filter Choke
8	G50 —33001	2 Section Gang Cond.
9	—50054B	Ant. Compensating Cond.
	C —50623	Glass Dial Face
	W —50545	L. H. Dial Mtg. Clip
	W —50560	R. H. Dial Mtg. Clip
	W —50517B	Dial Mask (Maroon)
	W —50518	Pointer
	B —78	Screw—Dial Clip Mtg.
	MG23—50550	Dial Mtg. Bracket Assy. (Riveted to Chassis)
	MG28—50550	Manual Drive Shaft Brkt. Assy.
	G8 —43564	Pulley and Hub Assy.
	W —23877	Set Screw—Hub
	—41582	Drive Cord—40 Inches
	W —50590	Spring—Cord Tension—Large Pulley
	W —43561	Spring—Cord Tension—Small Pulley
	W —50524B	Manual Drive Shaft
10	G3 —50369	Temp. Compensating Cond.
11A	W —32380	Condenser, .05 Mf. 200 V.
11B	W —32380	Condenser, .05 Mf. 200 V.
11C	W —32380	Condenser, .05 Mf. 200 V.
11D	W —32380	Condenser, .05 Mf. 200 V.
12	W —37226	Condenser, .02 Mf. 160 V.
13	W —23191A	Condenser, .01 Mf. 400 V.
14	W —50203	Condenser, .0065 Mf. 1,000 V.
15A	W —50161	Condenser, .5 Mf. 120 V.
15B	W —50161	Condenser, .5 Mf. 120 V.
16A	W —50105	Condenser, .1 Mf. 160 V.
16B	W —50105	Condenser, .1 Mf. 160 V.
17Z 17Y	W —50528	Condenser, 4. Mf. 350 V. Condenser, 4. Mf. 350 V.
	W —50224	Cond. Clamp
18	G1 —34002	Condenser, .00025 Mf. Molded
19	G3 —34002	Condenser, .0005 Mf. Molded
20	—35600	Resistor, 100,000 Ohm ¼W.
21A	—35601	Resistor, 300,000 Ohm ¼W.
21B	—35601	Resistor, 300,000 Ohm ¼W.
22A	—36322	Resistor, 500,000 Ohm ¼W.
22B	—36322	Resistor, 500,000 Ohm ¼W.
23	—23616	Resistor, 15,000 Ohm 1W.
24	—35602	Resistor, 1. Megohm ¼W.
25	—35927	Resistor, 2. Megohm ¼W.
26	—50641	Resistor, 750 Ohm ½W.
27	—50643	Resistor, 60 Ohm ½W.
28	—50642	Resistor, 40 Ohm ½W.
		Mounting Parts
	W —38038D	Distributor Suppressor
	W —29754C	Generator Condenser
	—25846	¾" No. 10 P. K. Screw (Set Mtg.)
	—6213	¼"—20 Hex. Nut (Brkt. Mtg.)
	—35065	¼"—20 Screw (Brkt. Mtg.)
	W —38205	¼" Lock Washer (Brkt. Mtg.)
	—32783	Ant. Cable (Accessory)
	W —50167	Mtg. Bracket (Set)
	W —50395	Ammeter Cond. (Accessory)
	W —38935	Case Ground Clip

Fig. 4 Push Button Assembly

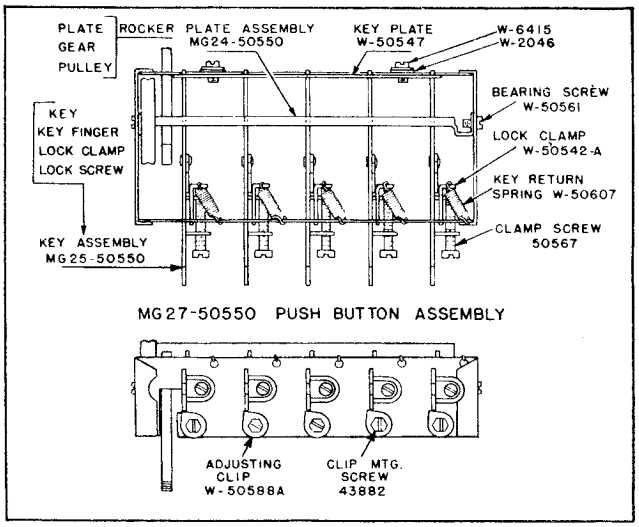

29Z 29Y	—50526	Volume Control, 1. Meg. On-Off Switch
30	G178—36400	8 Prong Socket
	W —50176	Tube Shield Half (2 Req.)
	W —31210	Tube Shield Ring
31	G105—28807	Vib. Socket
	W —50123A	Vib. Gnd. Clip
32	278-BL-7"U"	Speaker, Mfg. Spec. 5B-122
	—45889	Output Trans.
33	B —50641	Power Trans.
	W —50130	Power Trans. Can
34	G1 —50631	Dial Light Bulb—6-8 V.
35Z	G29 —32750	"A" Lead—Set to Fuse
35Y	G27 —32750	"A" Lead—Fuse to Ammeter
36A	—38915	Resistor, 100 Ohm ½W. W. W.
36B	—38915	Resistor, 100 Ohm ½W. W. W.
37	G2 —34002	Condenser, .0001 Mf. Molded
38	G10 —38000	Vibrator, Interchangeable
	G13 —38000	Vibrator
	W —32757	Fuse (12 Amp.)
	W —32776	Fuse Insulator
		Miscellaneous Mechanical Parts
	MG27—50550	Push Button Unit Assy.
	MG25—50550	Key Assy.
	W —50542A	Key Clip (Lock Clamp)
	—50567	⅞"—6x32 Screw (Clamp)
	W —50607	Spring—(Key Return)
	W —50588A	Adjusting Clip (Heart Shaped)
	—43882	¼" No. 8 P. K. Screw (Clip Mtg.)
	W —50547	Key Plate (Rear Guide)
	MG24—50550	Rocker Plate Assy.
	W —50561	⅛"—6x40—Fil. H. Screw (Rocker Plate Bearing)
	W —45553B	Push Button
	W —50551A	Celluloid Cover
	—50549	Call Letter Sheet
	D —50503B	Case (Rear Half) FS49
	C —50554A	Case (Front Half) FS49
	W —50589	Felt (Dial Window)
	—50505	Knob (2 Req.)

TUBE SOCKET VOLTAGE READINGS

Tube	Function	H	P	S	Su	K	Ga	Go
6A8-G	Oscillator-Modulator	6.0	190	100	—	0	102	0
6U7-G	I-F Amplifier	6.0	190	100	0	0	—	—
6Q7-G	Diode Detector & A-F Amp.	6.0	85	—	—	-2.3	—	—
6K6-G	Output	6.0	185	200	—	0	—	—
6X5-G	Rectifier	6.0	—	—	—	200	—	—

Power Output approximately 4 Watts.
Battery Drain approximately 5.7 Amperes at 6 Volts.

©John F. Rider, Publisher

MODELS A168, A268
Tuner Assembly
Parts

CROSLEY RADIO CORP.

PARTS LIST—MODELS A-168 and A-268

Figures in first column refer to parts in Diagrams.

Item No.	Part No.	Description
1	W —43567	Dial Light Bulb, 6-8 V.
2	G175—32000	Antenna Coil
3	G176—32002	Oscillator Coil
4	G191—32004	1st I-F. Trans., 455 Kc.
5	G196—32004	2nd I-F. Trans., 455 Kc.
6	G19 —32977	Motor Noise Choke
7	G29 —28067	"A" Filter Choke
8	—38998B	Ant. Comp. Cond.
	—50049	Nut—Comp. Cond. Mtg.
9	W —35936	Condenser, .05 Mf. 200 V.
10	W —32380	Condenser, .05 Mf. 200 V.
11	G50 —33001	2 Section Gang Condenser
	C —50688	Dial (Glass) A-168 only
	W —50517B	Dial Mask (Maroon) A-168 only
	W —50518A	Pointer—A-168 only
	W —50758	Dial (Glass) A-268 only
	W —50757	Dial Mask (Blue) A-268 only
	W —50759	Pointer—A-268 only
	W —50560	R. H. (Dial Mtg.) Clip
	W —50545	L. H. (Dial Mtg.) Clip
	B —78	Screws—Clip Mtg.
	W —2045	Washers—Clip Mtg.
	W —50524D	Drive Shaft—Manual
	W —50325A	Washer—Shaft Retaining
	MG28—50675	Shaft Brkt. Assm. (Rear Bearing)
	G8 —43564	Pulley and Hub. Assm.
	W —50590	Spring (Tension—22" Cord)
	G6 —41582	Drive Cord—22-Inch
	W —43561	Spring (Tension—18" Cord)
	G5 —41582	Drive Cord—18-Inch
	MG23—50675	Dial Brkt. Assm. Riveted to Chassis
12	G3 —50369	Temp. Comp. Cond. (Bi-metal)
13	G1 —34002	Condenser, .00025 Mf. Molded
14	G3 —34002	Condenser, .0005 Mf. Molded
15	W —50105	Condenser, .1 Mf. 160 V.
16	W —32380	Condenser, .05 Mf. 200 V.
17	W —50682A	Condenser, .5 Mf. 120 V.
18	W —50203	Condenser, .0065 Mf. 1,000 V.
19	G3 —34002	Condenser, .0005 Mf. Molded
20	W —45810B	Condenser, .006 Mf. 160 V.
21Z, 21Y	W —50674	Condenser, 10. Mf. 350 V. / Condenser, 5 Mf. 350 V.
22	G1 —34002	Condenser, .00025 Mf. Molded
23	W —37226	Condenser, .02 Mf. 160 V.
24	W —35758	Condenser, .008 Mf. 400 V.
25	—35600	Resistor, 100,000 Ohms ¼W. Ins.
26	—50699	Resistor, 200 Ohms ½W. W. W.
27	—36322	Resistor, 500,000 Ohms ¼W. Ins.
28	—38915	Resistor, 100 Ohms ½ W. W. W.
29	—38915	Resistor, 100 Ohms ½ W. W. W.
30	—23616	Resistor, 15,000 Ohms 1 W. Carbon
31	—35602	Resistor, 1 Meg. ¼W. Ins.
32	—50671	Resistor, 15 Meg. ¼W. Ins.
33	—45388	Resistor, 1,400 Ohms 1½W. W. W.
34	—35601	Resistor, 300,000 Ohms ¼W. Ins.
35	—38623	Resistor, 750,000 Ohms ¼W. Ins.
36	—40643	Resistor, 25,000 Ohms ¼W. Ins.
37Z	G29 —32750	"A" Lead, Set to Fuse
37Y	G27 —32750	"A" Lead, Fuse to Ammeter
	W —32757	Fuse, 12 Amp.
	W —32776	Fuse Insulator
38, 39, 40, 41, 42, 43	G178—36400	Socket: 6A8-G, 6U7-G, 6Q7-G, 6P5-G, 6AC5-G, 6X5-G
44	G105—28807	Socket Vibrator
	W —50174	Tube Shield Base
	W —50176	Tube Shield Half
	W —31210	Tube Shield Ring
45	278BL7"U"	Speaker—Mfg. Spec. No. 5-B-122
	—45889	Output Transformer
	278BL7"B"	Speaker—Mfg. Spec. No. 55-W-1
	—45721	Output Transformer
46	B —50644A	Power Transformer
	W —50680	Shield—P. T.

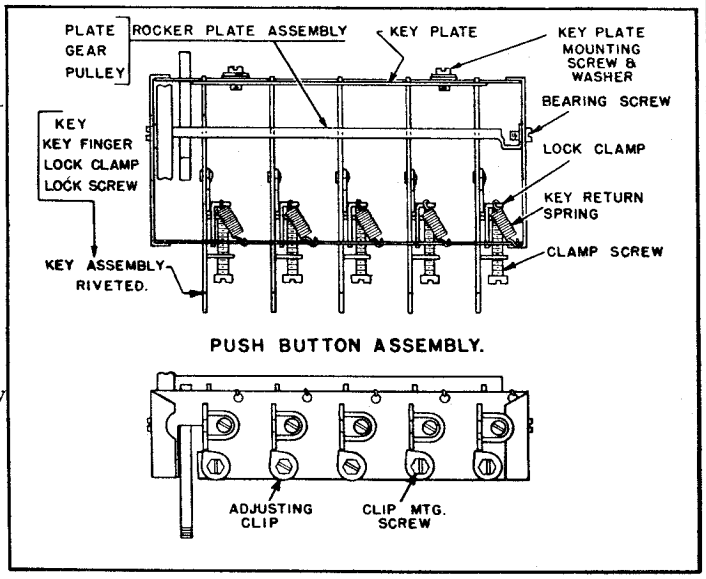

Fig. 4. Push Button Assembly

47Z, 47Y	—50526	Volume Control (1 Meg.) / On-Off Switch
48	G10 —38000	Vibrator (Interchangeable)
	G13 —38000	Vibrator (Interchangeable)
	W —50123A	Vib. Ground Clip

Miscellaneous Mechanical Parts

MG27—50675	Push Button Unit Assy. (Complete) A-168
MG27—50750	Push Button Unit Assy. (Complete) A-268
MG25—50550	Key Assembly
W —50542C	Key Clip (Lock Clamp)
—50639	No. 6—32x1" Fil. Hd. Screw (Adj. Clamp)
W —50607B	Spring (Key Return)
W —50547	Key Plate (Rear Guide)
W —2046	No. 8 Shakeproof Washer (Plate Mtg.)
—31388	No. 8—32x$\frac{3}{16}$ Screw (Plate Mtg.)
W —50588B	Adj. Clip (Heart Shaped)
W —45646B	Adj. Clip
—43882	¼"—No. 8 P. K. Screw (Adj. Clip Mtg.)
MG24—50550	Rocker Plate Assembly
W —50561	⅛"—No. 6-40 Fil. Hd. Screw (Rocker Plate Bearing)
—50722	Push Button—A-168 only
—50755	Push Button—A-268 only
—50597	Call Letter Sheet (Gray) A-168
—50549	Call Letter Sheet (Brown) A-268
W —50551A	Celluloid Cover
—50721	Knob—A-168
—50754	Knob—A-268
D —50503D	Case—Rear Half
C —50554C	Case—Front Half—A-168
W —50765	Case—Front Half—A-268
W —50589	Felt—Dial Opening

Mounting Parts

W —38038D	Distributor Suppressor
W —29754C	Generator Condenser
—25846	¾" No. 10 P. K. Screw (Set Mtg.)
—6213	¼"—20 Hex. Nut (Brkt. Mtg.)
—35065	¼"—20 Screw (Brkt. Mtg.)
W —38205	¼" Lock Washer (Brkt. Mtg.)
—32783	Ant. Cable (Accessory)
W —50167	Mtg. Bracket (Set)
W —50395	Ammeter Cond. (Accessory)
W —38935	Case Ground Clip

©John F. Rider, Publisher

CROSLEY RADIO CORP.

MODELS A168, A268
Sixer Roamios
Schematic, Voltage
Socket, Trimmers
Layout

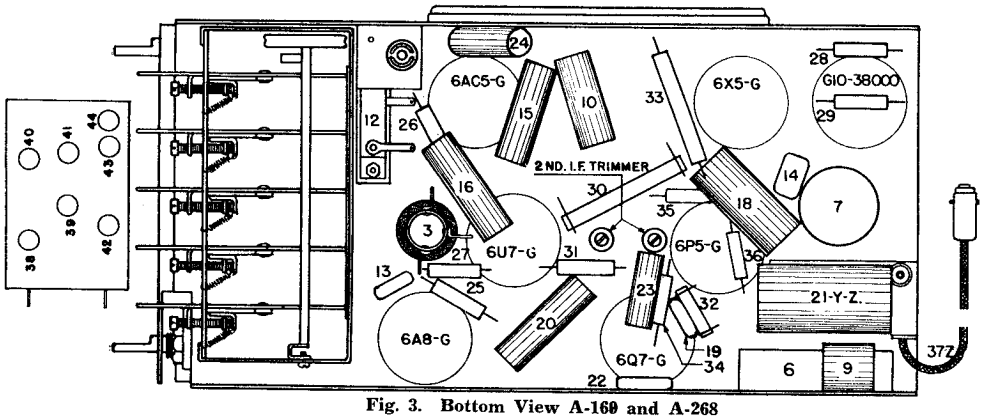

Fig. 3. Bottom View A-169 and A-268

TUBES AND VOLTAGE LIMITS

The following table gives the functions of the tubes used, together with the voltage readings between the tube socket contacts and the receiver chassis. Voltage readings taken with a 1000 ohm per volt, 500 volt voltmeter (except filaments) with receiver in operating condition and no signal input. The filament voltages should be measured with an accurate low range D. C. voltmeter (approximately 0 to 10 volts). Voltage limits may vary plus or minus 10% of values given.

SPECIFICATIONS

The models A-168 and A-268 CROSLEY SAFETY-TUNE SIXER ROAMIOS are single unit, six-tube superheterodyne receivers. They incorporate the new Crosley mechanical Push Button Tuning system. This system is unsurpassed for easy adjustment, accuracy, simplicity and ruggedness of design. The highly efficient superheterodyne circuit employs six tubes to the utmost advantage as follows: one 6A8-G as oscillator and modulator or mixer, one 6U7-G as intermediate frequency amplifier, one 6Q7-G as detector, A. V. C., and 1st. audio amplifier, one 6P5-G as second audio amplifier (driver), one 6AC5-G as power output and a 6X5-G as a rectifier. The vibrator is the full wave type.

Power Output (max.) 6 Watts—approx.
Battery Drain 6.5 Amperes—approx.
It will be noted that certain terminals on the sockets are used as junction blocks.

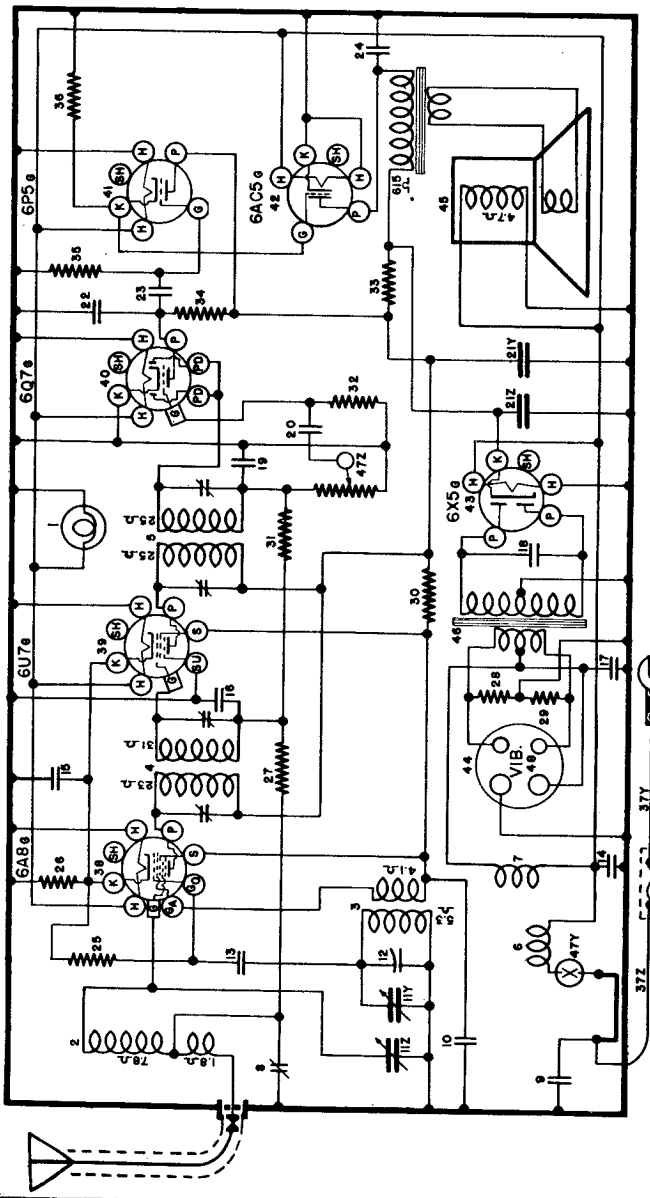

FIG. 1—WIRING DIAGRAM—MODELS A-168 and A-268 MODEL ... 168 268 I.F. 455 K.C. June, 1938

TUBE SOCKET VOLTAGE READINGS

Tube	Function	H	P	S	Su	K	Ga	Go	G
6A8-G	Oscillator-Modulator	6.0	220	100	—	3.5	100	—	—
6U7-G	I-F. Amplifier	6.0	220	100	—	3.5	—	—	—
6Q7-G	Det. A. V. C. 1st A-F. Amplifier	6.0	60	—	—	—	—	—	11
6P5-G	2nd A-F. Amplifier	6.0	200	—	—	11	—	—	—
6AC5-G	Output	6.0	225	—	—	—	—	—	—
6X5-G	Rectifier	6.0	—	—	—	240	—	—	—

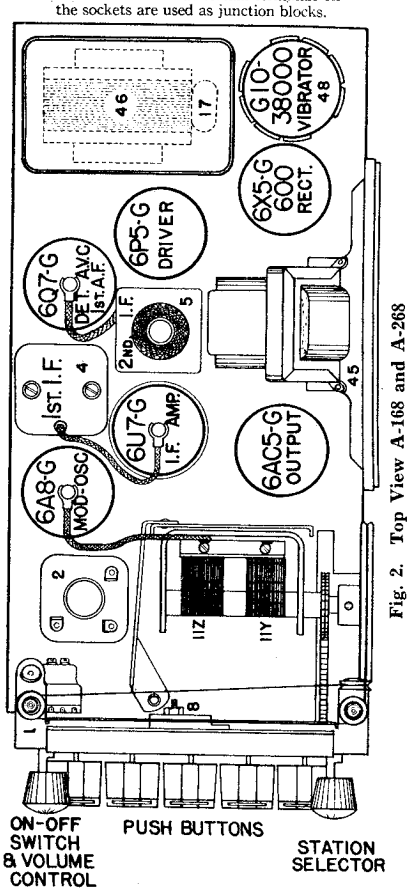

Fig. 2. Top View A-168 and A-268

©John F. Rider, Publisher

MODEL A-268 CROSLEY SAFETY-TUNE SIXER ROAMIO DELUXE
MODEL A-168 CROSLEY SAFETY-TUNE SIXER ROAMIO

SETTING PUSH BUTTONS

Should it become necessary to realign the circuits of the receiver, it may also be necessary to reset the push buttons. The push buttons may be quickly and accurately set, either with the receiver in the case or with the case removed.

Insert a small screw driver in the hole through each push button and loosen (do not remove) the set screw in the bottom of the hole. By means of the conventional tuning knob, tune-in AS ACCURATELY AS POSSIBLE the favorite station having the highest frequency —that is, the station nearest the left-hand end of the dial. Completely depress and hold the No. 1 push button on the left and tighten the set screw SECURELY.

The push button tuning system is now correctly set for the 1st station. Follow through with this same procedure, setting the other four stations in the order of their frequency (kilocycles).

ALIGNMENT PROCEDURE

All the circuits in this receiver are very accurately adjusted at the factory and normally should need no further adjustment. However, if it is definitely known that an adjustment is necessary the circuits can best be properly aligned with the use of a modulated signal generator and an output meter.

CONNECTING OUTPUT METER

One terminal of the output meter is connected to the plate of the 6AC5-G output tube and the other terminal should be connected to the cathode of the 6X5-G rectifier tube. BE SURE THE OUTPUT METER IS PROTECTED FROM D. C. BY CONNECTING A CONDENSER (.1 MF. or larger—NOT electrolytic) IN SERIES WITH ONE OF THE LEADS.

1. Tuning I-F Amplifier To 455 Kilocycles.

(a) Connect the output of the signal generator through a .02 mfd., or larger, condenser to the top cap of the 6U7-G I. F. tube, leaving the tube's grid clip in place. Connect the ground lead from the signal generator to the receiver chassis frame. KEEP THE GENERATOR LEADS AS FAR AS POSSIBLE FROM THE GRID LEADS OF THE OTHER SCREEN GRID TUBES.

(b) Adjust the station selector so that the rotor plates of the tuning condenser are completely disengaged and turn Vol. Cont. to maximum position (RIGHT).

(c) Set the signal generator to 455 kilocycles.

(d) Adjust both 2nd I. F. trimmer condensers for maximum output. Fig. 3.

(e) Transfer generator lead to top of 6A8-G Osc.-Mod. tube, leaving the tube's grid clip in place.

(f) Adjust both trimmers located on the 1st I-F transformer for maximum output.

(g) Repeat operations (d) and (f) for more accurate adjustments.

IN ORDER TO PREVENT A. V. C. ACTION ALWAYS USE THE LOWEST SIGNAL GENERATOR OUTPUT THAT WILL GIVE A REASONABLE OUTPUT METER READING.

2. Aligning R-F Amplifier.

To obtain the greatest gain from the R. F. amplifier, the capacity of the dummy antenna should be equal to the capacity of the antenna with which the receiver is to be used. The capacities of auto radio antennas range from 65 mmf. (.000065 mf.) to 250 mmf. (.00025 mf.), depending upon the size and type. If the receiver is adjusted for maximum efficiency when used with an antenna having a high capacity, it will not operate at its maximum efficiency on an antenna having a much lower capacity and vice versa.

(a) If the receiver is to be used with a whip or streamlined antenna, the output lead from the signal generator should be connected through a .0001 mf. condenser to the "Ant" connection of the receiver. If a large antenna such as a running board type or built-in top antenna is to be used, a .0002 mf. condenser should be used in place of the .0001 mf. condenser.

(b) Set the signal generator to 1400 kilocycles.

(c) Adjust the station selector to 140 on the dial.

(d) Adjust the trimmer on the "OSC" section of the tuning condenser for maximum output.

(e) Adjust the trimmer on the "ANT" section of the tuning condenser for maximum output.

(f) Readjust the station selector for maximum output. DO NOT READJUST THE OSC. TRIMMER.

(g) Repeat operation (e) for more accurate adjustment.

3. Adjusting Antenna Compensating Condenser.

(a) Set the signal generator to 600 kilocycles.

(b) Tune in the 600 kilocycle signal with the station selector for maximum output.

(c) Adjust the antenna compensating condenser, located between the control knobs on the front of the chassis, for maximum output.

(d) Repeat operations (b) and (c) alternately until no further improvement can be obtained.

(e) Set the signal generator to 1400 kilocycles again.

(f) Tune-in the 1400 kilocycle signal with the station selector for maximum output.

(g) Readjust the trimmer on the "Ant" section of the tuning condenser for maximum output.

It will be necessary to adjust the antenna compensating condenser to the car antenna after the receiver has been installed in the car.

(a) After the installation is complete, tune-in a WEAK station between 55 and 65 on the dial.

(b) Adjust the antenna compensating condenser for maximum volume in the speaker.

REPLACING DIAL DRIVE CORDS

Two dial drive cords are used and should the innermost cord break, it will be necessary to remove the outer cord and large pulley before the inner cord can be replaced.

To replace the inner cord:

(1) After removing the broken cord, place the chassis on end with the push buttons "up" and the speaker toward you.

(2) Thread an 18″ length of drive cord through the hook on one end of the tension spring which was removed from the pulley on the end of the push button rocker plate.

(3) Insert both ends of this cord through the eyelet in the rocker plate pulley from the inside. Pull the cord through until the tension spring is pulled into the pulley, then hook the free end of the spring over the catch in the pulley in the side opposite the eyelet.

(4) Open the condenser gang all the way.

(5) Pull all but approximately 4½″ of the cord through the eyelet. Loop the 4½″ end of the cord around the lower half of the pulley.

(6) Loop the long end of the cord over the top of the pulley and back over the brass idler pulley to the drive shaft. Continue the cord around the drive shaft, threading from the inside and over the top. Wrap four complete turns of the cord around the drive shaft and continue the cord over the top of the rocker plate pulley.

(7) Pull on the short end of the cord until the tension spring in the pulley is stretched to within ⅛″ of the eyelet. Maintain this tension and tie a knot in the two ends of the cord over the catch which holds the spring. Loop the cord over the spring catch so that the knot is turned in. (A drop of bees' wax on the knot would be an added protection against coming untied.)

To replace the outer cord:

(1) Place the chassis in a horizontal position with the push buttons to the left and the speaker toward you.

(2) Close the condenser gang and mount the large drive pulley on the shaft. Place the pulley on the condenser shaft so that the shaft is flush with the outside of the pulley bushing and the eyelet in the pulley is horizontal with the shaft and toward the dial.

(3) Cut a 22″ length of drive cord and tie a knot ½″ from the two ends.

(4) Hook one end of the tension spring over the catch provided in the pulley and hook the other end over the drive cord at the knot.

(5) Thread the cord through the eyelet in the pulley and extend one side up and over the vertical brass pulley. Loop this lead around the horizontal idler pulley at the left-hand side of the dial and then around the idler pulley at the right-hand side of the dial and then over the top of the large drive pulley. The tension on the spring should be sufficint to stretch it to within approximately ½″ of the eyelet.

(6) With the gang closed, move the pointer to the extreme right-hand end of the dial. Press the cord into the slots in the back of the pointer and check to see that the pointer travels from one end of the dial to the other as the gang is opened and closed. It may be advisable to place some Aratex or other liquid adhesive on the cord where it fits into the pointer.

©John F. Rider, Publisher

CROSLEY RADIO CORP.

MODEL A267
Schematic, Socket Parts

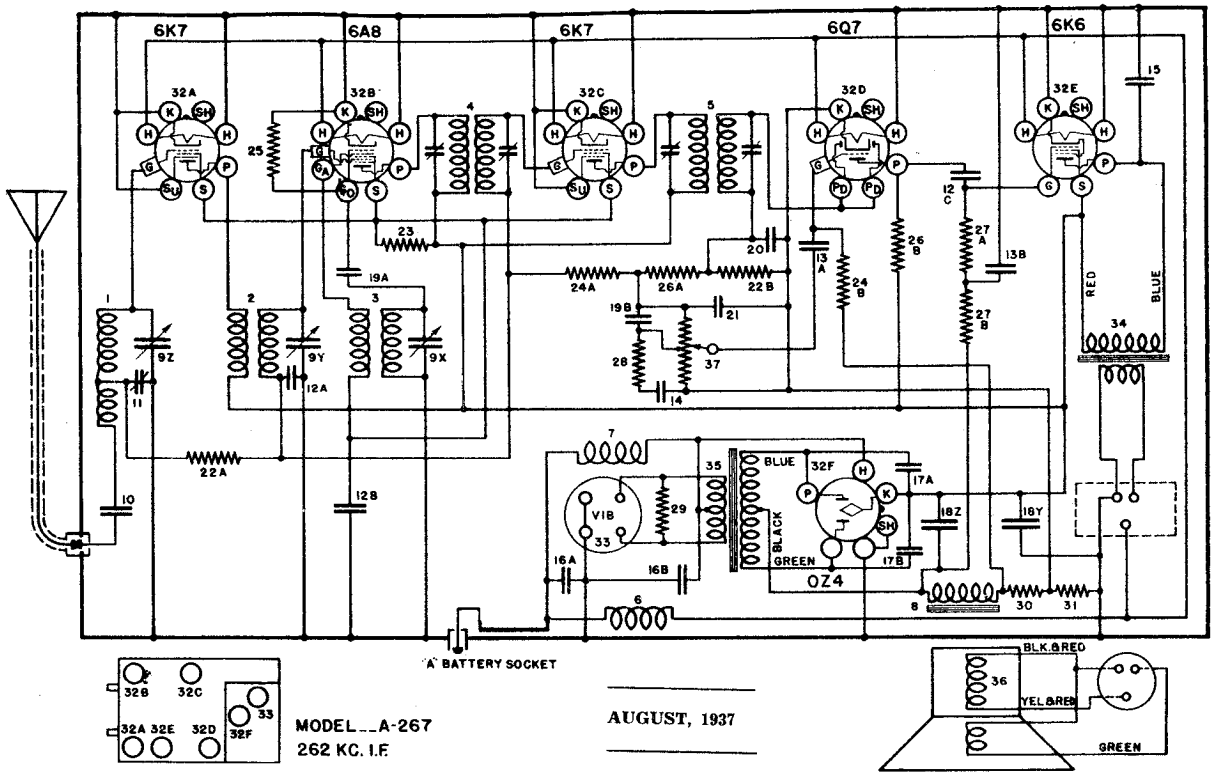

MODEL A-267
262 KC. I.F.

AUGUST, 1937

Power output approximately 5 watts.
Battery drain approximately 6.3 amperes at 6 volts.
Speaker field current approximately 1.0 amperes.

Item No.	Part No.	Description
1	G134—32000	Ant. Coil
2	G93 —32001	R-F. Coil
	MG23—50000	Shield and Brkt. Assy.
	W —32912	Wood-Coil Spacer
3	G143—32002	Osc. Coil
4	G40 —32005	1st I-F. Assy.
5	G41 —32005	2nd I-F. Assy.
6	G17 —32977	Motor Noise Choke
7	G24 —28067	"A" Filter Choke
8	G79 —24628	"B" Filter Choke
9ZYX	G57 —33002	3 Sect. Var. Tuning Condenser
10	W —50039B	Condenser, .003 Mf. 160 V.
11	W —50054A	Condenser, Ant. Compensating
12A	W —32380	Condenser, .05 Mf. 200 V.
12B	W —32380	Condenser, .05 Mf. 200 V.
12C	W —32380	Condenser, .05 Mf. 200 V.
13A	W —24049C	Condenser, .1 Mf. 200 V.
13B	W —24049C	Condenser, .1 Mf. 200 V.
14	W —50084	Condenser, .003 Mf. 160 V.
15	W —50043	Condenser, .006 Mf. 600 V.
16A	W —50161	Condenser, .5 Mf. 120 V.
16B	W —50161	Condenser, .5 Mf. 120 V.
17A	W —50185	Condenser, .01 Mf. 500 V.
17B	W —50185	Condenser, .01 Mf. 500 V.
18YZ	W —50194	Condenser, Dual 6. Mf. 350 V.
19A	G1 —34002	Condenser, .00025 Mf. Mica
19B	G1 —34002	Condenser, .00025 Mf. Mica
20	G3 —34002	Condenser, .0005 Mf. Mica
21	G2 —34002	Condenser, .0001 Mf. Mica
22A	—35601	Resistor, 300,000 Ohm ½W. Ins.
22B	—35601	Resistor, 300,000 Ohm ½W. Ins.
23	—37377	Resistor, 20,000 Ohm 1W. Ins.
24A	—35602	Resistor, 1. Megohm ¼W. Ins.
24B	—35602	Resistor, 1. Megohm ¼W. Ins.
25	—35928	Resistor, 60,000 Ohm ¼W. Ins.
26A	—35600	Resistor, 100,000 Ohm ¼W. Ins.
26B	—35600	Resistor, 100,000 Ohm ¼W. Ins.
27A	—38976	Resistor, 250,000 Ohm ¼W. Ins.
27B	—38976	Resistor, 250,000 Ohm ¼W. Ins.
28	—40757	Resistor, 50,000 Ohm ¼W. Ins.
29	—38977	Resistor, 220 Ohm ½W. Ins.
30	W —23012A	Resistor, 40 Ohm ¾W. Flex.
31	W —25357	Resistor, 75 Ohm ¾W. Flex.
32	G178—36400	Socket—8-Prong
	W —50021	Tube Shield (Grid Lead Cut) (1)
	W —50022	Tube Shield (Plain) (1)
	W —50023	Tube Shield (6K6-G) (2)
	W —31210	Tube Shield Ring
	W —50174	Tube Shield Base
33	G105—28807	Socket-Vibrator
	W —50123	Vib. Ground Clip
34	G78 —24628	Output Transformer
	W —38991A	Speaker Socket, Part of G1-43619 Assy.
35	G17 —32769	Power Transformer
36	456BP9"M"	Speaker, Spec. No. 1-D-1075
	—44548	V. C. and Cone Assy.
	—44549	Field Coil
	—43676	Cone Mtg. Ring
37	—50056	Volume Control (2 Meg. Tap 1 Meg.)
	W —38455A	Case Mtg. Spacer
	—6213	Mtg. Nut (2)
	W —32957	Mtg. Washer (2)
	—32783A	24" Ant. Lead
	W —38038D	Distributor Suppressor
	W —29754C	Generator Condenser
	W —32956A	Mtg. Studs
	B —38985C	Remote Cont. Head and Cables
	—43849	Vol. Cont. Head and Cable Assy.
	—50103	Vol. Cont. Head and Switch
	W —43567	Dial Light
	—50100	Light Socket and Lead
	—50099	"A" Lead to Set
	—50097	"A" Lead—Head to Fuse
	—50098	"A" Lead—Fuse to Ammeter
	—50095	Vol. Cont. Flex. Drive Cable
	—50101	Drive Control Head
	—50206	Celluloid Gear Assy.
	—50096	Cond. Flex. Drive Cable
	—50357	Fuse, 15 Amp.
	G10 —38000	Vibrator
	MG2 —50267	Top Cover Assy. (Spk., etc.)
	W —50180A	Ground Strip (Short)
	W —50181A	Ground Strip (Long)
	B —50187	Speaker Escutcheon
	B —50188	Speaker Screen
	B —50189A	Speaker Grille Cloth
	W —50069A	Speaker Cable Clamp
	W —31393A	"A" Connector on Chassis
	W —31303A	Bushing and Ferrule Used in "A" and Ant. Connections
	W —31301	Spring—Used in Ant. Socket

©John F. Rider, Publisher

©John F. Rider, Publisher

SPECIFICATIONS

The Crosley Model A-267 auto radio is a single unit, six-tube superheterodyne receiver. The power supply unit is built into a completely shielded compartment and is an integral part of the receiver chassis. The tuning range is from 540 to 1530 Kc.

TUBES AND VOLTAGE LIMITS

The following table gives the functions of the tubes used, together with the voltage readings between the tube socket contacts and the receiver chassis. Voltage readings taken with a 1000 ohm per volt, 500 volt voltmeter (except filaments) with receiver in operating condition and no signal input. The filament voltages should be measured with an accurate low range D-C voltmeter (approximately 0 to 10 volts). Voltage limits may vary plus or minus 10% of values given.

NOTE: The negative bias applied to the first three tubes is –3.5 volts, measured across a 75 ohm resistor (Item 31). The 6Q7G tube has a negative bias of –1.9 volts measured across a 40 ohm resistor (Item 30). The 6K6G output tube has a negative bias of –20 volts applied to the grid and is measured from the high side of the "B" filter choke (Item 8) to chassis.

ALIGNMENT PROCEDURE

All the circuits in this receiver are very accurately adjusted at the factory and normally should need no further adjustment. However, if it is definitely known that an adjustment is necessary the circuits can best be properly aligned with the use of a modulated signal generator and an output meter.

CONNECTING OUTPUT METER

Connect the output meter to P and S of the 6K6G Output tube. Be sure the meter is protected from D. C. by connecting a condenser (.1 mfd. or larger—not electrolytic) in series with one of the leads.

NOTE: The receiver chassis should be in its case and a speaker similar to one used with the receiver must be connected to the chassis before making adjustments. It is advisable to use a spare control unit for making adjustments of the volume control and tuning condenser. A standard control unit with short cables (6" to 8") makes a very convenient and useful tool. If it is desired to shorten a pair of long cables it will be absolutely necessary to heavily tin the cables before cutting them.

1. Tuning I-F Amplifier to 262 Kilocycles.

(a) Connect the output of the signal generator through a .02 mfd., or larger, condenser to the top cap of the 6A8G Osc-Mod. tube, leaving the tube's grid clip in place. Connect the ground lead from the signal generator to the receiver chassis frame. KEEP THE GENERATOR LEADS AS FAR AS POSSIBLE FROM THE GRID LEADS OF THE OTHER SCREEN GRID TUBES.

(b) Adjust the station selector so that the rotor plates of the tuning condenser are completely in mesh, and turn the volume control full (ON).

(c) Set the signal generator to 262 kilocycles.

(d) Adjust both trimmers located on the 2nd I-F transformer for maximum output. (Fig. 2).

(e) Adjust both trimmers located on the 1st I-F transformer for maximum output.

(f) Repeat operations (d) and (e) for more accurate adjustments.

ALWAYS USE THE LOWEST SIGNAL GENERATOR OUTPUT THAT WILL GIVE A REASONABLE OUTPUT METER READING.

2. Aligning R-F Amplifier.

(a) Connect the output lead from the signal generator through a .00025 mfd. condenser to the "ANT" connection of the receiver.

(b) Set the signal generator to 1530 kilocycles.

(c) With the condenser gang all the way open, adjust the "OSC" trimmer condenser so that the 1530 kilocycle signal is heard. It is not necessary that the receiver tune through this signal.

(d) Set the signal generator to 1400 kilocycles.

(e) Tune-in the 1400 kilocycle signal with the station selector (approximately 140 on the dial) for maximum reading on the output meter.

(f) Adjust the "R-F" trimmer condenser for maximum output.

(g) Adjust the "ANT" trimmer condenser for maximum output.

DO NOT READJUST THE "OSC" TRIMMER CONDENSER.

(h) Repeat operations (e), (f) and (g) for more accurate adjustments.

3. Adjusting Antenna Compensating Condenser.

(a) Set the signal generator to 600 kilocycles.

(b) Tune-in the 600 kilocycle signal with the station selector for maximum output.

(c) Adjust the antenna compensating condenser, Item No. 11, Fig. 3, for maximum output.

(d) Repeat operations (b) and (c) alternately until no further improvement can be obtained.

(e) Set the signal generator to 1400 kilocycles again.

(f) Tune-in the 1400 kilocycle signal with the station selector for maximum output.

(g) Readjust the trimmer on the "ANT" section of the tuning condenser for maximum output.

It will be necessary to adjust the antenna compensating condenser to the car antenna after the receiver has been installed in the car.

(a) After the installation is complete, tune-in a WEAK station between 55 and 65 on the dial.

(b) Adjust the antenna compensating condenser for maximum volume in the speaker.

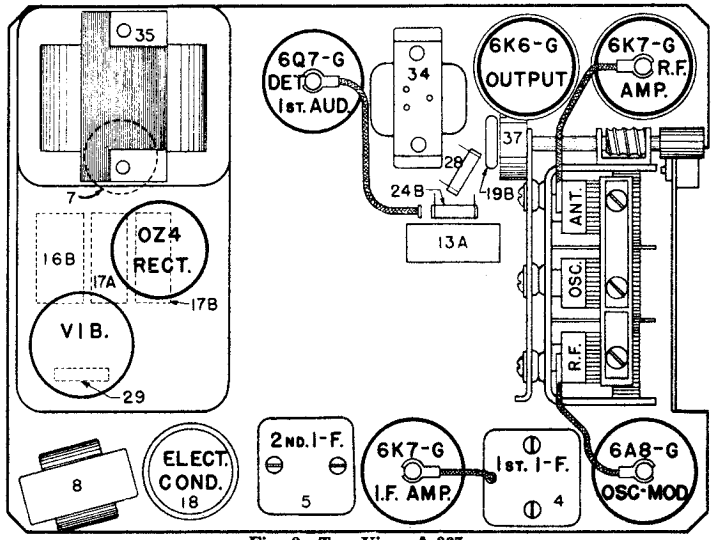

Fig. 2 Top View A-267

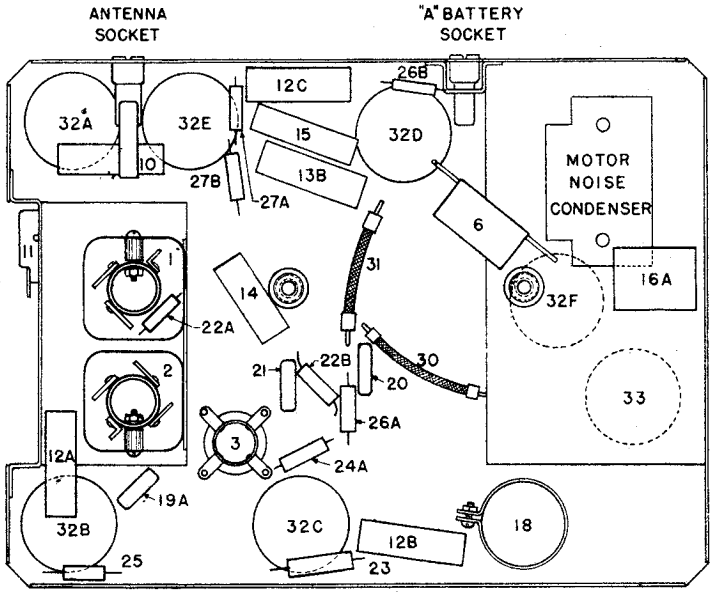

Fig. 3 Bottom View A-267

TUBE SOCKET VOLTAGE READINGS

Tube	Function	H	P	S	K	Go	Ga
6K7G	R-F Amplifier	6.0	235	85	0	—	—
6A8G	Oscillator-Modulator	6.0	235	85	0	0	85
6K7G	I-F Amplifier	6.0	235	85	0	—	—
6Q7G	Det, AVC & A-F Amplifier	6.0	145	—	-3.5		
6K6G	Output	6.0	235	235	0		
OZ4	Rectifier	—	—	—	250		

CROSLEY RADIO CORP.

MODEL A358, Roamio
Schematic, Socket
Trimmers, Layout
Voltage

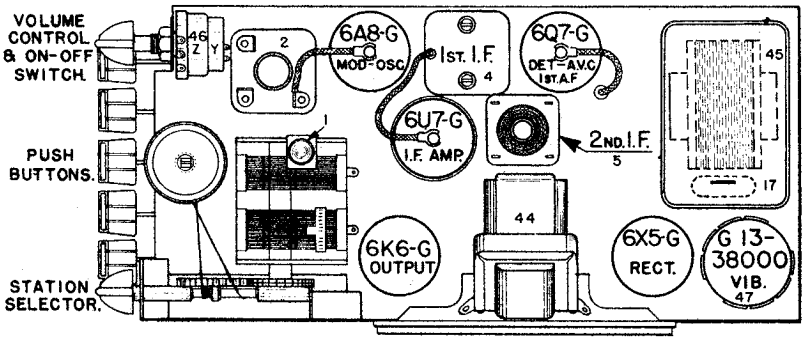

Fig. 2 Top View A-358

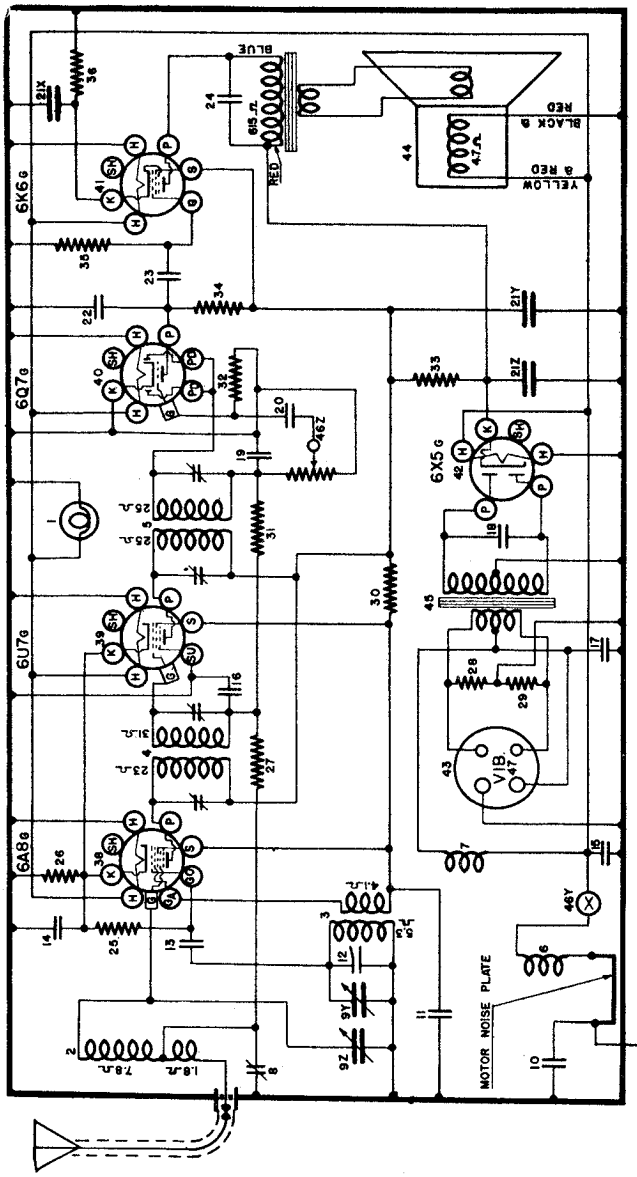

FIG. 1—WIRING DIAGRAM—MODEL A-358

JUNE, 1938

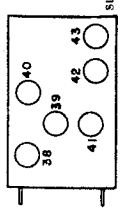

MODEL - - 358

455 KC. I.F.

SPECIFICATIONS

This model Crosley Roamio is a single unit five-tube superheterodyne receiver. It incorporates an unusual push button tuning system of rugged mechanical design that is positive, accurate, and easy to adjust and operate. A highly efficient superheterodyne circuit employs five tubes to the utmost advantage as follows: one 6A8G as an oscillator and mixer or modulator, one tube 6U7G as an intermediate frequency amplifier, one 6Q7G as detector, A. V. C. and 1st A.F. amplifier, one 6K6G as power output amplifier and a 6X5G as a rectifier. A full wave vibrator is used. Bias for the 6A8G and 6U7G tubes is obtained across item 26 (220 ohm resistor), for the 6K6G tube across item 36 (600 ohm resistor).

TUBES AND VOLTAGE LIMITS

The following table gives the functions of the tubes used, together with the voltage readings between the socket contacts and the receiver chassis. Voltage readings taken with a 1000 ohm per volt, 500 volt voltmeter (except filaments) with receiver in operating condition and no signal input. The filament voltages should be measured with an accurate low range D-C voltmeter (approximately 0 to 10 volts). Voltage limits may vary plus or minus 10% of values given.

TUBE SOCKET VOLTAGE READINGS

Tube	Function	H	P	S	Su	K	Ga	Go
6A8-G	Oscillator-Modulator	6.0	220	100	—	3.7	100	—
6U7-G	I-F Amplifier	6.0	220	100	—	3.7	—	—
6Q7-G	Diode Detector & A-F Amp.	6.0	65	—	—	—	—	—
6K6-G	Output	6.0	220	220	—	16	—	—
6X5-G	Rectifier	6.0	—	—	—	230	—	—

Power Output approximately 4 Watts. (Max.)
Battery Drain approximately 6.2 Amperes at 6 Volts.
It should be noted that some of the lugs on the sockets are used as junction blocks.

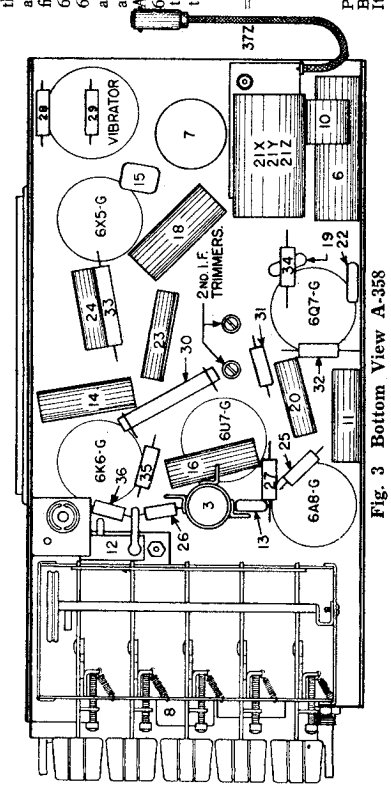

Fig. 3 Bottom View A-358

©John F. Rider, Publisher

©John F. Rider, Publisher

MODEL A-358
REPLACING DIAL DRIVE CORD

(1) Remove the broken cord and the cord tension spring.

(2) Cut a 29 inch length of drive cord and tie the tension spring approximately 4 inches from one end.

(3) Insert both ends of this cord through the eyelet in the rocker-plate pulley from the inside.

(4) Pull the cord through until the tension spring is pulled into the pulley, then hook the spring over the notch formed in the pulley (opposite the eyelet).

(5) Close the gang condenser.

(6) Loop the long end of the cord around the pulley in a counter clock-wise direction, then up and over the manual control shaft (no turn). Continue over the dial shaft. Wrap two and a half turns around the shaft, starting at the top and winding in a counter clockwise direction toward the hole in the shaft.

(7) Thread the cord through the hole in the shaft twice and make one turn in a counter clockwise direction around the lower part of the shaft.

(8) Continue the cord over to and under then over the manual drive shaft. Starting at the front end of the 1st groove in the drive shaft wrap 8 turns in a clockwise direction around shaft. Continue cord down and around the pulley on the rocker arm plate.

(9) Pull on the short end of the cord to stretch the tension spring to within one eighth of an inch of the rim. Keeping this same tension on the spring wrap the cord around the pulley to meet long end. Tie ends together (at the cutout in the pulley) securely. Loop the knot in the cord over the notch in the pulley, placing the knot on the inside of the pulley-rim. (A drop of bees' wax on the knot would be added protection against coming untied).

(10) Check to see that the gang condenser opens properly and that the dial tracks.

SETTING THE PUSH BUTTONS

Should it become necessary to realign the circuits of the receiver, it may also be necessary to reset the push buttons. The push buttons may be quickly and accurately set, either with the receiver in the case or with the case removed.

Insert a small screw driver in the hole through each push button and loosen (do not remove) the set screw in the bottom of the hole. By means of the conventional tuning knob, tune-in AS ACCURATELY AS POSSIBLE the favorite station having the highest frequency —that is, the station nearest the left hand side of the case. **PUSH THE NO. 1 BUTTON ALL THE WAY DOWN AND HOLD IN THAT POSITION WHILE YOU SECURELY TIGHTEN THE SET SCREW.**

The push button tuning system is now correctly set for the 1st station. Follow through with this same procedure, setting the other four stations in the order of their frequency (kilocycles).

ALIGNMENT PROCEDURE

All the circuits in this receiver are very accurately adjusted at the factory and normally should need no further adjustment. However, if it is definitely known that an adjustment is necessary the circuits can best be properly aligned with the use of a modulated signal generator and an output meter.

CONNECTING OUTPUT METER

Connect the output meter to P and S of the 6K6G Output tube. Be sure the meter is protected from D.C. by connecting a condenser (.1 mfd. or larger—not electrolytic) in series with one of the leads.

1. Tuning I-F Amplifier To 455 Kilocycles.

(a) Connect the output of the signal generator through a .02 mfd., or larger, condenser to the top cap of the 6U7G I. F. tube, leaving the tube's grid clip in place. Connect the ground lead from the signal generator to the receiver chassis frame. KEEP THE GENERATOR LEADS AS FAR AS POSSIBLE FROM THE GRID LEADS OF THE OTHER SCREEN GRID TUBES.

(b) Adjust the station selector so that the rotor plates of the tuning condenser are completely disengaged and turn Vol. Cont. to maximum position (RIGHT).

(c) Set the signal generator to 455 kilocycles.

(d) Adjust both 2nd I. F. trimmer condensers for maximum output. Fig. 3.

(e) Transfer generator lead to top of 6A8G Osc.-Mod. tube, leaving the tube's grid clip in place.

(f) Adjust both trimmers located on the 1st I-F transformer for maximum output.

(g) Repeat operations (d) and (f) for more accurate adjustments.

IN ORDER TO PREVENT A. V. C. ACTION ALWAYS USE THE LOWEST SIGNAL GENERATOR OUTPUT THAT WILL GIVE A REASONABLE OUTPUT METER READING.

2. Aligning R-F Amplifier. note below.

3. Adjusting Antenna Compensating Condenser. SEE MODELS A168, A268, for 2 & 3

Figures in first column refer to parts in Diagrams.

Item No.	Part No.	Description
1	W —43567	Dial Light Bulb 6-8 Volt
	MG11—50700	D. L. Socket & Brkt. Assy.
2	G175 —32000	Antenna Coil
3	G176 —32002	Oscillator Coil
4	G197 —32004	1st. I. F. Assembly, 455 Kc.
5	G198 —32004	2nd. I. F. Assembly, 455 Kc.
6	G19 —32997	Motor Noise Choke
7	G29 —28067	"A" Filter Choke
8	—38998B	Antenna Compensating Condenser
	—50049	Nut For Item 8 (¼—40)
9	G57 —33001	2 Section Gang Condenser
	C —50711A	Dial (Celluloid)
	W —50716	Dial Holder
	W —50711A	Dial Shaft (Pulley)
	W —50325A	Shaft Retaining Washer
	W —50524D	Shaft, Manual Drive
	G7 —41582	Drive Cord, 29 inches
	W —44989	Spring, Tension
	W —50516C	Bracket (Manual Drive Shaft)
10	W —35936	Condenser, .05 Mf. 200 Volt
11	W —32380	Condenser, .05 Mf. 200 Volt
12	G4 —50369	Temperature Compensating Condenser
13	G1 —34002	Condenser, .00025 Mf. Molded
14	W —50105	Condenser, .1 Mf. 160 Volt.
15	G3 —34002	Condenser, .0005 Mf. Molded
16	W —32380	Condenser, .05 Mf. 200 Volt
17	W —50682	Condenser, .5 Mf. 120 Volt
18	W —50203	Condenser, .0065 Mf. 1000 Volt
19	G3 —34002	Condenser, .0005 Mf. Molded
20	W —45810B	Condenser, .006 Mf. 160 Volt
21Z, 21Y, 21X	W —50673	Condenser, 5 Mf. 350 Volt; Condenser, 5 Mf. 350 Volt; Condenser, 20 Mf. 25 Volt
	W —50684	Condenser Clamp
22	G1 —34002	Condenser, .00025 Mf. Molded
23	W —37226	Condenser, .02 Mf. 160 Volt
24	W —23191A	Condenser, .01 Mf. 400 Volt
25	—35600	Resistor, 100,000 Ohm ¼ W., Ins.
26	—38977	Resistor, 220 Ohm ½ W., Ins.
27	—36322	Resistor, 500,000 Ohm ¼ W., Ins.
28	—38915	Resistor, 100 Ohm ½ W., Ins.
29	—38915	Resistor, 100 Ohm ½ W., Ins.
30	—23616	Resistor, 15,000 Ohm 1 W., Car.
31	—35602	Resistor, 1 Megohm ¼ W., Ins.
32	—50671	Resistor, 15 Megohm ¼ W., Ins.
33	—45388	Resistor, 1,400 Ohm 1½ W., Ins.
34	—35601	Resistor, 300,000 Ohm ¼ W., Ins.
35	—38623	Resistor, 750,000 Ohm ¼ W., Ins.
36	—38918	Resistor, 600 Ohm ½ W., Ins.
37Z	G29 —37750	"A" Lead, Set To Fuse
37Y	G27 —32750	"A" Lead, Set To Ammeter
	W —32757	Fuse, 12 Amp.
	W —32776	Fuse Insulator
38, 39, 40, 41, 42	G178 —36400	8 Prong Socket
		Tube Shield Half (2 Req.)
		Tube Shield Ring
43	G105 —28807	4 Prong Socket
44	278-BL-7"U"	Speaker Mfg. Spec. No. 5B-122
	—45889	Output Transformer "U"
	278-BL-7"B"	Speaker Mfg. Spec. No. 55-W1
	—45721	Output Transformer "B"
45	B —50644	Power Transformer
46Z	—50526	Volume Control; On-Off Switch
46Y		
47	G10 —38000	Vibrator, Interchangeable
	G13 —38000	Vibrator
	MG27—50700	Push Button Unit Assy.
	MG25—50550	Key Assy.
	W —50542C	Key Clip (Lock Clamp)
	—50639	1" No. 6 x 32 Screw (Clamp)
	W —50607B	Spring (Key Return)
	W —50588B	Adjusting Clip (Heart Shaped)
	—43882	¼" No. 8 P. K. Screw (Clip Mounting)
	W —50547	Key Plate (Rear Guide)
	MG24—50550	Rocker Plate Assy.
	W —50561	⅛" No. 6 x 40 Fil. Hd. Screw (Rocker Plate Bearing)
	—45553B	Push Button
	W —50551A	Celluloid Cover
	—50549	Call Letter Sheet
	D —50503D	Case (Rear Half) FS66
	C —50703A	Case (Front Half) FS66
	—50505	Knob (2 Req.)
		Mounting Parts
	W —38038D	Distributor Suppressor
	W —29754C	Generator Condenser
	—25846	¾" No. 10 P. K. Screw (Set Mtg.)
	—6213	¼"—20 Hex. Nut (Brkt. Mtg.)
	—35065	¼"—20 Screw (Brkt. Mtg.)
	W —38205	¼" Lock Washer (Brkt. Mtg.)
	—32783	Ant. Cable (Accessory)
	W —50167	Mtg. Bracket (Set)
	W —50395	Ammeter Cond. (Accessory)
	W —38935	Case Ground Clip

MODEL 418, Vanity
Schematic, Socket
Trimmers, Layout

CROSLEY RADIO CORP.

MODEL 418 (VANITY)
SPECIFICATIONS

This model Crosley is a four-tube Tuned Radio Frequency receiver designed for operation on 110 volt circuits, either A.C. or D.C. The features incorporated are, Push Button Tuning, Dynamic Speaker, Pentode Output and a highly efficient T. R. F. circuit. The frequency range is from 1725 to 540 kilocycles. The tubes used are, one 6D6 as R.F amplifier, one 6C6 as detector, one 25A7G as Pentode output and Rectifier, and one W-45788 Ballast tube. The volume control changes the bias on the 6D6 and, at the same time the amount of signal fed to the antenna coil primary. The bias for the 6C6 is obtained from the voltage drop across item 17 (25000 ohm resistor) and the bias for the 25A7G is obtained from the drop in the speaker field (525 ohm), which is in the negative leg. This voltage is filtered by item 19 (200,000 ohm resistor) before it is applied to the output grid.

This receiver incorporates a certain amount of fixed regeneration to improve selectivity and sensitivity. With a normal antenna the receiver is stable and the performance approaches that of a three gang T. R. F. receiver in spite of the fact that only a two gang condenser is used. However with no antenna or a very small antenna the receiver will oscillate but this oscillation can readily be controlled by the volume control.

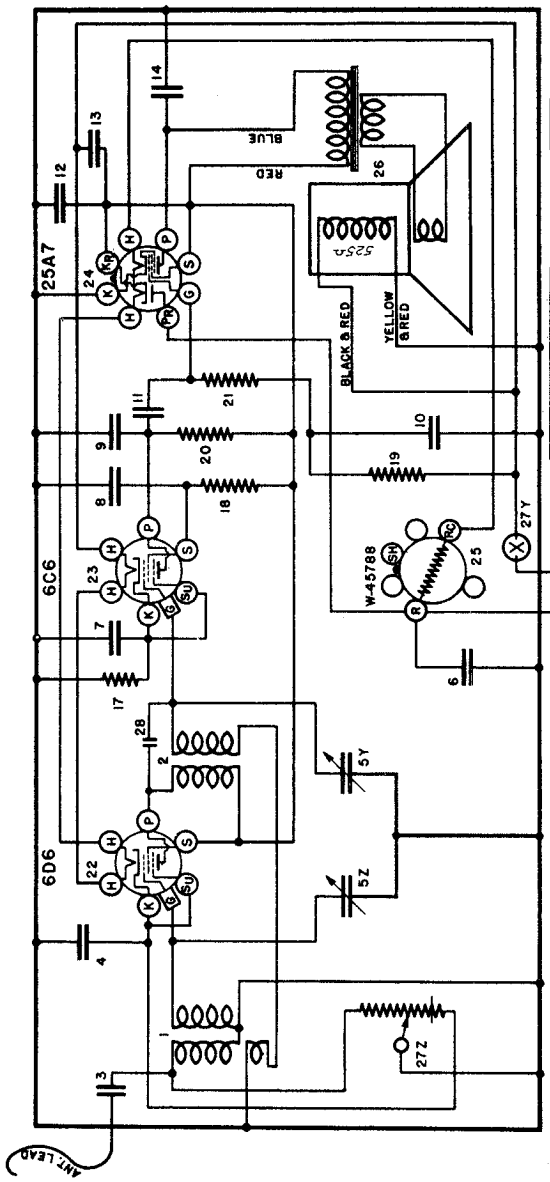

FIG. 1—WIRING DIAGRAM—MODEL 418

JUNE, 1938

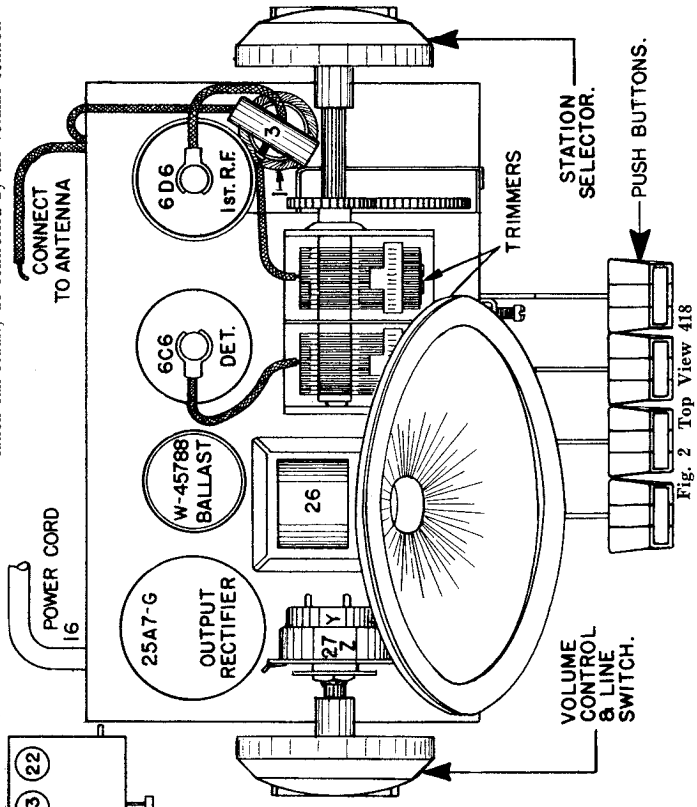

Fig. 2 Top View 418

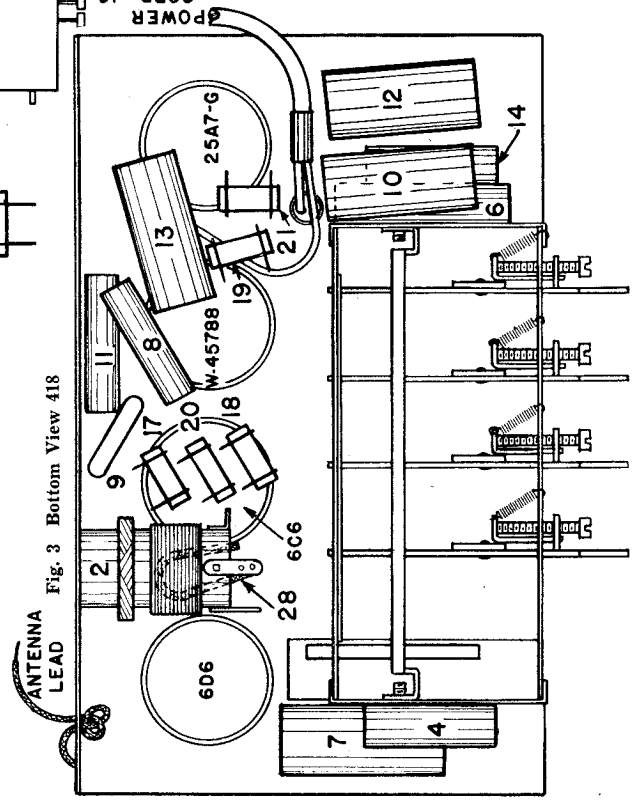

Fig. 3 Bottom View 418

©John F. Rider, Publisher

MODEL 418, Vanity
Tuner, Alignment
Voltage, Parts

CROSLEY RADIO CORP.

SETTING THE PUSH BUTTONS

The push buttons may be quickly and accurately set from the front of the receiver. Insert a small screw driver in the hole in the front of each push button to be set and loosen (DO NOT REMOVE) the set screw at the bottom of the hole.

Determine the favorite broadcasting stations whose call letters are to be placed in the push buttons. By means of the station selector knob, tune-in AS ACCURATELY AS POSSIBLE the station having the highest frequency (kilocycles), that is the one nearest the 150 marking on the knob. Completely depress and hold the right hand push button in that position, while you SECURELY TIGHTEN THE SET SCREW.

The push button system is now set for the first station. Follow through with this same procedure, setting the other stations in the order of their frequency (kilocycles).

Cut the call letters of the stations selected, from the list supplied with your receiver and press them into the openings in the front of the push buttons. Four pieces of clear celluloid are supplied in a small envelope and should be snapped into place over the call letters to protect and hold them in place.

TUBES AND VOLTAGE LIMITS

The following table gives the functions of the tubes used, together with the voltage readings between the tube socket contacts and chassis. Voltage readings should be taken with a 1000 ohm per volt, 250 volt voltmeter (except filaments) with volume control full on and no signal input. The filament voltages should be measured with an accurate low range voltmeter. Voltage limits may vary plus or minus 10% of values given.

CONNECTING OUTPUT METER

Connect one terminal of the output meter to the plate and the other terminal to the screen of the 25A7G output tube. Be sure the meter is protected from D.C. by connecting a condenser (.1 mfd., or larger—not electrolytic) in series with one of the leads.

ALIGNMENT PROCEDURE

The chassis of this receiver is connected through the speaker field to one side of the power line and should be isolated in order that the power supply will not be short-circuited while the receiver is being aligned.

(a) Connect the output lead of the signal generator through a .0001 mf. condenser to the antenna lead on the set and the other lead through a .001 mf. condenser to the chassis (if your signal generator is A.C. operated).

(b) Open the gang condenser all the way.

(c) Set the generator to 1725 Kc.

(d) Adjust the trimmers on the gang until the 1725 Kc. signal is heard. Gang does not have to tune through this signal.

(e) Set the generator to 1400 Kc.

(f) Tune set to 1400 signal, then alternately adjust trimmers on gang until no further improvement can be noted.

NOTE: Always use the lowest signal generator output that will give a reasonable indication on the output meter.

Keep the two grid leads as far as possible from each other.

Check Push Buttons to see if they need resetting.

TUBE SOCKET VOLTAGE READINGS

Tube	Function	H	P	S	K	Su	G
6D6	R. F. Amplifier	6.3	103	104	2.5-25	2.5-25	—
6C6	Detector	6.3	24	8	10	10	—
25A7-G	Output	25	95	104	—	—	-10
	Rectifier	25	—	—	124	—	—
W—45788	Ballast	80 A. C.					

Power Output approximately 1.0 watts @ 125 Line. Drop across field 20 volts.
Power consumption at 117.5 volts A. C. = 44 watts.
All readings except filaments will be approx. 15% lower at 117.5 D. C.

PARTS LIST — MODEL 418

Figures in first column refer to parts in Diagrams.

Item No.	Part No.	Description
1	G173—32000	Antenna Coil
2	G102—32001	Oscillator Coil
3	W —45780B	Condenser, .02 Mf. 160 Volt
4	W —45780B	Condenser, .02 Mf. 160 Volt
5Z, 5Y	G53 —33001	2 Section Gang Condenser
6	W —45782B	Condenser, .05 Mf. 400 Volt
7	W —45781B	Condenser, .25 Mf. 160 Volt
8	W —45780B	Condenser, .02 Mf. 160 Volt
9	G2 —34002	Condenser, .0001 Mf. Molded
10	W —45781B	Condenser, .25 Mf. 160 Volt
11	W —45780B	Condenser, .02 Mf. 160 Volt
12	W —45783	Condenser, 16 Mf. 150 Volt
13	W —45783	Condenser, 16 Mf. 150 Volt
14	W —45780B	Condenser, .02 Mf. 160 Volt
15	—None	
16	B —45784	Power Cord & Plug
	W —45902	Clamp—Power Cord
17	—24990	Resistor, 25,000 Ohm 1/3 W.
18	—37583	Resistor, 2.5 Megohm 1/3 W.
19	—34018	Resistor, 200,000 Ohm 1/3 W.
20	—23785	Resistor, 500,000 Ohm 1/3 W.
21	—21455	Resistor, 300,000 Ohm 1/3 W.
22	G21 —28807	Socket, 6 Prong
23	G21 —28807	Socket, 6 Prong
24	G178—36400	Socket, 8 Prong (Octal)
25	G178—36400	Socket, 8 Prong (Octal)
	W —34175	Tube Shield Half (Slotted)
	W —34174	Tube Shield Half
	W —31210	Ring—Tube Shield
26	282-BL-4	Speaker Mfg. Spec. No. 5-B-129
	—46045	Output Transformer
	W —45900A	Speaker Mtg. Brkt.
27Z, 27Y	—45786	Volume Control (40,000 Ohm) / Line Switch
	W —45789A	V. C. Mtg. Brkt.
28	G3 —50640	Condenser, 7-10 Mmf.
	G6 —45683	Push Button Unit
	G27 —45683	Rocker Plate Assy.
	G26 —45683	Key Assy.
	W —50542C	Key Clip (Lock Clamp)
	—45717	Adjusting Screw
	W —50607B	Spring (Key Return)
	W —50561	Bearing Screw (Rocker Plate)
	W —50547	Key Plate (Rear Guide)
	W —45788	Ballast Tube
	W —46259	Cabinet Assy. 8BB (Brown)
	—45828B	Back Cabinet 8BB (Brown)
	W —45930C	Rubber Foot (Bottom)
	W —45931	Rubber Foot (Screw Type) (Back)
	W —45852	Baffle Board
	W —45853	Grille Cloth
	—45553B	Push Button (Brown)
	—45822	Dial Knob (Brown)
	—45825A	Vol. Cont. Knob (Brown)
	—50549	Station Call Letter List
	W —50551A	Celluloid Protector (Cover)

©John F. Rider, Publisher

MODEL 428
Schematic, Socket
Trimmers, Layout

CROSLEY RADIO CORP.

SPECIFICATIONS

This model, Crosley is a four-tube Tuned Radio Frequency receiver designed for operation on 110 volt circuits, either A. C. or D. C. Push Button tuning, Beam power output, Dynamic Speaker are a few of the features incorporated in this receiver. The frequency range is from 1725 to 540 Kc. The tubes used and their functions are as follows: one 6D6 as R-F amplifier, one 6C6 as biased detector, one 25L6-G as beam power output and one 25Z6-G as rectifier. The volume control varies the bias on the 6D6 and at the same time the amount of signal fed to the antenna coil primary. The bias for he 6C6 is obtained from the voltage drop across item 16 (25000 ohm resistor) and for the 25L6-G from the drop across item 20 (110 ohm resistor)

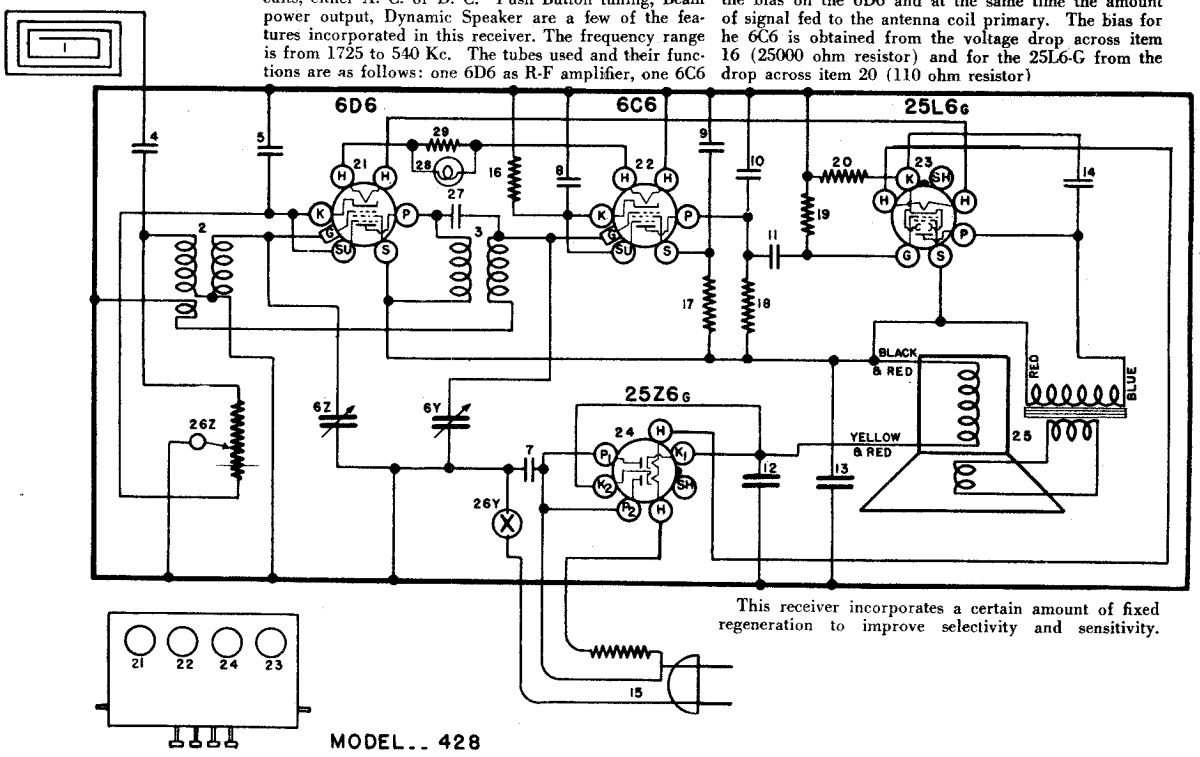

This receiver incorporates a certain amount of fixed regeneration to improve selectivity and sensitivity.

FIG. 1—WIRING DIAGRAM—MODEL 428

JULY, 1938

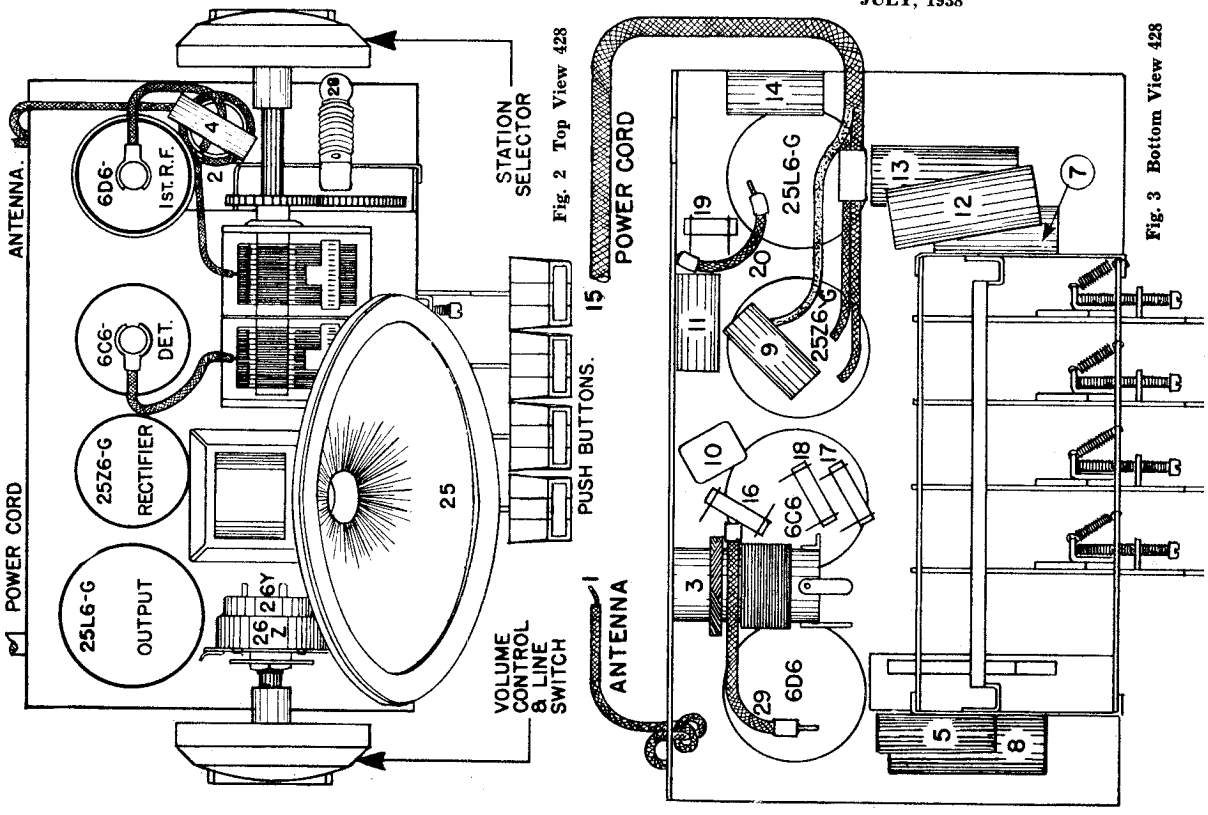

Fig. 2 Top View 428

Fig. 3 Bottom View 428

©John F. Rider, Publisher

MODEL 428
Tuner, Alignment
Voltage, Parts

CROSLEY RADIO CORP.

MODEL 428 VANITY DE LUXE

CONNECTING OUTPUT METER

Connect the one terminal of the output meter to the plate and the other terminal to the screen of the 25L6-G Output tube. Be sure the output meter is protected from D. C. by connecting a condenser (.1 mfd. or larger —NOT electrolytic) in series with one of the leads.

ALIGNMENT PROCEDURE

The chassis of this receiver is connected to one side of the power line, therefore when using an A. C. operated signal generator for alignment the following precaution should be taken.

(a) Connect the output lead of the signal generator through a .0001 Mf. condenser to the antenna lead on the receiver (after the antenna has been completely unrolled. The ground lead of the generator should be connected through a .001 Mf. condenser to the chassis.

(b) Open the gang condenser all the way.

(c) Set the generator to 1725 Kilocycles.

(d) Adjust the trimmer condensers on the gang until the 1725 Kc signal is heard. The gang does not have to tune through this signal.

(e) Set the generator to 1400 Kc.

(f) Tune the set to the 1400 Kc. signal, then alternately adjust the trimmers on the gang until no further improvement can be noticed on the output meter.

NOTE: Always use the lowest signal generator output that will give a reasonable indication on the output meter.

With a normal antenna the receiver is stable and the performance approaches that of a three gang T. R. F. receiver in spite of the fact that only a two gang condenser is used. However with no antenna or a very small antenna the receiver will oscillate but this oscillation can readily be controlled by the volume control.

Keep the two grid leads as far as possible from each other.

If the receiver has been re-aligned it may be necessary to readjust the setting of the push buttons.

SETTING THE PUSH BUTTONS

See MODEL 418

TUBES AND VOLTAGE LIMITS

The following table gives the functions of the tubes used, together with the voltage readings between the tube socket contacts and chassis. Voltage readings should be taken with a 1000 ohm per volt, 250 volt voltmeter (except filaments) with volume control full on and no signal input. The filament voltages should be measured with an accurate low range voltmeter. Voltage limits may vary plus or minus 10% of values given.

TUBE SOCKET VOLTAGE READINGS

Tube	Function	H	P	S	K	Su	G
6D6	R-F Amplifier	6.3	97	98	2.5–25	2.5–25	—
6C6	Detector	6.3	20	10	7	—	—
25L6-G	Output	25	85	98	6	—	—
25Z6-G	Rectifier	25	—	—	126	—	—

Power output approximately 2 watts. Drop across field 28 volts.
Power consumption at 117.5 volts line 45 watts (A.C.).
All readings except filaments will be approximately 15% lower on 117.5 D. C.

Figures in first column refer to parts in Diagrams.

Item No.	Part No.	Description
1	W —45577	Antenna Roll
2	G180—32000	Antenna Coil
3	G104—32001	R. F. Coil
4	W —45780B	Condenser, .02 Mf. 160 V.
5	W —45780B	Condenser, .02 Mf. 160 V.
6Z 6Y	G53 —33001	2 Section Gang Condenser
7	W —45782B	Condenser, .05 Mf. 400 V.
8	W —45781B	Condenser, .25 Mf. 160 V.
9	W —45780B	Condenser, .02 Mf. 160 V.
10	G2 —34002	Condenser, .0001 Molded
11	W —45780B	Condenser, .02 Mf. 160 V.
12	W —45783	Condenser, 16 Mf. 150 V. Elect.
13	W —45783	Condenser, 16 Mf. 150 V. Elect.
14	W —45817A	Condenser, .05 Mf. 160 V.
15	B —46114	Power Cord (165 Ohm 15W Lead)
	W —45902	Cord Clamp
16	—24990	Resistor, 25,000 Ohms ⅛W.
17	—37583	Resistor, 2.5 Meg Ohms ⅛W.
18	—23785	Resistor, 500,000 Ohms ⅛W.
19	—23785	Resistor, 500,000 Ohms ⅛W.
20	W —45965	Resistor, 110 Ohms ½W. Flex.
21	G21 —28807	6 Prong Socket
22	G21 —28807	6 Prong Socket
23	G178—36400	8 Prong Socket
24	G178—36400	8 Prong Socket
	W —34175	Tube Shield Half (Slotted)
	W —34174	Tube Shield Half (Plain)
	W —31210	Tube Shield Ring
25	281-BL-5-U	Speaker Spec. 5-B-130
	W —45900A	Speaker Mtg. Bracket
26Z 26Y	—45786	Volume Control, 40,000 Ohms On-Off Switch
	W —45789A	V. C. Mtg. Bracket
27	G3 —50640	Condenser Assembly
28	W —44337	Dial Light, 6-8 Volt
	W —40570	Dial Light Shield
	G6 —27134	Dial Light Socket
29	W —44396	Resistor, 40 Ohms 3½W. Flex.
		PUSH BUTTON PARTS
	G6 —45683	Push Button Unit Assembly
	G26 —45683	Key and Toggle Assembly
	W —50542C	Key Clip (Lock Clamp)
	—45717	Adjusting Screw
	G27 —45683	Rocker Plate Assembly
	W —50561	⅛"—No. 6 x 40 Screw (Rocker Plate Bearing)
	W —50547	Key Plate (Rear Guide)
	W —50607B	Spring (Push Button Slide)
	—45832	Push Button
	—45830	Dial Knob
	—45831A	Knob, V. C.
	—50549	Call Letter Sheet
	W —50551A	Celluloid Cover
	W —46260	Cabinet Assy. Complete
	—45814C	Cabinet
	—45829B	Cabinet Back
	W —45853	Grille Cloth
	W —45930C	Rubber Mounting Foot
	W —45931	Mounting Screw and Foot
	W —45852	Baffle Board
	—46260	Cabinet Assembly

©John F. Rider, Publisher

CROSLEY RADIO CORP.

MODEL 438
Schematic
Parts

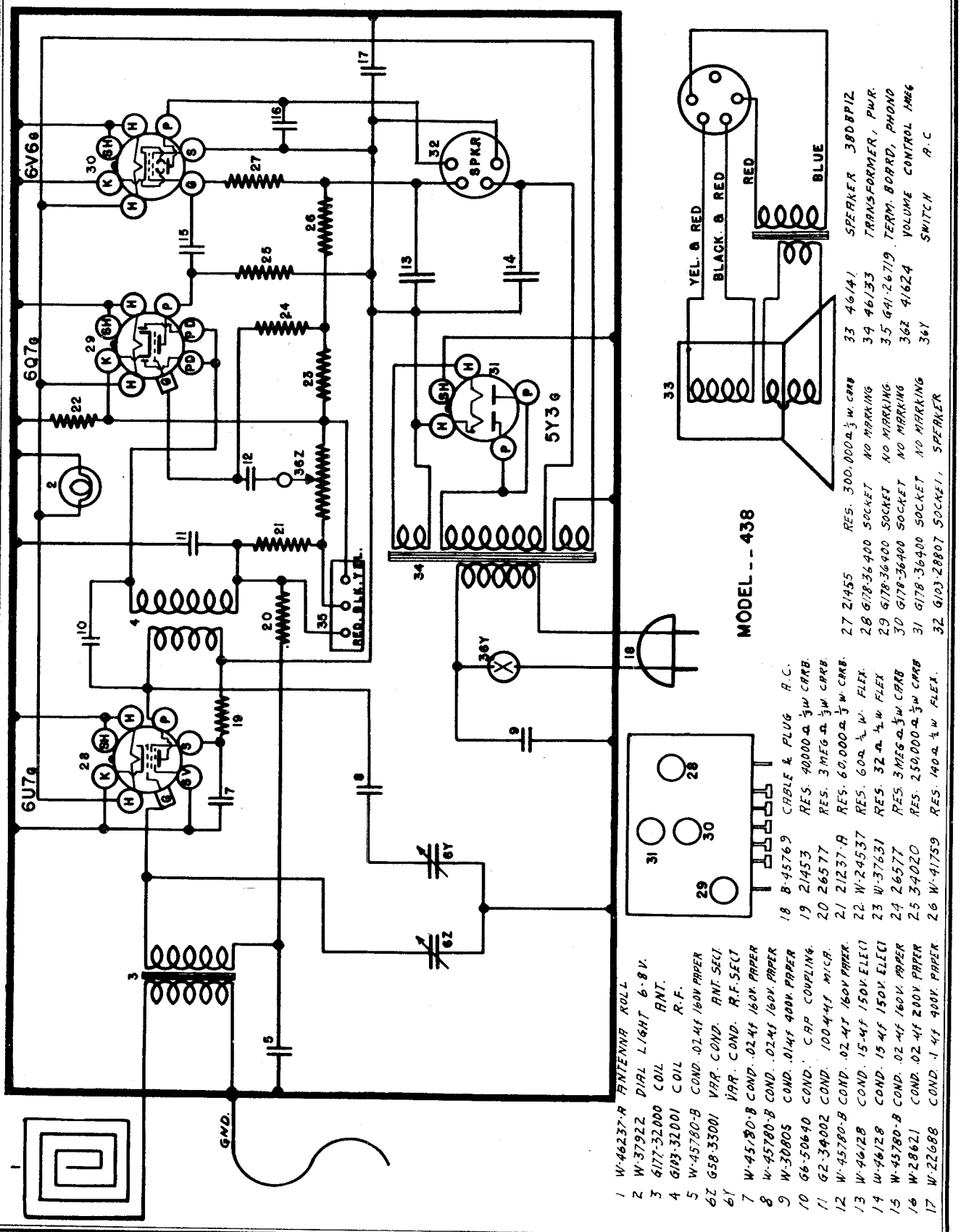

1	W-46237-A	ANTENNA ROLL				
2	W-37922	DIAL LIGHT 6·8 V.				
3	6177-32000	COIL	ANT.			
4	6103-32001	COIL	R.F.			
5	W-45780-B	COND. .02 MF 160 V PAPER				
6Z	638-33001	VAR. COND.	ANT. SEC.			
6Y		VAR. COND.	R.F. SEC.			
7	W-45780-B	COND. .02 MF 160 V. PAPER				
8	W-45780-B	COND. .02 MF 160 V. PAPER				
9	W-30805	COND. .01 MF 400 V. PAPER				
10	66-50640	COND.	CAP COUPLING			
11	62-34002	COND.	100 MF MICA			
12	W-45780-B	COND. .02 MF 160 V PAPER				
13	W-46128	COND. .15 MF 150 V. ELECT				
14	W-46128	COND. .15 MF 150 V. ELECT				
15	W-45780-B	COND. .02 MF 160 V. PAPER				
16	W-28621	COND. .02 MF 200 V PAPER				
17	W-22688	COND. .1 MF 400 V. PAPER				
18	B-45769	CABLE & PLUG	A.C.			
19	21453	RES. 40000 Ω ½ W CARB.				
20	26577	RES. 3 MEG Ω ½ W CARB				
21	21237-A	RES. 60,000 Ω ½ W CARB.				
22	W-24537	RES. 600 Ω ½ W. FLEX.				
23	W-37631	RES. 32 Ω ½ W FLEX				
24	26577	RES. 3 MEG Ω ½ W CARB				
25	34020	RES. 250,000 Ω ½ W CARB				
26	W-41759	RES. 140 Ω ½ W FLEX.				
27	21455	RES. 300,000 Ω ½ W. CARB				
28	6178-36400	SOCKET	NO MARKING			
29	6178-36400	SOCKET	NO MARKING			
30	6178-36400	SOCKET	NO MARKING			
31	6178-36400	SOCKET	NO MARKING			
32	6103-28807	SOCKET,	SPEAKER			
33	46141	SPEAKER	380P12			
34	46133	TRANSFORMER,	PWR.			
35	641-26719	TERM. BOARD,	PHONO			
362	41624	VOLUME CONTROL	1MEG			
36Y		SWITCH	A.C.			

©John F. Rider, Publisher

©John F. Rider, Publisher

These model chassis are identical except for station selector and associated parts as indicated in the Parts List. They are designed for AC operation and American and Foreign broadcast reception. The tuning range is divided into two bands as follows:

540-1725 Kilocycles or 555-173 Metres (American Broadcast Band)
5.9- 15.3 Megacycles or 51- 18 Metres (High Frequency or Foreign Band)

CIRCUIT DESCRIPTION

Five octal base glass tubes are employed in a superheterodyne circuit which consists of a combination oscillator-modulator tube, I-F amplifier, detector, audio amplifier and power supply. The 6Q7G tube serves as detector and 1st audio amplifier and supplies AVC voltage to the grids of the 6A8G and 6U7G tubes. The AVC voltage is taken from the A-F diode plate. The speaker field is located in the negative leg of the power supply. The starting bias for the 6A8G and 6U7G tubes is developed across a 75 ohm resistor, item 25. The bias voltage for the 6Q7G tube is developed across a 40 ohm resistor, item 24, and the bias voltage for the 6K6G output tube is developed across a 275 ohm resistor, item 23. Items 23, 24 and 25 are located between the speaker field and ground.

SOCKET VOLTAGES

The tube socket voltages are measured from the tube socket contacts to the chassis with a 1000 ohm per volt 500 volt d. c. voltmeter (except filaments) with the receiver in operating condition and no signal input. The filament voltages should be measured with an accurate low range a. c. voltmeter (approximately 0-10 volts). Readings may vary plus or minus 10% of values given.

TUBE SOCKET VOLTAGE READINGS

Tube	Function	H	P	S	K	G	Ga
6A8G	Oscillator-Modulator	6.3	160	115	0	-1.2	160
6U7G	I-F Amplifier	6.3	160	115	0	-1.2	—
6Q7G	Diode Detector & A-F Amplifier	6.3	80	—	2.5	-2.5	—
6K6G	Output	6.3	160	160	0	-5.0	—
5Y3G	Rectifier	5.0	—	—	225	—	—

Power output approximately 2 watts.
Power consumption approximately 40 watts at 117.5 volts.
Voltage drop across speaker field 36 volts.

50 CYCLE POWER TRANSFORMER ADJUSTMENT

Receivers equipped with a 50 cycle power transformer have a "high" and "low" voltage tap on the under side

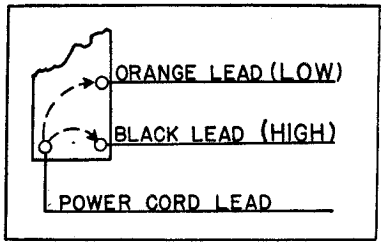

of the chassis. The "high" voltage lead (BLACK) and the "low" voltage lead (ORANGE) are connected to a terminal strip near the transformer.

The voltage range of the "low" tap of the 95-130 volt transformer is from 95 to 112½ volts and of the "high" tap is from 112½ to 130 volts. The range of the "low" tap of the 190-260 volt transformer is from 190 to 225 volts and of the "high" tap is from 225 to 260 volts.

The accompanying illustration shows the connections for changing from high to low or low to high line voltage. Note the "jumper" wire which is attached to the terminal at which one side of the power cord is attached. The other end of this jumper wire should be connected to the ORANGE or BLACK lead of the transformer primary, according to the line voltage the receiver is to be used on.

NOTE: Any change made in the power supply circuit of the receiver should be plainly stamped or otherwise permanently recorded on the rear of the chassis.

ALIGNMENT PROCEDURE

All the circuits in this receiver are very accurately adjusted at the factory and normally should need no further adjustment. However, if it is definitely known that an adjustment is necessary the circuits can best be properly aligned with the use of a modulated signal generator and output meter.

CONNECTING OUTPUT METER

Connect the output meter to P and S of the 6K6G output tube. Be certain that the meter is protected from d. c. by connecting a condenser (.1 mfd. or larger—not electrolytic) in series with one of the leads.

Tuning I-F Amplifier To 455 Kilocycles.

(a) Connect the output of the signal generator through a .02 mfd. condenser to the top cap of the 6A8G tube, leaving the tube's grid clip in place. Connect the ground lead from the signal generator to the "GND" terminal of the receiver. KEEP THE GENERATOR LEADS AS FAR AS POSSIBLE FROM THE GRID LEADS OF THE OTHER SCREEN GRID TUBES.

(b) Set the station selector so that the tuning condenser plates are completely out of mesh and turn the volume control knob to the right (ON).

(c) Turn the band selector switch to the left (Broadcast Band).

(d) Set the signal generator to 455 kilocycles.

(e) Adjust both trimmers located on top of the 2nd I-F transformer for maximum output. See Fig. 2.

(f) Adjust both trimmers located on the top of the 1st I-F transformer for maximum output.

ALWAYS USE THE LOWEST SIGNAL GENERATOR OUTPUT THAT WILL GIVE A REASONABLE READING ON THE OUTPUT METER.

Aligning The R-F Amplifier.

When aligning the R-F amplifier the output lead from the signal generator is connected to the antenna (A) terminal of the receiver. For the Broadcast Band a .00025 mfd. condenser should be connected in series with the output lead of the signal generator and for the High Frequency Band a 400 ohm carbon resistor should be used in place of the condenser.

(a) With the station selector adjusted so that the tuning condenser plates are completely out of mesh and the band selector switch set for the band being aligned, adjust the "OSC" shunt trimmer so that the MINIMUM CAPACITY SIGNAL ¶ (C), is heard. It is not necessary that the receiver tune through this signal.

(b) Adjust the station selector so that the SHUNT ALIGNMENT signal is tuned-in with maximum output. Then adjust the "ANT" shunt trimmer for maximum output. Readjust the station selector slightly so that the generaor signal is tuned-in with maximum output and check the adjustment of the "ANT" trimmer. DO NOT READJUST THE "OSC" TRIMMER.

NOTE 1: When shunt aligning the High Frequency Band care should be exercised so that the circuits will be aligned on the correct frequency rather than on the image frequency which is approximately 910 kilocycles less than the fundamental. To check on this, increase the output of the signal generator 10 times, or more, and try to tune-in the signal both at the generator frequency as indicated on the station selector dial and at approximately 910 kilocycles less than the correct frequency. If the circuits have been properly aligned the signal can be tuned-in at both positions but much stronger at the correct frequency.

NOTE 2: If at any time the H-F coils are replaced, it may be necessary to vary the inductance of the "OSC" coil by moving the cross-over turn of wire at the gap to make the set track at the 6 megacycle end. Moving the turn toward the short end of the coil will decrease the inductance and moving it toward the long end will increase the inductance. If the signal is weak at 6 megacycles, a similar slight change in the inductance of the "ANT" coil should bring up the signal strength. THIS IS A CRITICAL OPERATION AND SHOULD NOT BE DONE ON ANY SET UNLESS CHANGING COILS MAKES IT NECESSARY.

CHANGES IN PARTS LIST, SERVICE SUPPLEMENT NO. 163

Item 6, Part No. G136-32004 superseded by G138-32004.

Item 7, Part No. G137-32004 superseded by G139-32004.

Item 24, Part No. W-33012A superseded by W-23012A.

Item 36, Part No. 43569 Power Transformer—110 V., 50 cycles (Added).

Item 36, Part No. 43570 Power Transformer—220 V., 50 cycles (Added).

Part No. 40486, Pointer Screw (Added).

(C) SIGNAL INPUT FREQUENCIES

	Minimum Capacity	Shunt Alignment
American Broadcast Band	1725 Kilocycles	1400 Kilocycles
High Frequency Band	15400 Kilocycles	15000 Kilocycles

WAVE TRAP

Some chassis of this model are equipped with a wave trap for the purpose of eliminating interference from code stations which operate on a frequency of approximatly 455 kilocycles. This assembly is located on the underneath side of the chassis and consists of a coil, a fixed condenser and a trimmer condenser as illustrated by dotted lines in the Wiring diagram.

The wave trap should not be adjusted until all other adjustments have been made. To make the adjustment, feed a 455 kilocycle signal from the signal generator through a .00025 mfd. condenser into the antenna terminal of the receiver. With the band selector switch turned to the Broadcast Band position, the gang condenser open and the volume control full on, adjust the trimmer condenser on the wave trap for minimum output.

Should the interfering station be operating on a frequency of slightly more or less than 455 kilocycles, the exact frequency should be determined with the aid of the signal generator. Then, instead of feeding a 455 kilocycle signal into the receiver the exact frequency of the interfering signal should be used. If it is not possible to determine the exact frequency of the interfering signal the antenna may be attached to the receiver and the receiver tuned to the position where the interfering signal is most noticeable. Then adjust the wave trap for minimum interference.

CROSLEY RADIO CORP.

MODELS 517,547 Late
5517
Schematic, Socket

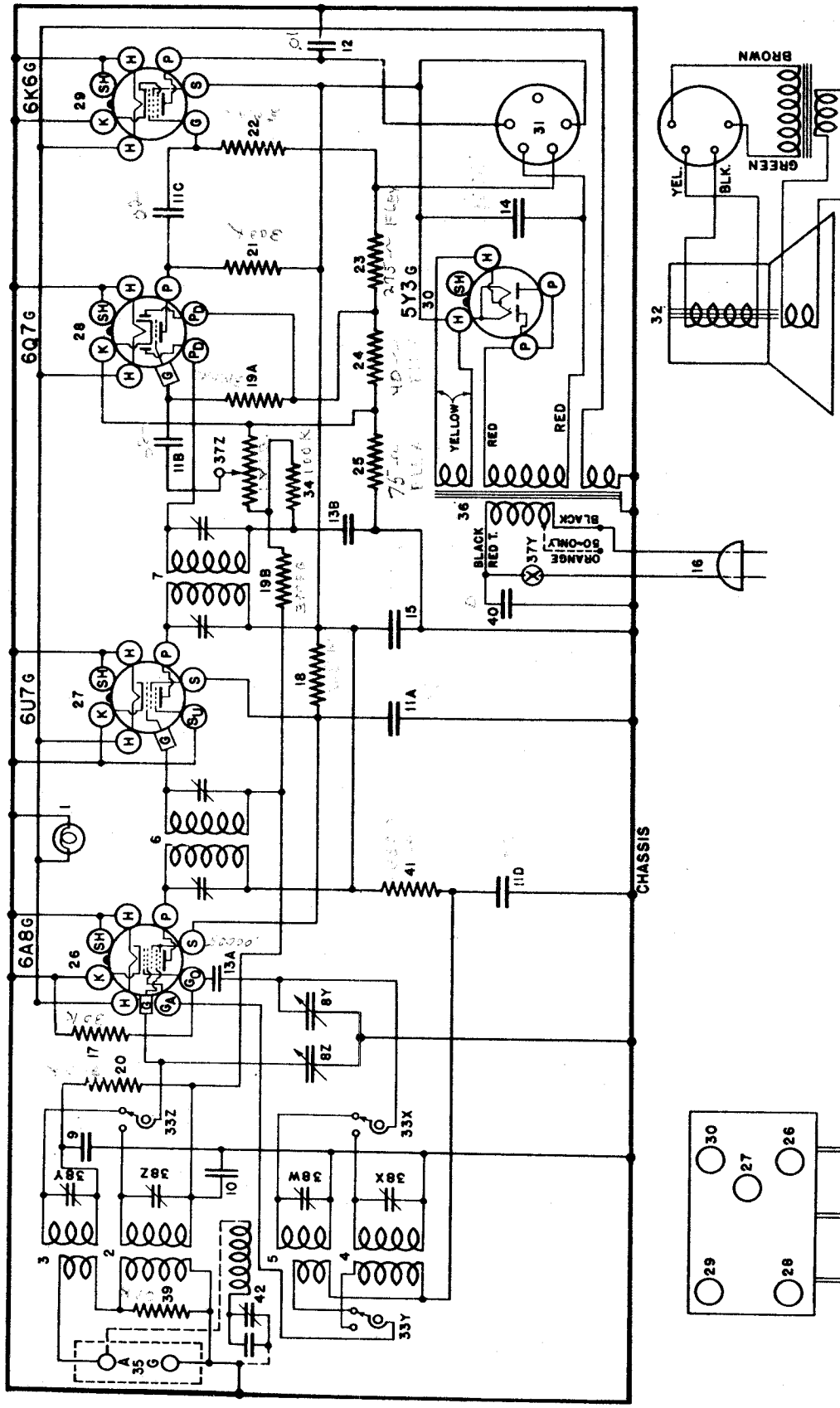

Chassis No. 5517
Chassis No. 517 above Serial No. 4032103
Chassis No. 547 above Serial No. 4338750

JULY, 1937

455 K.C. I.F.

MODELS. 517- 547
& 5517

©John F. Rider, Publisher

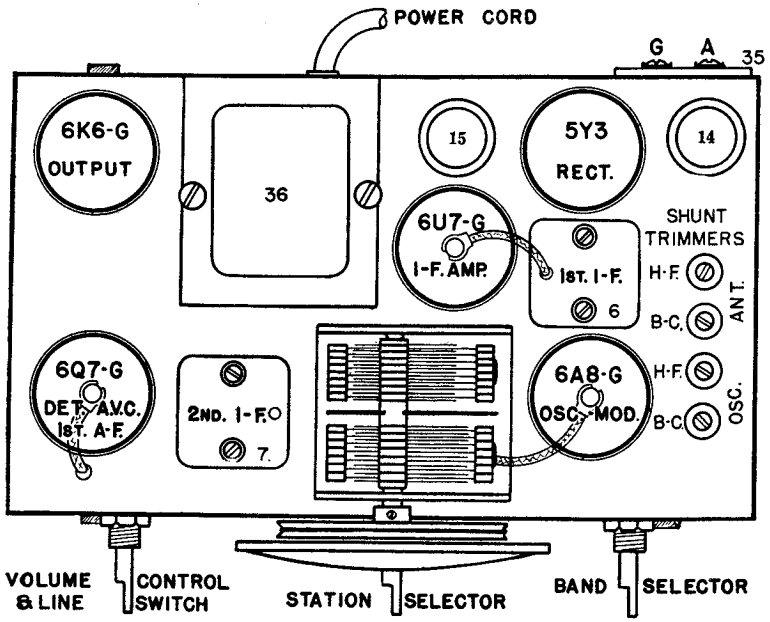

Fig. 2 Top View Models 517, 547 and 5517

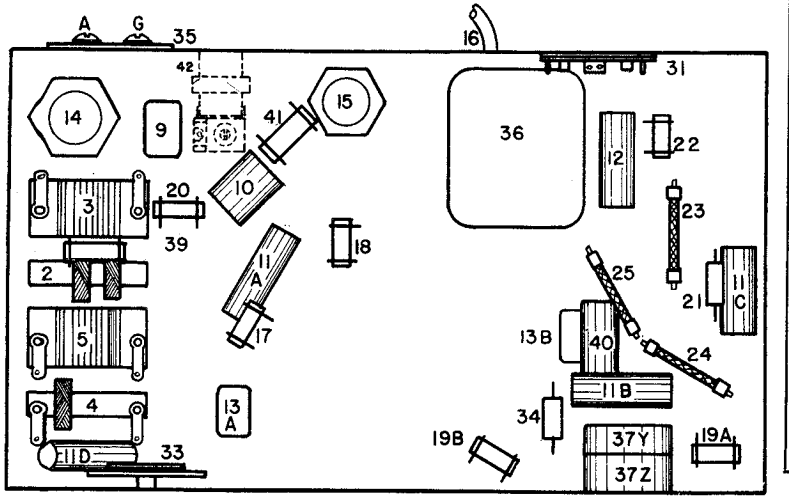

Fig. 3 Bottom View Models 517, 547 and 5517

PARTS LIST—MODEL 517, 547 and 5517

Figures in first column refer to parts in Diagrams.

Item No.	Part No.	Description
1	W —43567	Dial Light Bulb
	G2 —44252	Light Socket Assy.
2	G132—32000	Ant. Coil, 1725-540 Kc.
3	G133—32000	Ant. Coil, 6-15 Mc.
4	G132—32002	Osc. Coil, 1725-540 Kc.
5	G133—32002	Osc. Coil, 6-15 Mc.
6	G138—32004	1st I-F Assy., 455 Kc.
7	G139—32004	2nd I-F Assy., 455 Kc.
8	G37 —33001	2 Section Gang Cond. (517)
8	G38 —33001	2 Section Gang Cond. (547) Quiktune
	B —44286C	Dial Face (517)
	B —44290	Dial Face (547) Quiktune
	W —44001A	Face Support Ring (517)
	W —43778B	Face Support Ring (547) Quiktune
	W —43550A	Pointer (517 only)
	W —40486	Pointer Mtg. Screw (517)
	W —44285	Paper Dial Mask
	—44267	Metal Dial Mask
	B —43544D	Dial Mtg. Bracket
	G1 —43564	Pulley and Hub Assy.
	—44134	Drive Shaft
	W —43542B	Drive Shaft Bracket
	W —43549	Shaft Retaining Ring
	—41582	Drive Cable
	W —43561	Tension Spring (Cable)
	D —44781	Dial Face (Glass) (5517)
	W —44085B	Dial Mask (5517)
	C —44082E	Dial Glass Support (5517)
	W —44084A	Glass Support Ring (5517)
	W —44299	Pointer (5517)
	W —635C	Pointer Spacer (5517)
	W —44833	Pointer Mtg. Screw (5517)
	—41582	Drive Cord (18 inches) (5517)
9	G12 —34002	Condenser, .000500 Mf. Molded
10	W —36541	Condenser, .02 Mf. 160 V.
11ABCD	W —28621	Condenser, .02 Mf. 200 V.
12	W —23191A	Condenser, .01 Mf. 400 V.
13AB	G1 —34002	Condenser, .00025 Mf. Molded
14	W —44012	Condenser, 16 Mf. 250 V. Electrolytic
15	W —43450	Condenser, 16 Mf. 200 V. Electrolytic
16	B —44004	Power Cord and Plug
17	—33390	Resistor, 30,000 Ohm ¼W. Carb.
18	—24990	Resistor, 25,000 Ohm ¼W. Carb.
19AB	—36688	Condenser, 3 Megohm ¼W. Carb.
20	—21455	Resistor, 300,000 Ohm ¼W. Carb.
21	—35601	Resistor, 300,000 Ohm ½W. Ins. Carb.
22	—23785	Resistor, 500,000 Ohm ½W. Ins. Carb.
23	W —25937	Resistor, 275 Ohm ½W. Flex.
24	W —23012A	Resistor, 40 Ohm ½W. Flex.
25	W —25357	Resistor, 75 Ohm ¾W. Flex.
26	G156—36400	Socket, Type 6A8
27	G171—36400	Socket, Type 6U7
28	G160—36400	Socket, Type 6Q7
29	G172—36400	Socket, Type 6K6
30	G173—36400	Socket, Type 5Y3
	W —40911	Tube Shield
31	G103—28807	Speaker Socket
	W —43552	Speaker Plug Clamp
	—44681	Speaker Plug
	6K	Cab., Vertical Table (517)
	7KD	Cab., Vertical Table (517)
	7AC	Cab., Vertical Table (517) Superseding 6K and 7KD
	6FF	Cab., Horizontal Table (517) Export Only
	7H	Cab., Horizontal Table (517)
	7AE	Cab., Horizontal Table (517 and 547) Superseding 7H and 7HA
	7B	Cab., Horizontal Table (517) Moulded Front
	7M	Cab., Console (517 and 547)
	7MB	Cab., Console (5517)
	7MA	Cab., Console (517)
	6KA	Cab., Vertical Table (547)
	7AD	Cab., Vertical Table (547) Superseding 6KA
	7HA	Cab., Horizontal Table (547)
32	257BP11"B"	Speaker, Spec. No. 51-A-5 (Cab.—6K, 6KD, 7AC, 6KA and 7AD)
	—42927	V. C. and Cone Assy. for 257BP11"B"
	—41473	Output Trans. for 257BP11"B"
	—43539	Cone Mtg. Ring for 257BP11"B"
	257BP18"B"	Speaker, Spec. No. 51-A-8 (Cab.—7H, 7AE, 7HA and 7B)
	—42927	V. C. and Cone Assy. for 257BP18"B"
	—43539	Cone Mtg. Ring for 257BP18"B"
	—43986	Output Trans. for 257BP18"B"
	462CP11"M"	Speaker, Spec. No. 1-D-971 (Cab.—6FF)
	—40405	V. C. and Cone Assy. for 462CP11"M"
	—43989	Output Trans. for 462CP11"M"
	—43988	Field Coil for 462CP11"M"
	464BP15"M"	Speaker, Spec. No. 1-D-1017 (Cab.—7M, 7MA and 7MB)
	—43993	V. C. and Cone Assy. for 464BP15"M"
	—43995	Output Trans. for 464BP15"M"
	—43994	Field Coil for 464BP15"M"
33	W —43448A	Band Selector Switch
34	—35600	Resistor, 100,000 Ohm ¼W. Ins. Carb.
35	G1 —26719	Ant. and Gnd. Terminal Assy.
36	—43479	Power Trans., 110 V. 60 Cy.
	—43569A	Power Trans., 110 V. 50 Cy.
	—43480A	Power Trans., 110 V. 25 Cy.
	—43570A	Power Trans., 220 V. 50 Cy.
	—43481A	Power Trans., 220 V. 25 Cy.
37Z	—43449A	Volume Control, 1 Meg.
37Y		Line Switch
38	W —41247A	4 Section Shunt Trimmer Cond. Assy.
39	—22196	Resistor, 20,000 Ohm ¼W. Carb.
40	W —30805	Condenser, .01 Mf. 400 V.
41	—30137	Resistor, 3,500 Ohm ¼W. Carb.
	W —43553	Rubber Mtg. Foot (Chassis)
	W —44381B	Knob (3) 6K, 6FF, 7AC, 7AE, 7B, 7H, 7KD, 7MA, (7M-517)
	—44268A	Escutcheon—6FF, 7AC, 7AE, 7B, (7M-517)
	B —44226B	Escutcheon—7MB Cab.
	W —44380B	Knob (3) 7MB Cab.
	G1 —43724	Escutcheon (Quiktune) Assy. (547)
	W —43878A	Celluloid Disc. (Brown) (547)
	W —44956	Celluloid Disc (clear), package of 12
	W —43769	Arrow Head Screw (547)
	B —43898A	Escutcheon—7KD Cab.
42	G165—32004	Wave Trap
	W —44288	Escutcheon—7MA Cab.
	W —43625	Knob (2) 6KA, 7HA, 7AD, (7AE-547) Cab.
	W —43220	Knob (1) 6KA, 7HA, 7AD, (7AE-547) Cab.
	W —43939	Knob (3) 7M Cab. (547)

©John F. Rider, Publisher

Voltage

CROSLEY RADIO CORP.

MODEL 527
Schematic, Socket

SPECIFICATIONS

The Crosley Model 527 radio is a five-tube superheterodyne receiver designed for operation from batteries. The method of connecting the battery cable to the batteries shown on the Wiring Diagram. The batteries required are: one two-volt storage battery or air cell battery and three plug-in type 45 volt "B" batteries.

TUBES AND VOLTAGE LIMITS

The following table gives the functions of the tubes used, together with the voltage readings between the tube socket contacts and the negative side of the "A" battery circuit. Voltage readings should be taken with a 1000 ohm per volt, 250 volt voltmeter (except filaments) with receiver in operating condition and the volume control full on and no signal input. The filament voltages should be measured with an accurate low range D-C voltmeter (Approximately 0 to 10 volts). Voltage limits may vary plus or minus 10% of values given.

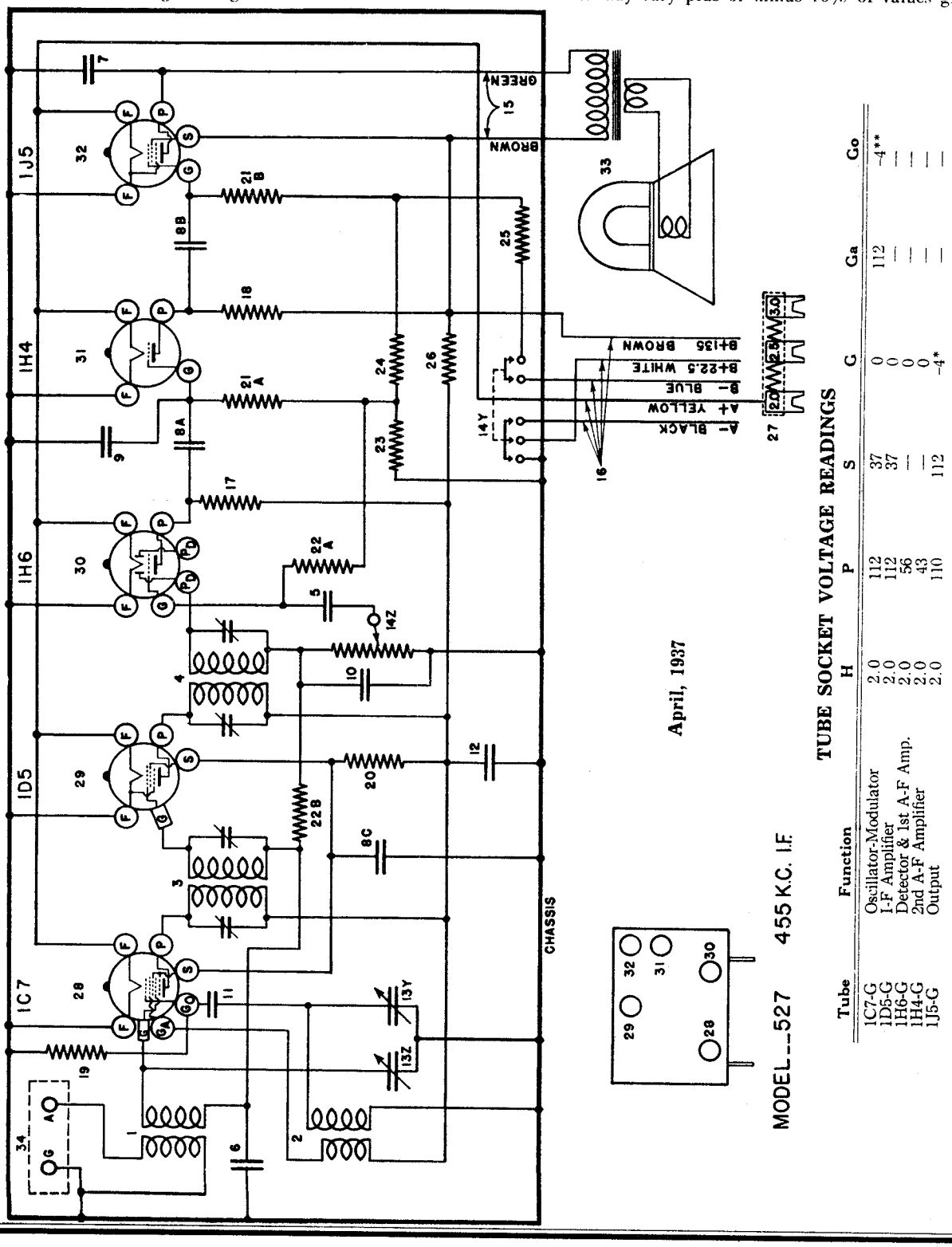

TUBE SOCKET VOLTAGE READINGS

Tube	Function	H	P	S	G	Ga	Go
1C7-G	Oscillator-Modulator	2.0	112	37	0	112	-4**
1D5-G	I-F Amplifier	2.0	112	37	0	—	—
1H6-G	Detector & 1st A-F Amp.	2.0	56	—	0	—	—
1H4-G	2nd A-F Amplifier	2.0	43	—	0	—	—
1J5-G	Output	2.0	110	112	-4*	—	—

Power Output approximately .5 Watt.
"A" Battery Drain approximately .42 Ampere at 2 Volts.
"B" Battery Drain approximately 16 Milliamperes at 135 Volts.
*Measured at Grid Terminal through 500,000 Ohm Grid Resistor.
**Measured at Go Terminal with Dial Set at approximately 1000 Kc.

©John F. Rider, Publisher

©John F. Rider, Publisher

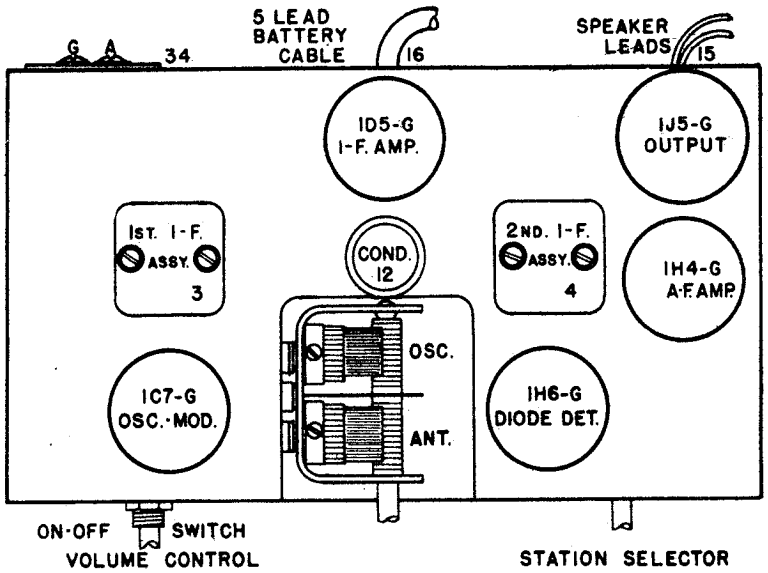

Fig. 2 Top View 527

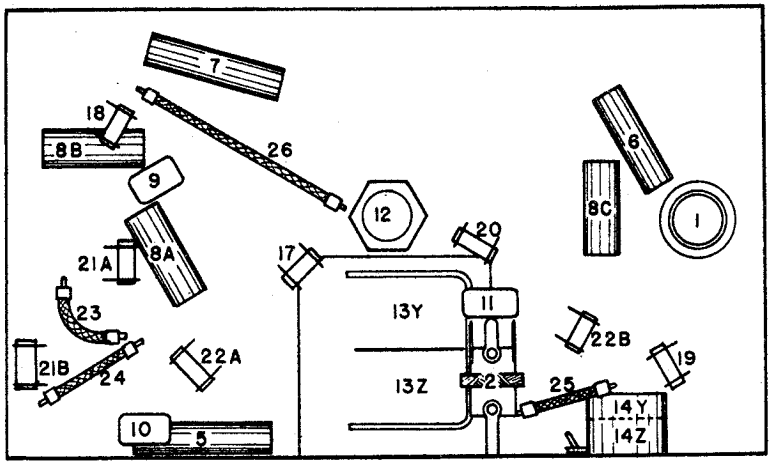

Fig. 3 Bottom View 527

ALIGNMENT PROCEDURE

All the circuits in this receiver are very accurately adjusted at the factory and normally should need no further adjustment. However, if it is definitely known that an adjustment is necessary the circuits can best be properly aligned with the use of a modulated signal generator and an output meter.

CONNECTING OUTPUT METER

Connect one terminal of the output meter to the plate and the other terminal to the screen of the 1J5G Output tube. Be sure the meter is protected from D.C. by connecting a condenser (.1 mfd. or larger—not electrolytic) in series with one of the leads.

1. Tuning I-F Amplifier To 455 Kilocycles.

(a) Connect the output of the signal generator through a .02 mfd., or larger condenser to the top cap of the 1C7G Osc-Mod tube, leaving the tube's grid clip in place. Connect the ground lead from the signal generator to the "GND" terminal of the receiver.

(b) Set the station selector so that the tuning condenser plates are completely out of mesh. Turn the volume control knob to the right (ON).

(c) Set the signal generator to 455 kilocycles.

(d) Adjust both trimmers located on top of the 2nd I-F transformer for maximum output. Fig. 2.

(e) Adjust both trimmers located on top of the 1st I-F transformer for maximum output.

(f) Check operations (d) and (e) for more accurate adjustments.

ALWAYS USE THE LOWEST SIGNAL GENERATOR OUTPUT THAT WILL GIVE A REASONABLE OUTPUT METER READING.

2. Aligning R-F Amplifier.

(a) Connect the output lead from the signal generator through a .00025 mfd. condenser to the "ANT" terminal of the receiver.

(b) Set the signal generator to 1400 kilocycles.

(c) Adjust the station selector to 140 on the dial.

(d) Adjust the trimmer located on the "OSC" section of the condenser gang for maximum output. Fig. 3.

(e) Adjust the trimmer located on the "Ant" section of the condenser gang for maximum output.

(f) Tune the station selector to the generator signal for maximum output.

(g) Repeat operation (e) for more accurate adjustment.

PARTS LIST—MODEL 527

Figures in first column refer to parts in Diagrams.

Item No.	Part No.	Description
1	G136—32000	Antenna Coil 540-1725 Kc.
2	G136—32002	Oscillator Coil 540-1725 Kc.
3	G146—32004	1st I-F Assembly, 455 Kc.
4	G147—32004	2nd I-F Assembly, 455 Kc.
5	W —30323	Condenser .01 Mf. 200 V.
6	W —37226	Condenser .02 Mf. 160 V.
7	W —28904	Condenser .004 Mf. 200 V.
8ABC	W —28621	Condenser .02 Mf. 200 V.
9	G3 —34002	Condenser 500 Mmf. (.0005)
10	G11 —34002	Condenser 175 Mmf. (.000175)
11	G2 —34002	Condenser 100 Mmf. (.0001)
12	W —41081	Condenser 16 Mf. 250 V.
13	G35 —33001	2 Sect. Var. Tuning Cond.
14Z }	—43854	Vol. Cont., 1 Meg.
14Y }		Battery Switch
15	MG11 —43859	Speaker Lead Assembly
16	B —43862	Battery Cable, 5 Lead
17	—23403	Resistor 150,000 Ohm ¼W.
18	—21237A	Resistor 60,000 Ohm ¼W.
19	—21875	Resistor 100,000 Ohm ¼W.
20	—37472	Resistor 50,000 Ohm ¼W.
21AB	—23785	Resistor 500,000 Ohm ¼W.
22AB	—26577	Resistor 3 Megohm ¼W.
23	W —41759	Resistor 140 Ohm ½W. Flex.
24	W —28106	Resistor 500 Ohm ½W. Flex.
25	W —22514	Resistor 750 Ohm ½W. Flex.
26	W —30960	Resistor 2600 Ohm 1½W. Flex.
27	W —41955A	Fil. Reg. Resistor 1.83 Ohm Tap, 1.1 Ohm
28	G1 —43900	Socket Type 1C7
29	G2 —43900	Socket Type 1D5
30	G3 —43900	Socket Type 1H6
31	G4 —43900	Socket Type 1H4
32	G5 —43900	Socket Type 1J5
33	31PJ3 "B"	Speaker—Spec. 61 PD-6
	—43666	Cone and V. C. Assembly
	—43668	Mtg. Ring (Cone)
	—43667	Output Trans.
34	G1 —26719	Ant. & Gnd. Terminal Assembly
	B —43863	Dial Face
	W —43787	Mask—Dial
	G2 —43564	Pulley and Hub Assembly
	W —43548A	Shaft—Drive
	W —43542A	Bracket—Drive Shaft Mtg.
	W —43778	Ring—Dial Glass Support
	W —43549	Ring—Retaining (Shaft)
	W —43550	Pointer
	W —43561	Spring—Cable Tension
	—41582	Cable—Drive
	—28651	"A—" Cable Marker
	—28650	"A+" Cable Marker
	—28647	"B+22" Cable Marker
	—28652	"B—" Cable Marker
	W —28645	"B+135" Cable Marker
	W —43320	Knob

CROSLEY RADIO CORP.

MODEL 557
Schematic
Socket

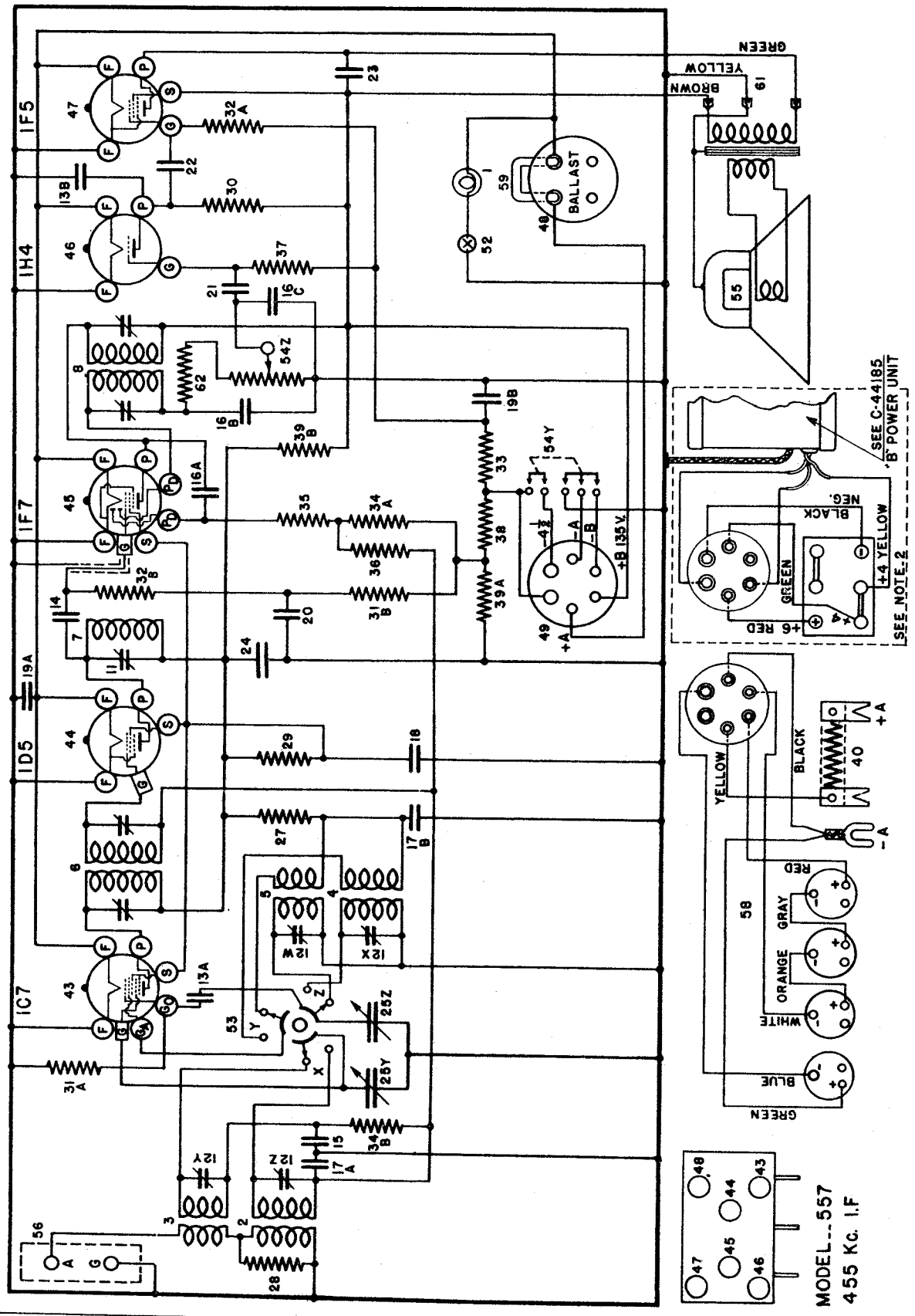

FIG. 1—WIRING DIAGRAM—MODEL 557

©John F. Rider, Publisher

MODEL 557
Alignment
Voltage, Data

CROSLEY RADIO CORP.

JULY, 1937 — CHASSIS MODEL 557

This model Crosley Radio is a five-tube, 2-band superheterodyne receiver. It is primarily designed for operation from a 2-volt "A" battery. However, it may be used with a 3-volt "A" battery if a Crosley W-44118 ballast tube is used in the socket provided, or it may be operated from a six-volt storage battery in conjunction with the Crosley Model 117 power supply unit. No "B" or "C" batteries are required if the six-volt battery and power supply unit are used.

The frequency ranges covered are from 540 to 1725 kilocycles in the American Broadcast Band and from 5800 to 15000 kilocycles in the High Frequency or Foreign Band.

Circuit Description

Five octal base glass tubes are employed in a superheterodyne circuit which consists of a combination oscillator-modulator tube, two stages of I-F amplification —the second transformer of which is single tuned, and two stages of audio amplification. The 1F7G tube serves as the 2nd I-F amplifier and detector and supplies delayed AVC voltage to the 1C7G and 1D5G tubes. The two flexible resistors, items 38 and 39A, supply bias voltage to the 1C7G, 1D5G and 1F7G tubes and also serve to reduce the "C" battery drain in proportion to the drop in "B" voltage caused by usage.

Battery Connections

If the receiver is to be operated from individual "A", "B" and "C" batteries, the "A" battery may be an air cell type, a two-volt storage battery or a three-volt dry "A" battery. Three plug-in type 45-volt "B" batteries and one plug-in type 4½-volt "C" battery are required.

CAUTION: Do not connect or disconnect batteries or insert or remove ballast tube with the "ON-OFF" switch in the "ON" position.

Fig. 2 shows the proper method of connecting the battery cable to the batteries. The YELLOW lead should be connected to the positive (+) terminal and the BLACK lead to the negative (—) terminal of the "A" battery. The resistor supplied on the YELLOW lead is to be used only if the "A" battery is an air cell type. The plug having two small pins and one large pin should be inserted in the 4½-volt "C" battery and the three plugs having three small pins are to be inserted in the "B" batteries.

If a three-volt battery is to be used, a Crosley W-44118 ballast tube should be used in the ballast tube socket on the receiver chassis. It will be necessary to pry the connector out of the ballast tube socket before the tube can be inserted. THE AIR CELL RESISTOR SHOULD NOT BE USED with three-volt "A" battery and ballast tube, nor with a two-volt storage battery.

Six-Volt Power Supply Unit

The Crosley Model 117 Power Supply Unit, Fig. 4, is designed to permit the Model 557 receiver to operate from a six-volt storage battery without the use of "B" and "C" batteries. It cannot be used with any other type 2-volt receiver without redesigning the receiver.

Dial Light

If it becomes necessary to replace the dial light bulb, use only part No. W-37188 which is rated at 6/100 ampere. Dial lights which use more current than this will reduce the life of the "A" battery.

TUBES AND VOLTAGE LIMITS

The following table gives the functions of the tubes used, together with the voltage readings between the tube socket contacts and the negative side of the "A" battery circuit. Voltage readings should be taken with a 1000 ohm per volt, 250 volt voltmeter (except filaments) with receiver in operating condition and the volume control full on and no signal input. The filament voltages should be measured with an accurate low range D-C voltmeter (approximately 0-10 volts). Voltage limits may vary plus or minus 10% of values given.

ALIGNMENT PROCEDURE

All the circuits in this receiver are very accurately adjusted at the factory and normally should need no further adjustment. However, if it is definitely known that an adjustment is necessary the circuits can best be properly aligned with the use of a modulated signal generator and an output meter.

CONNECTING OUTPUT METER

Connect one terminal of the output meter to the plate and the other terminal to the screen of the 1F5G output tube. Be certain that the meter is protected from D.C. by connecting a condenser (.1 mfd. or larger—not electrolytic) in series with one of the leads.

Tuning The I-F Amplifier To 455 Kilocycles.

(a) Connect the output of the signal generator through a .02 mfd., or larger, condenser to the top cap of the 1C7G oscillator-modulator tube, leaving the tube's grid clip in place. Connect the ground lead from the signal generator to the ground (G) terminal of the receiver. KEEP THE GENERATOR LEADS AS FAR AS POSSIBLE FROM THE GRID LEADS OF THE OTHER SCREEN GRID TUBES.

(b) Set the station selector so that the tuning condenser plates are completely out of mesh. Turn the volume control to the right (ON).

(c) Turn the band selector switch to the left (Broadcast Band).

(d) Set the signal generator to 455 kilocycles.

(e) Adjust both trimmers located on top of the 3rd I-F assembly for maximum output. (See Fig. 2 item 8).

(f) Adjust the 2nd I-F trimmer condenser, Fig. 2 item 11, for maximum output.

(g) Adjust both trimmers located on top of the 1st I-F assembly, item 6, for maximum output.

(h) Check operations (e), (f) and (g) for more accurate adjustments.

ALWAYS USE THE LOWEST SIGNAL GENERATOR OUTPUT THAT WILL GIVE A REASONABLE OUTPUT METER READING.

Aligning The R-F Amplifier.

When aligning the R-F amplifier the output lead from the signal generator is connected to the antenna (A) terminal of the receiver. For the Broadcast Band a .00025 mfd. condenser should be connected in series with the output lead of the signal generator and for the High Frequency Band a 400 ohm carbon resistor should be used in place of the condenser.

(a) With the station selector adjusted so that the tuning condenser plates are completely out of mesh and the band selector switch set for the band being aligned, adjust the "OSC" shunt trimmer so that the MINIMUM CAPACITY SIGNAL (c) is heard (it is not necessary that the receiver tune through this signal).

(b) Adjust the station selector so that the SHUNT ALIGNMENT signal is tuned-in with maximum output. Then adjust the "ANT" shunt trimmer for maximum output. Readjust the station selector slightly so that the generator signal is tuned-in with maximum output and check the adjustment of the "ANT" trimmer. DO NOT READJUST THE OSCILLATOR TRIMMER.

NOTE: When shunt aligning the High Frequency Band care should be exercised so that the circuits will be aligned on the correct frequency rather than on the image frequency which is approximately 910 kilocycles less than the fundamental. To check on this, increase the output of the signal generator 10 times, or more, and try to tune-in the signal both at the generator frequency as indicated on the station selector dial and at approximately 910 kilocycles less than the correct frequency. If the circuits have been properly aligned the signal can be tuned-in at both positions but much stronger at the correct frequency.

(C) SIGNAL INPUT FREQUENCIES

	Minimum Capacity Signal	Shunt Alignment Signal
American Broadcast Band	1725 Kilocycles	1400 Kilocycles
High Frequency Band	15500 Kilocycles	15000 Kilocycles

TUBE SOCKET VOLTAGE READINGS

Tube	Function	H	P	S	Go	Ga
1C7G	Oscillator-Modulator	2.0	120	54	Neg	84
1D5G	1st I-F Amplifier	2.0	120	54	—	—
1F7G	2nd I-F Amplifier, AVC and Detector	2.0	135	54	—	—
1H4G	1st A-F Amplifier	2.0	72	—	—	—
1F5G	Output	2.0	130	135	—	—

Power output approximately .5 watt.
"A" battery drain approximately .42 ampere—less dial light current.
"B" battery drain approximately 24 mils.
Power Supply Unit drain approximately 1.15 amperes at 4 volts.

©John F. Rider, Publisher

MODEL 117 S.P.U.
Layout, Connections

CROSLEY RADIO CORP.

MODEL 557
Socket, Trimmers
Layout

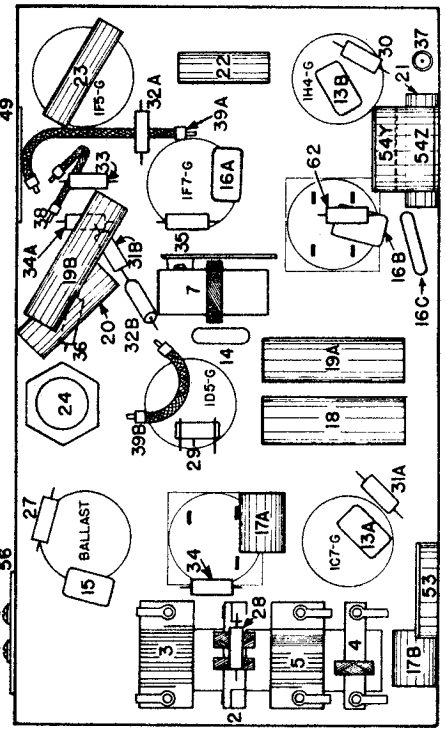

Fig. 3 Bottom View Model 557

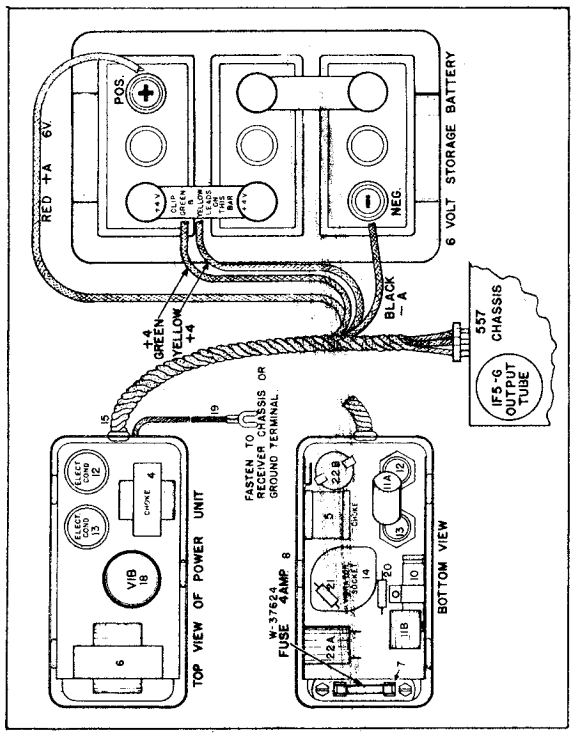

Fig. 4 Model 117 Six Volt Power Supply

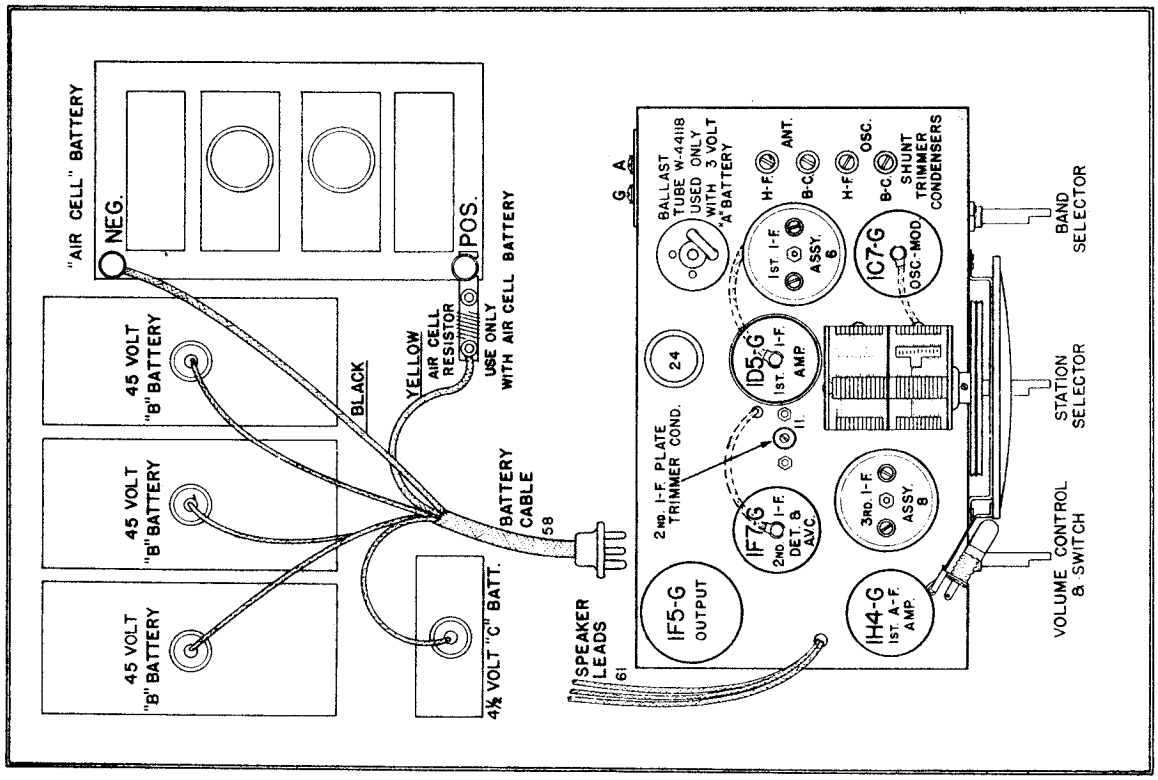

Fig. 2 Top View Model 557

©John F. Rider, Publisher

MODEL 557
Parts
MODEL 117 S.P.U.
Schematic

CROSLEY RADIO CORP.

PARTS LIST—MODEL 557

Figures in first column refer to parts in Diagrams.

Item No.	Part No.	Description
1	W —37188	Dial Light Bulb, 2 V. .06 Amp.
	G6 —27134	Light Brkt. Assy.
2	G132—32000	Ant. Coil, B. C.
3	G133—32000	Ant. Coil, H. F.
4	G132—32002	Osc. Coil, B. C.
5	G133—32002	Osc. Coil, H. F.
6	G151—32004	1st I-F Assy., 455 Kc.
7	G150—32004	2nd I-F Plate Coil Assy., 455 Kc.
8	G160—32004	3rd I-F Assy., 455 Kc.
9		NONE
10		NONE
11	W —44142A	2nd I-F Trimmer Condenser
12	W —41247A	4 Section Trimmer Condenser
13AB	G1 —34002	Condenser, .00025 Mf. Molded
14	G3 —34002	Condenser, .0005 Mf. Molded
15	G12 —34002	Condenser, .0005 Mf. Molded
16ABC	G2 —34002	Condenser, .0001 Mf. Molded
17AB	W —36541	Condenser, .02 Mf. 160 V.
18	W —29910A	Condenser, .25 Mf. 200 V.
19AB	W —37732	Condenser, .3 Mf. 160 V.
20	W —24049C	Condenser, .1 Mf. 200 V.
21	W —28621	Condenser, .02 Mf. 200 V.
22	W —27216	Condenser, .05 Mf. 200 V.
23	W —25435	Condenser, .003 Mf. 400 V.
24	W —44012	Condenser, 16 Mf. 250 V.
25	G37 —33001	2 Section Var. Tun. Cond.
	W —44414B	Glass Dial Face
	W —44285	Dial Mask (Paper)
	W —44267	Dial Mask (Metal Disc)
	W —44001A	Dial Support Ring
	B —44150A	Dial Support Bracket
	W —43550	Dial Pointer
	G1 —43564	Pulley Assy.
	W —44130	Drive Shaft
	W —43561	Cable Tension Spring
	—41582	Drive Cable - 17½ Inches
	W —40486	Pointer Mounting Screw
26		NONE
27	—36317	Resistor, 10,000 Ohm ¼W.
28	—36760	Resistor, 20,000 Ohm ¼W.
29	—33390	Resistor, 30,000 Ohm ¼W.
30	—36761	Resistor, 40,000 Ohm ¼W.
31AB	—36928	Resistor, 60,000 Ohm ¼W.
32AB	—36319	Resistor, 75,000 Ohm ¼W.
33	—35600	Resistor, 100,000 Ohm ¼W.
34AB	—35601	Resistor, 300,000 Ohm ¼W.
35	—36322	Resistor, 500,000 Ohm ¼W.
36	—35602	Resistor, 1 Megohm ¼W.
37	—35927	Resistor, 2 Megohm ¼W.
38	W —27503	Resistor, 1,400 Ohm ¾W. Flex.
39AB	W —23013	Resistor, 2,000 Ohm 1¼W. Flex.
40	G7 —22300	Resistor, .70 Ohm (Air Cell Series)
43	G1 —43900	Socket, Type 1C7
44	G2 —43900	Socket, Type 1D5
45	G7 —43900	Socket, Type 1F7
46	G4 —43900	Socket, Type 1H4
47	G6 —43900	Socket, Type 1F5
48	G95 —28807	Socket Ballast
	W —40911	Tube Shield
	G21 —28807	Socket (Power Cable)
49		NONE
50		NONE
51		NONE

Item No.	Part No.	Description
52	MG12—44140	Dial Light Switch and Brkt. Assy.
53	W —43448A	Band Selector Switch
54Z	—43854A	Volume Control (1 Meg.)
54Y		Batt. Switch
55	31PJ3 "A"	Speaker, Spec. No. R-6000, C8 and D2, 6"
	—41434	V. C. and Cone Assy. for 31PJ3 "A" Spkr.
	—41453	Output Trans. for 31PJ3 "A" Spkr.
	—41458	Cone Mounting Ring for 31PJ3 "A" Spkr.
	41PJ3 "A"	Speaker, Spec. No. R-8000, B2, 8"
	—41452	V. C. and Cone Assy. for 41PJ3 "A" Spkr.
	—41459	Cone Mounting Ring for 41PJ3 "A" Spkr.
G1	—41457	Output Trans. for 41PJ3 "A" Spkr.
	—26719	Ant. and Gnd. Terminal Assy.
56		NONE
57		Battery Cable
58	C —44149A	Ballast Sock. Jumper Wire
59	W —41968B	Ballast Tube
60	W —44118	Speaker Cable
61	W —44854	Resistor, 200,000 Ohm ¼W.
62	—35930	Cabinet—Table
	— 7D	Cabinet—Console
	— 7MA	Knob—Lower—Dial Light Switch
	W —44197	Knob—Upper—Station Selector
	W —41221	Knob—V. C. and Band Switch
	W —41605	Rubber Mtg. Foot
	W —43553	Escutcheon
	—44268A	Grille—for 7D Cab.
	—44195	Grille—for 7MA Cab.
	—43932	

Parts List For 117 Convertor

1	C —44133	Chassis Pan
2	C —44138	Case Body
3	W —44132A	Cover
4	G76 —24628	"B" Filter Choke
5	G23 —28067	"A" Filter Choke
6	G16 —32769	Power Transformer
7	G4 —33339	Fuse Panel Assy.
8	W —37624	Fuse (4 Amp.)
9		NONE
10	W —31632A	Condenser, .01 Mf. 1,000 V.
11AB	W —35936	Condenser, .05 Mf. 200 V.
12	W —44131B	Condenser, 20 Mf. 150 V.
13	W —44217	Condenser, 16 Mf. 200 V.
14	G92 —28807	Socket for Vibrator
15	C —44139	Cable and Plug
16AB	—34903	Batt. Clip—Pos.
17AB	—34904	Batt. Clip—Neg.
18	W —44145	Vibrator—4 Volt
	W —44446	Gnd. Clip—Vibrator
19	G122—34403	Bonded Lead
	W —3328	Grommet
20	—38915	Resistor, 100 Ohm ½W.
21	—38977	Resistor, 220 Ohm ½W.
22AB	W —50161	Condenser, .5 Mf. 120 V.
	W —44186	Cushion Strap
	W —44264	End Plate 1¼" x 3⅛" (2)

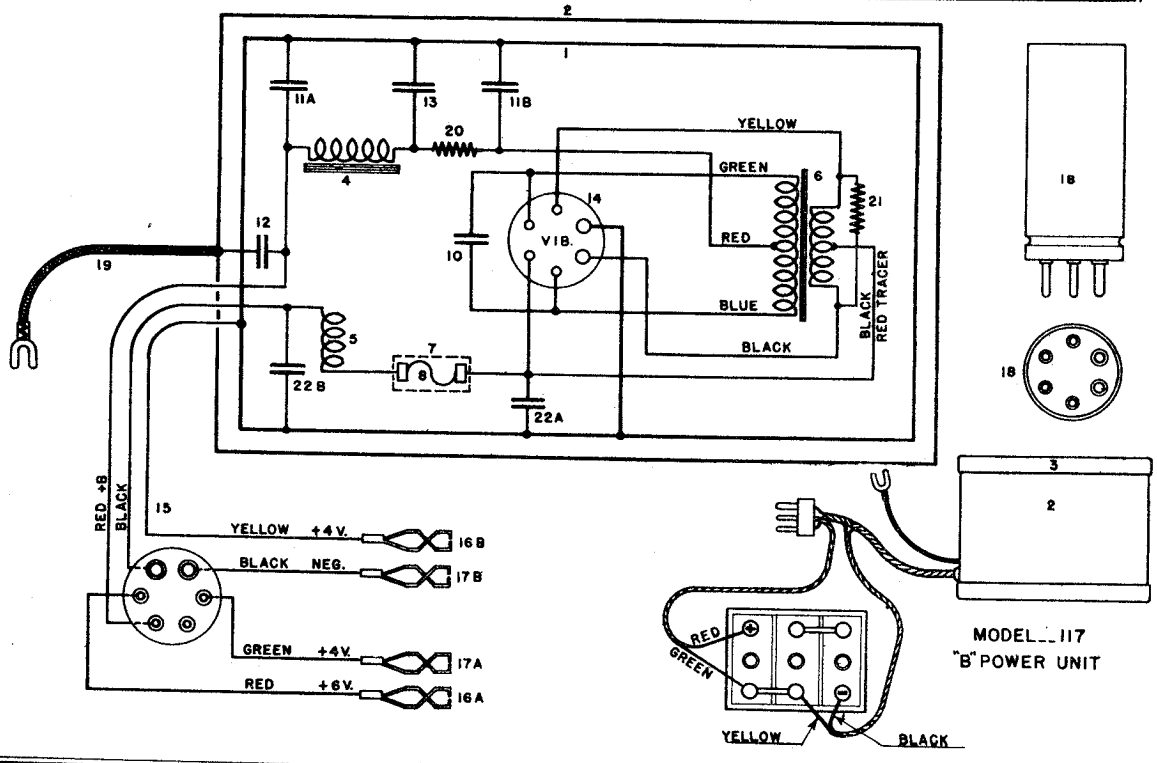

©John F. Rider, Publisher

MODEL 567
Schematic, Voltage
Socket, Data

CROSLEY RADIO CORP.

TUBE SOCKET VOLTAGE READINGS

Tube	Function	H	P	S	K	G	Ga
6A8G	Oscillator-Modulator	6.3	160	115	0	-1.2	160
6U7G	I-F Amplifier	6.3	160	115	0	-1.2	—
6Q7G	Diode Detector & A-F Amplifier	6.3	80	—	2.5	-2.5	—
6K6G	Output	6.3	160	160	0	-5.0	—
5Y3G	Rectifier	5.0	—	—	225	—	—

Power output approximately 2 watts.
Power consumption approximately 40 watts at 117.5 volts.
Voltage drop across speaker field 35 volts.

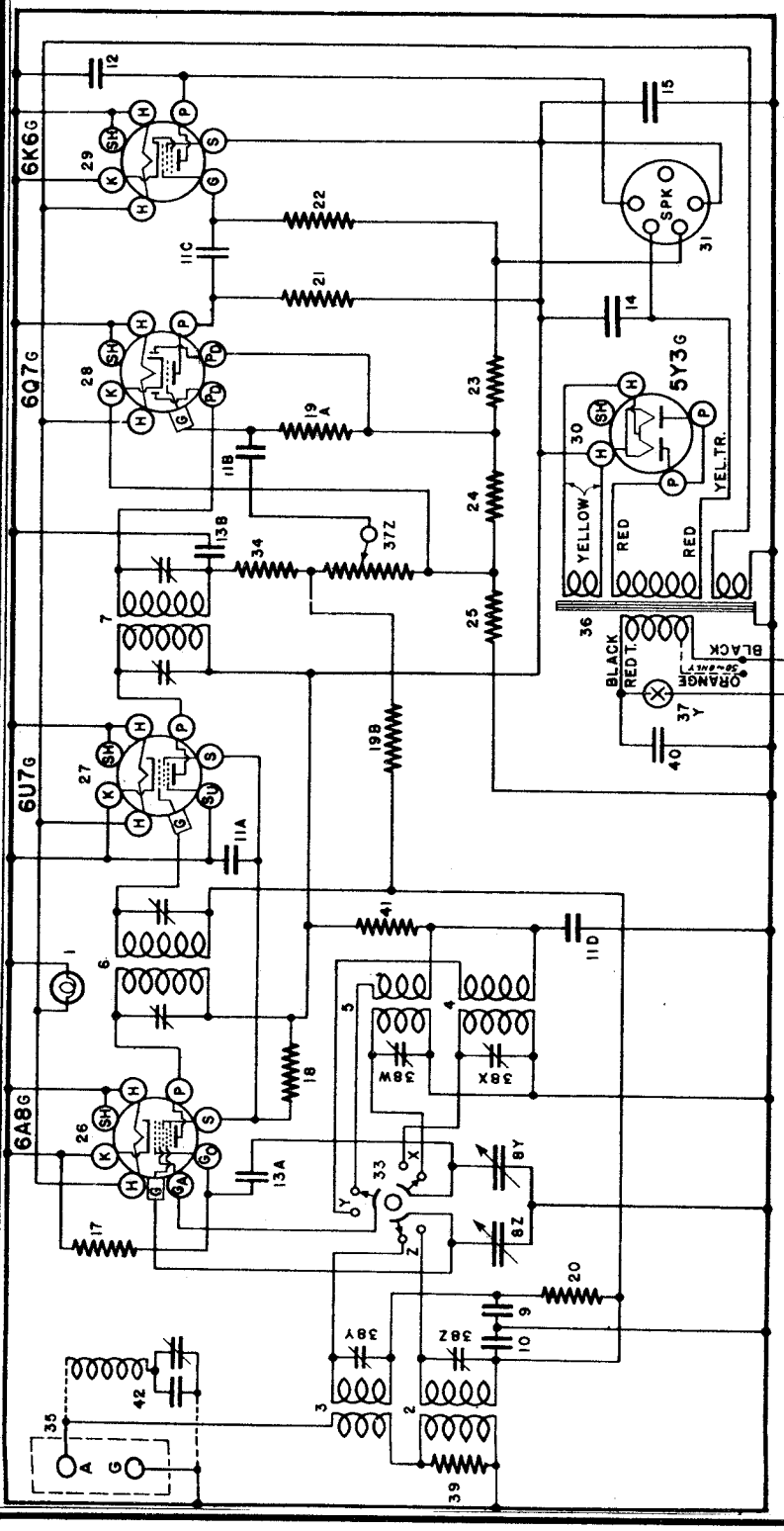

MODEL 567

455 Kc. I.F. WAVE TRAP

Some chassis of this model are equipped with a wave trap for the purpose of eliminating interference from code stations which operate on a frequency of approximately 455 kilocycles. This assembly is located on the underneath side of the chassis and consists of a coil, a fixed condenser and a trimmer condenser as illustrated by dotted lines in the Wiring diagram.

The wave trap should not be adjusted until all other adjustments have been made. To make the adjustment, feed a 455 kilocycle signal from the signal generator through a .00025 mfd. condenser into the antenna terminal of the receiver. With the band selector switch turned to the Broadcast Band position, the gang condenser open and the volume control full on, adjust the trimmer condenser on the wave trap for minimum output.

Should the interfering station be operating on a frequency of slightly more or less than 455 kilocycles, the exact frequency should be determined with the aid of the signal generator. Then, instead of feeding a 455 kilocycle signal into the receiver the exact frequency of the interfering signal should be used. If it is not possible to determine the exact frequency of the interfering signal the antenna may be attached to the receiver and the receiver tuned to the position where the interfering signal is most noticeable. Then adjust the wave trap for minimum interference.

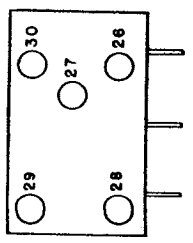

JULY, 1937

©John F. Rider, Publisher

©John F. Rider, Publisher

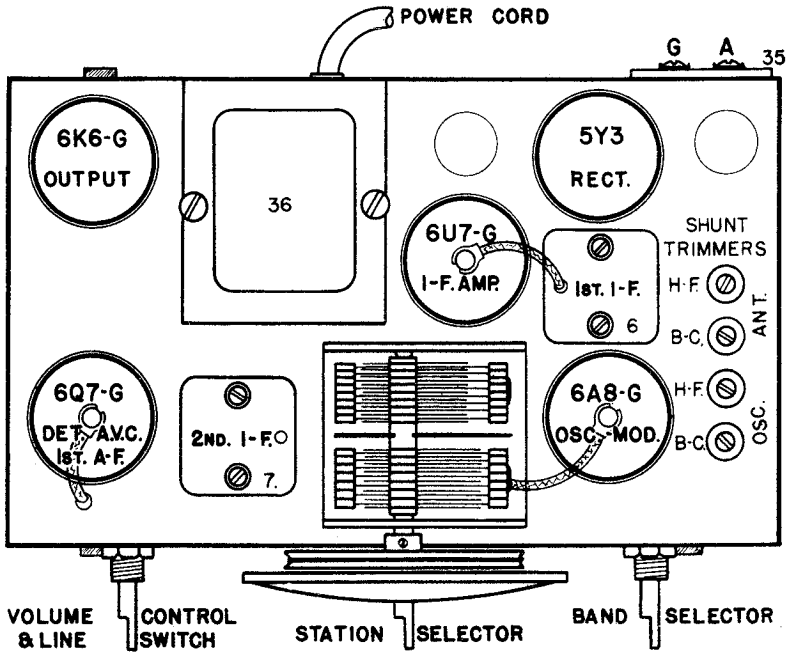

Fig. 2 Top View Model 567

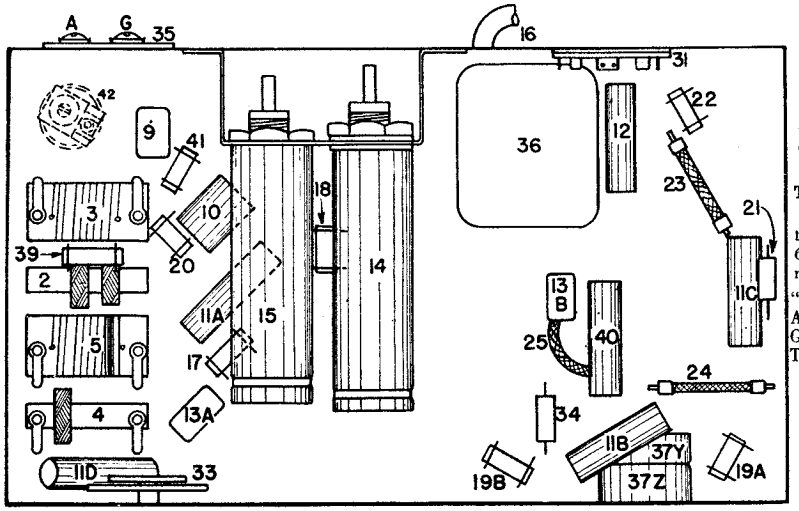

Fig. 3 Bottom View Model 567

50 CYCLE POWER TRANSFORMER ADJUSTMENT

Receivers equipped with a 50 cycle power transformer have a "high" and "low" voltage tap on the under side of the chassis. The "high" voltage lead (BLACK) and the "low" voltage lead (ORANGE) are connected to a terminal strip near the transformer.

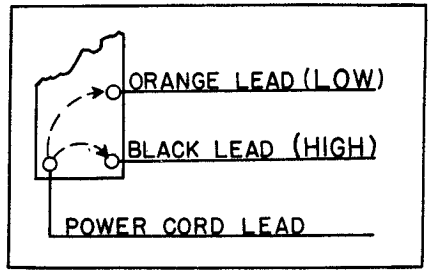

The voltage range of the "low" tap of the 95-130 volt transformer is from 95 to 112½ volts and of the "high" tap is from 112½ to 130 volts. The range of the "low" tap of the 190-260 volt transformer is from 190 to 225 volts and of the "high" tap is from 225 to 260 volts.

The accompanying illustration shows the connections for changing from high to low or low to high line voltage. Note the "jumper" wire which is attached to the terminal at which one side of the power cord is attached. The other end of this jumper wire should be connected to the ORANGE or BLACK lead of the transformer primary, according to the line voltage the receiver is to be used on.

NOTE: Any change made in the power supply circuit of the receiver should be plainly stamped or otherwise permanently recorded on the rear of the chassis.

CONNECTING OUTPUT METER

Connect the output meter to P and S of the 6K6G output tube. Be certain that the meter is protected from d. c. by connecting a condenser (.1 mfd. or larger—not electrolytic) in series with one of the leads.

Tuning I-F Amplifier To 455 Kilocycles.

(a) Connect the output of the signal generator through a .02 mfd. condenser to the top cap of the 6A8G tube, leaving the tube's grid clip in place. Connect the ground lead from the signal generator to the "GND" terminal of the receiver. KEEP THE GENERATOR LEADS AS FAR AS POSSIBLE FROM THE GRID LEADS OF THE OTHER SCREEN GRID TUBES.

(b) Set the station selector so that the tuning condenser plates are completely out of mesh and turn the volume control knob to the right (ON).

(c) Turn the band selector switch to the left (Broadcast Band).

(d) Set the signal generator to 455 kilocycles.

(e) Adjust both trimmers located on top of the 2nd I-F transformer for maximum output. See Fig. 2.

(f) Adjust both trimmers located on the top of the 1st I-F transformer for maximum output.

ALWAYS USE THE LOWEST SIGNAL GENERATOR OUTPUT THAT WILL GIVE A REASONABLE READING ON THE OUTPUT METER.

Aligning The R-F Amplifier.

When aligning the R-F amplifier the output lead from the signal generator is connected to the antenna (A) terminal of the receiver. For the Broadcast Band a .00025 mfd. condenser should be connected in series with the output lead of the signal generator and for the High Frequency Band a 400 ohm carbon resistor should be used in place of the condenser.

(a) With the station selector adjusted so that the tuning condenser plates are completely out of mesh and the band selector switch set for the band being aligned, adjust the "OSC" shunt trimmer so that the MINIMUM CAPACITY SIGNAL ¶ (C), is heard. It is not necessary that the receiver tune through this signal.

(b) Adjust the station selector so that the SHUNT ALIGNMENT signal is tuned-in with maximum output. Then adjust the "ANT" shunt trimmer for maximum output. Readjust the station selector slightly so that the generaor signal is tuned-in with maximum output and check the adjustment of the "ANT" trimmer. DO NOT READJUST THE "OSC" TRIMMER.

NOTE 1: When shunt aligning the High Frequency Band care should be exercised so that the circuits will be aligned on the correct frequency rather than on the image frequency which is approximately 910 kilocycles less than the fundamental. To check on this, increase the output of the signal generator 10 times, or more, and try to tune-in the signal both at the generator frequency as indicated on the station selector dial and at approximately 910 kilocycles less than the correct frequency. If the circuits have been properly aligned the signal can be tuned-in at both positions but much stronger at the correct frequency.

NOTE 2: If at any time the H-F coils are replaced, it may be necessary to vary the inductance of the "OSC" coil by moving the cross-over turn of wire at the gap to make the set track at the 6 megacycle end. Moving the turn toward the short end of the coil will decrease the inductance and moving it toward the long end will increase the inductance. If the signal is weak at 6 megacycles, a similar slight change in the inductance of the "ANT" coil should bring up the signal strength. THIS IS A CRITICAL OPERATION AND SHOULD NOT BE DONE ON ANY SET UNLESS CHANGING COILS MAKES IT NECESSARY.

(C) SIGNAL INPUT FREQUENCIES

	Minimum Capacity	Shunt Alignment
American Broadcast Band	1725 Kilocycles	1400 Kilocycles
High Frequency Band	15400 Kilocycles	15000 Kilocycles

MODEL 567
MODEL 577
Parts Lists

CROSLEY RADIO CORP.

PARTS LIST—MODEL 567

Item No.	Part No.	Description
1	W —43567	Dial Light, 6-8 V.
	G2 —44252	Socket Assy. Dial Light
2	G132—32000	Ant. Coil, B. C.
3	G133—32000	Ant. Coil, H-F.
4	G132—32002	Osc. Coil, B. C.
5	G133—32002	Osc. Coil, H-F.
6	G138—32004	1st I-F Assy.
7	G139—32004	2nd I-F Assy.
	W —36139A	Dual I-F Trimmer
8	G37 —33001	2 Section Gang Cond.
	B —44286C	Dial Face (Glass)
	—44267	Dial Mask (Metal)
	W —44285	Dial Mask (Paper)
	B —43544D	Support—Dial Glass
	W —43550A	Pointer
	W —40486	Screw—Pointer Mtg.
	W —44403	Ring—Dial Glass Support
	G1 —43564	Pulley and Hub Assy.
	W —43542B	Bracket—Drive Shaft
	W —44134	Drive Shaft
	W —43549	Retaining Spring (Shaft)
	—41582	Drive Cord
	W —43561	Spring—Cord Tension
9	G12 —34002	Condenser, 500 Mmf. Molded
10	W —36541	Condenser, .02 Mf. 160 V.
11A	W —28621	Condenser, .02 Mf. 200 V.
11B	W —28621	Condenser, .02 Mf. 200 V.
11C	W —28621	Condenser, .02 Mf. 200 V.
11D	W —28621	Condenser, .02 Mf. 200 V.
12	W —34647	Condenser, .006 Mf. 400 V.
13A	G1 —34002	Condenser, 250 Mmf. Molded
13B	G1 —34002	Condenser, 250 Mmf. Molded
14	W —44012	Condenser, 16 Mf. 250 V.
15	W —44013	Condenser, 16 Mf. 200 V.
16	B —44004	Cord and Plug
17	—33390	Resistor, 30,000 Ohm ¼W.
18	—24990	Resistor, 25,000 Ohm ¼W.
19A	—26577	Resistor, 3 Megohm ¼W.
19B	—26577	Resistor, 3 Megohm ¼W.
20	—21455	Resistor, 300,000 Ohm ¼W.
21	—35601	Resistor, 300,000 Ohm ¼W.
22	—23785	Resistor, 500,000 Ohm ¼W.
23	W —25937	Resistor, 275 Ohm ½W.
24	W —23012A	Resistor, 40 Ohm ½W.
25	W —25357	Resistor, 75 Ohm ¾W.
26	G156—36400	Socket, Type 6A8
27	G171—36400	Socket, Type 6U7
28	G160—36400	Socket, Type 6Q7
29	G172—36400	Socket, Type 6K6
30	G173—36400	Socket, Type 5Y3
31	G103—28807	Socket Speaker
	W —40911	Tube Shield
32	257BP11"U"	Speaker, Spec. 5-B-5
	—44537	V. C. and Cone Assy.—257BP11"U"
	—44538	Output Trans.—257BP11"U"
	257BP11"B"	Speaker, Spec. 51-A-5
	—42927	V. C. and Cone Assy.—257BP11"B"
	—41473	Output Trans.—257BP11"B"
	—44681	Speaker Plug
33	W —43448A	Band Switch
34	—35600	Resistor, 100,000 Ohm ¼W.
35	G1 —26719	Ant. and Gnd. Terminal Assy.
36	—43479	Power Trans., 110 V. 60 Cy.
	—43569A	Power Trans., 110 V. 50 Cy.
	—43570A	Power Trans., 220 V. 50 Cy.
	—43480A	Power Trans., 110 V. 25 Cy.
	—43481A	Power Trans., 220 V. 25 Cy.
37	—43449A	Vol. Cont. (1 Meg.) and Switch
38	W —41247A	4 Section Shunt Trimmer Assy.
39	—22196	Resistor, 20,000 Ohm ¼W.
40	W —30805	Condenser, .01 Mf. 400 V.
41	—30137	Resistor, 3,500 Ohm ¼W.
	—7BB	Cabinet (Black Body)
	—7BC	Cabinet (Brown Body)
	—7BD	Cabinet (Wood Grain Body)
	—44106B	Cover (Used on 7BC and 7BD) Black
	W—44044A-FS1	Foot—Black
	—44045C	Cover (Used on 7BB) Red
	W—44044A-FS46	Foot—Red
	—44552	Knob (Black)
	—44268A	Escutcheon
	W —44436	Felt Pad (Escutcheon) (4 Req.)
	W —44015A	Chassis Support Brkt. (Upper)
	W —44016	Chassis Support Brkt. (Lower)
	W —44041A	Sound Baffle
	MG44—44026	Grille Cloth Assy.—7BB
	MG43—44026	Baffle Assy.—7BB
	MG42—44026	Grille Cloth Assy.—7BC and 7BD
	MG41—44026	Baffle Assy.—7BC and 7BD
42	G164—32004	Wave Trap

PARTS LIST—MODEL 577

Item	Part No.	Description
1	W —31765B	Antenna Roll
2	G 16—29535	"B" Filter Choke (Before Serial No. 1417951)
3	G144—32000	Ant. Coil
4	G147—32002	Osc. Coil
5	G158—32004	1st I-F Assy.
6	G159—32004	2nd I-F Coil Assy.
7A	W —43280	Condenser 25 Mf. 150 V.
7B	W —43280	Condenser 25 Mf. 150 V.
8A	G 1—34002	Condenser .00025 Mf. Molded
8B	G 1—34002	Condenser .00025 Mf. Molded
9	G 3—34002	Condenser .0005 Mf. Molded
10A	W —28621	Condenser .02 Mf. 200 V.
10B	W —28621	Condenser .02 Mf. 200 V.
10C	W —28621	Condenser .02 Mf. 200 V.
11	W —32380	Condenser .05 Mf. 200 V.
12	W —23615	Condenser .05 Mf. 400 V.
13	W —30323	Condenser .01 Mf. 200 V.
14	W —34712	Condenser .25 Mf. 160 V.
15	W —35936	Condenser .05 Mf. 160 V.
16		
17	W —44142	2nd I-F Trimmer
	W —28129	Spacer (Mtg. W-44142)
18	G 43—33001	2 Sect. Var. Tuning Cond.
	B —44400C	Dial Face (Glass)
	B —44307A	Dial Glass Brkt.
	W —44285	Dial Mask (Paper)
	—44267	Dial Mask (Metal)
	W —44001A	Dial Support Ring
	W —44306	Drive Shaft Bracket
	W —44918	Drive Shaft
	W —43549	Ret. Ring (Shaft)
	G 3—43564	Pulley & Hub Assy.
	—41582	Drive Cord
	W —43561	Drive Cord Spring
	W —43550A	Pointer
	W —40486	Screw FS20 Pointer Mtg.
19	B —44192	Power Cord & Plug
	B —30772B	Power Cord & Plug for adapting set to 220 V. Power Sup.
20	W —44337	Dial Light 6-8 V.
	G 6—27134	Socket Assy. Dial L.
21	—35928	Resistor 60,00 Ohm ¼ W.
22	—21453	Resistor 40,000 Ohm 1/3 W.
23A	—21455	Resistor 300,000 Ohm 1/3 W.
23B	—21455	Resistor 300,000 Ohm 1/3 W.
24	—34883	Resistor 2 Megohm 1/3 W.
25	—21454	Resistor 1. Megohm 1/3 W.
26	—33490	Resistor 10. Megohm 1/3 W.
27A	—23785	Resistor 500,000 Ohm 1/3 W.
27B	—23785	Resistor 500,000 Ohm 1/3 W. (After Serial No. 1417950)
28	W —21964	Resistor 165 Ohm ½ W. Flex.
29	W —44396	Resistor 40 Ohm 3½ W. Flex.
30	G156—36400	Socket Type 6A8
31	G171—36400	Socket Type 6U7
32	G160—36400	Socket Type 6Q7
33	G161—36400	Socket Type 25A6
34	G162—36400	Socket Type 25Z6
	W —40911	Tube Shield
35	—255BL6"Q"	Speaker Spe. No. 23393 (2000 Ohm Field) Used Before Serial No. 1417951.
	—43464	V. C. & Cone Assy. (Used On)
	—43465	Output Transformer (255BL6)
	—43466	Cone Mtg. Ring (273BL6 'Q' Only)
	B —44374A	Baffle Board
	—273BL6"Q"	Speaker Spec. No. 26253 (525 Ohm Field) Used After Serial No. 1417950
36Z, 36Y	—43449	Vol. Control ½ Meg. On-Off Switch
37	G169—32004	Wave Trap Assy.
38	G 5—34002	Condenser .00005 Mf. Molded
	—7 DC	Cabinet
	—44330	Grille Cloth
	—44268A	Escutcheon
	W —44381B	Knob
	B —44373A	Cabinet Back

©John F. Rider, Publisher

MODEL 448
Schematic
Parts

CROSLEY RADIO CORP.

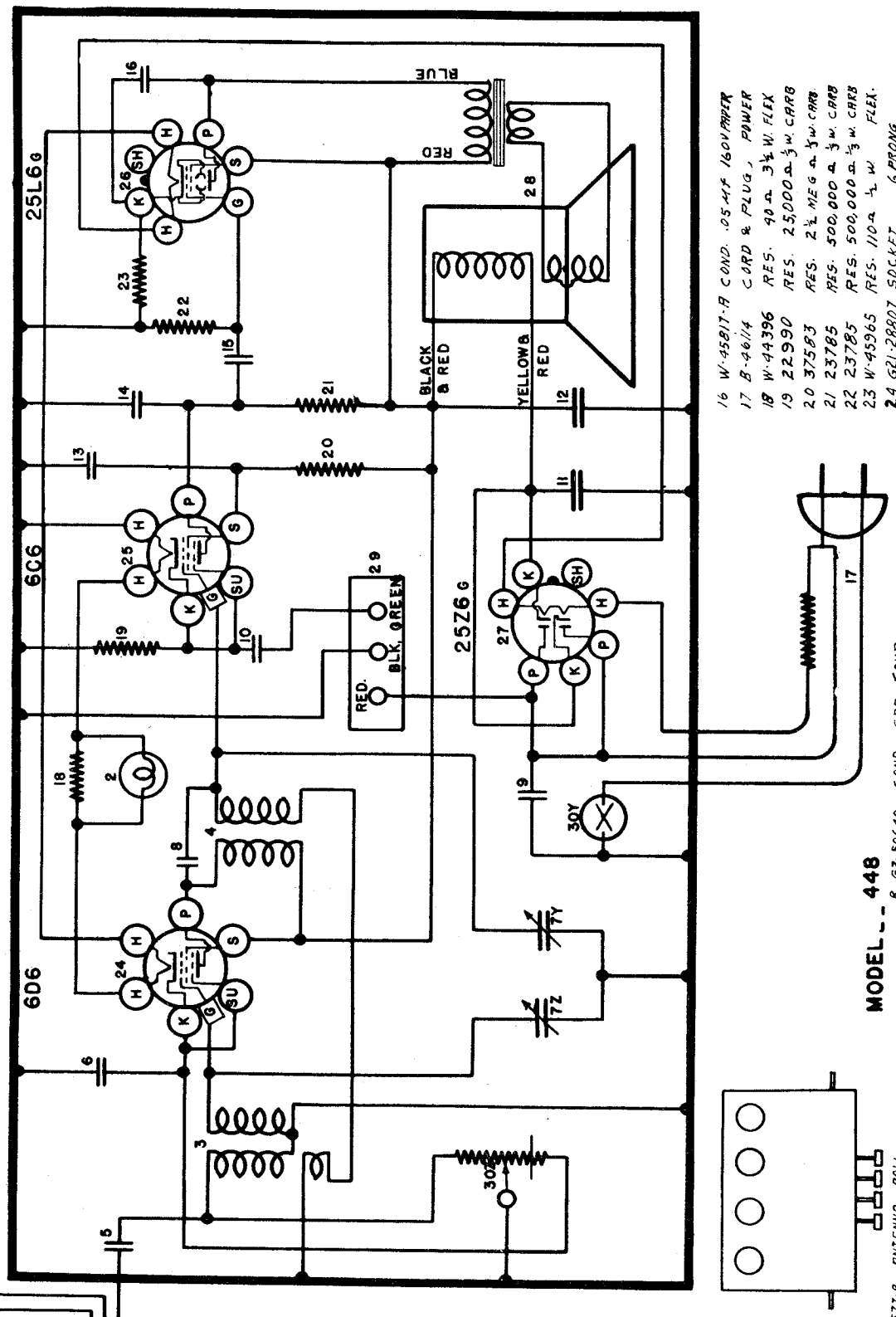

1	W-45577-B	ANTENNA ROLL	
2	W-44337	DIAL LIGHT	6.8V
3	G180-32A00	COIL	ANT
4	G104-32001	COIL	R.F
5	W-45780-B	COND. .02 MF	160V PAPE
6	W-45780-B	COND .02 MF	160V PAPE
7Z	G51-33001	VAR COND.	ANT. SECT.
7Y		VAR COND	R F SECT
8	G3-50640	COND. CAP. COUP	
9	W-45782-B	COND. .05 MF	400V PAPER
10	W-45781-B	COND .25 MF	150 V. PAPER
11	W-45783	COND. 16 MF	150 V. ELECT.
12	W-45783	COND 16 MF	15 OV ELECT.
13	W-45780-B	COND .02 MF.	160 V PAPER
14	G2-34002	COND. 100 MF	MICA.
15	W-45780-B	COND .02 MF	160V PAPER
16	W-45817-A	COND. .05 MF	160V PAPER
17	B-46114	CORD & PLUG,	POWER
18	W-44396	RES. 90 Ω	3½ W. FLEX
19	22990	RES. 25,000 Ω	½ W. CARB
20	37583	RES. 2½ MEG Ω	½ W. CARB
21	23785	RES. 500,000 Ω	½ W. CARB
22	23785	RES. 500,000 Ω	½ W. CARB
23	W-45965	RES. 110 Ω	½ W. FLEX.
24	G21-28807	SOCKET	6 PRONG
25	G21-28807	SOCKET	6 PRONG.
26	G178-36400	SOCKET	NO MARKING
27	G178-36400	SOCKET	NO MARKING
28	45805	SPEAKER	281 BL 5
29	G42-26719	TERM. BOARD,	PHONO
30Z	45786	VOL. CONTROL	400000Ω
30Y		SWITCH	S.P.S.T. PWR.

©John F. Rider, Publisher

Voltage, Changes

CROSLEY RADIO CORP.

MODEL 577
Early, Late
Schematic, Socket

TUBE SOCKET VOLTAGE READINGS

Tube	Function	H	P	S	Su	K	Go	Ga
6A8G	Oscillator-Modulator	6.3	105	60	—	3	-12	105
6U7G	I-F Amplifier	6.3	105	105	3	3	—	—
6Q7G	Det, AVC, A-F Amplifier	6.3	105	—	—	0	—	—
25A6G	Output	25.0	100	105	—	0	—	—
25Z6G	Rectifier	25.0	117.5	—	—	110	—	—

Power output approximately 1 watt.
Power consumption approximately 60 watts.
Voltage drop across speaker field 110 volts.
All voltages except filaments will be approximately 10% lower if measured on 117.5 volts DC power supply.

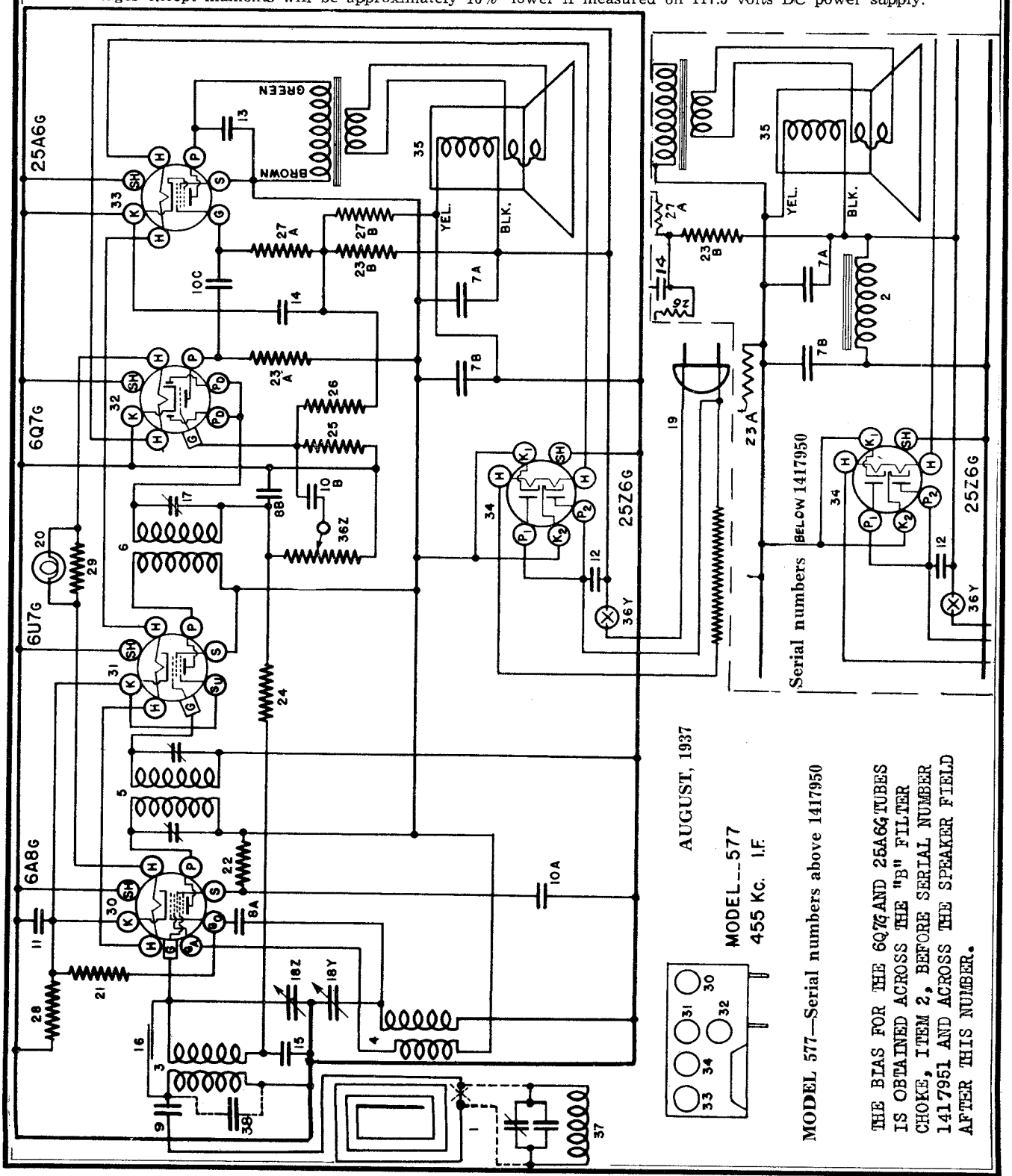

©John F. Rider, Publisher

MODEL 577
Early, Late
Socket, Trimmers
Layout, Alignment

CROSLEY RADIO CORP.

ALIGNMENT PROCEDURE

The chassis of this receiver is connected to one side of the power supply and for this reason all test equipment should be thoroughly insulated in order that the power supply will not become short circuited while aligning the receiver.

CONNECTING OUTPUT METER

Connect one terminal of the output meter to the plate and the other terminal to the screen of the 25A6G output tube. Be certain that the meter is protected from DC by connecting a condenser (.1 mfd. or larger—not electrolytic) in series with one of the leads.

Tuning the I-F Amplifier to 455 Kilocycles.

(a) Disconnect the antenna roll from the receiver and connect the output of the signal generator through a 50 mmf. condenser to the antenna connection on the receiver. Do not use a ground return from the signal generator unless it is found to be absolutely necessary. If it is found to be necessary, a small condenser (approximately .001 mfd.) should be connected in series with the ground terminal of the signal generator and the receiver chassis. KEEP THE GENERATOR LEADS AS FAR AS POSSIBLE FROM THE GRID LEADS OF THE OTHER SCREEN GRID TUBES.

(b) Set the station selector so that the plates of the condenser gang are completely out of mesh and turn the volume control to the right (ON).

(c) Set the signal generator to 455 kilocycles.

(d) Adjust the 2nd I-F trimmer condenser, Item 17, located at the rear of the chassis, for maximum reading on the output meter.

(e) Adjust the trimmer condensers located on the 1st I-F transformer for maximum output.

(f) Repeat operations (d) and (e) for more accurate adjustments.

ALWAYS USE THE LOWEST SIGNAL GENERATOR OUTPUT THAT WILL GIVE A REASONABLE READING ON THE OUTPUT METER.

Aligning the R-F Amplifier.

(a) Set the signal generator to 1725 kilocycles.

(b) With the condenser gang turned to the minimum capacity position, adjust the trimmer condenser on the "OSC" section of the gang so that the 1725 kilocycle signal is heard. It is not necessary that the receiver tune through this signal.

(c) Set the signal generator to 1400 kilocycles.

(d) Tune-in the 1400 kilocycle signal in the region of 140 on the dial for maximum output.

(e) Adjust the trimmer condenser located on the "ANT" section of the gang for maximum output.

Note: Do not readjust the "OSC" trimmer.

(f) Repeat operations (d) and (e) for more accurate adjustments.

WAVE TRAP

Some chassis of this model are equipped with a wave trap for the purpose of eliminating interference from code stations which operate on a frequency of approximately 455 kilocycles. This assembly is located on the underneath side of the chassis and consists of a coil, a fixed condenser and a trimmer condenser as illustrated by dotted lines in the Wiring diagram.

The wave trap should not be adjusted until all other adjustments have been made. To make the adjustment, feed a 455 kilocycle signal from the signal generator through a 50 mmf. condenser into the antenna terminal of the receiver. With the band selector switch turned to the Broadcast Band position, the gang condenser open and the volume control full on, adjust the trimmer condenser on the wave trap for MINIMUM output.

Should the interfering station be operating on a frequency of slightly more or less than 455 kilocycles, the exact frequency should be determined with the aid of the signal generator. Then, instead of feeding a 455 kilocycle signal into the receiver the exact frequency of the interfering signal should be used. If it is not possible to determine the exact frequency of the interfering signal the antenna may be attached to the receiver and the receiver tuned to the position where the interfering signal is most noticeable. Then adjust the wave trap for minimum interference.

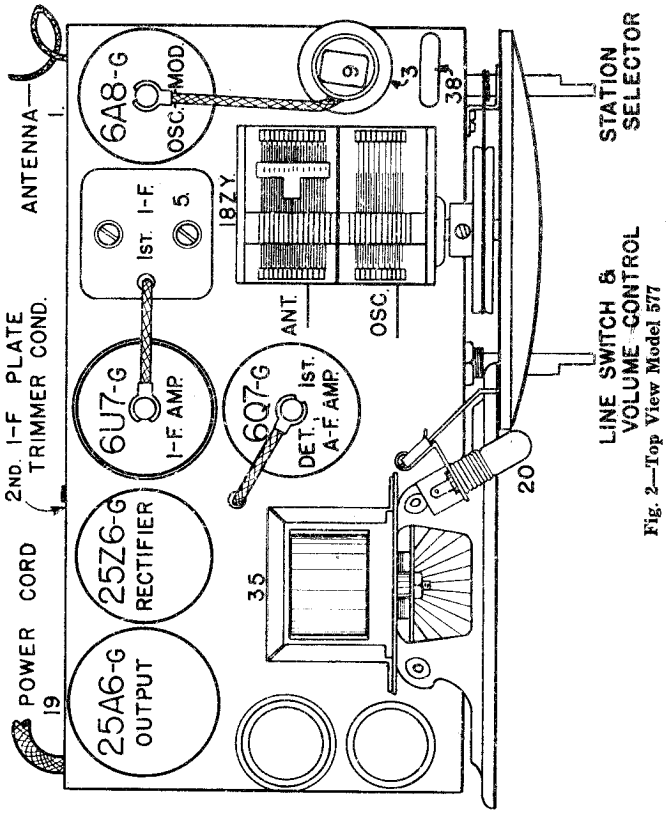

Fig. 2—Top View Model 577

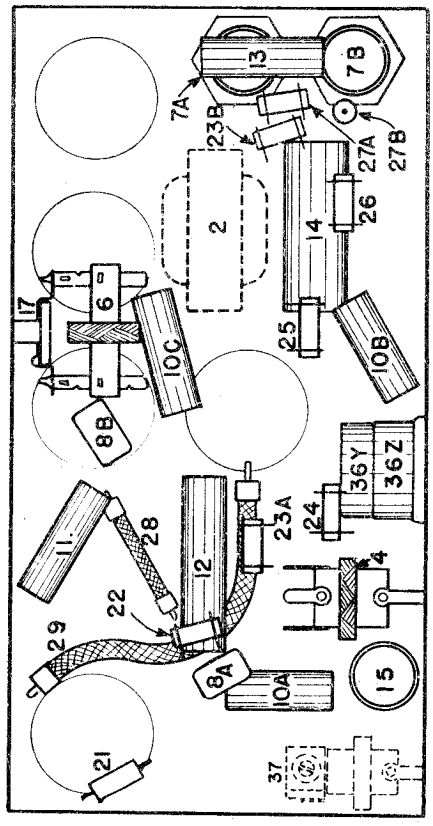

Fig. 3 Bottom View Model 577

©John F. Rider, Publisher

CROSLEY RADIO CORP.

MODEL 617
Schematic
Socket

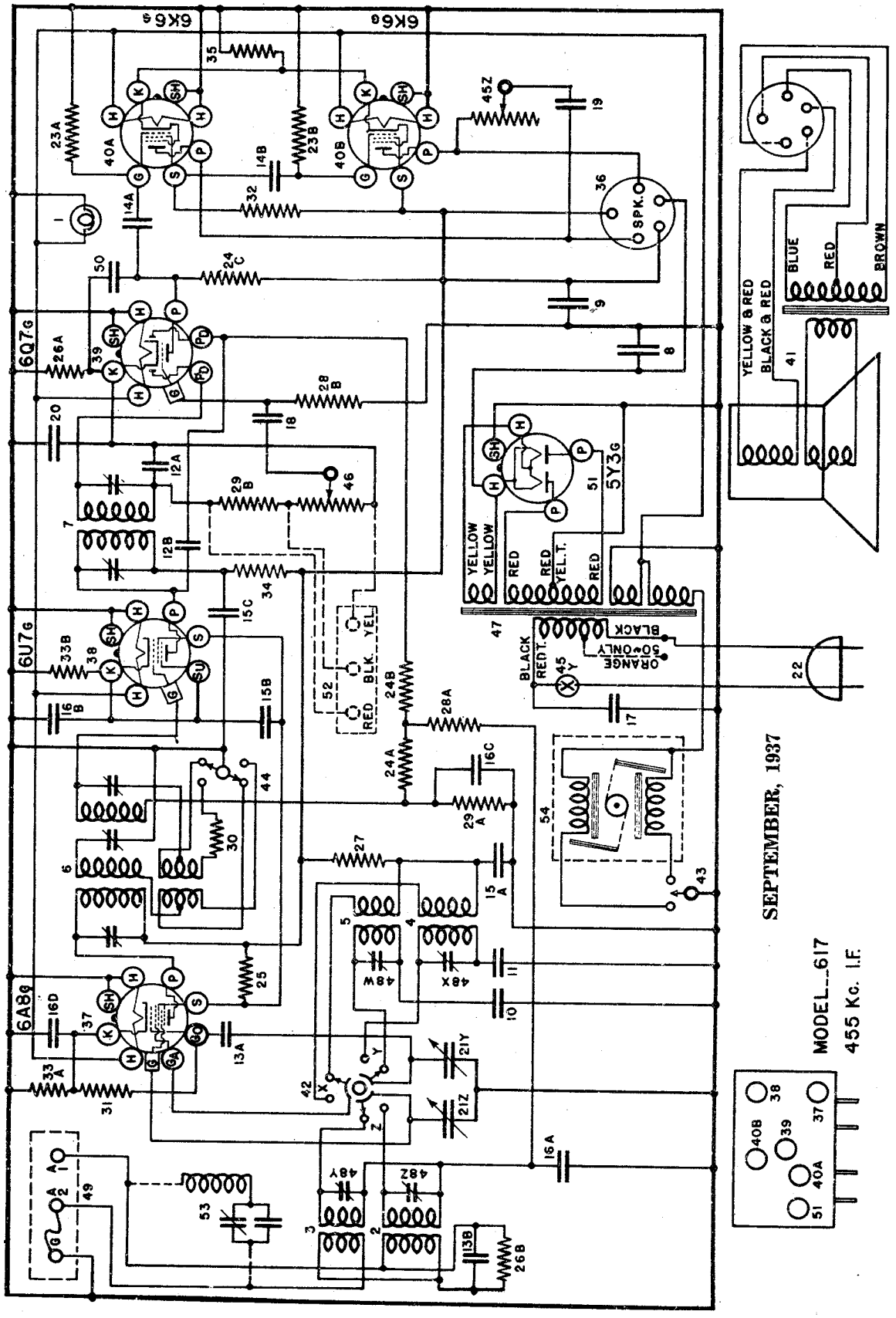

FIG. 1—WIRING DIAGRAM—MODEL 617

SEPTEMBER, 1937

MODEL 617
455 Kc. I.F.

©John F. Rider, Publisher

MODEL 617
Socket, Trimmers
Layout, Voltage

CROSLEY RADIO CORP.

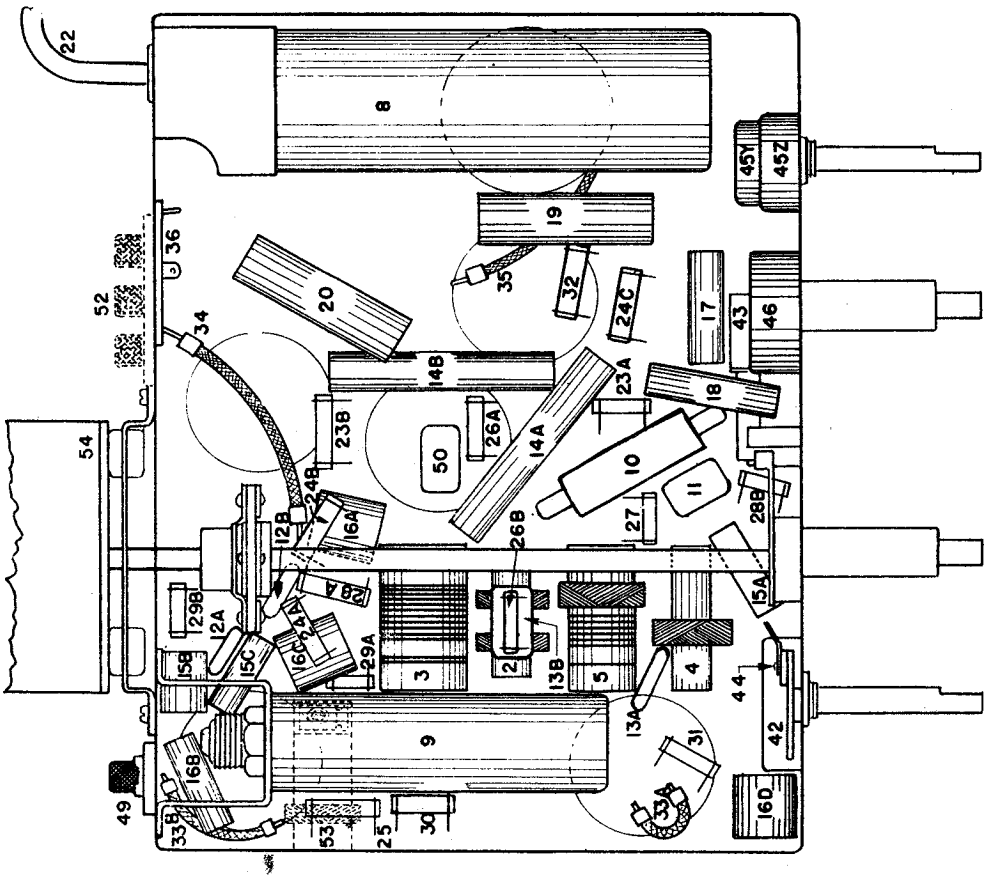

Fig. 3 Bottom View Model 617

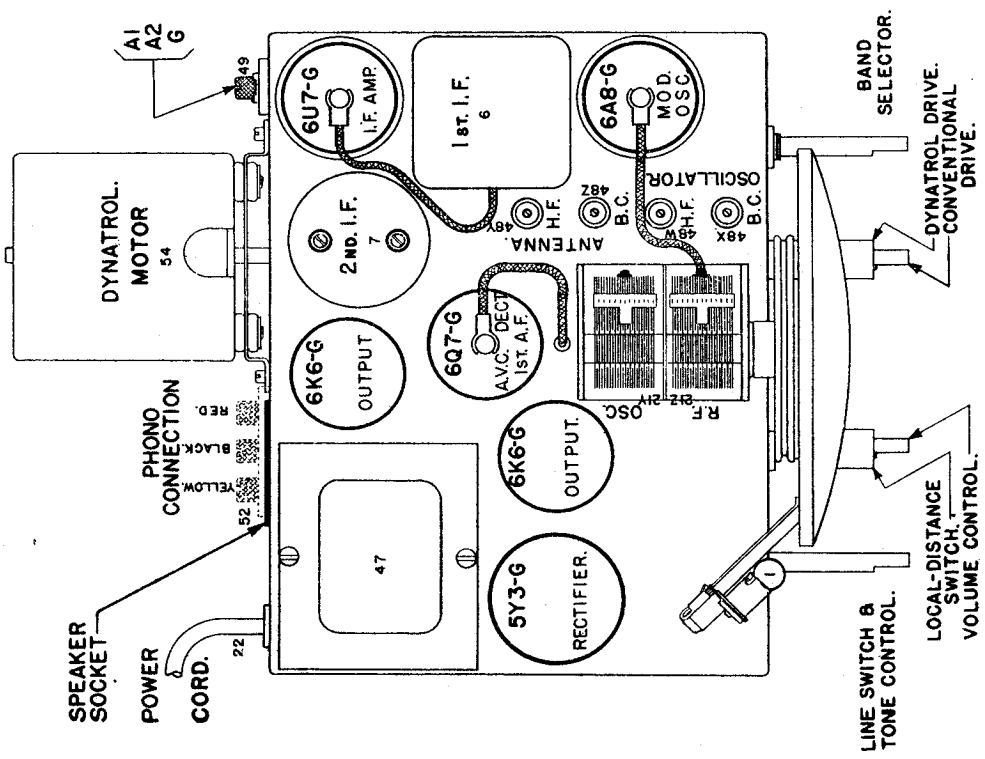

Fig. 2 Top View Model 617

TUBE SOCKET VOLTAGE READINGS

Tube	Function	H	P	S	K	Go	Ga
6A8G	Oscillator-Modulator	6.3	220	100	3.	-15	156
6U7G	I-F Amplifier	6.3	206	100	2.5	—	—
6Q7G	Det, AVC & AF Amp.	6.3	68	—	1.5	—	—
6K6G	(2) Output	6.3	216	214	18.	—	—
5Y3G	Rectifier	5.0	—	—	280	—	—

Power output approximately 4.5 watts.
Power consumption approximately 55 watts at 117.5 volts.
Voltage drop across speaker field 60 volts.

©John F. Rider, Publisher

©John F. Rider, Publisher

SPECIFICATIONS

This model Crosley radio is a 6-tube AC receiver designed for American and Foreign broadcast reception. Electric tuning is accomplished in this model by means of the Dynatrol motor which is a vibrating type. Other features include automatic volume control, Local-Distance switch and push pull pentode output. The tuning range is divided into two bands as follows:

535-1725 Kilocycles or 560- 173 Metres (American Broadcast Band)
5.8- 18.3 Megacycles or 52-16.3 Metres (High Frequency or Foreign Band)

CIRCUIT DESCRIPTION

Six octal base glass tubes are employed in a superheterodyne circuit which consists of a combination oscillator-modulator tube, 455 kilocycle I-F amplifier, push pull pentode output and power supply. The 6Q7G tube serves as the detector and 1st A-F amplifier and supplies AVC voltage to the grids of the 6A8G and 6U7G tubes. The speaker field is located in the negative leg of the power supply. Phase inversion is obtained in the output circuit by the voltage developed across a 3000 ohm resistor, item 32.

SOCKET VOLTAGES

The tube socket voltages are measured from the tube socket contacts to the chassis with a 1000 ohm per volt, 500-volt D. C. voltmeter (except filaments) with receiver in operating condition and no signal input. The filament voltages should be measured with an accurate low range A. C. voltmeter (approximately 0-10 volts). Readings may vary plus or minus 10% of values given.

SPECIAL POWER TRANSFORMER ADJUSTMENT

In localities where the voltage variation on 50 or 60 cycle power supply lines is greater than customary commercial limits, special 50-60 cycle power transformers are available. These transformers have a "high" and "low" voltage tap on the under side of the chassis. The "high" voltage lead (BLACK) and the "low" voltage lead (ORANGE) are connected to a terminal strip near the transformer.

The voltage range of the "low" tap of the 95-130 volt transformer is from 95 to 112½ volts and of the "high" tap is from 112½ to 130 volts. The range of the "low" tap of the 190-260 volt transformer is from 190 to 225 volts and of the "high" tap is from 225 to 260 volts.

The accompanying illustration shows the connections for changing from high to low or low to high line voltage. Note the "jumper" wire which is attached to the terminal at which one side of the power cord is attached. The other end of this jumper wire should be connected to the ORANGE or BLACK lead of the transformer primary, according to the line voltage the receiver is to be used on.

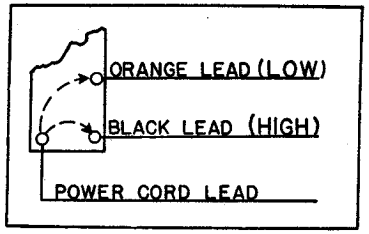

NOTE: Any change made in the power supply circuit of the receiver should be plainly stamped or otherwise permanently recorded on the rear of the chassis.

ALIGNMENT PROCEDURE

All the circuits in this receiver are very accurately adjusted at the factory and normally should need no further adjustment. However, if it is definitely known that an adjustment is necessary the circuits may be properly aligned with the use of a modulated signal generator and an output meter.

CONNECTING OUTPUT METER

Connect the output meter to the plates of the two 6K6G output tubes. Be certain that the meter is protected from D. C. by connecting a condenser (.1 mfd. or larger—not electrolytic) in series with one of the leads.

Tuning The I-F Amplifier To 455 Kilocycles.

(a) Connect the output of the signal generator through a .02 mfd. condenser to the top cap of the 6U7G tube, leaving the tube's grid lead in place. Connect the ground lead from the signal generator to the ground terminal of the receiver. KEEP THE GENERATOR LEADS AS FAR AS POSSIBLE FROM THE GRID LEADS OF THE OTHER SCREEN GRID TUBES.

(b) Set the station selector so that the tuning condenser plates are completely out of mesh. Turn the volume control knob to the right (ON) and turn the tone control knob to the left (TREBLE).

(c) Turn the band selector switch to the Broadcast Band.

(d) Turn the Local-Distance switch to the "Distance" position.

(e) Set the signal generator to 455 kilocycles.

(f) Adjust both trimmer condensers located on top of the 2nd I-F transformer for maximum output. DO NOT ADJUST THE TRIMMER CONDENSERS LOCATED ON THE 2ND I-F TRANSFORMER WITH THE SIGNAL GENERATOR LEAD CONNECTED TO THE 6A8G TUBE.

(g) Transfer the signal generator lead to the top cap of the 6A8G tube, leaving the tube's grid clip in place.

(h) Close the middle trimmer of the 1st I-F transformer. Do not force adjustment screw.

(i) Adjust the top and then the bottom trimmers of the 1st I-F transformer for maximum output.

(j) Adjust the middle trimmer of the 1st I-F transformer for maximum output.

ALWAYS USE THE LOWEST SIGNAL GENERATOR OUTPUT THAT WILL GIVE A REASONABLE READING ON THE OUTPUT METER.

Aligning The R-F Amplifier.

When aligning the R-F amplifier the output lead from the signal generator is connected to the antenna (A) terminal of the receiver. For the Broadcast Band a 200 mmf. condenser should be connected in series with the output lead of the signal generator and for the High Frequency Band a 250 ohm carbon resistor should be used in place of the condenser.

(a) With the station selector adjusted so that the tuning condenser plates are completely out of mesh and the band selector switch set for the band being aligned, adjust the "OSC" shunt trimmer so that the MINIMUM CAPACITY SIGNAL ¶ (C) is heard (it is not necessary that the receiver tune through this signal).

(b) Adjust the station selector so that the SHUNT ALIGNMENT signal is tuned-in with maximum output. Then adjust the "ANT" shunt trimmer for maximum output. Readjust the station selector slightly so that the generator signal is tuned-in with maximum output and check the adjustment of the "ANT" trimmer. DO NOT READJUST THE OSCILLATOR TRIMMER.

NOTE: When shunt aligning the High Frequency Band care should be exercised so that the circuits will be aligned on the correct frequency rather than on the image frequency which is approximately 910 kilocycles less than the fundamental. To check on this, increase the output of the signal generator 10 times, or more, and try to tune-in the signal both at the generator frequency as indicated on the station selector dial and at approximately 910 kilocycles less than the correct frequency. If the circuits have been properly aligned the signal can be tuned-in at both positions but much stronger at the correct frequency.

(C) SIGNAL INPUT FREQUENCIES

	Minimum Capacity Signal	Shunt Alignment Signal
American Broadcast Band	1,725 Kilocycles	1,400 Kilocycles
High Frequency Band	18,300 Kilocycles	18,000 Kilocycles

WAVE TRAP

Some chassis of this model are equipped with a wave trap for the purpose of eliminating interference from code stations which operate on a frequency of approximately 455 kilocycles. This assembly is located on the underneath side of the chassis and consists of a coil, a fixed condenser and a trimmer condenser as illustrated by dotted lines in the Wiring Diagram (item 53).

The wave trap should not be adjusted until all other adjustments have been made. To make the adjustment, feed a 455 kilocycle signal from the signal generator through a 200 mmf. condenser into the antenna terminal of the receiver. With the band selector switch turned to the Broadcast Band position, the gang condenser open and the volume control full on, adjust the trimmer condenser on the wave trap for MINIMUM output.

Should the interfering station be operating on a frequency of slightly more or less than 455 kilocycles, the exact frequency should be determined with the aid of the signal generator. Then, instead of feeding a 455 kilocycle signal into the receiver the exact frequency of the interfering signal should be used. If it is not possible to determine the exact frequency of the interfering signal the antenna may be attached to the receiver and the receiver tuned to the position where the interfering signal is most noticeable. Then adjust the wave trap for minimum interference.

DYNATROL MOTOR

Should either vibrator unit of the Dynatrol motor need readjustment, the following procedure should be followed:

(a) Loosen the adjusting nut until the drive shaft can be rotated freely between the thumb and forefinger. The gap between the armature and "E" laminations should be approximately 3/16".

(b) With the motor running, tighten the adjusting nut until chatter stops. Care should be taken, however, not to tighten this adjustment too tight as an unstable condition will be reached wherein a slight change may result in a locked motor.

(c) Check the time required for the dial pointer to travel from each end of the dial to the other. The adjusting screws should be set so that approximately eight seconds are required in each direction.

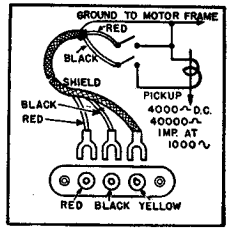

Fig. 4 Phonograph Pickup

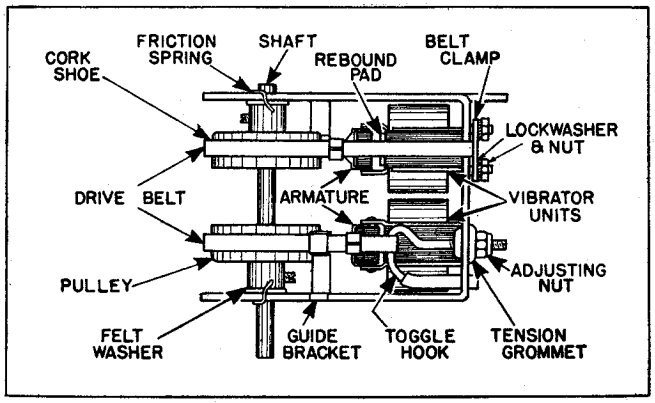

Fig. 5

MODEL 617
Parts

CROSLEY RADIO CORP.

PARTS LIST—MODEL 617

Figures in first column refer to parts in Diagrams.

Item	Part No.	Description
1	W —43567	Dial Light Bulb
	G6 —44363	D. L. Socket Assy.
2	G148 —32000	Ant. Coil B-C.
3	G142 —32000	Ant. Coil H-F.
4	G145 —32002	Osc. Coil B-C.
5	G144 —32002	Osc. Coil H-F.
6	G161 —32004	1st I-F Trans. 455 Kc.
7	G166 —32004	2nd I-F Trans. 455 Kc.
8	W —44438A	Condenser 40 Mf. 300 V.
9	W —44012	Condenser 16 Mf. 250 V.
10	G16 —34000	Condenser 3800 Mmf. H-F. Osc. Series
11	G14 —34002	Condenser 400 Mmf. B-C. Osc. Series
12A	G2 —34002	Condenser .0001 Mf. Molded
12B	G2 —34002	Condenser .0001 Mf. Molded
13A	G13 —34002	Condenser .000035 Mf. Molded
13B	G13 —34002	Condenser .000035 Mf. Molded
14A	W —23142	Condenser .02 Mf. 400 V.
14B	W —23142	Condenser .02 Mf. 400 V.
15A	W —28621	Condenser .02 Mf. 200 V.
15B	W —28621	Condenser .02 Mf. 200 V.
15C	W —28621	Condenser .02 Mf. 200 V.
16A	W —36541	Condenser .02 Mf. 160 V.
16B	W —36541	Condenser .02 Mf. 160 V.
16C	W —36541	Condenser .02 Mf. 160 V.
16D	W —36541	Condenser .02 Mf. 160 V.
17	W —30805	Condenser .01 Mf. 400 V.
18	W —30323	Condenser .01 Mf. 200 V.
19	W —23615	Condenser .05 Mf. 400 V.
20	W —34712	Condenser .25 Mf. 160 V.
21	G42 —33001	2 Section Var. Tuning Cond.
	—44790	Dial Face (Glass)
	W —44085B	Dial Mask
	W —44299	Dial Hand (Pointer)
	W —40486	Pointer Mtg. Screw
	C —44687A	Support—Dial Glass
	W —44084A	Ring—Glass Support
	—41582	Drive Cord
	W —43561	Tension Spring
	G1 —43564	Pulley & Hub Assy.
	MG19—44575	Shaft & Coupling Assy.
	W —44479A	Bracket—Drive Shaft
	W —44480A	Sleeve, Drive Shaft
22	B —44004	Line Cord & Plug
23A	—23785	Resistor 500,000 Ohm 1/3 W. Carb.
23B	—23785	Resistor 500,000 Ohm 1/3 W. Carb.
24A	—33344C	Resistor 400,000 Ohm 1/3 W. Carb.
24B	—33344C	Resistor 400,000 Ohm 1/3 W. Carb.
24C	—33344C	Resistor 400,000 Ohm 1/3 W. Carb.
25	—24990	Resistor 25,000 Ohm 1/3 W. Carb.
26A	—24814	Resistor 7,000 Ohm 1/3 W. Carb.
26B	—24814	Resistor 7,000 Ohm 1/3 W. Carb.
27	—21876	Resistor 10,000 Ohm 1/3 W. Carb.
28A	—26577	Resistor 3 Megohm 1/3 W. Carb.
28B	—26577	Resistor 3 Megohm 1/3 W. Carb.
29A	—33474	Resistor 120,000 Ohm 1/3 W. Carb.
29B	—33474	Resistor 120,000 Ohm 1/3 W. Carb.
30	—42401B	Resistor 99 Ohm ¼ W. Ins.
31	—21237A	Resistor 60,000 Ohm 1/3 W. Carb.
32	—44009	Resistor 3,000 Ohm ¼ W. Ins.
33A	W —25937	Resistor 275 Ohm ½ W. Flex.
33B	W —25937	Resistor 275 Ohm ½ W. Flex.
34	W —23013	Resistor 2,000 Ohm 1¼ W. Flex.
35	W —21965	Resistor 375 Ohm 1 W. Flex.
36	G103 —28807	Socket Speaker
37	G156 —36400	Socket Type 6A8
38	G171 —36400	Socket Type 6U7
39	G160 —36400	Socket Type 6Q7
40A	G172 —36400	Socket Type 6K6
40B	G172 —36400	Socket Type 6K6
	W —40911	Tube Shield
41	—465BP15"M"	Speaker M'f'g. Spec. 1-D-1197
	—45186	V. C. & Cone Assy.
	—45187	Field Coil (750 Ohm)
	—45188	Output Transformer
	—44681	Spk. Plug
42	—44955	Band Selector Switch
43	G2 —44476	Dynatrol Switch
	G5 —44470	Toggle Arm (Dynatrol Sw.)
44	—44796	Local-Distance Switch
	G4 —44470	Toggle Arm & Clamp Assem
45	—44024B	Tone Control & Line Switch
46	—44467	Volume Control (1 Meg.)
47	—44695	Power Trans. 110 V. 60 Cy.
	—44697	Power Trans. 110 V. 50 Cy.
	—44696	Power Trans. 110 V. 25 Cy.
	—44698	Power Trans. 220 V. 50 Cy.
	—44694	Power Trans. 220 V. 25 Cy.
48	W —41247A	4 Sect. Shunt Trimmer Assy.
49	G27 —26719	Ant.-Gnd. Terminal Assy.
50	G3 —34002	Condenser .0005 Mf. Molded
51	G173 —36400	Socket Type 5Y3
52	G39 —26719	Phono. Terminal Assy.
53	G170 —32004	Wave Trap Assy.
54	G3 —44416	Dynatrol Motor
	W —45218	Vibrator Drive Unit (Left or Right)
	W —44317A	Pulley (Dyn. Motor)
	W —43622	Felt Washer
	W —44382	Friction Spring (Shaft)
	W —44319	Toggle Hook (Belt)
	— 7593	Tubing ⅞" (For Hook)
	W —44701C	Grommet (Tension)
	W —24074	Adjusting Nut
	W —44384A	Rubber Pad (Rebound)
	W —44745	Clamp Plate (Belt)
	W —43552	Clamp Spk. Plug
	— 7N	Cabinet
	W —44685A	Call Letter Clip
	W —44866	Call Letter Magn. Lens
	—45264	Call Letter List
	W —44431	Knob Local-Distance
	—44387B	Knob Dynatrol Motor
	—44386	Knob Sta. Select.-Vol. Cont.
	W —44432	Knob Band Select.—T. C. & Line Switch
	B —44869A	Escutcheon
	C —44972A	Cabinet Back
	—44819	Grille Cloth

©John F. Rider, Publisher

CROSLEY RADIO CORP.

MODEL 637
Schematic, Socket Voltage

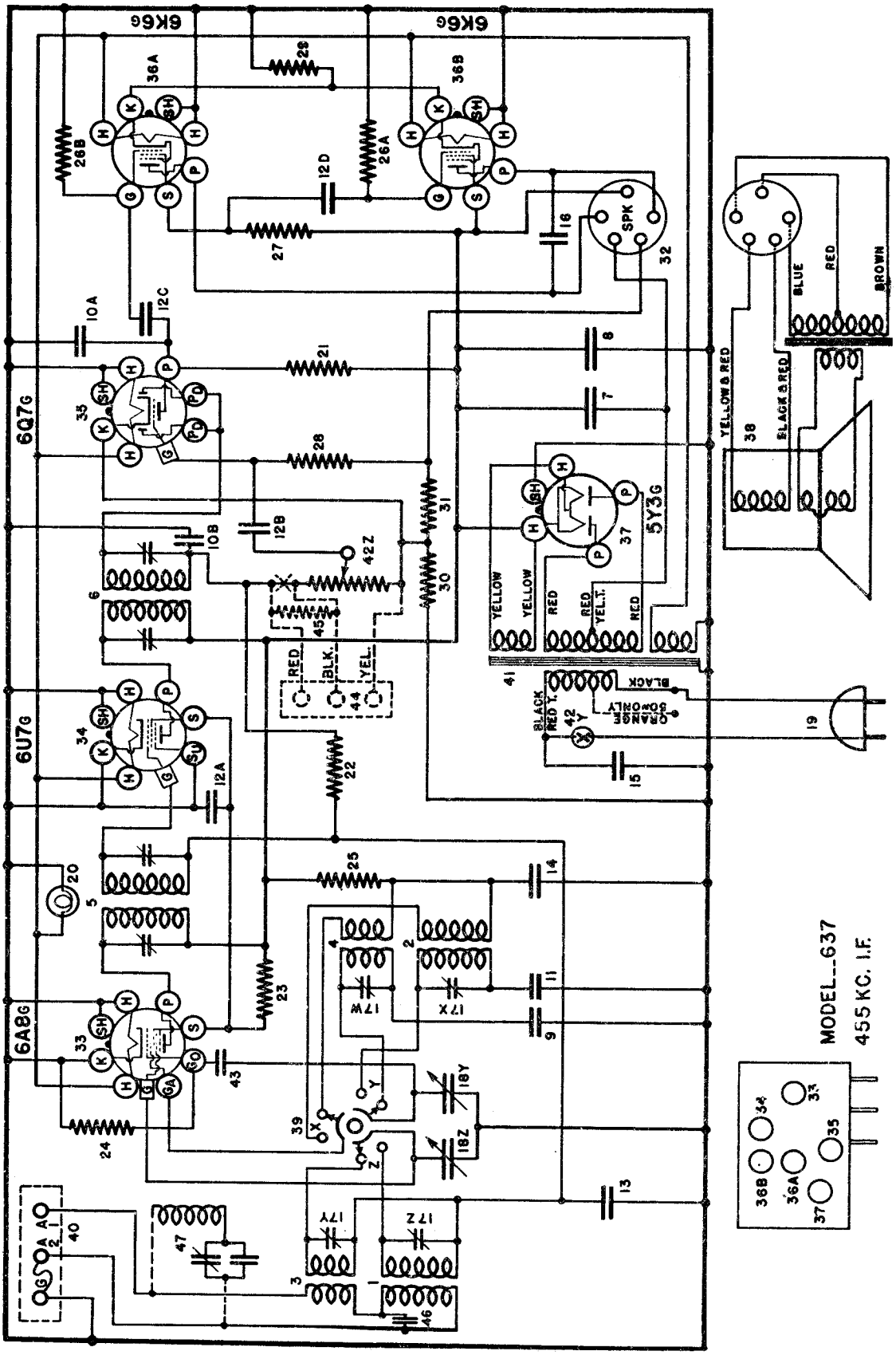

AUGUST, 1937

TUBE SOCKET VOLTAGE READINGS

Tube	Function	Ga	Go	P	K	S	H
6A8G	Oscillator-Modulator	190	-15	210	0	120	6.3
6U7G	I-F Amplifier	—	—	210	0	120	6.3
6Q7G	Det, AVC & A-F Amp.	—	—	90	-3	—	6.3
6K6G	(2) Output	—	—	205	20	210	6.3
5Y3G	Rectifier	—	—	—	215	—	5.0

Power output approximately 4.5 watts.
Power consumption approximately 60 watts at 11.5 volts.
Voltage drop across speaker field 60 volts.

©John F. Rider, Publisher

MODEL 637
Alignment, Phono. Data

CROSLEY RADIO CORP.

Aligning The R-F Amplifier.

When aligning the R-F amplifier the output lead from the signal generator is connected to the antenna (A) terminal of the receiver. For the Broadcast Band a 100 mmf. condenser should be connected in series with the output lead of the signal generator and for the High Frequency Band a 400 ohm carbon resistor should be used in place of the condenser.

(a) With the station selector adjusted so that the tuning condenser plates are completely out of mesh and the band selector switch set for the band being aligned, adjust the "OSC" shunt trimmer so that the MINIMUM CAPACITY SIGNAL ¶ (C) is heard (it is not necessary that the receiver tune through this signal).

(b) Adjust the station selector so that the SHUNT ALIGNMENT signal is tuned-in with maximum output. Then adjust the "ANT" shunt trimmer for maximum output. Readjust the station selector slightly so that the generator signal is tuned-in with maximum output and check the adjustment of the "ANT" trimmer. DO NOT READJUST THE OSCILLATOR TRIMMER.

NOTE: When shunt aligning the High Frequency Band care should be exercised so that the circuits will be aligned on the correct frequency rather than on the image frequency which is approximately 910 kilocycles less than the fundamental. To check on this, increase the output of the signal generator 10 times, or more, and try to tune-in the signal both at the generator frequency as indicated on the station selector dial and at approximately 910 kilocycles less than the correct frequency. If the circuits have been properly aligned the signal can be tuned-in at both positions but much stronger at the correct frequency.

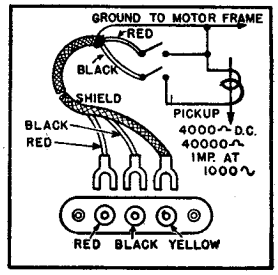

Fig. 4 Phonograph Pickup

(C) SIGNAL INPUT FREQUENCIES

	Minimum Capacity Signal	Shunt Alignment Signal
American Broadcast Band	1,725 Kilocycles	1,400 Kilocycles
High Frequency Band	18,300 Kilocycles	18,000 Kilocycles

WAVE TRAP

Some chassis of this model are equipped with a wave trap for the purpose of eliminating interference from code stations which operate on a frequency of approximately 455 kilocycles. This assembly is located on the underneath side of the chassis and consists of a coil, a fixed condenser and a trimmer condenser as illustrated by dotted lines in the Wiring Diagram (item 47).

The wave trap should not be adjusted until all other adjustments have been made. To make the adjustment, feed a 455 kilocycle signal from the signal generator through a 100 mmf. condenser into the antenna terminal of the receiver. With the band selector switch turned to the Broadcast Band position, the gang condenser open and the volume control full on, adjust the trimmer condenser on the wave trap for MINIMUM output.

Should the interfering station be operating on a frequency of slightly more or less than 455 kilocycles, the exact frequency should be determined with the aid of the signal generator. Then, instead of feeding a 455 kilocycle signal into the receiver the exact frequency of the interfering signal should be used. If it is not possible to determine the exact frequency of the interfering signal the antenna may be attached to the receiver and the receiver tuned to the position where the interfering signal is most noticeable. Then adjust the wave trap for minimum interference.

SPECIFICATIONS

This model Crosley radio is a 6-tube AC receiver designed for American and Foreign broadcast reception. The tuning range is divided into two bands as follows:

535-1725 Kilocycles or	560-173 Metres (American Broadcast Band)
5.8-18.3 Megacycles or	52-16.3 Metres (High Frequency or Foreign Band)

Circuit Description.

Six octal base glass tubes are employed in a superheterodyne circuit which consists of a combination oscillator-modulator tube, 455 kilocycle I-F amplifier, push pull pentode output and power supply. The 6Q7G tube serves as the detector and 1st A-F amplifier and supplies AVC voltage to the grids of the 6A8G and 6U7G tubes. The speaker field is located in the negative leg of the power supply. The bias voltage for the 6A8G and 6U7G tubes is obtained across a 40 ohm resistor, item 30, the bias for the 6Q7G tube is obtained across a 32 ohm resistor, item 31, and the bias for the output tubes is obtained across a 375 ohm resistor, item 29. Items 30 and 31 are located between the speaker field and ground. Phase inversion is obtained in the output circuit by the voltage developed across a 3000 ohm resistor, item 27.

SOCKET VOLTAGES

The tube socket voltages are measured from the tube socket contacts to the chassis with a 1000 ohm per volt, 500-volt D. C. voltmeter (except filaments) with receiver in operating condition and no signal input. The filament voltages should be measured with an accurate low range A. C. voltmeter (approximately 0-10 volts). Readings may vary plus or minus 10% of values given.

50 CYCLE POWER TRANSFORMER ADJUSTMENT

Receivers equipped with a 50 cycle power transformer have a "high" and "low" voltage tap on the under side of the chassis. The "high" voltage lead (BLACK) and the "low" voltage lead (ORANGE) are connected to a terminal strip near the transformer.

The voltage range of the "low" tap of the 95-130 volt transformer is from 95 to 112½ volts and of the "high" tap is from 112½ to 130 volts. The range of the "low" tap of the 190-260 volt transformer is from 190 to 225 volts and of the "high" tap is from 225 to 260 volts.

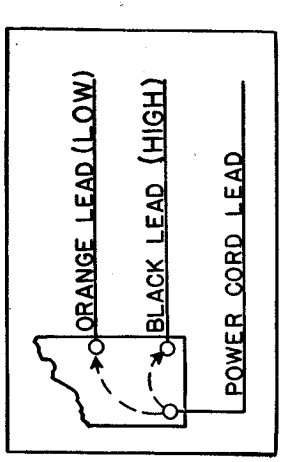

The accompanying illustration shows the connections for changing from high to low or low to high line voltage. Note the "jumper" wire which is attached to the terminal at which one side of the power cord is attached. The other end of this jumper wire should be connected to the ORANGE or BLACK lead of the transformer primary, according to the line voltage the receiver is to be used on.

NOTE: Any change made in the power supply circuit of the receiver should be plainly stamped or otherwise permanently recorded on the rear of the chassis.

ALIGNMENT PROCEDURE

All the circuits in this receiver are very accurately adjusted at the factory and normally should need no further adjustment. However, if it is definitely known that an adjustment is necessary the circuits may be properly aligned with the use of a modulated signal generator and an output meter.

CONNECTING OUTPUT METER

Connect the output meter to the plates of the two 6K6G Output tubes. Be certain that the meter is protected from D. C. by connecting a condenser (.1 mfd. or larger—not electrolytic) in series with one of the leads.

Tuning I-F Amplifier to 455 Kilocycles.

(a) Connect the output of the signal generator through a .02 mfd. condenser to the top cap of the 6A8G tube, leaving the tube's grid lead in place. Connect the ground lead from the signal generator to the ground terminal of the receiver. KEEP THE GENERATOR LEADS AS FAR AS POSSIBLE FROM THE GRID LEADS OF THE OTHER SCREEN GRID TUBES.

(b) Set the station selector so that the tuning condenser plates are completely out of mesh. Turn the volume control knob to the right (ON) and turn the tone control knob to the left (TREBLE).

(c) Turn the band selector switch to the Broadcast Band.

(d) Set the signal generator to 455 kilocycles.

(e) Adjust both trimmers located on top of the 2nd I-F transformer for maximum output. (Item 6, Fig. 2).

(f) Adjust both trimmers located on top of the 1st I-F transformer for maximum output. (Item 5, Fig. 2).

(g) Check operations (e) and (f) for more accurate adjustment.

ALWAYS USE THE LOWEST SIGNAL GENERATOR OUTPUT THAT WILL GIVE A REASONABLE READING ON THE OUTPUT METER.

©John F. Rider, Publisher

MODEL 637
Socket, Trimmers
Layout, Parts

CROSLEY RADIO CORP.

PARTS LIST—MODEL 637

Figures in first column refer to parts in Diagrams.

Item No.	Part No.	Description
1	G143—32000	Ant. Coil, B-C.
2	G145—32002	Osc. Coil, B-C.
3	G142—32000	Ant. Coil, H-F.
4	G144—32002	Osc. Coil, H-F.
5	G156—32004	1st I-F. Assy.
6	G157—32004	2nd I-F. Assy.
7	W —36057B	Condenser, 40 Mf. 300 V.
8	W —41081	Condenser, 16 Mf. 250 V.
9	G16 —34000	Condenser, 3,800 Mmf. (H-F. Osc. Series)
10A	G1 —34002	Condenser, .00025 Mf. Molded
10B	G1 —34002	Condenser, .00025 Mf. Molded
11	G14 —34002	Condenser, .0004 Mf. (B-C. Osc. Series)
12A	W —28621	Condenser, .02 Mf. 200 V.
12B	W —28621	Condenser, .02 Mf. 200 V.
12C	W —28621	Condenser, .02 Mf. 200 V.
12D	W —28621	Condenser, .02 Mf. 200 V.
13	W —36541	Condenser, .02 Mf. 160 V.
14	W —23615	Condenser, .05 Mf. 400 V.
15	W —30805	Condenser, .01 Mf. 400 V.
16	W —28619	Condenser, .006 Mf. 200 V.
17	W —41247A	4 Sect. Shunt Trimmer Assy.
18	G42 —33001	2 Sect. Gang. Cond.
	—44343D	Dial Face (Glass)
	W —44085B	Dial Mask
	C —44379A	Support Brkt. (Dial Glass)
	W —44084A	Support Ring (Dial Glass)
	W —43542B	Drive Shaft Bracket
	W —44134	Drive Shaft
	W —43549	Retaining Ring (Shaft)
	G1 —43564	Pulley and Hub Assy.
	W —44299	Pointer
	W —40486	Screw FS 20 (Pointer Mtg.)
	W —43561	Tension Spring
	—41582	Drive Cord (18¼")
19	B —44004	Pwr. Cord and Plug
20	W —43567	Dial Light, 6-8 V.
	G5 —44363	Light Socket Assy.
21	—21455	Resistor, 300,000 Ohm ¼W. Carbon
22	—26577	Resistor, 3 Megohm ¼W. Carbon
23	—37485	Resistor, 15,000 Ohm ½W. Carbon
24	—35928	Resistor, 60,000 Ohm ¼W. Ins.

Item No.	Part No.	Description
25	—30137	Resistor, 3,500 Ohm ½W. Carbon
26A	—33344	Resistor, 400,000 Ohm ½W. Carbon
26B	—33344	Resistor, 400,000 Ohm ½W. Carbon
27	—44009	Resistor, 3,000 Ohm ½W. Ins.
28	—34883	Resistor, 2 Megohm ½W. Carbon
29	W —43462	Resistor, 375 Ohm 2½W. Flex.
30	W —23012A	Resistor, 40 Ohm ¾W. Flex.
31	W —37631	Resistor, 32 Ohm ½W. Flex.
32	G103—28807	Socket—Speaker
33	G156—36400	Socket, Type 6A8
34	G171—36400	Socket, Type 6U7
35	G160—36400	Socket, Type 6Q7
36AB	G172—36400	Socket, Type 6K6
37	G173—36400	Socket, Type 5Y3
	W —40911	Tube Shield
	W —43552	Spk. Plug Clamp
38	365BP12"M"	Speaker—Spec. I-D-1089
	—44542	V. C. and Cone Assy. } Used
	—44273	Field Coil } on
	—44274	Output Trans. } 365BP12"M"
	—43672	Cardboard Ring } Spk.
39	W —43448A	Band Switch
40	G27 —26719	Ant. and Gnd. Terminal
41	—44356	Pwr. Trans., 60 Cy.—110 V.
	—44359	Pwr. Trans., 50 Cy.—110 V.
	—44360	Pwr. Trans., 50 Cy.—220 V.
	—44357	Pwr. Trans., 25 Cy.—110 V.
	—44358	Pwr. Trans., 25 Cy.—220 V.
42	—43449A	Vol. Cont. (½ Meg.) and Switch
43	G13 —34002	Cond., .000035 Mf. Molded
44	G37 —26719	Phono-Terminal Board
45	—21875	Res., 100,000 Ohm ½W. Used only on Sets with Phono-Terminals
46	G5 —34002	Cond., .00005 Mf. Molded
47	G165—32004	Wave Trap Assy. (460 Kc.)
	7E	Cabinet
	B —44226B	Escutcheon
	W —44381B	Knob (3 Req.)
	W —43553	Rubber Mtg. Foot

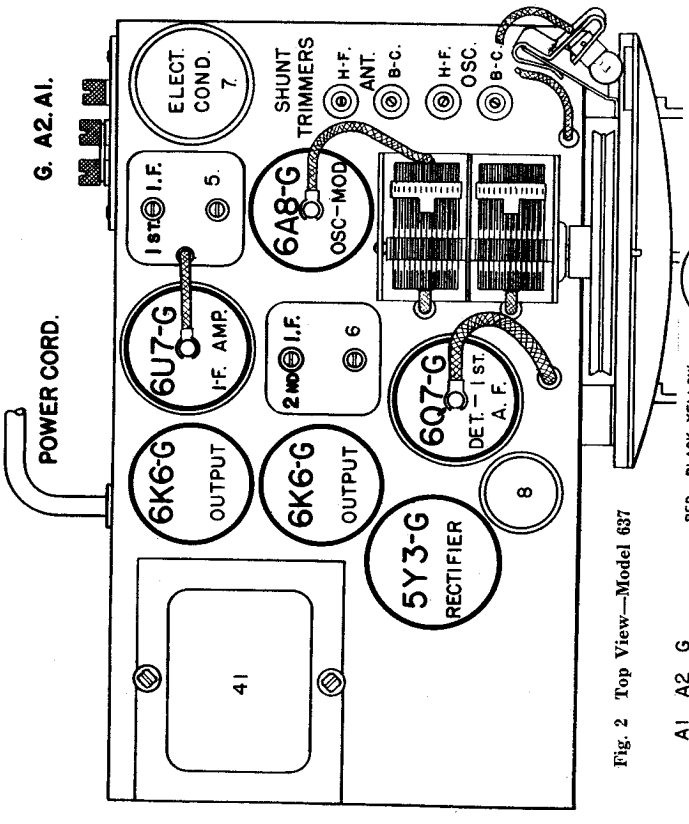

Fig. 2 Top View—Model 637

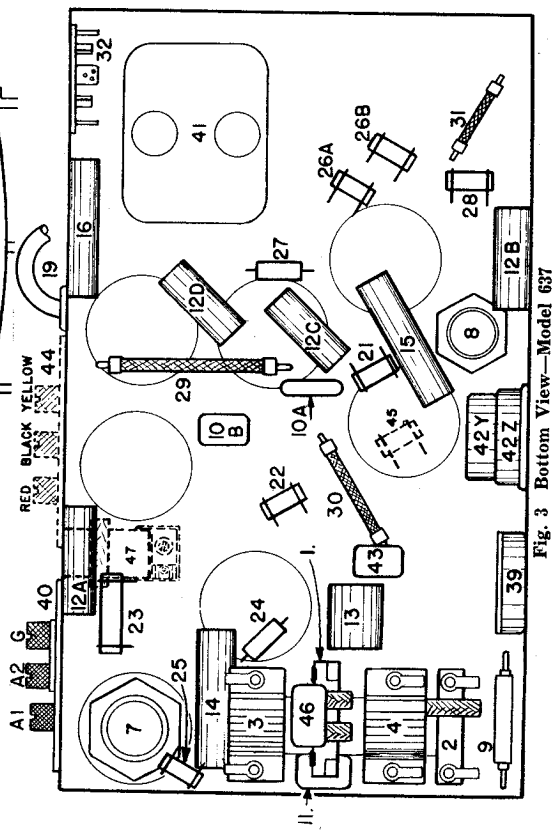

Fig. 3 Bottom View—Model 637

©John F. Rider, Publisher

MODELS 548,5548
Schematic,Socket
Parts

CROSLEY RADIO CORP.

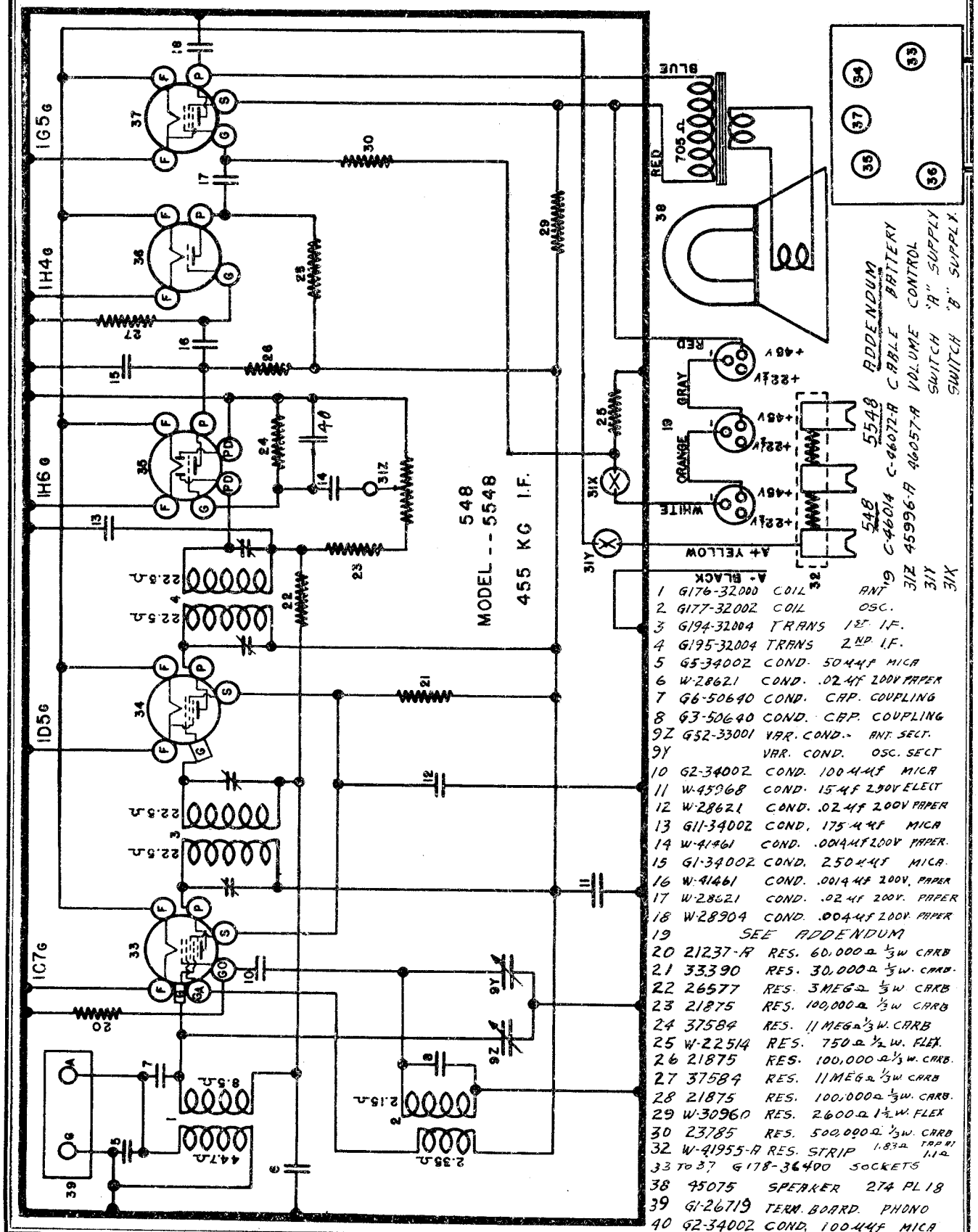

1	G176-32000	COIL	ANT
2	G177-32002	COIL	OSC.
3	G194-32004	TRANS	1ST I.F.
4	G195-32004	TRANS	2ND I.F.
5	G5-34002	COND.	50 μμf MICA
6	W-28621	COND.	.02 μf 200V PAPER
7	G6-50640	COND.	CAP. COUPLING
8	G3-50640	COND.	CAP. COUPLING
9Z	G52-33001	VAR. COND.	ANT. SECT.
9Y		VAR. COND.	OSC. SECT
10	G2-34002	COND.	100 μμf MICA
11	W-45968	COND.	15 μf 250V ELECT
12	W-28621	COND.	.02 μf 200V PAPER
13	G11-34002	COND.	175 μμf MICA
14	W-41461	COND.	.0014 μf 200V PAPER.
15	G1-34002	COND.	250 μμf MICA.
16	W-41461	COND.	.0014 μf 200V. PAPER
17	W-28621	COND.	.02 μf 200V. PAPER
18	W-28904	COND.	.004 μf 200V. PAPER
19	SEE ADDENDUM		
20	21237-A	RES.	60,000 Ω ⅓W CARB
21	33390	RES.	30,000 Ω ⅓W. CARB.
22	26577	RES.	3 MEG Ω ⅓W CARB
23	21875	RES.	100,000 Ω ⅓W CARB
24	37584	RES.	11 MEG Ω ⅓W. CARB
25	W-22514	RES.	750 Ω ½W. FLEX.
26	21875	RES.	100,000 Ω ⅓W. CARB.
27	37584	RES.	11 MEG Ω ⅓W CARB
28	21875	RES.	100,000 Ω ⅓W. CARB.
29	W-30960	RES.	2600 Ω 1½W. FLEX
30	23785	RES.	500,000 Ω ⅓W. CARB
32	W-41955-A	RES. STRIP	1.83 Ω TAP AT 1.1 Ω
33 TO 37	G178-36400	SOCKETS	
38	45075	SPEAKER	274 PL 18
39	G1-26719	TERM. BOARD.	PHONO
40	G2-34002	COND.	100 μμf MICA

©John F. Rider, Publisher

MODEL 647
Schematic
Socket

CROSLEY RADIO CORP.

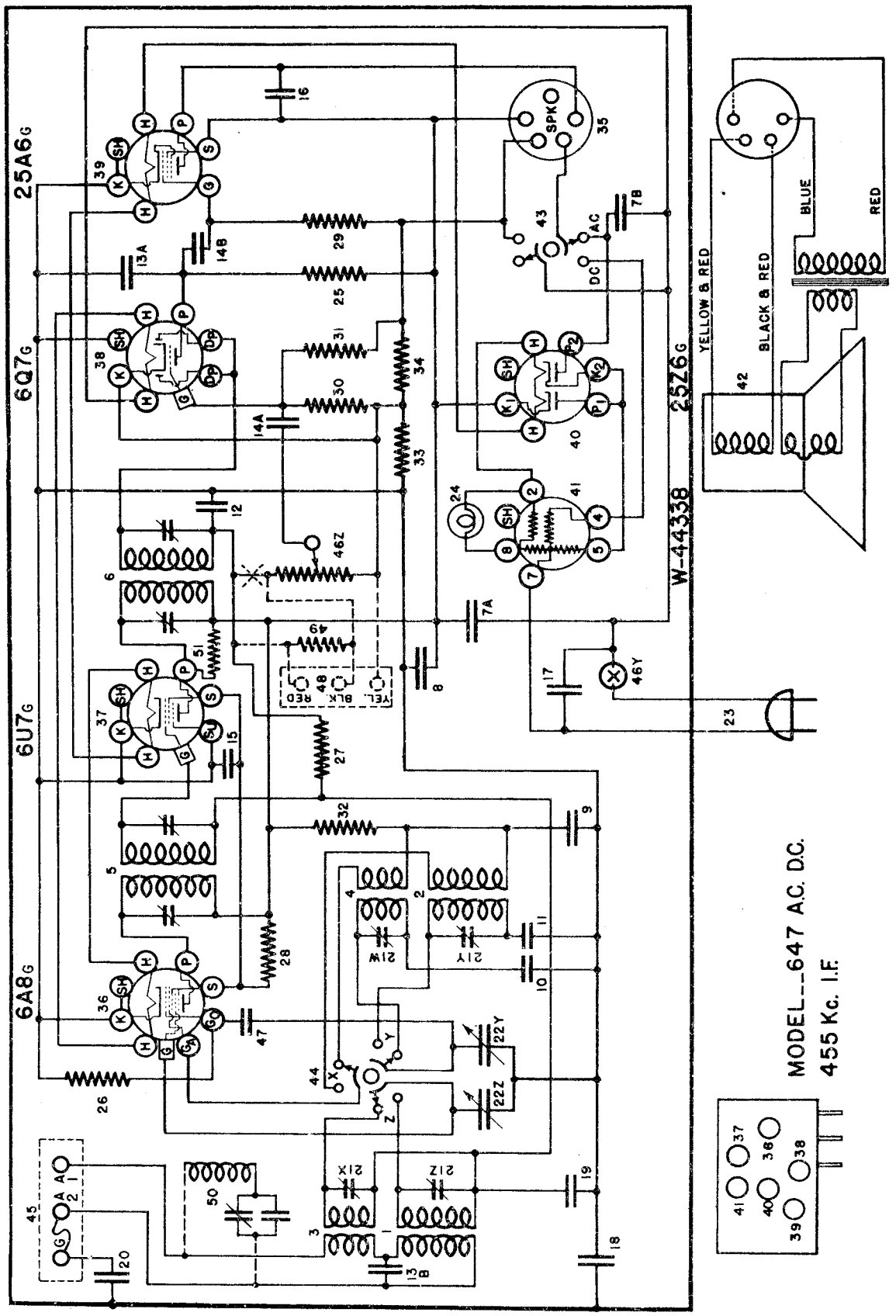

FIG. 1—WIRING DIAGRAM—MODEL 647

©John F. Rider, Publisher

MODEL 647
Voltage, Socket
Trimmers, Layout

CROSLEY RADIO CORP.

TUBE SOCKET VOLTAGE READINGS

Tube	Function	H	P	S	K	Go	Ga
6A8G	Oscillator-Modulator	6.3	145	85	0	-10	135
6U7G	I-F Amplifier	6.3	145	85	0	—	—
6Q7G	AVC, Detector & A. F. Amplifier	6.3	70	—	-2	—	—
25A6G	Output	25.0	130	145	0	—	—
25Z6G	Rectifier	25.0	110 (P1)	—	145 (K1)	—	—
W-44338	Ballast			Variable			

Power output approximately 2.5 watts.
Power consumption approximately 55 watts at 117.5 volts AC or 45 watts at 117.5 volts DC.
Voltage drop across speaker field 50 volts.
All voltage readings given above except filaments will be approximately 40% less if set is measured on 117.5 volt DC power supply.

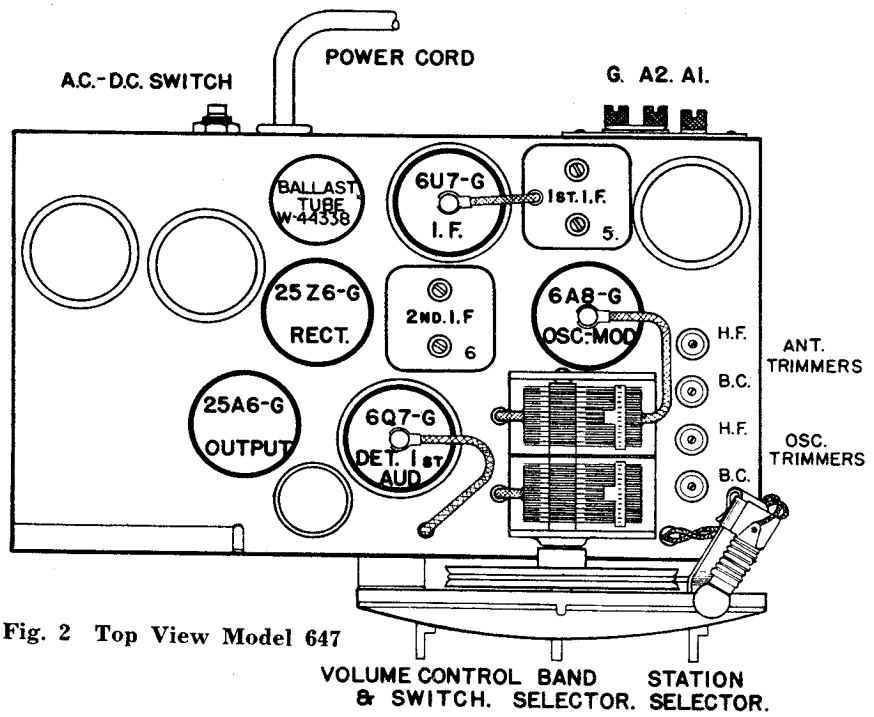

Fig. 2 Top View Model 647

SOCKET VOLTAGES

The following table gives the functions of the tubes used, together with the voltage readings between the tube socket contacts and the frame of the condenser gang. Voltage readings should be taken with a 1000 ohm per volt, 250 volt voltmeter (except filaments) with the volume control full "ON" and no signal input. The filament voltages should be measured with an accurate low range voltmeter. Voltage limits may vary plus or minus 10% of the values given.

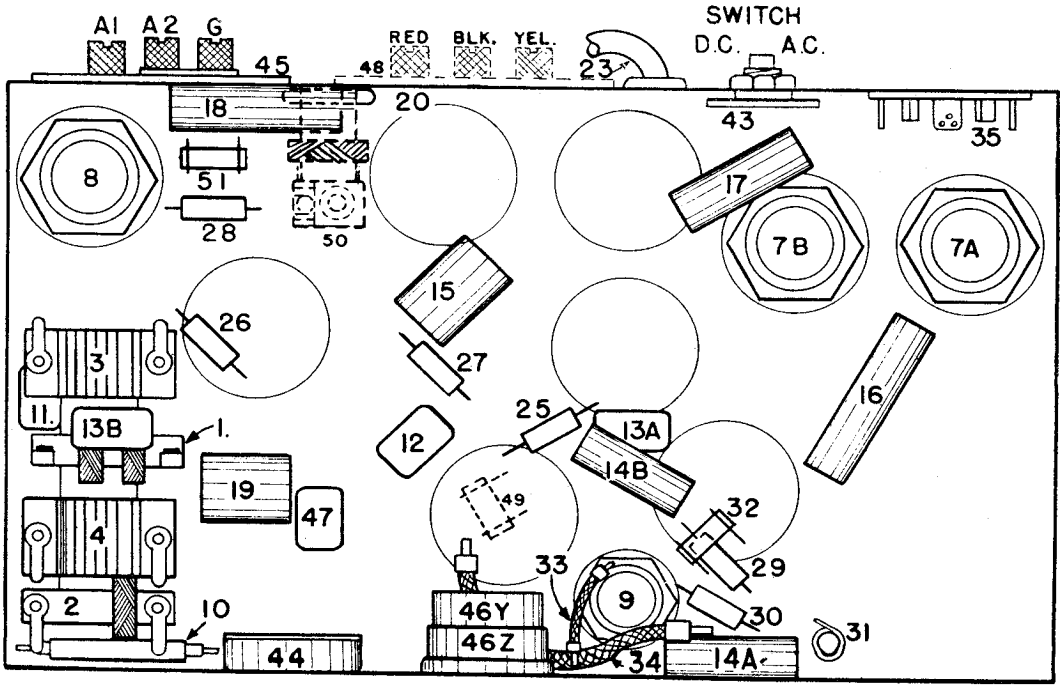

Fig. 3 Bottom View Model 647

SPECIFICATIONS

This model Crosley radio is an AC-DC receiver designed for 100 to 125 volt operation. The tuning range is divided into two bands as follows:

535-1725 Kilocycles or 550-173 Metres (American Broadcast Band)
5.8-18.3 Megacycles or 52-16.3 Metres (High Frequency or Foreign Band).

©John F. Rider, Publisher

CROSLEY RADIO CORP.

MODEL 647
Alignment
Parts

PARTS LIST — MODEL 647

Figures in first column refer to parts in Diagrams.

Item	Part No.	Description
1	G143-32000	Ant. Coil B. C.
2	G145-32002	Osc. Coil B. C.
3	G142-32000	Ant. Coil H. B.
4	G144-32002	Osc. Coil H. F.
5	G156-32004	1st I-F Assy.
6	G157-32004	2nd I-F Assy.
7A	W -40325	Condenser 50 Mf. 150 V.
7B	W -40325	Condenser 50 Mf. 150 V.
8	W -36057B	Condenser 40 Mf. 300 V.
9	W -41081	Condenser 16 Mf. 250V.
10	G16 -34000	Condenser 3800 Mmf.
11	G14 -34002	Condenser .0004 Mf.
12	G1 -34002	Condenser .00025 Mf.
13A	G2 -34002	Condenser .0001 Mf.
13B	G2 -34002	Condenser .0001 Mf.
14A	W -28621	Condenser .02 Mf. 200 V.
14B	W -28621	Condenser .02 Mf. 200 V.
15	W -35936	Condenser .05 Mf. 200 V.
16	W -30323	Condenser .01 Mf. 200 V.
17	W -23191A	Condenser .01 Mf. 400 V.
18	W -24049C	Condenser .1 Mf. 200 V.
19	W -36541	Condenser .02 Mf. 160 V.
20	G3 -34002	Condenser .0005 Mf.
21	W -41247A	4 Sect. Shunt Trim. Assy
22	G42 -33001	2 Sect. Var. Tuning Cond.
	-44679A	Dial Face (Glass)
	C -44293	Support Brkt. (Dial Glass)
	W -44084A	Support Ring (Dial)
	W -43542B	Bracket—Drive Shaft
	W -43549	Retaining Ring (Dr. Shaft)
	W -44134A	Drive Shaft
	G1 -43564	Pulley & Hub. Assy.
	W -44299	Pointer
	W -40486	Screw FS20 (Pointer Mtg.)
	W -43561	Tension Spring
	W -44085B	Dial Mask
	-41582	Drive Cord
	W -42666	Insulating Bushing (Shaft)
23	B -44004	Cord & Plug
24	W -44337	Dial Light 6-8 V.
	G6 -27134	Dial Light Socket
25	-34018	Resistor 200,000 Ohm 1/3 W. Carb.
26	-35928	Resistor 60,000 Ohm ¼ W. Ins.
27	-26577	Resistor 3 Megohm 1/3 W. Carb.
28	-22831	Resistor 15,000 Ohm 1/3 W. Carb.
29	-33344	Resistor 400,000 Ohm 1/3 W. Carb.
30	-37590	Resistor 750,000 Ohm 1/3 W. Carb.
31	-37584	Resistor 11 Megohm 1/3 W. Carb.
32	-31093	Resistor 2700 Ohm 1/3 W. Carb.
33	W -37267	Resistor 20 Ohm ½ W. Flex
34	W -43462	Resistor 375 Ohm 2½ W. Flex.
35	G103-28807	Socket Speaker
36	G156-36400	Socket Type 6A8
37	G171-36400	Socket Type 6U7
38	G160-36400	Socket Type 6Q7
39	G161-36400	Socket Type 25A6
40	G162-36400	Socket Type 25Z6
41	G180-36400	Socket W-44338 Ballast
	W -40911	Tube Shield
42	346BP12"M" -44543	Speaker Spec. No. 1-D-1088 V. C. & Lone Assy.
	-44544	Field Coil (Used on 346BP12"M" Spk.)
	-44545	Output Trans. (Used on 346BP12"M" Spk.)
	-43672	Cone Mtg. Ring
	W -43552	Spk. Plug Clamp
43	W -43468	A.C.-D.C. Switch
	W -42709	Lock Brkt (AC-DC Switch)
44	W -43448A	Band Switch
45	G27 -26719	Ant. & Gnd. Term. Assy.
45Z, 46Y	-43449A	Volume Cont. 500,000 Ohm & Line Switch
47	G13 -34002	Condenser .000035 Mf.
48	G37 -26719	Phono. Terminal Assy.
49	-21875	Resistor 100,000 Ohm 1/3 W.
	B -44226B	Escutcheon
	W -44381B	Knob—(3 Req.)
	W -43553	Rubber Mtg. Foot
	7EA	Cabinet
	B -44375B	Back—Cabinet
50	G165-32004	Wave Trap
51	-23785	Resistor 500,000 Ohm 1/3 W. Carb.

CIRCUIT DESCRIPTION

Six octal base glass tubes are employed in a superheterodyne circuit which consists of a combination oscillator-modulator tube, 455 kilocycle I-F amplifier, detector, pentode output and power supply. The 6Q7G tube serves as a detector and 1st audio amplifier and supplies AVC voltage to the grids of the 6A8G and 6U7G tubes. A ballast tube, part No. W-44338, is used in the power supply circuit. The bias voltage for the 6A8G and 6U7G tubes is developed across a 20 ohm resistor, item 33, and the bias voltage for the 6Q7G and 25A6G tubes is developed across a 375 ohm resistor, item 34. The two resistors, items 30 and 31, serve as a voltage divider for the 6Q7G tube. The speaker field is connected across the "B" power supply. A .01 mfd. condenser, item 17, is connected across the power supply leads to reduce electrical interference from that source.

AC-DC SWITCH

A switch is located on the rear of the chassis for the purpose of adapting the receiver to either an AC or DC power supply. To change the position on the switch, remove the screw in the locking bracket and move the end of the bracket to the other position as marked on the chassis. Lock the switch in position by replacing the screw. DO NOT OPERATE THE RECEIVER ON A DC POWER SUPPLY WITH THE SWITCH IN THE "AC" POSITION NOR ON AN AC POWER SUPPLY WITH THE SWITCH IN THE "DC" POSITION AS IT WILL CAUSE DAMAGE TO THE RECEIVER PARTS.

ALIGNMENT PROCEDURE

All the circuits in this receiver are very accurately adjusted at the factory and normally should need no further adjustment. However, if it is definitely known that an adjustment is necessary the circuits can best be properly aligned with the use of a modulated signal generator and an output meter.

CONNECTING OUTPUT METER

Connect one terminal of the output meter to the plate and the other terminal to the screen of the 25A6G output tube. Be certain that the meter is protected from DC by connecting a condenser (.1 mfd. or larger—not electrolytic) in series with one of the leads.

Tuning I-F Amplifier to 455 Kilocycles.

(a) Connect the output of the signal generator through a .02 mfd. condenser to the antenna terminal "A1" on the rear of the chassis. Connect the ground lead from the signal generator to the GROUND TERMINAL "G" on the receiver chassis. DO NOT CONNECT THE GROUND LEAD FROM THE SIGNAL GENERATOR DIRECTLY TO THE RECEIVER CHASSIS. KEEP THE GENERATOR LEADS AS FAR AS POSSIBLE FROM THE GRID LEADS OF THE OTHER SCREEN GRID TUBES.

(b) Set the station selector so that the plates of the condenser gang are completely out of mesh, turn the band selector switch to the left (American Broadcast Band) and turn the volume control to the right "ON."

(c) Set the signal generator to 455 kilocycles.

(d) Adjust both trimmer condensers located on top of the 2nd I-F transformer (Fig. 2) for maximum reading on the output meter.

(e) Adjust both trimmer condensers located on top of the 1st I-F transformer for maximum output.

(f) Check operations (d) and (e) for more accurate adjustments.

ALWAYS USE THE LOWEST SIGNAL GENERATOR OUTPUT THAT WILL GIVE A REASONABLE READING ON THE OUTPUT METER.

Aligning R-F Amplifier.

When aligning the R-F amplifier the output lead from the signal generator is connected to the antenna (A) terminal of the receiver. For the Broadcast Band a 100 mmf. condenser should be connected in series with the output lead of the signal generator and for the High Frequency Band a 400 ohm carbon resistor should be used in place of the condenser.

(a) With the station selector adjusted so that the tuning condenser plates are completely out of mesh and the band selector switch is set for the band being aligned, adjust the "OSC" shunt trimmer so that the MINIMUM CAPACITY SIGNAL ¶ (C), is heard. It is not necessary that the receiver tune through this signal.

(b) Adjust the station selector so that the SHUNT ALIGNMENT signal is tuned-in with maximum output. Then adjust the "ANT" shunt trimmer for maximum output. Readjust the station selector slightly so that the generator signal is tuned-in with maximum output and check the adjustment of the "ANT" trimmer. DO NOT READJUST THE "OSC" TRIMMER.

NOTE 1: When shunt aligning the High Frequency Band care should be exercised so that the circuits will be aligned on the correct frequency rather than on the image frequency which is approximately 910 kilocycles less than the fundamental. To check on this, increase the output of the signal generator 10 times, or more, and try to tune-in the signal both at the generator frequency as indicated on the station selector dial and at approximately 910 kilocycles less than the correct frequency. If the circuits have been properly aligned the signal can be tuned-in at both positions but much stronger at the correct frequency.

NOTE 2: If at any time the H-F coils are replaced, it may be necessary to vary the inductance of the "OSC" coil by moving the cross-over turn of wire at the gap to make the set track at the 6 megacycle end. Moving the turn toward the short end of the coil will decrease the inductance and moving it toward the long end will increase the inductance. If the signal is weak at 6 megacycles, a similar slight change in the inductance of the "ANT" coil should bring up the signal strength. THIS IS A CRITICAL OPERATION AND SHOULD NOT BE DONE ON ANY SET UNLESS CHANGING COILS MAKES IT NECESSARY.

(C) SIGNAL INPUT FREQUENCIES

	Minimum Capacity	Shunt Alignment
American Broadcast Band	1,725 Kilocycles	1,400 Kilocycles
High Frequency Band	18,300 Kilocycles	18,000 Kilocycles

WAVE TRAP

Some chassis of this model are equipped with a wave trap for the purpose of eliminating interference from code stations which operate on a frequency of approximately 455 kilocycles. This assembly is located on the underneath side of the chassis and consists of a coil, a fixed condenser and a trimmer condenser as illustrated by dotted lines in the Wiring diagram.

The wave trap should not be adjusted until all other adjustments have been made. To make the adjustment, feed a 455 kilocycle signal from the signal generator through a 100 mmf. condenser into the antenna terminal of the receiver. With the band selector switch turned to the Broadcast Band position, the gang condenser open and the volume control full on, adjust the trimmer condenser on the wave trap for MINIMUM output.

Should the interfering station be operating on a frequency of slightly more or less than 455 kilocycles, the exact frequency should be determined with the aid of the signal generator. Then, instead of feeding a 455 kilocycle signal into the receiver the exact frequency of the interfering signal should be used. If it is not possible to determine the exact frequency of the interfering signal the antenna may be attached to the receiver and the receiver tuned to the position where the interfering signal is most noticeable. Then adjust the wave trap for minimum interference.

AUG. 1937

Chassis Model 647

©John F. Rider, Publisher

MODELS 628,638
Schematic,Socket
Parts

CROSLEY RADIO CORP

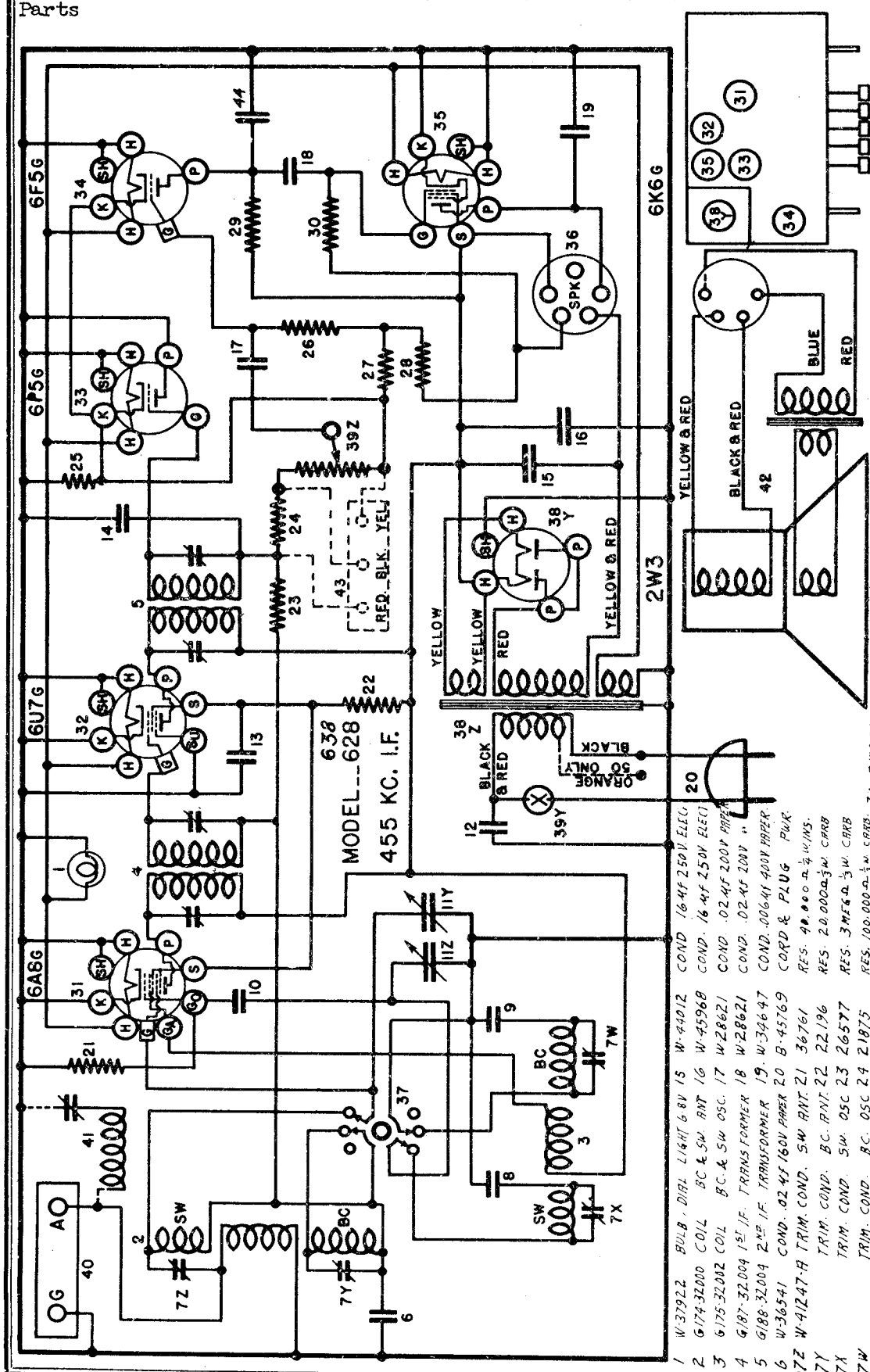

1 W-37922 BULB, DIAL LIGHT 6.8V
2 G174-32000 COIL BC & SW. ANT
3 G175-32002 COIL BC & SW OSC.
4 G187-32004 1ST I.F. TRANSFORMER
5 G188-32004 2ND I.F. TRANSFORMER
6 W-36541 COND. .02 μf 160V PAPER
7Z W-41247-A TRIM. COND. SW. ANT.
7Y TRIM. COND. BC. ANT.
7X TRIM. COND. SW. OSC
7W TRIM. COND. BC. OSC
8 G13-34005 COND. 1400 μμf MICA
9 G18-34002 COND. 400 μμf MICA
10 G5-34002 COND. 50 μμf MICA
11Z G55-33001 VAR. COND. OSC. SECT
11Y VAR. COND. ANT. SECT
12 W-30805 COND. .01 μf 400V PAPER
13 W-28621 COND. .02 μf 200V PAPER
14 G1-34002 COND. 250 μμf MICA
15 W-44012 COND 16 μf 250V ELECT
16 W-45968 COND. 16 μf 250V ELECT
17 W-28621 COND .02 μf 200V PAPER
18 W-28621 COND .02 μf 200V "
19 W-34647 COND. .006 μf 400V PAPER
20 B-45769 CORD & PLUG PWR.
21 36761 RES. 40,000 Ω ¼ W. INS.
22 22196 RES. 20,000 Ω ⅓ W. CARB
23 26577 RES. 3 MEG Ω ⅓ W. CARB
24 21875 RES. 100,000 Ω ⅓ W. CARB.
25 W-24537 RES. 60 Ω ½ W FLEX.
26 26577 RES. 3 MEG. Ω ⅓ W CARB.
27 W-23012-A RES. 40 Ω ¾ W FLEX.
28 W-25937 RES. 275 Ω ½ W FLEX.
29 21455 RES. 300,000 Ω ⅓ W. CARB.
30 23785 RES. 500,000 Ω ⅓ W CARB
31 G178-36400 SOCKET NO MARKING
32 G178-36400 SOCKET NO MARKING
33 G178-36400 SOCKET NO MARKING
34 G178-36400 SOCKET NO MARKING
35 G178-36400 SOCKET NO MARKING
36 G103-28807 SOCKET SPKR.
37 45901 BAND CHG. SWITCH
38Z 45903 PWR. TRANS. 60 ~ 110V *
38Y SOCKET NO MARKING
40 G1-26719 TERM BOARD A-G
41 G193-32004 WAVE TRAP
42 45863 SPEAKER 279BP12
43 G41-26719 TERMINAL BOARD, PHONO
44 G7-34002 COND. 400 μμf MICA
38Z 45939-B PWR. TRANS 50 ~ 110V *
38Y SOCKET NO MARKING
38Z 45940-B PWR. TRANS 50 ~ 220V *
38Y SOCKET NO MARKING

628 ADDENDUM
39Z 45864 Vol. Contr. 1 MEG.
39Y SW. S.P.S.T. PWR.

638 ADDENDUM
39Z 46314 Vol. Cont. 1 MEG.
39Y SW. S.P.S.T. PWR.

©John F. Rider, Publisher

CROSLEY RADIO CORP.

MODEL 817
Schematic
Socket

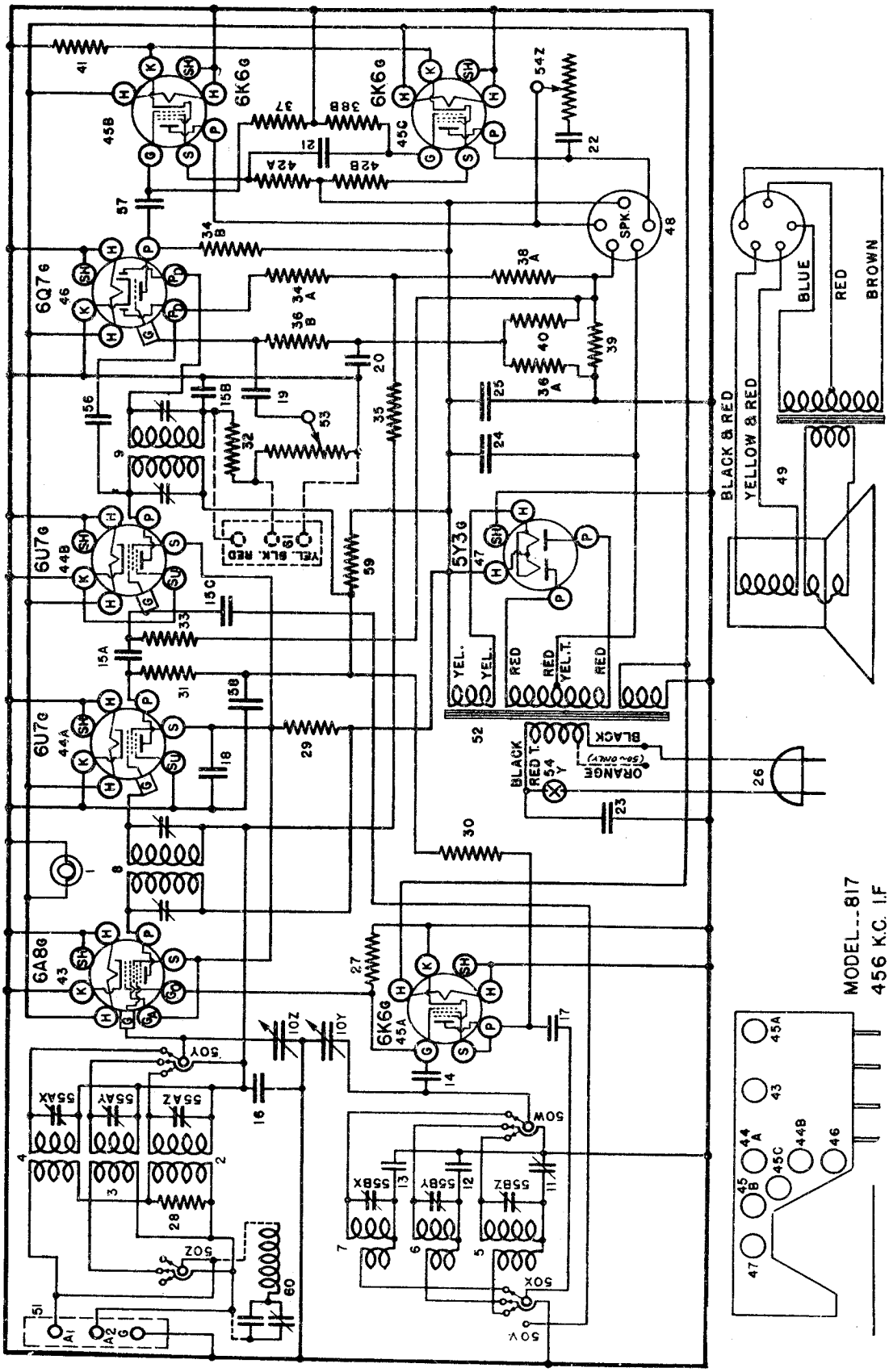

FIG. 1—WIRING DIAGRAM—MODEL 817

MODEL--817
456 K.C. I.F

JULY, 1937

©John F. Rider, Publisher

MODEL 817
Voltage,Socket
Trimmers,Layout

CROSLEY RADIO CORP.

TUBE SOCKET VOLTAGE READINGS

Tube	Function	H	P	S	G	K	Go	Ga
6A8G	Modulator	6.3	240	85	Neg	0	Neg	85
6K6G	Oscillator	6.3	145	145	Neg	0	—	—
6U7G	1st I-F Amp	6.3	240	85	Neg	0	—	—
6U7G	2nd I-F Amp	6.3	210	85	Neg	0	—	—
6Q7G	Det., AVC & 1st A-F Amp	6.3	120	—	Neg	0	—	—
6K6G	Output	6.3	235	230	0	18.5	—	—
6K6G	Output	6.3	235	230	0	18.5	—	—
5Y3G	Rectifier	5.0	—	—	—	240	—	—

Power output approximately 5.5 watts.

Power consumption approximately 70 watts at 117.5 volts
Voltage drop across speaker field 80 volts

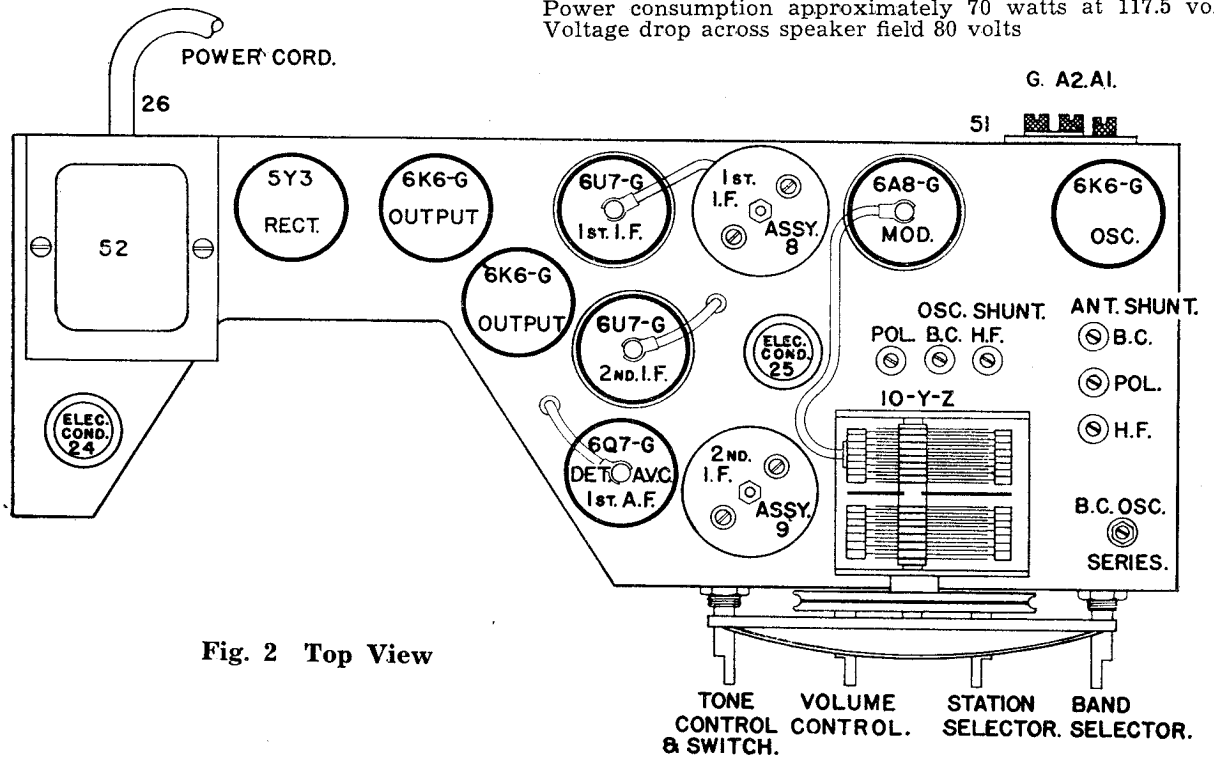

Fig. 2 Top View

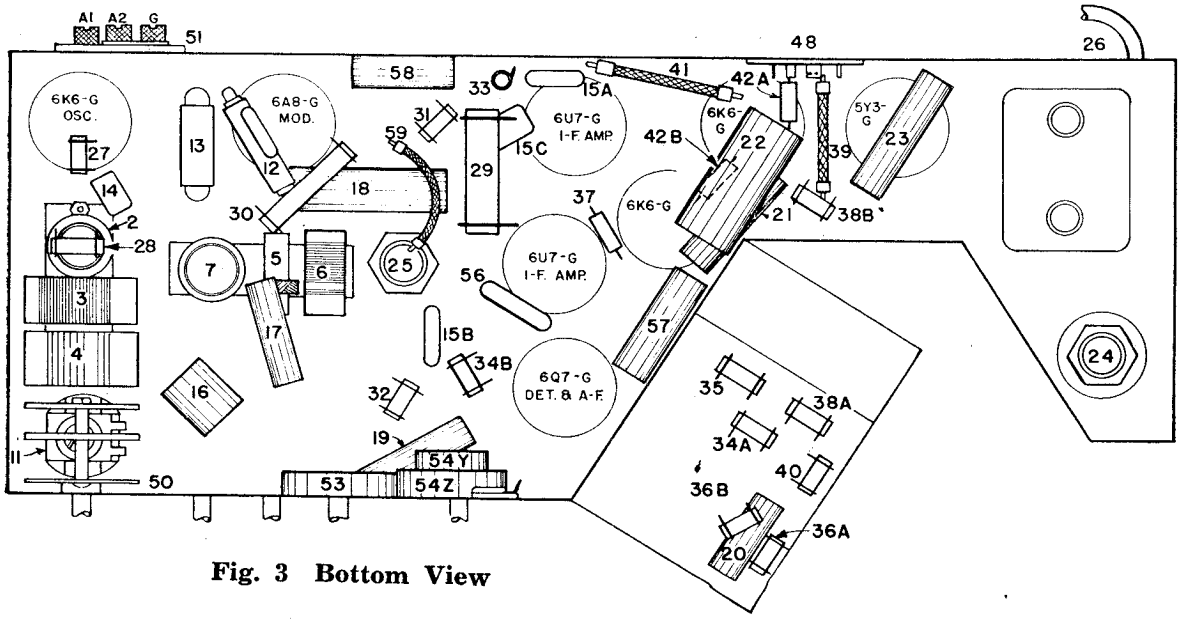

Fig. 3 Bottom View

©John F. Rider, Publisher

CROSLEY RADIO CORP.

MODEL 817
Alignment, Phono.
Data, Parts

This model Crosley radio is an 8-tube AC receiver designed for American and Foreign broadcast reception.

540-1850 Kilocycles or 555-162 Metres (American Broadcast Band)
1.9- 6.6 Megacycles or 158-45.5 Metres (Police & Amateur Band)
6.4- 22 Megacycles or 47-13.5 Metres (High Frequency or Foreign Band)

Circuit Description.

Eight octal base glass tubes are employed in a superheterodyne circuit which consists of separate oscillator and modulator tubes, two stages of I-F amplification—the second of which is resistance coupled, a combination AVC and diode detector and 1st A-F amplifier tube, push pull output and power supply. The speaker field is located in the negative leg of the power supply. The bias for all tubes except the output is developed across a 40 ohm resistor, item 39, located between the speaker field and ground. Phase inversion is obtained in the output circuit by the voltage developed across a 3000 ohm resistor, item 42A, located in the screen circuit of one of the output tubes, item 45B.

SOCKET VOLTAGES

The tube socket voltages are measured from the tube socket contacts to the chassis with a 1000 ohm per volt, 500-volt D. C. voltmeter (except filaments) with receiver in operating condition and no signal input. The filament voltages should be measured with an accurate low range A. C. voltmeter (approximately 0-10 volts). Readings may vary plus or minus 10% of values given.

50 CYCLE POWER TRANSFORMER ADJUSTMENT

Receivers equipped with a 50 cycle power transformer have a "high" and "low" voltage tap on the under side of the chassis. The "high" voltage lead (BLACK) and the "low" voltage lead (ORANGE) are connected to a terminal strip near the transformer.

The voltage range of the "low" tap of the 95-130 volt transformer is from 95 to 112½ volts and of the "high" tap is from 112½ to 130 volts. The range of the "low" tap of the 190-260 volt transformer is from 190 to 225 volts and of the "high" tap is from 225 to 260 volts.

The accompanying illustration shows the connections for changing from high to low or low to high line voltage. Note the "jumper" wire which is attached to the terminal at which one side of the power cord is attached. The other end of this jumper wire should be connected to the ORANGE or BLACK lead of the transformer primary, according to the line voltage the receiver is to be used on.

NOTE: Any change made in the power supply circuit of the receiver should be plainly stamped or otherwise permanently recorded on the rear of the chassis.

ALIGNMENT PROCEDURE

All the circuits in this receiver are very accurately adjusted at the factory and normally should need no further adjustment. However, if it is definitely known that an adjustment is necessary the circuits may be properly aligned with the use of a modulaed signal generator and an output meter.

CONNECTING OUTPUT METER

Connect the output meter to the plates of the two 6K6G Output tubes. Be certain that the meter is protected from D. C. by connecting a condenser (.1 mfd. or larger—not electrolytic) in series with one of the leads.

Tuning I-F Amplifier to 455 Kilocycles.

(a) Connect the output of the signal generator through a .02 mfd. condenser to the top cap of the 6A8G tube, leaving the tube's grid lead in place. Connect the ground lead from the signal generator to the ground terminal of the receiver. KEEP THE GENERATOR LEADS AS FAR AS POSSIBLE FROM THE GRID LEADS OF THE OTHER SCREEN GRID TUBES.

(b) Set the station selector so that the tuning condenser plates are completely out of mesh. Turn the volume control knob to the right (ON) and turn the tone control knob to the left (TREBLE).

(c) Turn the band selector switch to the High Frequency Band.

(d) Set the signal generator to 455 kilocycles.

(e) Adjust both trimmers located on top of the 2nd I-F assm. for maximum output. (Item 9, Fig. 2)

(f) Adjust both trimmers located on top of the 1st I-F assm. for maximum output. (Item 8, Fig. 2)

(g) Check operations (e) and (f) for more accurate adjustment.

ALWAYS USE THE LOWEST SIGNAL GENERATOR OUTPUT THAT WILL GIVE A REASONABLE OUTPUT METER READING.

Aligning R-F Amplifier.

When aligning the R-F amplifier the output lead from the signal generator is connected to the "ANT" terminal of the receiver. For the Broadcast and Police Bands a .00025 mfd. condenser should be connected in series with the output lead of the signal generator and for the High Frequency band a 400 ohm carbon resistor should be used in place of the condenser.

Each band should first be shunt aligned and then series aligned where provision is made for series alignment (Broadcast Band). The band selector switch should be set for the band being aligned and the station selector and signal generator should be set to the frequency indicated for each adjustment, paragraph (c) below.

(a) Adjust the "OSC" and "ANT" shunt trimmers in the order given for maximum output. Readjust the station selector slighly so that the generator signal is tuned-in with maximum output and then check the adjustment of the "ANT" trimmer. DO NOT READJUST THE "OSC" TRIMMER.

NOTE: When shunt aligning the Police and High Frequency Bands care must be exercised so that the circuits will be aligned on the correct frequency rather than on the image frequency which is approximately 910 kilocycles less than the fundamental. To check on this, increase the output of the signal generator ten times, or more, to try to tune-in the signal both at the generator frequency as indicated on the station selector dial and at approximately 910 kilocycles less than the correct frequency. If the circuits have been properly aligned the signal can be tuned-in at both positions but much stronger at the correct frequency.

(b) To align the B. C. OSC. series trimmer (Fig 2), set the signal generator to the frequency indicated below and then tune-in this signal with the station selector for maximum output. To obtain the best adjustment for the series trimmer, it will be necessary to rotate the station selector back and forth slighly while adjusting the trimmer for maximum output.

(C) SIGNAL INPUT FREQUENCIES

	Shunt Alignment	Series Align.
American Broadcast Band	1700 Kilocycles	600 Kilocycles
Police & Amateur Band	6000	
Foreign Band	18 Megacycles	

WAVE TRAP

Some chassis of this model are equipped with a wave trap for the purpose of eliminating interference from code stations which operate on a frequency of approximately 455 kilocycles. This assembly is located on the underneath side of the chassis and consists of a coil, a fixed condenser and a trimmer condenser as illustrated by dotted lines in the Wiring Diagram (item 60).

The wave trap should not be adjusted until all other adjustments have been made. To make the adjustment, feed a 455 kilocycle signal from the signal generator through a .00025 mfd. condenser into the antenna terminal of the receiver. With the band selector switch turned to the Broadcast Band position, the gang condenser open and the volume control full on, adjust the trimmer condenser on the wave trap for minimum output.

Should the interfering station be operating on a frequency of slightly more or less than 455 kilocycles, the exact frequency should be determined with the aid of the signal generator. Then, instead of feeding a 455 kilocycle signal into the receiver the exact frequency of the interfering signal should be used. If it is not possible to determine the exact frequency of the interfering signal the antenna may be attached to the receiver and the receiver tuned to the position where the interfering signal is most noticeable. Then adjust the wave trap for minimum interference.

PARTS LIST—MODEL 817

Figures in first column refer to parts in Diagrams.

Item No.	Part No.	Name	Function
1	W —43567	Bulb, Dial Light, 6-8 V.	
	W —44364	Bracket, for Dial Light	
2	G139—32000	Ant. Coil, 535-1850 Kc.	
3	G138—32000	Ant. Coil, 1900-6600 Kc.	
4	G140—32000	Ant. Coil, 6.5-22 Mc.	
5	G139—32002	Osc. Coil, 535-1850 Kc.	
6	G138—32002	Osc. Coil, 1900-6600 Kc.	
7	G140—32002	Osc. Coil, 6.5-22 Mc.	
8	G153—32004	1st 1-F Assy.	
9	G154—32004	2nd 1-F Assy.	
10ZY	G41 —33001	2 Section Gang Cond.	
	D —44080	Glass Dial Face	
	W —44085B	Dial Mask (Paper)	
	W —44084	Dial Support Ring	
	C —44082	Support Brkt., Dial Glass	
	G1 —43564	Pulley and Hub Assy.	
	—41582	Drive Cord (11½ in. Req.)	
	W —44134	Drive Shaft	
	W —43549	Shaft Ret. Ring	
	W —43542B	Brkt. for Drive Shaft	
	W —43561	Drive Spring	
	W —44299	Dial Hand	
	W —40486	Pointer Mtg. Screw	
11	—40769	B-C. Osc. Series Trimmer	
12	G23 —34000	Condenser, 1560 Mmf.	
13	G20 —34000	Condenser, 4910 Mmf.	
14	G13 —34002	Condenser, 35 Mmf.	
15ABC	G2 —34002	Condenser, 100 Mmf.	
16	W —35936	Condenser, .05 Mf. 200 V.	
17	W —35139	Condenser, .004 Mf. 400 V.	
18	W —22688	Condenser, .1 Mf. 400 V.	
19	W —27652	Condenser, .003 Mf. 200 V.	
20	W —28621	Condenser, .02 Mf. 200 V.	
21	W —30488	Condenser, .02 Mf. 400 V.	
22	W —23615	Condenser, .05 Mf. 400 V.	
23	W —30805	Condenser, .01 Mf. 400 V.	
24	W —44054	Condenser, 30 Mf. 350 V.	
25	W —36057	Condenser, 40 Mf. 300 V.	
26	B —33906A	Power Cord and Plug	
27	—21237A	Resistor, 60,000 Ohm. ¼W.	
28	—22196	Resistor, 20,000 Ohm. ¼W.	
29	—44008	Resistor, 10,000 Ohm. 2W.	
30	—23616	Resistor, 15,000 Ohm. 1W.	
31	—31093	Resistor, 2,700 Ohm. ¼W.	
32	—35600	Resistor, 100,000 Ohm. ¼W.	
33	—21875	Resistor, 100,000 Ohm. ¼W.	

Item No.	Part No.	Name	Function
34AB	—21455C	Resistor, 300,000 Ohm. ¼W.	
35	—21454	Resistor, 1 Megohm ¼W.	
36AB	—26577	Resistor, 3 Megohm ¼W.	
37	—35322C	Resistor, 500,000 Ohm. ¼W.	
38AB	—23785	Resistor, 500,000 Ohm. ¼W.	
39	W —23012A	Resistor, 40 Ohm. ¾W. Flex.	
40	—34883	Resistor, 2 Megohm ¼W.	
41	W —21965	Resistor, 375 Ohm. 1W. Flex.	
42AB	—44009	Resistor, 3,000 Ohm. ¼W.	
43	G156—36400	Socket, Type 6A8	
44AB	G171—36400	Socket, Type 6U7	
45ABC	G172—36400	Socket, Type 6K6	
46	G160—36400	Socket, Type 6Q7	
47	G173—36400	Socket, Type 5Y3	
48	G103—28807	Socket, Type Speaker	
	W —40911	Tube Shield	
	W —27981A	Base, Tube Shield	
49	465BP—12"M"	Speaker Spec., 1-D-1049 "M"	
	—44272	V. C. and Cone Assy. for 465BP12"M" Spkr.	
	—44273	Field Coil for 465BP12"M" Spkr.	
	—44274	Output Trans. for 465BP12"M" Spkr.	
	W —43552	Spk. Plug Clamp	
50	—44049	Band Selector Switch	
51	G27 —26719	A1-A2-G. Terminal Assy.	
52	—44057	Power Trans., 110 V. 60 Cy.	
	—44058	Power Trans., 110 V. 50 Cy.	
	—44059	Power Trans., 220 V. 50 Cy.	
	—44060	Power Trans., 110 V. 25 Cy.	
	—44061	Power Trans., 220 V. 25 Cy.	
53	—44081	Volume Control, 1 Meg.	
54Z	—44024	Tone Control, 100,000 Ohm.	
54Y		Line Switch	
55	W —35951	3 Sect. Shunt Trimmer Assy.	
56	G3 —34002	Condenser, 500 Mmf.	
57	W —34647	Condenser, .006 Mf. 400 V.	
58	W —32378	Condenser, .01 Mf. 400 V.	
59	W —23013	Resistor, 2,000 Ohm. 1¼W. Flex.	
	W —44088	Knob	
	W —50164A	Knob	
	W —43553	Rubber Mtg. Foot	
	W —44225	Grille Bar (2)	
	—44092	Grille Cloth	
	—7C	Cabinet	
	B —44226B	Escutcheon	
60	G165—32004	Wave Trap	

Fig. 4 Phonograph Pickup

©John F. Rider, Publisher

MODEL 718

CROSLEY RADIO CORP.

Schematic Parts

512 W-44121 SOCKET TUNING IND.
51Y RES TO MEG PART OF TUN. IND. SOCKET
52 G5-34002 COND. 50 μμf MICA
47 G1-26719 TERM. BOARD A.-G.
48 G193-32004 WAVE TRAP
50 G41-26719 TERM BOARD PHONO

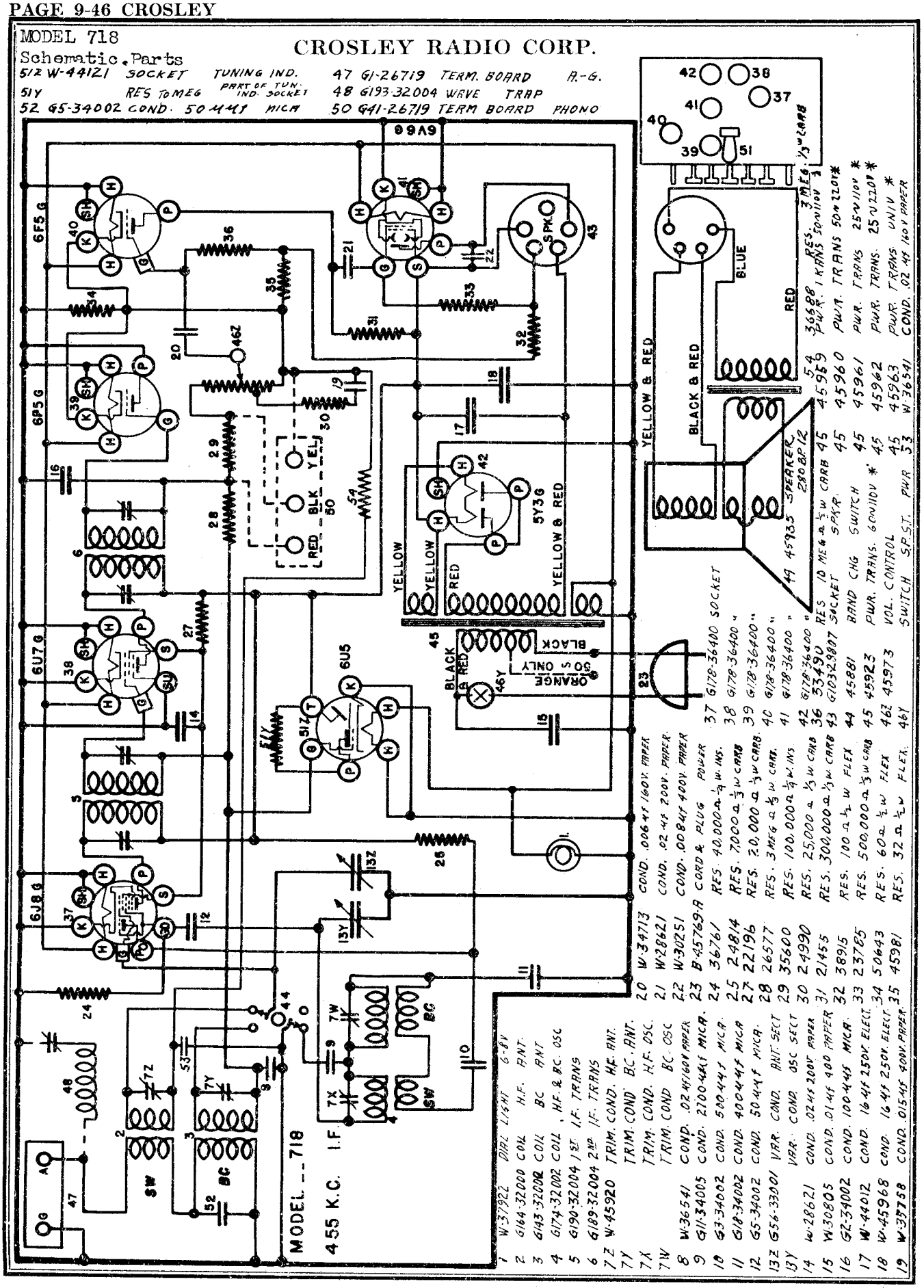

1 W-37922 DIAL LIGHT 6-8V
2 G164-32000 COIL H.F. ANT.
3 G143-32002 COIL BC ANT
4 G174-32002 COIL H.F. & BC. OSC
5 G190-32004 1ST I.F. TRANS
6 G189-32004 2ND I.F. TRANS
7Z W-45920 TRIM. COND. H.F. ANT.
7Y TRIM. COND. BC. ANT.
7X TRIM. COND. H.F. OSC.
7W TRIM. COND BC. OSC
8 W-36541 COND. .02 μf 160V PAPER
9 G11-34005 COND. 2700 μμf MICA.
10 G3-34002 COND. 500 μμf MICA.
11 G18-34002 COND. 400 μμf MICA
12 G5-34002 COND. 50 μμf MICA.
13Z G56-33001 VAR. COND. ANT. SECT
13Y VAR. COND. OSC SECT
14 W-28621 COND. .02 μf 200V PAPER
15 W-30805 COND. .01 μf 400 PAPER
16 G2-34002 COND. 100 μμf MICA.
17 W-44012 COND. 16 μf 250V ELECT.
18 W-45968 COND. 16 μf 250V ELECT.
19 W-35758 COND. .015 μf 400V PAPER.
20 W-34713 COND. .006 μf 160V. PAPER
21 W-28621 COND. .02 μf 200V. PAPER.
22 W-30251 COND. .008 μf 400V. PAPER
23 B-45769-A CORD & PLUG POWER
24 36761 RES. 40,000 Ω 1/4 W. INS.
25 24814 RES. 7,000 Ω 1/3 W CARB
27 22196 RES. 20,000 Ω 1/3 W CARB.
28 26577 RES. 3 MEG Ω 1/3 W CARB.
29 35600 RES. 100,000 Ω 1/4 W. INS.
30 24990 RES. 25,000 Ω 1/3 W. CARB
31 21455 RES. 300,000 Ω 1/3 W CARB
32 38915 RES. 100 Ω 1/2 W FLEX
33 23785 RES. 500,000 Ω 1/3 W CARB
34 50643 RES. 60 Ω 1/2 W FLEX
35 45981 RES. 32 Ω 1/2 W FLEX.
37 G178-36400 SOCKET
38 G178-36400 "
39 G178-36400 "
40 G178-36400 "
41 G178-36400 "
42 G178-36400 "
36 33490 RES 10 MEG Ω 1/2 W CARB
43 G103-29807 SOCKET SPKR.
44 45881 BAND CHG SWITCH
45 45923 PWR. TRANS. 60~110V *
46Z 45973 VOL. CONTROL
46Y SWITCH S.P.S.T. PWR
49 45935 SPEAKER 280 BP 12
54 36688 RES. 3 MEG. 1/3 W CARB
45 45959 PWR. TRANS 50~110V *
45 45960 PWR. TRANS 50~220V *
45 45961 PWR. TRANS 25~110V *
45 45962 PWR. TRANS. 25~220V *
45 45963 PWR. TRANS. UNIV *
53 W-36541 COND. .02 μf 160V PAPER

©John F. Rider, Publisher

MODEL 1117 Early
Schematic, Socket

CROSLEY RADIO CORP.

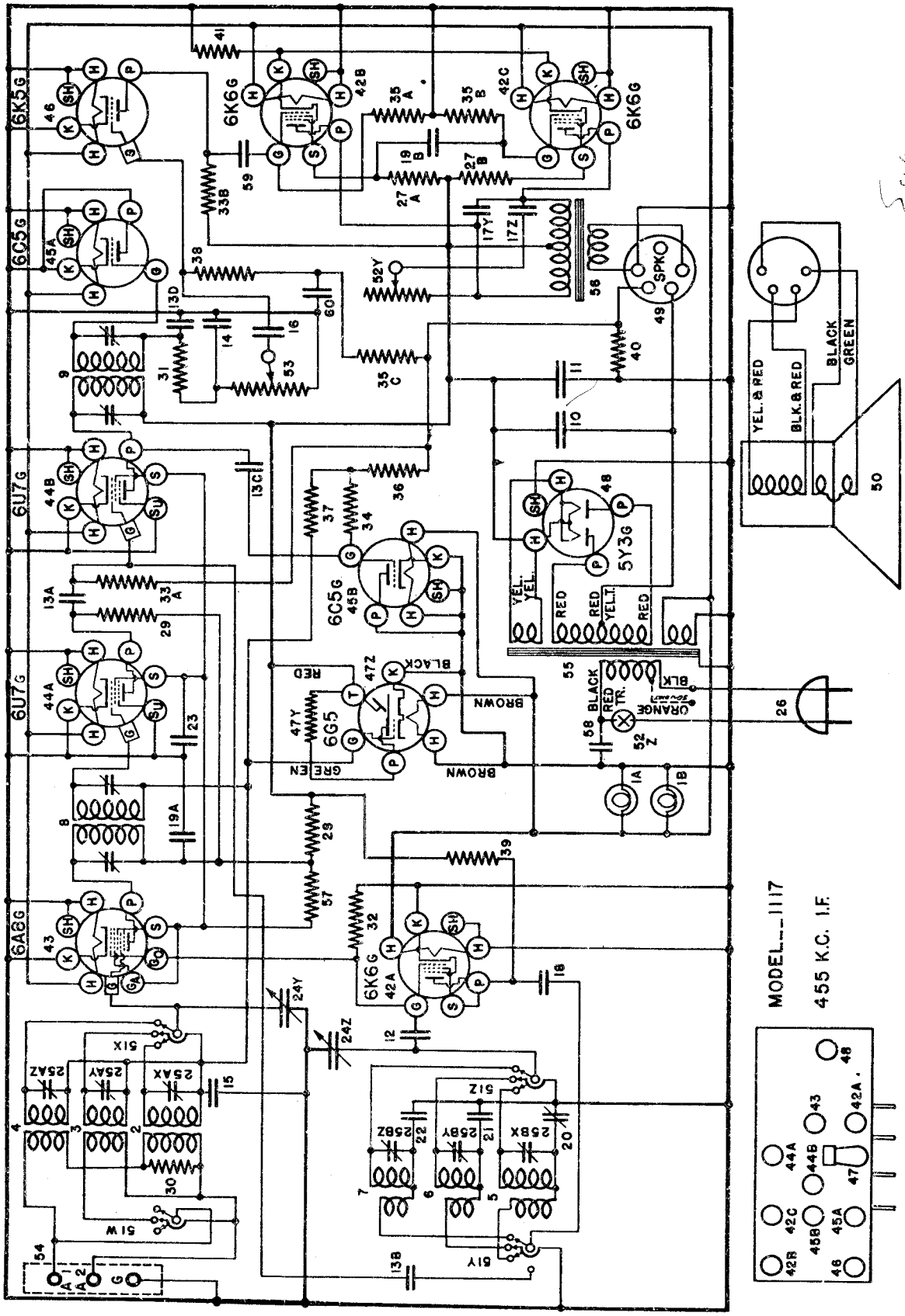

FIG. 1-B—WIRING DIAGRAM—MODEL 1117 SERIES 1

©John F. Rider, Publisher

MODEL 1117 Late
Schematic, Socket

CROSLEY RADIO CORP.

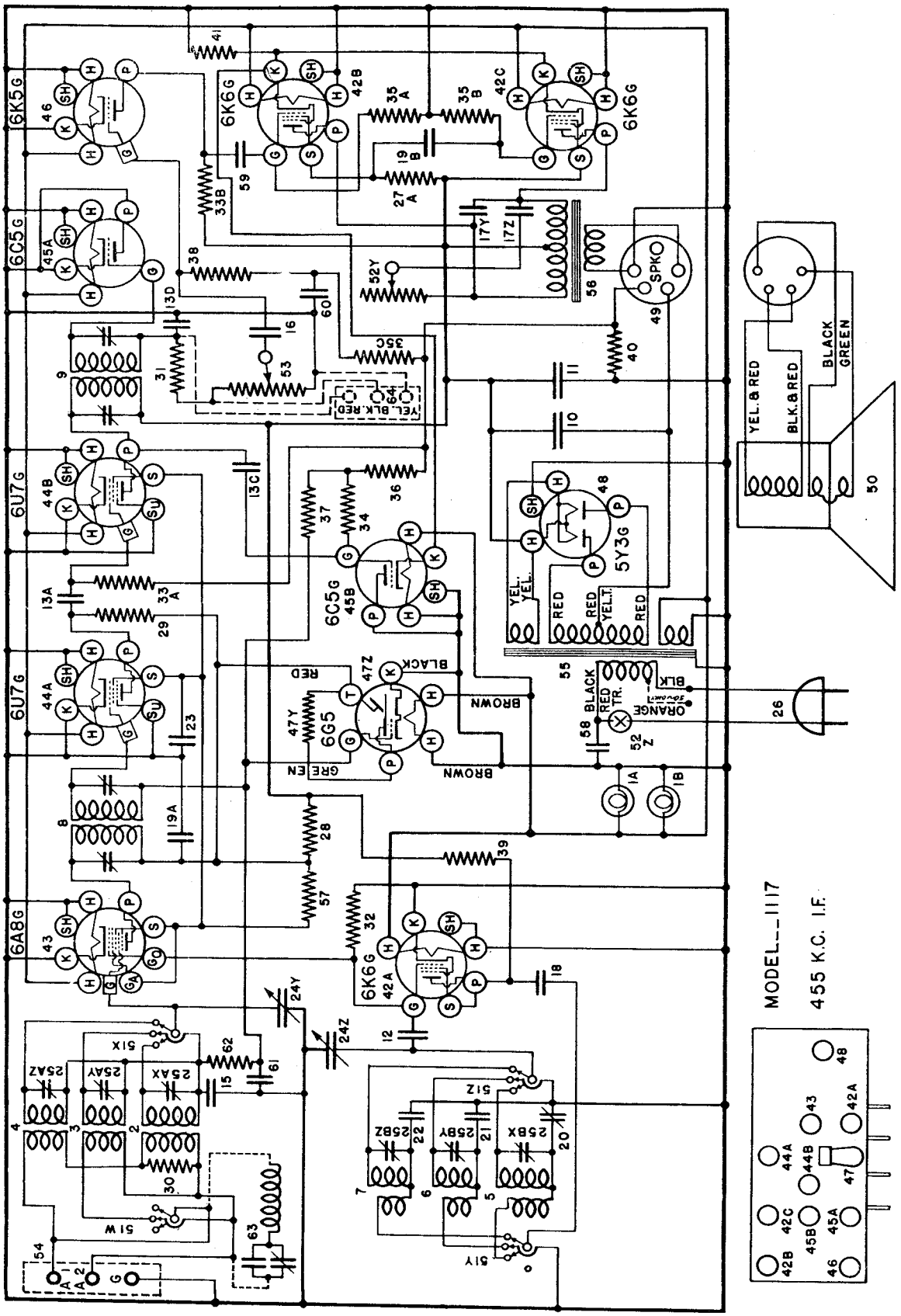

FIG. 1-A—WIRING DIAGRAM—MODEL 1117 SERIES 2

©John F. Rider, Publisher

©John F. Rider, Publisher

This model Crosley radio is an AC receiver designed for American and Foreign broadcast reception. The tuning range is from 540 kilocycles to 22 megacycles and is divided into three bands as follows:

540-1850 Kilocycles or 555-162 Metres (American Broadcast Band)
1.9- 6.6 Megacycles or 158-45.5 Metres (Police & Amateur Band)
6.4- 22 Megacycles or 47-13.5 Metres (High Frequency or Foreign Band)

Circuit Description

Eleven tubes are employed in a superheterodyne circuit. The 6G5 electron ray tube is used for indicating exact tuning and is designated IRIS TUNING INDICATOR. When a station is tuned-in, the greenish glow on each side of the tube increases in width, forming a narrow shadow at the bottom of the window. Only strong signals, however, will reduce the shadow to a narrow line.

The circuit consists of separate oscillator and modulator tubes, two stages of I-F amplification—the second of which is resistance coupled, separate AVC and detector diodes, two stages of audio amplification and power supply. The speaker field is located in the negative leg of the power supply. The bias for all tubes except the output is developed across a 32 ohm resistor, item 40, located between the speaker field and ground. Phase inversion is obtained in the output circuit by the voltage developed across a 3000 ohm resistor, item 27A, located in the screen circuit of one of the output tubes, item 42B.

SOCKET VOLTAGES

The tube socket voltages are measured from the tube socket contacts to the chassis with 1000 ohm per volt, 500 volt D. C. voltmeter (except filaments) with the receiver in operating condition and no signal input. The volume control should be turned full on, the tone control should be turned to the TREBLE position (counter-clockwise) and the tuning condenser should be turned to the minimum capacity position. The filament voltages should be measured with an accurate low range A. C. voltmeter (approximately 0-10 volts). Readings may vary plus or minus 10% of values given.

CIRCUIT CHANGES

Fig. 1-A is a revised Wiring Diagram, showing the following circuit changes after serial No. 1343902:

Item 13B Part No. G2-34002, 100 mmf. cond. deleted.
" 14 Part No. G1-34002, 250 mmf. cond. deleted.
" 27B Part No. 44009, 3000 ohm ¼-w resistor deleted.
" 41 Part No. W-21965, 375 ohm 1 W resistor superseded by Part No. 22873.
" 61 Part No. W-28621 added.
" 62 Part No. 35600 added.

In the later series a shielded lead between items 16 and 53 was found to reduce audio degeneration and thus materially improve the tone quality.

50 CYCLE POWER TRANSFORMER ADJUSTMENT

Receivers equipped with a 50 cycle power transformer have a "high" and "low" voltage tap on the under side of the chassis. The "high" voltage lead (BLACK) and the "low" voltage lead (ORANGE) are connected to a terminal strip near the transformer.

The voltage range of the "low" tap of the 95-130 volt transformer is from 95 to 112½ volts and of the "high" tap is from 112½ to 130 volts. The range of the "low" tap of the 190-260 volt transformer is from 190 to 225 volts and of the "high" tap is from 225 to 260 volts.

The accompanying illustration shows the connections for changing from high to low or low to high line voltage. Note the "jumper" wire which is attached to the terminal at which one side of the power cord is attached. The other end of this jumper wire should be connected to the ORANGE or BLACK lead of the transformer primary, according to the line voltage the receiver is to be used on.

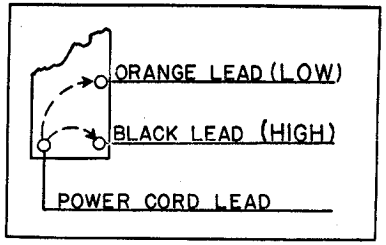

NOTE: Any change made in the power supply circuit of the receiver should be plainly stamped or otherwise permanently recorded on the rear of the chassis.

ALIGNMENT PROCEDURE

All the circuits in this receiver are very accurately adjusted at the factory and normally should need no further adjustment. However, if it is definitely known that an adjustment is necessary the circuits may be properly aligned with the use of a modulated signal generator and an output meter.

CONNECTING OUTPUT METER

Connect the output meter to the plates of the two 6K6G output tubes. Be certain that the meter is protected from D. C. by a condenser (.1 mfd. or larger—not electroyltic) in series with one of the leads.

Tuning The I-F Amplifier To 455 Kilocycles.

(a) Connect the output of the signal generator through a .02 mfd. condenser to the top cap of the 6A8G tube, leaving the tube's grid clip in place. Connect the ground lead from the signal generator to the ground terminal of the receiver. KEEP THE GENERATOR LEADS AS FAR AS POSSIBLE FROM THE GRID LEADS OF THE OTHER SCREEN GRID TUBES.

(b) Set the station selector so that the tuning condenser plates are completely out of mesh. Turn the volume control knob to the right (ON) and turn the tone control knob to the left (TREBLE).

(c) Set the band selector switch on the Broadcast Band.

(d) Set the signal generator to 455 kilocycles.

(e) Adjust both trimmers located on top of the 2nd I-F transformer for maximum output.

(f) Adjust both trimmers located on top of the 1st I-F transformer for maximum output.

(g) Check operations (e) and (f) for more accurate adjustment.

ALWAYS USE THE LOWEST SIGNAL GENERATOR OUTPUT THAT WILL GIVE A REASONABLE OUTPUT METER READING.

Aligning The R-F Amplifier.

When aligning the R-F amplifier the output lead from the signal generator is connected to the "ANT" terminal of the receiver. For the Broadcast Band a .00025 mfd. condenser should be connected in series with the output lead of the signal generator and for the High Frequency and Police Bands a 400 ohm carbon resistor should be used in place of the condenser.

Each band should first be SHUNT ALIGNED and then SERIES ALIGNED where provision is made for series alignment (Broadcast Band). The band selector switch should be set for the band being aligned and the signal generator should be set to the frequency indicated for each adjustment, pp (d) below.

(a) With the station selector adjusted so that the tuning condenser plates are completely out of mesh, adjust the "OSC" shunt trimmer until the MINIMUM CAPACITY SIGNAL (d) is heard (it is not necessary that the receiver tune through this signal).

(b) Adjust the station selector so that the SHUNT ALIGNMENT SIGNAL (d) is tuned-in with maximum output. Then adjust the "ANT" shunt trimmer for maximum output. Readjust the station selector slightly so that the generator signal is tuned-in with maximum output and check the adjustment of the "ANT" trimmer. DO NOT READJUST THE OSCILLATOR TRIMMER.

NOTE: When shunt aligning the Police and High Frequency Bands care must be exercised so that the circuits will be aligned on the correct frequency rather than on the image frequency which is approximately 910 kilocycles less than the fundamental. To check on this, increase the output of the signal generator ten times, or more, and try to tune-in the signal both at the generator frequency as indicated on the station selector dial and at approximately 910 kilocycles less than the correct frequency. If the circuits have been properly aligned the signal can be tuned-in at both positions but much stronger at the correct frequency.

(c) To align the series trimmer (See Fig. 2), set the signal generator to the frequency indicated below (d) and then tune-in this signal with the station selector for maximum output. To obtain the best adjustment for the series trimmer, it will be necessary to rotate the station selector back and forth slightly while adjusting the trimmer for maximum output. Minor tolerance variations in series alignment at 2500 kilocycles in the Police Band and at 7000 kilocycles in the High Frequency Band may be compensated for by slight repositioning of the grid lead of the antenna coil in the Band affected.

(D) SIGNAL INPUT FREQUENCIES

	Min. Cap. Signal	Shunt Align.	Series Align.
American Broadcast Band	1850 Kilocycles	1700 Kilocycles	600 Kilocycles
Police & Amateur Band	6600 "	6000 "	
High Frequency Band	22 Megacycles	18 Megacycles	

WAVE TRAP

Some chassis of this model are equipped with a wave trap for the purpose of eliminating interference from code stations which operate on a frequency of approximately 455 kilocycles. This assembly is located on the underneath side of the chassis and consists of a coil, a fixed condenser and a trimmer condenser as illustrated by dotted lines in the Wiring Diagram. Item 63, Fig. 1A.

The wave trap should not be adjusted until all other adjustments have been made. To make the adjustment, feed a 455 kilocycle signal from the signal generator through a .00025 mfd. condenser into the antenna terminal of the receiver. With the band selector switch turned to the Broadcast Band position, the gang condenser open and the volume control full on, adjust the trimmer condenser on the wave trap for minimum output.

Should the interfering station be operating on a frequency of slightly more or less than 455 kilocycles, the exact frequency should be determined with the aid of the signal generator. Then, instead of feeding a 455 kilocycle signal into the receiver the exact frequency of the interfering signal should be used. If it is not possible to determine the exact frequency of the interfering signal the antenna may be attached to the receiver and the receiver tuned to the position where the interfering signal is most noticeable. Then adjust the wave trap for minimum interference.

©John F. Rider, Publisher

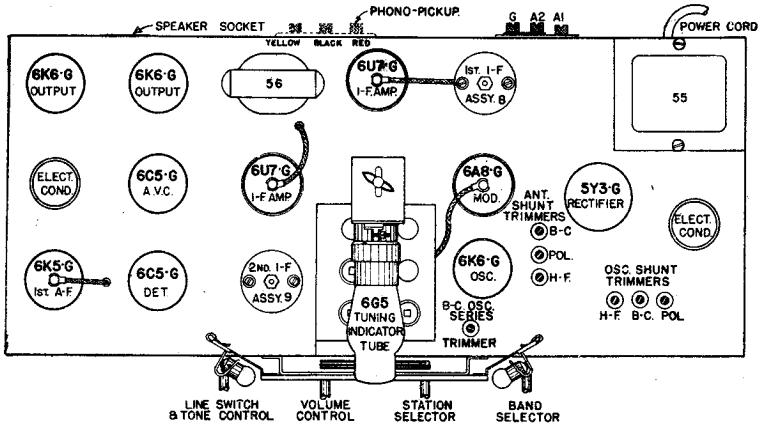

Fig. 2 Top View Model 1117

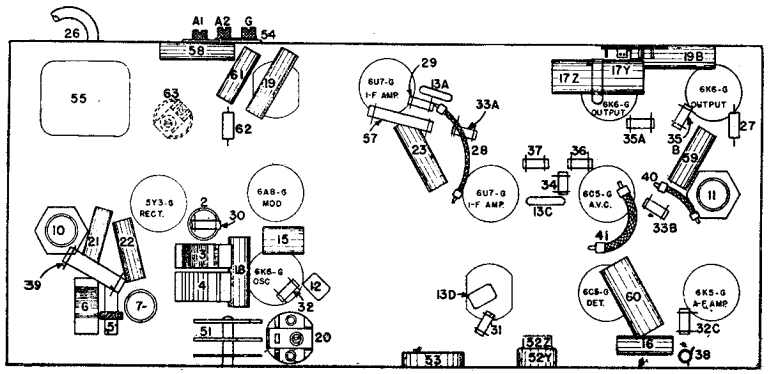

Fig. 3 Bottom View Model 1117

PARTS LIST—MODEL 1117

Figures in first column refer to parts in Diagrams.

Item No.	Part No.	Description
1AB	W —43567	Dial Light Bulb
	G3 —44363	Dial Light Socket Assy.
2	G139—32000	Ant. Coil—535—1850 Kc.
3	G138—32000	Ant. Coil—1850—6600 Kc.
4	G141—32000	Ant. Coil—6.2—22 Mc.
5	G139—32002	Osc. Coil—535—1850 Kc.
6	G138—32002	Osc. Coil—1850—6600 Kc.
7	G141—32002	Osc. Coil—6.2—22 Mc.
8	G162—32004	1st 1-F Assembly—455 Kc.
9	G155—32004	2nd 1-F Assembly—455 Kc.
10	W —44054	Condenser, 30 Mf. 350 V.
11	W —36057B	Condenser, 40 Mf. 300 V.
12	G13 —34002	Condenser, .000035 Mf. Molded
13ACD	G2 —34002	Condenser, .0001 Mf. Molded
14		NONE
15	W —35936	Condenser, .05 Mf. 200 V.
16	W —41461	Condenser, .0014 Mf. 200 V.
17Z, 17Y	W —31052	Condenser, .05 Mf. 400 V.
17Y		Condenser, .004 Mf. 400 V.
18	W —35139	Condenser, .004 Mf. 400 V.
19AB	W —23615	Condenser, .05 Mf. 400 V.
20	—40769	B-C. Osc. Series Trimmer (520 Mmf.)
21	G23 —34000	Pol. Osc. Series Cond. (1560 Mmf.)
22	G20 —34000	H-F. Osc. Series Cond. (4910 Mmf.)
23	W —22688	Condenser, .1 Mf. 400 V.
24	G40 —33001	2 Section Var. Tuning Condenser
	MG14—44099	Cond. Mounting Bracket
	D —44143B	Dial Face (Glass)
	W —44146A	Dial Mask
	C —44110B	Dial Support Brkt.
	W —44127	Dial Hand (Pointer)
	W —40486	Hand Mtg. Screw
	W —44262	Dial Glass Support Ring
	W —44263	Dial Glass Support Arc
	—41582	Drive Cord - 20 Inches
	W —44134	Drive Shaft
	W —43549	Shaft Retaining Ring
	W —43542B	Shaft Bracket
	W —44500	Shaft Bearing
	G1 —43564	Drive Pulley Assy.
25	W —35951	3 Section Shunt Trimmer Assy.
26	B —33906A	Power Cord and Plug
27	—44009	Resistor, 3,000 Ohm ½W. Carb.
28	W —23013	Resistor, 2,000 Ohm 1½W. Flex.
29	—44165	Resistor, 5,000 Ohm ½W. Carb.
30	—22196	Resistor, 20,000 Ohm ½W. Carb.
31	—36320	Resistor, 120,000 Ohm ¼W. Carb.
32	—21237A	Resistor, 60,000 Ohm ¼W. Carb.
33AB	—21875	Resistor, 100,000 Ohm ¼W. Carb.
34	—34020	Resistor, 250,000 Ohm ¼W. Carb.
35ABC	—23785	Resistor, 500,000 Ohm ¼W. Carb.

Item No.	Part No.	Description
36	—37590	Resistor, 750,000 Ohm ¼W. Carb.
37	—21454	Resistor, 1 Megohm ¼W. Carb.
38	—26577	Resistor, 3 Megohm ¼W. Carb.
39	—44008	Resistor, 10,000 Ohm 2W. Carb.
40	W —37631	Resistor, 32 Ohm ½W. Flex.
41	W —22873	Resistor, 220 Ohm 1½W. Flex.
42ABC	G172—36400	Socket, Type 6K6
43	G156—36400	Socket, Type 6A8
44AB	G171—36400	Socket, Type 6U7
45AB	G152—36400	Socket, Type 6C5
46	G9 —43900	Socket, Type 6K5
47Z, 47Y	W —44121	Socket, Type 6G5
47Y		1 Meg. Resistor in Socket
48	G173—36400	Socket, Type 5Y3
49	G103—28807	Socket for Speaker
	W —27981A	Tube Shield Base
	W —40911	Tube Shield
	MG17—44099	Bracket Assy. with 6G5 Socket
	W —44137	Bracket for MG17-44099
	W —23880A	Thumb Screw
50	566BP18 "M"	Speaker, Spec. No. 1-D-1052
	—44275	V. C. and Cone Assy. for 566BP18 "M" Spkr.
	—44276	Field Coil Assy. for 566BP1 "M" Spkr.
51	—44049	Band Selector Switch
52Z, 52Y	—44024	Line Switch
52Y		Tone Control (100,000 Ohm)
53	—44081	Volume Control—1 Meg.
54	G27 —26719	Ant. and Gnd. Term. Assy.
55	—44101	Power Trans., 110 V. 60 Cy.
	—44104	Power Trans., 110 V. 50 Cy.
	—44105	Power Trans., 220 V. 50 Cy.
	—44102	Power Trans., 110 V. 25 Cy.
	—44103	Power Trans., 220 V. 25 Cy.
56	G77 —24628	Output Transformer
57	—4921C	Resistor, 10,000 Ohm 1W.
58	W —30805	Condenser, .01 Mf. 400 V.
59	W —30488	Condenser, .02 Mf. 400 V.
60	W —34712	Condenser, .25 Mf. 160 V.
61	W —28621	Condenser, .02 Mf. 200 V.
62	—35600	Resistor, 100,000 Ohm ¼W.
63	G164—32004	Wave Trap
	W —43553	Rubber Mtg. Foot
	W —44380	Knob (2)
	W —44426	Knob (2) (Pointer
	W —43552	Spkr. Plug Clamp
	B —44207A	Escutcheon—Dial
	W —44208B	Escutcheon—Tun. Indic. Tube
	— 7W	Cabinet

JULY, 1937

CHASSIS MODEL 1117

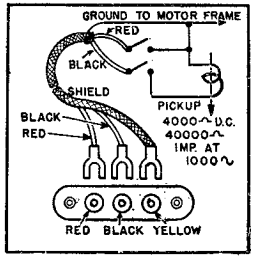

Fig. 4 Phonograph Pickup

TUBE SOCKET VOLTAGE READINGS

Tube	Function	H	P	S	G	K	Go	Ga
6K6G	Oscillator	6.3	147	147	-36	0	—	—
6A8G	Modulator	6.3	224	110	—	0	-36	110
6U7G	1st I-F Amplifier	6.3	174	110	—	0	—	—
6U7G	2nd I-F Amplifier	6.3	270	110	—	0	—	—
6C5G	Diode Detector	6.3	0	—	—	0	—	—
6C5G	AVC Diode	6.3	0	—	—	0	—	—
6K5G	1st A-F Amplifier	6.3	190	—	—	0	—	—
6K6G	Output	6.3	263	250	0	22	—	—
6K6G	Output	6.3	263	270	0	22	—	—
5Y3G	Rectifier	5.0	—	—	—	270	—	—
6G5	Tuning Indicator	6.3	Variable					

Power consumption approximately 90 watts at 117.5 volts.
Power output approximately 10 watts.
Voltage drop across speaker field 60 volts.

MODEL 1127
Schematic
Socket

CROSLEY RADIO CORP.

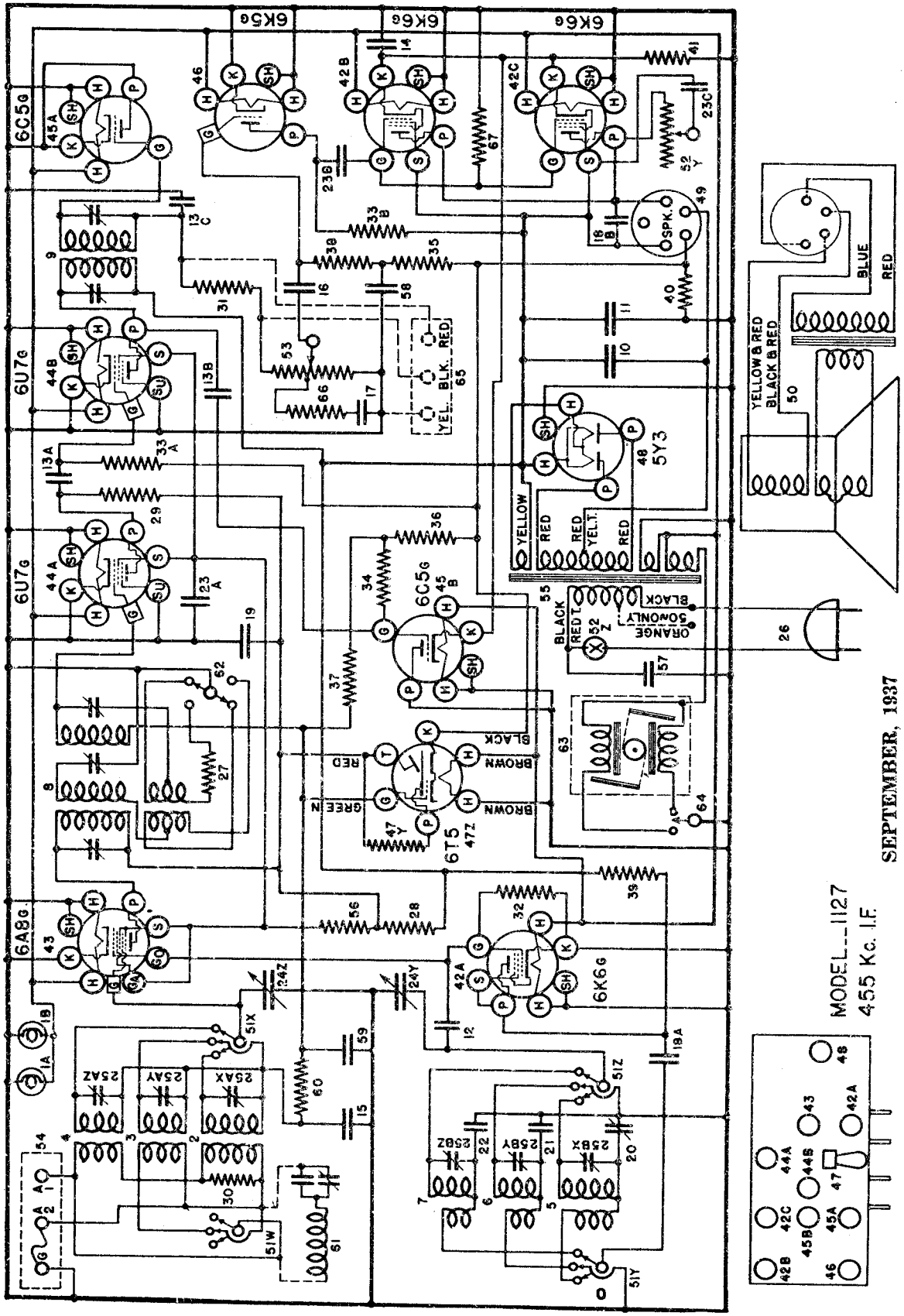

©John F. Rider, Publisher

MODEL 1127
Socket, Trimmers
Layout, Voltage

CROSLEY RADIO CORP.

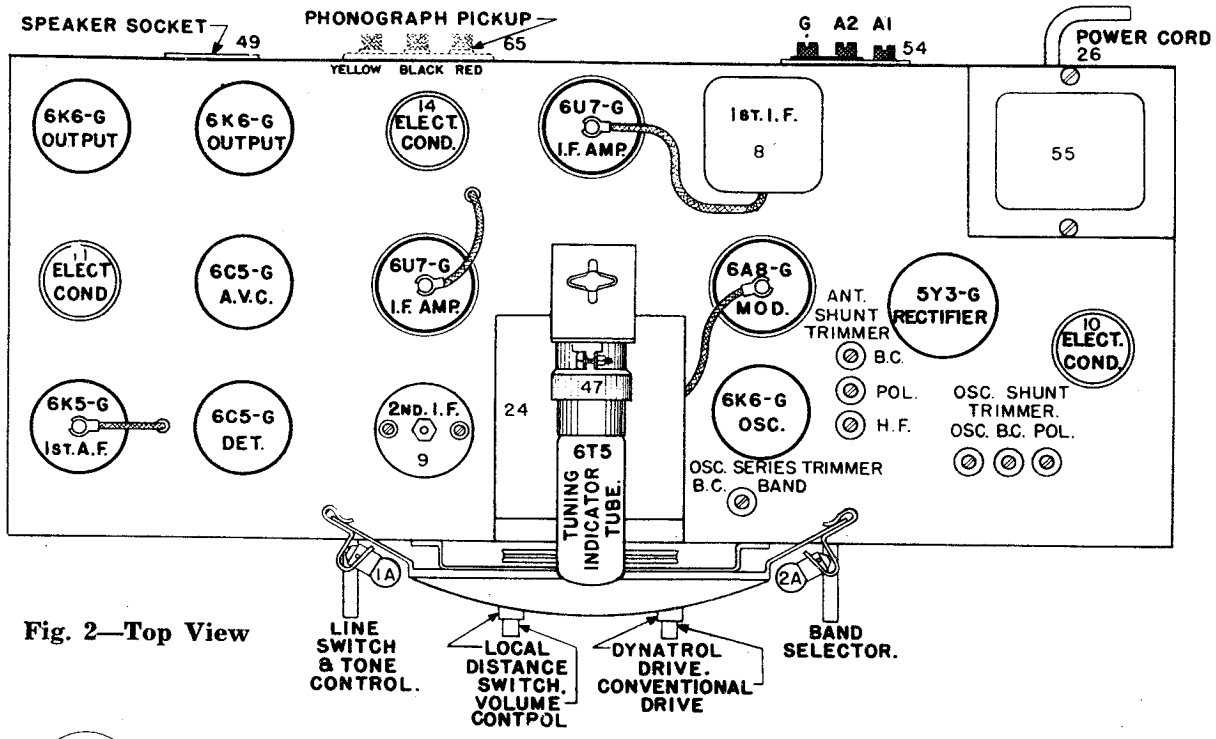

Fig. 2—Top View

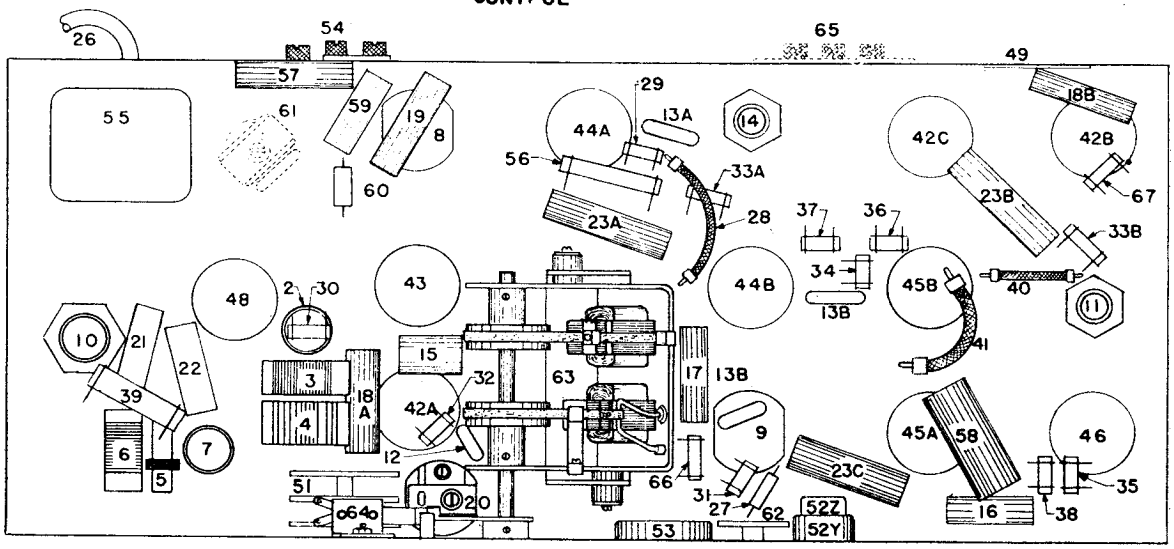

Fig. 3—Bottom View Model 1127

TUBE SOCKET VOLTAGE READINGS

Tube	Function	H	P	S	G	K	Go	Ga
6K6G	Oscillator	6.3	147	147	-36	0	—	—
6A8G	Modulator	6.3	224	110	—	0	-36	110
6U7G	1st I-F Amplifier	6.3	174	110	—	0	—	—
6U7G	2nd I-F Amplifier	6.3	270	110	—	0	—	—
6C5G	Diode Detector	6.3	0	—	—	0	—	—
6C5G	AVC Diode	6.3	0	—	—	0	—	—
6K5G	1st A-F Amplifier	6.3	190	—	—	0	—	—
6K6G	Output	6.3	263	250	0	22	—	—
6K6G	Output	6.3	263	250	0	22	—	—
5Y3G	Rectifier	5.0	—	—	—	270	—	—
6T5	Tuning Indicator	6.3	Variable					

Power consumption approximately 90 watts at 117.5 volts. (Tuning Motor 50 Watts Additional)
Power output approximately 10 watts.
Voltage drop across speaker field 60 volts.

©John F. Rider, Publisher

CROSLEY RADIO CORP.

MODEL 1127
Motor Assembly
Transformer Data
Phono., Data

This model Crosley radio is an AC receiver designed for American and Foreign broadcast reception. Electric tuning is accomplished in this model by means of the Dynatrol motor which is a vibrating type. Other features include electron ray tuning indicator, automatic volume control, Local-Distance switch and parallel pentode output. The tuning range is from 540 kilocycles to 22 megacycles and is divided into three bands as follows:

540-1850 Kilocycles or 555 162 Metres (American Broadcast Band)
1.9- 6.6 Megacycles or 158-45.5 Metres (Police and Amateur Band)
6.4- 22 Megacycles or 47-13.5 Metres (High Frequency or Short Wave Band).

SPECIAL POWER TRANSFORMER ADJUSTMENT

In localities where the voltage variation on 50 or 60 cycle power supply lines is greater than customary commercial limits, special 50-60 cycle power transformers are available. These transformers have a "high" and "low" voltage tap on the underside of the chassis. The "high" voltage lead (BLACK) and the "low" voltage lead (ORANGE) are connected to a terminal strip near the transformer.

The voltage range of the "low" tap of the 95-130 volt transformer is from 95 to 112½ volts and the "high" tap is from 112½ to 130 volts. The range of the "low" tap of the 190-260 volt transformer is from 190 to 225 volts and of the "high" tap is from 225 to 260 volts.

The accompanying illustration shows the connections for changing from high to low or low to high line voltage. Note the "jumper" wire which is attached to the terminal at which one side of the power cord is attached. The other end of this jumper wire should be connected to the ORANGE or BLACK lead of the transformer primary, according to the line voltage the receiver is to be used on.

NOTE: Any change made in the power supply circuit of the receiver should be plainly stamped or otherwise permanently recorded on the rear of the chassis.

Circuit Description

Eleven tubes are employed in a superheterodyne circuit. The 6T5 electron ray tube is used for indicating exact tuning and is designated "IRIS TUNING INDICATOR." When a station is tuned-in the greenish glow in the tube increases in width, forming a small circular shadow around the center disc. Only strong signals, however, will reduce the shadow to a very small circle.

The circuit consists of separate oscillator and modulator tubes, two stages of I-F amplification—the second of which is resistance coupled, separate AVC and detector diodes, two stages of audio amplification and power supply. The 1st I-F transformer is a triple-tuned unit, which in conjunction with the Local-Distance switch, controls the selectivity of the receiver. The speaker field is located in the negative leg of the power supply. The bias for all tubes except the output and AVC diode is developed across a 32 ohm resistor, item 40, located between the speaker field and ground.

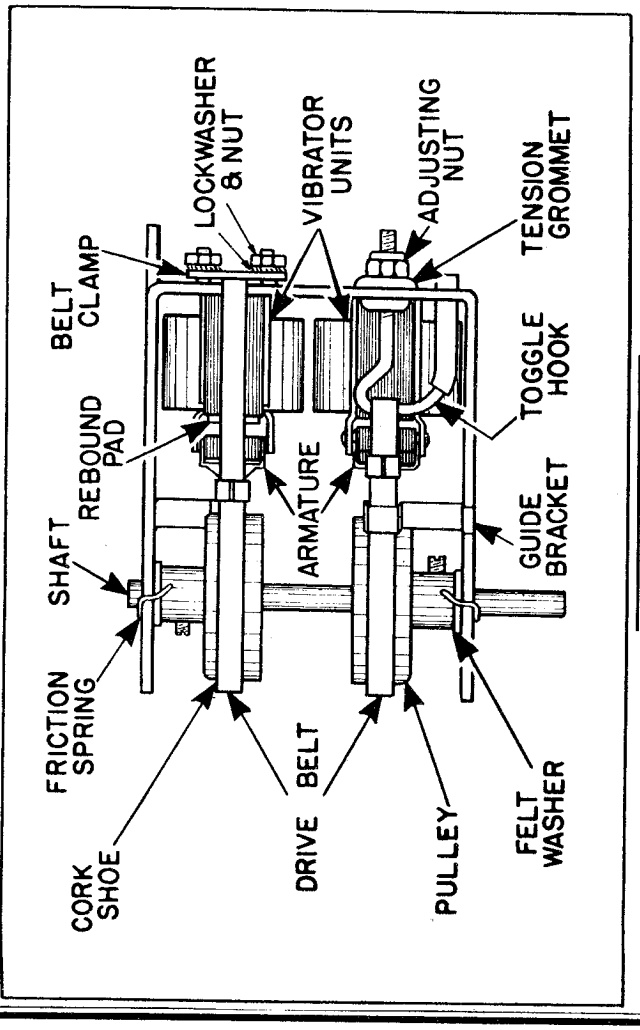

Fig. 5—Dynatrol Motor

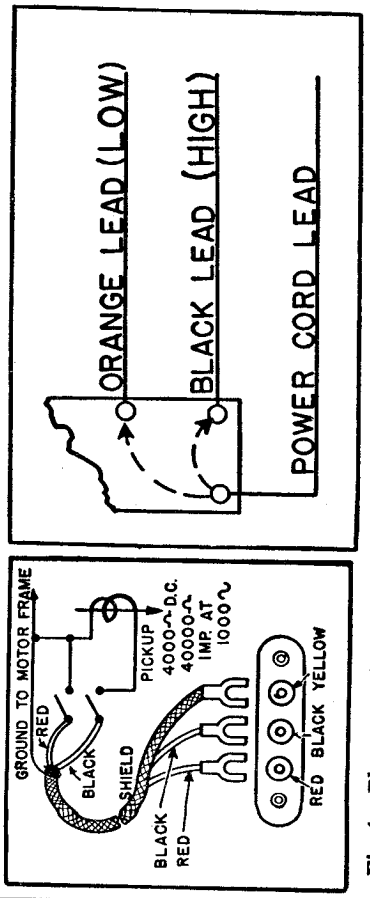

Fig 4—Phonograph Pickup

©John F. Rider, Publisher

©John F. Rider, Publisher

CONNECTING OUTPUT METER

Connect the output meter to the plates of the two 6K6C output tubes. Be certain that the meter is protected from D. C. by a condenser (.1 mfd. or larger—not electrolytic) in series with one of the leads.

Tuning The I-F Amplifier To 455 Kilocycles.

(a) Connect the output of the signal generator through a .02 mfd. condenser to the top cap of the 6U7G 1st I-F Amp. tube, leaving the tube's grid clip in place. Connect the ground lead from the signal generator to the ground terminal of the receiver. KEEP THE GENERATOR LEADS AS FAR AS POSSIBLE FROM THE GRID LEADS OF THE OTHER SCREEN GRID TUBES.

(b) Set the station selector so that the tuning condenser plates are completely out of mesh. Turn the volume control knob to the right (ON) and turn the tone control knob to the left (TREBLE).

(c) Set the band selector switch on the Broadcast Band.

(d) Turn the Local-Distance switch to the "Distance" position.

(e) Set the signal generator to 455 kilocycles.

(f) Adjust both trimmer condensers located on top of the 2nd I-F transformer for maximum output. DO NOT ADJUST THE TRIMMER CONDENSERS LOCATED ON THE 2ND I-F TRANSFORMER WITH THE SIGNAL GENERATOR LEAD CONNECTED TO THE 6A8G TUBE.

(g) Transfer the signal generator lead to the top cap of the 6A8G tube, leaving the tube's grid clip in place.

(h) Close the middle trimmer of the 1st I-F transformer. (Do not force adjustment screw).

(i) Adjust the top and then the bottom trimmers of the 1st I-F transformer for maximum output.

(j) Adjust the middle trimmer of the 1st I-F transformer for maximum output.

ALWAYS USE THE LOWEST SIGNAL GENERATOR OUTPUT THAT WILL GIVE A REASONABLE OUTPUT METER READING.

Aligning The R-F Amplifier.

When aligning the R-F amplifier the output lead from the signal generator is connected to the "ANT" terminal of the receiver. For the Broadcast Band a 200 mmf. condenser should be connected in series with the output lead of the signal generator and for the High Frequency and Police Bands a 400 ohm carbon resistor should be used in place of the condenser.

Each band should first be SHUNT ALIGNED and then SERIES ALIGNED where provision is made for series alignment (Broadcast Band). The band selector switch should be set for the band being aligned and the signal generator should be set to the frequency indicated for each adjustment, ¶ (D) below.

(a) With the station selector adjusted so that the tuning condenser plates are completely out of mesh, adjust the "OSC" shunt trimmer until the MINIMUM CAPACITY SIGNAL (D) is heard (it is not necessary that the receiver tune through this signal).

(b) Adjust the station selector so that the SHUNT ALIGNMENT SIGNAL (D) is tuned-in with maximum output. Then adjust the "ANT" shunt trimmer for maximum output. Readjust the station selector slightly so that the generator signal is tuned-in with maximum output and check the adjustment of the "Ant" trimmer. DO NOT READJUST THE OSCILLATOR TRIMMER.

NOTE: When shunt aligning the Police and High Frequency Bands, care must be exercised so that the circuits will be aligned on the correct frequency rather than on the image frequency which is approximately 910 kilocycles less than the fundamental. To check on this, increase the output of the signal generator ten times or more, and try to tune-in the signal both at the generator frequency as indicated on the station selector dial and at approximately 910 kilocycles less than the correct frequency. If the circuits have been properly aligned the signal can be tuned-in at both positions but much stronger at the correct frequency.

(c) To align the series trimmer (See Fig. 2), set the signal generator to the frequency indicated below (D) and then tune-in this signal with the station selector for maximum output. To obtain the best adjustment for the series trimmer, it will be necessary to rotate the station selector back and forth slightly while adjusting the trimmer for maximum output. Minor tolerance variations in series alignment at 2600 kilocycles in the Police Band and at 7,000 kilocycles in the High Frequency Band may be compensated for by slight repositioning of the grid lead of the antenna coil in the Band affected.

(D) SIGNAL INPUT FREQUENCIES

	Min. Cap. Signal	Shunt Align.	Series Align.
American Broadcast Band	1850 Kilocycles	1700 Kilocycles	600 Kilocycles
Police & Amateur Band	6600 Kilocycles	6000 Kilocycles	
High Frequency Band	22 Megacycles	18 Megacycles	

WAVE TRAP

Some chassis of this model are equipped with a wave trap for the purpose of eliminating interference from code stations which operate on a frequency of approximately 455 kilocycles. This assembly is located on the underneath side of the chassis and consists of a coil, a fixed condenser and a trimmer condenser as illustrated by dotted lines in the Wiring Diagram. Item 61, Fig. 1.

The wave trap should not be adjusted until all other adjustments have been made. To make the adjustment, feed a 455 kilocycle signal from the signal generator through a 200 mmf. condenser into the antenna terminal of the receiver. With the band selector switch turned to the Broadcast Band position, the gang condenser open and the volume control full on, adjust the trimmer condenser on the wave trap for minimum output.

Should the interfering station be operating on a frequency of slightly more or less than 455 kilocycles, the exact frequency should be determined with the aid of the signal generator. Then, instead of feeding a 455 kilocycle signal into the receiver the exact frequency of the interfering signal should be used. If it is not possible to determine the exact frequency of the interfering signal the antenna may be attached to the receiver and the receiver tuned to the position where the interfering signal is most noticeable. Then adjust the wave trap for minimum interference.

DYNATROL MOTOR

Should either vibrator unit of the Dynatrol motor need readjustment, the following procedure should be followed:

(a) Loosen adjusting nut until the gap between the armature and "E" laminations is approximately 3/16".

The belt should be just loose enough that the drive shaft can be rotated freely between the thumb and forefinger.

(b) With the motor running, tighten the adjusting nut until chatter stops. Care should be taken, however, not to tighten this adjustment too tight as an unstable condition will be reached wherein a slight change may result in a locked motor.

(c) Check the time required for the dial pointer to travel from each end of the dial to the other. The adjusting screws should be set so that approximately eight seconds are required in each direction.

PARTS LIST—MODEL 1127

Figures in first column refer to parts in Diagrams.

Item	Part No.	Description
1AB	W —43567	Dial Light 6-8 V.
2	G139 —32000	Ant. Coil B. C.
3	G138 —32000	Ant. Coil Pol.
4	G156 —32000	Ant. Coil H. F.
5	G139 —32002	Osc. Coil B. C.
6	G138 —32002	Osc. Coil Pol.
7	G160 —32002	Osc. Coil H. F.
8	G161 —32004	1st I-F Assy.
9	G154 —32004	2nd I-F Assy.
10	W —44054	Condenser 30 Mf. 350 V.
11	W —36057B	Condenser 40 Mf. 300 C.
12	G13 —34002	Condenser .000035 Mf. Molded
13A	G2 —34002	Condenser .0001 Mf. Molded
13B	G2 —34002	Condenser .0001 Mf. Molded
13C	G2 —34002	Condenser .0001 Mf. Molded
14	W —41598	Condenser 50 Mf. 25 V.
15	W —35936	Condenser .05 Mf. 200 V.
16	W —41461	Condenser .0014 Mf. 200 V.
17	W —28619	Condenser .006 Mf. 200 V.
18A	W —35139	Condenser .004 Mf. 400 V.
18B	W —35139	Condenser .004 Mf. 400 V.
19	W —23615	Condenser .05 Mf. 400 V.
20	—40769	Trimmer B. C. Osc. Series
21	G23 —34000	Condenser .001560 Mf.
21	G20 —34000	Condenser .004910 Mf.
23A	W —22688	Condenser .1 Mf. 400 V.
23B	W —22688	Condenser .1 Mf. 400 V.
23C	W —22688	Condenser .1 Mf. 400 V.
24	G40 —33001	2 Sect. Var. Tuning Cond.
	—44475A	Dial Face (Glass)
	W —44127	Pointer
	W —40486	Screw (Pointer Mtg.)
	W —44146A	Dial Mask (Metal Disc.)
	— 2045	(Pointer) Shakeproof Washer
	C —44110C	Dial Glass Support Brkt.
	W —44479	Drive Shaft Bracket
	W —44480A	Drive Shaft Sleeve
	MG21—44464	Drive Shaft & Coupling
	G1 —43564	Pulley & Hub Assy.
	—41582	Drive Cord
	W —43561	Spring Cord Tension
	G1 —44470	Switch Arm & Hub Assy.
	W —44262A	Dial Support Ring
	W —44263A	Dial Support Arc.
25	W —35951A	3 Sect. Trimmer Assy.
26	B —33906A	Power Cord & Plug
27	—42401B	Resistor 99 Ohm ¼ W. Ins.
28	W —23013	Resistor 2,000 Ohm 1¾ W. Flex.
29	—44165	Resistor 5,000 Ohm ½ W. Carb.
30	—22196	Resistor 20,000 Ohm 1/3 W. Carb.
31	—36320	Resistor 120,000 Ohm ¼ W. Ins.
32	—21237A	Resistor 60,000 Ohm 1/3 W. Carb.
33A	—21875	Resistor, 100,000 Ohm 1/3 W. Carb.
33B	—21875	Resistor, 100,000 Ohm 1/3 W. Carb.
34	—34020	Resistor 250,000 Ohm 1/3 W. Carb.
35	—23785	Resistor 500,000 Ohm 1/3 W. Carb.
36	—37590	Resistor 750,000 Ohm 1/3 W. Carb.
37	—21454	Resistor 1. Megohm 1/3 W. Carb.
38	—26577	Resistor 3. Megohm 1/3 W. Carb.
39	—44008	Resistor 10,000 Ohm 2 W. Carb.
40	W —37631	Resistor 32 Ohm ½ W. Flex.
41	W —22873	Resistor 220 Ohm 2½ W. Flex.
42ABC	G172 —36400	Socket Type 6K6
43	G156 —36400	Socket Type 6A8
44AB	G171 —36400	Socket Type 6U7
45AB	G152 —36400	Socket Type 6C5
46	G9 —43900	Socket Type 6K5
47Z		Socket Type 6T5
47Y	W —44121	Resistor 1 Meg in Socket
48	G173 —36400	Socket Type 5Y3
49	G103 —28807	Socket Speaker
	W —40911	Tube Shield
	MG17—44099	Indic. Tube Bracket (Clamp Assy.)
	W —44137	Indic. Tube Mtg. Brkt.
	W —23880A	Thumb Screw
50	—571BP18"M"	Speaker Spec. No. 1-D-1128
	—44677	V. C. & Cone Assy.
	—44276	Field Coil
	—44678	Output Transformer
	—43678	Cone Mtg. Ring (Card board)
	W —43552	Spk. Plug Clamp
51	—44049A	Band Selector Switch
52Z		Tone Control (100,000 Ohm)
52Y	—44024B	Line Switch
53	—44674	Volume Control (1 Meg.)
54	G27 —26719	Ant. & Gnd. Term. Assy.
55	—44511	Power Trans. 110 V. 60 Cy.
	—44731	Power Trans. 110 V. 50 Cy.
	—44732	Power Trans. 220 V. 50 Cy.
	—44729	Power Trans. 110 V. 25 Cy.
	—44730	Power Trans. 220 V. 25 Cy.
56	— 4921C	Resistor 10,000 Ohm 1 W. Carb.
57	W —30805	Condenser .01 Mf. 400 V.
58	W —34712	Condenser .25 Mf. 160 V.
59	W —28621	Condenser .02 Mf. 200 V.
60	—35600	Resistor 100,000 Ohm ¼ W. Ins.
61	G164 —32004	Wave Trap
62	—44796	Switch (Local-Distance)
	G2 —44470	Toggle L.-D. Sw. (Female)
	G3 —44470	Toggle L.-D. Sw. (Male)
63	G1 —44416	Dynatrol Motor
	B —44317	Pulley
	W — 4012	Set Screw (Pulley)
	W —44382	Friction Spring (Shaft)
	W —43622	Felt Washer (Shaft)
	—44493	Shaft (Motor)
	W —44319	Belt Anchor (Hook)
	W —44701	Grommet (Anchor Hook)
	W —44976A	Guide Brkt. (Belt)
	W —24074	Stop Nut (Anchor Ret.)
	— 7578	Tubing 1¾" (Anchor Hook)
	W —44384A	Shock Pad
	W —45218	Vibrator Drive Unit (Right or Left)
64	G1 —44476	Motor Switch Assembly.
65	G37 —26719	Phono. Term. Board
66	—21875	Resistor 100,000 Ohm 1/3 W. Carb.
67	—34018	Resistor 200,000 Ohm 1/3 W. Carb.
	B —44207B	Escutcheon (Dial)
	W —44208C	Escutcheon (Tun. Indic. Tube)
	W —43553	Rubber Mtg. Foot
	—45067	Call Letter Sheet
	—44386B	Knob (2) (Vol. Cont. & Station Select.)
	—44387B	Knob (Motor Control)
	W —44381B	Knob (Line Sw. & Tone Con.)
	W —44432	Knob (Band Select. Sw.)
	W —45062	Knob (Local Distance Sw.)
	—7 S	Cabinet
	—44510	Grille Cloth (7S Cab.)
	W —44965A	Call Letter Clip
	W —44866	Call Letter Mag. Lens
	G13 —44363	D. L. Socket Assy.

SOCKET VOLTAGES

The tube socket voltages are measured from the tube socket contacts to the chassis with 1000 ohm per volt, 500 volt D. C. voltmeter (except filaments) with the receiver in operating condition and no signal input. The volume control should be turned full on, the tone control should be turned to the TREBLE position (counterclockwise) and the tuning condenser should be turned to the minimum capacity position. The filament voltages should be measured with an accurate low range A. C. voltmeter (approximately 0-10 volts). Readings may vary plus or minus 10% of values given.

MODEL 1137
Schematic
Socket

CROSLEY RADIO CORP.

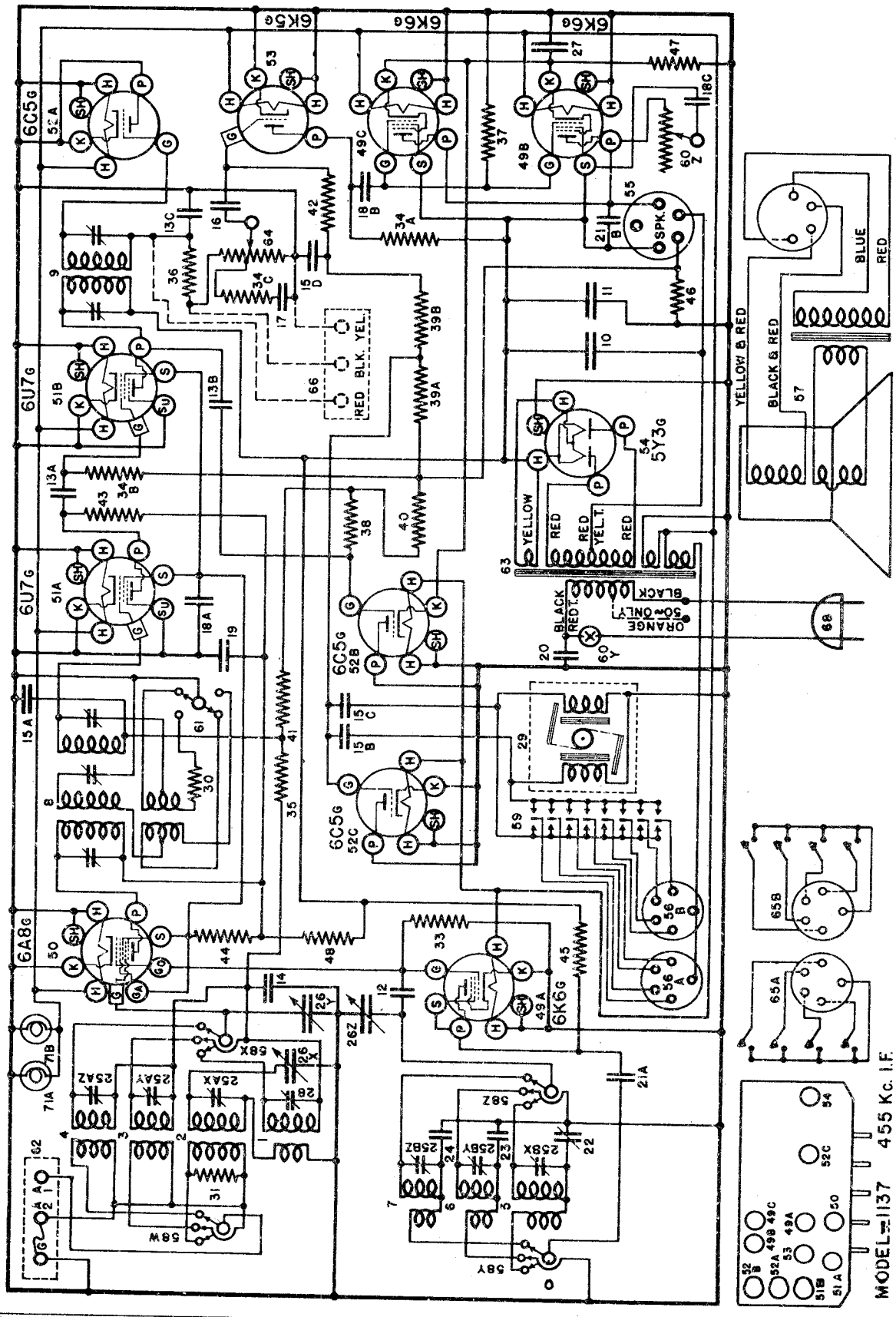

SEPTEMBER, 1937

©John F. Rider, Publisher

MODEL 1137
Socket, Trimmers
Layout, Voltage

CROSLEY RADIO CORP.

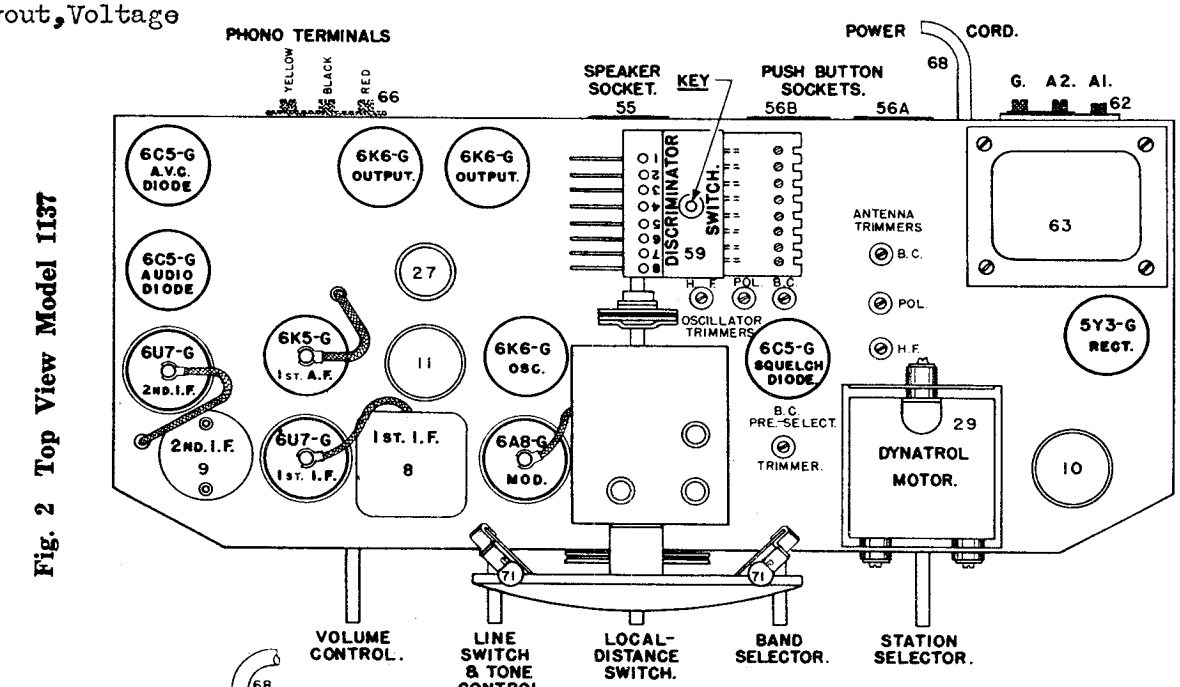

Fig. 2 Top View Model 1137

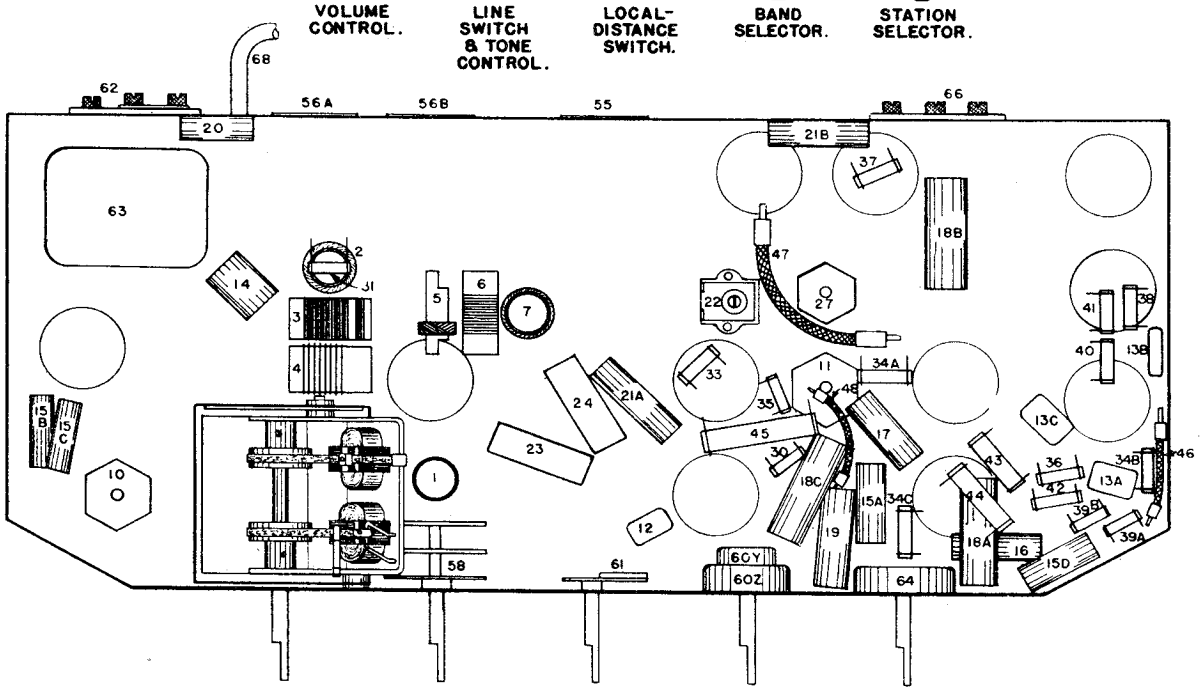

Fig. 3 Bottom View Model 1137

TUBE SOCKET VOLTAGE READINGS

Tube	Function	H	P	S	G	K	Go	Ga
6K6G	Oscillator	6.3	147	147	-36	0	—	—
6A8G	Modulator	6.3	224	110	—	0	36	110
6U7G	1st I-F Amplifier	6.3	174	110	—	0	—	—
6U7G	2nd I-F Amplifier	6.3	270	110	—	0	—	—
6C5G	Diode Detector	6.3	0	—	—	0	—	—
6C5G	AVC Diode	6.3	0	—	—	0	—	—
6K5G	1st A-F Amplifier	6.3	190	—	—	0	—	—
6K6G	Output	6.3	263	250	0	22	—	—
6K6G	Output	6.3	263	270	0	22	—	—
6C5G	"Squelch"	6.3	0	—	—	0	—	—
5Y3G	Rectifier	5.0	—	—	—	270	—	—

Power consumption approximately 90 watts at 117.5 volts.
Power output approximately 10 watts.
Voltage drop across speaker field 60 volts.

©John F. Rider, Publisher

MODEL 1137
Motor Assembly
Tuner, Phono.
Transformer Data

CROSLEY RADIO CORP.

This model Crosley radio is an 11-tube AC receiver designed for American and Foreign broadcast reception. It incorporates such features as push-button electric tuning, automatic volume control, Local-Distance switch and parallel pentode output. The tuning range is from 540 kilocycles to 22 megacycles and is divided into three bands as follows:

540-1850 Kilocycles or 555-162 Metres (American Broadcast Band)
1.9- 6.6 Megacycles or 158-45.5 Metres (Police & Amateur Band)
6.4- 22 Megacycles or 47-13.5 Metres (High Frequency or Foreign Band)

SPECIAL POWER TRANSFORMER ADJUSTMENT

In localities where the voltage variation on 50 or 60 cycle power supply lines is greater than customary commercial limits, special 50-60 cycle power transformers are available. These transformers have a "high" and "low" voltage tap on the under side of the chassis. The "high" voltage lead (BLACK) and the "low" voltage lead (ORANGE) are connected to a terminal strip near the transformer.

The voltage range of the "low" tap of the 95-130 volt transformer is from 95 to 112½ volts and of the "high" tap is from 112½ to 130 volts. The range of the "low" tap of the 190-260 volt transformer is from 190 to 225 volts and of the "high" tap is from 225 to 260 volts.

The accompanying illustration shows the connections for changing from high to low or low to high line voltage. Note the "jumper" wire which is attached to the terminal at which one side of the power cord is attached.

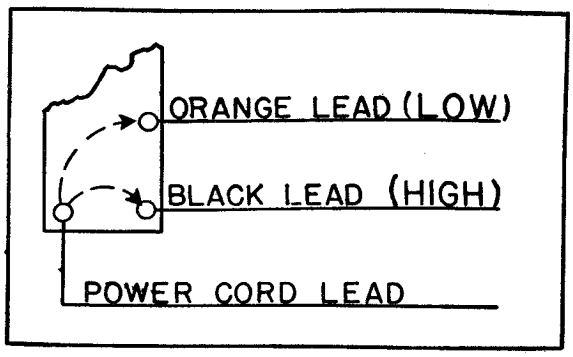

The other end of this jumper wire should be connected to the ORANGE or BLACK lead of the transformer primary, according to the line voltage the receiver is to be used on.

NOTE: Any change made in the power supply circuit of the receiver should be plainly stamped or otherwise permanently recorded on the rear of the chassis.

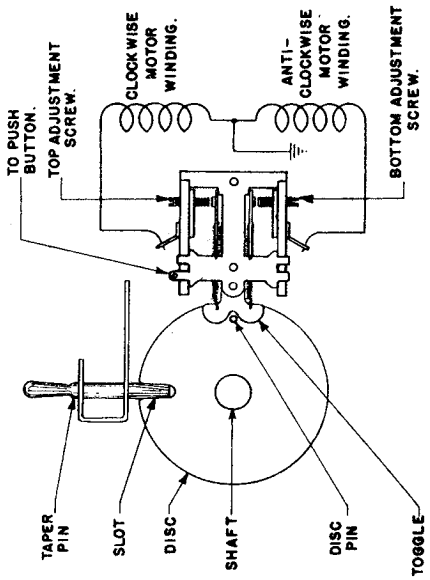

Fig. 6

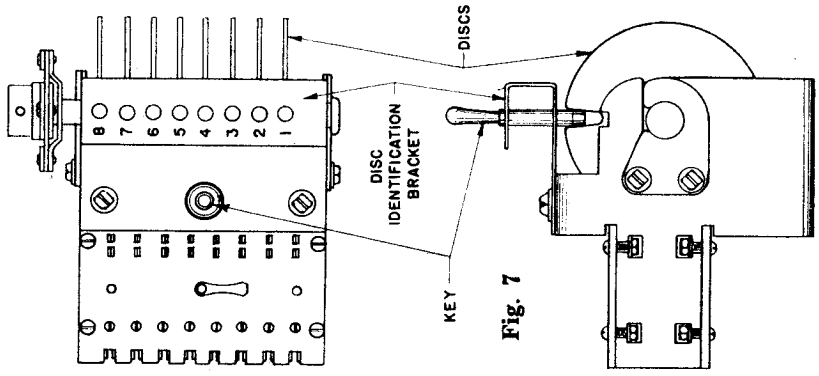

Fig. 7

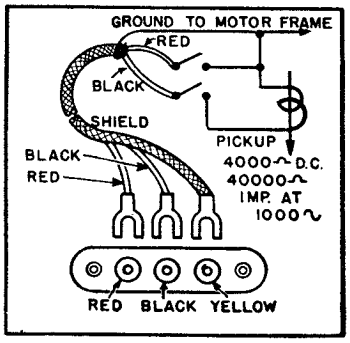

Fig. 4 Phonograph Pickup

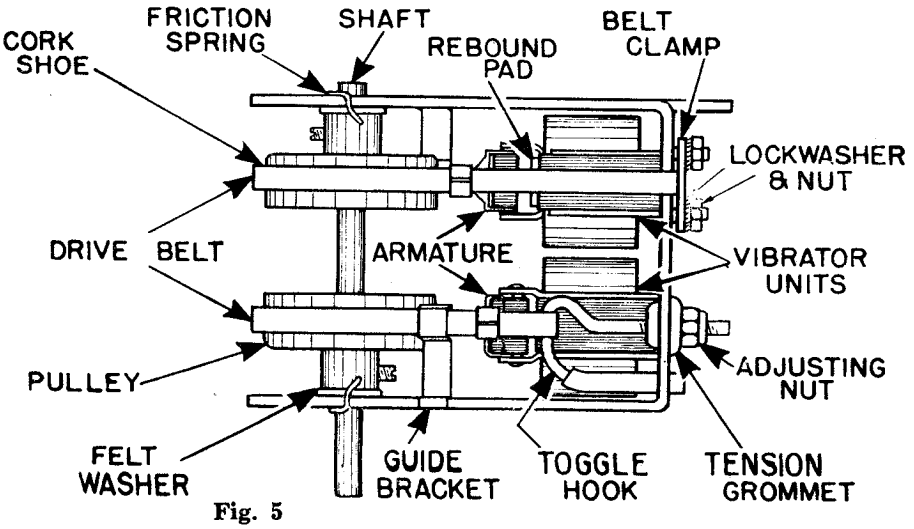

Fig. 5

©John F. Rider, Publisher

©John F. Rider, Publisher

ALIGNMENT PROCEDURE

Connecting Output Meter

Connect the output meter to the plates of the two 6K6G output tubes. Be certain that the meter is protected from D. C. by a condenser (.1 mfd. or larger—not electrolytic) in series with one of the leads.

Tuning The I-F Amplifier To 455 Kilocycles.

(a) Connect the output of the signal generator through a .02 mfd. condenser to the top cap of the 6U7G 1st I-F Amp. tube, leaving the tube's grid clip in place. Connect the ground lead from the signal generator to the ground terminal of the receiver. KEEP THE GENERATOR LEADS AS FAR AS POSSIBLE FROM THE GRID LEADS OF THE OTHER SCREEN GRID TUBES.

(b) Set the station selector so that the tuning condenser plates are completely out of mesh. Turn the volume control knob to the right (ON) and turn the tone control knob to the left (TREBLE).

(c) Set the band selector switch on the Broadcast Band.

(d) Turn the Local-Distance Switch to the "Distance" position.

(e) Set the signal generator to 455 kilocycles.

(f) Adjust both trimmer condensers located on top of the 2nd I-F transformer for maximum output. DO NOT ADJUST THE TRIMMER CONDENSERS LOCATED ON THE 2ND I-F TRANSFORMER WITH THE SIGNAL GENERATOR LEAD CONNECTED TO THE 6A8G TUBE.

(g) Transfer the signal generator lead to the top cap of the 6A8G tube, leaving the tube's grid clip in place.

(h) Close the middle trimmer of the 1st I-F transformer. (Do not force adjustment screw).

(i) Adjust the top and then the bottom trimmers of the 1st I-F transformer for maximum output.

(j) Adjust the middle trimmer of the 1st I-F transformer for maximum output.

ALWAYS USE THE LOWEST SIGNAL GENERATOR OUTPUT THAT WILL GIVE A REASONABLE OUTPUT METER READING.

Aligning The R-F Amplifier.

When aligning the R-F amplifier the output lead from the signal generator is connected to the "ANT" terminal of the receiver. For the Broadcast Band a 200 mmf. condenser should be connected in series with the output lead of the signal generator and for the High Frequency and Police Bands a 400 ohm carbon resistor should be used in place of the condenser.

Each band should first be SHUNT ALIGNED and then SERIES ALIGNED where provision is made for series alignment (Broadcast Band). The band selector switch should be set for the band being aligned and the signal generator should be set to the frequency indicated for each adjustment, ¶ (D) below.

(a) With the station selector adjusted so that the tuning condenser plates are completely out of mesh, adjust the "OSC" shunt trimmer until the MINIMUM CAPACITY SIGNAL (D) is heard (it is not necessary that the receiver tune through this signal).

(b) Adjust the station selector so that the SHUNT ALIGNMENT SIGNAL (D) is tuned-in with maximum output. Then adjust the "R-F" and "ANT" shunt trimmers for maximum ouput. Readjust the station selector slightly so that the generator signal is tuned-in with maximum output and check the adjustment of the "R-F" and "ANT" trimmers. DO NOT READJUST THE OSCILLATOR TRIMMER.

NOTE: When shunt aligning the Police and High Frequency Bands care must be exercised so that the circuits will be aligned on the correct frequency rather than on the image frequency which is approximately 910 kilocycles less than the fundamental. To check on this, increase the output of the signal generator ten times, or more, and try to tune-in the signal both at the generator frequency as indicated on the station selector dial and at approximately 910 kilocycles less than the correct frequpency. If the circuits have been properly aligned the signal can be tuned-in at both positions but much stronger at the correct frequency.

(c) To align the series trimmer (See Fig. 2), set the signal generator to the frequency indicated below (D) and then tune-in this signal with the station selector for maximum output. To obtain the best adjustment for the series trimmer, it will be necessary to rotate the station selector back and forth slightly while adjusting the trimmer for maximum output. Minor tolerance variations in series alignment at 2500 kilocycles in the Police Band and at 7000 kilocycles in the High Frequency Band may be compensated for by slight repositioning of the grid lead of the antenna coil in the Band affected.

(D) SIGNAL INPUT FREQUENCIES

	Min. Cap. Signal	Shunt Align.	Series Align.
American Broadcast Band	1850 Kilocycles	1700 Kilocycles	600 Kilocycles
Police & Amateur Band	6600 Kilocycles	6000 Kilocycles	
High Frequency Band	22 Megacycles	18 Megacycles	

PUSH BUTTON TUNING SYSTEM

The push button electric tuning system employed in this receiver incorporates eight push buttons, a selector switch and a dynatrol motor. The discriminator switch, item 59 — also Figs. 6 and 7, incorporates eight metallic discs, each of which operates in conjunction with a different push button to tune-in some favorite station. That is, the 1st push button on the left as you face the front of the cabinet works with No. 1 disc, and the 2nd push button works with No. 2 disc, etc.

SETTING PUSH BUTTONS

To set the electric tuning system, turn the receiver "ON" and hold No. 1 push button in the depressed position until the dial pointer stops. The key slot in No. 1 disc on the selector switch will now be in the "UP" position. Remove the key from its mounting and place it (knob up) through No. 1 hole in the disc identification bracket. If it does not drop into the slot in the disc, push it in with the fingers.

Turn the Local-Distance switch to the "Distance" position. By means of the station selector knob, tune-in AS ACCURATELY AS POSSIBLE, the station whose call letters have been placed in No. 1 push button. Then remove the key.

The electric tuning system is now correctly set for the 1st station. Follow through with this same procedure until the proper adjustments have been made for all eight of the favorite stations. When tuning the receiver by means of the push buttons, the Local-Distance switch should be turned to the "Local" position.

Dynatrol Motor

Should either vibrator unit of the Dynatrol motor need readjustment the following procedure should be carefully followed:

(a) Loosen the adjustment nut until the belt is loose on the pulley. The gap between the armature and "E" laminations should be approximately 3/16".

(b) With the motor running, tighten the adjustment nut until chatter stops. Care should be taken, however, not to tighten this adjustment too tight as an unstable condition will be reached wherein a slight change may result in a locked motor. On the other hand, the adjustment should not be so loose that the armature actually hits the rebound pad.

(c) Check the time required for the dial pointer to travel between two points on the dial. The adjustment nuts should be set so that approximately eight or nine seconds are required for the pointer to travel from one end of the dial to the other in either direction. If it is only convenient to check the speed of the pointer over a portion of the dial, the time required will be in direct proportion to the length of the dial scale traversed. That is, approximately 6 seconds will be required to travel two-thirds of the scale, etc.

Selector Switch

Should the selector switch become inoperative in the field, it should not be dissembled for repair, but should be returned to the factory via an authorized Crosley Distributor.

PARTS LIST—MODEL 1137

Figures in first column refer to parts in Diagrams.

Item	Part No.	Description
1	G97 —32001	Pre-Selector Coil B-C.
2	G138—32000	Ant. Coil B-C.
2	C151—32000	Ant. Coil Pol.
4	G150—32000	Ant. Coil H-F.
5	G139—32002	Osc. Coil B-C.
6	G154—32002	Osc. Coil Pol.
7	G153—32002	Osc. Coil H-F.
8	G161—32004	1st I-F 455 Kc.
9	G154—32004	3rd I-F 455 Kc.
10	W —44054	Condenser 30 Mf. 350 V.
11	W —36057B	Condenser 40 Mf. 300 V.
12	G1 —44886	Condenser Bimetal Temp. Control
13A	G2 —34002	Condenser .0001 Mf. Molded
13B	G2 —34002	Condenser .0001 Mf. Molded
13C	G2 —34002	Condenser .0001 Mf. Molded
14	W —35936	Condenser .05 Mf. 200 V.
15A	W —28621	Condenser .02 Mf. 200 V.
15B	W —28621	Condenser .02 Mf. 200 V.
15C	W —28621	Condenser .02 Mf. 200 V.
15D	W —28621	Condenser .02 Mf. 200 V.
16	W —41461	Condenser .0014 Mf. 200 V.
17	W —28619	Condenser .006 Mf. 200 V.
18A	W —22688	Condenser .1 Mf. 400 V.
18B	W —22688	Condenser .1 Mf. 400 V.
18C	W —22688	Condenser .1 Mf. 400 V.
19	W —23615	Condenser .05 Mf. 400 V.
20	W —30805	Condenser .01 Mf. 400 V.
21A	W —35139	Condenser .004 Mf. 400 V.
21B	W —35139	Condenser .004 Mf. 400 V.
22	—40769	Condenser B. C. Osc. Series Trimmer
23	G23 —34000	Condenser .001560 Mf. Pol. Osc. Fixed Trimmer
24	G20 —34000	Condenser .004910 Mf. H-F. Osc. Fixed Trimmer
25	W —35951A	3 Sec. Shunt Trimmer Assy.
26	G60 —33002	3 Sec. Var. Tuning Cond.
	—44891B	Dial Face (Glass)
	W —44146A	Mask (Polished Metal)
	C —44110C	Support Brkt. (Dial Glass)
	W —44262	Ring (Glass Support)
	W —44263	Arc (Glass Support)
	W —44127	Pointer
	W —40486	Screw—Pointer Mtg.
	G5 —43564	Pulley & Hub Assy.
	—41582	Drive Cord
	W —44813	Drive Belt
	W —44907A	Idler Pulley
	W —44908	Idler Mtg. Stud
27	W —41598	Condenser 50 Mf. 25 V.
28	—44518	Condenser Pre-Select. Shunt
29	G4 —44416	Vibrator Motor Assy. (50-60 Cy.)
	W —45218	Vibrator Drive Unit (Left or Right)
	W —44317A	Pulley (Vib. Motor)
	W —43622	Felt Washer (Shaft)
	W —44382	Friction Spring (Shaft)
	W —44319	Toggle Hook (Belt)
	— 7503	Tubing ⅞" (For Hook)
	W —44701C	Grommet (Tension)
	W —24074	Nut—Adjusting
	W —44384A	Rubber Pad (Rebound)
	W —44745	Clamp Plate (Belt)
30	—42401A	Resistor 99 Ohm ¼ W. Ins.
31	—22196	Resistor 20,000 Ohm 1/3 W. Carb.
32		
33	—21237A	Resistor 60,000 Ohm 1/3 W. Carb.
34A	—21875	Resistor 100,000 Ohm 1/3 W Carb.
34B	—21875	Resistor 100,000 Ohm 1/3 W. Carb.
34C	—21875	Resistor 100,000 Ohm 1/3 W. Carb.
35	—35690	Resistor 100,000 Ohm ¼ W. Ins.
36	—36320	Resistor 120,000 Ohm ¼ W. Ins.
37	—34018	Resistor 200,000 Ohm 1/3 W. Carb.
38	—34020	Resistor 250,000 Ohm 1/3 W. Carb.
39A	—23785	Resistor 500,000 Ohm 1/3 W. Carb.
39B	—23785	Resistor 500,000 Ohm 1/3 W. Carb.
40	—37590	Resistor 750,000 Ohm 1/3 W. Carb.
41	—21454	Resistor 1 Megohm 1/3 W. Carb.
42	—26577	Resistor 3 Megohm 1/3 W. Carb.
43	—44165	Resistor 5,000 Ohm ½ W. Carb.
44	— 4921	Resistor 10,000 Ohm 1 W. Carb.
45	—44008	Resistor 10,000 Ohm 2 W. Carb.
46	W —37631	Resistor 32 Ohm ½ W. Flex.
47	W —22873	Resistor 220 Ohm 2½ W. Flex.
48	W —23013	Resistor 2,000 Ohm 1¼ W. Flex.
49	G172—36400	Socket Type 6K6
50	G156—36400	Socket Type 6A8
51	G171—36400	Socket Type 6U7
52	G152—36400	Socket Type 6C5
53	G9 —43900	Socket Type 6K5
54	G173—36400	Socket Type 5Y3
55	G103—28807	Socket Speaker
56	G16 —28807	Socket Push Button Cable
W	—41007	Cable Clamp, P. B. Cable
57	—671BP18"M"	Speaker Spec. No. 1-D-1180
	—45184	V. C. & Cone Assem.
	—45185	Field Coil
	—44678	Output Transformer
	—43680	Cone Mtg. Ring
	—44049	Band Selector Switch
58		
59	G1 —44623	Switch Discriminator Assy. Complete
	G2 —44628	Flex. Coupling
60	—44024B	Tone Control (300,000 Ohm) & Line Switch
61	—44665A	Switch Local-Distance
62	G27 —26719	Ant. & Gnd. Terminal Assy.
63	—44910	Power Trans 110 V. 60 Cy.
	—44915	Power Trans. 110 V. 50 Cy.
	—44913	Power Trans. 110 V. 25 Cy.
	—44916	Power Trans. 220 V. 50 Cy.
	—44914	Power Trans. 220 V. 25 Cy.
64	—44702	Volume Cont. 1 Meg. Tapped
65A	W —44877A	Push Button—Cable & Plug Assy.
65B	W —44877A	Push Button—Cable & Plug Assy.
66	G37 —26719	Phono. Terminal Assy
67		
68	B —33906A	Line Cord & Plug
69		
70		
71	W —43567	Dial Light Bulb 6-8 V.
	G12 —44363	Dial L. Socket Assy.
	— TP	Cabinet
	W —43552	Clamp—Spk. Plug
	W —43553	Rubber Mtg. Foot
	W —44380B	Knob (2)
	W —44426A	Knob (3
	C —44883B	Escutcheon (Dial)
	G1 —45228	Push Button & Cable Assy.
	W —44871A	Push Button (Bakelite)
	B —44876A	Switch (Push Button) Only
	W —44875	Celluloid Cover (Button)
	—44902	Call Letter Sheet
	B —44873B	Escutcheon, Push Button
	W —40911	Tube Shield

CROSLEY RADIO CORP.

MODELS 175 Series(T1,C1)
190,193 Series(T2,T3)
195 Series(C4)
Schematic,Socket,Trimmers
Parts

DETROLA RADIO CORP.

Tubes required are:
1—6A7 Oscillator-translator
1—6D6 Intermediate Frequency Amplifier
1—75 Detector AVC—First Audio Amplifier
1—76 Driver—Phase Inverter ↖See Note
2—42 Power Output
1—80 Rectifier
1—6G5 Cathode Ray Tuning Tube (on models equipped with "eye" tuning indicator)

Frequency Ranges
B----540-1600KC
P---1650-5400KC
F--5400-16000KC

Adjustment & Operation of 175 Electric Automatic Tuning System SAME AS FOR MODEL 183

Unless specifically stated otherwise, these receivers are designed to operate on *115 volts 60 cycles alternating current only.*

Symbol	*Part No.*	*Description*
C1	4354	12-375 mmf Variable
C3,11	1611	3-35 mmf trimmer
C4,5,7,9	2597	1-10 mmf trimmer
C6,22	572	.1-200v
C8	2793	.006 padder
C10	2741	1330 padder
C12	2560	200-400 mmf padder
C13	575	.1-400v
C14	2780	50 mmf mica
C15,17		IF trimmers
C16	2792	.2-200v
C18,20	1286	250 mmf mica
C19	580	.05-200v
C21	565	.01-200v
C23,25	576	.02-400v
C24	581	.005-600v
C26	824	.002-600v
C27	3375	16 mf 450v
C28	3351	8 mf 225 V. reg.
C29	3358	.2-400v
R1,2	2689	100 ohm 1/3w
R3,7,17	631	50M 1/3w
R4	636	40M 1/3w
R5	617	20M 1/3w
R6,9,10,11	624	1 meg. 1/3w
R8	2726	500M VC
R12	2737	2 meg TC
R13	2730	200M 10% 1/3w
R14	2881	400M 10% 1/3w
R15	2880	100M 10% 1/3w
R16	2883	5M 10% 1/3w
R18	2731	500 M 10% 1/3w
R19	3353	250 ohm 2 W.
R20	2882	15 ohm 10% 1/3w

NOTE-
190,193,195-Selector Light--R21=20w 1watt
10-Button Tuning System similar to Series 192.
193-uses 6Q7G in place of 75, Noise-Silencer using a 76.
R9 & R10 are 500M 1/3watt

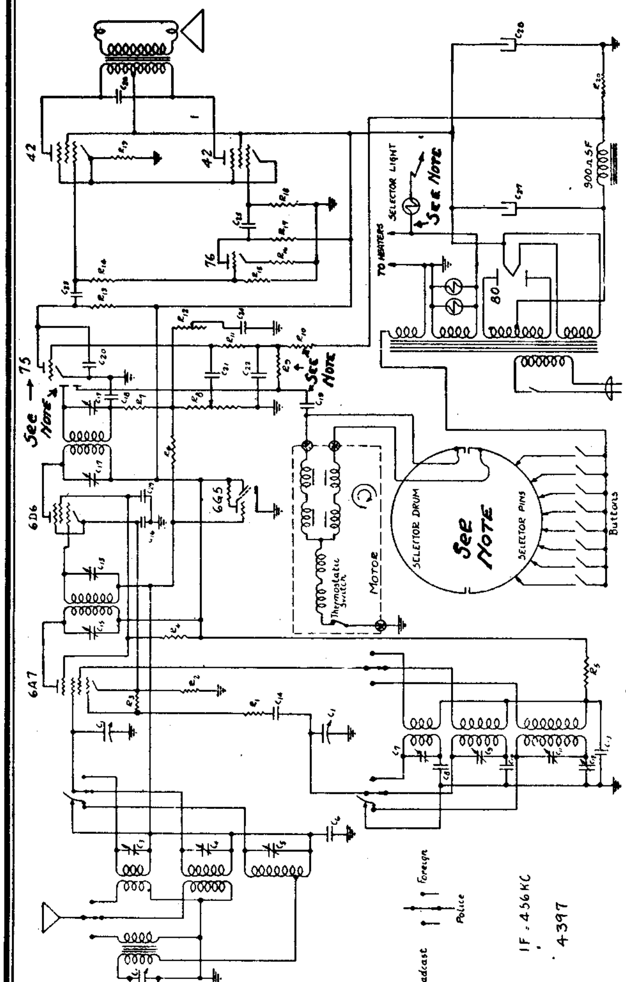

Do not use tubes of types different from those shown above.

ALIGNMENT PROCEDURE SAME AS 183 Series

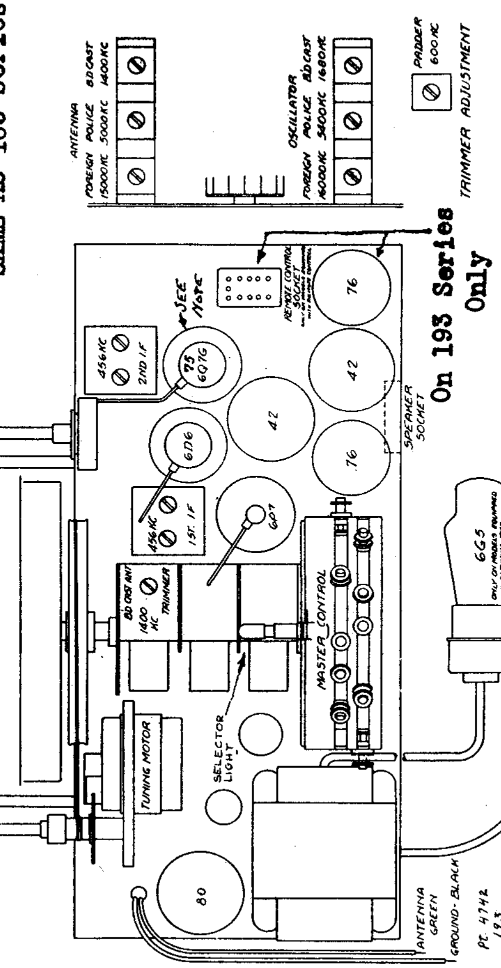

On 193 Series Only

©John F. Rider, Publisher

MODEL 176
Schematic, Socket
MODEL 207 Converter
Schematic, Socket

DETROLA RADIO CORP.

MODEL 204
Alignment

Factory 204 Series

ALINEMENT PROCEDURE

Connect a high impedence AC voltmeter across the loud-speaker terminals. Volume control should be set a few degrees back of maximum position. Use a weak signal from the generator—strong signals tend to cause improper adjustments.

I.F. Connect the generator ground to receiver chassis. Using .1 mfd. condenser in series with high side of the generator, apply 658 m. (456 k.c.) signal to the grid of the 6D6 I.F. amplifier tube and align second I.F. transformer trimmers. Repeat for the first I.F. transformer trimmers, applying signal to grid of the 6A7 tube. (See above diagram for location of tubes and transformers.)

R.F. (See circuit diagram for location of trimmers.) Using a 200 mmf. condenser in series with the high side of the generator, turn band switch all the way to left, tuning condenser to minimum capacity, feed 750 m. (400 k.c.) signal to antenna terminal and adjust long wave oscillator trimmer for top frequency. Set generator frequency at some point around 800 m. (375 k.c.), and adjust long wave antenna and R.F. trimmers. Set generator for 1800 m. (167 k.c.), tune receiver to signal and adjust the padder. The tuning condenser should be rocked back and forth through the signal while varying the padder in order to assure perfect alignment.

With band switch in center position repeat the above using 174.5 m. (1720 k.c.) signal to adjust medium wave oscillator trimmer, 214 m. (1400 k.c.) to adjust the antenna and R.F. trimmers, and 500 m. (600 k.c.) to adjust the medium wave padder.

A 400 ohm resistor must be used in series with the generator as a "dummy" antenna for proper alignment of the short wave band. Set the band selector switch in the right band position, adjust the oscillator top frequency for 16.6 m. (18.1 m.c.) then align the antenna trimmer for about 20 m. (15 m.c.). In order to make sure that the top end of this band is set properly, it is best to screw the oscillator trimmer down tight, then unscrew to the second peak. The antenna trimmer should be screwed down tight, then unscrew to the first peak. This procedure must be followed in order that the oscillator and antenna circuits will be set in the correct relation to each other, otherwise a "dead" spot at a lower frequency will result, and the dial calibration will not be correct. Usually, it is best to rock the tuning condenser back and forth slightly while making these adjustments at high frequencies.

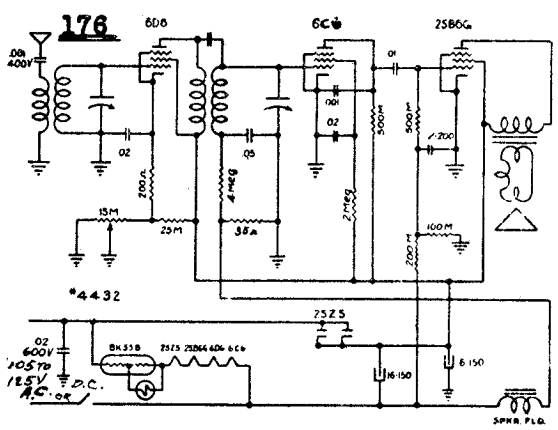

This receiver covers a continuous range from 540 to 1725 KC. Standard and experimental broadcast stations will be received between 540 and 1600 KC. Many police stations can be received near 1700 KC.

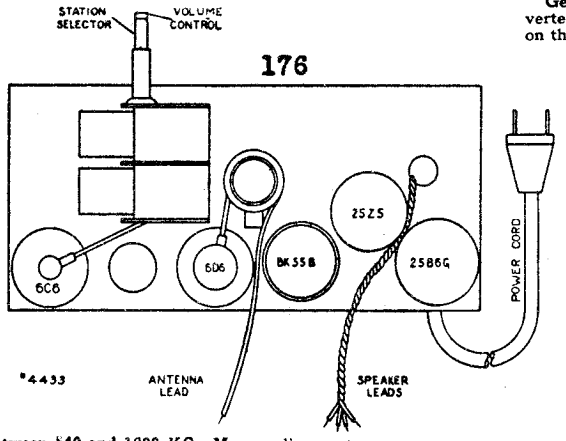

Remove antenna lead-in from regular receiver and connect to green lead on converter. Connect the twisted leads to receiver—blue to antenna lead of receiver and black to ground of set or chassis frame. *Do Not Ground Converter Directly.* Turn the lower knob on converter to right, this turns on converter and switches antenna to converter.

This converter is designed to work in conjunction with any Superhetrodyne or Tuned Radio Frequency receiver that will receive stations in the range of 550 to 700 kc. When connected to such a receiver, reception of stations operating on frequencies between 25 and 63 m.c. (12-4.76 meters) will be possible.

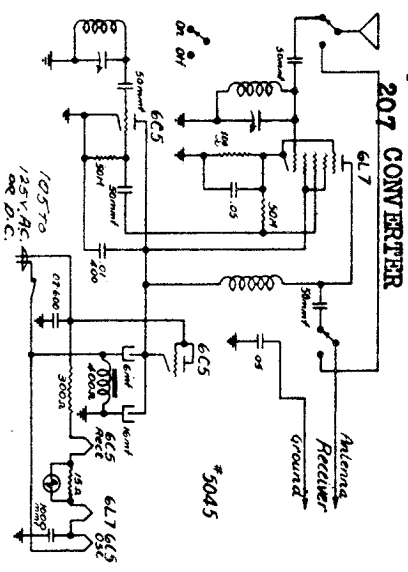

Tune the broadcast receiver to a point between 550 and 700 kc. where there is no broadcast station. Turning the converter tuning knob very slowly, tune in the station desired as close as possible; the broadcast receiver tuning knob may be used for final adjustment. Normally the station will drift off tune while converter is heating, but will remain stable after a few minutes.

If a hum is heard as station is tuned in, reverse converter power plug.

Generally speaking, better results will be obtained if the converter unit is placed on a stand near the receiver rather than directly on the receiver cabinet.

1—6C5 Oscillator
1—6L7 Translator
1—6C5 Rectifier

207 CONVERTER

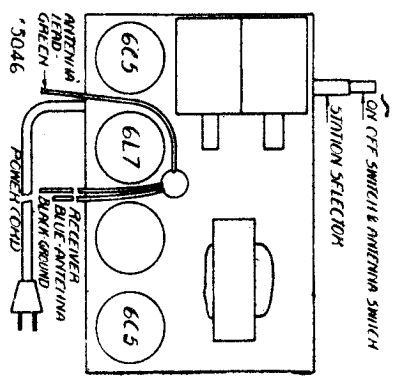

©John F. Rider, Publisher

DETROLA RADIO CORP.

MODEL 178
MODEL 197, Peewee
Schematics, Socket
MODEL 184 Series
Schematic
Alignment

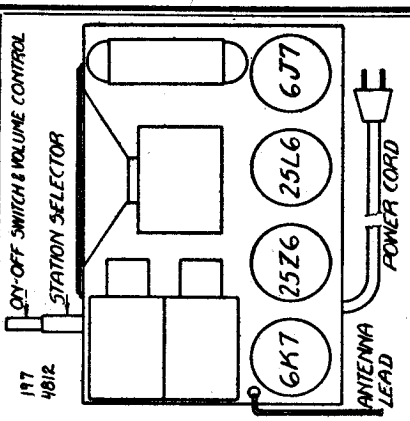

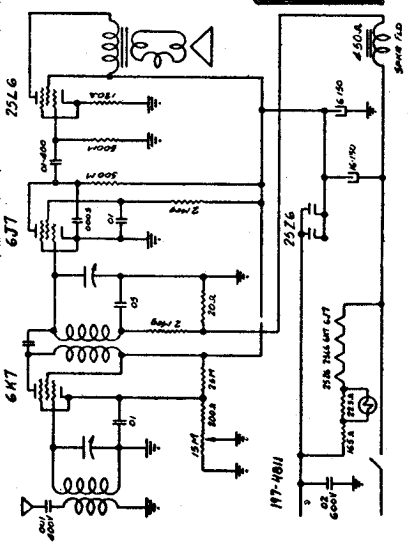

MODEL 197 "PEEWEE"

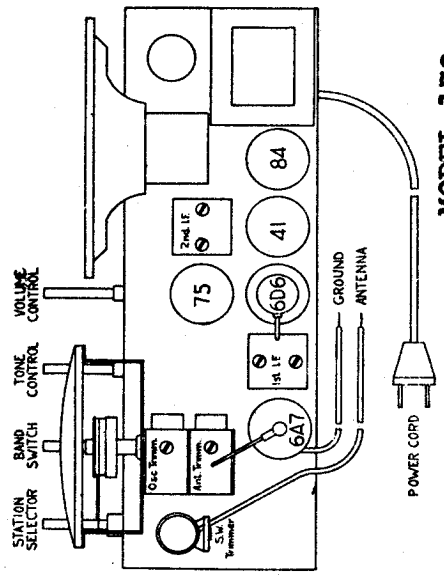

MODEL 178

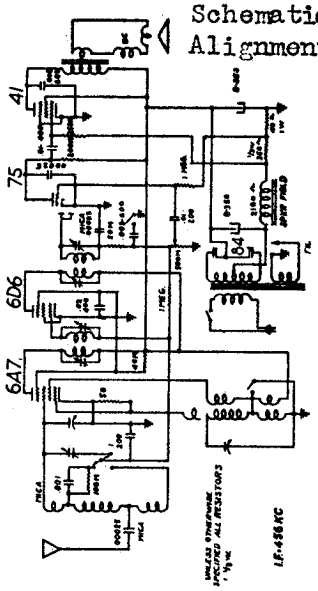

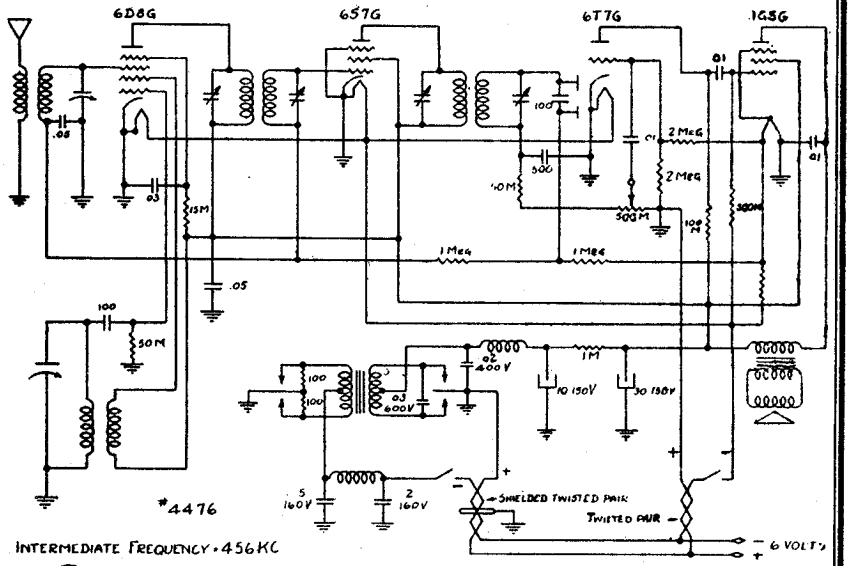

ALINEMENT PROCEDURE

Connect a high impedance AC voltmeter across loud-speaker terminals. Volume control should be set a few degrees back of maximum volume position. Use a weak signal from generator, strong signals tend to cause improper adjustments.

IF. Connect generator ground to receiver ground. Using .1 mfd condenser in series with "high" side of generator, apply 456 kc signal to grid of 6S7G and adjust second IF transformer; same for first IF, applying signal to grid of 6D8G. (See diagram for location of tubes and transformers.)

RF. Using 200 mmf condenser in series with generator, feed 1725 kc signal to antenna lead and adjust oscillator top frequency. Set generator at 1400 kc, tune receiver to signal and adjust antenna trimmer.

MODEL 184 Series

Range 540KC-1725KC

Tubes: Tubes required are:
1—6D8G Oscillator-Translator.
1—6S7G Intermediate frequency amplifier.
1—6T7G Detector—automatic volume control—first audio amplifier.
1—1G5G Power output.
Do not use tubes of types different from those shown above.

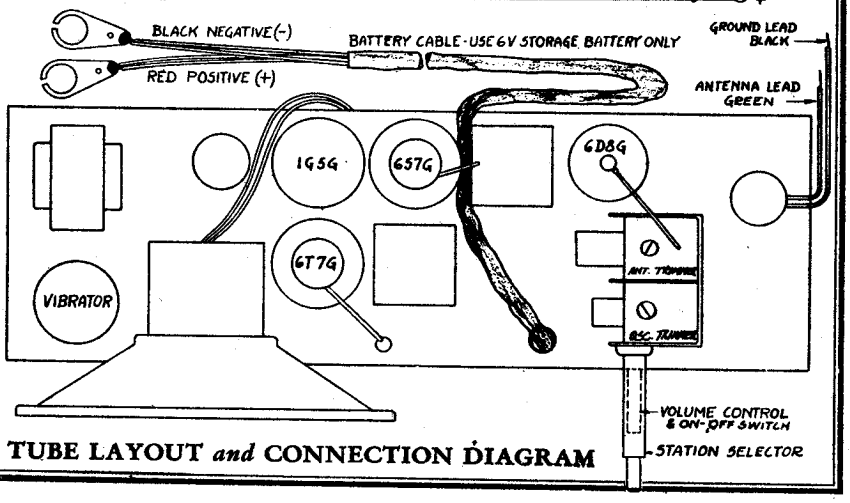

TUBE LAYOUT *and* CONNECTION DIAGRAM

©John F. Rider, Publisher

MODELS 183 Series,
191 Series(C5)
Schematic, Socket
Trimmers, Alignment
Parts

DETROLA RADIO CORP.

ALIGNMENT OF SHORT-WAVE BANDS ON NEXT PAGE

Symbol	Part No.	Description			
C1,2,3	4354	Variable Condenser	R5	4530	30 M 1 W
C4,9	1611	3-35 MMF trimmer	R7,11,13	624	1 Meg 1/3 W
C5,6,7,8	2597	1-10 MMF trimmer	R9		500 M volume control
C10	2780	50 MMF mica	R10		2 Meg tone control
C11	2793	.006-600 V 5%	R12,22	2731	500 M 1/3 W 10%
C12	2741	1330 MMF mica 5%	R14,18,19,20,21	2730	200 M 1/3 W 10%
C13	2560	200-400 MMF padder	R15	2599	1 Meg 1/3 W 10%
C14	576	.02-400 V	R16	2568	300 M 1/3 W 10%
C15		IF trimmers	R17	4529	10 M 1/3 W 10%
C16,25	2792	.2-200 V	R23	3580	10 ohm 1/2 W 10%
C17	4528	4 MF—150 V	R24	4535	20 ohm 1 W 10%
C18,32	1286	250 MMF mica	Do not use tubes of types different from those shown above.		
C19	576	.02-400 V			
C20	572	.1-200 V			
C21	581	.005-600 V			
C22,24	2600	.02-600 V			
C23	563	.05-400 V			
C26,27	2601	.01-600 V			
C28	3135	.003-800 V			
C29	3375	16 MF—450 V			
C30	4062	30 MF—275 V			
C31	580	.05-200 V			
R1,6,8	631	50 M 1/3 W			
R2,3	2689	100 ohm 1/3 W 10%			

ALINEMENT PROCEDURE

IF. Connect the generator ground to receiver chassis. Using .1 mfd. condenser in series with high side of the generator, apply 456 kc. signal to the grid of the 6D6 IF amplifier tube and aline second IF transformer trimmers. Repeat for first IF transformer, applying signal to grid of the 6A7 tube. (See above diagram for location of tubes and transformers.)

RF. (See circuit diagram for location of trimmers.) Using a 200 mmf. condenser in series with the high side of the generator, turn band selector switch all the way to the left, tuning condenser to minimum capacity, feed 1680 kc. signal to antenna terminal and adjust broadcast oscillator trimmer for top frequency. Set generator frequency at some point around 1400-1500 kc., and adjust broadcast antenna and RF trimmers. Set generator for 600 kc., tune receiver to signal and adjust the padder. The tuning condenser should be rocked back and forth through the signal while varying the padder in order to assure perfect alinement.

Unless specifically stated otherwise, these receivers are designed to operate on *115 volts 60 cycles alternating current only.*

©John F. Rider, Publisher

DETROLA RADIO CORP.

MODELS 183 Series,
191 Series(C5)
Tuner Data,S-W Alignment

191 Series has 10-Button tuning System similar to 192 Series

ALIGNMENT OF SHORT-WAVE BANDS

A 400 ohm resistor must be used in series with the generator as a "dummy" antenna for proper alinement of the two short wave bands. Set the band selector switch in the center position, adjust the oscillator top frequency for 5400 kc., then aline the antenna trimmer at about 5000 kc. With the band selector in the extreme right position, adjust the top frequency of the high frequency band to 16,000 kc., and aline the antenna trimmer at about 15,000 kc. In order to make sure that the top end of the last band is set properly, it is best to screw the oscillator trimmed down tight, then unscrew to the second peak. The antenna trimmer should be screwed down tight, then unscrewed to the first peak. This procedure must be followed in order that the oscillator and RF circuits will be set in the correct relation to each other, otherwise a "dead" spot at a lower frequency will result, and the dial calibration will not be correct. Usually, it is best to rock the tuning condenser back and forth slightly while making these adjustments at high frequencies.

Tubes required are:
1—6A7 Oscillator-translator
1—6D6 Intermediate Frequency Amplifier
1—6Q7G Detector AVC—First Audio Amplifier
1—76 Driver—Phase Inverter
1—76 Silencer
4—42 Power Output
1—80 Rectifier
1—6G5 Cathode Ray Tuning Tube (on models equipped with "eye" tuning indicator)

INSTRUCTIONS FOR ADJUSTMENT AND OPERATION OF THE SERIES 183 ELECTRIC AUTOMATIC TUNING SYSTEM

Before attempting to adjust the automatic tuner, read the following instructions carefully and proceed exactly as directed. Setting up the *Master Selector* requires no tools, and is very easily accomplished when the proper procedure is followed.

The tuning unit consists essentially of three parts, which may be described briefly as follows:

Master Selector. This includes the *Selector Drum*, the *Selector Pins*, and the *Selector Light*. These parts are mounted on the rear of the variable condenser, together with their associated brackets and wiring.

Motor and Drive. This assembly consists of an induction motor having a mechanical drive clutch with magnetic throw-out, and a train of gears operating directly onto the *Manual Station Selector* drive shaft. No oiling is necessary.

Push Button Assembly. These buttons are located on the front of the chassis, and extend through the escutcheon below the dial. Stations are tuned in automatically when the button under the call letters of the desired station is depressed and held down until the motor stops and the station is heard. When the button is pushed down, an automatic silencer mutes the receiver until the desired station is exactly on tune.

SETTING UP THE MASTER SELECTOR

As a means of simplifying these operations, list eight of your favorite *local* or strong near-by stations according to frequency or position on the dial. Setting up weak or distant stations is not recommended. Call the station nearest the left-hand end of the dial (nearest 1600 kc) the *No. 1* station, and number the other stations similarly going from left to right across the dial. For example, assume that you favorite stations operate on frequencies of 1500 kc, 1400 kc, 1300 ks, 1200 kc, 1000 kc, 900 kc, 700 kc, and 600 kc. Then the 1500 kc station would be *No. 1*, the 1400 kc station would be *No. 2*, and so on down the list with the 600 kc station being designated *No. 8*. Reference to the push buttons is not necessary since they are not used until *After the Master Selector* has been set up.

On the back of the receiver will be found the *Selector Drum* and the eight *Contact Pins* which determine the points at which the tuner will stop when the buttons are pressed. Referring to the diagrams, *Fig. 1* shows the general layout and relation of the drum and contacts. *Fig. 2* shows one of the contact pins in detail: note that while the position of the contact may be varied at will by sliding it along the slot in the bracket, it is held securely by a strong spring which will not allow it to move when the selector drum turns under it. *Fig. 3* shows the arrangement of the *Contact Pins*, each pin being numbered according to the system suggested for numbering the stations, thus *pin No. 1* will be used for *Station No. 1*, *pin No. 2* will be used for *Station No. 2*, and so on down the list.

On the *Selector Drum* are two pairs of *Contact Ribbons*. Note that there is a *Paint Dot* on the edge of the drum directly opposite the break in the ribbons on the upper half of the drum. This *Paint Dot* is for the purpose of locating the approximate position at which a given *Contact Pin* should be set in order to have the *Drum* stop for a particular station.

It is very important that the following steps be followed exactly as outlined; any deviation may necessitate re-setting some of the stations:

1. Set the receiver for reception of *Standard Broadcast Stations*, as outlined previously under *"Operation."* Turn the receiver "On," let it run for *at Least Ten Minutes* to allow the tubes to reach their final operating temperature.

2. Using the *Manual Station Selector* (upper right) knob, tune in the No. 1 station, that is, the one nearest the 1600 kc end of the dial. Watch the tuning eye closely, making certain that the station is tuned in perfectly.

3. Face the rear of the chassis. Attach the lead from the *Selector Light* to the *No. 1 Contact Pin*; unless the pin happens to be set exactly, the lamp will glow when the lead is touched to the pin.

4. Observe the position of the *Paint Dot* on the edge of the *Drum*. Grasp the No. 1 pin firmly and slide it toward the *Paint Dot*, being careful not to break the connection between the *Selector Light* lead and the pin. When the pin is directly opposite the *Paint Dot*, the light will go out, indicating that the contact is properly set. To insure greatest accuracy in making this setting, slide the pin back and forth across the break between the ribbons, leaving it set half way between the points where the lamp lights. *Be very careful not to move the Selector Drum while the pin is being set.* When the pin is definitely in its proper position, *Disconnect the Selector Light Lead from the Pin.*

5. Repeat the above procedure for the *No. 2* station; tune in the station, connect the *Selector Light* lead to the *No. 2* contact pin, move this pin opposite the *Paint Dot* so that the light goes out, then *Disconnect the Selector Light Lead.*

6. Using similar procedure, set up the other six stations, in each case using the *Contact Pin* bearing the *same number as that assigned to the station being set up.* Always *Disconnect the Selector Light Lead* as soon as a station has been set up; failure to do so will cause the receiver to hum, and may result in the lamp being burned out.

7. After all the stations have been set up, locate the *Call Letters* of your stations on the printed sheets supplied with the receiver. Remove the desired call letter blocks from the sheets, and insert them in the proper pockets above the push-buttons.

8. The only operations necessary to receive any of the eight stations set up as outlined above are: Turn the power switch on by rotating the lower left knob to the right—*turn the control a few degrees beyond the point at which the switch snaps on* — allow about one minute for the tubes to heat, press the button under the call letters of the desired station *Holding the Button Down Until the Pointer Stops Moving and the Station is Heard*, then adjust the tone and volume. Be sure that the *Band Selector* switch is in the proper position for reception of *Standard Broadcast Stations.*

OPERATING SUGGESTIONS

Be sure that your stations are listed in the proper order according to frequency or position on the dial. Do not confuse frequency (kilocycles) with wave length (meters).

Be sure that your stations are tuned in exactly before setting the contact pins.

Do not set up weak stations, or distant stations too weak to afford clear reception at all times.

Do not press more than one button at a time. Holding down more than one button will cause inaccurate tuning, or the motor may not turn at all.

Do not leave the Selector Light Lead connected after the pins are set up.

Do not run the motor for excessively long periods of time. While no damage will result, a protective cut-out will shut off the power to the motor after four to five minutes of *continuous* operation, and the automatic tuner will not function again until the motor has been allowed to cool for several minutes.

When tuning stations, *do not release the button until the pointer stops moving.*

Do not attempt to set adjacent pins in the same slot too close together.

Do not expect good results unless a good outdoor antenna is used.

Do not change the relative positions of the contact pins; keep them in the same order as shown on the diagram (Figure 3).

©John F. Rider, Publisher

MODEL 192 Series(C3)
Schematic, Socket
Trimmers, Parts

DETROLA RADIO CORP.

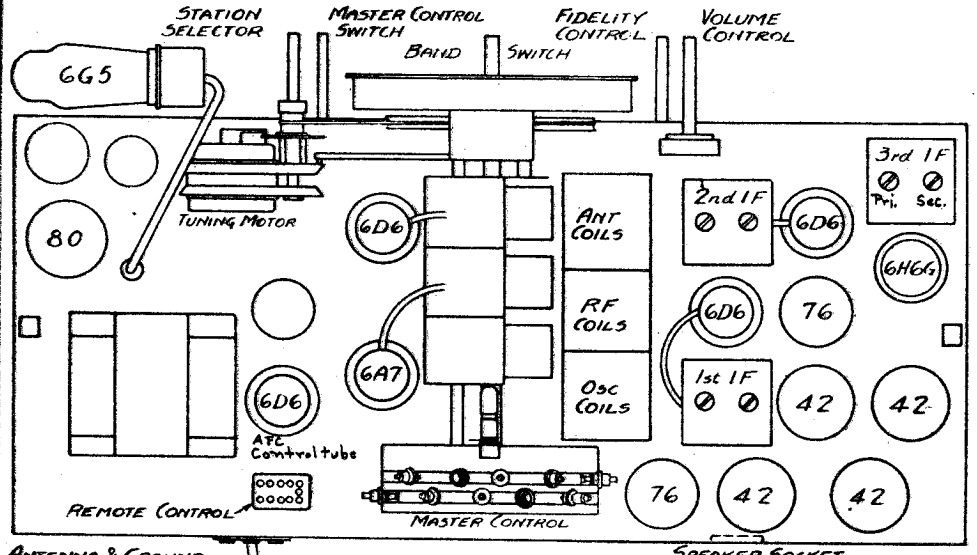

Part No 4728

DOUBLET ANTENNA CONNECTS TO "D" & "A". SINGLE-WIRE ANTENNA TO "A", LINK "D" TO "G". GROUND-WIRE TO "G".

Frequency Ranges
B-----540-1800KC
P----1800-6250KC
F---6250-18100KC

Power Supply: Unless specifically stated otherwise, these receivers are designed to operate on 115 VOLTS 60 CYCLES ALTERNATING CURRENT ONLY.

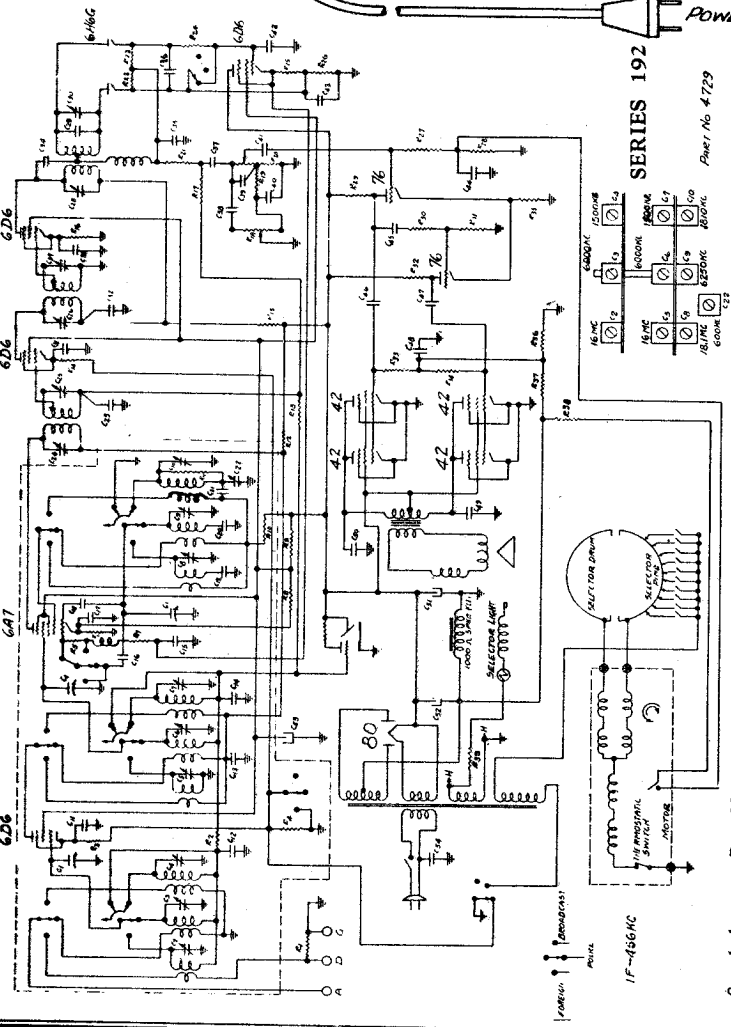

Symbol	Part No.	Description			
R1,13,29,32	2880	100 M 1/3W 10%	C2,3,4	3822	2-35 mmf triple trimmer
R2,7,21	631	50 M 1/3W	C5,6,7	3822	2-35 mmf triple trimmer
R3,12,14,15,16	2421	1000 ohm 1/3W	C8,9,10	3822	2-35 mmf triple trimmer
R4	2421	1000 ohm 1/3W	C11,12,14,17,		
R5	2783	2500 ohm 1/3W 10%	31,33	580	.05—200 V
R6	3937	500 ohm ½ W Wire-wound ±10%	C13,32	575	.1—400 V
			C15,23,42,43,44	572	.1—200 V
R8	3805	7000 ohm 3½ W Wirewound	C16	2925	25 mmf mica
			C18	4676	8 mmf
R9	3805	8000 ohm 1½ W Wirewound	C19	2694	.005—600 5%
			C20	2741	1330 mmf 5%
R10	600	10M 1/3W	C21		.01—400 V
R11	3581	3M 1/3W ±10%	C22	2560	350 mmf variable padder
R17,22,23,24, 28,27,30	2599	1 meg 1/3W 10%	C34,35	1285	100 mmf mica
R18	2737	2 meg tone control	C36,48	2792	.2—200 V
R20	3800	3 meg volume control	C37,41	576	.02—400 V
R25	2572	400 ohm 1/3W 10%	C38,40	824	.002—600 V
R26	2691	500 ohm 1/3W 10%	C39	2780	50 mmf mica
R33,34,19	2730	200 M 1/3W 10%	C45,46,47	2600	.02—600 V
R36		150 M 1/3W 10%	C49,50	2601	.01—600 V
R38,37	2731	500 M 1/3W 10%	C51	4062	30 MF 275 V
R39		20 ohm 1 W	C52	4649	24 MF 450 V
C1		400 mmf variable	C53	3079	8 MF 150 V
			C54	3135	.003—800 V

©John F. Rider, Publisher

DETROLA RADIO CORP.

MODEL 192 Series(C3)
Tuner Data, Alignment

INSTRUCTIONS FOR ADJUSTMENT AND OPERATION OF THE SERIES 192 ELECTRIC AUTOMATIC TUNING SYSTEM

Before attempting to adjust the automatic tuner, read the following instructions carefully and proceed exactly as directed. Setting up the *Master Selector* requires no tools, and is very easily accomplished when the proper procedure is followed.

The tuning unit consists essentially of three parts, which may be described briefly as follows:

Master Selector: This includes the *Selector Drum*, the *Selector Pins*, and the *Selector Light*. These parts are mounted on the rear of the variable condenser, together with their associated brackets and wiring.

Motor and Drive: This assembly consists of an induction motor having a mechanical drive clutch with magnetic throw-out, and a train of gears operating directly onto the *Manual Station Selector* drive shaft. No oiling is necessary.

Push Button Assembly: These buttons are located on the front of the chassis, and extend through the escutcheon above the dial. Stations are tuned in automatically when the button with the call letters of the desired station is depressed and held down until the motor stops and the station is heard. When the button is pushed down, an automatic silencer mutes the receiver until the desired station is exactly on tune.

SETTING UP THE MASTER SELECTOR

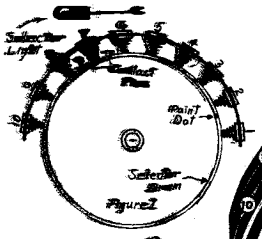

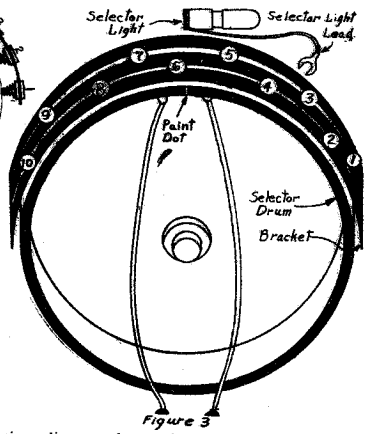

As a means of simplifying these operations, list ten of your favorite local or strong near-by stations according to frequency or position on the dial. Setting up weak or distant stations is not recommended. Call the station nearest the left-hand end of the dial (nearest 600 kc) the No. 1 station, and number the other stations similarly going from left to right across the dial. For example, assume that your favorite stations operate on frequencies of 600 kc, 700 kc, 800 kc, 900 kc, 1000 kc, 1100 kc, 1200 kc, 1300 kc, 1400 kc, and 1500 kc. Then the 600 kc station would be No. 1, the 700 kc station would be No. 2, and so on down the list with the 1500 kc station being designated No. 10. Reference to the push buttons is not necessary since they are not used until after the Master Selector has been set up.

On the back of the receiver will be found the *Selector Drum* and the ten *Contact Pins* which determine the points at which the tuner will stop when the buttons are pressed. Referring to the diagrams, *Fig. 1* shows the general layout and relation of the drum and contacts. *Fig. 2* shows one of the contact pins in detail: note that while the position of the contact may be varied at will by sliding it along the slot in the bracket, it is held securely by a strong spring which will not allow it to move when the selector drum turns under it. *Fig. 3* shows the arrangement of the *Contact Pins*, each pin being numbered according to the system suggested for numbering the station, thus *pin No. 1* will be used for *Station No. 1*, *pin No. 2* will be used for *Station No. 2*, and so on down the list.

On the *Selector Drum* are two pairs of *Contact Ribbons*. Note that there is a *Paint Dot* on the edge of the drum directly opposite the break in the ribbons on the upper half of the drum. This *Paint Dot* is for the purpose of locating the approximate position at which a given *Contact Pin* should be set in order to have the *Drum* stop for a particular station.

It is very important that the following steps be followed exactly as outlined; any deviation may necessitate re-setting some of the stations:

1. Set the receiver for reception of Standard Broadcast Stations as outlined previously under "Operation." Turn the Master Control Switch to the extreme right-hand position and wait about ten minutes to allow the tubes to reach their final operating temperature.

2. Using the Manual Station Selector (upper right) knob, tune in the No. 1 station, that is, the one nearest the 600 kc end of the dial. Watch the tuning eye closely, making certain that the station is tuned in perfectly.

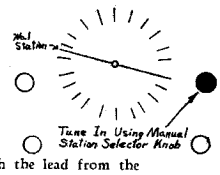

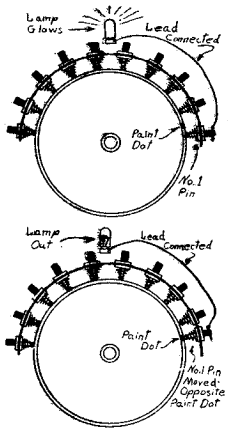

3. Face the rear of the chassis. Attach the lead from the *Selector Light* to the *No. 1 Contact Pin*; unless the pin happens to be set exactly, the lamp will glow when the lead is touched to the pin.

4. Observe the position of the *Paint Dot* on the edge of the *Drum*. Grasp the No. 1 pin firmly and slide it toward the *Paint Dot*, being careful not to break the connection between the *Selector Light* lead and the pin. When the pin is directly opposite the *Paint Dot*, the light will go out, indicating that the contact is properly set. To insure greatest accuracy in making the setting, slide the pin back and forth across the break between the ribbons, leaving it set half way between the points where the lamp lights. ***Be very careful not to move the Selector Drum while the pin is being set.*** When the pin is definitely in its proper position, ***Disconnect the Selector Light Lead from the Pin.***

5. Repeat the above procedure for the *No. 2* station: tune in the station, connect the *Selector Light* lead to the *No. 2* contact pin, move this pin opposite the *Paint Dot* so that the light goes out, then ***Disconnect the Selector Light Lead.***

6. Using similar procedure, set up the other eight stations, in each case using the *Contact Pin* bearing the ***same number as that assigned to the station being set up.*** Always ***Disconnect the Selector Light Lead*** as soon as a station has been set up; failure to do so will cause the receiver to hum, and may result in the lamp being burned out.

7. After all the stations have been set up, located the Call Letters of your stations on the printed sheets supplied with the receiver. Remove the desired call letter discs from the sheets. Remove the metal ferrules from the buttons, place the call letter discs behind the celluloid and press the ferrules back on the proper buttons.

8. The only operations necessary to receive any of the ten stations set up as outlined above are: Turn the Master Control Switch to the Center position, allow about one minute for the tubes to heat, press the button with the call letters of the desired station Holding the Button Down Until the Pointer Stops Moving and the Station is Heard, then adjust the tone and volume. Be sure that the Band Selector switch is in the proper position for reception of Standard Broadcast stations.

ALINEMENT PROCEDURE

The Master Control Switch must be turned to the extreme right hand position for all alinement.

IF. Connect generator ground to receiver chassis. Using .1 mfd. condenser in series with the high side of the generator, apply 456 kc. signal to the grid of the 6D6 second IF amplifier tube and aline the PRIMARY only of the third IF transformer. (See above diagram.) Connect generator to grid of 6D6 first IF tube and aline the second IF transformer. Repeat for transformer No. 1 applying signal to grid of 6A7 translator.

RF. (See circuit diagram for location of trimmers.) Using a 200 mmf. condenser in series with the high side of the generator, turn band selector switch all the way to the left, tuning condenser to minimum capacity, feed 1810 kc. signal to antenna terminal and adjust broadcast oscillator trimmer for top frequency. Set generator frequency at some point around 1500-1600 kc., and adjust broadcast antenna and RF trimmers. Set generator for 600 kc., tune receiver to signal and adjust the padder. The tuning condenser should be rocked back and forth through the signal while varying the padder in order to assure perfect alinement.

A 400 ohm resistor must be used in series with the generator as a "dummy" antenna for proper alinement of the two short wave bands. Set the band selector switch in the center position, adjust the oscillator top frequency for 6250 kc., then aline the antenna and RF trimmers at about 6000 kc. With the band selector in the extreme right position, adjust the top frequency of the high frequency to 18,100 kc., and aline the antenna and RF trimmers at about 16,000 kc. In order to make sure that the top end of the last band is set properly, it is best to screw the oscillator trimmer down tight, then unscrew to the second peak. The antenna and RF trimmers should be screwed down tight, then unscrewed to the first peak. This procedure must be followed in order that the oscillator and RF circuits will be set in the correct relation to each other, otherwise a "dead" spot at a lower frequency will result, and the dial calibration will not be correct. Usually, it is best to rock the tuning condenser back and forth slightly while making these adjustments at high frequencies.

AFC. Connect a high resistance DC voltmeter between the cathode of the 6D6 AFC control tube and ground. Turn the Master Control Switch to the CENTER position and the Band Selector Switch to the extreme left hand position. Apply a strong 456 kc. signal to the grid of the 6A7 translator and adjust the secondary of the third IF transformer until the voltage is the same as with no signal.

FOR OPERATING SUGGESTIONS SEE MODEL 183

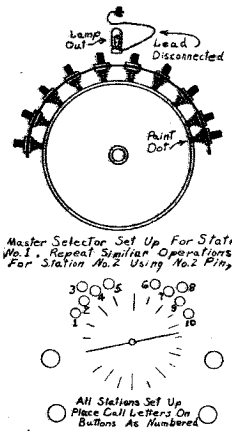

Tubes required are:

1—6D6	Radio Frequency Amplifier
1—6A7	Oscillator—translator
2—6D6	Intermediate Frequency Amplifiers
1—6H6G	Detector AVC—Discriminator
1—6G5	Cathode Ray Tuning Tube
1—6D6	AFC Control
1—76	Driver
1—76	Phase Inverter
2—42	Power Output
1—80	Rectifier

Master Control Switch: The extreme left position turns the power off. The center position connects the motor and the automatic frequency control for automatic tuning. The right hand position disconnects the motor and the automatic frequency control, and increases sensitivity for manual tuning of weak stations. (The right hand position is also used for setting up stations for automatic tuning.)

©John F. Rider, Publisher

MODEL 204 Series
Schematic, Socket
Trimmers, Tuner
Parts

DETROLA RADIO CORP.

FOR ALIGNMENT, SEE INDEX

For **INSTRUCTIONS FOR ADJUSTMENT AND OPERATION OF THE SERIES 204 ELECTRIC AUTOMATIC TUNING SYSTEM** See **SERIES 192**

Tubes required are:
1—6A7 Oscillator-translator
1—6D6 Intermediate Frequency Amplifier
1—6Q7G Detector AVC—First Audio Amplifier
1—76 Driver—Phase Inverter
1—76 Squelch Rectifier
2—42 Power Output
1—80 Rectifier
1—6G5 Cathode Ray Tuning Tube (on models equipped with "eye" tuning indicator)

POWER SUPPLY This receiver is designed to operate on 50 to 60 cycle alternating current only. The power transformer may be connected to operate on a number of voltages as shown in table below. To set the transformer to correspond to your line potential, remove the small cover from top of transformer by taking out the two screws. Insert the connector prong on end of lead into the connector desired: (See table below.)

Connector Marked	Line Potential
105	90-110 volts
130	110-140 volts
150	140-160 volts
220	180-230 volts
250	230-260 volts

Symbol	Part No.	Description
C1	4960	11-400 mmf Variable
C2,3,5,11,30	1611	3-35 mmf trimmer
C4,7,9	2597	1-10 mmf trimmer
C6,22	572	.1-200v
C8	2793	.006-600 padder
C10	2560	200-400 mmf padder
C14	2780	50 mmf mica
C12	3272	30 140 mmf padder
C13	576	.02 400v
C15,17		IF trimmers
C16	2792	.2-200v
C18,20	1286	250 mmf mica
C19	580	.05-200v
C21	565	.01-200v
C23,25	576	.02-400v
C24	581	.005-600v
C26	824	.002-600v
C27	3375	16 mf 450v
C28	3351	8 mf 225v reg.
C29	3358	.2-400v
R1,2	2689	100 ohs ⅓w
R3,7,17	631	50 M ⅓w
R4	636	40 M ⅓w
R5	617	20 M ⅓w
R6,11	624	1 meg. ⅓w
R8	2726	500 M V.C.
R12	2737	2 meg. T.C.
R13	2730	200M 10% ⅓w
R14	2881	400M 10% ⅓w
R15	2880	100M 10% ⅓w
R16	2883	5M 10% ⅓w
R18,9,10	2731	500M 10% ⅓w
R19	3353	250 ohm 2w
R20	2882	15 ohm 10% ⅓w
R21	4535	20 ohm 1w
R22	634	500 ohm ⅓w

4689	Pointer	
4613	Band switch	
4614	Antenna coil	
4962	Oscillator coil	
4841	Power transformer	
3462-1	1st IF transformer	
3464-1	2nd IF transformer	
4616	L.W. antenna coil	
2777	M.W. antenna coil	
4392	Contact ribbon	
4377	Contact pins	
4394	Motor assembly	
3346	Speaker 8"	
3710	Speaker 10"	

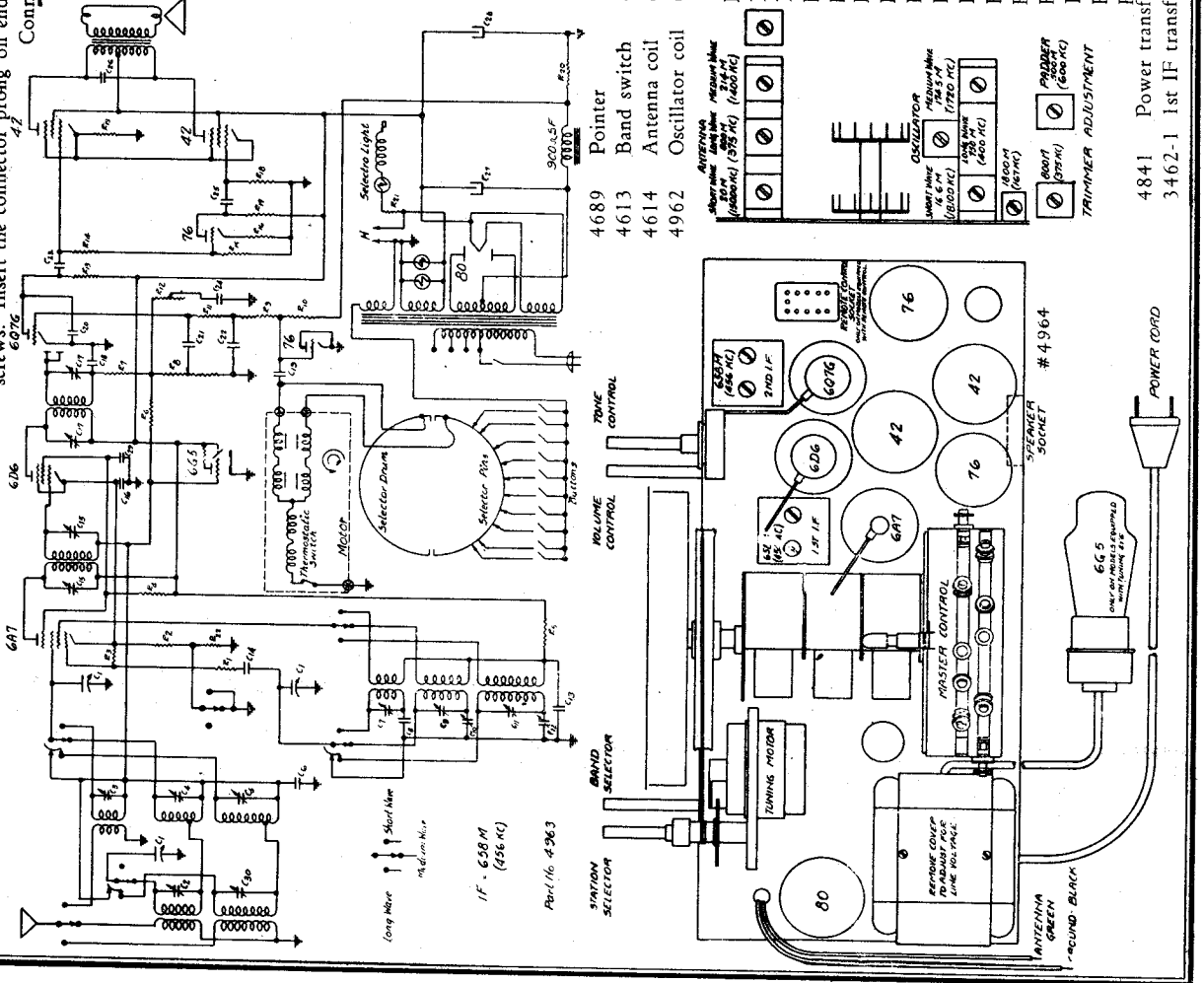

©John F. Rider, Publisher

MODEL 211
Schematics, Socket Trimmers

DETROLA RADIO CORP.

MODEL 206
MODEL 208A
MODEL 208AP(Phono.)

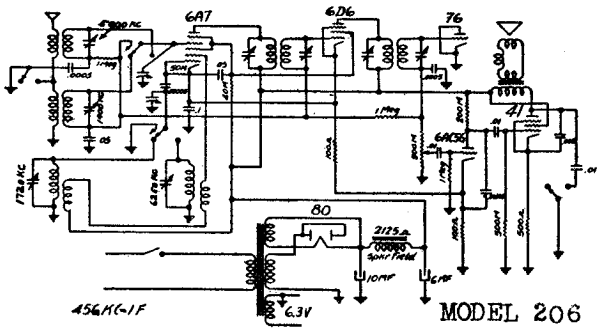

MODEL 206

In left hand position broadcast stations operating on frequencies of 540 to 1720 kilocycles will be received. In the right hand position of the wave switch, short wave stations operating on frequencies of 2300 to 6250 kilocycles will be heard.

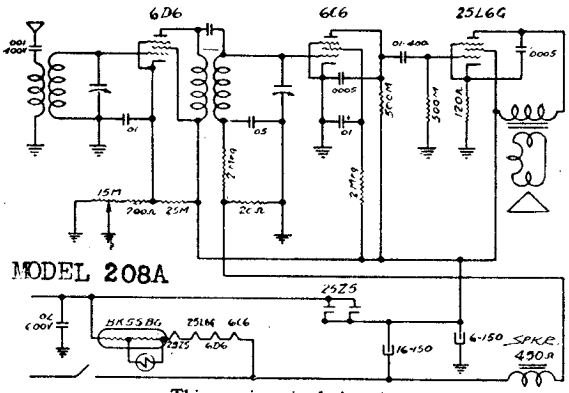

This receiver is designed to receive broadcast stations operating on frequencies between 540 K.C. and 1600 K.C. and police stations operating between 1600 K.C. and 1712 K.C.

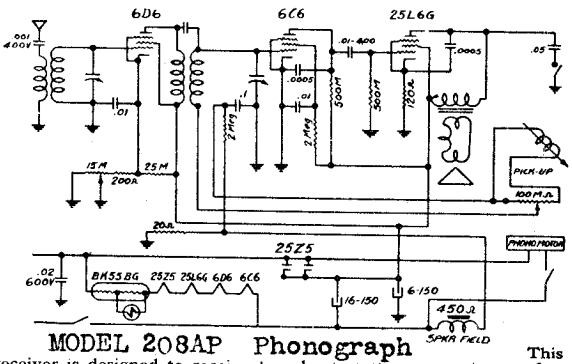

This receiver is designed to receive broadcast stations operating on frequencies between 1600 K.C. and 1712 K.C.

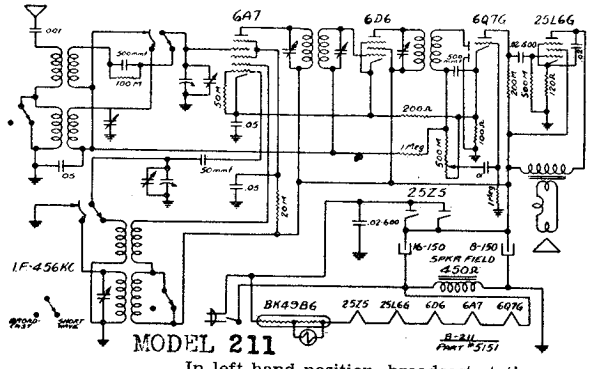

In left hand position, broadcast stations on frequencies between 540 and 1720 K.C. will be received. When the band switch is set to the right hand position, short wave stations operating on wave lengths from 2300 to 6250 K.C. will be heard.

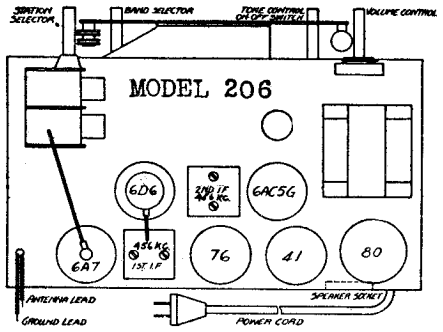

This receiver is designed to operate on 105 to 125 volts, 60 cycles. Do not connect to any other supply.

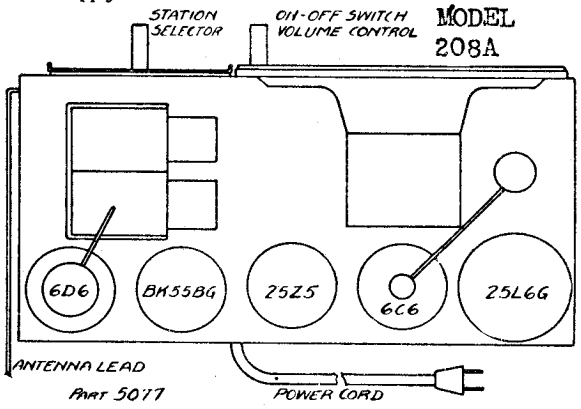

This receiver is designed to operate on 105 to 125 volts, direct or alternating current.

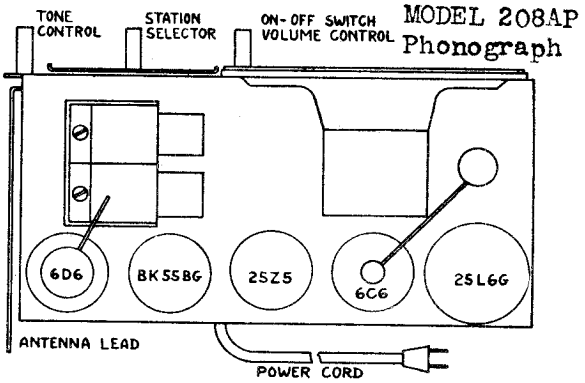

THIS RECEIVER IS DESIGNED TO OPERATE ON 105 TO 125 VOLTS 60 CYCLE ALTERNATING CURRENT ONLY.

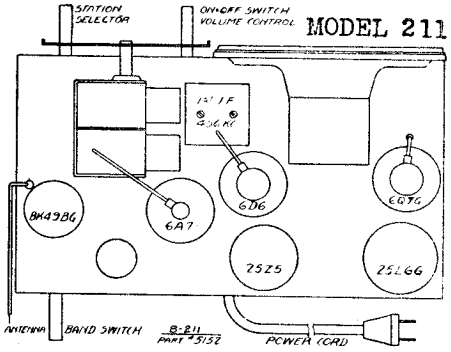

This receiver is designed to operate on 105 to 125 volts, direct or alternating current.

©John F. Rider, Publisher

MODEL 212
MODEL 216, Detrola Jr. Peewee Schematics, Socket, Trimmers

DETROLA RADIO CORP.

MODEL 220
Schematic, Socket, Trimmers Tuner

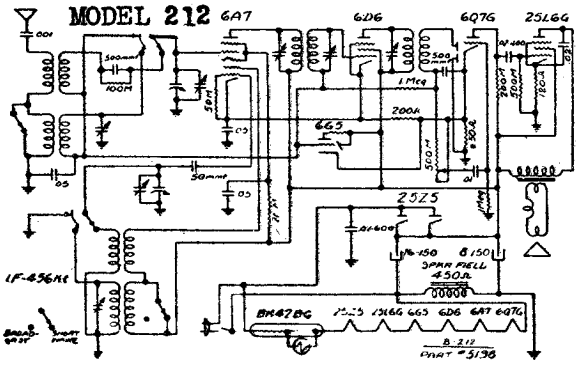

In left hand position, broadcast stations on frequencies between 540 and 1720 K.C. will be received. When the band switch is set to the right hand position, short wave stations operating on wave lengths from 2300 to 6250 K.C. will be heard.

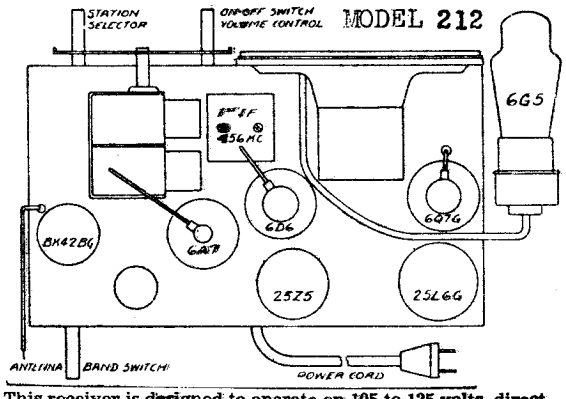

This receiver is designed to operate on 105 to 125 volts, direct or alternating current.

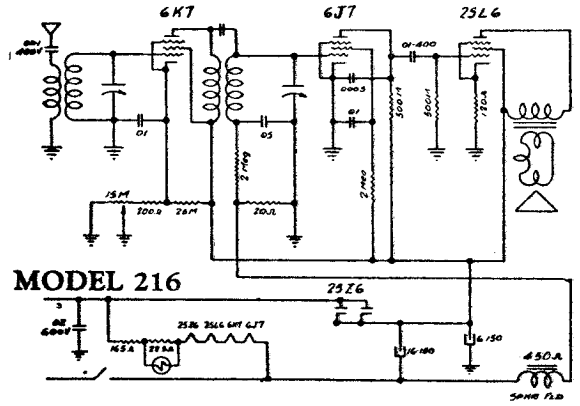

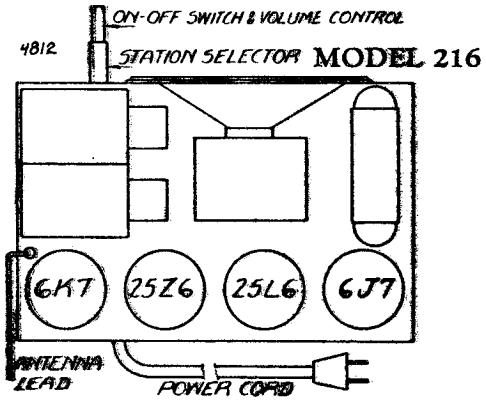

DETROLA JR. PEE-WEE

This receiver is designed to operate on 105 to 125 volts, direct or alternating current. Do not connect to any other source.

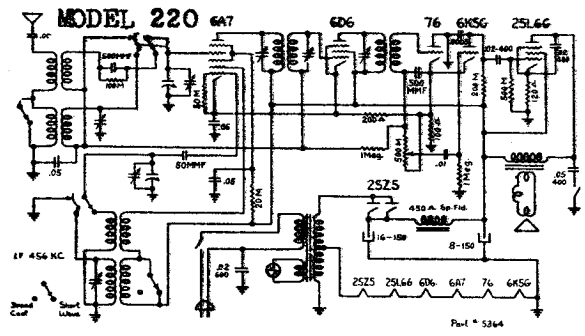

In left hand position, broadcast stations on frequencies between 540 and 1720 K.C. will be received. When the band switch is set to the right hand position, short wave stations operating on wave lengths from 2300 to 6250 K.C. will be heard.

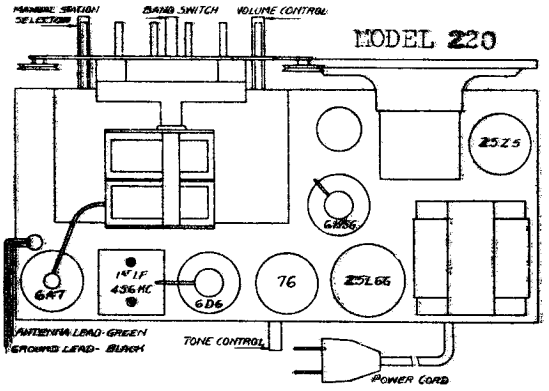

This receiver is designed to operate on 105 to 125 volts, 60 cycle alternating current only.

INSTRUCTIONS FOR ADJUSTMENT AND OPERATION OF MECHANICAL AUTOMATIC TUNING SYSTEM

The following simple procedure should be followed to set up the automatic tuning mechanism to select your favorite stations.

Any of your favorite stations may be set up on any button, but it is recommended that the buttons be set up in the same sequence as they are received on the dial. Loosen one of the selector buttons located below the dial by turning it to the left. A slot is provided in the button into which a coin may be inserted to facilitate turning. After turning the button a few turns to the left press it in as far as it will go. While holding button in this position, tune in station desired very carefully in regular way with the manual tuning knob. Still holding the button in, fix the adjustment by turning the button to right until tight. Thereafter, the station set up on this button will be received whenever this button is pressed in as far as it will go.

All buttons are set up in the same way. After all buttons are set up, locate and remove the corresponding station tabs from accompanying call letter sheets and, after moistening slightly, press them in the ends of the buttons.

Do not set up weak stations, or distant stations too weak to afford clear reception at all times.

©John F. Rider, Publisher

DETROLA RADIO CORP.

MODEL 218, Peewee
MODEL 219, Super Peewee
MODEL 221
Schematic, Socket, Trimmers

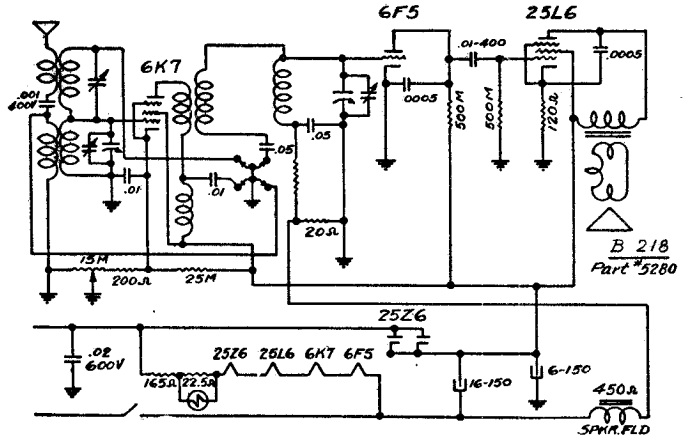

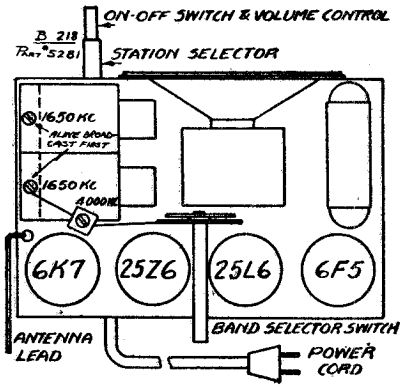

DETROLA PEE-WEE MODEL 218

This receiver is designed to operate on 105 to 125 volts, direct or alternating current. The BAND SELECTOR SWITCH knob, on the back of the set, should be turned to the left to receive standard broadcast stations (540-1600 KC). To receive short-wave stations operating on frequencies 1600-4000 KC, turn the knob to the right.

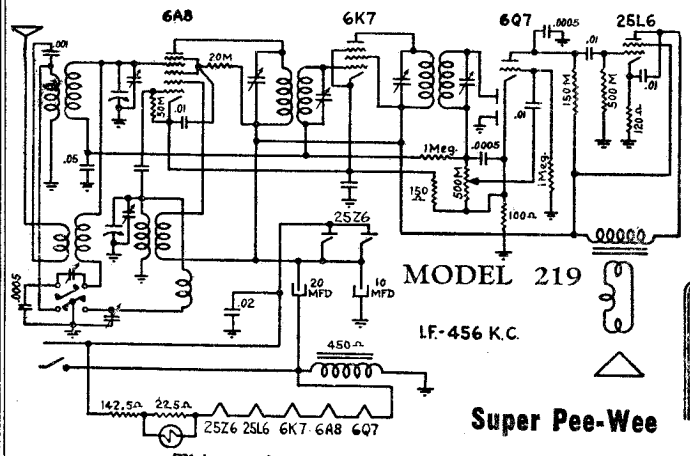

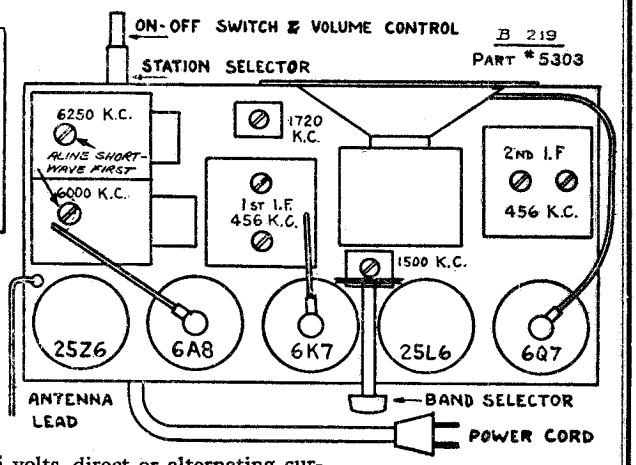

This receiver is designed to operate on 105 to 125 volts, direct or alternating current. The *Band Selector Switch* knob, on the back of the set, should be turned to the left to receive standard broadcast and 1712 KC police (540-1720 KC). To receive short-wave stations operating on frequencies 2300-6250 KC, turn the knob to the right.

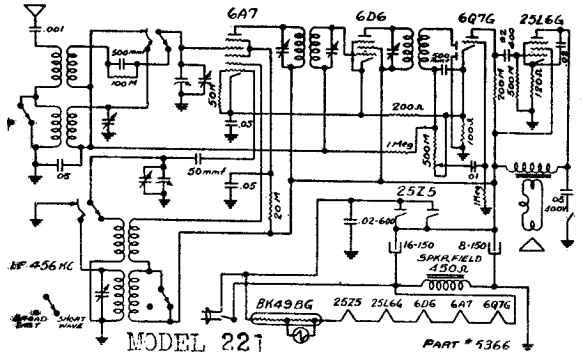

This receiver is designed to operate on 105 to 125 volts, direct or alternating current.

FOR AUTOMATIC TUNING SYSTEM See MODEL 220

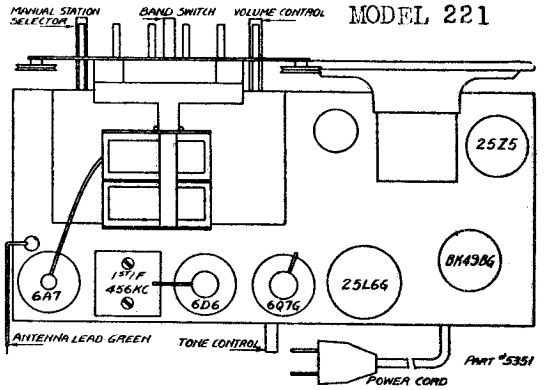

In left hand position, broadcast stations on frequencies between 540 and 1720 K.C. will be received. When the band switch is set to the right hand position, short wave stations operating on wave lengths from 2300 to 6250 K.C. will be heard.

©John F. Rider, Publisher

MODEL 222
MODEL 226
MODEL 227

DETROLA RADIO CORP.

MODEL 235 Phono. Schematics, Socket Trimmers

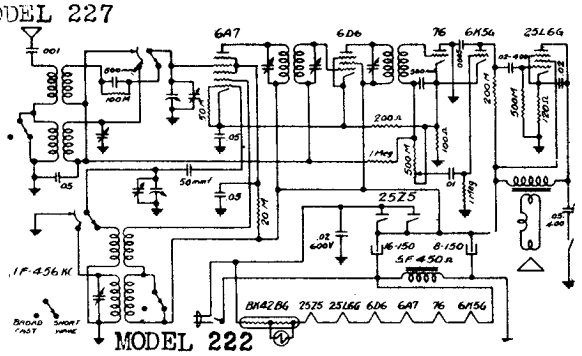

MODEL 222

This receiver is designed to operate on 105 to 125 volts, direct or alternating current.

FOR AUTOMATIC TUNING SYSTEM-See MODEL 220

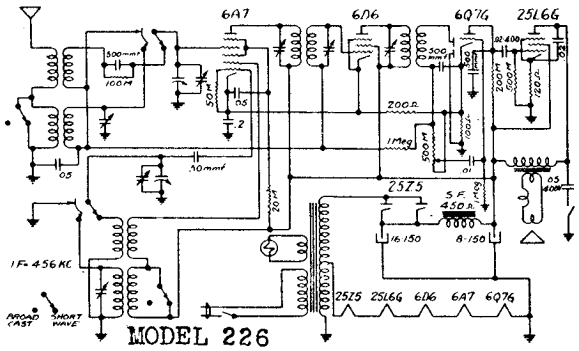

MODEL 226

This receiver is designed to operate on 105 to 125 volts, 60 CYCLE, ALTERNATING CURRENT ONLY.

AUTOMATIC TUNING SYSTEM-See MODEL 220

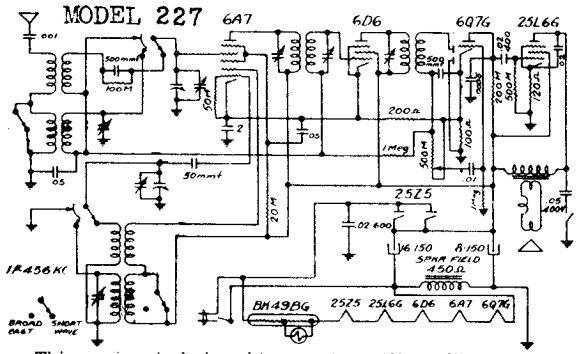

This receiver is designed to operate on 105 to 125 volts, direct or alternating current.

AUTOMATIC TUNING SYSTEM See MODEL 220

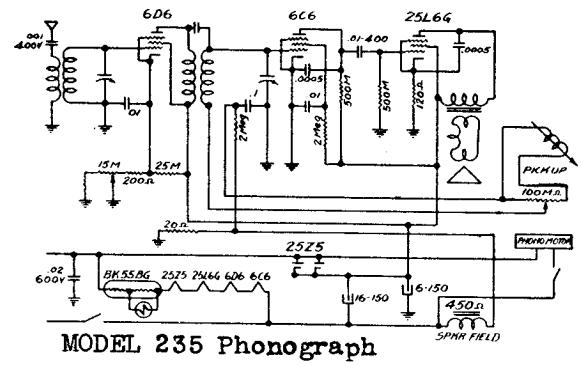

MODEL 235 Phonograph

105 TO 125 VOLTS 60 CYCLE ALTERNATING CURRENT ONLY.

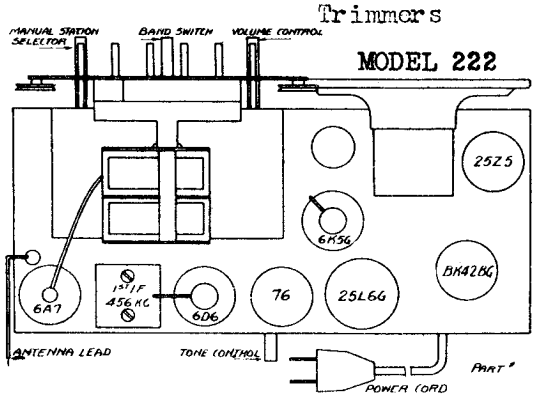

In left hand position, broadcast stations on frequencies between 540 and 1720 K.C. will be received. When the band switch is set to the right hand position, short wave stations operating on wave lengths from 2300 to 6250 K.C. will be heard.

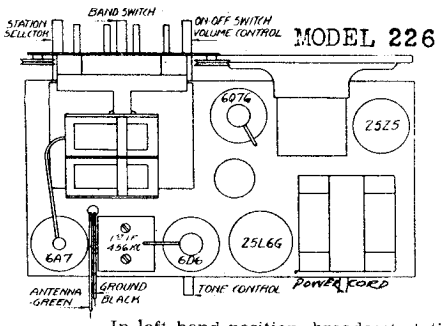

In left hand position, broadcast stations on frequencies between 540 and 1720 K.C. will be received. When the band switch is set to the right hand position, short wave stations operating on wave lengths from 2300 to 6250 K.C. will be heard.

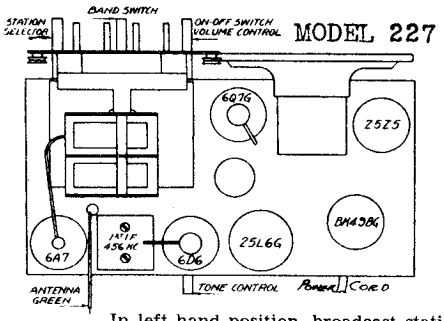

In left hand position, broadcast stations on frequencies between 540 and 1720 K.C. will be received. When the band switch is set to the right hand position, short wave stations operating on wave lengths from 2300 to 6250 K.C. will be heard.

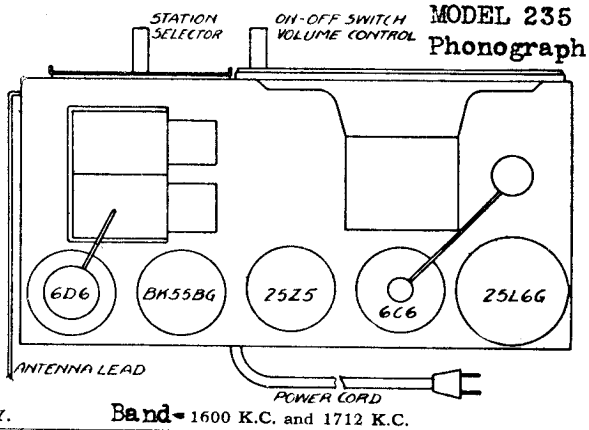

Band- 1600 K.C. and 1712 K.C.

©John F. Rider, Publisher

MODEL 223
Schematic, Socket
Trimmers, Parts
Tuner, Alignment

DETROLA RADIO CORP.

Unless specifically stated otherwise, these receivers are designed to operate on ***117 volts 60 cycles alternating current only.***

This receiver covers a continuous short wave range of 1.6 to 16.5 megacycles (1600 to 16,500 kilocycles) in two bands, standard broadcast range from 540 to 1600 kilocycles.

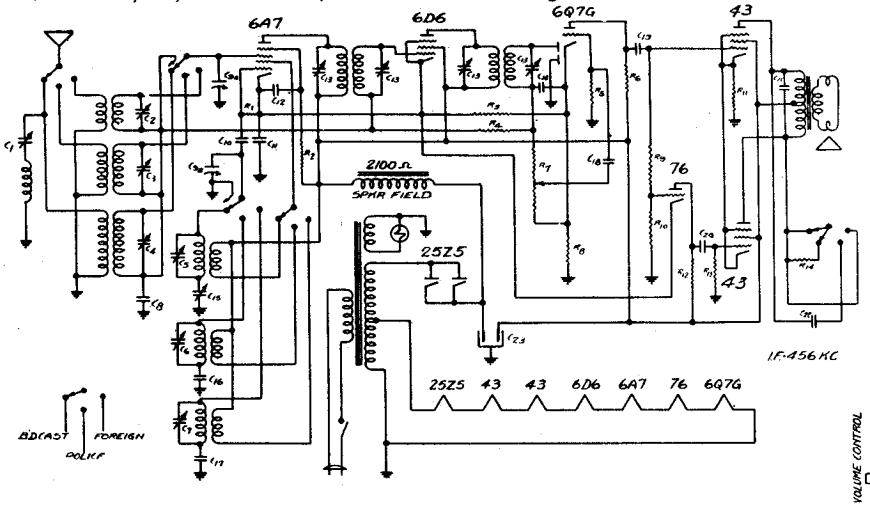

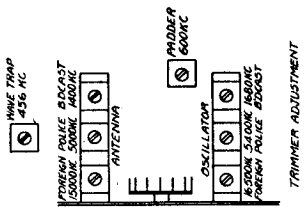

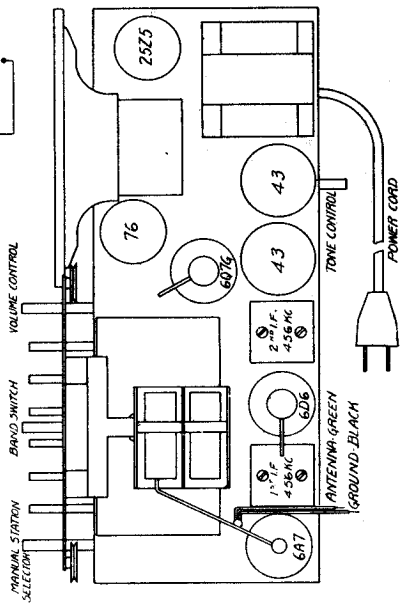

FACTORY 223 SERIES

Automatic Tuning System, See MODEL 220

Symbol	*Part No.*	*Description*
C-1	3272	30-140 mmf Trimmer
C-2, 5, 7	1611	3-35 mmf Trimmer
C-3, 4, 6	2597	1-10 mmf Trimmer
C-8, 11	572	.1 200 V.
C-9a, b	5377	Tuning Condenser
C-10	2780	50 mmf Mica
C-12	580	.05 200 V.
C-13		IF Trimmer
C-14	4810	.0005 400 V.
C-15	2560	220-500 mmf Padder
C-16	2741	1330 mmf 5%
C-17	3871	.006 600 V. 5%
C-18	568	.01 400 V.
C-19, 20		.02 400 V.
C-21	581	.005 600 V.
C-22	2600	.02 600 V.
C-23	5389	20, 12 mf Electrolytic
R-1, 10	631	50M ⅓ W.
R-2	617	20M ⅓ W.
R-3	2605	200 ohm ⅓ W. 10%
R-4, 5	624	1 Meg. ⅓ W.
R-6	598	200M ⅓ W.
R-7	5332	500M Volume Control
R-8	2698	100 ohm ⅓ W. 10%
R-9	2881	400M ⅓ W. 10%
R-11	5395	500 ohm wire wound 10%
R-12	603	100M. ⅓ W.
R-13	615	500M ⅓ W.
R-14	4529	10M ⅓ W. 10%

5393	Power Transformer
3463-10	1st IF Transformer
3463-4	2nd IF Transformer
5096	Oscillator Coil
5392	Antenna Coil
5390	Band Switch
5394	Tone Control Switch
530	Pilot Light Bulb
5387	Dial Chart
5396	Escutcheon
5397	Button escutcheon
5358	Tuning Buttons
5357	Call Letter Sheets
5388	Speaker
3904	Knobs

Tubes required are:

1—6A7	Oscillator Translator	1—76 Phase Inverter
1—6D6	Intermediate Frequency Amplifier	2—43 Power Output
1—6Q7G	Detector—AVC—First Audio Amplifier	1—25Z5 Rectifier

ALINEMENT PROCEDURE

Connect a high impedance AC voltmeter across loud-speaker terminals. Volume control should be set a few degrees back of maximum volume position. Use a weak signal from generator, strong signals tend to cause improper adjustments.

I.F.: Connect the generator ground to receiver chassis. Using .1 mfd. condenser in series with high side of generator, apply 456 kc. signal to grid of 6D6 I.F. amplifier tube, and aline transformer No. 2. Connect generator to grid of 6A7 tube and aline transformer No. 1.

RF. (See above diagram for location of trimmers.)

Using a 200 MMF. condenser in series with the high side of the generator, turn band selector switch to left hand position and the tuning condenser to about 600 kc. Feed a 456 kc. signal to the antenna and adjust wave trap trimmer for minimum response. With the tuning condenser at minimum capacity feed 1660 kc. signal to the antenna and adjust broadcast oscillator trimmer for top frequency. Set generator frequency at about 1400 kc. Adjust broadcast antenna trimmer. Set generator for 600 kc. tune receiver to signal and adjust the padder. The tuning condenser should be rocked back and forth through the signal while varying the padder in order to assure perfect alinement.

Using 400 ohm resistor in series with generator, set band selector in center position, set generator to 5400 kc and adjust oscillator trimmer for top frenquency. Set generator to 5000 kc, tune receiver to signal and adjust antenna trimmer.

Turn band selector to extreme clockwise position. Using 400 ohm resistor in series with generator, set oscillator top frequency for 16,500 kc—screw trimmer down tight, then unscrew to *second* peak. Set generator to 15,000 kc, tune receiver to signal and adjust antenna trimmer—Screw trimmer down tight, then unscrew to *first* peak, rocking the tuning condenser back and forth through the signal while the adjustment is being made. **Above procedure for alinement at 15,000 kc must be followed exactly to insure proper tracking. A dead spot at about 12,000 kc will result if antenna and oscillator circuits are not set in proper relation to each other.**

©John F. Rider, Publisher

MODEL 225 Series
MODEL 228 Series, Phono. **DETROLA RADIO CORP.**
Schematics, Socket, Parts, Alignment

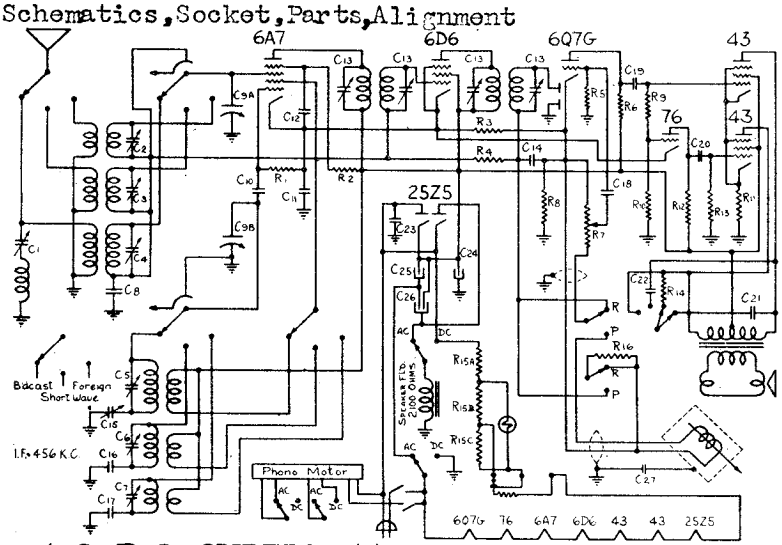

A.C.-D.C. SUPERHETERODYNE SERIES 228
(Phonograph pick up)

Tubes required **For Series 225 and 228:**

1—6A7 Oscillator Translator
1—6D6 Intermediate Frequency Amplifier
1—6Q7G Detector—AVC—First Audio Amplifier
1—76 Phase Inverter
2—43 Power Output
1—25Z5 Rectifier

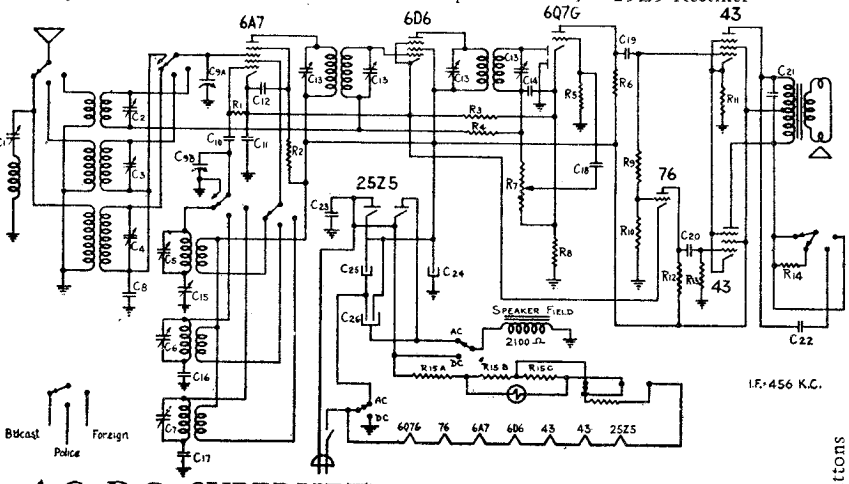

A.C.-D.C. SUPERHETERODYNE SERIES 225

Series 225 and 228.

Symbol	Part No.	Description
C-1	3272	30-140 mmf Trimmer
C-2, 5, 7	1611	3-35 mmf Trimmer
C-3, 4, 6	2597	1-10 mmf Trimmer
C-8, 11	572	.1 200 V.
C-9a, b	5377	Tuning Condenser
C-10	2780	50 mmf Mica
C-12	580	.05 200 V.
C-13		IF Trimmer
C-14	4810	.0005 400 V.
C-15	2560	220-500 mmf Padder
C-16	2741	1330 mmf 5%
C-17	3871	.006 600 V. 5%
C-18	568	.01 400 V.
C-19, 20		.02 400 V.
C-21	581	.005 600 V.
C-22, 23	2600	.02 600 V. Electrolytic
C-24	5272	8 MF. 150 V. Electrolytic
C-25	5420	8 MF. 150 V. Electrolytic
C-26	5419	8/8 MF. 250 V. Electrolytic
R-1, 10	631	50M ⅓ W.
R-2	617	20M ⅓ W.
R-3	2605	200 ohm ⅓ W. 10%
R-4, 5	624	1 Meg. ⅓ W.
R-6	598	200M ⅓ W.
R-7	5332	500M Volume Control
R-8	2698	100 ohm ⅓ W. 10%
R-9	2881	400M ⅓ W. 10%
R-11	5395	500 ohm wire wound 10%
R-12, 16	603	100M. ⅓ W.
R-13	615	500M ⅓ W.
R-14	4529	10M ⅓ W. 10%
R-15A	5421	30 ohm
R-15B	5421	10 ohm
R-15C	5421	20 ohm
	3463-10	1st IF Transformer
	3463-4	2nd IF Transformer
	5096	Oscillator Coil
	5392	Antenna Coil
	5390	Band Switch
	5394	Tone Control Switch
	5390	Band Switch
	5394	Tone Control Switch
	530	Pilot Light Bulb
	5387	Dial Chart
	5396	Escutcheon
	5397	Button escutcheon
	2725	AC-DC Switch
	5234	Phono Pick Up
	5233	Turn Table
	5240	Radio-Phono Switch
	5465	Phono Motor
	5422	AC-DC Switch

Tuning Buttons 5353
Call Letter Sheets 5357
Speaker 5388
Knobs 3904

Series 228 only

Series 225 only

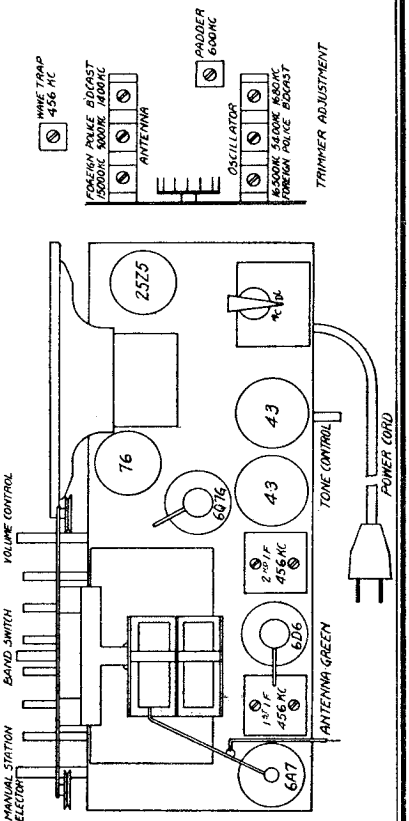

CHASSIS LAYOUT FOR SERIES 225 and 228

NOTE: Series 225 and 228 are designed to operate on 105 to 125 volts AC or DC. No ground is necessary on these models.
Series 225 and 228 have standard broadcast range from 540 to 1600 kilocycles and continous S.W. range of 1600 to 16,500 kilocycles in two bands.
For mechanical Automatic-Tuning System, of both Models,-See Model 220.
ALIGNMENT PROCEDURE for both series -- SEE MODEL 223.

©John F. Rider, Publisher

MODEL 231 Series
Schematic, Socket
Trimmers, Parts

DETROLA RADIO CORP.

Factory 231 Series

Tubes required are:
1—6A7 Oscillator-translator
1—6D6 Intermediate Frequency Amplifier
1—76 Detector—AVC
1—6K5G First Audio Amplifier
1—76 Driver—Phase Inverter
2—6V6G Power Output
1—80 Rectifier
1—6G5 Cathode Ray Tuning Tube (on models equipped with "eye" tuning indicator)

Series 231 - Designed to operate on 117 volts 60 cycles.
Bands, 540-1600, 1650-5400, 5400-16,000 kilocycles.
FOR ALIGNMENT AND AUTOMATIC TUNING SYSTEM :-see 183 Series.

SUPERHETERODYNE SERIES-231

Symbol	Part No.	Description	Symbol	Part No.	Description
C1	5508	3-gang 365 mmfd. Variable	R8	5512	500M Volume Control
C2		Trimmer on Variable	R9	5511	100M Tone Control
C3, 7, 11	1611	3-35 mmfd. Trimmer	R10	2730	200M 1/3 W.
C4, 5, 9	2597	1-10 mmfd. Trimmer	R11	2881	400M 1/3 W.
C6, 19	572	.1 mfd. 200 V.	R12	2880	100M 1/3 W.
C8	2793	.006 600 V. Padder	R13, 14	2883	5M 1/3 W.
C10	2741	1330 mmfd. Padder	R15	2731	500M 1/3 W.
C12	2560	350 mmfd. Variable Padder	R16	3353	250 ohm 2 W. Flexohm
C13, 18	4810	.0005 mfd. 400 V.	R17	2605	200 ohm 1/3 W.
C14	2780	50mmfd. Mica		5506	Power Transformer
C15, 17		I.F. Trimmers		3463-11	First I.F. Transformer
C16	2792	.2 mfd. 200 V.		3463-12	Second I.F. Transformer
C24	5516	.8 mfd. 250 W.V. Elect.		2845	B.C. Antenna Coil
C20, 21, 22	576	.02 mfd. 400 V.		5095	S.W. Antenna Coil
C23	2601	.01 mfd. 600 V.		5096	Oscillator Coil
C25	5507	16 mfd. 350 W.V. Elect.		4395	Drive Cable
C26	5101	16 mfd. 225 W.V. Reg. Elect.		5520	8" Speaker
C27	824	.002 mfd. 600 V.		5515	Motor
R1, 2	2689	100 ohms 1/3 W.		5513	Band Switch
R3, 5	631	50M 1/3 W.		4392	Contact Ribbon
R4	636	40M 1/3 W.		4377	Contact Pins
R6, 7	624	1 Meg. 1/3 W.			

©John F. Rider, Publisher

MODEL R300A Converter
MODEL 1900
Schematics

DETROLA RADIO CORP.

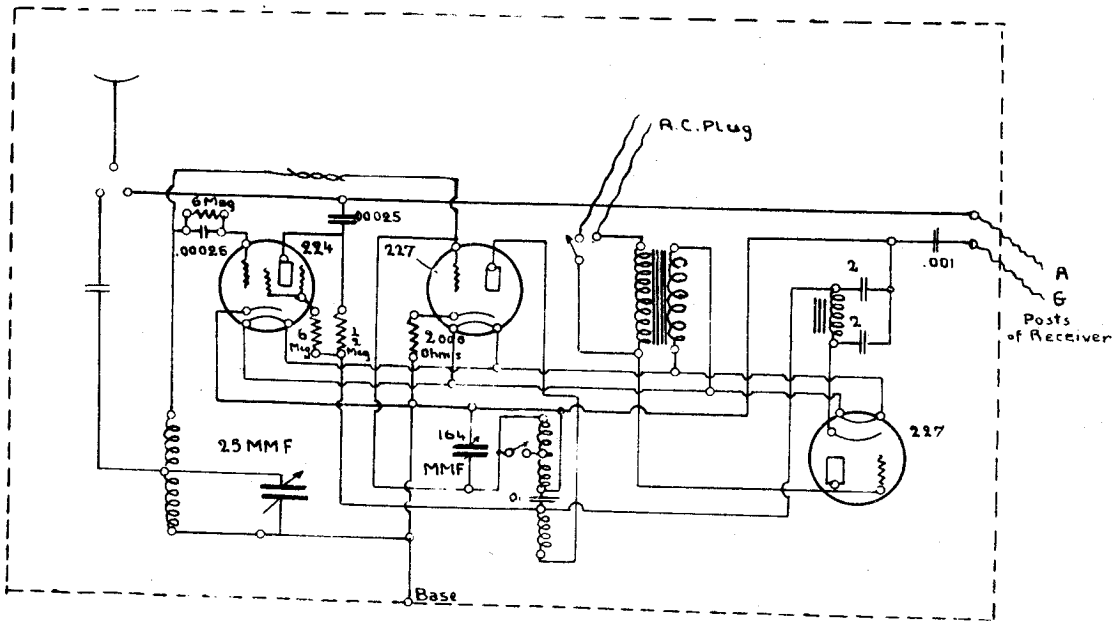

This converter uses one-twenty-four or fifty-one and two-twenty-seven tubes.

ADJUSTING 50 M. M. F. D. BALANCING CONDENSER

After hooking converter to broadcast set tune in station around 75 meters and adjust the small balancing condenser to the most sensitive position and that will be correct for all wave lengths. The setting need never be changed.

DETROLA SHORT WAVE CONVERTER
MODEL R 300A

DETROLA RADIO CORP. DETROIT, MICH.

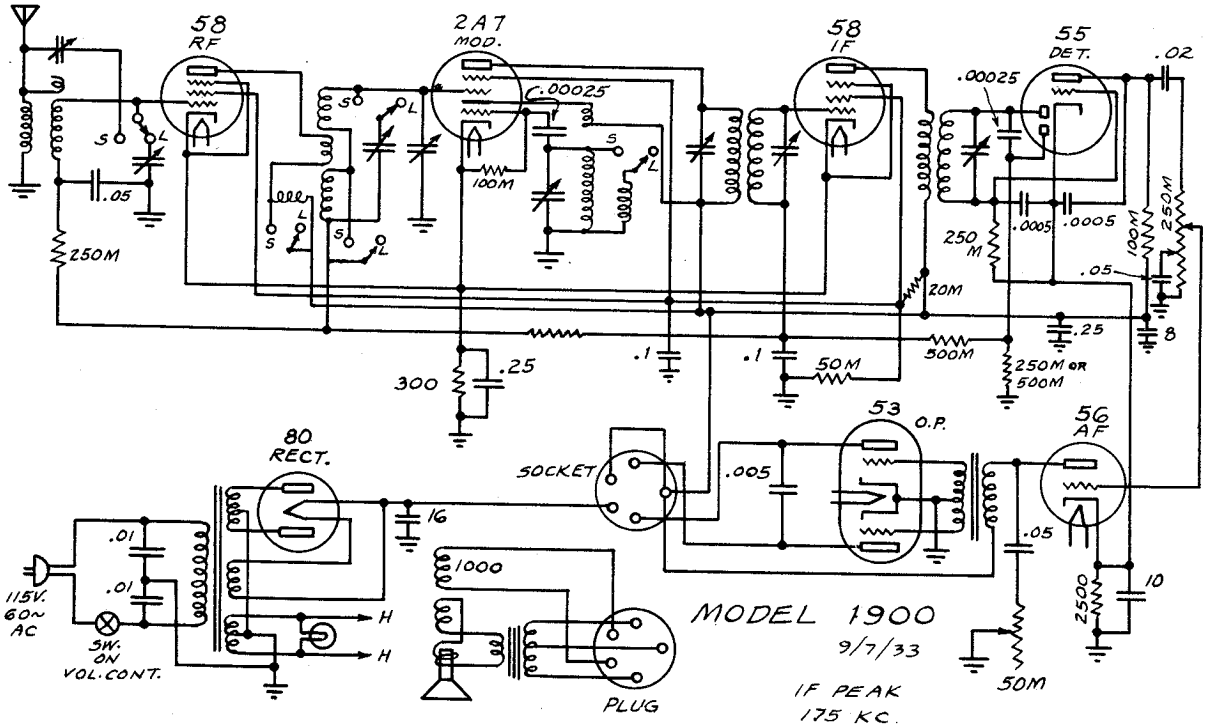

©John F. Rider, Publisher

©John F. Rider, Publisher

DEWALD RADIO

MODELS 406, 406LW
Schematic, Parts
MODELS 1104, 1105
Alignment, Parts

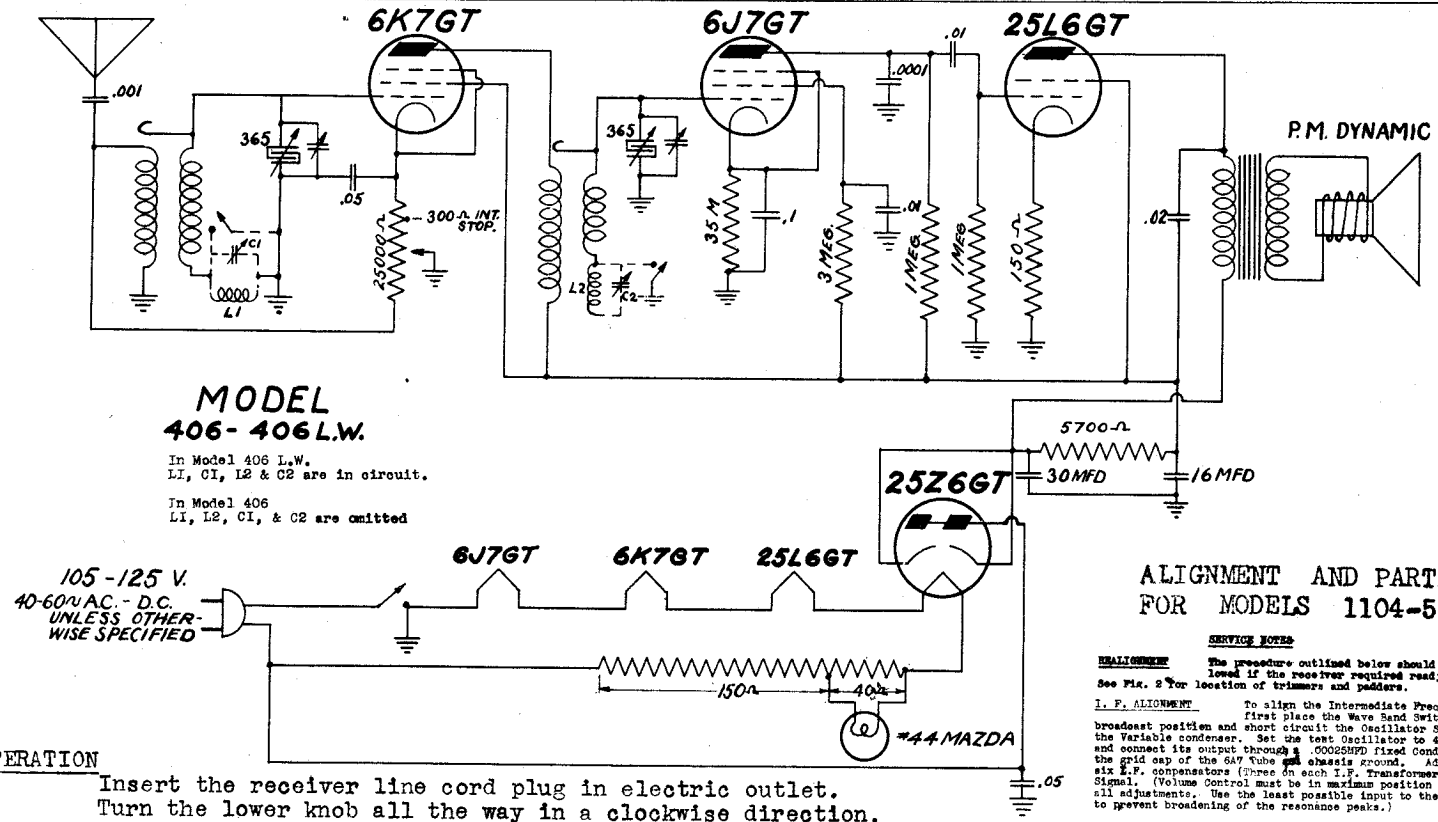

MODEL
406 - 406 L.W.

In Model 406 L.W.
L1, C1, L2 & C2 are in circuit.

In Model 406
L1, L2, C1, & C2 are omitted

OPERATION

Insert the receiver line cord plug in electric outlet. Turn the lower knob all the way in a clockwise direction. Allow approximately one minute for the tubes to heat up and receiver is then ready for operation.

NOTE

If receiver is being operated on D.C. and no signals are heard after one minute, reverse the line cord plug in the outlet. To turn receiver "off", rotate the lower knob all the way in a counter clockwise direction until a snap is heard and the dial lamp goes out.

MODEL 406 - 406 LW LIST PRICES OF REPLACEMENT PARTS

1510	Antenna Coil	.50	3446	comb. vol. cont.	1.00
1511	Det Coil	.50	8607	pilot lamp	.10 net
2447	2 gang var. cond.	2.00	8882	knobs	.10
2448	comb. electrolytic	1.25		Walnut cabinet	2.50
6098	scale	.25		Colored cabinet	3.50
7240	speaker	3.50			

PRICES SUBJECT TO CHANGE WITHOUT NOTICE

ALIGNMENT AND PARTS FOR MODELS 1104-5

SERVICE NOTES

REALIGNMENT The procedure outlined below should be followed if the receiver required readjusting. See Fig. 2 for location of trimmers and padders.

I. F. ALIGNMENT To align the Intermediate Frequency stages, first place the Wave Band Switch in broadcast position and short circuit the Oscillator Section of the Variable condenser. Set the test Oscillator to 456 K.C. and connect its output through a .00025MFD fixed Condenser to the grid cap of the 6A7 Tube and chassis ground. Adjust the six I.F. compensators (Three on each I.F. Transformer) for Max Signal. (Volume Control must be in maximum position during all adjustments. Use the least possible input to the receiver to prevent broadening of the resonance peaks.)

BROADCAST ALIGNMENT After the Intermediate Frequency stages have been completely aligned, connect external test oscillator to the Antenna and Ground binding posts of the set. See Fig. 3-A. Set the band switch to broadcast position. Set test Oscillator to 1500 K.C. and adjust the three broadcast Compensators for maximum gain. Next, set dial at 600 K.C. and adjust broadcast padder for maximum signal, rocking Variable Condenser at the same time. Now repeat repeaking operation at 1500 K. C.

INTERMEDIATE S.W. ALIGNMENT Turn Wave Band Switch to Intermediate S. W. position and set Variable Condenser to 5000 K. C. Adjust test oscillator to this frequency and adjust 3 intermediate s. w. trimmers for maximum gain. Next set dial at 1900 K. C. and adjust intermediate s. w. padder for maximum signal. Now repeat repeaking operation at 5000 K. C.

SHORT WAVE ALIGNMENT Turn Wave Band Switch to S. W. position and set Variable Condenser to 18 megacycles. Adjust test oscillator to this frequency and adjust three S. W. Trimmers for maximum signal.

LONG WAVE ALIGNMENT Turn Wave Band Switch to L. W. position and align Trimmers on long wave coils to 400 K. C. Adjust L. W. Padder at 160 K. C.

LIST PRICES OF REPLACEMENT PARTS

1356	filter choke	2.00	2425	3 gang var. cond.	5.10
1358	comb. ant. coil	2.50	3422	volume control	.90
1359	" det. "	2.40	3423	comb. tone cont.	1.10
1360	" osc. "	2.25	6085	dial scale	.75
1458	R.F. choke "	.35	7838	speaker	10.00
1484	first I.F. "	2.00	8542	pilot lamp	.10 net
1485	second I.F. "	2.00	8836	P.L. assembly	.15
1509	push-pull trans	2.50	8839	wave band switch	2.75
2288	dual padder	1.00	8840	phono. switch	1.00
2351A	40 mfd. elect.(wet)	1.25	8841	dial assembly	4.00
2382	5 " "	.50	8847	knob	.20
2435	16 " "	.50		cabinet	22.50

These receivers are designed to operate on 105-125 volts 40-60 cycles A.C. or D.C. The broadcast range coverage is 540-1750 K.C.

MODELS 530,530LW,531
531LW,534
MODELS 533,533LW
Schematics,Alignment

DeWALD RADIO

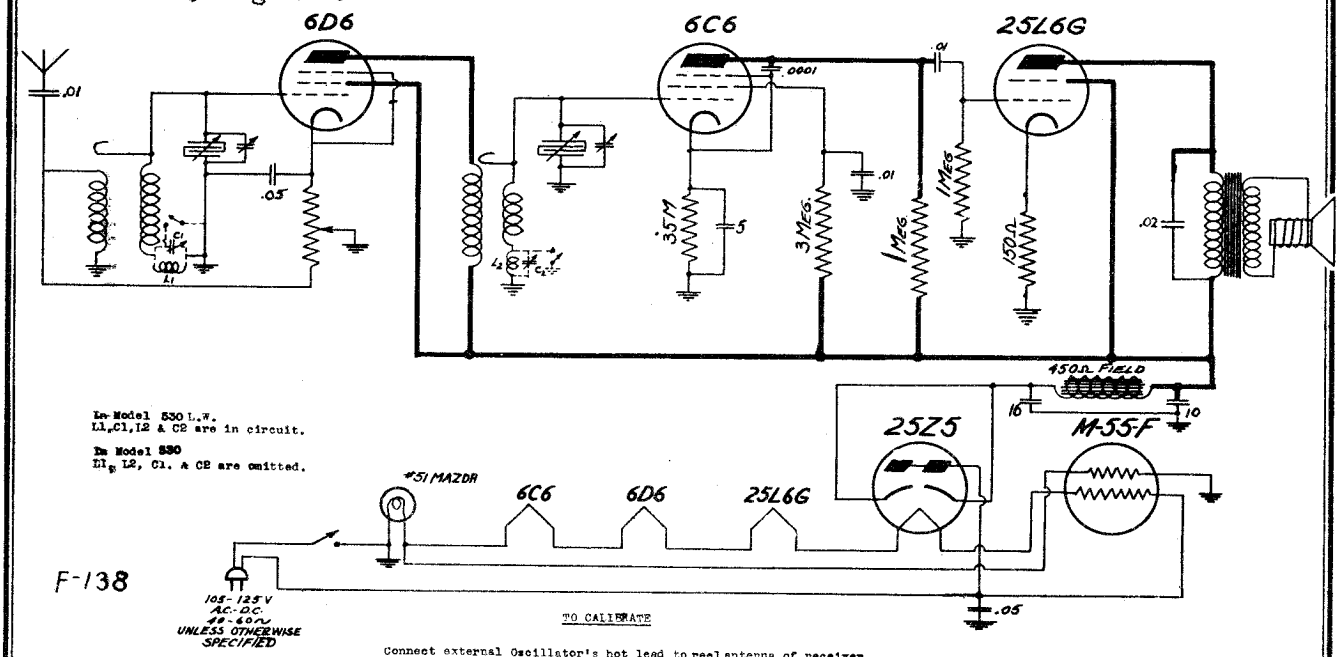

In Model 530 L.W.
L1,C1,L2 & C2 are in circuit.

In Model 530
L1, L2, C1, & C2 are omitted.

range
coverage is 540-1750K.C.

Connect external Oscillator's hot lead to reel antenna of receiver. Connect oscillator cold lead in series with a .1 or .1 MFD condenser to receiver chassis. Set oscillator at 1500KC and peak Variable Condenser trimmers for Maximum signal with condenser set approximately where 1500 comes in on scale.

MODELS 530,530LW,531
531LW,534

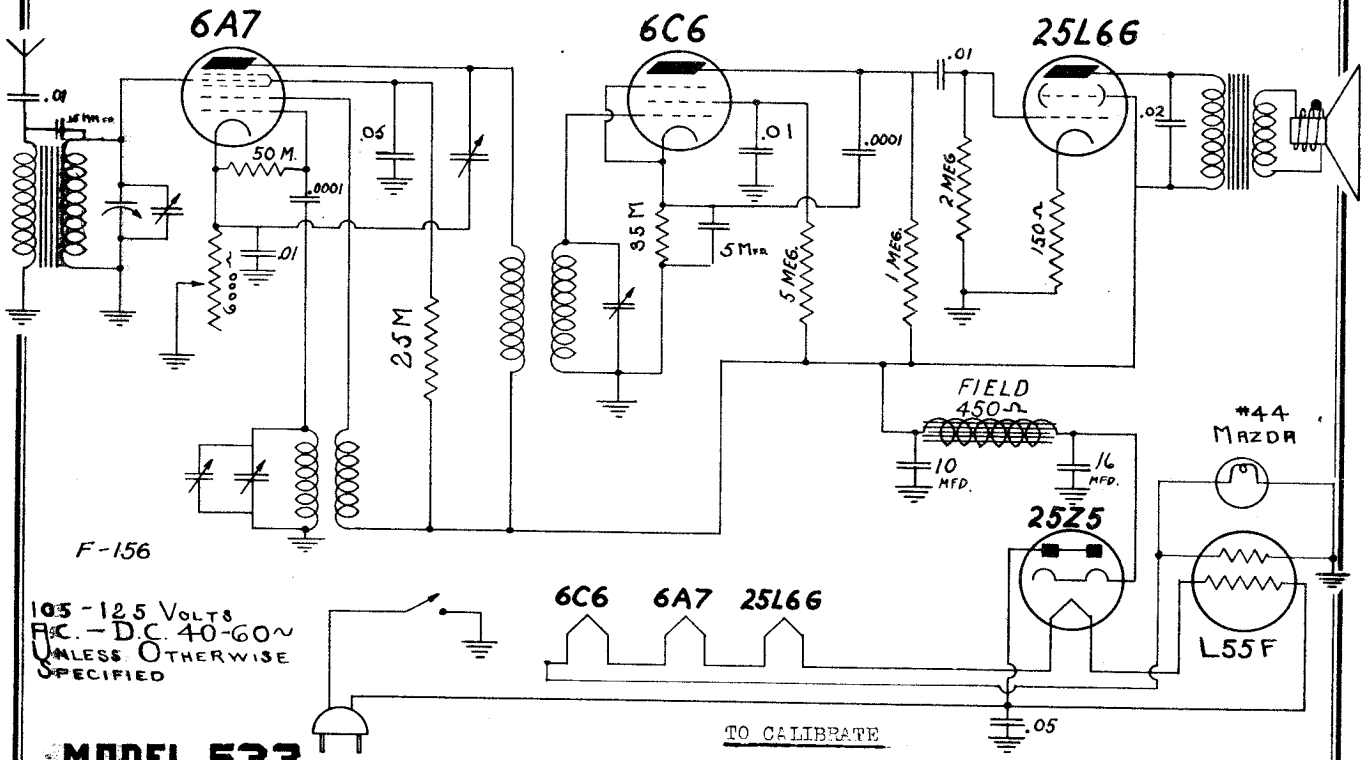

105-125 Volts
A.C.-D.C. 40-60~
Unless Otherwise
Specified

MODEL 533
533L.W.

Connect the antenna lead from the signal generator to the antenna of the receiver and the ground lead to the receiver chassis. Adjust the generator to 456 KC and adjust the two I.F. trimmers for maximum signal. Them adjust the generator and receiver to 1500 KC. and peak the variable condenser trimmers for maximum signal.

©John F. Rider, Publisher

DEWALD RADIO

MODELS 636, 636LW, 636S
636LW-S
MODELS 637, 637LW, 637S
637LW-S
Schematics, Alignment

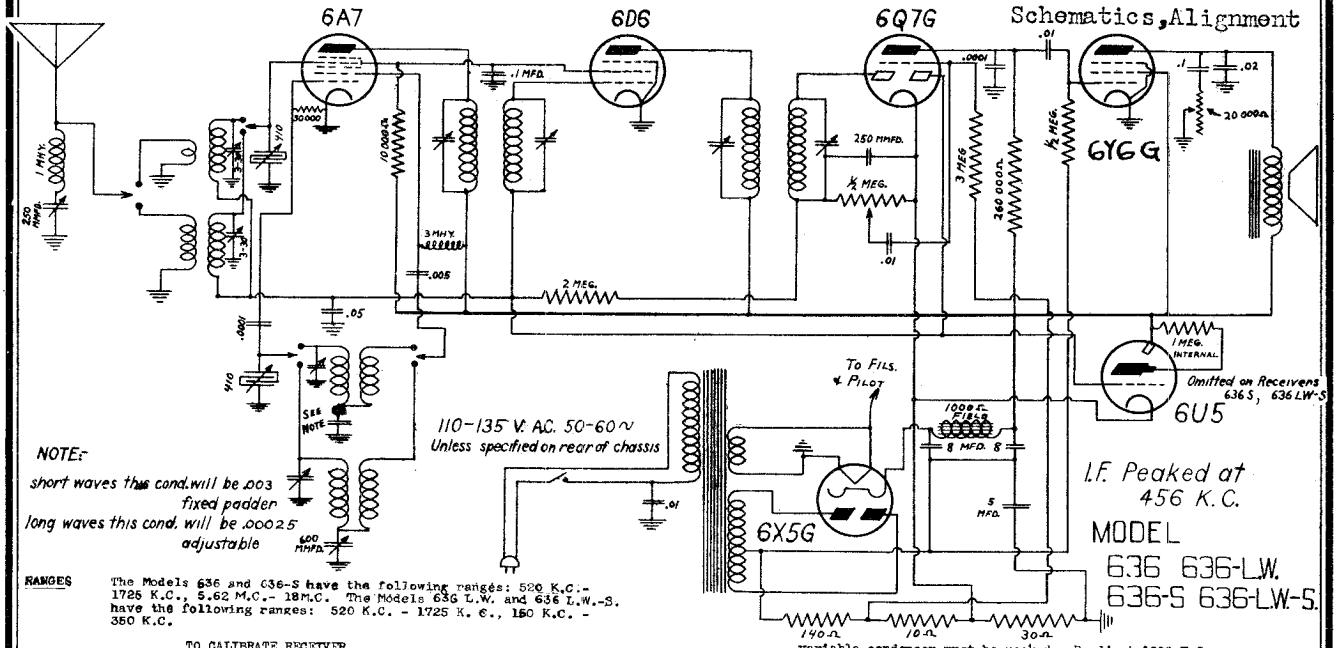

I.F. Peaked at 456 K.C.

MODEL
636 636-L.W.
636-S 636-L.W.-S.

RANGES The Models 636 and 636-S have the following ranges: 520 K.C.- 1725 K.C., 5.62 M.C.- 18M.C. The Models 636 L.W. and 636 L.W.-S. have the following ranges: 520 K.C. - 1725 K. C., 150 K.C. - 350 K.C.

TO CALIBRATE RECEIVER

I.F. ALIGNMENT Connect test oscillator to grid of 6A7 and chassis. Adjust test oscillator to 456 K.C. and peak I.F trimmers for maximum signal. Short circuit stator of front section of variable condenser during this operation. Then peak I.F. trimmers for maximum signal.

R.F. ALIGNMENT: Remove short from stator of variable condenser. Turn Wave Band Switch to connect test oscillator to antenna and B.C. chassis. Set test oscillator and radio dial to 1500 K.C. and peak two trimmers closest to center of chassis for maximum signal. Set test oscillator at 600 K.C. and adjust boradcast padder condenser in front of chassis for maximum signal. During this operation, the variable condenser must be rocked. Readjust 1500 K.C.

SHORT WAVE ALIGNMENT. Turn Wave Band switch to short wave. Set test oscillator and radio dial to 17 Megacycles and peak trimmers toward front of chassis for maximum signal. Low frequency setting is automatically taken care of by short wave coils which are carefully matched for this setting by a fixed calibrated padder.

LONG WAVE ALIGNMENT Turn Wave Band switch to Long Wave position. Adjust oscillator and receiver to 300 K.C. and peak the trimmers toward front of chassis for maximum signal. Then adjust oscillator and receiver to 175 K.C. and adjust long wave padder for maximum signal. The variable condenser should be rocked during this operation. Readjust 350 K.C.

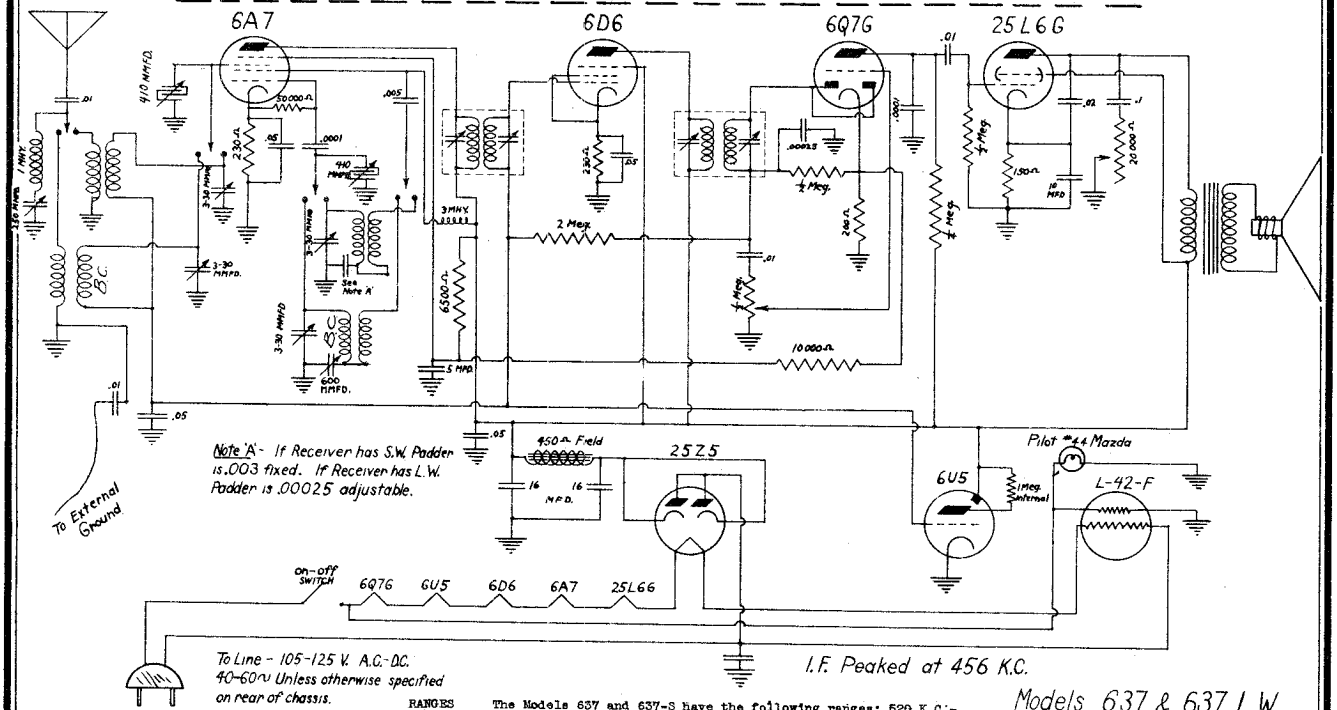

Note 'A' - If Receiver has S.W. Padder is .003 fixed. If Receiver has L.W. Padder is .00025 adjustable.

I.F. Peaked at 456 K.C.

Models 637 & 637 L.W.
Models 637-S & 637 L.W.-S
Have no 6U5

RANGES The Models 637 and 637-S have the following ranges: 520 K.C.- 1725 K.C., 5.62 M.C.- 18M.C. The Models 637 L.W. and 637 L.W.-S. have the following ranges: 520 K.C. - 1725 K. C., 150 K.C. - 350 K.C.

TO CALIBRATE RECEIVER

I.F. ALIGNMENT Connect test oscillator to grid of 6A7 and chassis. Adjust test oscillator to 456 K.C. and peak I.F trimmers for maximum signal. Short circuit stator of front section of variable condenser during this operation. Then peak I.F. trimmers for maximum signal.

R.F. ALIGNMENT: Remove short from stator of variable condenser. Turn Wave Band Switch to connect test oscillator to antenna and B.C. chassis. Set test oscillator and radio dial to 1500 K.C. and peak two trimmers closest to center of chassis for maximum signal. Set test oscillator at 600 K.C. and adjust boradcast padder condenser in front of chassis for maximum signal. During this operation, the variable condenser must be rocked. Readjust 1500 K.C.

SHORT WAVE ALIGNMENT. Turn Wave Band switch to short wave. Set test oscillator and radio dial to 17 Megacycles and peak trimmers toward front of chassis for maximum signal. Low frequency setting is automatically taken care of by short wave coils which are carefully matched for this setting by a fixed calibrated padder.

LONG WAVE ALIGNMENT Turn Wave Band switch to Long Wave position. Adjust oscillator and receiver to 300 K.C. and peak the trimmers toward front of chassis for maximum signal. Then adjust oscillator and receiver to 175 K.C. and adjust long wave padder for maximum signal. The variable condenser should be rocked during this operation. Readjust 350 K.C.

©John F. Rider, Publisher

MODELS 645,645LW,652
Schematic,Alignment

DEWALD RADIO

These models are superheterodyne receivers, with full automatic volume control on all bands. They have been designed to operate on 110-125 volts, 40-60 cycles AC or DC unless otherwise specified. A slide rule instrument type dial which simplifies tuning is featured in these receivers. The ranges of the models are as follows: ⟶

MODEL	RANGE COVERAGE		
645	555-174 meters 540-1725 K.C.	50-16 meters 6.0-18.5 M.C.	
645 L.W.	555-174 meters 540-1725 K.C.	2000-750 meters 150-400 K.C.	
652	555-174 meters 540-1725 K.C.	50-16 meters 6.0-18.5 M.C.	2000-750 meters 150-4000 K.C.

TO CALIBRATE RECEIVER

I.F. ALIGNMENT Connect antenna lead of the signal generator to antenna lead of receiver and ground lead of generator to receiver chassis. Short circuit front section of variable condenser. Adjust generator to 456 K.C. and peak I.F. trimmers for maximum signal.

BROADCAST ALIGNMENT Remove short from variable condenser. Have vave band switch on broadcast position. Adjust generator and receiver to 1500 K.C. Peak trimmers for maximum signal. Adjust generator and receiver to 600 K.C., peak the broadcast padder for maximum signal. The variable condenser should be "rocked" during this operation.

SHORT WAVE ALIGNMENT Turn wave band switch to the short wave band. Adjust generator and receiver to 16.0 M.C. Peak trimmers for maximum signal. The low frequency is automatically adjusted by a fixed calibrated padder.

LONG WAVE ALIGNMENT Turn wave band switch to Long Wave band. Adjust the generator and receiver to 300 K.C. and peak trimmers for maximum signal. Adjust generator and receiver to 175 K.C. and peak Long Wave padder for maximum signal. The variable condenser should be "rocked" during this operation. Recheck 300 K.C.

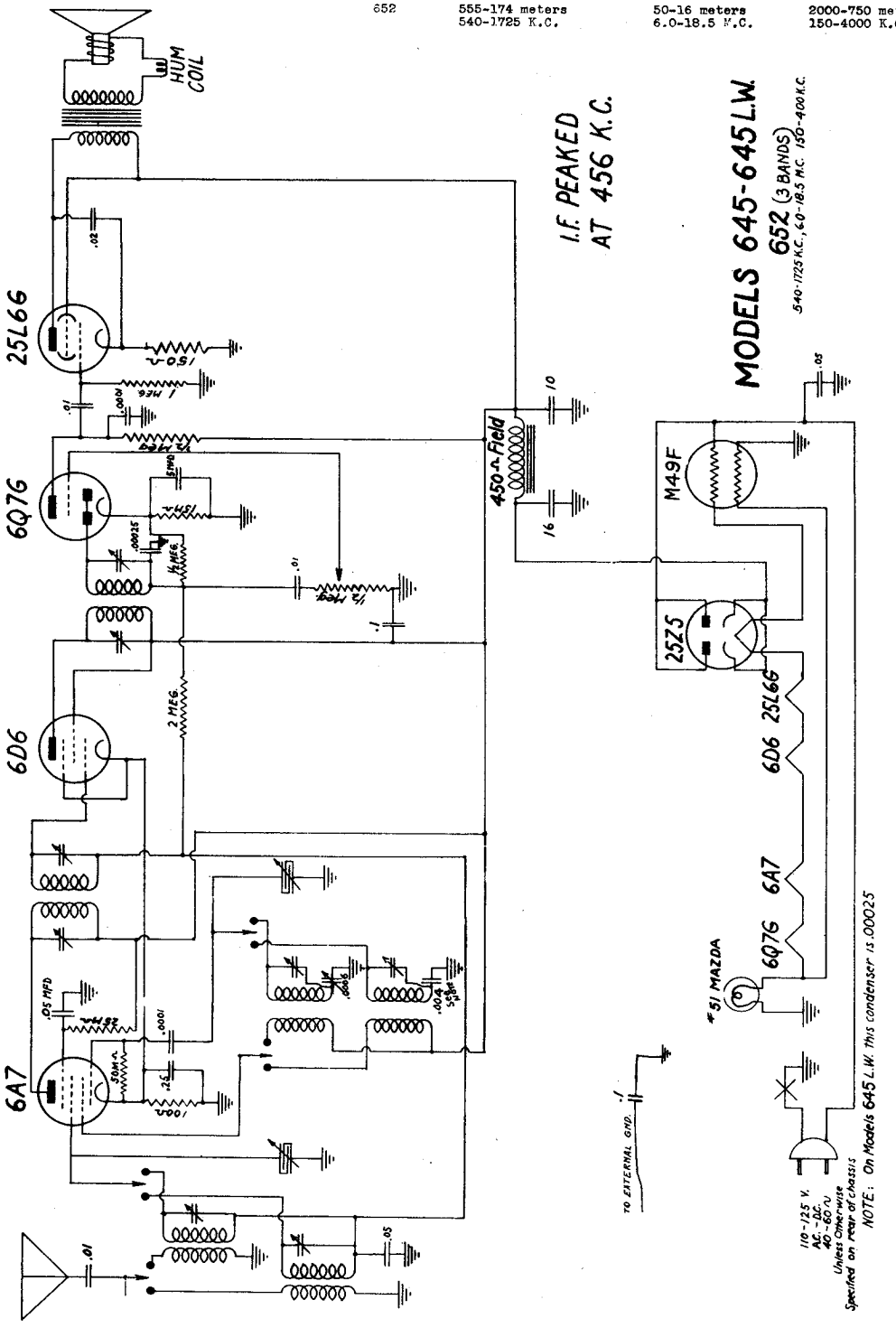

©John F. Rider, Publisher

DEWALD RADIO

MODELS 648, 648LW
650, 650LW
Schematic, Tuner
Alignment

TO CALIBRATE RECEIVER

L.F. ALIGNMENT — Connect antenna lead of the signal generator to antenna lead of receiver and ground lead of generator to receiver chassis. Short circuit front section of variable condenser. Adjust generator to 456 K.C. and peak I.F. trimmers for maximum signal.

BROADCAST ALIGNMENT — Remove short from variable condenser. Have wave band switch on broadcast position. Adjust generator and receiver to 1500 K.C. Peak trimmers for maximum signal. Adjust generator and receiver to 600 K.C., peak the broadcast padder for maximum signal. The variable condenser should be "rocked" during this operation.

SHORT WAVE ALIGNMENT — For 2.7-8.2 M.C. (Model 650). Turn wave band switch to this band. Adjust the generator and receiver to 7.0 M.C. and peak trimmers for maximum signal. The low frequency is automatically adjusted by a fixed calibrated padder.

For 7.8-24.0 M.C. (Model 650) Turn wave band switch to this band. Adjust the generator and receiver to 22.0 M.C. and peak trimmers for maximum signal. The low frequency is automatically adjusted by a fixed calibrated padder.

For 6.0-18.5 M.C. (Model 648). Turn wave band switch to this band. Adjust the generator and receiver to 16.0 M.C. and peak trimmers for maximum signal. The low frequency is automatically adjusted by a fixed calibrated padder.

LONG WAVE ALIGNMENT — (Model 648 L W.) Turn wave band switch to Long Wave band. Adjust the generator and receiver to 300 K.C. and peak trimmers for maximum signal. Adjust generator and receiver to 175 K.C. and peak Long Wave padder for maximum signal. The variable condenser should be "rocked" during this operation. Recheck 300 K.C.

MODEL	RANGE COVERAGE		
648	555-174 meters, 540-1725 K.C.,	50-16 meters 6.0-18.5 M.C.	
648 L.W	555-174 meters, 540-1725 K.C.	50-16 meters, 6.0-18.5 M.C.	2000-750 meters 150-400 K.C.
650	555-174 meters, 540-1725 K.C.	112-37 meters, 2.7-8.2 M.C.	38-12.5 meters 7.8-24.0 M.C.

HOW TO ADJUST THE PUSH-BUTTONS

Tune in the desired station with the station selector knob. Determine which button is to be used to receive this station. Loosen this button by turning it in a counterclockwise direction approximately one full turn. Then push the button in as far as it will go and tighten with a coin in the button slot. The adjustment may be checked by setting the pointer in any position, pushing the button in as far as it will go and noting if the intended station is received. After all adjustments have been made the station tabs and celluloids may be put on the buttons.

©John F. Rider, Publisher

MODELS 1002,1003
Schematic, Alignment
Parts

DEWALD RADIO

PRICES SUBJECT TO CHANGE WITHOUT NOTICE

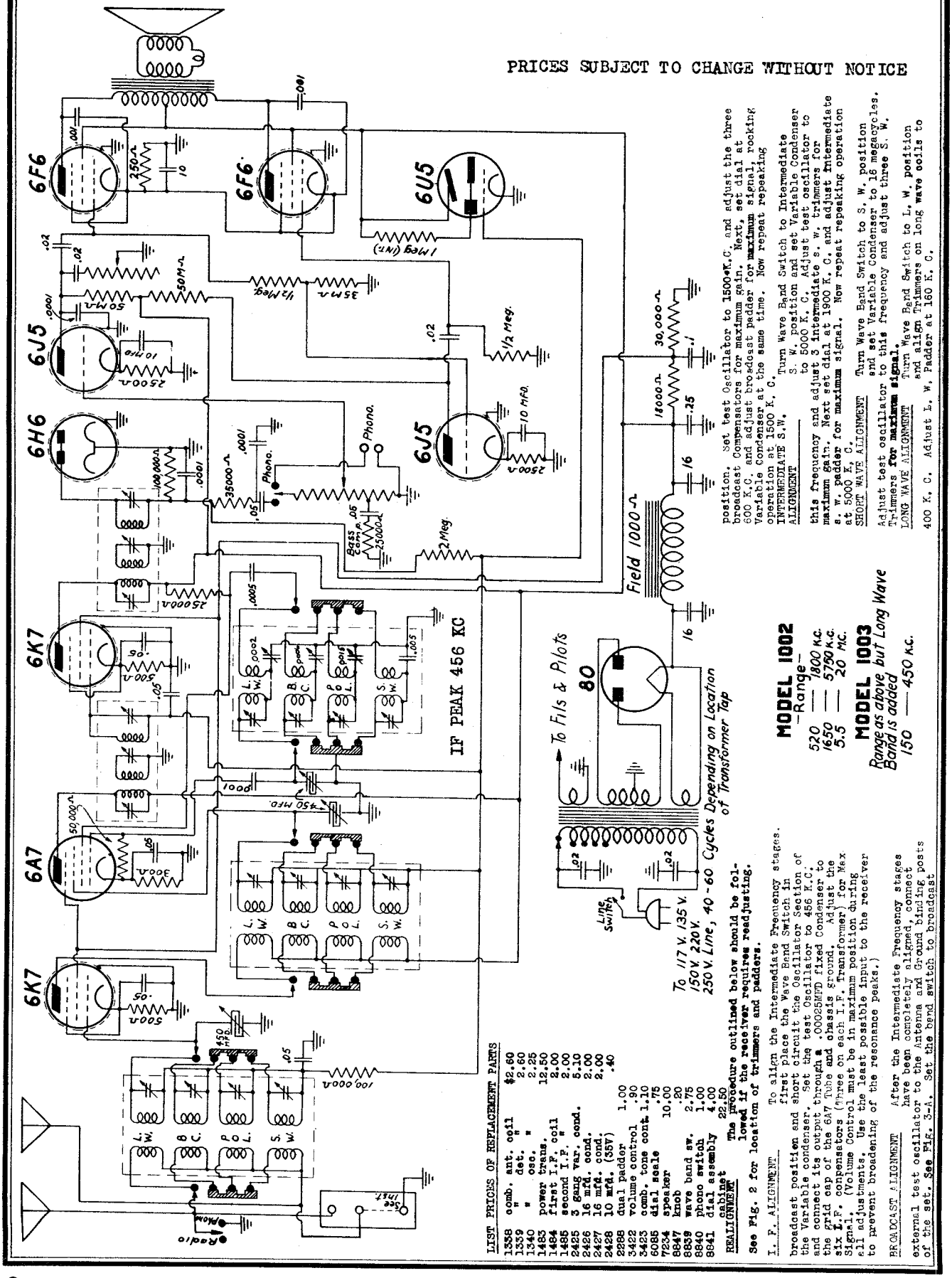

LIST PRICES OF REPLACEMENT PARTS

1338	comb. ant. coil	$2.60
1339	" det. "	2.60
1340	" osc. "	2.25
1483	power trans.	12.50
1484	first I.F. coil	2.00
1485	second I.F. "	2.00
2425	3 gang var. cond.	5.10
2426	16 mfd. cond.	2.00
2427	16 mfd. cond.	2.00
2428	10 mfd. (35V)	.40
2288	dual padder	1.00
3422	volume control	.90
3423	comb. tone cont.	1.10
6085	dial scale	.75
7234	speaker	10.00
8847	knob	.20
8839	wave band sw.	2.75
8840	phono switch	1.00
8841	dial assembly	4.00
	cabinet	22.50

REALIGNMENT The procedure outlined below should be followed if the receiver requires readjusting.

See Fig. 2 for location of trimmers and padders.

I. F. ALIGNMENT To align the Intermediate Frequency stages, first place the Wave Band Switch in broadcast position and short circuit the Oscillator Section of the Variable condenser. Set the test Oscillator to 456 K.C. and connect its output through a .0002MFD fixed Condenser to the grid cap of the 6A7 Tube and chassis ground. Adjust the six I.F. compensators (three on each I.F. Transformer) for Max Signal. (Volume Control must be in maximum position during all adjustments. Use the least possible input to the receiver to prevent broadening of the resonance peaks.)

BROADCAST ALIGNMENT After the Intermediate Frequency stages have been completely aligned, connect external test oscillator to the Antenna and Ground binding posts of the set. See Fig. 3-A. Set the band switch to broadcast position, Set test Oscillator to 1500 K.C. and adjust the three broadcast Compensators for maximum gain. Next, set dial at 600 K.C. and adjust broadcast padder for maximum signal, rocking Variable Condenser at the same time. Now repeat repeaking operation at 1500 K. C.

INTERMEDIATE ALIGNMENT S.W. Turn Wave Band Switch to Intermediate S. W. position and set Variable Condenser to 5000 K. C. Adjust test oscillator to this frequency and adjust 3 intermediate s. w. trimmers for maximum gain. Next set dial at 1900 K. C. and adjust Intermediate s. w. padder for maximum signal. Now repeat repeaking operation at 5000 K. C.

SHORT WAVE ALIGNMENT Turn Wave Band Switch to S. W. position and set Variable Condenser to 16 megacycles. Adjust test oscillator to this frequency and adjust three S. W. Trimmers for maximum signal.

LONG WAVE ALIGNMENT Turn Wave Band Switch to L. W. position and align Trimmers on long wave coils to 400 K. C. Adjust L. W. Padder at 160 K. C.

©John F. Rider, Publisher

DEWALD RADIO

MODELS 701, 701LW
Schematic, Tuner
Alignment

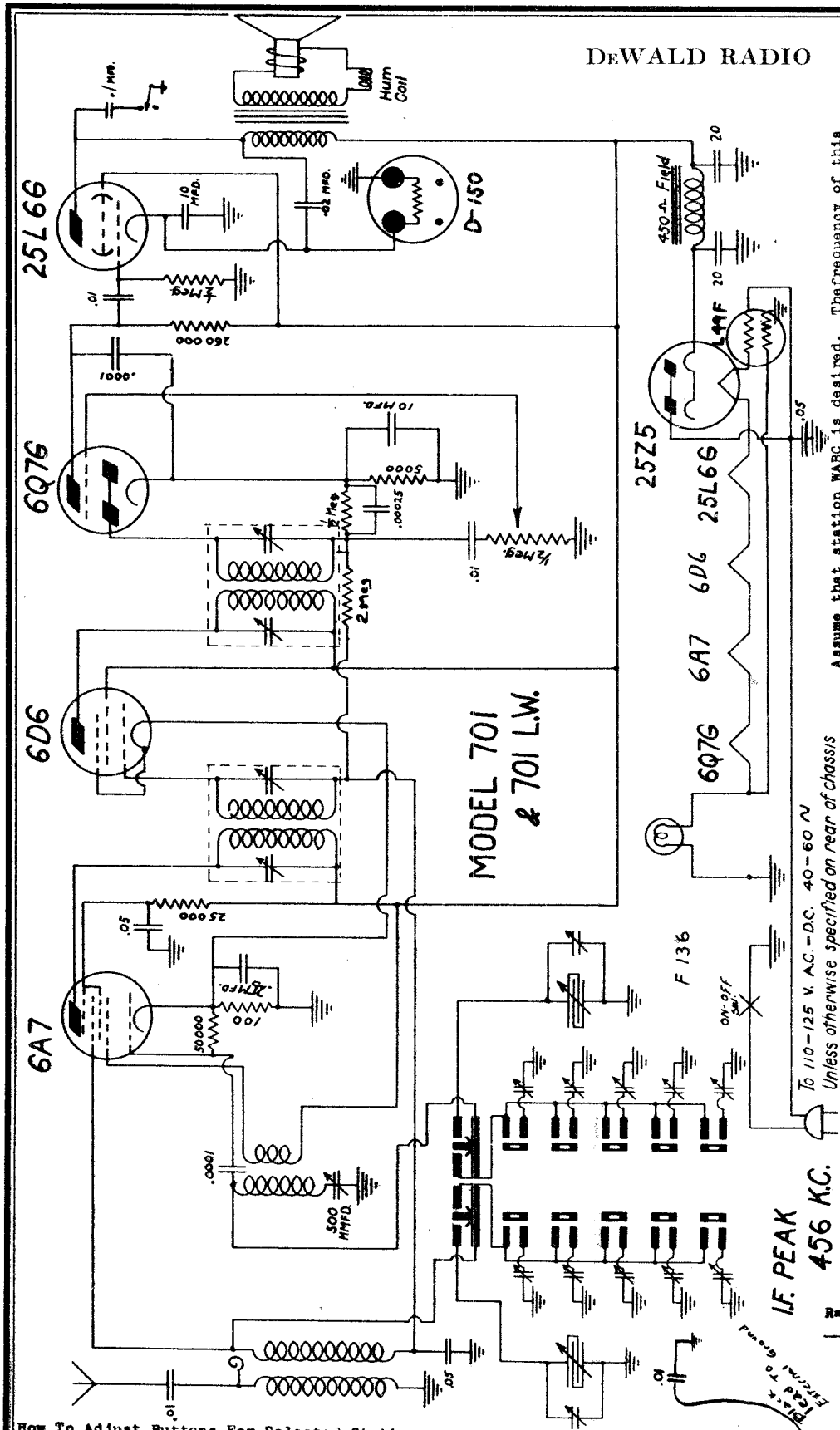

Assume that station WABC is desired. The frequency of this station is 860 kilocycles or 349 meters. By consulting the table it will be seen that this station lies between 550 to 900 kilocycles (548 to 333 meters) or 650 to 1050 kilocycles (462 to 286 meters). Therefore this station can be tuned in by using number 3 or 4 adjusting condensers, and pressing the proper button. Note the program on WABC at that instant, press in the 3rd knob from the top, and adjust the osc. cond. number 3 until the WABC program is heard. Then adjust the det. cond. number 3 until the station is received with the greatest possible volume. All the stations may be adjusted in like manner.

After an elapse of 24 hours, from initial adjusting, it is necessary to recheck all adjusting condensers to see if any of them have shifted. After this rechecking no further adjusting should be necessary.

Select five stations and determine in what frequency range each one will lie, by consulting the adjust table. Press the button corresponding to this frequency range and adjust the corresponding "osc. cond." until the desired station is heard. Then adjust the corresponding "det. cond" until the station comes in with the greatest possible strength. It is advisable to tune in the station with the antenna wire disconnected from the receiver and holding the end of the red lead in the hand. The volume of the receiver should be turned lower as the station comes in louder. Since several stations will be heard while tuning in the desired station, it will help a great deal to know the program coming from the desired station at that instant. This can be easily found by pressing the lowest button and using the tuning knob to pick up that station.

Range in Meter
577-410
577-410
548-333
462-286
300-171

CONVENTIONAL ALIGNMENT, SEE SPECIAL SECTION VOL. VIII

How To Adjust Buttons For Selected Stations:

On the rear of the chassis there is a label marked with two rows of numbers from 1 to 5 with an adjusting condenser next to each number. Two of these condensers having the corresponding numbers must be adjusted to receive any one station. The frequency range of the adjusting condensers are as follows:

Det adj. Condenser		Osc. Adj. Condenser	Range in K.C.		Corresponding Switch Button
1	——	1	520-730	——	Top
2	——	2	520-730	——	2nd from Top
3	——	3	550-900	——	3rd " "
4	——	4	650-1050	——	4th " "
5	——	5	1000-1750	——	5th " "

©John F. Rider, Publisher

MODEL 807
MODEL 1201
Schematics, Alignment

DEWALD RADIO

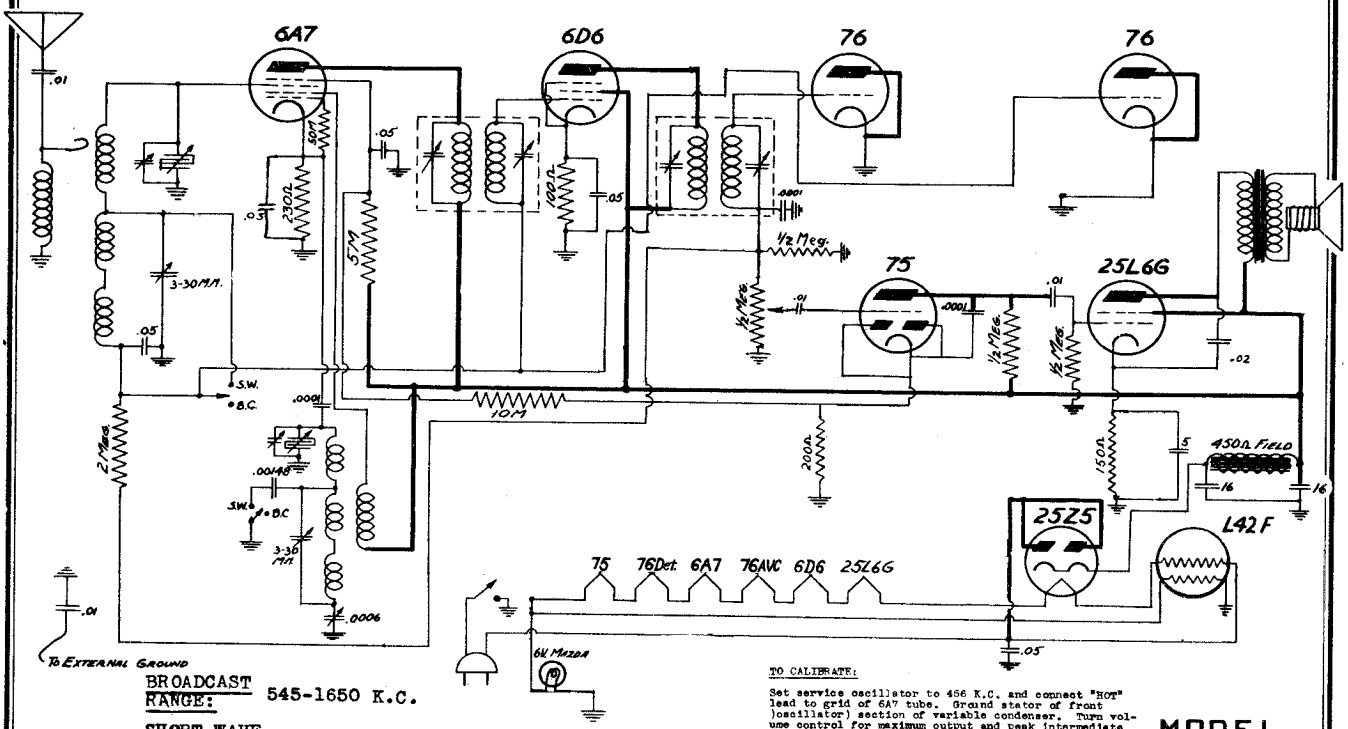

BROADCAST RANGE: 545-1650 K.C.

SHORT WAVE RANGE: 7.5 to 2.15 Megacycles

This receiver is designed to operate on 115 Volts AC 40-60 cycles and DC. The current consumption is 40 watts.

TO CALIBRATE:

Set service oscillator to 456 K.C. and connect "HOT" lead to grid of 6A7 tube. Ground stator of front)oscillator) section of variable condenser. Turn volume control for maximum output and peak intermediate frequency trimmers for maximum gain. Turn wave band switch knob toward right. Adjust service oscillator and receiver to 7 megacycles and peak variable condenser trimmers for maximum gain. Turn wave band switch toward left and adjust oscillator (service) and receiver to 1500 K.C. Peak both trimmers underneath chassis for maximum gain. Then adjust service oscillator and receiver to 600 K.C. and "rock" the variable condenser and adjust the padder (near front of chassis on top at the same time for maximum gain.

MODEL 807

IF PEAK 456 KC.

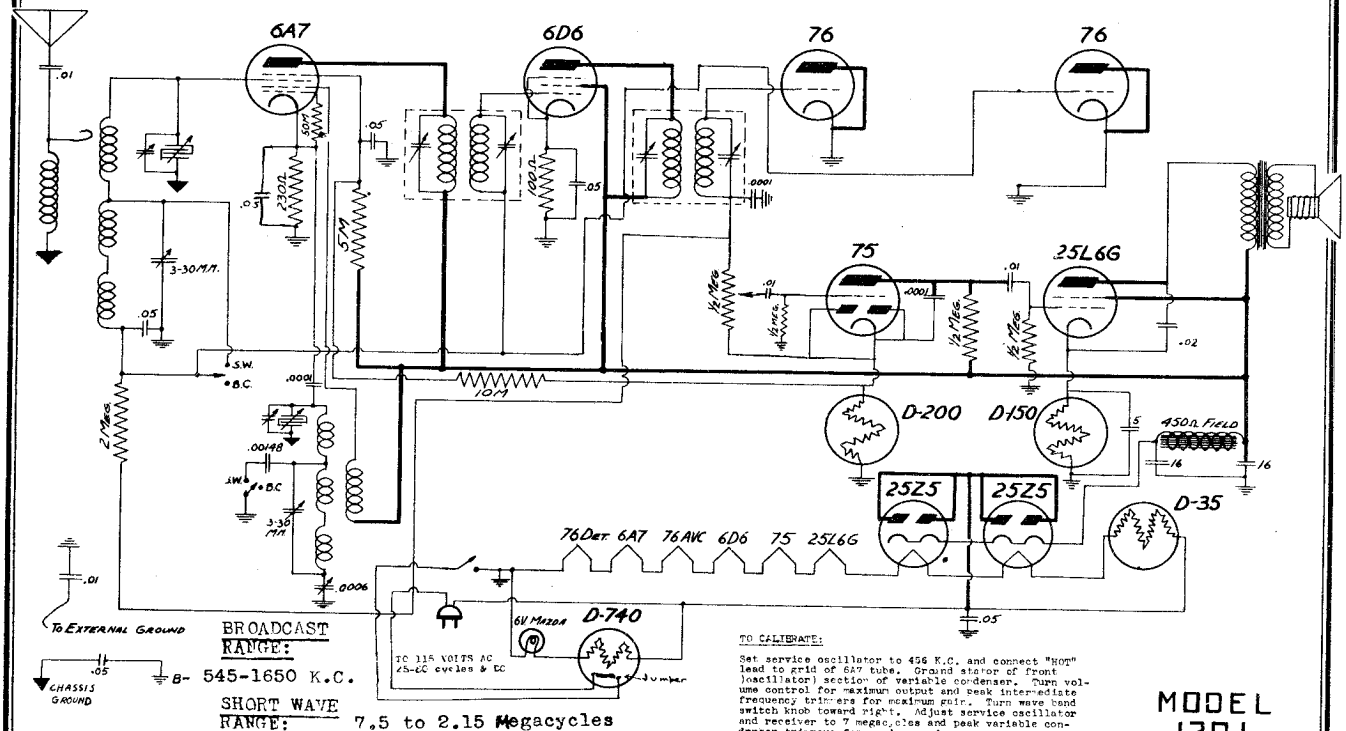

BROADCAST RANGE: 545-1650 K.C.

SHORT WAVE RANGE: 7.5 to 2.15 Megacycles

This receiver is designed to operate on 115 Volts AC 25-60 cycles and DC. The current consumption is 65 watts.

TO CALIBRATE:

Set service oscillator to 456 K.C. and connect "HOT" lead to grid of 6A7 tube. Ground stator of front)oscillator) section of variable condenser. Turn volume control for maximum output and peak intermediate frequency trimmers for maximum gain. Turn wave band switch knob toward right. Adjust service oscillator and receiver to 7 megacycles and peak variable condenser trimmers for maximum gain. Turn wave band switch toward left and adjust oscillator (service) and receiver to 1500 K.C. Peak both trimmers underneath chassis for maximum gain. Then adjust service oscillator and receiver to 600 K.C. and "rock" the variable condenser and adjust the padder (near front of chassis on top at the same time for maximum gain.

MODEL 1201

©John F. Rider, Publisher

DEWALD RADIO

MODELS 649, 649LW
651, 651LW
Schematic, Tuner
Alignment

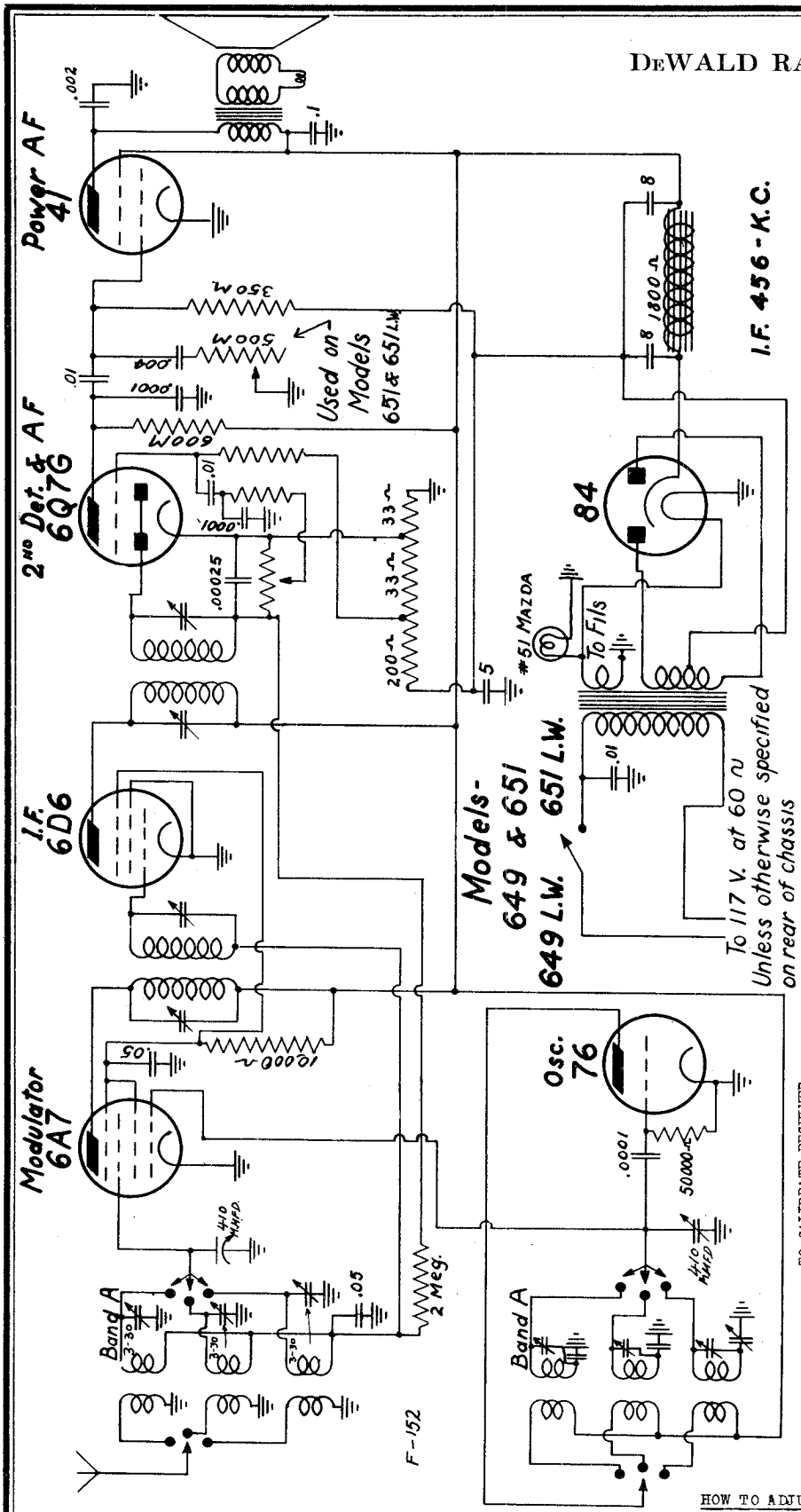

TO CALIBRATE RECEIVER

I.F. ALIGNMENT

Connect antenna lead of the signal generator to antenna lead of receiver and ground lead of generator to receiver chassis. Short circuit front section of variable condenser. Adjust generator to 456 K.C. and peak I.F. trimmers for maximum signal.

BROADCAST ALIGNMENT

Remove short from variable condenser. Have wave band switch on broadcast position. Adjust generator and receiver to 1500 K.C. Peak trimmers for maximum signal. Adjust generator and receiver to 600 K.C., peak the broadcast padder for maximum signal. The variable condenser should be "rocked" during this operation.

SHORT WAVE ALIGNMENT

For 2.7-8.2 M.C. (Model 651). Turn wave band switch to this band. Adjust the generator and receiver to 7.0 M.C. and peak trimmers for maximum signal. The low frequency is automatically adjusted by a fixed calibrated padder.
For 7.8-24.0 M.C. (Model 651) Turn wave band switch to this band. Adjust the generator and receiver to 22.0 M.C. and peak trimmers for maximum signal. The low frequency is automatically adjusted by a fixed calibrated padder.
For 6.0-18.5 M.C. (Model 649) Turn wave band switch to this band. Adjust the generator and receiver to 16.0 M.C. and peak trimmers for maximum signal. The low frequency is automatically adjusted by a fixed calibrated padder.

LONG WAVE ALIGNMENT

(Model 649 L.W.) Turn wave band switch to long wave band. Adjust the generator and receiver to 300 K.C. and peak trimmers for maximum signal. Adjust generator and receiver to 175 K.C. and peak Long Wave padder for maximum signal. The variable condenser should be "rocked" during this operation. Recheck 300 K.C.

MODEL	RANGE COVERAGE	
649	555-174 meters, 50-16 meters	
	540-1725 K.C., 6.0-18.5 M.C.	
649 L.W.	555-174 meters, 50-16 meters,	2000-756 meters
	540-1725 K.C. 6.0-18.5 M.C.	150-400 K.C.
651	555-174 meters, 112-37 meters.	39-12.5 meters
	540-1725 K.C. 2.7-8.2 M.C.	7.8-24.0 M.C.

HOW TO ADJUST THE PUSH-BUTTONS

Note: On Model 649 Band A is omitted.

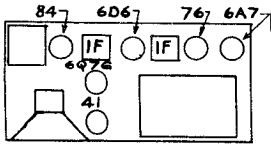

Tune in the desired station with the station selector knob. Determine which button is to be used to receive this station. Loosen this button by turning it in a counterclockwise direction approximately one full turn. Then push the button in as far as it will go and tighten with the button slot. The adjustment may be checked by setting the pointer in any position, pushing the button in as far as it will go and noting if the intended station is received. After all adjustments have been made the station tabs and celluloids may be put on the buttons.

©John F. Rider, Publisher

MODELS 1104,1105
Schematic, Socket
Trimmers

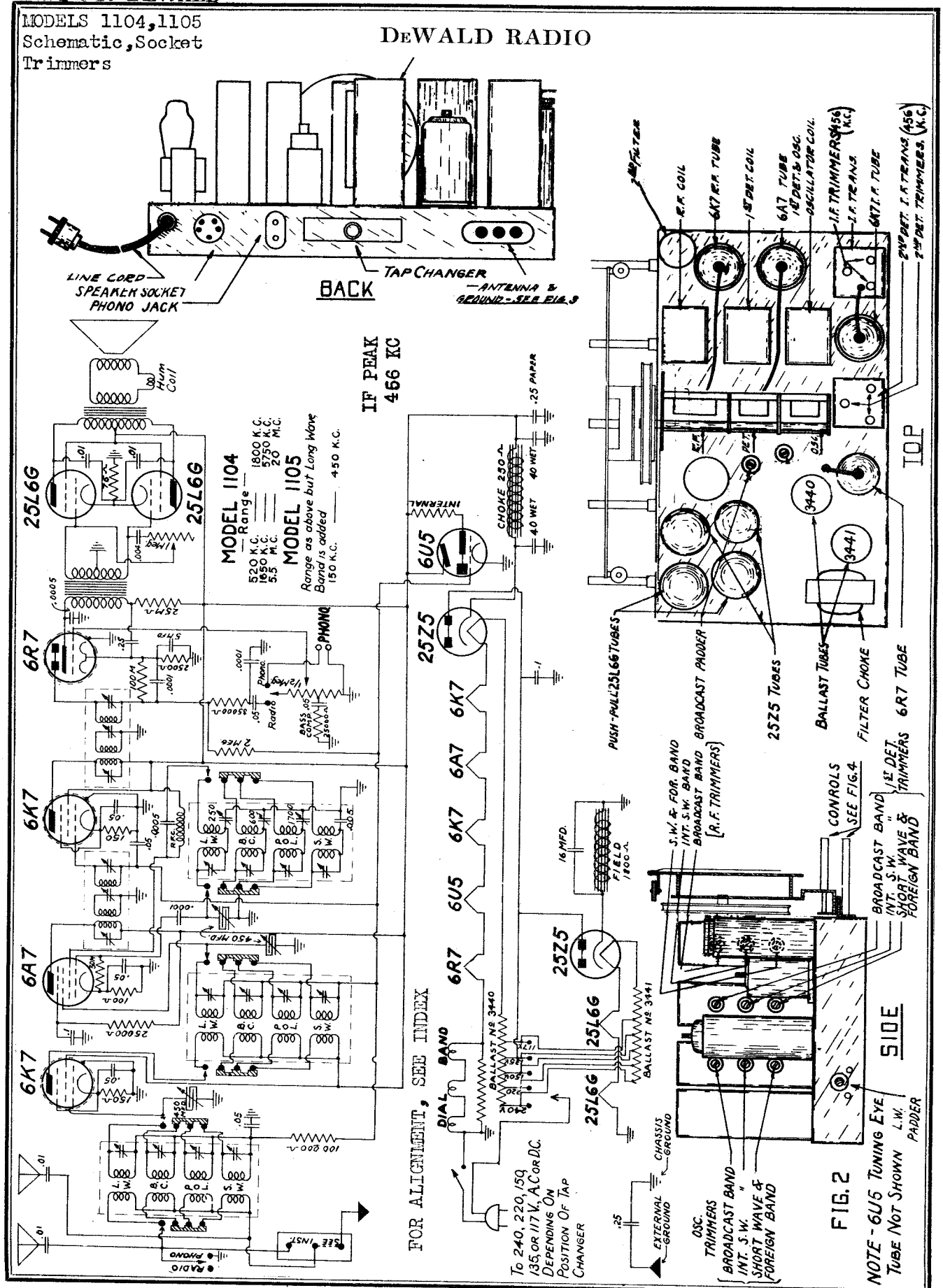

©John F. Rider, Publisher

©John F. Rider, Publisher

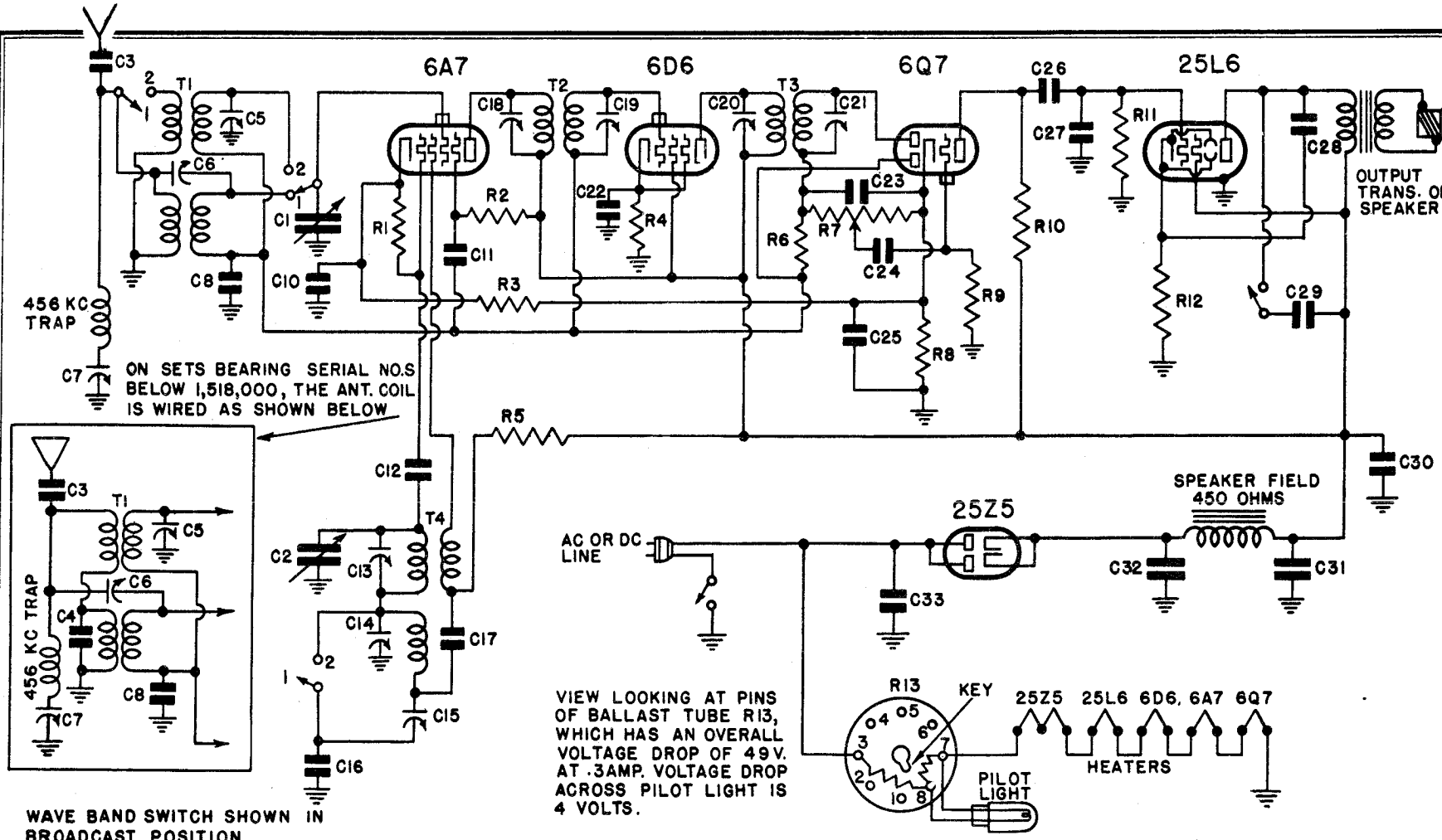

I-F* PEAKED AT 456 KC

6 TUBE AC DC RECEIVER

VOLTAGE ANALYSIS

Readings should be taken with a 1000 ohms-per-volt meter. Voltages listed below are from point indicated to ground (chassis) with the volume control turned on full and no signal. All readings except cathode and heater voltages were taken on 250 volt scale. Line voltage for these readings was 117.5 volts, 60 cycles, a.c.

Tube	*Plate*	*Screen*	*Cathode*	*Osc. Plate*	*Fil.*
6A7	96	45	2.3	74	6.3
6D6	96	96	4.5	—	6.3
6Q7	40	—	1.0	—	6.3
25L6	92	100	6.2	—	25.0

Voltage at 25Z5 cathode—125 volts.
Voltage across speaker field—29 volts.
Voltage drop across ballast tube (pins Nos. 3, 7)—49 volts.
Voltage drop across pilot light section (pins Nos. 8, 7)—4 volts.

Tube Data

The tube complement is as follows:

1—6A7 pentagrid oscillator-modulator.
1—6D6 first i-f amplifier.
1—6Q7 diode detector, a-f amplifier, a.v.c.
1—25L6 beam power output.
1—25Z5 dual half-wave rectifier.
1—2UR-224 ballast tube (R13 on schematic).

©John F. Rider, Publisher

REPLACEMENT PARTS LIST

List Price Ea. Effective as of Feb. 15th, 1938 (Subject to change without notice)

*Item	Part No.	DESCRIPTION	PRICE
T1, L1	4RT-418	Two-band antenna coil	$1.75
T2	4VT-420A	456 kc first i-f transformer	1.25
T3	4VT-421A	456 kc second i-f transformer	1.25
T4	3CT-290A	Two-band oscillator coil	1.35
R1	KR-53	50,000 ohm ¼ watt carbon resistor	.16
R2	ZZR-196	30,000 ohm ¼ watt carbon resistor	.16
R3	3RR-276	310 ohm ½ watt wire-wound resistor	.16
R4	3CR-295	410 ohm ½ watt wire-wound resistor	.16
R5	LR-65	10,000 ohm ¼ watt carbon resistor	.16
R6, R9	HR-42	2 megohm ¼ watt carbon resistor	.16
R7	3FR-256B	Volume control, 500,000 ohms, with line switch	1.00
R8	3CR-294	240 ohm ½ watt wire-wound resistor	.16
R10	KR-55	250,000 ohm ¼ watt carbon resistor	.16
R11	KR-56	500,000 ohm ¼ watt carbon resistor	.16
R12	3FR-293	140 ohm ½ watt wire-wound resistor	.16
R13	2UR-224	Plug-in ballast tube	.80
C1, C2	4VC-369	Two-gang variable condenser (see changes)	4.15
C3	NNC-199	0.001 mf, 600 volt tubular condenser	.20
C4, C12	AAC-106A	0.00005 mf mica condenser	.20
†C5, C6, C7		Trimmers; part of antenna coil assembly.	
C8, C29	BC-12	0.05 mf, 200 volt tubular condenser	.20
C10, C22, C25, C30	AC-6	0.1 mf, 200 volt tubular condenser	.20
C11	KC-59	0.006 mf, 400 volt tubular condenser	.20
†C13, C14		Trimmers; part of oscillator coil assembly.	
C15	2NC-231	Adjustable padding condenser. Range 300-600 mmf	.50
C16	3EC-267	0.0042 mf mica condenser	.40
C17, C24	KC-58	0.01 mf, 400 volt tubular condenser	.20
C18, C19		Trimmers; part of first i-f transformer.	
C20, C21		Trimmers; part of second i-f transformer.	
C23, C27	5AC-384	0.0002 mf, 600 volt tubular condenser	.20
C26, C28	LC-65	0.02 mf, 400 volt tubular condenser	.20
C31	3CC-337	40 mf, 150 volt wet electrolytic condenser	.90
C32	3CC-261	20 mf, 150 volt wet electrolytic condenser	.90
C33	2VC-242A	0.1 mf, 400 volt molded condenser	.20
	3CS-254	6½" dynamic speaker	5.25
	4BL-94	Pilot light, 6.3 volt, .25 amp. Mazda No. 44	.20
	4MS-316	Wave-band switch	.60
	3ES-256F	Tone control switch	.50
	5FZ-755	Dial face	.10
	4MZ-588	Dial pointer	.25
	3CZ-239	Idler pulley	.05
	3CZ-336A	Dial drive belt	.10
	3CZ-340	Idler spring	.05
	3CZ-341	Condenser shaft pulley	.10
	3CZ-337C	Drive shaft and pulley	.10
	3CZ-350	Escutcheon with crystal (131 and 169 cabinets)	1.05
	4MZ-644	Pyralin crystal (187 cabinet)	.50
	5FZ-758	Pyralin crystal (191 cabinet)	.45

When ordering replacement parts specify part number

*Item number locates the article on the schematic diagram.

†These trimmers are part of coil assemblies and cannot be supplied separately.

PRODUCTION CHANGES

In AM receivers bearing serial numbers below 1533750 and BF receivers bearing serial numbers below 1523000:
- (a) R6 and R9 were 1 megohm resistors, part no. KR-57.
- (b) R7 was a 250,000 ohm resistor, part no. 2NR-214C.
- (c) C23 and C27 were .00025 mf mica condensers, part no. AC-7A.
- (d) C24 was a .02 mf, 200 volt condenser, part no. FC-29.

In AM receivers bearing serial numbers below 1518000:
- (a) T1 was part no. 3CT-289A.
- (b) T2 was part no. 3CT-274.
- (c) T3 was part no. 3CT-275.
- (d) Wave-band switch was part no. TTS-111G.

In AM receivers bearing serial numbers below 1184290:
- (a) The variable condenser was part no. 3CC-275.
- (b) Dial pointer was part no. 4MZ-590.

In AM receivers bearing serial numbers between 1184290 and 1518000:
- (a) Variable condenser was part no. 3CC-275A.
- (b) Dial face was part no. 3CZ-514.

ADJUSTMENTS

An oscillator with frequencies of 456, 600, 1400 and 15,000 kc should be used.

In addition an output meter should be used across the voice coil or output transformer for observing maximum response.

The set's oscillator is higher in frequency than the signal, so images should be observed on the low frequency side of the signals.

Always choose the minimum capacity peak on oscillator trimmers and maximum capacity peaks on antenna trimmers. The last motion in adjusting trimmers should always be a tightening one, not a loosening one.

Always use as weak a test signal as possible during alignment.

Never leave a trimmer with the outside plate so loose that there is no tension on the screw. Either bend the plate up or remove the screw entirely.

Location of Coils and Trimmer Adjustments

The broadcast antenna coil, short-wave antenna coil, and 456 kc wave-trap are one assembly mounted underneath the chassis deck, to the right of the variable condenser. The trimmers for these coils are accessible through three holes in the top of the chassis. The trimmer closest to the front of the chassis is for the 456 kc wave-trap. The central trimmer is for the broadcast antenna coil, and the trimmer farthest from front is for short-wave antenna coil.

The broadcast oscillator and short-wave oscillator coils are wound on one form and mounted on the inside of the rear chassis wall. The trimmers for these coils are accessible through two holes in the rear chassis wall. The left-hand trimmer (looking at the rear wall) is for the short-wave oscillator coil and the right-hand trimmer is for the broadcast oscillator coil.

The two i-f transformers are in oblong coil cans located on the top of the chassis. The first i-f transformer is the one behind the variable condenser. The trimmers for these transformers are accessible through holes in the tops of the cans.

The broadcast series padding condenser is located on the top of the chassis, to the left of the variable condenser. The adjusting screw is reached through a hole in the top of the chassis.

I-f Transformer and Wave-Trap Alignment

Turn the switch clockwise to the broadcast position and rotate the variable condenser to the minimum capacity position. Feed 456 kc through a .02 mf condenser to the grid cap of 6A7 tube and adjust the four i-f trimmers for maximum response. Feed 456 kc through a .0002 mf condenser to the antenna and adjust the wave-trap trimmer (front screw beside variable condenser) for minimum response.

Short-Wave Alignment

Use a dummy antenna (400 ohm resistor) when aligning the short-wave coils.

Rotate the wave-band switch counter-clockwise to the short-wave position and set the dial pointer to 15 megacycles. Feed 15 megacycles through the dummy antenna and adjust the short-wave oscillator trimmer (left-hand screw on rear chassis wall) for maximum response and then adjust the short-wave antenna trimmer (rear screw beside variable condenser) for maximum response. The variable condenser should be rocked while adjusting the antenna trimmer. (Rotate variable condenser rotor shaft back and forth through a small arc).

Broadcast Alignment

Rotate the wave-band switch to the broadcast position, clockwise, and set the dial pointer at 60. Feed 600 kc through a standard dummy antenna (a .0002 mf condenser may be used as a substitute).

Adjust the broadcast series padding condenser (on rear chassis wall, below 6A7 tube) for maximum response. Move pointer to 140, feed 1400 kc and adjust the broadcast oscillator trimmer (right-hand screw on rear chassis wall) for maximum response and then adjust the broadcast antenna trimmer (central screw beside variable condenser) for maximum response. Return pointer to 60, feed 600 kc and readjust the series padding condenser, rocking the variable condenser for maximum response.

GENERAL NOTES

1. If replacements are made or the wiring disturbed in the r-f portion of the circuit, the receiver should be carefully re-aligned.
2. One side of the power line is directly grounded to the chassis base. Under no circumstances, therefore, should a ground wire be permitted to come in contact with any metal part of the receiver.
3. The filament dropping resistor (R13 on schematic) is in a special tube at the rear of the chassis. This tube will become quite hot under normal operating conditions. For voltage drop specifications, see below.
4. When operating the receiver on d.c. it may be necessary to reverse the line plug to obtain the correct polarity.
5. The two i-f transformers are held to the chassis by snap-on fasteners. To remove an i-f, unsolder all its leads under the chassis, pinch together the prongs of the snap-on fastener and lift the i-f can from the chassis.
6. The color coding of the i-f transformer leads is as follows:
   Grid—green — Plate—blue
   Grid return—black — B plus—red
7. An efficient antenna system is necessary to enable a full realization of the merits of the receiver. For reduction of noise and achievement of high efficiency on all frequency ranges the Emerson All-Wave High Fidelity Antenna, Model W-78, and the Emerson All-Wave Antenna System, Model W-89, are recommended. Instructions for the installation of these antennas are supplied with each kit.
   In congested areas where the installation of a large antenna is not desirable we recommend the use of the Emerson Flexible Mast Antenna, Model W-82. Instructions for the installation of this compact and efficient antenna are supplied with each kit.
8. The wave-trap in the receiver has been adjusted for maximum signal rejection at 456 kc. If, however, persistent interference is experienced from some particular telegraphic station, readjust the wave-trap trimmer until the response from the interfering station is at a minimum.

Voltage rating ..... 105-125 volts, a.c. or d.c.
Power consumption ..... 50 watts.
Frequency ranges ..... 540 to 1,730 kc, and 5.6 to 18.0 megacycles.

MODELS AH166,-171,-173
-174,-176,-179,-180,
Chassis AH -185
Schematics,Voltage

EMERSON RADIO & PHONO. CORP.

MODELS BG138,-140,
-146,-178,-182,-183
Chassis BG -142

MODELS AH-166, AH-171, AH-173, AH-174, AH-176, AH-179, AH-180 and AH-185

CHASSIS MODEL AH

A.C. Radio-Phonograph Combination

MODEL AH-166 (See Note No. 6)

CHASSIS MODEL AH

MODELS BG-138, BG-140, BG-142, BG-146, BG-178, BG-182, and BG-183

(Seven Tubes, Including Ballast Tube)

CHASSIS MODEL BG

Voltage rating ..... 105-125 volts.
Power consumption .. 50 watts for receiver. 20 watts for phonograph motor.
Frequency ranges .. 540 to 1,730 kc, and 2.2 to 7 megacycles.

VOLTAGE ANALYSIS

Readings should be taken with a 1000 ohms-per-volt meter. Voltages listed below are from point indicated to ground (chassis) with the volume control turned on full and no signal. Line voltage for these readings was 117.5 volts, 60 cycles, a.c. All readings except heaters and cathodes were taken on 250 volt scale.

MODEL AH

Tube	*Plate*	*Screen*	*Osc. Plate*	*Cathode*
6A7	103	60	85	2.2
6D6	103	103	—	*2.2
6Q7G	40	—	—	* 0
25L6G	90	103	—	6.5

Voltage at 25Z5 cathode—130 volts.
Voltage across field—27 volts.
Voltage drop across ballast tube (pins 3, 7)—49 volts.
Voltage drop across pilot light section (pins 7, 8)—4 volts.
*AH receivers bearing serial numbers below 1,711,701
Cathode 6D6—3.3 volts. Cathode 6Q7G—1 volt.

MODEL BG and AH-166

Plate	*Screen*	*Osc. Plate*	*Cathode*	*Heaters All Models*
115	65	95	2.4	6.3
115	115	—	2.4	6.3
45	—	—	0	6.3
108	115	—	7	25.

Voltage at 25Z5 cathode—126 volts.
Voltage across filter choke—11 volts.
Voltage drop across ballast tube (pins 3, 7)—42 volts.

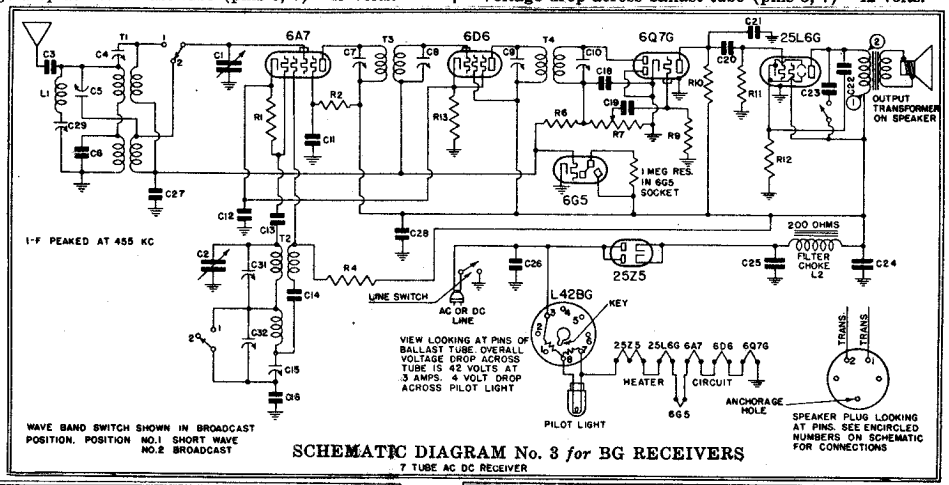

SCHEMATIC DIAGRAM No. 3 *for* BG RECEIVERS
7 TUBE AC DC RECEIVER

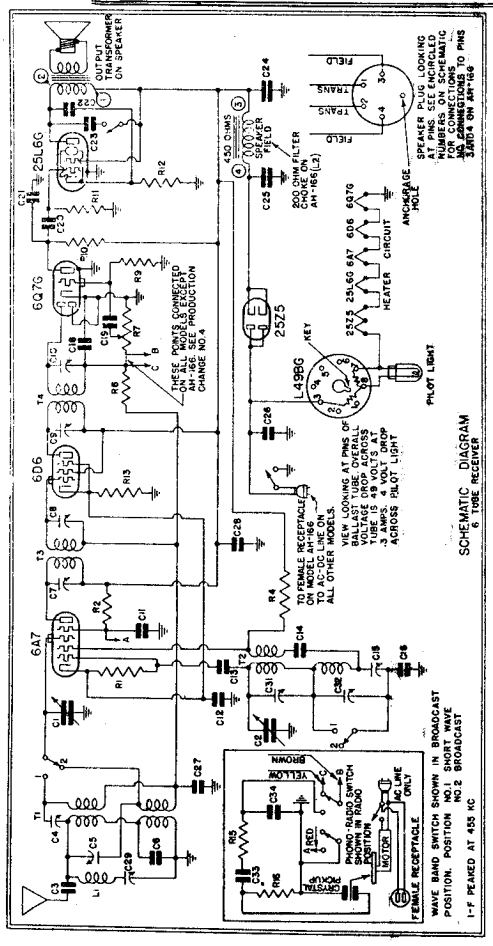

SCHEMATIC DIAGRAM No. 1 *for* AH RECEIVERS ABOVE SERIAL No. 1,711,701

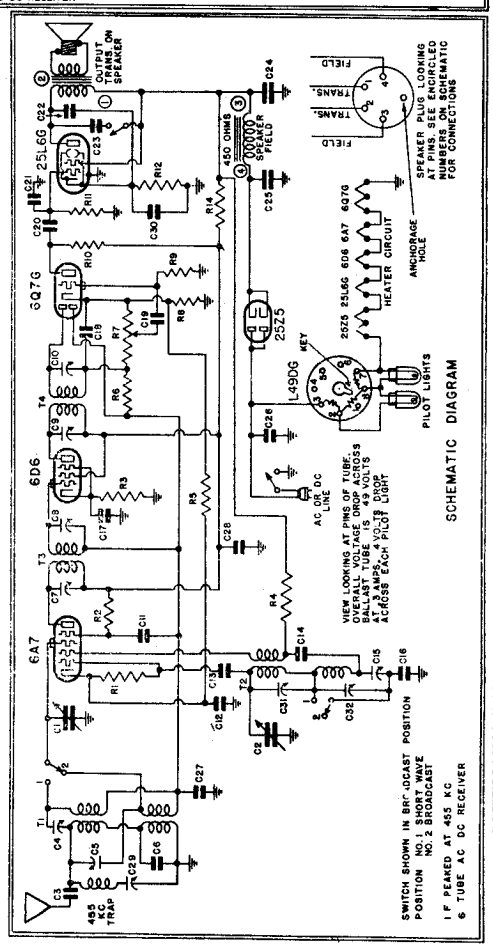

SCHEMATIC DIAGRAM No. 2 *for* AH RECEIVERS BELOW SERIAL No. 1,711,701

©John F. Rider, Publisher

GENERAL NOTES

1. If replacements are made or the wiring disturbed in the r-f portion of the circuit, the receiver should be carefully re-aligned.
2. One side of the power line is directly grounded to the chassis base. Under no circumstances, therefore, should a ground wire be permitted to come in contact with any metal part of the receiver.
3. The filament dropping resistor is in a special tube at the rear of the chassis. This tube will become quite hot under normal operating conditions. For voltage drop specifications, see below.
4. When operating the receiver on d.c. it may be necessary to reverse the line plug to obtain the correct polarity.
5. The wave-trap in the receiver has been adjusted for maximum signal rejection at 455 kc. If, however, persistent interference is experienced from some particular telegraphic station, readjust the wave-trap trimmer until the response from the interfering station is at a minimum.
6. The motor used in this combination is of the a.c. self-starting type and will operate on ALTERNATING CURRENT ONLY. To avoid damaging the motor the combination should never be used on direct current.

PRODUCTION CHANGES

1. In AH receivers bearing serial numbers below 1,102,142, C11 was .01 mf, 400 volt condenser.
2. In AH receivers bearing serial numbers below 1,149,148, C22 was connected from plate to B plus.
3. AH receivers bearing serial numbers below 1,711,701 differ from parts list as follows:

	Item	Was Part No.	DESCRIPTION	
(a)	T3	4ET-350A	First i-f transformer 455 kc	$1.15
(b)	R7	3ZR-288	.5 megohm volume control with line switch	1.00
(c)	R9	KR-57	1 megohm ¼ watt carbon resistor	.16
(d)	R6	HR-42	2 megohm ¼ watt carbon resistor	.16
(e)	Ballast	L49-DG	Ballast tube (for 2 dial lights)	.55
(f)	C1, C2	4HC-343	Two-gang variable condenser	3.35
(g)	C11	3HC-274	0.002 mf, 600 volt tubular condenser	.20
(h)	C12	AC-6	0.1 mf, 200 volt tubular condenser	.20
(j)	C13	AAC-106A	0.00005 mf mica condenser	.20
(k)	C19	FC-29	0.02 mf, 200 volt tubular condenser	.20
(l)	C21	AC-7A	0.00025 mf mica condenser	.20
(m)	C23	EC-23	0.03 mf, 400 volt tubular condenser	.20
(p)	C27	BC-12	0.05 mf, 200 volt tubular condenser	.20
(r)	——	XL-9	Dial light, 6.3 volt, .25 amp. Mazda No. 46 (Screw type base.)	.20
(s)	——	3SZ-436	Dial pointer	.05

4. The schematic diagram of the phonograph-radio circuit used on AH-166 is shown in the small panel at the left side of Schematic Diagram No. 1. Notice that switch lug marked *A* goes to the screen grid of the 6A7 tube. Switch lug marked *B* goes to the volume control and lug marked *C* goes to the junction of R6 and the black lead from the diode i-f transformer.

ADJUSTMENTS

An oscillator with frequencies of 455, 600, 1600 and 6,000 kc should be used.

An output meter should be used across the voice coil or output transformer for observing maximum response.

If the circuit is at all disturbed, both the broadcast and short-wave bands must be realigned.

The set's oscillator is higher in frequency than the signal, so images should be observed on the low frequency side of the signals.

Always choose the minimum capacity peak on oscillator trimmers and maximum capacity peaks on antenna trimmers. The last motion in adjusting trimmers should always be a tightening one, not a loosening one.

Never leave a trimmer with the outside plate so loose that there is no tension on the screw. Either bend the plate up or remove the screw entirely.

Always use as weak a test signal as possible during alignment.

Use a standard dummy antenna for aligning either of the bands. A .0002 mf condenser may be used for the broadcast band dummy antenna and a 400 ohm non-inductive resistor for the short-wave dummy antenna.

Location of Coils and Trimmer Adjustments

The two i-f transformers are located on top of the chassis deck. The second i-f is the one directly behind the variable condenser. The four trimmers, two for each transformer, are accessible through holes in the tops of the cans.

The adjustable padding condenser for the broadcast band is mounted underneath the chassis (in the corner near the 6A7 tube) with the screw adjustment accessible through a hole in the top of the chassis.

The antenna coils for the broadcast and short-wave bands and the 455 kc wave-trap are wound on one form and mounted underneath the chassis deck directly behind the adjustable padding condenser. The trimmers for these coils are accessible through holes in the top of the chassis. The trimmer nearest the front of the chassis is the short-wave antenna trimmer. The central trimmer is the broadcast antenna trimmer. The trimmer nearest the rear of the chassis is the 455 kc wave-trap.

The oscillator coils for the broadcast and short-wave bands are wound on one form and mounted underneath the chassis deck near the variable condenser. The trimmers for these coils are accessible through holes in the top of the chassis. The trimmer nearest the front of the chassis is for the short-wave oscillator coil and the trimmer farthest from the front is for the broadcast oscillator coil.

I-f and Wave-trap Alignment

Rotate the wave-band switch to the broadcast (clockwise) position. Set the variable condenser at the minimum capacity position and feed 455 kc, through a 0.02 mf paper condenser, to the grid cap of the 6A7 tube (do not remove the grid clip from the tube). Adjust the four i-f trimmers for maximum response. Feed 455 kc to the antenna through a standard dummy antenna and adjust the wave-trap trimmer for *minimum* response. (See General Note No. 5.)

Short-Wave Alignment (Alignment of the short-wave band should precede broadcast alignment.)

Rotate the wave-band switch to the short-wave (counter-clockwise) position, and set the dial pointer exactly at 6 megacycles. Feed 6,000 kc to the antenna and adjust the short-wave oscillator trimmer for maximum response, and then adjust the short-wave antenna trimmer for maximum response. Be very careful to choose the minimum capacity peak on the oscillator trimmer.

Broadcast Alignment

Rotate the wave-band switch to the broadcast position (clockwise) and set the dial pointer at 60. Feed 600 kc through a standard dummy antenna. Adjust the broadcast series padding condenser for maximum response. Move pointer to 160, feed 1600 kc and adjust the broadcast oscillator trimmer for maximum response and then adjust the broadcast antenna trimmer for maximum response. Return pointer to 60, feed 600 kc and readjust the series padding condenser rocking the variable condenser for maximum response.

*Item	Part No. AH Schematic Diagram Nos. 1 and 2	Part No. BG Schematic No. 3	DESCRIPTION	List Price ea. Effective as of July 1st, 1938 (Subject to change without notice)	PRICE
T1, L1	4HT-360	4HT-360	Two-band antenna coil with 455 kc wave-trap		$1.55
T2	4HT-361	4HT-361	Two-band oscillator coil		1.05
T3	4HT-436	4HT-436A	Double-tuned 455 kc first i-f transformer (see prod. ch. No. 3a)		1.20
T4	4ET-351A	4ET-351A	Double-tuned 455 kc second i-f transformer		1.15
R1	KR-54	KR-54	100,000 ohm ¼ watt carbon resistor		.16
R2	ZZR-196	ZZR-196	30,000 ohm ¼ watt carbon resistor		.16
R3	3CR-395	——	410 ohm ½ watt wire-wound resistor		.16
R4	LR-65	LR-65	10,000 ohm ¼ watt carbon resistor		.16
R5	3RR-276	——	310 ohm ½ watt wire-wound resistor		.16
R6	KR-57	KR-57	1 megohm ¼ watt carbon resistor (see production change No. 3d)		.16
R7	2NR-214D	——	Volume control, 250,000 ohms with line sw. (see prod. ch. No. 3b)		.95
R7	——	3PR-258	Volume control, 250,000 ohms		.75
R8, R14	3CR-294	——	240 ohm ½ watt wire-wound resistor		.16
R9	4XR-327	4XR-327	15 megohm ¼ watt carbon resistor (see prod. ch. No. 3c)		.16
R10	KR-55	KR-55	250,000 ohm ¼ watt carbon resistor		.16
R11	KR-56	KR-56	500,000 ohm ¼ watt carbon resistor		.16
R12, R13	3FR-293	3FR-293	140 ohm ½ watt wire-wound resistor		.16
	L49BG	L42BG	Ballast tube (see production change No. 3e)		.55
	4PC-366	——	Two-gang variable condenser (see production change No. 3f)		4.00
	——	5GC-400	Two-gang variable condenser		3.50
C1, C2	3HC-274	3HC-274	0.002 mf, 600 volt tubular condenser (see prod. ch. No. 3k)		.20
C1, C2			Trimmers, part of antenna coil.		
C3, C19	4HC-395A	4HC-395A	0.000026 mf mica condenser		.20
†C4, C5, C29			Trimmers, part of i-f transformers.		
C6	EC-23	EC-23	0.03 mf, 400 volt tubular condenser (see prod. ch. No. 3g)		.20
†C7, C8, C9, C10	5AC-388	5AC-388	0.25 mf, 100 volt tubular condenser (see prod. ch. No. 3h)		.20
C11	4XC-393A	4XC-393A	0.00006 mf mica condenser (see production change No. 3j)		.20
C12	KC-58	KC-58	0.01 mf, 400 volt tubular condenser		.20
C13	2NC-231	2NC-231	Single adjustable padding condenser (Range: 300-600 mmf)		.35
C14	3LC-327	3LC-327	0.0018 mf mica condenser		.30
C15	FC-29	——	0.02 mf, 200 volt tubular condenser		.20
C16	5AC-384	5AC-384	0.0002 mf, 600 volt tubular or mica condenser		.20
C17	LC-65	LC-65	0.02 mf, 400 volt tubular condenser		.20
C18	3RC-373	3RC-373	0.0004 mf, 600 volt tubular or mica cond. (see prod. ch. No. 3l)		.20
C20	QQC-173	QQC-173	0.015 mf, 600 volt tubular condenser		.20
C21	BC-12	BC-12	0.05 mf, 200 volt tubular condenser (see prod. ch. No. 3m)		.20
C22	4HC-348A	4HC-348A	Dual 20 mf, 150 volt dry electrolytic condenser		1.00
C23	3EC-326A	3EC-326A	0.05 mf, 400 volt molded condenser		.20
C24, C25	AC-6	AC-6	0.1 mf, 200 volt tubular condenser (see prod. ch. No. 3p)		.20
C26	IC-43A	——	5 mf, 25 volt dry electrolytic condenser		.60
C27, C28			Trimmers, part of oscillator coil.		
C30	TTS-111K	TTS-111K	Wave-band switch		.55
†C31, C32	3ES-256	3ES-256	Tone control switch		.50
	——	4PT-404	Iron-core filter choke (used with BG and AH-166)		1.80
L2	——	5GS-338	12" permanent magnet dynamic speaker		15.65
	4HS-262	——	5½" dynamic speaker (not used in 166 cabinet)		4.85
	——	3BS-226	Single-pole, single-throw line switch		.55
	4BL-94	4BL-94	Pilot light, 6.3 volt, .25 amp, Mazda No. 44 (see prod. ch. No. 3r)		.20
	4HZ-817	4HZ-817	Dial face		.95
	3LZ-403A	——	Dial drive belt		.20
	4FZ-602	——	Drive shaft and pulley		.15
	——	5GZ-840	Drive shaft and pulley		.10
	3CZ-339	——	Idler pulley		.05
	4FZ-603	——	Idler spring		.05
	4UZ-604	——	Condenser shaft pulley		.15
	4RZ-592	4RZ-592	Dial pointer (see production change No. 3s)		.25
	3SZ-438C	3SZ-438C	Escutcheon with crystal		1.95
			(Four screws, part no. 4TMS-159, must also be ordered.)		
		4YZ-772	Drive cord		.02
		5JZ-824	Drive cord spring		.05
		4XM-367	Drive pulley		.10
		3XZ-684	Electron-ray cable assembly		.80
R15					
R16					
C33					
C34					

*Item number locates article on schematic diagram.
†These trimmers cannot be supplied separately.

ADDITIONAL PARTS FOR AH-166 PHONOGRAPH COMBINATION

LLR-152U	150,000 ohm ¼ watt carbon resistor	$	.16
KR-55	250,000 ohm ¼ watt carbon resistor		.16
3HC-274	0.002 mf, 600 volt tubular condenser		.20
3RC-373	0.0004 mf, 600 volt tubular or mica condenser		.20
3LPM-3	Phonograph motor		21.35
3LS-211	Phono-radio switch		.70
4RZ-733A	Crystal pick-up		11.35
3LM-253	Needle cup		.20
3LM-255	Needle cup cover		.15
4PT-404	Filter choke (for AH-166 only)		1.80
4PS-303	6½" permanent magnet dynamic speaker (for 166 cabinet only)		6.70

Tube Data

MODEL AH

1—6A7 pentagrid oscillator-modulator.
1—6D6 first i-f amplifier.
1—6Q7G diode detector, a-f amplifier, a.v.c.
1—25L6G beam power output.
1—L49BG ballast tube. (Interchangeable with L49B.)
(Model AH-166 uses L49B only)
1- 25Z5 Dual-wave rectifier

MODEL BG AH-BG-51

1—6A7 pentagrid oscillator-modulator.
1—6D6 first i-f amplifier.
1—6Q7G diode detector, a-f amplifier, a.v.c.
1—25L6G beam power output.
1—6G5 electron ray tuning indicator.
1—L42BG ballast tube. (Interchangeable with L42B.)
1- 25Z5 Dual-wave rectifier

Unless otherwise stated, octal base tubes may be replaced with either metal or equivalent octal base glass tubes.

Changes,Alignment Parts

©John F. Rider, Publisher

MODELS R167,R189
Schematics

EMERSON RADIO & PHONO. CORP.

MODELS R152,R153
R156,R158
Late Chassis R

1—6A7 pentagrid oscillator-modulator
1—6D6 i-f amplifier
1—6Q7-G diode detector, audio amplifier, automatic volume control
1—41 pentode power output
1—80 full-wave rectifier

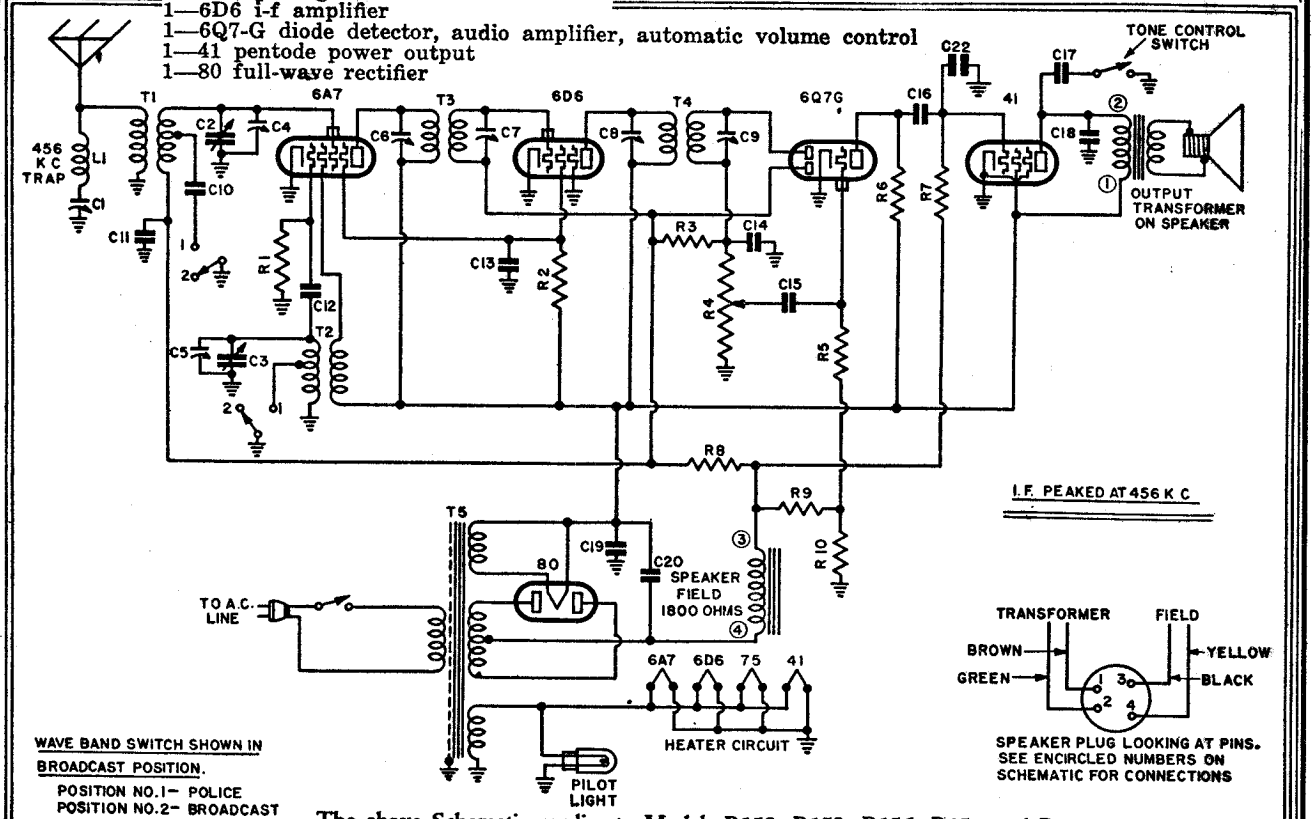

The above Schematic applies to Models R152, R153, R156, R158 and R167

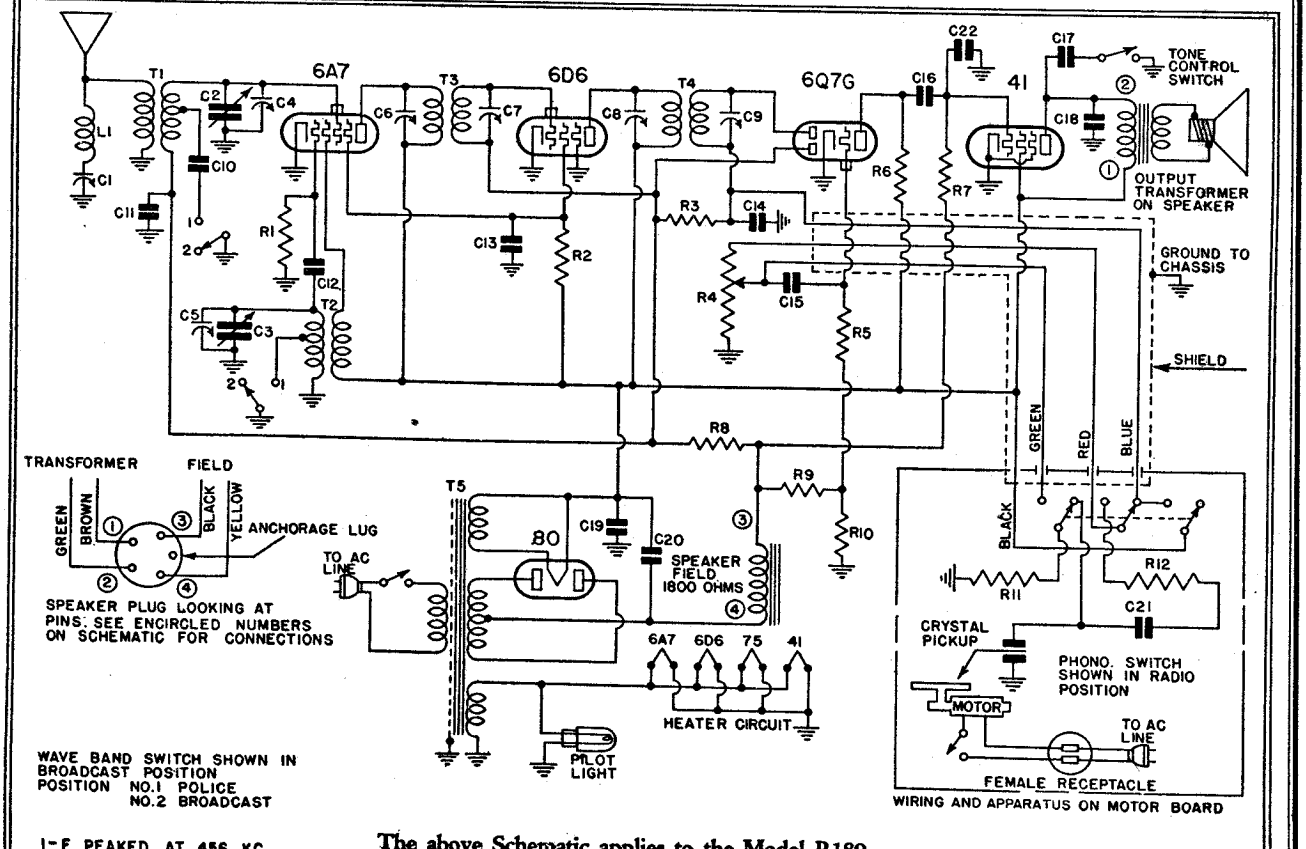

The above Schematic applies to the Model R189

©John F. Rider, Publisher

©John F. Rider, Publisher

REPLACEMENT PARTS

List Price as Effective as of Nov. 1st, 1937 (Subject to change without notice)

*Item	Part No.	DESCRIPTION	PRICE
L1	MMT-149A	456 kc wave-trap	$ .60
†T1	3RT-384	Two-band antenna coil	.85
T2	3RT-[illegible]A	Two-band oscillator coil	.80
T3	3RT-[illegible]A	456 kc first i-f transformer	1.10
T4	3RT-321A	456 kc second i-f transformer	1.10
T5	3RT-322	Power transformer	3.20
R1	KR-53U	50,000 ohm ¼ watt carbon resistor	.16
R2	3LR-265U	40,000 ohm ½ watt carbon resistor	.16
R3	HR-42U	2 megohm ¼ watt carbon resistor	.16
R4	3FR-256A	Volume control with switch—500,000 ohms	1.00
R5	3RR-274U	5 megohm ¼ watt carbon resistor	.16
R6	KR-55U	250,000 ohm ¼ watt carbon resistor	.16
R7	KR-56U	500,000 ohm ¼ watt carbon resistor	.16
R8	3RR-275U	10 megohm ¼ watt carbon resistor	.16
†R9	4CR-321	200 ohm ½ watt wire-wound resistor	.16
†R10	4CR-320	35 ohm ½ watt wire-wound resistor	.16
‡C1		Trimmer, part of 456 kc wave-trap assembly.	
C2, C3	3RC-317	Two-gang variable condenser	2.40
‡C4, C5		Trimmers, part of variable condenser.	
‡C6, C7		Trimmers, part of first i-f transformer assembly.	
‡C8, C9		Trimmers, part of second i-f transformer assembly.	
C10	AAC-114	0.001 mf mica condenser	.20
C11, C13	BC-12	0.05 mf, 200 volt tubular condenser	.20
C12	AAC-106A	0.00005 mf mica condenser	.20
C14, C22	IC-47A	0.0005 mf mica condenser	.20
C15, C18	HC-34	0.006 mf, 600 volt tubular condenser	.20
C16	KC-58	0.01 mf, 400 volt tubular condenser	.20
C17	QQC-173	0.015 mf, 600 volt tubular condenser	.20
C19, C20	3RC-318	Dual 5 mf, 300 volt dry electrolytic condenser	1.00
	3RS-230	5" dynamic speaker	4.55
	3RS-248	6" dynamic speaker	4.85
	3RS-231A	Wave-band switch	.35
	2TS-145F	Tone control switch	.35
	3RM-270	Pointer shaft bearing plate	.05
	3RM-269	Dial plate	.20
	†4BL-94	Pilot light, 6.3 volt, .25 amp., Mazda No. 44	.20
	†3RB-52	Pilot light socket	.15
	3RZ-477	Dial face	.75
	3RZ-478	Condenser pulley	.15
	†3RZ-600	Pointer pulley	.15
	3RZ-519	Drive cord spring	.02
	†4MZ-588	Dial pointer	.10
	3CZ-350	Bronze escutcheon with crystal	1.05
	3CZ-350A	Brass escutcheon with crystal	1.05
		PHONOGRAPH PARTS	
R11	OR-73	25,000 ohm ¼ watt carbon resistor	.16
R12	LLR-154	75,000 ohm ¼ watt carbon resistor	.16
C21	HC-38	0.002 mf mica condenser	.20
	3LPM-3	110 volt a.c. phonograph motor	23.45
	3RS-291	8" dynamic speaker	7.00
	3LS-211A	Phono-radio switch	.85
	3RS-292	On-off switch for motor	.75
	3ZZ-564	Crystal pick-up	18.00

When ordering replacement parts specify part numbers.

*Item number locates the article on the schematic diagram.

†See production changes.

‡These trimmers are parts of assemblies and cannot be supplied separately.

PRODUCTION CHANGES

In early receivers the oscillator coil was part number 3RT-319. When replacing this coil with the new coil part number 3RT-319A, it will be necessary to remove the short length of shielding over the white lead (lead from wave-band switch to tap on coil.)

IN RECEIVERS BEARING SERIAL NUMBERS BELOW 1,019,000:
a. R3 was a 3 megohm ¼ watt carbon resistor, part no. NNR-220U

IN RECEIVERS BEARING SERIAL NUMBERS BELOW 1,043,350:
a. The first i-f tube was a type 78.
b. The first i-f transformer was part no. 3RT-320.
c. The second i-f transformer was part no. 3RT-321.

IN RECEIVERS BEARING SERIAL NUMBERS BELOW 1,180,983:
a. The pointer pulley was part no. 3RZ-479.
b. The dial pointer was part no. 3FZ-353.

IN RECEIVERS BEARING SERIAL NUMBERS BELOW 1,284,001:
a. The antenna coil was part no. 3RT-318.

IN RECEIVERS BEARING SERIAL NUMBERS BELOW 1,311,103:
a. A type 75 tube was used in place of the 6Q7-G.
b. R8 was a 310 ohm resistor, part no. 3RR-276.
c. R9 was a 23 ohm resistor, part no. 3RR-266.

IN RECEIVERS BEARING SERIAL NUMBERS BELOW 1,364,351:
a. The pilot light was the screw type, part no. XL-9.
b. The pilot light socket was part no. 3RB-38.

IN RECEIVERS BEARING SERIAL NUMBERS BELOW 1,405,542:
a. C22 was not in the circuit.

ADJUSTMENTS

An oscillator with frequencies of 456 and 1400 kc is required.

An output meter should be used across the voice coil or output transformer for observing maximum response.

Always use as weak a test signal as possible when aligning the receiver.

Location of Coils and Trimmer Adjustments

The two i-f transformers are located on top of the chassis deck. The first i-f transformer is the one directly behind the 6A7 tube. The trimmers for the two i-f transformers are available through holes in the tops of the cans.

The trimmers for the antenna and oscillator coils are located on the variable condenser. The trimmer on the front section is for the antenna coil.

The 456 kc wave-trap is mounted on the rear chassis wall directly beneath the wave-band switch. The trimmer for the 456 kc wave-trap is mounted on the coil and is accessible from the bottom of the chassis.

I-f and Wave-trap Alignment

Rotate the wave-band switch (located on the rear wall of the chassis) to the broadcast position, clockwise, and swing the variable condenser to the minimum capacity position. Feed 456 kc to the grid-cap of the 6A7 tube and adjust the four i-f trimmers for maximum response. Feed 456 kc through a dummy antenna (a .0002 mf condenser may be used as a substitute) to the antenna lead and adjust the wave-trap trimmer for *minimum* response. (See General Notes, paragraph No. 1.)

R-f Alignment

With the wave-band switch in the broadcast position, clockwise, set the dial pointer at 140. Feed 1400 kc through a standard dummy antenna (a .0002 mf condenser may be used as a substitute) to the antenna lead and adjust first the oscillator trimmer (on rear section of variable condenser) then the antenna trimmer (on front section of variable condenser) for maximum response. The police band is self-tracking and does not require any adjustment.

GENERAL NOTES

1. The wave-trap in the receiver has been adjusted for maximum signal rejection at 456 kc. If, however, persistent interference is experienced from some particular telegraphic station, readjust the wave-trap trimmer until the response from the interfering station is at a minimum.
2. The receiver should never be turned on with either the speaker plug or the 41 tube out of their sockets, since the rapid rise in rectifier voltage would damage the electrolytic condensers.
3. The pilot light may be replaced by removing the snap-on socket from the dial and then removing the bulb. It is not necessary to remove either the dial or chassis from the cabinet.
4. The color coding of the leads of the i-f transformers, is as follows:

Grid—green	Plate—blue
Grid return—black	B plus—red

5. With a few exceptions, the color coding of the general wiring is as follows:

Plate—blue	A.v.c. and cathode—white or yellow
B plus—red	Grid—green
Screen—brown	Filament and ground—black

6. The phonograph motor has been adjusted at the factory to turn at a speed of 78 r.p.m. The speed may be checked by counting the turns per minute or by using a stroboscope disc and a neon light. (The stroboscope method will only work when neon bulb is lighted from a 60 cycle a.c. supply.) To readjust the speed of the motor, part No. 3LPM-3, remove the turn-table and turn the speed adjusting screw (located near the turn-table shaft). A clockwise rotation of the screw decreases the speed. The speed should be checked with the pick-up and record in playing position.
7. The color coding of the power transformer leads is as follows:

Primary—two black leads	6.3 v. sec.—two heavy green leads
High voltage sec.—two red leads	5 v. sec.—two heavy yellow leads
High voltage sec. center tap—yellow and red	

Tube Data

The tube complement is as follows:

VOLTAGE ANALYSIS

Readings should be taken on the 250 volt scale of a 1000 ohms-per-volt meter. Voltages listed below are from point indicated to ground (chassis) with the volume control turned on full and no signal. Line voltage for these readings was 117.5 volts, 60 cycles, a.c.

Tube	*Plate*	*Screen*	*Cathode*	*Osc. Plate*	*Fil.*
6A7	182	70	0	182	6.3
6D6	182	70	0	—	6.3
6Q7-G	67	—	0	—	6.3
41	165	182	0	—	6.3

Voltage across speaker field—70.
Voltage from B minus to chassis—80.
B plus at 80 tube filament—262.

Voltage rating ..... 105-125 volts, 60 cycles, a.c.
Power consumption . 45 watts for receiver and 20 watts for motor.
Frequency ranges ... 540 to 1580 kc. and 1580 to 4200 kc.

©John F. Rider, Publisher

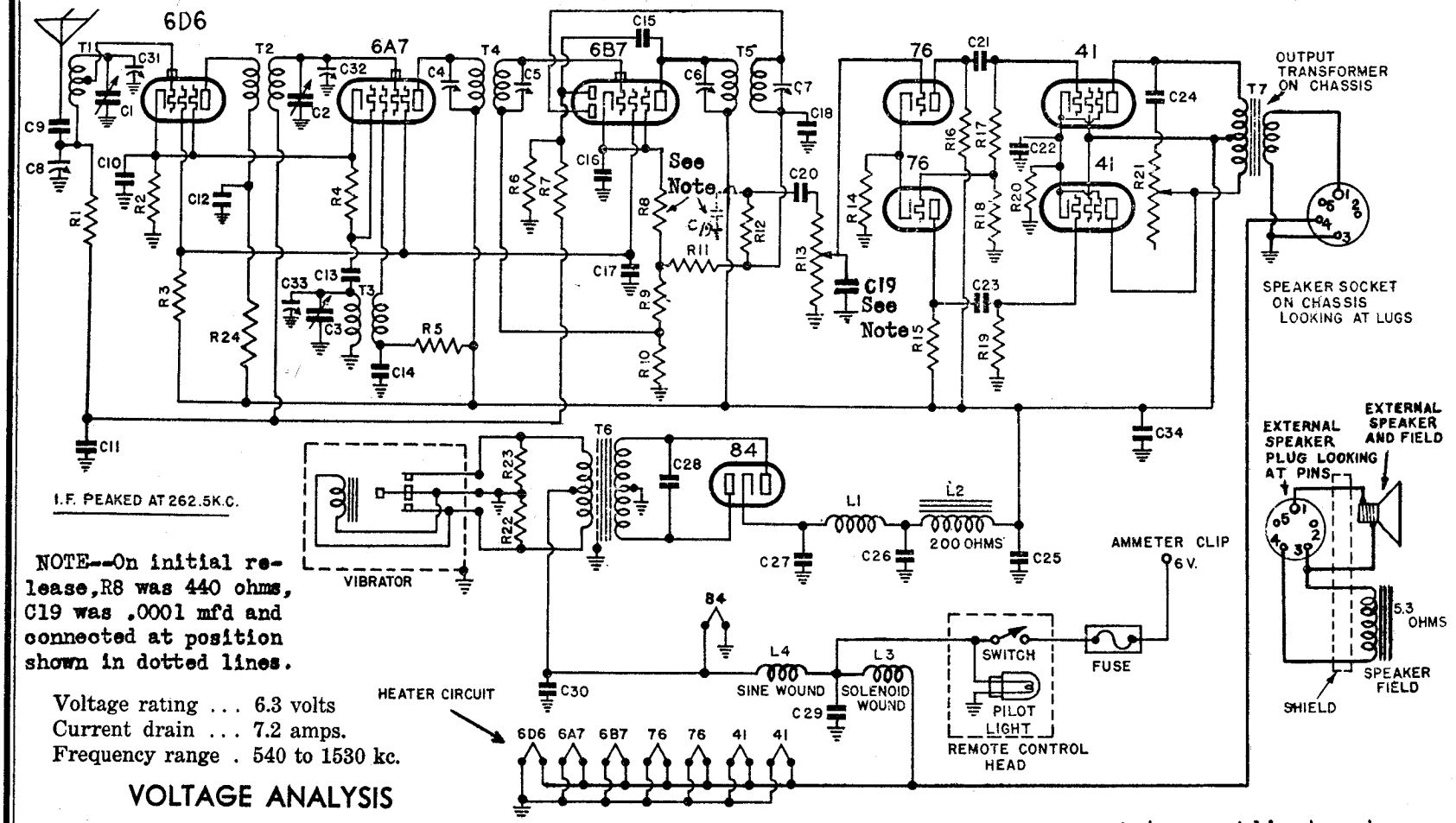

NOTE--On initial release, R8 was 440 ohms, C19 was .0001 mfd and connected at position shown in dotted lines.

Voltage rating . . . 6.3 volts
Current drain . . . 7.2 amps.
Frequency range . 540 to 1530 kc.

VOLTAGE ANALYSIS

All voltages should be measured with a 1000 ohms-per-volt meter. Voltages measured from the point indicated to ground (chassis) with no signal and volume control turned on full. Readings taken with battery voltage of 6.0 volts.

Tube	*Plate*	*Screen*	*Cathode*	*Osc. Plate*
6D6	208	80	4	—
6A7	212	80	4	130
6B7	212	80	7	—
76	130	—	8.7	—
76	130	—	8.7	—
41	210	212	17	—
41	210	212	17	—

B plus from 84 cathode to chassis—226
Voltage across heaters—6.0
Voltage across filter choke L2—10.4
Voltage across speaker field—6.0

Antenna Adjustment

To adjust antenna circuit of this receiver to the car antenna, tune the receiver to a signal in the vicinity of 600 KC. Adjust the antenna padder condenser until the signal is received at maximum volume. Keep the volume control turned down as low as possible while making the adjustment.

©John F. Rider, Publisher

ALIGNMENT PROCEDURE

The receiver was carefully adjusted and tested at the factory, and should reach the customer in perfect condition. Except for the antenna padder these adjustments should not be disturbed unless it is absolutely necessary, as in the repairing of a damaged set. This should be done by an experienced auto service man only.

I-f Alignment

To align the intermediate frequency transformers, use a good modulated oscillator set for 262.5 kc. Rotate the variable condenser to the minimum capacity position, turn the volume control on full and ground the antenna to the chassis.

Connect the test oscillator lead, through a paper condenser (.02 mf or larger), to the grid cap of the 6A7 tube. Do not remove the grid clip from the tube. Connect an output meter across the primary of the speaker transformer or across the voice coil. Using the *smallest output* from the test oscillator that will give a definite reading on the meter, adjust the two i-f transformers for maximum response. Use a non-metallic screw driver if possible.

Radio Frequency and Oscillator Alignment

Connect the test oscillator lead through a standard dummy antenna (a .0002 mf condenser may be substituted) to the antenna connector of the receiver. Rotate the variable condenser to the *minimum capacity* position. Feed 1530 kc and adjust the oscillator trimmer (center) on the variable condenser for maximum response. Set the test oscillator to some frequency near 1400 kc and swing the variable until this signal is heard. Adjust the two r-f trimmers (front and rear) on the variable condenser for maximum response. Set the test oscillator for 600 kc and swing the variable until this signal is heard. Adjust the antenna padder (on chassis wall below the variable condenser) for maximum response. Reset the test oscillator to some frequency near 1400 kc and readjust the two r-f trimmers for maximum response. Reduce the output of the test oscillator and repeat this adjustment.

NOTE: The antenna padder should be readjusted after the receiver is installed in the car.

Tube Data

The tube complement is as follows:

1—6D6 r-f amplifier.
1—6A7 pentagrid oscillator-modulator.
1—6B7 i-f amplifier, diode detector, and a.v.c.
1—76 audio amplifier (near power transformer).
1—76 phase inverter (near variable condenser).
2—41 push-pull pentode power output.
1—84 full-wave thermionic rectifier.
1 Primary type vibrator.

The function of the vibrator is to convert the direct current from the battery into alternating current to actuate the power transformer. The stepped-up voltage is then rectified into direct current by the 84 tube for use as plate supply.

GENERAL NOTES

1. Before removing the chassis from the case pull the speaker plug out of its socket. The speaker plug should be replaced before the receiver is turned on.
2. Before removing the chassis from its case, remove the tone control from the case. The large rubber knob is forced over a knurled bushing on the tone control shaft and may be removed by pulling the knob away from the case.
3. It should be noted that one side of the speaker field is grounded to the speaker frame.
4. A 15 ampere fuse is located in a small tubular holder in the battery lead. To replace the fuse, remove the cap, insert the fuse and replace the cap. The fuse is intended to protect the receiver and in no case should one larger than 15 amperes be used.

Suppression of Ignition Interference

If, when the receiver is in operation, and the motor is running, the ignition interference is excessive the following suggestions should help to reduce it to a satisfactory level.

By-pass dome light wire at instrument panel with a ½ mf condenser.
By-pass the low tension lead to the ignition coil with a ½ mf condenser.
Shield high tension lead from coil and ground to fire wall.
Shield low tension leads to ignition coil.

Try grounding antenna shield at various points, and also try leaving shield ungrounded, except at point where it is automatically grounded at receiver by means of the metal connector. Move all adjacent wiring slightly, and note if it may be coupling to the battery lead to receiver.

Bond steering column to fire wall.
Try bonding exhaust pipe, particularly if interference is increased with passengers in car.
Bond metal cables or pipes coming through fire wall, connecting them to the fire wall. If car has wooden floor boards, place a screen underneath floor mat and note if interference is decreased, particularly with passengers in car.
Check antenna wiring, making sure it is shielded completely.
Try bonding windshield wiper pipe.
Check ignition system for defects.

When condensers are used for by-passing ignition interference, their leads should be as short as possible, since often a condenser with leads a fraction of an inch long will be very effective in places where the same condenser with longer leads would be useless.

NOTE: It is recommended that the charging rate of the car generator be increased slightly to compensate for the added drain of the receiver.

REPLACEMENT PARTS

*ITEM	PART NO.	DESCRIPTION
L1	OOT-166A	R-f "B" choke
L2	3VT-329	Iron-core filter choke—200 ohms
L3	OOT-167	R-f "A" choke—solenoid
L4	3VT-328	R-f "A" choke—sine wound
T1	3VT-323	Antenna coil
T2	3VT-324	R-f interstage coil
T3	3UT-325	Oscillator coil
T4	3VT-326	262.5 kc first i-f transformer
T5	3VT-327	262.5 kc second i-f transformer
R1, R12, R15, R16	KR-54	100,000 ohm ¼ watt carbon resistor
R2,	3VR-269	440 ohm ½ watt wire-wound resistors
R3	AR-7	30,000 ohm 1 watt carbon resistor
R4	3VR-272	60,000 ohm ¼ watt carbon resistor
R5	DDR-122	20,000 ohm ½ watt carbon resistor
R6, R7	KR-57	1 megohm ¼ watt carbon resistors
R9, R8	3VR-268	340 ohm ½ watt wire-wound resistor
R10	QQR-180	1,100 ohm ¼ watt carbon resistor
R11, R17, R19	KR-56	500,000 ohm ¼ watt carbon resistors
R13	3VR-267	Volume control—1 megohm
R14	LR-64	5,000 ohm ¼ watt carbon resistor
R18	KR-53	50,000 ohm ¼ watt carbon resistor
R20	3VR-271	510 ohm 1 watt wire-wound resistor
R21	3VR-279	Tone control—50,000 ohms
R22, R23	3VR-270	90 ohm ½ watt wire-wound resistor
R24	GR-85	2,000 ohm ¼ watt carbon resistor
C1, C2, C3	3VC-319	3 gang variable condenser
†C4, C5		Trimmer, part of first i-f transformer assembly
†C6, C7		Trimmer, part of second i-f transformer assembly
C8	3VC-334	Antenna padding condenser. Range—150 to 300 mmf.
C9, C11, C20	FC-29	0.02 mf, 200 volt tubular condenser
C10	BC-12	0.05 mf, 200 volt tubular condenser
C12, C27	KC-58	0.01 mf, 400 volt tubular condenser
C13, C14, C15, C18, C29, C19	AC-7A	0.00025 mf mica condenser
C16, C17	3VC-323	Dual 0.1 mf, 200 volt tubular condenser with mounting strap
C21, C23, C24	EC-23	0.03 mf, 400 volt tubular condenser
C22, C25, C26	3VC-320	Three section dry electrolytic condenser in cardboard container... C22—20 mf, 25 volt C25, C26—8 mf, 350 volt
C31	EEC-132	0.1 mf, 400 volt tubular condenser
C28	3VC-321	0.005 mf, 2,000 volt tubular condenser
C30	3VC-322	0.5 mf, 50 volt tubular condenser with mounting foot
‡C31, C32, C33		Trimmer on variable condenser
	OOC-164	Special 0.5 mf ammeter condenser
	OOC-165	Special 0.5 mf generator condenser
	3VS-247	8" dynamic speaker
	3VZ-510	Rubber tone control knob
	OOZ-165	Distributor suppressor
	3VV-10	Non-synchronous vibrator
	3VZ-540	Tuning control cable
	3VZ-541	Volume control cable

* Item number locates the article on the schematic diagram.

† These trimmer condensers are part of the i-f coil assemblies and can not be supplied separately.

‡ These trimmer condensers are part of the variable condenser and can not be supplied separately.

PRODUCTION CHANGES

IN RECEIVERS BEARING SERIAL NUMBERS BELOW 950,300:

(a) C8 was part number 2KC-198 with a range of 200 to 400 mmf.

MODEL V155 Late

EMERSON RADIO & PHONO. CORP

Chassis V. Above Ser. 951850

Schematic, Voltage

If for any reason during the operation of the receiver the dial goes off calibration, rotate the tuning knob counter-clockwise until the pointer (or dial) reaches the stop at the left-hand end of the control and then rotate the knob clockwise until the stop is reached at the right-hand end of the control. This procedure will automatically recalibrate the dial.

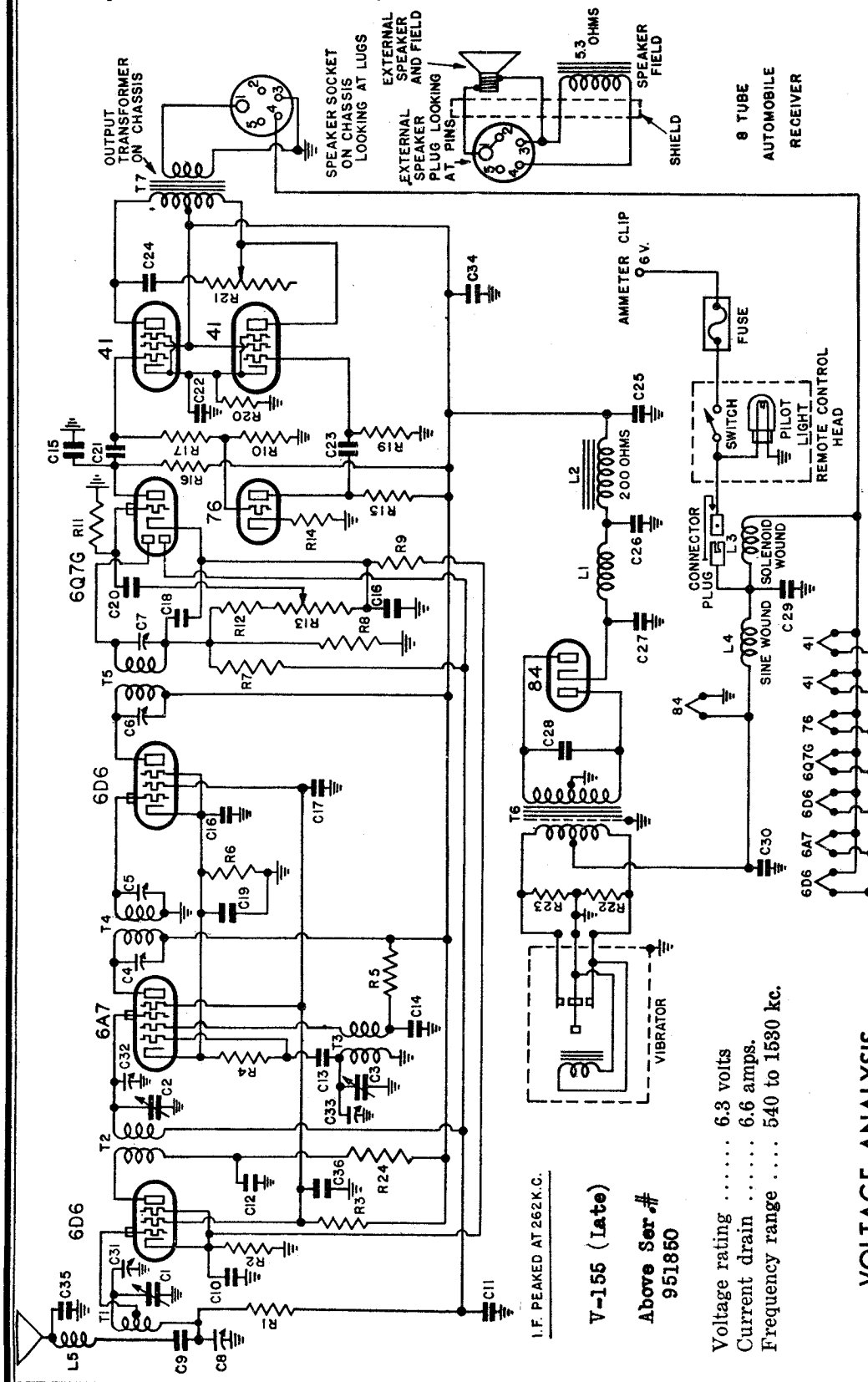

V-155 (Late)

Above Ser. # 951850

Voltage rating ..... 6.3 volts
Current drain ..... 6.6 amps.
Frequency range .... 540 to 1530 kc.

VOLTAGE ANALYSIS

Tube	Plate	Screen	Cathode	Osc. Plate
6D6 (r-f, behind variable cond.)	208	80	3.5	—
6A7	212	80	5.2	130
6D6	212	80	5.2	—
6Q7G	100	—	3.5	—
76	110	—	5.4	—
41	210	212	17	—
41	210	212	17	—

All voltages should be measured with a 1000 ohms-per-volt meter. Voltages measured from the point indicated to ground (chassis) with no signal and volume control turned on full. Readings taken with battery voltage of 6.0 volts.

B plus from 84 cathode to chassis—226
Voltage across heaters—6.0
Voltage across filter choke L2—10.4
Voltage across speaker field—6.0

©John F. Rider, Publisher

©John F. Rider, Publisher

ALIGNMENT PROCEDURE

The receiver was carefully adjusted and tested at the factory, and should reach the customer in perfect condition. Except for the antenna padder these djustments should not be disturbed unless it is absolutely necessary, as in the repairing of a damaged set. This should be done by an experienced auto service man only.

I-f Alignment

To align the intermediate frequency transformers, use a good modulated oscillator set for 262 kc. Rotate the variable condenser to the minimum capacity position, turn the volume control on full and ground the antenna to the chassis.

Connect the test oscillator lead, through a paper condenser (.02 mf or larger), to the grid cap of the 6A7 tube. Do not remove the grid clip from the tube. Connect an output meter across the primary of the speaker transformer or across the voice coil. Using the *smallest output* from the test oscillator that will give a definite reading on the meter, adjust the two i-f transformers for maximum response. Use a non-metallic screw driver if possible.

Radio Frequency and Oscillator Alignment

Connect the test oscillator lead through a standard dummy antenna (a .0002 mf condenser may be substituted) to the antenna connector of the receiver. Rotate the variable condenser to the *minimum capacity* position. Feed 1530 kc and adjust the oscillator trimmer (center) on the variable condenser for maximum response. Set the test oscillator to some frequency near 1400 kc and swing the variable until this signal is heard. Adjust the two r-f trimmers (front and rear) on the variable condenser for maximum response. Set the test oscillator for 600 kc and swing the variable until this signal is heard. Adjust the antenna padder (on chassis wall below the variable condenser) for maximum response. Reset the test oscillator to some frequency near 1400 kc and readjust the two r-f trimmers for maximum response. Reduce the output of the test oscillator and repeat this adjustment.

NOTE: The antenna padder should be readjusted after the receiver is installed in the car.

To adjust the receiver antenna circuit to the car antenna, an adjustable condenser (padder) is provided in the receiver. This antenna padder is located on the cable chuck side of the receiver with its screw adjustment accessible through a hole in the receiver wall.

Turn the receiver on and tune in a station in the vicinity of 600 kc. Adjust the antenna padder until the station is received at maximum volume. Keep the volume control turned down as low as possible while making this adjustment. In extreme conditions the car antenna capacity may be such that a sharp peak on the antenna padder is not obtainable. In such a case adjust for maximum gain.

Tube Data

1—6D6 r-f amplifier (behind variable condenser).
1—6A7 pentagrid oscillator-modulator.
1—6D6 i-f amplifier.
1—6Q7G audio amplifier, diode detector, and a.v.c.
1—76 phase inverter (near variable condenser).
2—41 push-pull pentode power output.
1—84 full-wave thermionic rectifier.
1 Primary type vibrator.

GENERAL NOTES

1. Before removing the chassis from the case pull the speaker plug out of its socket. The speaker plug should be replaced before the receiver is turned on.
2. Before removing the chassis from its case, remove the tone control from the case. The large rubber knob is forced over a knurled bushing on the tone control shaft and may be removed by pulling the knob away from the case.
3. It should be noted that one side of the speaker field is grounded to the speaker frame.
4. A 15 ampere fuse is located in a small tubular holder in the battery lead. To replace the fuse, remove the cap, insert the fuse and replace the cap. The fuse is intended to protect the receiver and in no case should one larger than 15 amperes be used.

Suppression of Ignition Interference

If, when the receiver is in operation, and the motor is running, the ignition interference is excessive the following suggestions should help to reduce it to a satisfactory level.

Insulate the speaker unit from the firewall, using the fibre washer supplied in the speaker kit. (See paragraph (a) on page three).

By-pass dome light wire at instrument panel with a ½ mf condenser to ground.
By-pass the low tension lead to the ignition coil with a ½ mf condenser to ground.
Shield high tension lead from coil and ground to fire wall.
Shield low tension leads to ignition coil.

Try grounding antenna shield at various points, and also try leaving shield ungrounded, except at point where it is automatically grounded at receiver by means of the metal connector. Move all adjacent wiring slightly, and note if it may be coupling to the battery lead to receiver.

Bond steering column to fire wall.

Try bonding exhaust pipe, particularly if interference is increased with passengers in car.

Bond metal cables or pipes coming through fire wall, connecting them to the fire wall. If car has wooden floor boards, place a screen underneath floor mat and note if interference is decreased, particularly with passengers in car.

Check antenna wiring, making sure it is shielded completely.

Try bonding windshield wiper pipe.

Check ignition system for defects.

When condensers are used for by-passing ignition interference, their leads should be as short as possible, since often a condenser with leads a fraction of an inch long will be very effective in places where the same condenser with longer leads would be useless.

NOTE: It is recommended that the charging rate of the car generator be increased slightly to compensate for the added drain of the receiver.

*Item	Part No.	DESCRIPTION
L1	OOT-166A	R-f "B" choke
L2	3VT-329	Iron-core filter choke—200 ohms
L3	OOT-167	R-f "A" choke—solenoid
L4	3VT-328	R-f "A" choke—sine wound
L5	3UT-349	Antenna choke
T1	3VT-323	Antenna coil
T2	3VT-324	R-f interstage coil
T3	3UT-325	Oscillator coil
T4	3VT-326	262 kc first i-f transformer
T5	3VT-327	262 kc second i-f transformer
T6	3VT-330	Power transformer
T7	3VT-341	Output transformer
R1, R12, R16	KR-54	100,000 ohm ¼ watt carbon resistor
R2, R6	4ER-286	510 ohm ½ watt wire-wound resistor
R3	AR-7	30,000 ohm 1 watt carbon resistor
R4	3VR-272	60,000 ohm ¼ watt carbon resistor
R5	DDR-122	20,000 ohm ½ watt carbon resistor
R7, R11	KR-57	1 megohm ¼ watt carbon resistor
R8	KR-55	250,000 ohm ¼ watt carbon resistor
R9, R22, R23	3VR-270	90 ohm ½ watt wire-wound resistor
R10	NNR-204	95,000 ohm ¼ watt carbon resistor
R13	3VR-267	Volume control—1 megohm
R14	LR-64	5,000 ohm ¼ watt carbon resistor
R15	LLR-154	75,000 ohm ¼ watt carbon resistor
R17, R19	KR-56	500,000 ohm ¼ watt carbon resistor
R20	3VR-271	510 ohm 1 watt wire-wound resistor
R21	3VR-279	Tone control—50,000 ohms
R24	GR-85	2,000 ohm ¼ watt carbon resistor
C1, C2, C3	3VC-319	3 gang variable condenser
†C4, C5		Trimmer, part of first i-f transformer assembly
†C6, C7		Trimmer, part of second i-f transformer assembly
C8	3VC-342	Antenna padding condenser. Range 75 to 300 mmf
C9	IC-47A	0.0005 mf mica condenser
C10, C19	BC-13	0.25 mf, 200 volt tubular condenser
C11, C20	FC-29	0.02 mf, 200 volt tubular condenser
C12, C27	KC-58	0.01 mf, 400 volt tubular condenser
C13, C14, C15, C18, C29	AC-7A	0.00025 mf mica condenser
C16, C17	3VC-323	Dual 0.1 mf, 200 volt tubular condenser
C21, C23, C24	EC-23	0.03 mf, 400 volt tubular condenser
C22, C25, C26	3VC-320B	Three section dry electrolytic condenser in cardboard container. C22—20 mf, 25 volt C25, C26—8 mf, 350 volt
C28	3VC-321	0.005 mf, 2,000 volt tubular condenser
C30	3VC-322	0.5 mf, 50 volt tubular condenser
‡C31, C32, C33		Trimmer on variable condenser
C34	EEC-132	0.1 mf, 400 volt tubular condenser
C35	3UC-339	0.00005 mf mica condenser on isolantite base
C36	YC-98B	4 mf, 150 volt tubular dry electrolytic condenser
	OOC-164	Special 0.5 mf ammeter condenser
	OOC-165	Special 0.5 mf generator condenser
	3VS-247	8" dynamic speaker
	3VZ-510	Rubber tone control knob
	OOZ-165	Distributor suppressor
	3VV-10	Non-synchronous vibrator
	3VZ-540	Tuning control cable
	3VZ-541	Volume control cable

IN RECEIVERS BEARING SERIAL NUMBERS BELOW 950,300:
(a) C8 was part number 2KC-198 with a range of 200 to 400 mmf.

* Item number locates the article on the schematic diagram.
† These trimmer condensers are part of the i-f coil assemblies and can not be supplied separately.
‡ These trimmer condensers are part of the variable condenser and can not be supplied separately.

EMERSON RADIO & PHONO. CORP.

MODEL AL 164
MODEL AL 202
Chassis AL
Schematics

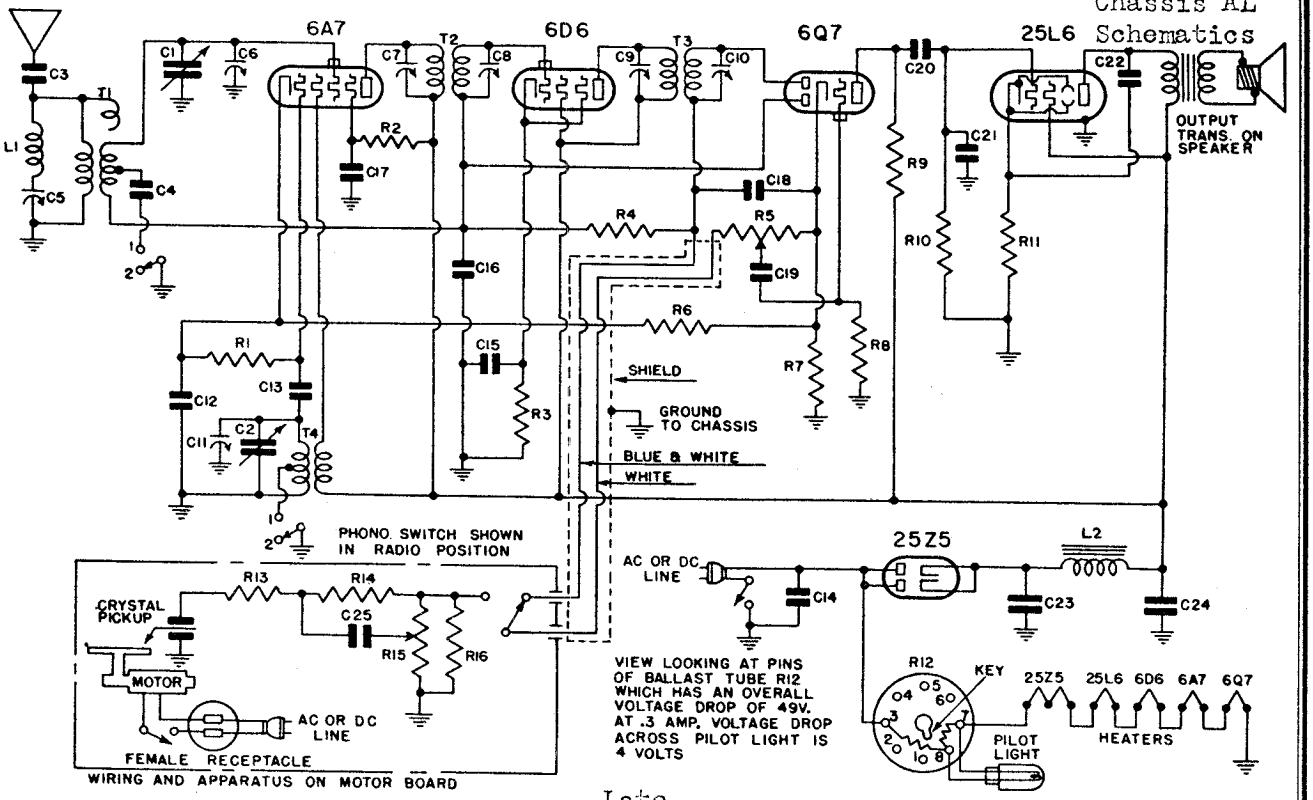

I.F. PEAKED AT 456 KC

6 TUBE AC - DC RECEIVER

Late

MODEL AL-164

WAVE BAND SWITCH SHOWN IN BROADCAST POSITION. POSITION NO. 1 POLICE
NO. 2 BROADCAST

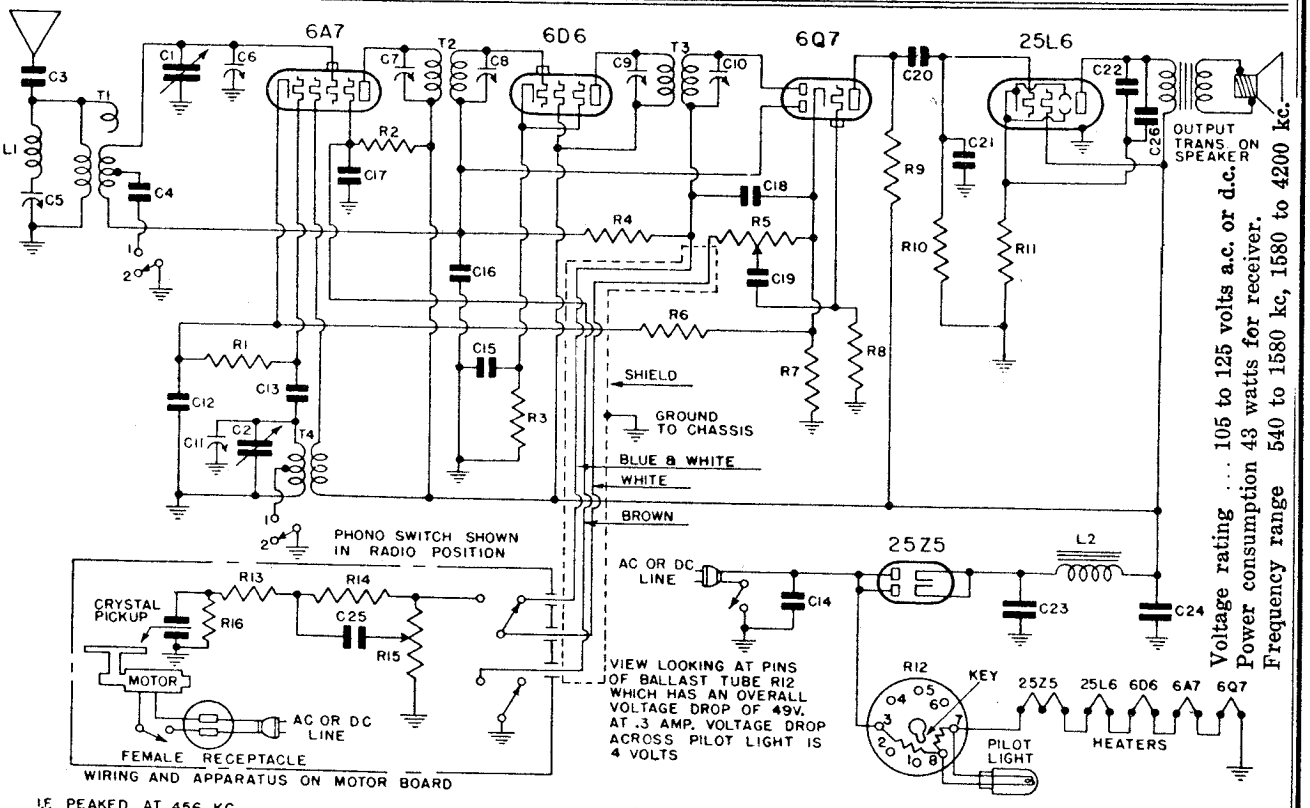

I.F. PEAKED AT 456 KC

MODEL AL-202

WAVE BAND SWITCH SHOWN IN BROADCAST POSITION POSITION NO 1 POLICE
NO 2 BROADCAST

6 TUBE AC-DC RECEIVER

Voltage rating .... 105 to 125 volts a.c. or d.c.
Power consumption 43 watts for receiver.
Frequency range 540 to 1580 kc, 1580 to 4200 kc.

©John F. Rider, Publisher

©John F. Rider, Publisher

REPLACEMENT PARTS LIST

List Prices as of Effective as of April 15th, 1938 (Subject to change without notice.)

*Item	Part No.	DESCRIPTION	PRICE
L2	4PT-404	Iron-core filter choke (see production changes)	$1.80
T1	3RT-384A	Two-band antenna coil (see production changes)	.85
T2	3RT-320B	456 kc first i-f transformer	1.10
T3	3RT-321B	456 kc second i-f transformer	1.10
T4	3RT-319A	Two-band oscillator coil	.80
L1	4DT-343	456 kc adjustable wave-trap	.60
R1	KR-53	50,000 ohm ¼ watt carbon resistor	.16
R2	2CR-193	30,000 ohm ½ watt carbon resistor	.16
R3	3CR-295	410 ohm ½ watt wire wound resistor	.16
R4, R8	HR-42	2 megohm ¼ watt carbon resistor	.16
R5	3FR-256	Volume control with line switch—500,000 ohms	1.05
R6, R7	3CR-294	240 ohm ½ watt wire wound resistor	.16
R9	KR-55	250,000 ohm ¼ watt carbon resistor	.16
R10, R13, R16	KR-56	500,000 ohm ¼ watt carbon resistor (see production changes)	.16
R11	3FR-293	140 ohm ½ watt wire wound resistor	.16
R12	2UR-224	Plug-in type ballast resistor (L49B and L49BG are interchangeable)	.55
R14	4LR-318	1.5 megohm ¼ watt carbon resistor	.16
R15	4LR-312A	Tone control and motor on-off switch (see production changes)	1.05
C1, C2	4CC-350A	Two-gang variable condenser	2.60
C3	3HC-274	0.002 mf, 600 volt tubular condenser	.20
C4	4DC-367	0.0012 mf mica condenser (see production changes)	.30
†C5	——	Trimmer, part of wave-trap assembly.	
‡C6, C11	——	Trimmer, part of variable condenser.	
†C7, C8	——	Trimmer, part of first i-f transformer assembly.	
†C9, C10	——	Trimmer, part of second i-f transformer assembly.	
C12, C17	AC-6	0.1 mf, 200 volt tubular condenser	.20
C13	AAC-106A	0.00005 mf mica condenser	.20
C14	2VC-242A	0.1 mf, 400 volt molded condenser	.20
C15	FC-29	0.02 mf, 200 volt tubular condenser (see production changes)	.20
C16	BC-12	0.05 mf, 200 volt tubular condenser	.20
C18, C21	5AC-384	0.0002 mf, 600 volt tubular or mica condenser	.20
C19	KC-58	0.01, 400 volt tubular condenser	.20
C20, C26	LC-65	0.02 mf, 400 volt tubular condenser	.20
C22	3FC-336	0.025 mf, 400 volt tubular condenser	.20
C23, C24	3CC-261	20 mf. 150 volt wet electrolytic condenser	.90
C25	AC-7A	0.00025 mf mica condenser	.20
	3RS-231A	Wave-band switch	.35
	4LZ-582	Dial face	.70
	4BL-94	Pilot light, 6.3 volt, .25 amp., Mazda No. 44	.20
	3CZ-336	Dial drive belt	.10
	3CZ-337B	Dial drive shaft and pulley	.10
	3CZ-339	Idler pulley	.05
	3CZ-340	Idler pulley spring	.05
	3CZ-341	Condenser shaft pulley	.10
	4MZ-588	Dial pointer	.25
	3FZ-351	Escutcheon with crystal	1.05
	3GPM-1	A.c.-d.c. phonograph motor complete with accessories	45.00

MODEL 164 ONLY (LATE)

	3GS-202	Phono-radio switch	.50
	3FS-251	5½" dynamic speaker (see production changes)	4.90
	4LS-310	6½" permanent magnet dynamic speaker (see production changes)	7.55
	3GM-251	Phonograph needle-cup	.75
	3ZZ-564A	Crystal pick-up (see production changes)	18.00
	4LZ-761	Crystal pick-up (see production changes)	18.00

MODEL 202 ONLY

	4LS-322	Phono-radio switch	.50
	4LS-321	8" permanent magnet dynamic speaker	7.80
	3LM-253	Needle-cup	.20
	3LM-255	Needle-cup cover	.15
	4RZ-733A	Crystal pick-up	18.00

VOLTAGE ANALYSIS

Readings should be taken with a 1000 ohms-per-volt meter. Voltages listed below are from point indicated to ground (chassis) with the volume control turned on full and no signal. Line voltage for these readings was 117.5 volts, 60 cycles, a.c. All readings except heaters and cathodes were taken on 250 volt scale.

Tube	*Plate*	*Screen*	*Cathode*	*Osc. Plate*	*Fil.*
6A7	100	50	2.3	100	6.3
6D6	100	100	3.5	—	6.3
6Q7G	43	—	1.2	—	6.3
25L6G	92	100	6.5	—	25.0

Voltage at 25Z5 cathode—120 volts.
Voltage across speaker field—28 volts.
Voltage drop across ballast tube (pins Nos. 8, 7)—49 volts.
Voltage drop across pilot light section (pins Nos. 8 and 7)—4 volts.

Tube Data

The tube complement is as follows:

1—6A7 pentagrid oscillator-modulator.
1—6D6 first i-f amplifier.
1—6Q7G diode detector, a-f amplifier, a.v.c.
1—25L6G beam power output.
1—25Z5 dual half-wave rectifier.
1—2UR-224 ballast tube (R12 on schematic). (L49B and L49BG are interchangeable with 2UR-224.)

Unless otherwise specified all octal-base tubes may be replaced with either metal or octal-base glass tubes.

PRODUCTION CHANGES

1. Receivers bearing serial numbers below 1,214,000 had a phono-motor on-off switch instead of tone control with switch.
2. Receivers bearing serial numbers below 1,436,000 did not have the turn-table insulated. These receivers also used speaker, part no. 3FS-251, pick-up, part no. 3ZZ-564A, and did not use the filter choke, part no. 4PT-404.
3. On Model AL-164: C26 has been omitted; R16 is .5 megohm.
   On Model AL-202: C26 is .02 mf; R16 has been omitted.
4. In AL receivers bearing serial numbers below 1,342,161 the antenna coil was part no. 3RT-318. Antenna coils, part nos. 3RT-318 and 3RT-384, are interchangeable. The lug arrangement for both coils is shown in Fig. 1 at the right.
5. In AL receivers bearing serial numbers 1,342,161 to 1,436,458 and between 1,468,963 to 1,471,250 the antenna coil was part no. 3RT-384 and C4 was .001 mf. Part no. 3RT-384A is interchangeable for 3RT-384 if C4 is made .0012 mf, part no. 4DC-367.

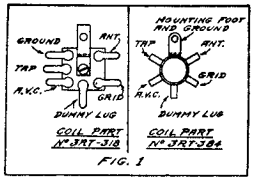

FIG. 1

Note: 3RT-384A lug arrangement is the same as 3RT-384.

ADJUSTMENTS

An oscillator with frequencies of 456, 600 and 1400 kc should be used.

An output meter should be used across the voice coil or output transformer for observing maximum response.

The set's oscillator is higher in frequency than the signal, so images should be observed on the low frequency side of the signals.

The last motion in adjusting trimmers should always be a tightening one, not a loosening one.

Never leave a trimmer with the outside plate so loose that there is no tension on the screw. Either bend the plate up or remove the screw entirely.

Always use as weak a test signal as possible during alignment.

Use a .0001 mf mica condenser as a dummy antenna during alignment.

Location of Coils and Trimmer Adjustments

The two i-f transformers are in oblong coil cans located on top of the chassis deck. The first i-f transformer is the one behind the variable condenser. The trimmers for these transformers are accessible through holes in the tops of the cans.

The 456 kc wave-trap is mounted on the right side of the front chassis wall. Its trimmer is accessible at the bottom of the chassis.

The antenna coils for the broadcast and police bands are wound on one form and are mounted underneath the chassis deck below the variable condenser.

The oscillator coils for the broadcast and police bands are wound on one form and are mounted on the rear wall of the chassis deck near the variable condenser.

The trimmers for the broadcast antenna and oscillator coils are located on the variable condenser. The trimmer on the front section is for the antenna coil.

I-f Transformer and Wave-Trap Alignment

Turn the switch clockwise to the broadcast position and rotate the variable condenser to the minimum capacity position. Feed 456 kc to the grid cap of the 6A7 tube and adjust the four i-f trimmers for maximum response. Feed 456 kc to the antenna and adjust the wave-trap trimmer for *minimum* response. (See General Notes, No. 8.)

R-f Alignment

With the wave-band switch in the broadcast position, clockwise, set the dial pointer at 140. Feed 1400 kc through a .0001 mf condenser to the antenna lead and adjust first the oscillator trimmer (on rear section of variable condenser) then the antenna trimmer (on front section of variable condenser) for maximum response. The police band is self-tracking and does not require any adjustment.

GENERAL NOTES

1. If replacements are made or the wiring disturbed in the r-f portion of the circuit, the receiver should be carefully re-aligned.
2. One side of the power line is directly grounded to the chassis base. Under no circumstances, therefore, should a ground wire be permitted to come in contact with any metal part of the receiver.
3. The filament dropping resistor (R12 on schematic) is in a special tube at the rear of the chassis. This tube will become quite hot under normal operating conditions. For voltage drop specifications, see below.
4. When operating the receiver on d.c. it may be necessary to reverse the line plug to obtain the correct polarity.
5. The two i-f transformers are held to the chassis by snap-on fasteners. To remove an i-f, unsolder its leads under the chassis, pinch together the prongs of the snap-on fastener and lift the i-f can from the chassis.
6. The color coding of the i-f transformer leads is as follows:
   Grid—green Plate—blue
   Grid return—black B plus—red
7. The receiver is shipped with an attached antenna wire. In some locations near powerful local stations the addition of a very large antenna may be detrimental to reception, because of the resulting interference. The Emerson Flexible Mast Antenna, Model W-82, has been especially designed for Emerson receivers, featuring compactness and portability while at the same time retaining a high efficiency from the standpoint of performance. Since it functions as an outside antenna the Flexible Mast will substantially improve the receiver performance. Where the Flexible Mast is installed permanently, it is urgently recommended that the receiver antenna wire be cut. Leave just enough of this wire to reach from the receiver to the window strip connector. Instructions for the installation of this compact and efficient outside antenna are supplied with each kit.
8. The wave-trap in the receiver has been adjusted for maximum signal rejection at 456 kc. If, however, persistent interference is experienced from some particular telegraphic station, readjust the wave-trap trimmer until the response from the interfering station is at a minimum.
9. The phonograph motor has been adjusted at the factory, to turn at a speed of 78 r.p.m. The speed may be checked by counting the turns per minute or by using a stroboscope disc and a neon light (the stroboscope method will only work when the neon bulb is lighted from a 60 cycle a.c. supply).
10. An a.c.-d.c. switch is provided to switch the motor for a.c. or d.c. power supply. It is important that this switch be in the proper position for the power supply available.

EMERSON RADIO & PHONO. CORP. MODELS AP165, AP166, Chassis AP AP177 Schematic

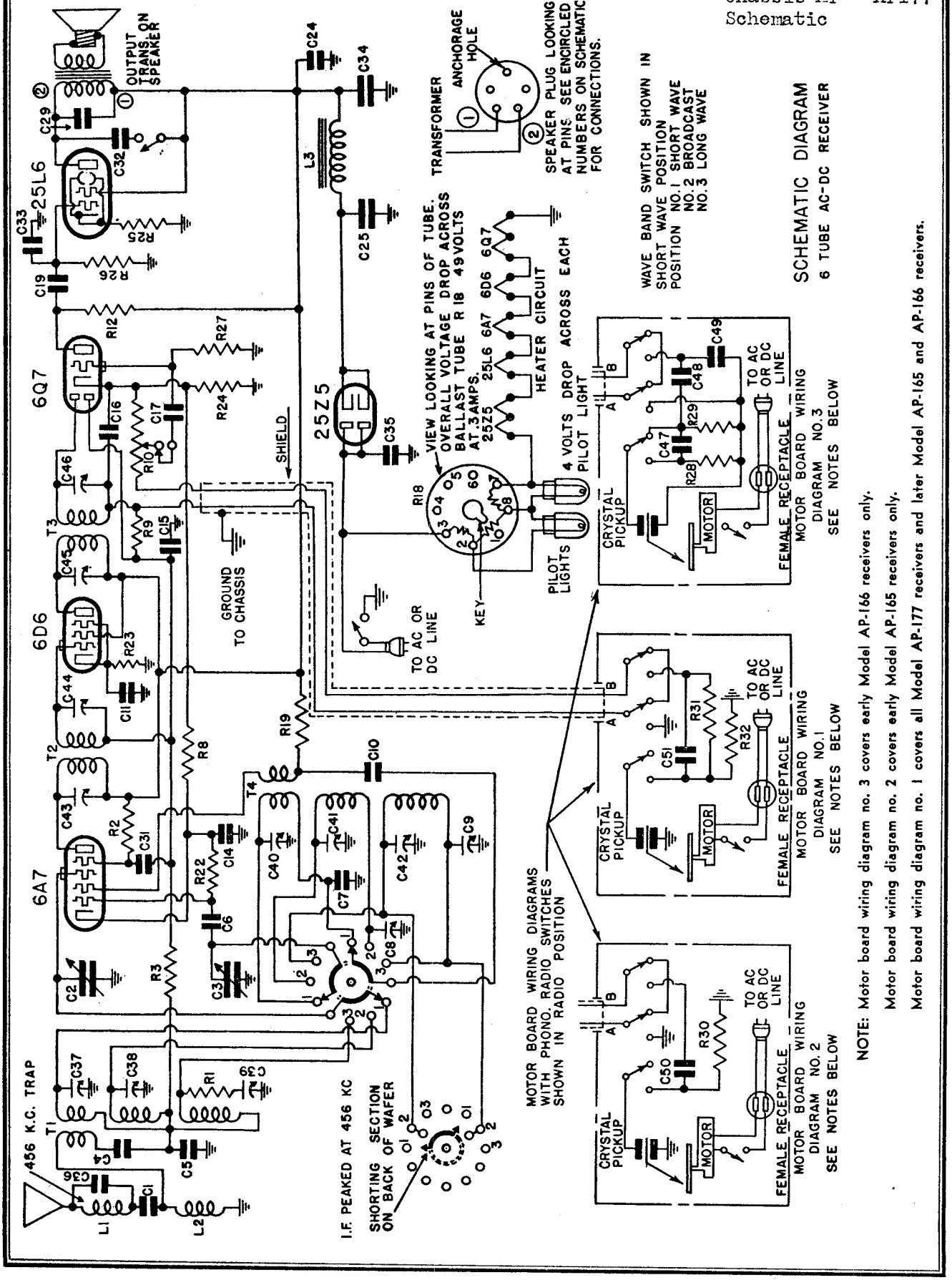

NOTE: Motor board wiring diagram no. 3 covers early Model AP-166 receivers only.

Motor board wiring diagram no. 2 covers early Model AP-165 receivers only.

Motor board wiring diagram no. 1 covers all Model AP-177 receivers and later Model AP-165 and AP-166 receivers.

©John F. Rider, Publisher

MODELS AP165, AP166, AP177
Chassis AP
Alignment, Changes, Parts
Voltage

EMERSON RADIO & PHONO. CORP.

REPLACEMENT PARTS LIST

*Item	Part No.	DESCRIPTION	PRICE
L1	2ZT-268A	456 kc wave-trap	.75
L2	3ET-299	R-f choke—5 millihenries	.55
‡L3	4PT-404	Iron core filter choke	1.80
T1	3ET-297	Three-band antenna coil	2.05
T2	2NT-230	456 kc first i-f transformer	1.35
T3	2NT-231	456 kc second i-f transformer	1.35
T4	3ET-298	Three-band oscillator coil	1.90
R1	TTR-201	3,000 ohm 1/4 watt carbon resistor	.16
R2	3ER-263	60,000 ohm 1/4 watt carbon resistor	.16
R3, R12	KR-55	250,000 ohm 1/4 watt carbon resistor	.16
R8	AAR-119	300 ohm 1/2 watt wire-wound resistor	.16
R9, R27, R31	KR-57	1 megohm 1/4 watt carbon resistor	.16
R10	2NR-214D	Volume control with switch—250,000 ohms	1.20
R18	3CR-241	Plug-in type ballast resistor	.80
R19	LR-60	20,000 ohm 1/4 watt carbon resistor	.16
R22	KR-54	100,000 ohm 1/4 watt carbon resistor	.16
R23	3CR-295	410 ohm 1/2 watt wire-wound resistor	.16
R24	3CR-294	240 ohm 1/2 watt wire-wound resistor	.16
R25	3FR-293	140 ohm 1/2 watt wire-wound resistor	.16
R26, R28, R29, R30	KR-56	500,000 ohm 1/4 watt carbon resistor	.16
R32	LR-61	200,000 ohm 1/4 watt carbon resistor	.16
C1, C4, C10, C17	FC-29	0.02 mf, 200 volt tubular condenser	.20
‡C2, C3	4PC-366	Two-gang variable condenser	4.00
C5	2ZC-253	0.0025 mf mica condenser	.30
C6	AAC-106A	0.00005 mf mica condenser	.20
C7	3EC-286	0.0024 mf mica condenser	.30
C8, C9	4AC-362	Dual adjustable padding condenser C8—250 to 500 mmf. C9—65 to 130 mmf.	.50
C11, C14, C24	AC-6	0.1 mf, 200 volt tubular condenser	.20
C15	BC-12	0.05 mf, 200 volt tubular condenser	.20
C16, C33	AC-7A	0.00025 mf mica condenser	.20
C19	LC-65	0.02 mf, 400 volt tubular condenser	.20
‡C25	3CC-261	20 mf, 150 volt wet electrolytic condenser	.90
C29	QQC-173	0.015 mf, 600 volt tubular condenser	.20
C31	KC-58	0.01 mf, 400 volt tubular condenser	.20
C32	EC-23	0.03 mf, 400 volt tubular condenser	.20
‡C34	3CC-337	40 mf, 150 volt wet electrolytic condenser	.90
C35	3EC-326A	0.05 mf, 400 volt molded type paper condenser	.20
†C36		0.0015 mf mica condenser, part of wave trap assembly.	
†C37, C38, C39		Trimmer, part of antenna coil assembly.	
†C40, C41, C42		Trimmer, part of oscillator coil assembly.	
†C43, C44		Trimmer, part of first i-f transformer assembly.	
†C45, C46		Trimmer, part of second i-f transformer assembly.	
C47, C48, C50, C51	3HC-274	0.002 mf, 600 volt tubular condenser	.20
C49	IC-47A	0.0005 mf mica condenser	.20
	‡4PS-303	6½" permanent magnet dynamic speaker	7.35
	‡4PS-304	10" permanent magnet dynamic speaker	10.75
	3ES-218	Wave-band switch	1.10
	3ES-256	Tone-control switch	.50
	‡4RS-301	Automatic stop for motor	2.50
	3LS-211	Phono-radio switch	1.00
	3GPM-1	110 volt a.c.-d.c. phonograph motor complete with accessories	45.00
	3ZZ-564	Crystal pickup	18.00
	4RZ-685	Phonograph record album	2.10
	‡4BL-94	Pilot light, 6.3 volt, .25 amp., Mazda No. 44, bayonet base	.20
	4PZ-615	Dial face	1.20
	‡3LZ-403A	Dial drive belt	.20
	‡4FZ-602	Dial drive shaft and pulley	.20
	3CZ-339	Idler pulley	.05
	‡4FZ-603	Idler pulley spring	.10
	‡4UZ-604	Condenser shaft pulley	.15
	4RZ-592	Dial pointer	.25
	4RZ-595	Escutcheon with crystal	1.95

List Price as Effective as of Nov. 15th, 1937 (Subject to change without notice.)

VOLTAGE ANALYSIS

Readings should be taken with a 1000 ohms-per-volt meter. Voltages listed below are from point indicated to ground (chassis) with the volume control turned on full and no signal. Line voltage for these readings was 117.5 volts, 60 cycles, a.c. Measurements made with 117.5 volts, d.c. will be lower than those given below.

The following are voltages for receivers using permanent magnet dynamic speakers (serial numbers above 1,291,800):

Tube	Plate	Screen	Cathode	Osc. Plate	Fil.
6A7	118	38	2.0	76	6.3
6D6	118	115	4.2	—	6.3
6Q7	45	—	1.0	—	6.3
25L6	108	115	8.0	—	25
25Z5	—	—	130.0	—	25

Voltage across filter choke—12 volts.
Voltage across resistors in ballast tube—49 volts.
Voltage across each pilot light section in ballast tube—4 volts.

The following are voltages for receivers using electro-dynamic speakers (serial numbers below 1,291,800):

Tube	Plate	Screen	Cathode	Osc. Plate	Fil.
6A7	110	34	2.4	67	6.3
6D6	110	110	4.2	—	6.3
6Q7	45	—	1.2	—	6.3
25L6	100	110	7.0	—	25
25Z5	—	—	135.0	—	25

Voltage across speaker field—25 volts.
Voltage across resistors in ballast tube—49 volts.
Voltage across each pilot light section in ballast tube—4 volts.

PRODUCTION CHANGES

1. Model AP-165 receivers differ from the schematic diagram as follows:
   a. C25 is a 12 mf, 200 volt dry electrolytic condenser, part no. 4PC-364, price $1.55
   b. C34 is a 24 mf, 200 volt dry electrolytic condenser, part no. 4PC-363, price 1.75
2. Receivers bearing serial numbers below 1,291,850 do not use the automatic stop. A manual switch, part no. 3LS-232, is used instead—price $.70.
3. Receivers bearing serial numbers below 1,291,800 use electro-dynamic speakers. The speaker field is used in place of the filter choke L3. The 6½" speaker is part no. 4PS-271. The 10" speaker is part no. 4PS-299.
4. Receivers bearing serial numbers below 1,292,600 use the following parts instead of the corresponding parts indicated on the previous page:

Part No.	DESCRIPTION	Price
4HC-343A	Variable condenser	$3.65
3LZ-403	Dial drive belt	.15
3CZ-337B	Dial drive shaft and pulley	.10
4HZ-562	Idler pulley spring	.05
3CZ-341	Condenser shaft pulley	.10
XL-9	Pilot light, 6.3 volt, .25 amp., Mazda No. 46, screw type base	.20

ADJUSTMENTS

An oscillator with frequencies of 150, 350, 456, 600, 1500 and 15,000 kc should be used.

An output meter should be used across the voice coil or output transformer for observing maximum response.

Use a standard dummy antenna when aligning either the long-wave or medium-wave bands. A .0002 mf condenser may be used as a substitute. When aligning the short-wave band use a 400 ohm dummy antenna (a 400 ohm resistor in series with antenna lead).

Always choose the minimum capacity peak on oscillator trimmers and maximum capacity peaks on antenna trimmers. The last motion in adjusting trimmers should always be a tightening one, not a loosening one.

Always use as weak a test signal as possible during alignment.

Never leave a trimmer with its outside plate so loose that there is no tension on the screw. Either bend the plate up or remove the screw entirely.

Location of Coils and Trimmers

The two i-f transformers are located on top of the chassis deck. The second i-f transformer is the one directly behind the variable condenser. The four trimmers, two for each transformer, are accessible through holes in the tops of the cans.

The dual adjustable padding condenser is mounted on the left side of the front chassis wall.

The antenna coils for the three bands are wound on one form and mounted underneath the chassis deck directly behind the adjustable padding condenser. The trimmers for these coils are accessible through holes in the top of the chassis. The trimmer nearest the front of the chassis is the medium-wave antenna trimmer. The central trimmer is the short-wave antenna trimmer. The trimmer farthest from the front of the chassis is the long-wave antenna trimmer.

The oscillator coils for the three bands are wound on one form and mounted underneath the chassis deck near the variable condenser. The trimmers for these coils are also accessible through holes in the top of the chassis. The trimmer nearest the front of the chassis is the medium-wave oscillator trimmer. The central trimmer is the short-wave oscillator trimmer. The trimmer farthest from the front of the chassis is the long-wave oscillator trimmer.

I-f Alignment

Rotate the wave-band switch to the medium-wave (central) position and set the variable condenser to minimum. Feed 456 kc to the grid cap of the 6A7 tube. Adjust the four i-f trimmers for maximum response.

Long-Wave Alignment

With the wave-band switch at long-wave (clockwise) position set the dial pointer at 150 and feed 150 kc to antenna. Adjust the long-wave series padder (hex nut on dual padder) for maximum response. Move pointer to 350 and feed 350 kc to antenna. Adjust the long-wave oscillator trimmer then the long-wave antenna trimmer for maximum response. Reset pointer to 150, feed 150 kc and rock (rotate back and forth through a small arc) the variable condenser while adjusting long-wave series padder for maximum response. Reset pointer to 350, feed 350 kc and check alignment. If readjustment is necessary return to 150 kc and repeat entire procedure.

Medium-Wave Alignment

Set switch at medium-wave (central) position and dial pointer at 600. Feed 600 kc to antenna and adjust medium-wave series padder (slotted screw on dual padder) for maximum response. Move pointer to 1500, feed 1500 kc and adjust medium-wave oscillator trimmer and then the medium-wave antenna trimmer for maximum response. Reset pointer to 600 feed 600 kc and rock variable condenser while readjusting medium-wave series padder for maximum response. Reset pointer to 1500, feed 1500 kc and check alignment. If readjustment is necessary return to 600 and repeat entire procedure.

Short-Wave Alignment

Set wave-band switch at short-wave (counter-clockwise) position. Set pointer at 15, feed 15 megacycles to antenna and adjust short-wave oscillator trimmer and then short-wave antenna trimmer for maximum response.

Voltage rating .... **105-125 volts, a.c. or d.c.**
Current drain .... **0.4 amperes for receiver and 0.2 amperes for motor.**
Frequency range .... **150 to 375 kc, 540 to 1600 kc, 5.7 to 17.5 mc.**

One side of the power line is directly grounded to the chassis base. Under no circumstances, therefore, should a ground wire be permitted to come in contact with any metal part of the receiver.

When operating the receiver on d.c., it may be necessary to reverse the line plug for correct polarity.

When replacing the chassis in the cabinet take precautions to keep any part of the dial and condenser assembly from touching the cabinet, otherwise microphonism will result.

The color coding of the i-f transformers is as follows:

Grid—green · Grid return—black
B plus—red · Plate—blue

The phonograph motor has been adjusted at the factory, to turn at a speed of 78 r.p.m. The speed may be checked by counting the turns per minute or by using a stroboscope disc and a neon light (the stroboscope method will work only when the neon bulb is lighted from a 60 cycle a.c. supply).

An a.c.-d.c. switch is provided to switch the motor for a.c. or d.c. power supply. It is important that this switch be in the proper position for the power supply available.

©John F. Rider, Publisher

EMERSON RADIO & PHONO. CORP

MODELS AR165,-166,-177
Chassis AR,Early,Late
Above,below Ser.1326200
Schematics,Changes,Parts

*Item number locates the article on the schematic diagram.
†See production changes.
‡These trimmer condensers are part of the coil assemblies and can not be supplied separately. (Subject to change without notice)

List Prices effective October 1st, 1957

REPLACEMENT PARTS

*ITEM Schematic No. 1	Schematic No. 2	PART No.	DESCRIPTION	PRICE
T1, L1	T1, L1	3CT-289A	Two band antenna coil and 456 kc wave-trap	$1.80
T2	T2	3CT-290A	Two band oscillator coil	1.35
T3	T3	3ZT-342	456 kc first i-f transformer	1.50
T4	T4	2NT-231	456 kc second i-f transformer	1.35
T5	T5	3ZT-345	Power transformer	4.45
R1, R15	R1	KR-53	50,000 ohm ¼ watt carbon resistor	.16
R2	R2	3BR-247	40,000 ohm ¼ watt carbon resistor	.16
R3	R3	LR-65	10,000 ohm ¼ watt carbon resistor	.16
R4	R4	BR-12	25,000 ohm 1 watt carbon resistor	.16
R5	R5	3LR-266	40,000 ohm ½ watt carbon resistor	.16
R6	R6	NNR-220	3 megohm ¼ watt carbon resistor	.16
R7	R7	HR-42	2 megohm ¼ watt carbon resistor	.16
R8	R8	3ZR-258	Volume control with line switch—500,000 ohms	1.05
R9	R9	3VR-270	90 ohm ½ watt wire-wound resistor	.16
R10	R10	3RR-274	5 megohm ¼ watt carbon resistor	.16
R11	R11	4RR-316	210 ohm 1 watt wire-wound resistor	.16
R12, R14	R12,	KR-54	100,000 ohm ¼ watt carbon resistor	.16
	{ R13, R23 }	KR-56	500,000 ohm ¼ watt carbon resistor	.16
R13	{ R24, R25 }	3AR-250	3,500 ohm ¼ watt carbon resistor	.16
	R14	LLR-154	75,000 ohm ¼ watt carbon resistor	.16
	R15	KR-55	250,000 ohm ¼ watt carbon resistor	.16
	R17	3RR-275	10 megohm ¼ watt carbon resistor	.16
	R18	4RR-319	175 ohm 1 watt wire-wound resistor	.16
	R19, R21	3CR-281	45 ohm ½ watt wire-wound resistor	.16
	R20	KR-57	1 megohm ¼ watt carbon resistor	.16
	R22	4HC-343A	Two-gang variable condenser	8.65
†C1, C2	†C1, C2, C6	AAC-106A	Trimmer, part of antenna coil.	
†C3, C5, C6	C4, C8	BC-12	0.00005 mf mica condenser	.20
C4, C8	C7, C19		0.05 mf, 200 volt tubular condenser	.20
C7, C19	‡C9, C10	KC-58	Trimmer, part of oscillator coil.	
‡C9, C10	C11, C14	2NC-231	0.01 mf, 400 volt tubular condenser	.20
C11, C14	C12	3EC-267	Single adjustable padding condenser. Range: 300 to 600 mmf.	.20
C12	C13		0.0042 mf mica condenser	.40
C13	‡C15, C16		Trimmer, part of first i-f transformer.	
‡C15, C16	‡C17, C18		Trimmer, part of second i-f transformer.	
‡C17, C18	C20	AC-7A	0.00025 mf mica condenser	.20
C20	C21	HC-34	0.006 mf, 600 volt tubular condenser	.20
C21	C22	IC-47	0.0005 mf mica condenser	.20
C22		LC-65	0.02 mf, 400 volt tubular condenser	.20
	C23	ZC-115	0.006 mf, 1000 volt tubular condenser	.20
C23	C24	2TC-189	0.015 mf, 1000 volt tubular condenser	.20
C24	C25	EEC-132	0.1 mf, 400 volt tubular condenser	.20
C25	C26	2NC-246	16 mf, 450 volt wet electrolytic condenser	.120
C26	†C27	2NC-247	16 mf, 405 volt wet electrolytic condenser	.120
†C27	†C28	3LC-297A	0.01 mf, 400 volt molded type paper condenser	.20
†C28	C29	LLC-150	0.004 mf, 600 volt tubular condenser	.20
C29	C30	BC-13	0.25 mf, 200 volt tubular condenser	.20
C30	C31	AC-6	0.1 mf, 200 volt tubular condenser	.20
C31	C32	EC-23	0.03 mf, 400 volt tubular condenser	.20
C32	C33, C35	FC-29	0.02 mf, 200 volt tubular condenser	.20
C33, C35	C34	3HC-274	0.002 mf, 600 volt tubular condenser	.20
C34	C37, C38	IC-47A	0.0005 mf mica condenser	.30
C37, C38	C39	†TS-111K	Wave-band switch	.60
C39		†3ES-256	Tone control switch	.50
		†4RS-301	Automatic stop for motor	2.50
		3LS-211	Phono-radio switch	1.00
		†4RS-297	6½ dynamic speaker	5.75
		†4RS-298	Pilot light, 6.3 volt, .25 amp. Mazda No. 46	8.75
		3LPM-3	110 volt a.c. phonograph motor	.20
		3ZZ-564	Crystal pick-up	23.45
		4RZ-685	Phonograph record album	18.00
		†4FZ-596A	Dial face (formerly 4FZ-596)	2.10
		3LZ-403A	Dial drive belt	1.20
		3CZ-337B	Dial drive shaft and pulley	.15
		3CZ-339	Idler pulley	.10
		4HZ-562	Idler pulley spring	.05
		3CZ-341	Condenser shaft pulley	.10
		4RZ-592	Dial pointer	.25
		3SZ-436C	Escutcheon with crystal	1.95

(*Note*: When this escutcheon is ordered, four screws, part No. 4TMS-159, must also be ordered. The old escutcheon, part No. 4RZ-595, did not require these screws.)

PRODUCTION CHANGES-RECEIVERS BEARING SERIAL NUMBERS BELOW 1327843 DID NOT USE THE AUTOMATIC STOP. A MANUAL SWITCH (PART NO.315—232)WAS USED INSTEAD(PRICE—$.70).

OTHER CHANGES - SAME AS MODEL AR-171

GENERAL NOTES,ADJUSTMENTS,ALIGNMENT ---SAME AS MODEL AR-171

The following are voltages for receivers using a single 41 output tube: BELOW SER.NO.1326200

Tube	Plate	Screen	Cathode	Osc.Plate	Fil.
6A7	244	62	0	118	6.3 a.c.
6D6	244	85	0	—	6.3 a.c.
76	0	—	0	—	6.3 a.c.
76 a-f	85	—	0	—	6.3 a.c.
41	226	244	0	—	6.3 a.c.

Voltage across speaker field—65.

Voltage at 80 filament to B minus (center-tap of high-voltage winding on power transformer)—325.

The grid bias for all the tubes is developed across the resistors R9 and R11 (see schematic No. 1). The total voltage measured across R9 and R11 should be 15 volts, and is the bias for the 41 tube. The voltage measured across R9 should be 5 volts. To check the bias on the 6A7 and 6D6 tubes, measure the values of resistors R6, R7 and R8 (see schematic).

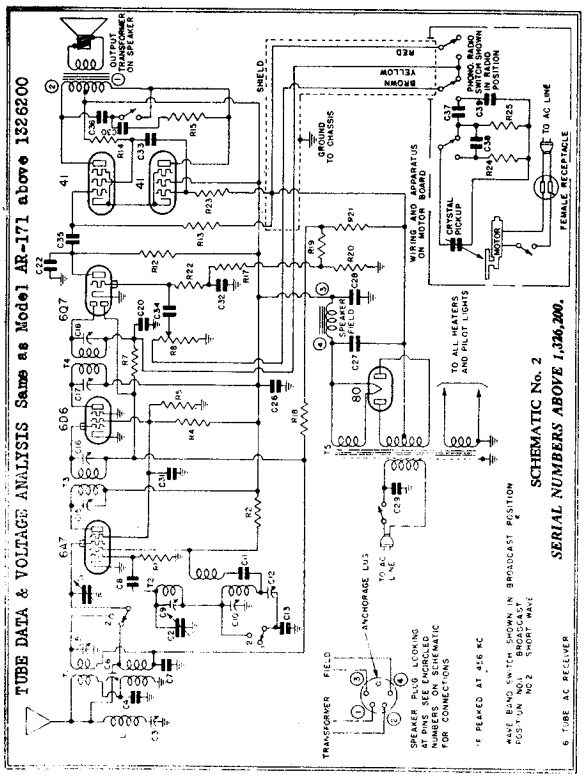

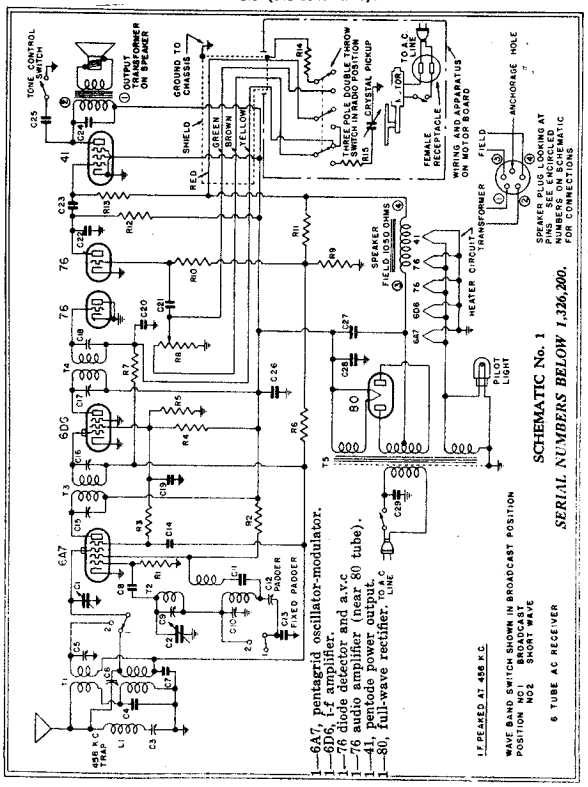

MODELS AR-165,AR-166,AR-177 CHASSIS MODEL AR 105-125 VOLTS 60 CYCLE A.C.
540-1730 K.C. & 5.6-18 MEGACYCLES 55WATTS FOR RECEIVER-20WATTS FOR MOTOR

©John F. Rider, Publisher

MODELS AR165,-166,-177
MODELS AR171,-173,-174
-176,-180,-185

EMERSON RADIO & PHONO. CORP.

Chassis AR, Between Ser. 1412601-1413601, Above Ser. 1416650, 3rd Type
Schematics, Voltage

1—6A7, pentagrid oscillator-modulator.
1—6D6, i-f amplifier.
1—6Q7G, diode detector, audio amplifier and a.v.c.
1—76, audio amplifier.
1—6AC5G, power output.
1—80, full-wave rectifier.

Model AR serial numbers between 1,412,601 and 1,413,601, and above 1,416,650. These receivers use a 6AC5G output tube.

Voltage rating ..... 105-125 volts, 60 cycle, a.c.
Power consumption .. 55 watts for receiver and 20 watts for motor
Frequency ranges .. 540 to 1730 kc and 5.6 to 18 megacycles.

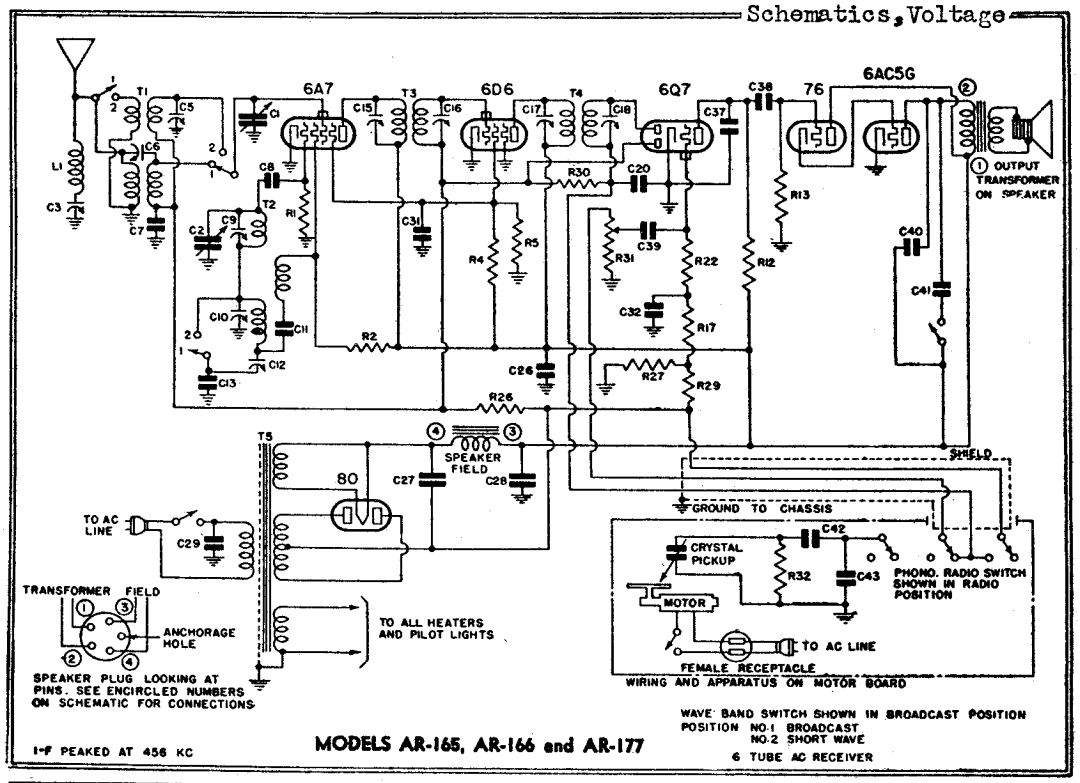

MODELS AR-165, AR-166 and AR-177

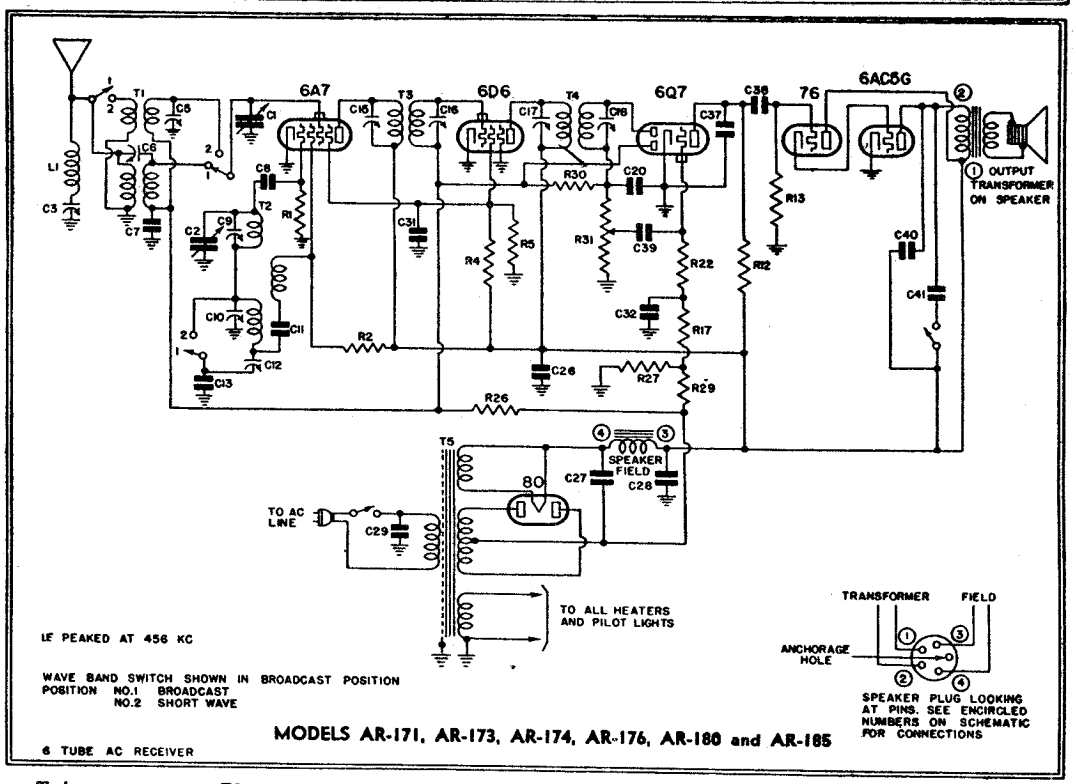

MODELS AR-171, AR-173, AR-174, AR-176, AR-180 and AR-185

VOLTAGE ANALYSIS

Readings should be taken with a 1000 ohms-per-volt meter. Voltages listed below are from point indicated to ground (chassis) with the volume control turned on full and no signal. Line voltage for these readings was 117.5 volts, 60 cycles, a.c. All readings except B plus at rectifier, heaters, and cathode voltages were taken on 250 volt scale.

Tube	*Plate*	*Screen*	*Cathode*	*Osc. Plate*	*Fil.*
6A7	250	80	0	100	6.3 a.c.
6D6	250	80	0	—	6.3 a.c.
6Q7G	175	—	0	—	6.3 a.c.
76	250	—	12	—	6.3 a.c.
6AC5G	220	—	0	—	6.3 a.c.

Voltage at 80 filament to B minus (center tap of high voltage winding on power transformer)—325 volts.
Voltage across speaker field—75 volts.
The grid bias for all tubes is developed across resistors R-27 and R-29 (see schematic). The total voltage measured across R-27 and R-29 should be 15 volts.

©John F. Rider, Publisher

CHASSIS "AR" (using 6AC5G tubes)

REPLACEMENT PARTS

List Price Effective as of March 1st, 1938 (Subject to change without notice)

*Item	Part No.	DESCRIPTION	PRICE
T1	4RT-418	Two-band antenna coil (see production changes)	$1.75
T2	3CT-290A	Two-band oscillator coil	1.35
T3	3ZT-342	456 kc first i-f transformer	1.50
T4	2NT-231	456 kc second i-f transformer	1.35
T5	3ZT-345	Power transformer	4.45
L1		456 kc wave trap (part of T1).	
C1, C2	4PC-366	Two-gang variable condenser	4.00
‡C3, C5, C6		Trimmers; part of antenna coil.	
C7, C32	AC-6	0.1 mf, 200 volt tubular condenser	.20
C8	AAC-106A	0.00005 mf mica condenser	.20
‡C9, C10		Trimmers; part of oscillator coil.	
C11, C40	KC-58	0.01 mf, 400 volt tubular condenser	.20
C12	2NC-231	Single adjustable padding condenser. Range: 300 to 600 mmf.	.50
C13	3EC-267	0.0042 mf mica condenser	.40
‡C15, C16, C17, C18		Trimmers; part of i-f transformer.	
C20, C37	AC-7A	0.00025 mf mica condenser	.20
C26	EEC-132	0.1 mf, 400 volt tubular condenser	.20
C27	2NC-246	16 mf, 450 volt wet electrolytic condenser (see production changes)	1.20
C28	2NC-247	16 mf, 405 volt wet electrolytic condenser (see production changes)	1.20
C29	3LC-297A	0.01 mf, 400 volt molded type paper condenser	.20
C31	BC-13	0.25 mf, 200 volt tubular condenser	.20
C33	EC-23	0.03 mf, 400 volt tubular condenser	.20
C39	FC-29	0.02 mf, 200 volt tubular condenser	.20
C41	4DC-349	0.04 mf, 400 volt tubular condenser	.20
C42	3HC-274	0.002 mf, 600 volt tubular condenser	.20
C43	IC-47A	0.0005 mf mica condenser	.20
R1	KR-53	50,000 ohm, 1/4 watt carbon resistor	.16
R2	3BR-247	40,000 ohm, 1/4 watt carbon resistor	.16
R4	BR-12	25,000 ohm, 1 watt carbon resistor	.16
R5	3LR-265	40,000 ohm, 1/2 watt carbon resistor	.16
R12	KR-54	100,000 ohm, 1/4 watt carbon resistor	.16
R13, R32	KR-56	500,000 ohm, 1/4 watt carbon resistor	.16
R17	KR-55	250,000 ohm, 1/4 watt carbon resistor	.16
R22, R30	KR-57	1 megohm, 1/4 watt carbon resistor	.16
R26	3RR-274	5 megohm, 1/4 watt carbon resistor	.16
R27	3CR-281	45 ohm, 1/2 watt wire-wound resistor	.16
R29	3ZR-289	210 ohm, 1/2 watt wire-wound resistor	.16
R31	2NR-214D	Volume control with line switch—250,000 ohms	1.20
	3LS-211	Phono-Radio switch	1.00
	4RS-301	Automatic stop for motor	2.50
	3ES-256	Tone control switch	.50
	4RS-314	Wave-band switch (see production changes)	.60
	4RS-306	6½" dynamic speaker (see production changes)	5.70
	4TS-281	10" dynamic speaker	8.60
	4BL-94	Pilot light, 6.3 volt, .25 amp. Mazda No. 44, bayonet type base	.20
	4RZ-735	Dial face	1.20
	3LZ-403A	Dial drive belt	.20
	4FZ-602	Dial drive shaft and pulley	.20
	3CZ-339	Idler pulley	.05
	4FZ-603	Idler pulley spring	.10
	4UZ-604	Condenser shaft pulley	.15
	4RZ-592	Dial pointer	.25
	3SZ-438C	Escutcheon with crystal (Note: When this escutcheon is ordered, four screws, part no. 4BMS-157, must also be ordered. The old escutcheon, part no. 4RZ-595, did not require these screws.)	1.95
	3LPM-3	110 volt a.c. phonograph motor	23.45
	3ZZ-564	Crystal pickup	18.00
	4RZ-685	Phonograph record album	2.10

PRODUCTION CHANGES

In receivers bearing serial numbers between 1,412,601 and 1,413,601:
The variable condenser was part no. 4HC-343A.
Models AR-174 and AR-165 receivers differ from the schematic diagram as follows:
a. C27 is a 12 mf, 450 volt dry electrolytic condenser part no. 3LC-314.
b. C28 is a 24 mf, 400 volt dry electrolytic condenser part no. 3ZC-341.
c. A .25 mf, 200 volt condenser is connected from the screen grid of the 6D6 i-f amplifier to ground.
In receivers bearing serial numbers below 1,473,933:
The antenna coil was part no. 3CT-289A.
The wave-band switch was part no. TTS-111K.
In receivers bearing serial numbers below 1,477,899:
The 6½" speaker was part no. 4RS-270B.

FOR ADJUSTMENT OF AUTOMATIC DIAL ON CHASSIS "AT" MODELS--SEE INDEX

Alignment Procedure for Model AT

In order to align the Model AT, it will first be necessary to fasten a short, stiff piece of wire to a fixed part of the chassis in such a way that when the variable condenser is set at minimum capacity, the wire will point to the heavy vertical line at the high frequency end of the dial scale.

Thereafter, using this wire as an indicator, the alignment procedure will be the same as that outlined **above** for the Model AR.

Models AR165, AR166, AR177, AR171, AR173, AR174, AR176, AR180, AR185
Models AT170, AT172, AT181

GENERAL NOTES

1. The receiver should never be turned on with either the speaker plug or the 41 tube out of its respective socket, since the rapid rise in rectifier voltage will damage the electrolytic condenser.
2. When replacing the chassis in the cabinet take precautions to keep any part of the dial and condenser assembly from touching the cabinet, otherwise microphonism will result.
3. The color coding of the i-f transformers is as follows:
   Grid—green; Grid return—black
   B plus—red; Plate—blue.
4. The color coding of the power transformer is as follows:
   Primary—two black leads
   High-voltage secondary—two red leads
   High-voltage secondary center tap—red and yellow lead
   6.3 volt secondary—two green leads
   5 volt secondary—two yellow leads.
5. The adjustable padding condenser for the broadcast band is mounted underneath the chassis (in the corner near the wave-band switch) with the screw adjustment accessible through a hole in the top of the chassis. The short-wave band has a fixed padder, C13 on schematic. When replacing this fixed padder be careful to use a condenser which has a capacity within 2% of the specified value, otherwise the short-wave coils may not track.
6. The wave-trap in the receiver has been adjusted for maximum signal rejection at 456 kc. If, however, persistent interference is experienced from some particular telegraph station the wave-trap trimmer may be readjusted until the response from the interfering station is at a minimum.
7. On the AT models, if for any reason the automatic dial assembly has been taken apart, care should be taken in re-aligning the circular button housing with the variable condenser. With the circular housing in the extreme clockwise position, the variable condenser should be about 5 degrees open from the maximum capacity position. (Five degrees is about 3/32" between the rotor plate tie-bar and the edges of the stator plates on the variable condenser.)

The phonograph motor has been adjusted at the factory to turn at a speed of 78 r.p.m. The speed may be checked by counting the turns per minute or by using a stroboscope disc and a neon light. To readjust the speed remove the turn-table and turn the speed adjusting screw (located near the turn-table shaft). A clockwise rotation of the screw decreases the speed. The speed should be checked with the pick-up and record in playing position.

ADJUSTMENTS

An oscillator with frequencies of 456, 600, 1600 and 16,000 kc should be used.
An output meter should be used across the voice coil or output transformer for observing maximum response.
If the circuit is at all disturbed, both the broadcast and short-wave bands must be realigned.
The set's oscillator is higher in frequency than the signal, so images should be observed on the low frequency side of the signals.
Always choose the minimum capacity peak on oscillator trimmers and maximum capacity peaks on antenna trimmers. The last motion in adjusting trimmers should always be a tightening one, not a loosening one.
Never leave a trimmer with the outside plate so loose that there is no tension on the screw. Either bend the plate up or remove the screw entirely.
Always use as weak a test signal as possible during alignment.

Location of Coils and Trimmer Adjustments

The two i-f transformers are located on top of the chassis deck. The second i-f is the one directly behind the variable condenser. The four trimmers, two for each transformer, are accessible through holes in the tops of the cans.

The adjustable padding condenser for the broadcast band is mounted underneath the chassis (in the corner near the 6A7 tube) with the screw adjustment accessible through a hole in the top of the chassis.

The antenna coils for the broadcast and short-wave bands and the 456 kc wave trap are wound on one form and mounted underneath the chassis deck directly behind the adjustable padding condenser. The trimmers for these coils are accessible through holes in the top of the chassis. The trimmer nearest the front of the chassis is the short-wave antenna trimmer. The central trimmer is the broadcast antenna trimmer. The trimmer nearest the rear of the chassis is the 456 kc wave trap.

The oscillator coils for the broadcast and short-wave bands are wound on one form and mounted underneath the chassis deck near the variable condenser. The trimmers for these coils are accessible through holes in the top of the chassis. The trimmer nearest the front of the chassis is for the short-wave oscillator coil and the trimmer farthest from the front is for the broadcast oscillator coil.

I-f and Wave-trap Alignment

Rotate the wave-band switch to the broadcast (clockwise) position. Set the variable condenser at the minimum capacity position and feed 456 kc, through a 0.02 mf paper condenser, to the grid cap of the 6A7 tube (do not remove the grid clip from the tube). Adjust the four i-f trimmers for maximum response. Feed 456 kc to the antenna through a standard dummy antenna (a 0.0002 mica condenser may be substituted) and adjust the wave-trap trimmer (farthest from front on left side of the chassis) for *minimum* response. (See General Notes No. 7.)

Short-wave Alignment (Alignment of the short-wave band should precede broadcast alignment)

Use a 400 ohm dummy antenna (a 400 ohm non-inductive resistor in series with the test oscillator antenna lead) when aligning the short-wave coils. Rotate the wave-band switch to the short-wave (counter-clockwise) position, and set the dial indicator exactly at 16 megacycles. Feed 16,000 kc to the antenna and adjust the short-wave oscillator trimmer (nearest the front beside variable condenser) for maximum response, and then adjust the short-wave antenna trimmer (nearest the front on the left side of the chassis) for maximum response. Be very careful to choose the minimum capacity peak on the oscillator trimmer.

Broadcast Alignment

By adding a cipher to each figure on the broadcast band calibration, this scale can be made to read directly in kilocycles.

Use a standard dummy antenna in aligning the broadcast coils. (A .0002 condenser may be substituted.) Rotate the wave-band switch to the broadcast (clockwise) position. Set the dial indicator at 600 kc on the dial and feed 600 kc. Adjust the broadcast series padder (in corner near 6A7 tube) for maximum response. Move the dial pointer to 1600 kc on the dial and feed 1600 kc. Adjust the broadcast oscillator trimmer (farthest from front beside the variable condenser) for maximum response and then adjust the broadcast antenna trimmer (central trimmer at left side of chassis). Return pointer to 600, feed 600 kc and readjust the broadcast series padder, rocking the variable condenser (rotate the variable condenser shaft back and forth through a small arc) for maximum response.

©John F. Rider, Publisher

Chassis AR,2nd Type
Ser.1326200-1412601 **EMERSON RADIO & PHONO. CORP.**
Chassis AT,2nd Type

Above Ser.1386551
Schematic,Voltage
Changes,Parts

MODELS AR-171, AR-173, AR-174, AR-176, AR-180, AR-185
AND
MODELS AT-170, AT-172, AT-181

Chassis Models AR and AT

*Item Schematic No. 2	PART No.	DESCRIPTION	List Price as Effective as of Dec. 15th, 1937 (Subject to change without notice) PRICE
T1, L1	3CT-289A	Two band antenna coil and 456 kc wave-trap	$1.80
T2	3CT-290A	Two band oscillator coil	1.35
T3	3ZT-342	456 kc first i-f transformer	1.50
T4	2NT-231	456 kc second i-f transformer	1.35
T5	3ZT-345	Power transformer	4.45
R1	KR-53	50,000 ohm ¼ watt carbon resistor	.16
R2	3HR-247	40,000 ohm ¼ watt carbon resistor	.16
R4	LR-12	25,000 ohm 1 watt carbon resistor	.16
R5	3LR-265	40,000 ohm ½ watt carbon resistor	.16
R7	HR-42	2 megohm ¼ watt carbon resistor	.16
R8	1 3ZR-288 / 1 4TR-303	Volume control with line switch for chassis AR—500,000 ohms / Volume control with line switch for chassis AT—500,000 ohms	1.05 / 1.05
R12	KR-54	100,000 ohm ¼ watt carbon resistor	.16
R13, R23	KR-56	500,000 ohm ¼ watt carbon resistor	.16
R14	3AR-250	3,500 ohm ¼ watt carbon resistor	.16
R15	LLR-154	75,000 ohm ¼ watt carbon resistor	.16
R17	KR-55	250,000 ohm ¼ watt carbon resistor	.16
R18	3RR-275	10 megohm ¼ watt carbon resistor	.16
R19, R21	4RR-319	175 ohm 1 watt wire-wound resistor	.16
R20	3CR-281	45 ohm ½ watt wire-wound resistor	.16
R22	KR-57	1 megohm ¼ watt carbon resistor	.16
——	1 4HC-343A / 1 4TC-356	Two-gang variable condenser for chassis AR / Two-gang variable condenser for chassis AT	3.65 / 4.10
——	1 4PC-366 / 1 4TC-356	Two-gang variable condenser for chassis AR / Two-gang variable condenser for chassis AT	4.00 / 4.10
†C1, C2	——	Trimmer, part of antenna coil.	
†C3, C5, C6 C4, C8 C7	AAC-106A BC-12	0.00005 mf mica condenser / Trimmer, part of oscillator coil.	.20 / .20
†C9, C10 C11	—— KC-58	0.05 mf, 200 volt tubular condenser / 0.01 mf, 400 volt tubular condenser	.20 / .20
C12	2NC-231	Single adjustable padding condenser. Range: 300 to 600 mmf.	.50
C13	3EC-267	0.0042 mf mica condenser	.40
†C15, C16 †C17, C18	—— ——	Trimmer, part of first i-f transformer. / Trimmer, part of second i-f transformer.	
C20	AC-7A	0.00025 mf mica condenser	.20
C22	IC-47	0.0005 mf mica condenser	.20
C26	2TC-189	0.015 mf, 1000 volt tubular condenser	.20
C27	EEC-182	0.1 mf, 400 volt tubular condenser	.20
†C27	2NC-246	16 mf, 450 volt wet electrolytic condenser	1.20
†C28	2NC-247	16 mf, 475 volt wet electrolytic condenser	1.20
C29	3LC-297A	0.01 mf, 400 volt molded type paper condenser	.20
C30	LLC-150	0.004 mf, 600 volt tubular condenser	.20
C31	BC-13	0.25 mf, 200 volt tubular condenser	.20
C32	AC-6	0.1 mf, 200 volt tubular condenser	.20
C33, C35	EC-23	0.02 mf, 400 volt tubular condenser	.20
C34	EC-29	0.02 mf, 200 volt tubular condenser	.20
——	†3ES-256	Tone control switch for chassis AR	.50
——	†TS-145G	Tone control switch for chassis AT	.40
——	†TS-111K	Wave-band switch for chassis AT	.60
——	†4RS-302	6½" dynamic speaker (push-pull output)	7.00
——	†4RS-298	10" dynamic speaker (push-pull output)	8.75
——	†4BL-94	Pilot light, 6.3 volt, .25 amp., Mazda No. 44, bayonet type base	.20

Model AR Dial Parts

†4FZ-596A	Dial face (formerly 4FZ-596)	1.20	3YM-315
3LZ-403A	Dial drive belt	.15	3YM-328
3CZ-337B	Dial drive shaft and pulley	.10	3YZ-697
3CZ-339	Idler pulley	.05	4TZ-614A
4HZ-562	Idler pulley spring	.05	3YZ-544
4UZ-604	Condenser shaft pulley	.10	3YZ-546
4RZ-592	Dial pointer	.25	3YZ-547
3SZ-438C	Escutcheon with crystal (*Note:* When this escutcheon is ordered, four screws, part No. 4TMS-159, must also be ordered. The old escutcheon, part No. 4RZ-505, did not require these screws.)	1.95	3YZ-548
		No.	3YZ-618
		No.	3YZ-663
			3YZ-619
			3YZ-620
			3YZ-621
			3YZ-622
			3YZ-623
			3YZ-624
			3YZ-625
			3YZ-626A
			4TZ-682
			3RZ-480
			4TZ-626
			4TZ-611A

	Dial face frame		.50
	Drive disc and pulley		.60
	Circular button housing		.70
	Button with long-pin		.15
	Button with short-pin		.15
	Stop-vane		.02
	Thin metal button-holding disc		.10
	Station tabs (should be obtained from local Emerson dealer).		.40
	Dial scale		.25
	Bakelite front plate		.20
	Circular brass face nut		.05
	Stop pin for housing		.01
	Button spring		.10
	Stop-vane spring		.01
	Celluloid button caps		.15
	Guide rod		.10
	Pulley stud		.10
	Idler pulley		.15
	Vernier shaft		.10
	Knurled vernier-drive bushing		.15
	Flexible drive shaft		.66
	Main bearing bushing		.15
	Rubber drive bushing		.15
	Dial drive cord		.02
	Drive cord spring		.05
	Connecting link for wave-band switch		.65
	Escutcheon		.65

*Item number locates the article on the schematic diagram.
†See production changes.
†These trimmer condensers are part of the coil assemblies and can not be supplied separately.

SEE INDEX *for AR receivers bearing serial numbers below* 1,326,200 *and for AT receivers bearing serial numbers below* 1,386,551

The tube complement for AR receivers bearing serial numbers above 1,326,200 *and for AT receivers bearing serial numbers above* 1,386,551 *is as follows:*
2—41, push-pull pentode output. a.v.c.
1—80, full-wave rectifier.

VOLTAGE ANALYSIS

Readings should be taken with a 1000 ohms-per-volt meter. Voltages listed below are from point indicated to ground (chassis) with the volume control turned on full and no signal. Line voltage for these readings was 117.5 volts, 60 cycles, a.c.

Voltage rating ..... 105-125 volts, 60 cycles, a.c.
Power consumption ..... 55 watts
Frequency ranges ..... 540 to 1730 kc and 5.6 to 18 megacycles

The following are voltages for receivers using push-pull 41 output tubes:

Tube	Plate	Screen	Cathode	Osc.Plate	Fil.
6A7	250	82	0	126	6.3 a.c.
6D6	250	82	0		6.3 a.c.
6Q7-G	175		0		6.3 a.c.
41	245	240	0		6.3 a.c.
41 (in corner)	245	250	0		6.3 a.c.

Voltage across speaker field—65.

Voltage at 80 filament to B minus—315.

The grid bias for all the tubes is developed across the resistors, R19, R20 and R21 (see schematic No. 2). The total voltage measured across these three resistors should be 23 volts. The voltage across R19 and R20 should be 13 volts. The voltage across R20 should be 2.6 volts.

PRODUCTION CHANGES

MODEL AR RECEIVERS

In receivers bearing serial numbers below 1,326,200:
The 6½" speaker was part no. 4RS-270B.
The 10" speaker was part no. 4TS-281.
The tone control switch was part no. 2TS-146E.
The pilot light was part no. XL-9.
In receivers bearing serial numbers between 1,393,870 and 1,326,200:
The 6½" speaker was part no. 4RS-297.
The variable condenser was part no. 4HC-343A.
In receivers bearing serial numbers below 1,393,870:
The pilot light was part no. XL-9.
In receivers bearing serial numbers between 1,200,100 and 1,413,861:
The variable condenser was part no. 4HC-343A.

MODEL AT RECEIVERS

In receivers bearing serial numbers below 1,386,551:
The pilot light was part no. XL-9
The 6½" speaker was part no. 4RS-270B.
The 10" speaker was part no. 4TS-281.
The tone control switch was part no. 2TS-146E.
In receivers bearing serial numbers below 1,387,000:
The 6½" speaker was part no. 4RS-297.

SCHEMATIC applies to AR receivers bearing serial numbers above 1,326,200 and AT receivers bearing serial numbers above 1,386,551.

NOTE: For AR receivers bearing serial numbers between 1,412,601 and 1,413,601, and above 1,416,650, see separate service notes. These receivers use a 6AC5G output tube.

NOTE: For adjustment of the Automatic Dial on the AT models see INDEX

©John F. Rider, Publisher

MODELS AW171,-173,
-174,-176,-180,-185

EMERSON RADIO & PHONO. CORP

Chassis AW
Schematic

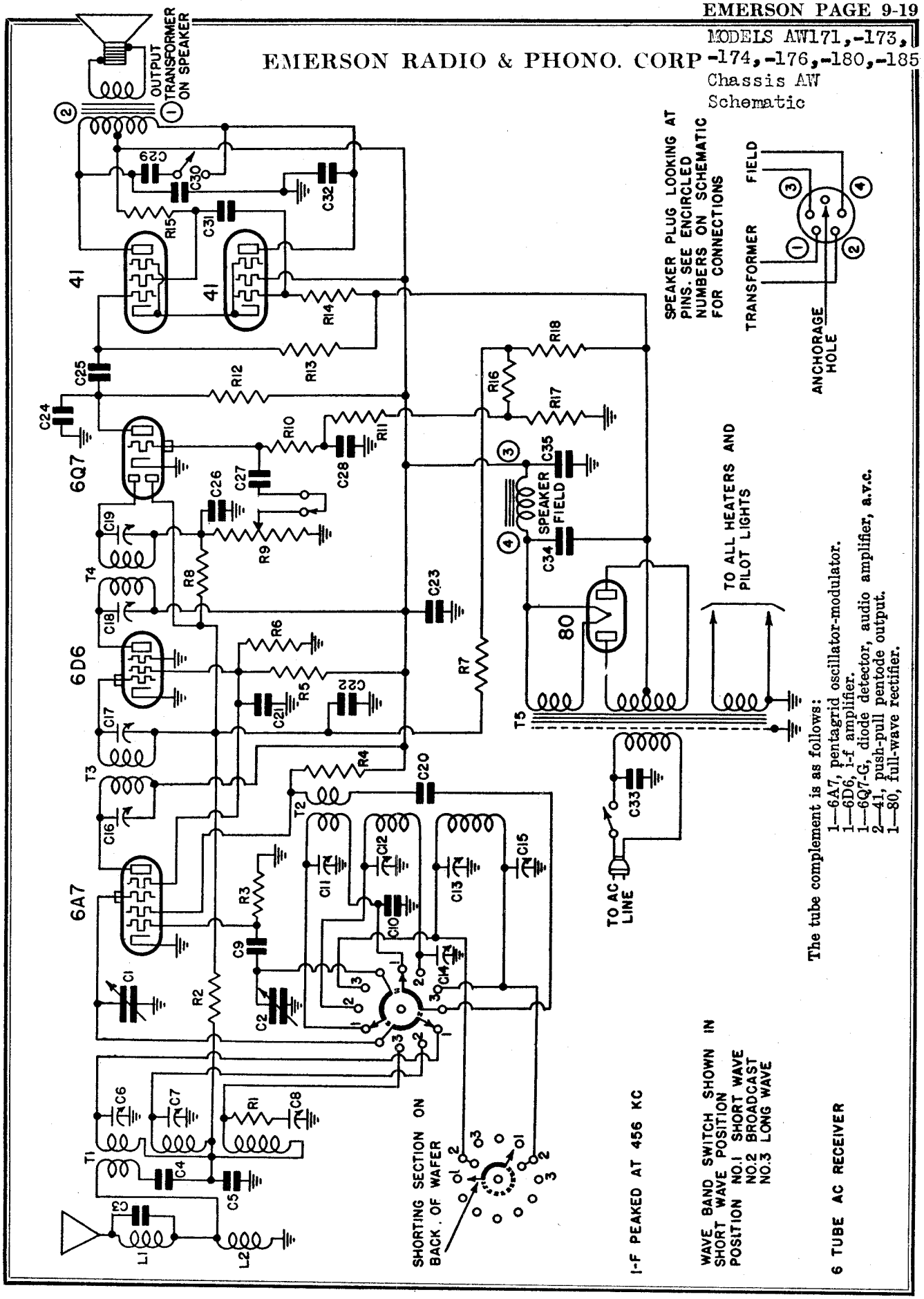

The tube complement is as follows:
1—6A7, pentagrid oscillator-modulator.
1—6D6, i-f amplifier.
1—6Q7-G, diode detector, audio amplifier, a.v.c.
2—41, push-pull pentode output.
1—80, full-wave rectifier.

©John F. Rider, Publisher

REPLACEMENT PARTS

List Prices as Effective as of March 15th, 1938 (Subject to change without notice)

Item	Part No.	DESCRIPTION	Price
L1	2ZT-268	456 kc fixed wave-trap	$ .75
L2	3ET-299	R-f choke	.55
T1	3ET-297	Three-band antenna coil	2.05
T2	3ET-298	Three-band oscillator coil	1.90
T3	3ZT-342	456 kc first i-f transformer	1.50
T4	2NT-231	456 kc second i-f transformer	1.35
T5	3ZT-345	Power transformer	4.45
R1	TTR-201	3,000 ohm ¼ watt carbon resistor	.16
R2, R11	KR-55	250,000 ohm ¼ watt carbon resistor	.16
R3	KR-53	50,000 ohm ¼ watt carbon resistor	.16
R4	3BR-247	40,000 ohm ¼ watt carbon resistor	.16
R5	BR-12	25,000 ohm 1 watt carbon resistor	.16
R6	3LR-265	40,000 ohm ½ watt carbon resistor	.16
R7	3RR-275	10 megohm ¼ watt carbon resistor	.16
R8	HR-42	2 megohm ¼ watt carbon resistor	.16
R9	3ZR-288	500,000 ohm volume control with line switch	1.05
R10	KR-57	1 megohm ¼ watt carbon resistor	.16
R12	KR-54	100,000 ohm ¼ watt carbon resistor	.16
R13, R14	KR-56	500,000 ohm ¼ watt carbon resistor	.16
R15	3AR-250	3,500 ohm ¼ watt carbon resistor	.16
R16, R18	4RR-319	175 ohm 1 watt wire-wound resistor	.16
R17	3CR-281	45 ohm ½ watt wire-wound resistor	.16
C1, C2	4PC-366	Two-gang variable condenser	4.00
C4, C27	FC-29	0.02 mf, 200 volt tubular condenser	.20
C5	2ZC-253	0.0025 mf mica condenser	.30
†C6, C7, C8		Trimmers; part of antenna coil.	
C9	AAC-106A	0.00005 mf mica condenser	.20
C10	3EC-286	0.0024 mf mica condenser	.30
†C11, C12, C13		Trimmers; part of oscillator coil.	
C14, C15	4AC-362	Dual padder; C14, 250—500 mmf. C15, 65—130 mmf	.50
†C16, C17		Trimmers; part of first i-f transformer.	
†C18, C19		Trimmers; part of second i-f transformer.	
C20	LC-65	0.02 mf, 400 volt tubular condenser	.20
C21	BC-13	0.25 mf, 200 volt tubular condenser	.20
C22	BC-12	0.05 mf, 200 volt tubular condenser	.20
C23	EEC-132	0.1 mf, 400 volt tubular condenser	.20
C24	IC-47	0.0005 mf mica condenser	.20
C25, C31	EC-23	0.03 mf, 400 volt tubular condenser	.20
C26	AC-7A	0.00025 mf mica condenser	.20
C28	AC-6	0.1 mf, 200 volt tubular condenser	.20
C29	2TC-189	0.015 mf, 1000 volt tubular condenser	.20
C30, C32	LLC-150	0.004 mf, 600 volt tubular condenser	.20
C33	3LC-297A	0.01 mf, 400 volt molded condenser	.20
C34	2NC-246	16 mf, 450 volt wet electrolytic condenser	1.20
C35	2NC-247	16 mf, 405 volt wet electrolytic condenser	1.20
	4RS-297	6½" dynamic speaker	6.75
	3ES-218	Wave-band switch	1.10
	3ES-256	Tone-control switch	.50
	4BL-94	Pilot light, 6.3 volt, .25 amp., Mazda No. 44	.20
	4WZ-709	Dial face	1.20
	3LZ-408A	Dial drive belt	.20
	4FZ-602	Dial drive shaft and pulley	.20
	3CZ-339	Idler pulley	.05
	4FZ-603	Idler pulley spring	.10
	4UZ-604	Condenser shaft pulley	.15
	4RZ-592	Dial pointer	.25
	3SZ-438C	Escutcheon with crystal	1.95

When ordering replacement parts specify part number.

*Item number locates the article on the schematic diagram.

†These trimmers are part of the coil assembly and can not be supplied separately.

VOLTAGE ANALYSIS

Readings should be taken with a 1000 ohms-per-volt meter. Voltages listed below are from point indicated to ground (chassis) with the volume control turned on full and no signal. Line voltage for these readings was 117.5 volts, 60 cycles, a.c. All readings, except bias, heaters, and B plus at rectifier, were taken on 250 volt scale.

Tube	*Plate*	*Screen*	*Cathode*	*Osc. Plate*	*Fil.*
6A7	250	82	0	126	6.3 a.c.
6D6	250	82	0	—	6.3 a.c.
6Q7-G	175	—	0	—	6.3 a.c.
41	245	240	0	—	6.3 a.c.
41 (in corner)	245	250	0	—	6.3 a.c.

Voltage across speaker field—65.
Voltage at 80 filament to B minus—315.
The grid bias for all the tubes is developed across the resistors, R16, R17, R18. The total voltage measured across these three resistors should be 28 volts. The voltage across R16 and R18 should be 13 volts. The voltage across R17 should be 2.6 volts.

ADJUSTMENTS

An oscillator with frequencies of 150, 350, 456, 600, 1500 and 15,000 kc should be used.
An output meter should be used across the voice coil or output transformer for observing maximum response.
Use a standard dummy antenna when aligning either the long-wave or medium-wave bands. A .0002 mf condenser may be used as a substitute. When aligning the short-wave band use a 400 ohm dummy antenna (a 400 ohm resistor in series with antenna lead).
Always choose the minimum capacity peak on oscillator trimmers and maximum capacity peaks on antenna trimmers. The last motion in adjusting trimmers should always be a tightening one, not a loosening one.
Always use as weak a test signal as possible during alignment.
Never leave a trimmer with its outside plate so loose that there is no tension on the screw. Either bend the plate up or remove the screw entirely.

Location of Coils and Trimmers

The two i-f transformers are located on top of the chassis deck. The second i-f transformer is the one directly behind the variable condenser. The four trimmers, two for each transformer, are accessible through holes in the tops of the cans.
The dual adjustable padding condenser is mounted on the left side of the front chassis wall.
The antenna coils for the three bands are wound on one form and mounted underneath the chassis deck directly behind the adjustable padding condenser. The trimmers for these coils are accessible through holes in the top of the chassis. The trimmer nearest the front of the chassis is the medium-wave antenna trimmer. The central trimmer is the short-wave antenna trimmer. The trimmer farthest from the front of the chassis is the long-wave antenna trimmer.
The oscillator coils for the three bands are wound on one form and mounted underneath the chassis deck near the variable condenser. The trimmers for these coils are also accessible through holes in the top of the chassis. The trimmer nearest the front of the chassis is the medium-wave oscillator trimmer. The central trimmer is the short-wave oscillator trimmer. The trimmer farthest from the front of the chassis is the long-wave oscillator trimmer.

I-f Alignment

Rotate the wave-band switch to the medium-waye (central) position and set the variable condenser to minimum. Feed 456 kc to the grid cap of the 6A7 tube. Adjust the four i-f trimmers for maximum response.

Long-Wave Alignment

With the wave-band switch at long-wave (clockwise) position set the dial pointer at 150 and feed 150 kc to antenna. Adjust the long-wave series padder (hex nut on dual padder) for maximum response. Move pointer to 350 and feed 350 kc to antenna. Adjust the long-wave oscillator trimmer then the long-wave antenna trimmer for maximum response. Reset pointer to 150, feed 150 kc and rock (rotate back and forth through a small arc) the variable condenser while adjusting long-wave series padder for maximum response. Reset pointer to 350, feed 350 kc and check alignment. If readjustment is necessary return to 150 kc and repeat entire procedure.

Medium-Wave Alignment

Set switch at medium-wave (central) position and dial pointer at 600. Feed 600 kc to antenna and adjust medium-wave series padder (slotted screw on dual padder) for maximum response. Move pointer to 1500, feed 1500 kc and adjust medium-wave oscillator trimmer and then the medium-wave antenna trimmer for maximum response. Reset pointer to 600 feed 600 kc and rock variable condenser while readjusting medium-wave series padder for maximum response. Reset pointer to 1500, feed 1500 kc and check alignment. If readjustment is necessary return to 600 and repeat entire procedure.

Short-Wave Alignment

Set wave-band switch at short-wave (counter-clockwise) position. Set pointer at 15, feed 15 megacycles to antenna and adjust short-wave oscillator trimmer and then short-wave antenna trimmer for maximum response.

Voltage rating	105-125 volts, 60 cycle, a.c.
Power consumption	55 watts.
Frequency ranges	150 to 375 kc, 540 to 1600 kc, 5.7 to 17.5 megacycles.

GENERAL NOTES

1. The receiver should never be turned on with either the speaker plug or the 41 tubes out of their respective sockets, since the rapid rise in rectifier voltage will damage the electrolytic condenser.
2. When replacing the chassis in the cabinet take precautions to keep any part of the dial and condenser assembly from touching the cabinet, otherwise microphonism will result.
3. The color coding of the i-f transformers is as follows:
   Grid—green — Grid return—black
   B plus—red — Plate—blue.
4. The color coding of the power transformer is as follows:
   Primary—two black leads.
   High-voltage secondary—two red leads.
   High-voltage secondary center tap—red and yellow lead.
   6.3 volt secondary—two green leads.
   5 volt secondary—two yellow leads.
5. The adjustable padding condenser for the long-wave and medium-wave bands is mounted underneath the chassis (in the corner near the wave-band switch) with the screw adjustment accessible through a hole in the front of the chassis. The short-wave band has a fixed padder, C10 on schematic. When replacing this fixed padder be careful to use a condenser which has a capacity within 2% of the specified value, otherwise the short-wave coils may not track.

©John F. Rider, Publisher

MODEL AB184, Chassis AB

EMERSON RADIO & PHONO. CORP.

MODEL X175, Chassis X, Late

Schematic, Voltage, Notes

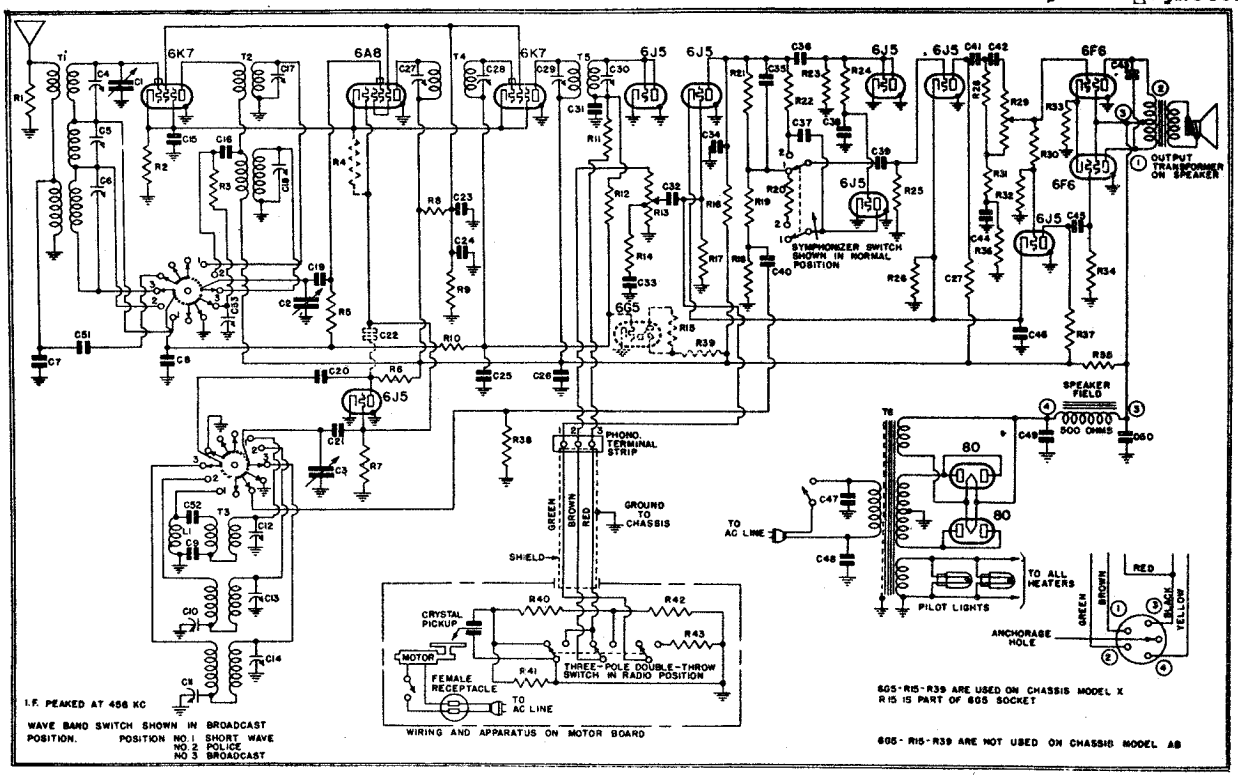

The schematic diagram is drawn for the Model AB. Model X receivers differ from the schematic as follows:

R42 is omitted. R40 is changed to a 500,000 ohm resistor, part no. KR-56; and C54 (shown dotted) is added across R40.

In addition, the 6G5 tube and resistors R15 and R39 (shown dotted) are added for the Model X only.

VOLTAGE ANALYSIS

Readings should be taken with a 1000 ohms-per-volt meter. Voltages listed below are from point indicated to ground (chassis) with the volume control turned on full and no signal. Line voltage for these readings was 117.5 volts, 60 cycles, a.c.

Tube	*Plate*	*Screen*	*Cathode*	*Fil.*
6K7 r-f amplifier	240	90	2	6.3 a.c.
6A8 modulator	240	90	2	6.3 a.c.
6J5 oscillator	80	—	—	6.3 a.c.
6K7 i-f amplifier	240	90	2	6.3 a.c.
6J5 diode detector	—	—	—	6.3 a.c.
6J5 1st a-f amplifier	125	—	5.6	6.3 a.c.
6J5 2nd a-f amplifier	140	—	5.6	6.3 a.c.
6J5 phase inverter	140	—	5.6	6.3 a.c.
6F6 output	280	300	18	6.3 a.c.
6F6 output	280	300	18	6.3 a.c.
6J5 symphonizer rectifier	—	—	—	6.3 a.c.
6J5 symphonizer amplifier	15	(symph. position—50 V. scale)		6.3 a.c.

Voltage across speaker field—75.
Voltage at 80 filament—375.

*See production changes.

Voltage rating ..... 105-125 volts, 60 cycles, a.c.
Power consumption ..... 130 watts at 117.5 volts.
Frequency ranges ..... 540 to 1800 kc, 1800 to 6,250 kc and 5.8 to 22.0 megacycles.

(*See production changes for frequency ranges of early receivers*)

GENERAL NOTES

1. In replacing chassis in cabinet do not tighten mounting screws so much that chassis will not float freely, and do not allow any part of the dial assembly to touch the cabinet. Do not push control knobs on so far that they touch the cabinet front panel. If these precautions are not observed the receiver may become microphonic.
2. The color coding of the power transformer leads is as follows:
   Primary—two black leads
   High voltage sec.—two red leads
   High voltage secondary center tap—red and yellow lead
   6.3v sec.—two heavy green leads
   5v sec.—two heavy yellow leads
*3. The tuning indicator (6G5 tube—used in Model X chassis only) is mounted in the cabinet above the dial. The color coding of the tuning indicator tube cable is as follows:
   Black, white tracer—cathode
   Red—target
   Black—filament
   Green—grid
4. The phonograph motor has been adjusted at the factory to turn at a speed of 78 r.p.m. The speed may be checked by counting the turns per minute or by using a stroboscope disc and a neon light. (The stroboscope method will only work when neon bulb is lighted from a 60 cycle a.c. supply.) To readjust the speed of the motor, part No. 4BPM-11, remove the turn-table and turn the speed adjusting screw (located near the turn-table shaft). A clockwise rotation of the screw decreases the speed. The speed should be checked with the pick-up and record in playing position. The phonograph motor on part No. 3XZ-695 record changer, has the speed adjustment brought out to an indicator arm and escutcheon. The speed of this motor is adjusted by shifting the indicator arm to the right or left.

©John F. Rider, Publisher

©John F. Rider, Publisher

REPLACEMENT PARTS

CHASSIS PARTS

*Item	Part No.	DESCRIPTION	List Price as. Effective as of Dec. 15th, 1937 (Subject to change without notice) PRICE
T1	4BT-396	Three-band antenna coil (See Production Changes)	$2.05
T2	4BT-397	Three-band interstage coil (See Production Changes)	1.80
T3	4BT-398	Three-band oscillator coil (See Production Changes)	1.95
T4	3BT-269	456 kc first i-f transformer	2.00
T5	3AT-261	456 kc second i-f transformer	1.90
T6	3XT-338	Power transformer	6.90
L1	4BT-399	Oscillator choke (See Production Changes)	.25
R1, R14, R31	LR-64	5,000 ohm, ¼ watt carbon resistor	.16
R2	3VR-270	90 ohm, ½ watt wire-wound resistor	.16
R3	LR-60	20,000 ohm, ¼ watt carbon resistor	.16
R4, R7, R10; R11, R16, R18, R27, R28, R37	KR-53	50,000 ohm, ¼ watt carbon resistor	.16
R5, R23, R25	KR-57	1 megohm, ¼ watt carbon resistor	.16
R6	BR-12	25,000 ohm, 1 watt carbon resistor (See Production Changes)	.16
R8	3BR-246	10,000 ohm, 2 watt carbon resistor	.28
R9	2TR-225	12,000 ohm, 2 watt carbon resistor	.28
R12, R17, R22	HR-42	2 megohm, ¼ watt carbon resistor	.16
R13	3XR-287	Volume control—500,000 ohms	.90
R15		1 megohm resistor in 6G5 socket (See Production Changes)	.16
R19	KR-63	15,000 ohm, ¼ watt carbon resistor	.16
R20, R36	LR-61	200,000 ohm, ¼ watt carbon resistor	.16
R21	LLR-154	75,000 ohm, ¼ watt carbon resistor	.16
R24	NNR-220	3 megohm, ¼ watt carbon resistor	.16
R26	YR-96	1,500 ohm, ¼ watt carbon resistor	.16
R29	3XR-277	Tone control with line switch—500,000 ohms	1.00
R30 R34	KR-56	500,000 ohm, ¼ watt carbon resistor	.16
R32	NR-66	35,000 ohm, ¼ watt carbon resistor	.16
R33	3XR-278	220 ohm, 2 watt wire-wound resistor	.16
R35	3XR-283	1,500 ohm, 2 watt carbon resistor	.28
R38	OR-73	25,000 ohm, ¼ watt carbon resistor	.16
R39	GR-31	20,000 ohm, 1 watt carbon resistor (See Production Changes)	.16
C1, C2, C3	4BC-361	Three-gang variable condenser with gear train for dial (See Production Changes)	7.75
†C4, C5, C6		Trimmer, part of antenna coil.	
C7, C52	AAC-106A	0.00005 mf mica condenser (See Production Changes)	.20
C8	BC-12	0.05 mf, 200 volt tubular condenser	.20
C9	3EC-267	0.0042 mf mica condenser (See Production Changes)	.40
C10, C11	3SC-309	Dual adjustable padding condenser C10—1,200 to 2,000 mmf C11—300 to 600 mmf	.95
†C12, C13, C14		Trimmer, part of oscillator coil.	
C15, C38	BC-13	0.25 mf, 200 volt tubular condenser	.20
C16	LC-65	0.02 mf, 400 volt tubular condenser (See Production Changes)	.20
†C17, C18, C53		Trimmer, part of interstage coil.	
C19, C31	EC-24A	0.0001 mf mica condenser	.20
C20, C32, C37; C42, C51	KC-58	0.01 mf, 400 volt tubular condenser	.20
C21, C22	IIC-133A	0.000025 mf mica condenser (See Production Changes)	.20
C23	YC-98A	4 mf, 150 volt tubular dry electrolytic condenser	1.05
C24, C33	AC-6	0.1 mf, 200 volt tubular condenser	.20
C25	FC-29	0.02 mf, 200 volt tubular condenser	.20
C26	3XC-374	0.1 mf, 600 volt tubular condenser	.20
†C27, C28		Trimmer, part of first i-f transformer.	
†C29, C30		Trimmer, part of second i-f transformer.	
C34, C35	IC-47A	0.0005 mf mica condenser	.20
C36, C41	EEC-132	0.1 mf, 400 volt tubular condenser	.20
C39	LC-65	0.02 mf, 400 volt tubular condenser	.20
C40	EC-19	0.5 mf, 200 volt tubular condenser	.35
C43	NNC-214	0.002 mf, 1000 volt tubular condenser	.20
C44	3XC-331	0.015 mf, 400 volt tubular condenser	.20
C45	LC-64	0.05 mf, 400 volt tubular condenser	.20
C46	IC-43A	5 mf, 25 volt tubular dry electrolytic condenser	.90
C47, C48	3LC-297A	0.01 mf, 400 volt molded type paper condenser	.20
C49, C50	3XC-329	30 mf, 400 volt wet electrolytic condenser	1.45
	3XS-237	Dynamic speaker complete (for Model AB)	13.75
	3XS-237B	Dynamic speaker complete (for Model X)	13.75
	3XS-238	Wave-band switch	1.90
	2AS-137A	Symphonizer switch	.90
	XL-9 or 4BL-94	Pilot light, 6.3 volt, .25 amp., Mazda No. 46. Screw type base. Pilot light, 6.3 volt, .25 amp., Mazda No. 44. Bayonet type base	.20
	3XD-46	Metal plate for dial face	.60
	3XM-277	Dial bracket	.20
	4BZ-678	Dial face (See Production Changes)	1.30
	3CZ-339	Idler pulley	.05
	3XZ-537	Idler pulley spring	.05
	3AZ-371	Dial drive belt	.20
	3SZ-436 or 3XZ-612	Frequency indicating pointer (screw-type). Frequency indicating pointer (push-on type)	.10 .30
	3AZ-367A	Band-spread pointer	.10
	3XZ-497	Dial drive shaft and pulley	.30
	3XZ-538	Drive shaft bushing	.10
	3XZ-684	Electron Ray socket and cable with 1 meg. resistor (See Production Changes)	.80
	3AZ-407	Electron Ray escutcheon	.20
	3AZ-406	Dial escutcheon with crystal	1.65

PHONOGRAPH PARTS

R40	KR-57	1 megohm, ¼ watt carbon resistor	.16
R41, R42, R43	KR-56	500,000 ohm, ¼ watt carbon resistor	.16
C54	3HC-274	0.002 mf, 600 volt tubular condenser	.20
	4BPM-11	Phonograph motor complete with accessories (for Model AB)	28.60
	3ZZ-564	Crystal pickup (for Model AB)	18.00
	3XZ-695	Record changer complete with motor and pickup (for Model X)	127.50
	3LS-232	On-off switch for phonograph motor	.70
	4RS-301	Automatic stop switch for motor	2.50
	3LS-211	Phono-radio switch	1.00
	3LM-253	Phonograph needle cup	.20
	3LM-255	Phonograph needle cup cover	.15
	3XZ-711	Phonograph record album (for Model X-175)	6.60

PRODUCTION CHANGES

Model X receivers bearing serial numbers below 1,472,743 differed from the schematic diagram and parts list as follows:

a. C26 was a 0.1 mf, 400 volt tubular condenser.

In addition, Model X receivers bearing serial numbers below 1,328,650 and Model AB receivers below 1,373,394 differ from the schematic diagram as follows:

6C5 tubes are used instead of 6J5 tubes.

In addition, Model X receivers bearing serial numbers below 1,328,250 differed from the schematic diagram and parts list as follows:

The 1 megohm resistor R15 was in the chassis and not in the 6G5 socket as indicated. The 6G5 socket and cable assembly was part no. 3AZ-322C and was color coded as follows:

Shield—Cathode, Blue—plate, Red—target, Black—filament, Green—grid.

In addition, Model X receivers bearing serial numbers below 1,293,633 and Model AB receivers bearing serial numbers below 1,320,357 differed from the schematic and parts list as follows:

a. R4 and C22 were connected in the circuit as shown by the dotted lines on the schematic diagram. When these parts are in the circuit there is no direct connection between the 6A8 oscillator plate and the grid of the 6C5 oscillator.

b. The antenna coil was part no. 3XT-335. The interstage coil was part no. 3XT-336. The oscillator coil was part no. 3XT-337. The variable condenser was part no. 3XC-328. The dial face was part no. 3XZ-493.

c. The short-wave fixed padder, C9 on schematic diagram, was a 0.0038 mf mica condenser.

d. The trimmer condenser C53 on the short-wave interstage coil was not in the circuit.

e. R6 was a 40,000 ohm 1 watt resistor.

f. C21 was a 0.00005 mf mica condenser.

g. C16 was a 0.01 mf, 400 volt paper condenser.

h. R3 was returned to ground instead of to the wave-band switch as shown on the schematic diagram.

NOTE: When the above parts are used in the receiver the frequency range is as follows: Broadcast—550 to 1750 kc, Police—1750 to 6,250 kc and Short-wave—5.6 to 18.0 megacycles.

In addition, Model X receivers bearing serial numbers below 1,216,700 and Model AB receivers bearing serial numbers below 1,291,097 differed from the schematic diagram and parts list as follows:

a. C22 shown dotted on the schematic diagram was a 0.00005 mf mica condenser.

In addition, Model X receivers bearing serial numbers below 1,156,977 differed from the schematic diagram and parts list as follows:

a. No phonograph terminal strip was used. The volume control was connected directly to R11.

b. R4 was a 200,000 ohm resistor.

In addition, Model X receivers bearing serial numbers below 1,065,450 differed from the schematic diagram as follows:

a. R39 was not in the circuit.

In addition, earlier Model AB combinations use phonograph motor, part no. 3LPM-3.

This motor is equipped with a mounting plate. Later combinations use phonograph motor, part no. 4BPM-11, mounted on a separate mounting panel which is not supplied with motor.

EMERSON RADIO & PHONOGRAPH CORP

MODEL AB184, Chassis AB
MODEL X175, Chassis X, Late

ADJUSTMENTS

Alignment

An oscillator with frequencies of 456, 600, 1600, 1800, 6000, 18,000 and 20,000 kc should be used.

An output meter should be used across the voice coil or speaker output transformer for observing maximum response.

Use a dummy antenna for aligning any of the three bands. A .0002 mf condenser may be used for broadcast band dummy antenna, a .0001 mf condenser for the police band dummy antenna and a 400 ohm non-inductive resistor for the short-wave band dummy antenna.

Always use as weak a test signal as possible during alignment.

The set's oscillator is higher in frequency than the signal on *all three bands*, so images should be observed on the low frequency side of the signals.

Always choose the minimum capacity peak on oscillator trimmers and maximum capacity peaks on antenna trimmers. The last motion in adjusting trimmers should always be a tightening one, *not* a loosening one.

Never leave a trimmer with the outside plate so loose that there is no tension on the screw. Either bend the plate up or remove the screw entirely. Loose screws are a sure source of noise, drifting, and microphonism.

In aligning antenna trimmers on the high-frequency signals there is always a tendency for the oscillator to drift, due to interlocking. To compensate for this always keep tuning the variable condenser as the trimmers are being adjusted.

Location of Coils and Trimmer Adjustments

The i-f transformers are located on the left-hand side of the top of the chassis. The first i-f transformer is the one nearest the rear of the chassis. The four trimmers for the i-f adjustment are available through holes in the tops of the cans.

The antenna coils for the three bands are wound on one form located on the front wall of the chassis with the trimmers accessible through holes in the chassis. The left-hand trimmer is for the broadcast band, the right-hand trimmer is for the short-wave band and the central trimmer is for the police band.

The r-f interstage coils are also wound on one form and mounted underneath the chassis on the right-hand side of the variable condenser. The trimmers are accessible through holes in the top of the chassis. The trimmer closer to the variable is for the short-wave band and the one farthest from the variable is for the broadcast band. On coils 4BT-397 only, a middle trimmer will be found. This trimmer is for compensating the short-wave band at 6 mc.

The oscillator coils are wound on one form and mounted underneath the chassis directly behind the r-f interstage coil. The trimmers are accessible through holes in the top of the chassis. The trimmer closest to the variable condenser is for the broadcast band, the trimmer farthest from the variable is for the short-wave band and the central trimmer is for the police band.

The oscillator series padder for the broadcast and police bands are mounted underneath the chassis near the oscillator coils. The adjusting screws are available through holes in the top of the chassis. The padder nearest the front of chassis is for the broadcast band. The padder for the short-wave band is a fixed mica condenser, C9 on the schematic diagram. If this condenser is to be replaced use a condenser with a value within 2% of that specified.

I-f Alignment

Set the wave-band switch at the broadcast (clockwise) position and the variable condenser at the minimum capacity position. Feed 456 kc to the grid cap of the 6A8 tube through a .02 mf condenser and adjust the four i-f trimmers for maximum response. (Do not remove the grid clip from the tube.)

Broadcast Alignment

Both pointers on the dial should coincide vertically at 890 kc. (For adjustment the thinner pointer may be slipped around on its shaft.)

Set the wave-band switch at the broadcast (clockwise) position, and the dial pointer at 60. Feed 600 kc to the antenna (using a standard dummy antenna) and adjust the broadcast-band series padder for maximum response. Move the pointer to 160, feed 1600 kc and adjust the oscillator coil trimmer for maximum response, then adjust the interstage and antenna coil trimmers for maximum response. Reset the pointer at 60, feed 600 kc and rock the variable condenser while adjusting the series padder for maximum response. Return to 1600 and check alignment. If readjustment is necessary return to 600 and repeat entire procedure.

Police Alignment

Set the wave-band switch at the police-band (central) position and the dial pointer at 1.8. Feed 1800 kc to the antenna (using a .0001 mf dummy antenna) and adjust the police-band series padder for maximum response. Move the dial pointer to 6.0, feed 6000 kc and adjust the oscillator trimmer for maximum response. Then adjust the antenna trimmer for maximum response. Note the interstage coil on this band has no trimmer adjustment. Return the dial pointer to 1.8, feed 1800 kc to the antenna and rock the variable condenser while readjusting the series padder for maximum response. Return to 6000 kc and check alignment. If readjustment is necessary return to 1800 kc and repeat entire procedure.

Short-Wave Alignment

The following alignment procedure is used when aligning receivers on which the short-wave band covers frequencies up to 22 mc. These receivers will bear serial numbers above 1,293,633 *on the Model X Chassis, and above* 1,320,357 *on the Model AB Chassis*:

Set the wave-band switch at the short-wave (counter-clockwise) position. Move the dial pointer to 20 and feed 20,000 kc to the antenna (using a 400 ohm dummy antenna) and adjust the short-wave oscillator trimmer for maximum response. If two peaks are obtained choose the minimum capacity peak. Then adjust the interstage and antenna coil trimmers for maximum response. If two peaks are obtained choose the maximum capacity peak. Move the pointer to 6 mc, feed 6000 kc to the antenna and adjust the r-f interstage trimmer (central trimmer at right of variable condenser) for maximum response.

The following alignment procedure is used when aligning receivers on which the short-wave band extends only to 18 mc. These receivers will bear serial numbers below 1,293,633 *on the Model X Chassis, and below* 1,320,357 *on the Model AB Chassis*:

Set the wave-band switch at the short-wave (counter-clockwise) position. Move the dial pointer to 18 and feed 18,000 kc to the antenna (using a 400 ohm dummy antenna) and adjust the short-wave oscillator trimmer for maximum response. If two peaks are obtained choose the minimum capacity peak. Then adjust the interstage and antenna coil trimmers for maximum response. If two peaks are obtained choose the maximum capacity peak.

Tube Data

1—6K7—R-f amplifier (opposite front section of variable condenser)
1—6A8—Modulator (opposite rear section of variable condenser)
*1—6J5—Oscillator (behind variable condenser)
1—6K7—I-f amplifier (between i-f transformers)
*1—6J5—Diode detector, a.v.c. (left side of chassis nearest front)
*1—6J5—First a-f amplifier (left side of chassis second from front)
*1—6J5—Symphonizer rectifier (left side of chassis third from front)
*1—6J5—Symphonizer amplifier (left side of chassis fourth from front)
2—6F6—Pentode power output (two large tubes at rear)
*1—6J5—Phase inverter (rear between 6F6 tubes)
*1—6J5—Second a-f amplifier (behind 6A8 tube)
2—80—Rectifiers (beside power transformer)
1—6G5—Tuning indicator (Model X Chassis only).

If the metal type 6F6 power output tubes are replaced with the equivalent glass type 6F6G, the one nearest the center of the chassis must be shielded, otherwise audio oscillation may result.

©John F. Rider, Publisher

MODEL Q157
Chassis Q
Schematic, Changes
Voltage, Alignment
Parts

EMERSON RADIO & PHONO. CORP.

MODEL Q157

CHASSIS MODEL Q

Voltage rating ..... 105 to 125 volts a-c or d-c.
Power consumption ..... 45 watts.
Frequency range ..... 540 to 1725 kc.

ALIGN AT 1400 KC

Four-Tube A.C.-D.C. T.R.R. RECEIVER

*ITEM	PART NO.	DESCRIPTION	PRICE
T1	2VT-241B	Broadcast antenna coil	$ .60
T2	3QT-344	Broadcast detector coil	.55
R1	2VR-219D	Volume control—75,000 ohms	1.00
R2	3RR-276	310 ohm ½ watt wire-wound molded resistor	.16
R4	OR-73	250,000 ohm ¼ watt carbon resistor	.16
R5	HR-42	2 megohm ¼ watt carbon resistor	.16
R6	KR-56	500,000 ohm ¼ watt carbon resistor	.16
R7	KR-56	500,000 ohm ¼ watt carbon resistor	.16
R8	3QR-297	110 ohm ½ watt wire-wound resistor	.16
R9		185 ohm 17 watt resistor in line cord (see KKW-46A below)	
R10	2DR-213	40 ohm metal clad wire-wound resistor	.30
C1, C2	3QC-332	Two gang variable condenser	2.45
C3	NNC-199	0.001 mf roll type condenser	.20
†C4, C5		Trimmer part of variable condenser	
†C6, C8	AC-6	0.1 mf, 200 volt roll type condenser	.20
C7	BC-13	0.25 mf, 200 volt roll type condenser	.20
C9	LC-65	0.02 mf, 400 volt roll type condenser	.20
C10	EC-23	0.03 mf, 400 volt roll type condenser	.20
C11	2VC-242A	0.1 mf, 400 volt molded type paper condenser	.20
C12, C13	3QC-338	Dual 16 mf, 100 volt dry electrolytic condenser	1.05
C14	EC-24A	0.0001 mf mica condenser	.20
	3QS-257A	5" dynamic speaker	4.85
	XL-9	Pilot light, 6.3 volt .25 amp., Mazda No. 46	.20
	KKW-46A	Line cord with built-in resistor (R9)	1.05
	3QZ-527	Condenser pulley	.15
	3QZ-528	Pointer pulley	.10
	3RZ-484	Drive cord	.02
	3RZ-519	Drive cord spring	.02
	3QZ-530	Dial pointer	.20
	3QZ-525	Wire screen grille	.35

List Price as Effective as of May 1st, 1937 (Subject to change without notice)

*Item number locates the article on the schematic diagram.
†These trimmers cannot be supplied separately.

PRODUCTION CHANGES

1. In receivers bearing serial numbers below 1,109,445
   a) C10 was returned to B plus instead of the 25L6 cathode as shown on the schematic diagram.
   b) A 250,000 ohm ¼ watt carbon resistor was connected from the cathode of the 6D6 to B plus.
   c) C14 was connected from the 25L6 grid to ground.
2. In receivers bearing serial numbers below 1,200,686 the speaker was part No. 3QS-257.
3. In receivers bearing serial numbers between 1,308,161 and 1,317,310,
   a) The speaker was part No. 2VS-157. The voltage across its field was 130 volts.
   b) A filter choke, part No. ZZT-196A, was used in series with the B+ lead.

below 1,203,000 - C14 was returned to ground instead of the 6C6 cathode as shown on the schematic diagram.

VOLTAGE ANALYSIS

Readings should be taken with a 1000 ohms-per-volt meter. Voltages listed below are from point indicated to ground (chassis) with volume control turned on full and no signal. The line voltage for these readings was 117.5 volts, 60 cycles, a-c.

Tube	*Plate*	*Screen*	*Cathode*	*Fil.*
6D6	100	100	2.8	6.3
6C6	30	15	1.4	6.3
25L6	93	100	5.7	25.0

Voltage across speaker field—30 volts.
25Z5 cathode to ground—130 volts.

ALIGNMENT PROCEDURE

An oscillator with a frequency of 1400 kc. is required.
Use as weak a test signal as possible. An output meter should be used across the voice coil or output transformer for observing maximum response.

Rotate variable condenser to the maximum capacity position and set the pointer at the next calibration mark above 55. Then rotate the variable condenser until the pointer is at 140 and feed 1400 kc to the antenna through a standard dummy antenna (a .0001 mf mica condenser may be used as a substitute), adjust both trimmer condensers on the variable condenser for maximum response.

TUBE DATA

The tube complement is as follows:
1—6D6, r-f amplifier.
1—6C6, biased detector.
1—25L6, beam power output.
1—25Z5, dual half-wave rectifier.

©John F. Rider, Publisher

Chassis X, Late
Schematic, Voltage
Changes

EMERSON RADIO & PHONO. CORP.

MODELS AB178, -182, -183
Chassis AB
MODELS X146, -178, -183

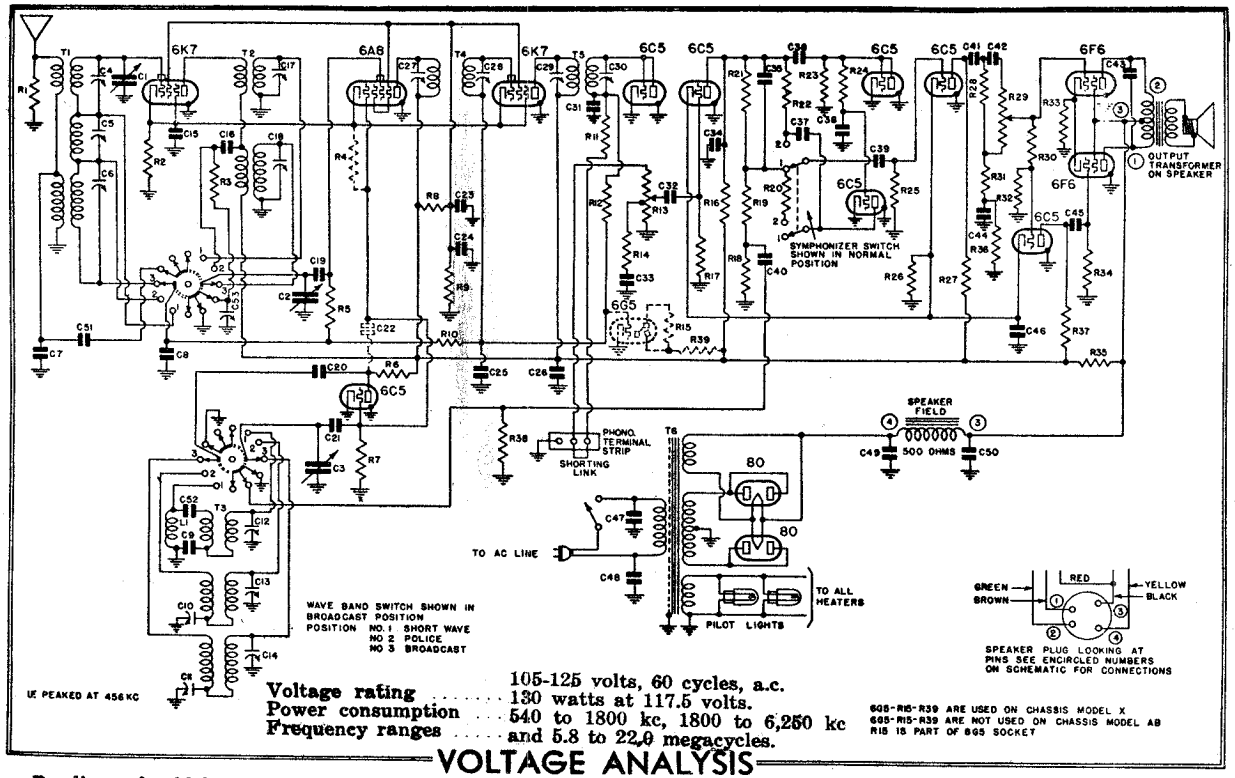

Voltage rating	105-125 volts, 60 cycles, a.c.
Power consumption	130 watts at 117.5 volts.
Frequency ranges	540 to 1800 kc, 1800 to 6,250 kc and 5.8 to 22.0 megacycles.

VOLTAGE ANALYSIS

Readings should be taken with a 1000 ohms-per-volt meter. Voltages listed below are from point indicated to ground (chassis) with the volume control turned on full and no signal. Line voltage for these readings was 117.5 volts, 60 cycles, a.c.

Tube	*Plate*	*Screen*	*Cathode*	*Fil.*
6K7 r-f amplifier	240	90	2	6.3 a.c.
6A8 modulator	240	90	2	6.3 a.c.
6J5 or 6C5 oscillator	80	—	—	6.3 a.c.
6K7 i-f amplifier	240	90	2	6.3 a.c.
6J5 or 6C5 diode detector	—	—	—	6.3 a.c.
6J5 or 6C5 1st a-f amplifier	125	—	5.6	6.3 a.c.
6J5 or 6C5 2nd a-f amplifier	140	—	5.6	6.3 a.c.
6J5 or 6C5 phase inverter	140	—	5.6	6.3 a.c.
6F6 output	280	300	18	6.3 a.c.
6F6 output	280	300	18	6.3 a.c.
6J5 or 6C5 symphonizer rectifier	—	—	—	6.3 a.c.
6J5 or 6C5 symphonizer amplifier	15 (symph. position—50 V. scale)			6.3 a.c.

Voltage across speaker field—75.
Voltage at 80 filament—375.

PRODUCTION CHANGES

Model X receivers bearing serial numbers below 1,328,250 differed from the schematic diagram and parts list as follows:

The 1 megohm resistor R15 was in the chassis and not in the 6G5 socket as indicated. The 6G5 socket and cable assembly was part no. 3AZ-322C and was color coded as follows:

Shield—Cathode, Blue—plate, Red—target, Black—filament, Green—grid.

In addition, Model X receivers bearing serial numbers below 1,293,633 and Model AB receivers bearing serial numbers below 1,320,357 differed from the schematic and parts list as follows:

a. R4 and C22 were connected in the circuit as shown by the dotted lines on the schematic diagram. When these parts are in the circuit there is no direct connection between the 6A8 oscillator plate and the grid of the 6C5 oscillator.
b. The antenna coil was part no. 3XT-335. The interstage coil was part no. 3XT-336. The oscillator coil was part no. 3XT-337. The variable condenser was part no. 3XC-328. The dial face was part no. 3XZ-493.
c. The short-wave fixed padder, C9 on schematic diagram, was a 0.0038 mf mica condenser.
d. The trimmer condenser C53 on the short-wave interstage coil was not in the circuit.
e. R6 was a 40,000 ohm 1 watt resistor.
f. C21 was a 0.00005 mf mica condenser.
g. C16 was a 0.01 mf, 400 volt paper condenser.
h. R3 was returned to ground instead of to the wave-band switch as shown on the schematic diagram.

NOTE: When the above parts are used in the receiver the frequency range is as follows: Broadcast—550 to 1750 kc, Police—1750 to 6,250 kc and Short-wave—5.6 to 18.0 megacycles.

In addition, Model X receivers bearing serial numbers below 1,216,700 and Model AB receivers bearing serial numbers below 1,291,097 differed from the schematic diagram and parts list as follows:

a. C22 shown dotted on the schematic diagram was a 0.00005 mf mica condenser.

In addition, Model X receivers bearing serial numbers below 1,156,977 differed from the schematic diagram and parts list as follows:

a. No phonograph terminal strip was used. The volume control was connected directly to R11.
b. R4 was a 200,000 ohm resistor.

In addition, Model X receivers bearing serial numbers below 1,065,450 differed from the schematic diagram as follows:

a. R39 was not in the circuit.

©John F. Rider, Publisher

©John F. Rider, Publisher

ADJUSTMENTS

An oscillator with frequencies of 456, 600, 1600, 1800, 6000, 18,000 and 20,000 kc should be used.

An output meter should be used across the voice coil or speaker output transformer for observing maximum response.

Use a dummy antenna for aligning any of the three bands. A .0002 mf condenser may be used for broadcast band dummy antenna, a .0001 mf condenser for the police band dummy antenna and a 400 ohm non-inductive resistor for the short-wave band dummy antenna.

Always use as weak a test signal as possible during alignment.

The set's oscillator is higher in frequency than the signal on *all three bands*, so images should be observed on the low frequency side of the signals.

Always choose the minimum capacity peak on oscillator trimmers and maximum capacity peaks on antenna trimmers. The last motion in adjusting trimmers should always be a tightening one, *not* a loosening one.

Never leave a trimmer with the outside plate so loose that there is no tension on the screw. Either bend the plate up or remove the screw entirely. Loose screws are a sure source of noise, drifting, and microphonism.

In aligning antenna trimmers on the high-frequency signals there is always a tendency for the oscillator to drift due to interlocking. To compensate for this always keep tuning the variable condenser as the trimmers are being adjusted.

Location of Coils and Trimmer Adjustments

The i-f transformers are located on the left-hand side of the top of the chassis. The first i-f transformer is the one nearest the rear of the chassis. The four trimmers for the i-f adjustment are available through holes in the tops of the cans.

The antenna coils for the three bands are wound on one form located on the front wall of the chassis with the trimmers accessible through holes in the chassis. The left-hand trimmer is for the broadcast band, the right-hand trimmer is for the short-wave band and the central trimmer is for the police band.

The r-f interstage coils are also wound on one form and mounted underneath the chassis on the right-hand side of the variable condenser. The trimmers are accessible through holes in the top of the chassis. The trimmer closer to the variable is for the short-wave band and the one farthest from the variable is for the broadcast band. On coils 4BT-397 only, a middle trimmer will be found. This trimmer is for compensating the short-wave band at 6 mc.

The oscillator coils are wound on one form and mounted underneath the chassis directly behind the r-f interstage coil. The trimmers are accessible through holes in the top of the chassis. The trimmer closest to the variable condenser is for the broadcast band, the trimmer farthest from the variable is for the short-wave band and the central trimmer is for the police band.

The oscillator series padder for the broadcast and police bands are mounted underneath the chassis near the oscillator coils. The adjusting screws are available through holes in the top of the chassis. The padder nearest the front of chassis is for the broadcast band. The padder for the short-wave band is a fixed mica condenser, C9 on the schematic diagram. If this condenser is to be replaced use a condenser with a value within 2% of that specified.

I-f Alignment

Set the wave-band switch at the broadcast (clockwise) position and the variable condenser at the minimum capacity position. Feed 456 kc to the grid cap of the 6A8 tube through a .02 mf condenser and adjust the four i-f trimmers for maximum response. (Do not remove the grid clip from the tube.)

Broadcast Alignment

Both pointers on the dial should coincide vertically at 890 kc. (For adjustment the black pointer may be slipped around on its shaft.)

Set the wave-band switch at the broadcast (clockwise) position, and the dial pointer at 60. Feed 600 kc to the antenna (using a standard dummy antenna) and adjust the broadcast-band series padder for maximum response. Move the pointer to 160, feed 1600 kc and adjust the oscillator coil trimmer for maximum response, then adjust the interstage and antenna coil trimmers for maximum response. Reset the pointer at 60, feed 600 kc and rock the variable condenser while adjusting the series padder for maximum response. Return to 1600 and check alignment. If readjustment is necessary return to 600 and repeat entire procedure.

Police Alignment

Set the wave-band switch at the police-band (central) position and the dial pointer at 1.8. Feed 1800 kc to the antenna (using a .0001 mf dummy antenna) and adjust the police-band series padder for maximum response. Move the dial pointer to 6.0, feed 6000 kc and adjust the oscillator trimmer for maximum response. Then adjust the antenna trimmer for maximum response. Note the interstage coil on this band has no trimmer adjustment. Return the dial pointer to 1.8, feed 1800 kc to the antenna and rock the variable condenser while readjusting the series padder for maximum response. Return to 6000 kc and check alignment. If readjustment is necessary return to 1800 kc and repeat entire procedure.

Short-Wave Alignment

The following alignment procedure is used when aligning receivers on which the short-wave band covers frequencies up to 22 mc. These receivers will bear serial numbers above 1,293,633 *on the Model X Chassis, and above* 1,320,357 *on the Model AB Chassis:*

Set the wave-band switch at the short-wave (counter-clockwise) position. Move the dial pointer to 20 and feed 20,000 kc to the antenna (using a 400 ohm dummy antenna) and adjust the short-wave oscillator trimmer for maximum response. If two peaks are obtained choose the minimum capacity peak. Then adjust the interstage and antenna coil trimmers for maximum response. If two peaks are obtained choose the maximum capacity peak. Move the pointer to 6 mc, feed 6000 kc to the antenna and adjust the r-f interstage trimmer (central trimmer at right of variable condenser) for maximum response.

The following alignment procedure is used when aligning receivers on which the short-wave band extends only to 18 mc. These receivers will bear serial numbers below 1,293,633 *on the Model X Chassis, and below* 1,320,357 *on the Model AB Chassis:*

Set the wave-band switch at the short-wave (counter-clockwise) position. Move the dial pointer to 18 and feed 18,000 kc to the antenna (using a 400 ohm dummy antenna) and adjust the short-wave oscillator trimmer for maximum response. If two peaks are obtained choose the minimum capacity peak. Then adjust the interstage and antenna coil trimmers for maximum response. If two peaks are obtained choose the maximum capacity peak.

GENERAL NOTES

1. In replacing chassis in cabinet do not tighten mounting screws so much that chassis will not float freely, and do not allow any part of the dial assembly to touch the cabinet. Do not push control knobs on so far that they touch the cabinet front panel. If these precautions are not observed the receiver may become microphonic.
2. The color coding of the power transformer leads is as follows:
   Primary—two black leads
   High voltage sec.—two red leads
   High voltage secondary center tap—red and yellow lead
   6.3v sec.—two heavy green leads
   5v sec.—two heavy yellow leads
3. The tuning indicator (6G5 tube—used in Model X chassis only) is mounted in the cabinet above the dial. The color coding of the tuning indicator tube cable is as follows:
   Black, white tracer—cathode
   Red—target
   Black—filament
   Green—grid

REPLACEMENT PARTS

MODEL NUMBERS FOR THESE CHASSIS ARE IDENTIFIED IN THE INDEX

List Price as, Effective as of Oct. 1st, 1937 (Subject to change without notice)

*Item	Part No.	DESCRIPTION	PRICE
T1	4BT-396	Three-band antenna coil (See Production Changes)	$2.05
T2	4BT-397	Three-band interstage coil (See Production Changes)	1.80
T3	4BT-398	Three-band oscillator coil (See Production Changes)	1.95
T4	3BT-269	456 kc first i-f transformer	2.00
T5	3AT-261	456 kc second i-f transformer	1.90
T6	3XT-338	Power transformer	6.90
L1	4BT-399	Oscillator choke (See Production Changes)	.25
R1, R14, R31	LR-64	5,000 ohm, ¼ watt carbon resistor	.16
R2	3VR-270	90 ohm, ½ watt wire-wound resistor	.16
R3	LR-60	20,000 ohm, ¼ watt carbon resistor	.16
R4, R7, R10, R11, R16, R18, R27, R28, R37	KR-53	50,000 ohm, ¼ watt carbon resistor	.16
R5, R23, R25	KR-57	1 megohm, ¼ watt carbon resistor	.16
R6	BR-12	25,000 ohm, 1 watt carbon resistor (See Production Changes)	.16
R8	3BR-246	10,000 ohm, 2 watt carbon resistor	.28
R9	2TR-225	12,000 ohm, 2 watt carbon resistor	.28
R12, R17, R22	HR-42	2 megohm, ¼ watt carbon resistor	.16
R13	3XR-287	Volume control—500,000 ohms	.90
R15		1 megohm resistor in 6G5 socket (See Production Changes)	.16
R19	KR-63	15,000 ohm, ¼ watt carbon resistor	.16
R20, R36	LR-61	200,000 ohm, ¼ watt carbon resistor	.16
R21	LLR-154	75,000 ohm, ¼ watt carbon resistor	.16
R24	NNR-220	3 megohm, ¼ watt carbon resistor	.16
R26	YR-96	1,500 ohm, ¼ watt carbon resistor	.16
R29	3XR-277	Tone control with line switch—500,000 ohms	1.00
R30, R34	KR-56	500,000 ohm, ¼ watt carbon resistor	.16
R32	NR-66	35,000 ohm, ¼ watt carbon resistor	.16
R33	3XR-278	220 ohm, 2 watt wire-wound resistor	.16
R35	3XR-283	1,500 ohm, 2 watt carbon resistor	.28
R38	OR-73	25,000 ohm, ¼ watt carbon resistor	.16
R39	GR-31	20,000 ohm, ¼ watt carbon resistor (See Production Changes)	.16
C1, C2, C3	4BC-361	Three-gang variable condenser with gear train for dial (See Production Changes)	7.75
†C4, C5, C6		Trimmer, part of antenna coil.	
C7, C52	AAC-106A	0.00005 mf mica condenser (See Production Changes)	.20
C8	BC-12	0.05 mf, 200 volt tubular condenser	.20
C9	3EC-267	0.0042 mf mica condenser (See Production Changes)	.40
C10, C11	3SC-309	Dual adjustable padding condenser C10—1,200 to 2,000 mmf C11—300 to 600 mmf	.95
†C12, C13, C14		Trimmer, part of oscillator coil.	
C15, C38	BC-13	0.25 mf, 200 volt tubular condenser	.20
C16	LC-65	0.02 mf, 400 volt tubular condenser (See Production Changes)	.20
†C17, C18, C53		Trimmer, part of interstage coil.	
C19, C31	EC-24A	0.0001 mf mica condenser	.20
C20, C32, C37, C42, C51	KC-58	0.01 mf, 400 volt tubular condenser	.20
C21, C22	IIC-133A	0.000025 mf mica condenser (See Production Changes)	.20
C23	YC-98A	4 mf, 150 volt tubular dry electrolytic condenser	1.05
C24, C33	AC-6	0.1 mf, 200 volt tubular condenser	.20
C25	FC-29	0.02 mf, 200 volt tubular condenser	.20
C26, C36, C41	EEC-132	0.1 mf, 400 volt tubular condenser	.20
†C27, C28		Trimmer, part of first i-f transformer.	
†C29, C30		Trimmer, part of second i-f transformer.	
C34, C35	IC-47A	0.0005 mf mica condenser	.20
C39	LC-65	0.02 mf, 400 volt tubular condenser	.20
C40	EC-19	0.5 mf, 200 volt tubular condenser	.35
C43	NNC-214	0.002 mf, 1000 volt tubular condenser	.20
C44	3XC-331	0.015 mf, 400 volt tubular condenser	.20
C45	LC-64	0.05 mf, 400 volt tubular condenser	.20
C46	IC-43A	5 mf, 25 volt tubular dry electrolytic condenser	.90
C47, C48	3LC-297A	0.01 mf, 400 volt molded type paper condenser	.20
C49, C50	3XC-329	30 mf, 400 volt wet electrolytic condenser	1.45
	3XS-237	Dynamic speaker complete	13.75
	3XS-238	Wave-band switch	1.90
	2AS-137A	Symphonizer switch	.90
	XL-9 or 4BL-94	Pilot light, 6.3 volt, .25 amp., Mazda No. 46. Screw type base / Pilot light, 6.3 volt, .25 amp., Mazda No. 44. Bayonet type base	.20 / .20
	3XD-46	Metal plate for dial face	.60
	3XM-277	Dial bracket	.20
	3XZ-678	Dial face (See Production Changes)	1.30
	3CZ-339	Idler pulley	.05
	3XZ-537	Idler pulley spring	.05
	3AZ-371	Dial drive belt	.20
	3SZ-436	Frequency indicating pointer (screw-type)	.10
	3XZ-612	Frequency indicating pointer (push-on type)	.30
	3AZ-367A	Band-spread pointer	.10
	3XZ-497	Dial drive shaft and pulley	.30
	3XZ-538	Drive shaft bushing	.10
	3XZ-684	Electron Ray socket and cable with 1 meg. resistor (See Production Changes)	.80
	3AZ-407	Electron Ray escutcheon	.20
	3AZ-406G	Dial escutcheon with crystal	1.65

*Item number locates the article on the schematic diagram.

†These trimmer condensers are part of the coil assemblies and cannot be supplied separately.

EMERSON RADIO & PHONO. CORP.

MODEL AU 190
Chassis AU
Schematic

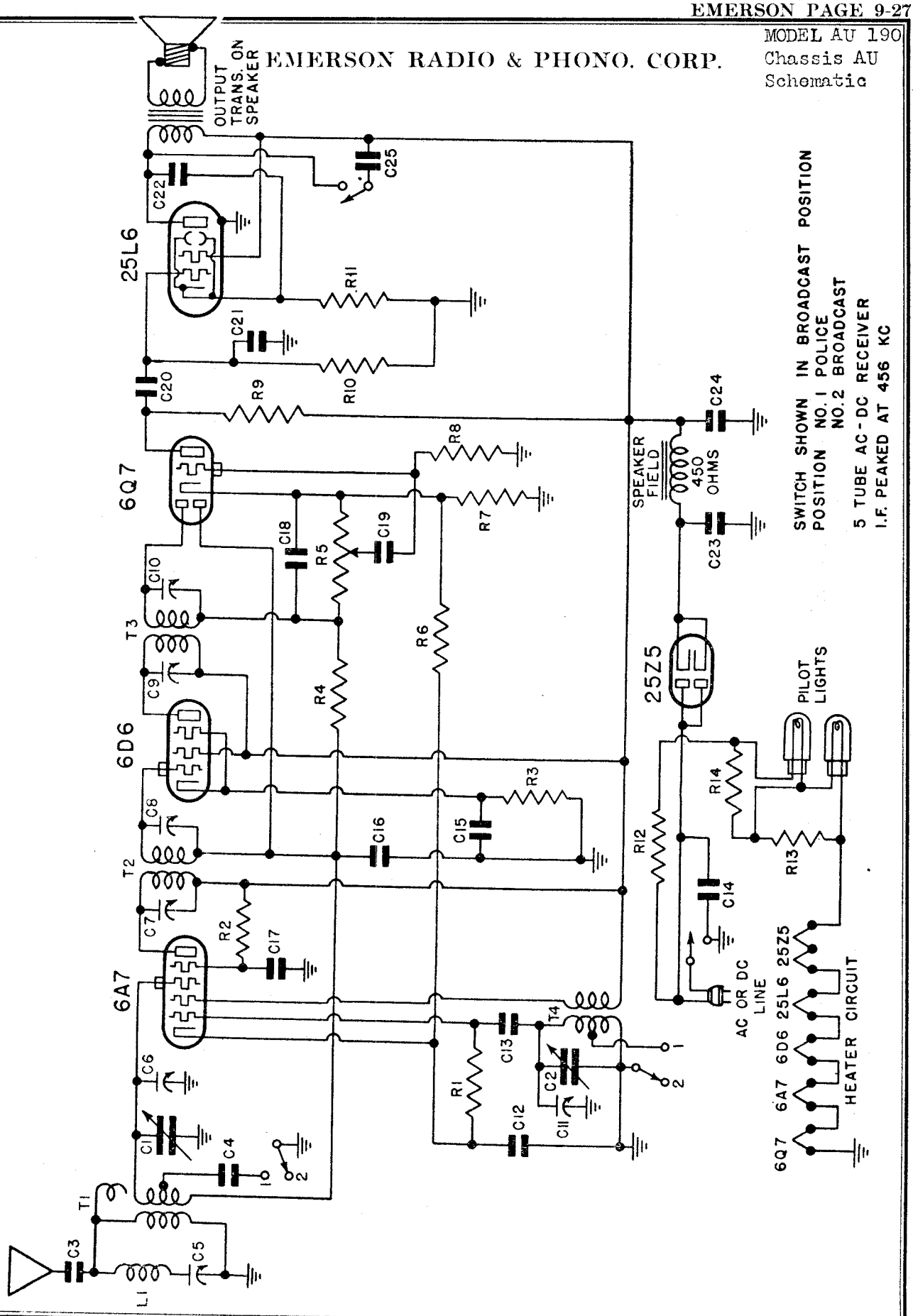

©John F. Rider, Publisher

©John F. Rider, Publisher

REPLACEMENT PARTS LIST

*Item	Part No.	DESCRIPTION	List Price Ea. Effective as of Jan. 1st, 1938 (Subject to change without notice) PRICE
L1	4DT-343	456 kc adjustable wave-trap	$ .60
T1	3RT-384A	Two-band antenna coil	.85
T2	3RT-320B	456 kc first i-f transformer	1.10
T3	4DT-362	456 kc second i-f transformer	1.10
T4	3RT-319A	Two-band oscillator coil	.80
C1, C2	4UC-365	Two-gang variable condenser	3.50
C3	3HC-274	0.002 mf, 600 volt tubular condenser	.20
C4	4DC-367	0.0012 mf, mica condenser	.30
‡C5		Trimmer, part of 456 kc wave-trap.	
†C6, C11		Trimmer, part of variable condenser.	
‡C7, C8, C9, C10		Trimmer, part of i-f coil assembly.	
C12, C15, C17	AC-6	0.1 mf, 200 volt tubular condenser	.20
C13	AAC-106A	0.00005 mf mica condenser	.20
C14	2VC-242A	0.1 mf, 400 volt molded paper condenser	.20
C16, C25	BC-12	0.05 mf, 200 volt tubular condenser	.20
C18, C21	NC-70A	0.0002 mf mica condenser	.20
C19	CCC-127	0.01 mf, 200 volt tubular condenser	.20
C20	LC-65	0.02 mf, 400 volt tubular condenser	.20
C22	3FC-336	0.025 mf, 400 volt tubular condenser	.20
C23, C24	4DC-345	Dual 16 mf, 150 volt tubular dry electrolytic condenser	1.50
R1	KR-53	50,000 ohm ¼ watt carbon resistor	.16
R2	ZZR-196	30,000 ohm ¼ watt carbon resistor	.16
R3	3CR-295	410 ohm ½ watt wire-wound resistor	.16
R4, R8	HR-42	2 megohm ¼ watt carbon resistor	.16
R5	3FR-256A	Volume control with line switch—500,000 ohm	1.00
R6, R7	3CR-294	240 ohm ½ watt wire-wound resistor	.16
R9	KR-55	250,000 ohm ¼ watt carbon resistor	.16
R10	KR-56	500,000 ohm ¼ watt carbon resistor	.16
R11	3FR-293	140 ohm, ½ watt wire-wound resistor	.16
R12		145 ohm, 15 watt resistor wire in line cord.	
R13, R14	4UR-322	80 ohm tapped wire-wound metal clad resistor: R13—40 ohms, R14—40 ohms	.30
	3QS-257B	5" dynamic speaker	4.35
	4DS-264	Wave-band switch	.35
	3ES-256D	Tone control switch	.50
	4BL-94	Pilot light 6.3 volt, .25 amp., Mazda No. 44, Bayonet type	.20
	4UW-103	Line cord with built-in resistor wire—R12	.90
	4UM-339	Metal plate for dial face	.10
	4UZ-699	Dial face	.70
	4UZ-700	Dial pointer	.15

When ordering replacement parts specify part number

*Item number locates the article on the schematic diagram.

†These trimmer condensers are part of the variable condenser and can not be supplied separately.

‡These trimmer condensers are part of the coil assemblies and can not be supplied separately.

VOLTAGE ANALYSIS

Readings should be taken with a 1000 ohms-per-volt meter. Voltages listed below are from point indicated to ground (chassis) with the volume control turned on full and no signal. Line voltage for these readings was 117.5 volts, 60 cycles, a.c. Measurements made with 117.5 volts d.c. will be lower than those given below.

Tube	*Plate*	*Screen*	*Cathode*	*Osc. Plate*	*Fil.*
6A7	100	50	2.3	100	6.3
6D6	100	100	3.5	—	6.3
6Q7	43	—	1.2	—	6.3
25L6	92	100	6.5	—	25.0

Voltage at 25Z5 cathode—128 volts.

Voltage across speaker field—28 volts.

ADJUSTMENTS

An oscillator with frequencies of 456 and 1400 kc is required.

An output meter should be used across the voice coil or output transformer for observing maximum response.

Always use as weak a test signal as possible when aligning the receiver.

Location of Coils and Trimmer Adjustments

The first i-f transformer is mounted on top of the chassis deck beside the speaker. The trimmers are accessible through holes in the top of the can.

The second i-f transformer is mounted underneath the chassis in the right hand front corner. The trimmers are accessible through holes in the top of the chassis directly in front of the first i-f transformer.

The trimmers for the antenna and oscillator coils are located on the variable condenser. The trimmer on the front section is for the antenna coil.

The 456 kc wave-trap is mounted on the metal strip at the rear of the chassis directly behind the variable condenser. The trimmer for the 456 kc wave-trap is mounted on the coil and is accessible from the bottom of the chassis.

I-f and Wave-trap Alignment

Rotate the wave-band switch (located at the rear of the chassis) to the broadcast position, clockwise, and swing the variable condenser to the minimum capacity position. Feed 456 kc to the grid-cap of the 6A7 tube and adjust the four i-f trimmers for maximum response. Feed 456 kc through a .0001 mf condenser to the antenna lead and adjust the wave-trap trimmer for *minimum* response. (See General Notes, paragraph No. 7.)

R-f Alignment

With the wave-band switch in the broadcast position, clockwise, set the dial pointer at 140. Feed 1400 kc through a .0001 mf condenser to the antenna lead and adjust first the oscillator trimmer (on rear section of variable condenser) then the antenna trimmer (on front section of variable condenser) for maximum response. The police band is self-tracking and does not require any adjustment.

Voltage rating ..... 105-125 volts, a.c. or d.c.
Power consumption ..... 50 watts.
Frequency ranges ..... 540 to 1580 kc and 1580 to 4200 kc.

GENERAL NOTES

1. If replacements are made or the wiring disturbed in the r-f section of the circuit, the receiver should be carefully realigned.
2. One side of the power line is directly grounded to the chassis base. Under no circumstances, therefore, should a ground wire be permitted to come in contact with any metal part of the receiver.
3. The filament dropping resistor (R-12—see schematic) is a resistance wire in the special line cord. The cord will, therefore, become warm under normal operating conditions. To insure good heat radiation stretch out the line cord to its full length. Do not attempt to shorten it by cutting.
4. In operating the receiver on d.c. it may be necessary to reverse the line plug for correct polarity.
5. The color coding of the i-f transformer leads is as follows:
   Grid—green — Plate—blue
   Grid return—black — B plus—red.
6. In congested areas where the installation of a large antenna is not desirable we recommend the use of the Emerson Flexible Mast Antenna, Model W-82. Instructions for the installation of this compact and efficient antenna are supplied with each kit.
   Where the Flexible Mast is installed permanently, it is urgently recommended that the receiver antenna wire be cut. Leave just enough of this wire to reach from the receiver to the window strip connector.
7. The wave-trap in the receiver has been adjusted for maximum signal rejection at 456 kc. If, however, persistent interference is experienced from some particular telegraphic station, readjust the wave-trap trimmer until the response from the interfering station is at a minimum.

Tube Data

The tube complement is as follows:
1—6A7, pentagrid oscillator-modulator.
1—6D6, first i-f amplifier.
1—6Q7, diode detector, a-f amplifier, a.v.c.
1—25L6, beam power output.
1—25Z5, dual half-wave rectifier.

All octal-base tubes are replaceable with either metal or equivalent octal-base glass tubes.

EMERSON RADIO & PHONO. CORP.

MODEL AV 193
Chassis AV
Schematic, Voltage
Tuner

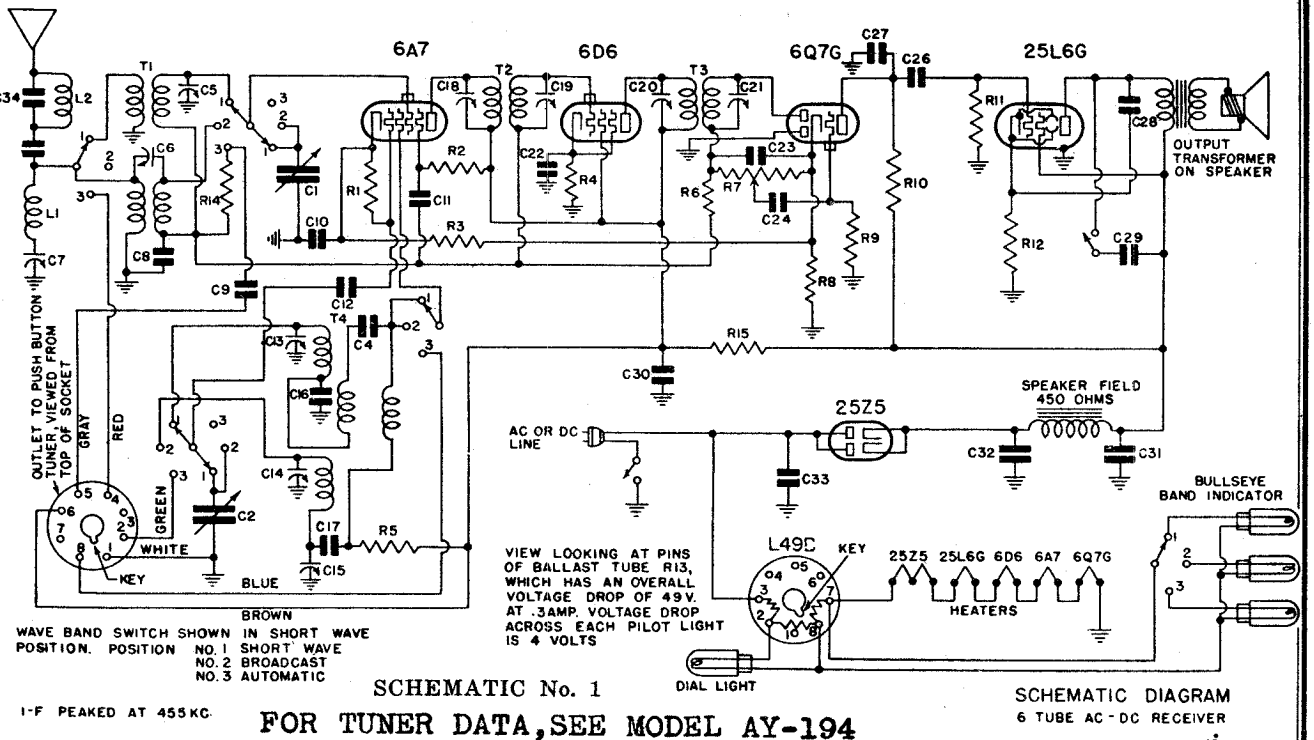

SCHEMATIC No. 1

SCHEMATIC DIAGRAM
6 TUBE AC-DC RECEIVER

I-F PEAKED AT 455 KC.

FOR TUNER DATA, SEE MODEL AY-194

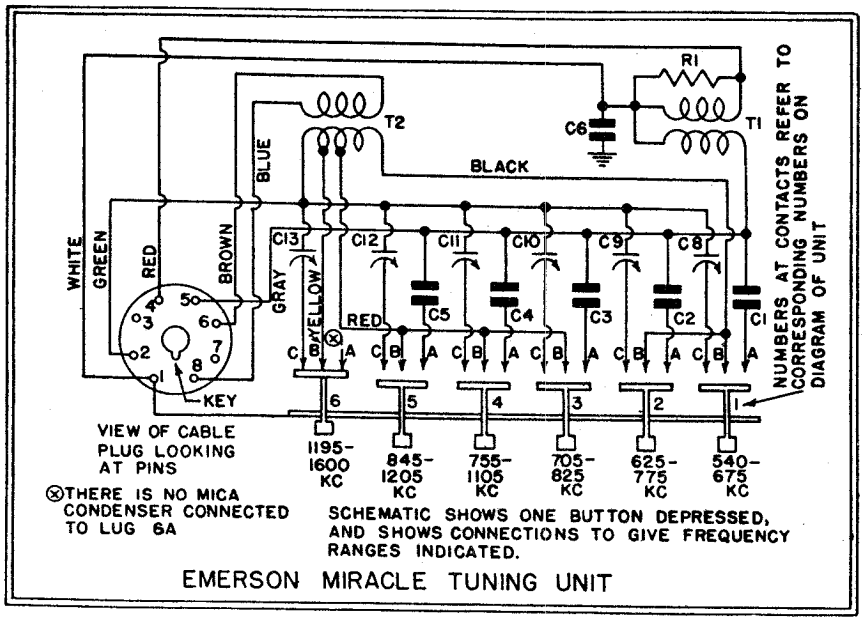

SCHEMATIC No. 2

Tube Data

The tube complement is as follows:
1—6A7, pentagrid oscillator-modulator.
1—6D6, first i-f amplifier.
1—6Q7G, diode detector, a-f amplifier, a.v.c.
1—25L6G, beam power output.
1—25Z5, dual half-wave rectifier.
1—L49D or L49DG, ballast tube.
All octal-base tubes may be replaced with either metal or equivalent octal-base glass tubes.

Voltage rating ..... 105-125 volts, a.c. or d.c.
Power consumption ..... 50 watts.
Frequency ranges ..... 540 to 1,730 kc, and 5.6 to 18.0 megacycles.

MODEL AV-193 CHASSIS MODEL AV

VOLTAGE ANALYSIS

Readings should be taken with a 1000 ohms-per-volt meter. Voltages listed below are from point indicated to ground (chassis) with the volume control turned on full and no signal. All readings except cathode and heater voltages were taken on 250 volt scale. Line voltage for all readings was 117.5 volts, 60 cycles, a.c.

Tube	*Plate*	*Screen*	*Cathode*	*Osc. Plate*	*Fil.*
6A7	104	45	2.3	82	6.3
6D6	104	104	3.8	—	6.3
6Q7G	45	—	1.2	—	6.3
25L6G	95	104	6.2	—	25.0

Voltage at 25Z5 cathode—133 volts.
Voltage across speaker field—29 volts.
Voltage drop across ballast tube (pins Nos. 3, 7)—49 volts.
Voltage drop across pilot light sections of ballast tube (pins Nos. 8, 7); (pins Nos. 2, 8)—4 volts.

©John F. Rider, Publisher

©John F. Rider, Publisher

REPLACEMENT PARTS LIST

List Price Effective as of June 1st, 1938 (Subject to change without notice)

SCHEMATIC No. 1

*Item	Part No.	DESCRIPTION	PRICE
L2, C34	4VT-419	455 kc fixed wave-trap	$ .70
T1	4RT-418	Two-band antenna coil	1.85
T2	4VT-420	455 kc first i-f transformer	1.35
T3	4VT-421A	455 kc second i-f transformer	1.25
T4	4VT-417	Two-band oscillator coil	1.50
R1	KR-53	50,000 ohm ½ watt carbon resistor	.16
R2	ZZR-196A	30,000 ohm ½ watt carbon resistor	.16
R3	3RR-276	310 ohm ½ watt wire-wound resistor	.16
R4	3CR-295	410 ohm ½ watt wire-wound resistor	.16
R5	LR-65	10,000 ohm ½ watt carbon resistor	.16
R6, R9	HR-42A	2 megohm ½ watt carbon resistor	.16
R7	3FR-256B	500,000 ohm volume control with line switch	1.00
R8, R15	3CR-294	240 ohm ½ watt wire-wound resistor	.16
R10	KR-55	250,000 ohm ½ watt carbon resistor	.16
R11	KR-56	500,000 ohm ½ watt carbon resistor	.16
R12	3FR-293	140 ohm ½ watt wire-wound resistor	.16
	L-49D	Plug-in type ballast tube (L49D or L49DG are interchangeable)	.55
R14	KR-57	1 megohm ½ watt carbon resistor	.16
C1, C2	4VC-369	Two-gang variable condenser	4.15
C3	NNC-199	0.001 mf, 600 volt tubular condenser	.20
†C5, C6, C7		Trimmer, part of antenna coil assembly.	
C8, C29	BC-12	0.05 mf, 200 volt tubular condenser	.20
C9	3RC-373	0.0004 mf, 600 volt tubular or mica condenser	.20
C10, C22, C30	AC-6	0.1 mf, 200 volt tubular condenser	.20
C11	KC-59	0.006 mf, 400 volt tubular condenser	.20
C12, C4	AAC-106A	0.00005 mf mica condenser	.20
†C13, C14		Trimmer, part of oscillator coil assembly.	
C15	2NC-231	Single adjusting padding condenser. Range: 300 to 600 mmf	.35
C16	3EC-267	0.0042 mf mica condenser	.40
C17, C24	KC-58	0.01 mf, 400 volt tubular condenser	.20
†C18, C19		Trimmer, part of first i-f transformer.	
†C20, C21		Trimmer, part of second i-f transformer.	
C23, C27	5AC-384	0.0002 mf, 600 volt tubular or mica condenser	.20
C26, C28	LC-65	0.02 mf, 400 volt tubular condenser	.20
C31	3CC-337	40 mf, 150 volt wet electrolytic condenser	.90
C32	3CC-261	20 mf, 150 volt wet electrolytic condenser	.80
C33	2VC-242A	0.1 mf, 400 volt molded paper condenser	.20
	4BL-94	Pilot light, 6.3 volt, .25 amp., Mazda No. 44	.20
	3CS-254	6½" dynamic speaker	4.80
	3ES-256E	Tone control switch	.50
	4VS-315	Wave-band switch	1.40
	5FZ-755	Dial face	.10
	3CZ-336A	Drive belt	.15
	3CZ-337C	Drive shaft and pulley	.10
	3CZ-339	Idler pulley	.05
	3CZ-340	Idler spring	.03
	3CZ-341	Condenser shaft pulley	.10
	4MZ-588	Dial pointer	.20
	3CZ-350	Escutcheon with crystal	1.25
	4VZ-724	Push-button escutcheon	1.00

MIRACLE TUNING UNIT PARTS (Schematic No. 2)

T1	4YT-424	Antenna coil	.50
T2	4VT-412	Oscillator coil	.65
C1	AC-7A	.00025 mf mica condenser	.20
C2	4ZC-383A	.00018 mf mica condenser	.20
C3	4ZC-382A	.00012 mf mica condenser	.20
C4	4ZC-381A	.000075 mf mica condenser	.20
C5	AAC-106A	.00005 mf mica condenser	.20
C6	NNC-199	.001 mf, 600 volt tubular condenser	.20
‡C8, C9, C10, C11, C12, C13	4VC-368	Dual trimming condenser	.40
R1	TTR-261	3000 ohm, ¼ watt carbon resistor	.16
	4VS-309	6 gang push-button selector switch	2.40
	4VZ-721	6 wire cable with octal plug assembly	1.75
	4VZ-732	Push-button	.05
	4VZ-763	Celluloid push-button cap	.01
	4VZ-713	Trimmer button	.05
	4VZ-725	Station name-tab cards (complete set)	.65

When ordering replacement parts specify part numbers.

*Item number locates the article on the schematic diagram.

†These trimmers are part of coil assemblies and cannot be supplied separately.

‡These trimmers are supplied in pairs.

An oscillator with frequencies of 455, 600, 1400 and 15,000 kc should be used.

In addition an output meter should be used across the voice coil or output transformer for observing maximum response.

The set's oscillator is higher in frequency than the signal, so images should be observed on the low frequency side of the signals.

ADJUSTMENTS

Always choose the minimum capacity peak on oscillator trimmers and maximum capacity peaks on antenna trimmers. The last motion in adjusting trimmers should always be a tightening one, not a loosening one.

Always use as weak a test signal as possible during alignment.

Never leave a trimmer with the outside plate so loose that there is no tension on the screw. Either bend the plate up or remove the screw entirely.

Location of Coils and Trimmer Adjustments

The broadcast antenna coil, the short-wave antenna coil and 455 kc wave-trap are one assembly mounted underneath the chassis deck to the right of the variable condenser. The trimmers for these coils are accessible through three holes in the top of the chassis. The trimmer farthest from the front of the chassis is for the 455 kc trap. The central trimmer is for the broadcast antenna coil and the trimmer closest to the chassis front is for the short-wave antenna coil.

The broadcast and short-wave oscillator coils are on one form, which is mounted on the inside of the rear of the chassis wall. The trimmers for these coils are accessible through holes in the back of the chassis. Looking at the rear of the chassis, the left-hand trimmer is for short-wave and the right-hand trimmer for broadcast.

The two i-f transformers are in oblong cans located on the top of the chassis. The first i-f transformer is the one behind the variable condenser. The second i-f transformer is the one located just to the right of the speaker.

The broadcast series padding condenser is located on the top of the chassis to the left of the variable condenser.

I-f Transformer and Wave-Trap Alignment

Turn the switch to the broadcast position and rotate the variable condenser to the minimum capacity position. Feed 455 kc to the grid cap of the 6A7 tube through a .02 mf condenser and adjust the four i-f trimmers for maximum response. Feed 455 kc to the antenna through a .0002 mf condenser and adjust the wave-trap trimmer (rear screw, to the right of variable condenser) for *minimum response.* **(See General Note, No. 8.)**

Short-wave Alignment

Use a dummy antenna (400 ohm resistor) when aligning the short-wave coils.

Rotate the wave-band switch counter-clockwise to the short-wave position and set the dial to 15 megacycles. Feed 15 megacycles through the dummy antenna and adjust the short-wave oscillator trimmer (screw to left of variable, closest to 6A7) for maximum response and then adjust the short-wave antenna trimmer (screw to right of variable condenser, closest to front of chassis) for maximum response. The variable condenser should be rocked while adjusting the antenna trimmer (rotate variable condenser rotor shaft back and forth through a small arc).

Broadcast Alignment

Rotate the wave-band switch to the broadcast position (central) and set dial at 60. Feed 600 kc through a standard dummy antenna (a .0002 mf condenser may be used as a substitute). Adjust the broadcast series padder (screw to left of variable condenser, near front of chassis) for maximum response. Rotate the dial to 140, feed 1400 kc and adjust the broadcast oscillator trimmer (screw to left of variable, nearest electrolytic) for maximum response and then the antenna trimmer (center screw to right of variable) for maximum response. Return dial to 60, feed 600 kc and readjust the series padder, rocking the variable condenser for maximum response.

GENERAL NOTES

1. If replacements are made or the wiring disturbed in the r-f portion of the circuit, the receiver should be carefully re-aligned.
2. One side of the power line is directly grounded to the chassis base. Under no circumstances, therefore, should a ground wire be permitted to come in contact with any metal part of the receiver.
3. The filament dropping resistor (L-49D on schematic) is in a special tube at the rear of the chassis. This tube will become quite hot under normal operating conditions. For voltage drop specifications, see below.
4. When operating the receiver on d.c. it may be necessary to reverse the line plug to obtain the correct polarity.
5. The two i-f transformers are held to the chassis by snap-on fasteners. To remove an i-f, unsolder all its leads under the chassis, pinch together the prongs of the snap-on fastener and lift the i-f can from the chassis.
6. The color coding of the i-f transformer leads is as follows:

   Grid-green — Plate—blue
   Grid return—black — B plus—red
7. An efficient antenna system is necessary to enable a full realization of the merits of the receiver. For reduction of noise and achievement of high efficiency on all frequency ranges the Emerson All-Wave High Fidelity Antenna, Model W-78, and the Emerson All-Wave Antenna System, Model W-89, are recommended. Instructions for the installation of these antennas are supplied with each kit.

   In congested areas where the installation of a large antenna is not desirable we recommend the use of the Emerson Flexible Mast Antenna, Model W-82. Instructions for the installation of this compact and efficient antenna are supplied with each kit.
8. The wave-trap in the receiver has been adjusted for maximum signal rejection at 455 kc. If, however, persistent interference is experienced from some particular telegraphic station, readjust the wave-trap trimmer until the response from the interfering station is at a minimum.

The receivers are adjusted at the factory so that the entire broadcast frequency range is divided, and so covered, by the six buttons. In rare cases where two or more of the desired stations fall within the frequency range of one button, the internal connections in the automatic unit may be changed so that any of these stations may be selected by the automatic unit. The changes to be made are simple, and may be accomplished by following the instructions given in these notes.

Schematic.Voltage Alignment,Parts

EMERSON RADIO & PHONOGRAPH CORP.

MODELS BA199,BA201 Chassis BA

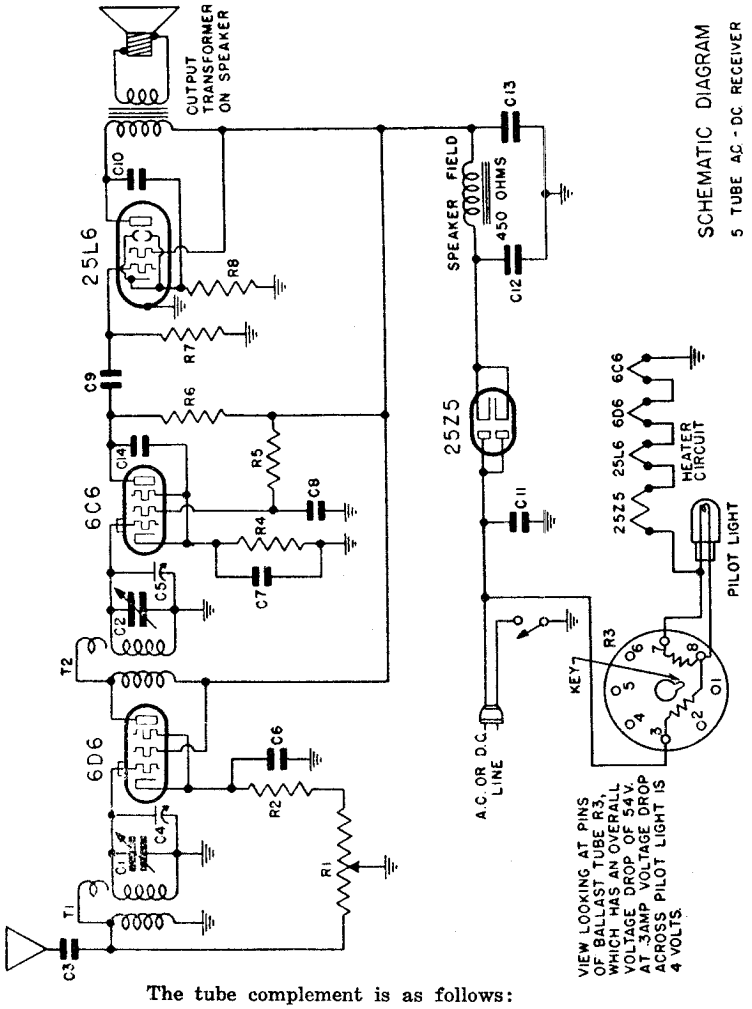

SCHEMATIC DIAGRAM
5 TUBE AC - DC RECEIVER

VOLTAGE ANALYSIS

Readings should be taken with a 1000 ohms-per-volt meter. Voltages listed below are from point indicated to ground (chassis) with volume control turned on full and no signal. The line voltage for these readings was 117.5 volts, 60 cycles, a.c.

Tube	*Plate*	*Screen*	*Cathode*	*Fil.*
6D6	100	100	2.3	6.3
6C6	30	15	2.1	6.3
25L6G	93	100	6	25.0

Voltage across speaker field—26 volts.
25Z5 cathode to ground—126 volts.

ALIGNMENT PROCEDURE

An oscillator with a frequency of 1400 kc. is required.
Use as weak a test signal as possible. An output meter should be used across the voice coil or output transformer for observing maximum response.

Rotate variable condenser to the maximum capacity position and set the pointer at the next calibration mark beyond 55. Then rotate the variable condenser until the pointer is at 140 and feed 1400 kc to the antenna through a .0001 mf mica condenser and adjust both trimmer condensers on the variable condenser for maximum response.

The tube complement is as follows:
1—6D6, r-f amplifier.
1—6C6, biased detector.
1—25L6G, beam power output.
1—25Z5, dual half-wave rectifier.
1—L55BG, ballast tube.

Voltage rating ..... 105 to 125 volts, a.c. or d.c.
Power consumption ..... 45 watts
Frequency range ..... 540 to 1725 kc.

*ITEM	PART NO.	DESCRIPTION	PRICE
T1	5AT-422	Broadcast antenna coil	$ .50
T2	5AT-423	Broadcast detector coil	.50
R1	2VR-219D	Volume control—75000 ohms, with line switch	1.00
R2	3CR-294	240 ohm, ½ watt wire-wound resistor	.16
R3	L55-BG	Plug-in ballast tube	.55
R4	OR-73U	25000 ohm, ¼ watt carbon resistor	.16
R5	HR-42U	2 megohm, ¼ watt carbon resistor	.16
R6, R7	KR-56U	500,000 ohm, ¼ watt carbon resistor	.16
R8	3QR-297	110 ohm, ½ watt wire-wound resistor	.16
C1, C2	5AC-376	Two-gang variable condenser	2.40
C3	NNC-199	.001 mf, 600 volt tubular condenser	.20
†C4, C5		Trimmers, part of variable condenser.	
C6, C8	AC-6	.1 mf, 200 volt tubular condenser	.20
C7	BC-13	.25 mf, 200 volt tubular condenser	.20
C9	LC-65	.02 mf, 400 volt tubular condenser	.20
C10	LC-64	.05 mf, 400 volt tubular condenser	.20
C11	EEC-132	.1 mf, 400 volt tubular condenser	.20
C12, C13	4DC-345A	Dual 16 mf, 100 volt dry electrolytic condenser	1.20
C14	5AC-384	.0002 mf, 600 volt tubular condenser	.20
	3TS-312	5" dynamic speaker	4.20
	XL-9	Pilot light, 6.3 volt, .25 amp., Mazda No. 46	.20
	5AZ-745	Brass condenser pulley	.05
	5AZ-746	Brass condenser pulley	.05
	5AZ-747	Dial pointer	.05
	3RZ-484	Drive cord	.02
	3RZ-519	Drive cord spring	.02
	5AZ-792	Dial face	.05
	5AZ-779A	Dial crystal for Model BA-199	.05
	5AZ-794	Dial crystal for Model BA-201	.10

List Price as. Effective as of Feb. 15, 1938

PRICES SUBJECT TO CHANGE WITHOUT NOTICE

©John F. Rider, Publisher

©John F. Rider, Publisher

MIRACLE TUNING UNIT

Pre-adjustment of Station Buttons

The six push-buttons provide a choice of six favorite stations for Miracle Tuning. Adjustments for any particular station must be made by means of the small cross-slotted button next to the chosen push-button. The following procedure must be carefully observed in making these adjustments.

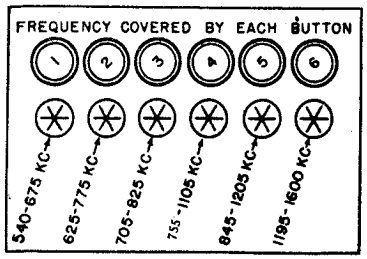

Fig. 1

NOTE: The above illustration will also be found on a label on the cabinet.

1. Select six (or less) nearby broadcast stations desired for Miracle Tuning and determine their frequencies. Stations are usually listed in newspapers with their frequencies in kilocycles.
2. The frequency range covered by each button is shown in the Fig. 1 at the left. Of the chosen stations select the one with the lowest frequency. The button with a frequency range which includes this station frequency is the one to be adjusted for that particular station.

   For example, a desired station has a frequency of 600 kilocycles. Button No. 1 covers a range of 540 to 675 kilocycles. This button, therefore, is the one to be used for that station.

   Where a station has a frequency which falls within the ranges of two buttons use the button with the lower frequency range except when this lower button has already been reserved for another station.
3. Locate the station call letters on one of the four cards supplied in an envelope with the receiver. Push out the circular tab bearing the station call letters from the card. Remove the clear celluloid disc from the chosen push-button by prying with a small sharp instrument at the notch on the side of the button.

   Remove the printed tab from the button and replace it with the proper tab. Replace the celluloid disc over this tab and press it in firmly.
4. Turn the receiver on and wait at least 15 minutes in order that all of the internal parts of the receiver attain a uniform temperature. Rotate the wave-band switch to the central position for broadcast reception. Tune in the desired station by means of the station selector knob. Rotate the wave-band switch to the automatic position, clockwise. Press in the push-button to be used for this station. Be sure this button is pushed all the way in until a click is heard and the button remains depressed. The cross-slotted button next to the selected push-button is the one to be adjusted. (See Fig. 2.) Insert a small thin coin in one of the slots in the button and rotate it slowly in either direction until the desired station is heard. Once the station is heard rotate the adjusting button back and forth through a very small arc until the station is received at maximum volume and the reception is clear and undistorted. Check to be sure that you have adjusted the button for the proper station by rotating the wave-band switch for a moment to the broadcast position (central) and then back to the automatic position.
5. Select the desired station of the next highest frequency and adjust the proper button, carefully observing the procedure outlined above. In similar fashion adjust for any remaining stations chosen.
6. Once the buttons have been adjusted a slight readjustment of each button may be necessary. Starting with the first button repeat the entire adjusting procedure, being very careful to adjust the buttons to the middle of the stations. When rotating the adjusting button, do not exert any undue pressure on it since this may disturb the final adjustment.

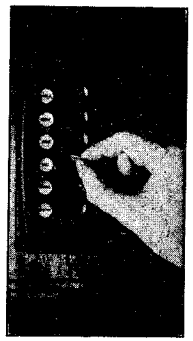

Adjusting the Button With a Coin.
Fig. 2

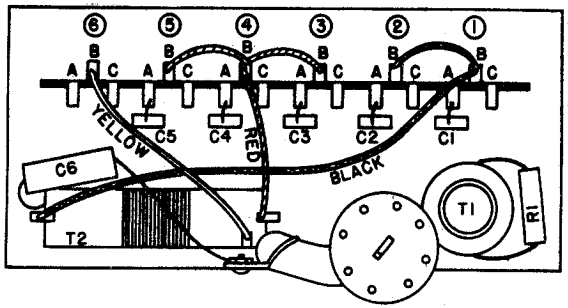

Fig. 3. Rear View of Push button Unit

The Switching Assembly

Removal of the rear cover from the shield box will show switch lugs arranged in groups of three's as indicated in the diagram. Lugs lettered B for each button are connected to the oscillator taps which have the following frequency ranges.

Black covered wire—540-775 kc.
Red covered wire—705-1205 kc.
Yellow covered wire—1195-1600 kc.

Lugs lettered A for each button are connected to fixed condensers (C1, C2, C3, C4, C5) which tune the antenna coil properly in each of the following bands, respectively:

1. 540-675 kc.
2. 625-775 kc.
3. 705-825 kc.
4. 755-1105 kc.
5. 845-1205 kc.
6. 1195-1600 kc.

Lugs lettered C are connected to adjustable trimming condensers (C8, C9, C10, C11, C12, C13) which tune the oscillator coil.

All of these trimmers have the same capacity range.

Change of Internal Connections

If the button covering a certain frequency band is already in use and it is desired to tune in another station in that same band, the range of any other button may be changed to accommodate that station by observing the following procedure:

(It is not necessary to remove the tuning assembly from the shield box.)

1. Place the box in a position which corresponds to Fig. 3 above. Disconnect the molded mica condenser (C1 or C2 or C3 or C4 or C5) from lug A of the button to be changed and, with a short piece of wire reconnect this lug A to lug A of the button which covers the desired range and is already in use. DO NOT DISCONNECT THE MOLDED MICA CONDENSER WHICH IS ATTACHED TO THE BUTTON IN USE.
   To allow for future changes tape-up the end of the disconnected molded condenser.
2. If lug B of the button being changed is already connected to the colored tap lead which includes the desired frequency no further operation is necessary. However, if lug B is not connected to an oscillator tap which includes the desired frequency then remove any wires from lug B and reconnect this lug with another piece of wire to any other lug B which already is connected to the tap-lead of the correct color (band).
3. Tune in the new station and check the results. Replace rear cover on the box and mount the box in the cabinet. Insert proper station name-tabs and retune all stations.

EXAMPLES

Button 4 is in use and it is desired to shift button 5 to tune in a station on 830 kc.

1. Cut C5 (50 mmf) mica condenser from lug 5A. (Tape end.)
2. Connect lug 5A to lug 4A. (Button 4 covers the desired frequency.)
3. Since lug 5B is already connected to the red oscillator lead which includes 830 kc. in its range, the operation has been completed. Retune the new station.

Button 2 is in use and it is desired to shift button 3 to tune in a station on 700 kc.

1. Cut C3 (120 mmf) mica condenser from lug 3A. (Tape end.)
2. Connect lug 3A to lug 2A. (Button 2 covers the desired frequency.)
3. Disconnect the wire joining lug 3B to the red oscillator lead at 4B and resolder to lug 2B where it will connect with the black oscillator lead which covers the desired frequency. Retune the new station.

GENERAL NOTES

1. If replacements are made or the wiring disturbed in the r-f portion of the circuit, the receiver should be carefully re-aligned.
2. One side of the power line is directly grounded to the chassis base. Under no circumstances, therefore, should a ground wire be permitted to come in contact with any metal part of the receiver.
3. The filament dropping resistor (R13 on schematic) is in a special metal tube at the rear of the chassis. This tube will become quite hot under normal operating conditions. For voltage drop specifications, see below.
4. When operating the receiver on d.c. it may be necessary to reverse the line plug to obtain the correct polarity.
5. The two i-f transformers are held to the chassis by snap-on fasteners. To remove an i-f, unsolder all its leads under the chassis, pinch together the prongs of the snap-on fastener and lift the i-f can from the chassis.
6. The color coding of the i-f transformer leads is as follows:
   Grid-green — Plate—blue
   Grid return—black — B plus—red
7. An efficient antenna system is necessary to enable a full realization of the merits of the receiver. For reduction of noise and achievement of high efficiency on all frequency ranges the Emerson All-Wave High Fidelity Antenna, Model W-78, and the Emerson All-Wave Antenna System, Model W-89, are recommended. Instructions for the installation of these antennas are supplied with each kit.

   In congested areas where the installation of a large antenna is not desirable we recommend the use of the Emerson Flexible Mast Antenna, Model W-82. Instructions for the installation of this compact and efficient antenna are supplied with each kit.
8. The wave-trap in the receiver has been adjusted for maximum signal rejection at 456 kc. If, however, persistent interference is experienced from some particular telegraphic station, readjust the wave-trap trimmer until the response from the interfering station is at a minimum.
9. To change the dial light the chassis should be removed from the cabinet.
10. Model AY receivers are adjusted at the factory so that the entire broadcast frequency range is divided, and so covered, by the six buttons. In rare cases where two or more of the desired stations fall within the frequency range of one button, the internal connections in the automatic unit may be changed so that any of these stations may be selected by the automatic unit. The changes to be made are simple, and may be accomplished by following the instructions given in these notes.

EMERSON RADIO & PHONO. CORP.

MODELS AY194, AY195
Chassis AY
MODEL BD197
Chassis BD
Schematics

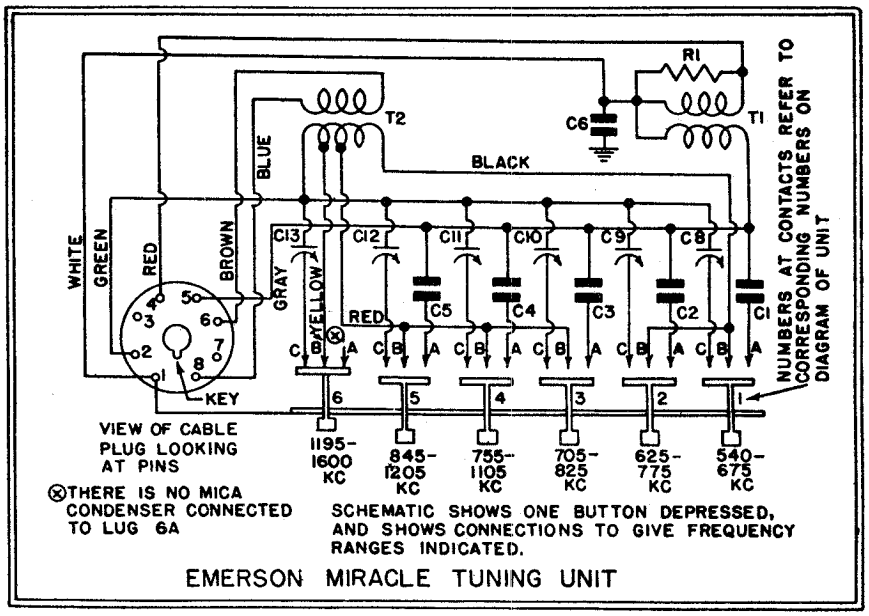

Schematic No. 3

Tube Data

The tube complement is as follows:

1—6A7, pentagrid oscillator-modulator.
1—6D6, first i-f amplifier.
1—6Q7, diode detector, a-f amplifier, a.v.c.
1—25L6, beam power output.
1—25Z5, dual half-wave rectifier.
1—3CR-241, ballast tube (R13 on schematic).

All octal-base tubes may be replaced with either metal or equivalent octal-base glass tubes.

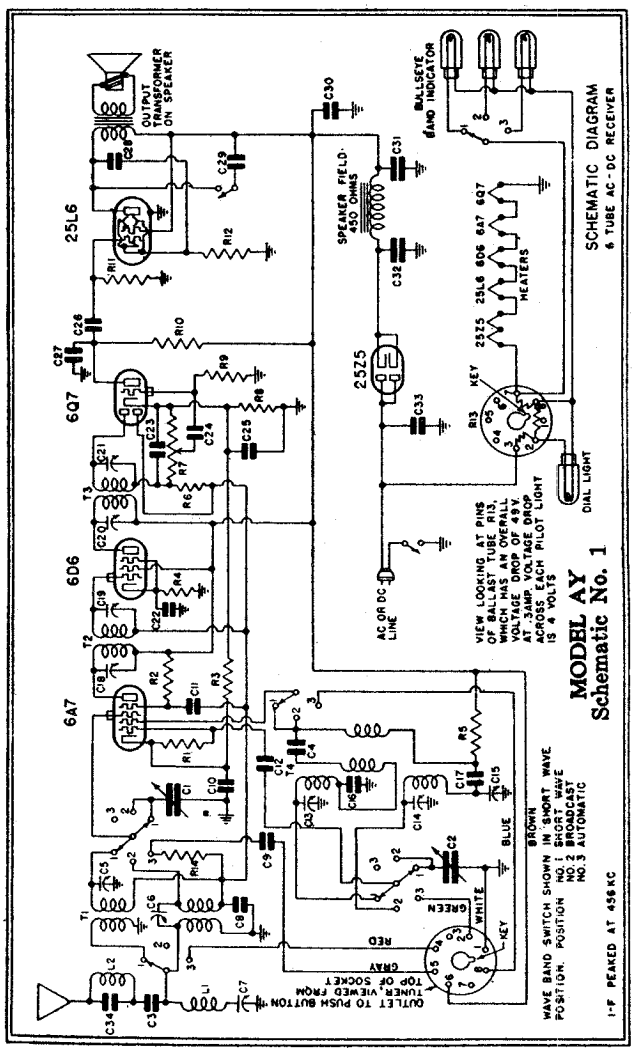

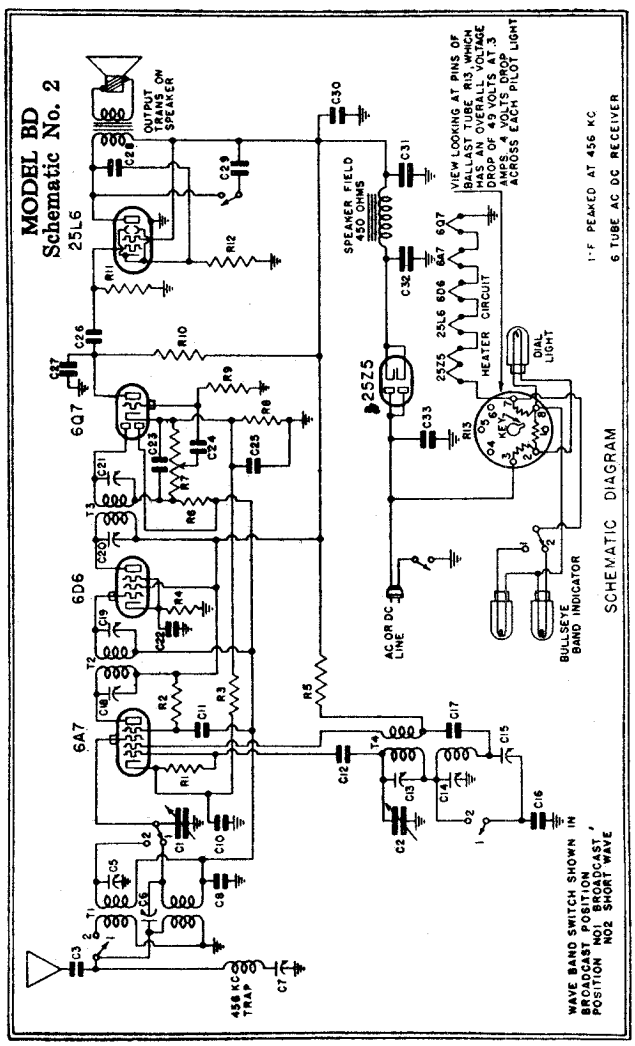

©John F. Rider, Publisher

©John F. Rider, Publisher

REPLACEMENT PARTS LIST

FOR CHASSIS MODELS BD AND AY

List Prices as of Effective as of Mar. 1st, 1938 (Subject to change without notice)

*Item	Part No.	DESCRIPTION	PRICE
T1	4RT-418	Two-band antenna coil	$1.75
T2	4VT-420	456 kc first i-f transformer	1.35
T3	4VT-421	456 kc second i-f transformer	1.30
R1	KR-53	50,000 ohm ¼ watt carbon resistor	.16
R2	ZZR-196	30,000 ohm ¼ watt carbon resistor	.16
R3	3RR-276	310 ohm ½ watt wire-wound resistor	.16
R4	3CR-295	410 ohm ½ watt wire-wound resistor	.16
R5	LR-65	10,000 ohm ¼ watt carbon resistor	.16
R6, R9	HR-42	2 megohm ¼ watt carbon resistor	.16
R7	3ZR-288	500,000 ohm volume control with line switch	1.05
R8	3CR-294	240 ohm ½ watt wire-wound resistor	.16
R10	KR-55	250,000 ohm ¼ watt carbon resistor	.16
R11	KR-56	500,000 ohm ¼ watt carbon resistor	.16
R12	3FR-293	140 ohm ½ watt wire-wound resistor	.16
R13	3CR-241	Plug-in type ballast tube	.80
C1, C2	4VC-377	Two-gang variable condenser	3.30
C3	NNC-199	0.001 mf, 600 volt tubular condenser	.20
†C5, C6, C7		Trimmer, part of antenna coil assembly.	
C8, C29	BC-12	0.05 mf, 200 volt tubular condenser (see Production Changes)	.20
C10, C22			
C25, C30	AC-6	0.1 mf, 200 volt tubular condenser (see Production Changes)	.20
C11	KC-59	0.006 mf, 400 volt tubular condenser	.20
C12	AAC-106A	0.00005 mf mica condenser	.20
†C13, C14		Trimmer, part of oscillator coil assembly.	
C15	2NC-231	Single adjusting padding condenser. Range: 300 to 600 mmf	.50
C16	3EC-267	0.0042 mf mica condenser	.40
C17, C24	KC-58	0.01 mf, 400 volt tubular condenser	.20
†C18, C19		Trimmer, part of first i-f transformer.	
†C20, C21		Trimmer, part of second i-f transformer.	
C23, C27	5AC-384	0.0002 mf, 600 volt tubular condenser	.20
C26, C28	LC-65	0.02 mf, 400 volt tubular condenser (see Production Changes)	.20
C31	3CC-337	40 mf, 150 volt wet electrolytic condenser	.90
C32	3CC-261	20 mf, 150 volt wet electrolytic condenser	.90
C33	2VC-242A	0.1 mf, 400 volt molded paper condenser	.20
	4BL-94	Pilot light 6.3 volt .25 amp. Mazda No. 44	.20
	3CS-254A	6½" dynamic speaker	5.10
	4ZM-347	Condenser drive pulley	.60
	4VZ-739	Conical dial face	1.30
	4XZ-722	Conical escutcheon with crystal	1.90
	4YZ-773	Drive cord springs	.05
	4YZ-772	Drive cord	.02
	4YZ-754	Drive shaft and pulley	.20
	3ES-256	Tone control switch (see Production Changes)	.50
		THESE PARTS USED IN MODEL AY ONLY	
T4	4VT-417	Two-band oscillator coil	1.40
L2, C34	4VT-419	456 kc fixed wave-trap	.55
R14	KR-57	1 megohm ¼ watt carbon resistor	.16
C9	3RC-373	0.0004 mf, 600 volt tubular condenser	.20
C4	AAC-106A	0.00005 mf mica condenser	.20
	4VS-315	Wave-band switch	1.40
		THESE PARTS USED IN MODEL BD ONLY	
T4	3CT-290A	Two-band oscillator coil	1.35
	5DS-318	Wave-band switch	.80
	5DZ-783	Conical speaker grille assembly	1.80

MIRACLE TUNING UNIT PARTS (Schematic No. 3)

T1	4YT-424	Antenna coil	$ .80
T2	4VT-412	Oscillator coil	.65
C1	AC-7A	.00025 mf mica condenser	.20
C2	4ZC-383A	.00018 mf mica condenser	.20
C3	4ZC-382A	.00012 mf mica condenser	.20
C4	4ZC-381A	.000075 mf mica condenser	.20
C5	AAC-106A	.00005 mf mica condenser	.20
C6	NNC-199	.001 mf, 600 volt tubular condenser	.20
‡C8, C9, C10, C11, C12, C13	4VC-368	Dual trimming condenser	.40
R1	TTR-201	3000 ohm, ¼ watt carbon resistor	.16
	4VS-309	6 gang push-button selector switch	2.55
	4VZ-721	6 wire cable with octal plug assembly	1.75
	4VZ-732	Push-button	.05
	4VZ-763	Celluloid push-button cap	.01
	4VZ-713	Trimmer button	.05
	4VZ-725	Station name-tab cards (complete set)	.45

When ordering replacement parts specify part numbers.

*Item number locates the article on the schematic diagram.
†These trimmers are part of coil assemblies and cannot be supplied separately.
‡These trimmers are supplied in pairs.

PRODUCTION CHANGES

BD Chassis bearing serial numbers above 1,580,950 differ from the schematic as follows:
(a) C25, C28 and C29 have been removed.
(b) C27 is connected from 25L6 grid to cathode.
(c) A 4 point tone control has been added, consisting of the following parts:

One tone control switch, part no. 4ZS-317A	price	.80
One 0.04 mf, 400 volt tubular condenser, part no. 4DC-349	price	.20
One 0.07 mf, 400 volt tubular condenser, part no. 5DC-389	price	.20

ADJUSTMENTS

An oscillator with frequencies of 456, 600, 1400 and 15,000 kc should be used.

In addition an output meter should be used across the voice coil or output transformer for observing maximum response.

The set's oscillator is higher in frequency than the signal, so images should be observed on the low frequency side of the signals.

Always choose the minimum capacity peak on oscillator trimmers and maximum capacity peaks on antenna trimmers. The last motion in adjusting trimmers should always be a tightening one, not a loosening one.

Always use as weak a test signal as possible during alignment.

Never leave a trimmer with the outside plate so loose that there is not tension on the screw. Either bend the plate up or remove the screw entirely.

Location of Coils and Trimmer Adjustments:

The broadcast antenna coil, short wave antenna coil, and 456 kc wave trap are one assembly mounted underneath the chassis deck to the right of the variable condenser. The trimmers for these coils are accessible through three holes in the top of the chassis. *The trimmer closest to the front of the chassis is for the short wave antenna coil. The central trimmer is for the broadcast antenna coil. The trimmer farthest from the front of the chassis is for the* 456 *kc trap.*

The broadcast and short-wave oscillator coils are on one form which is mounted below and to the left of the variable, just behind the wave-band switch. The trimmers for these coils are accessible through two holes in the top of the chassis. The trimmer closest to the variable condenser is for the short-wave oscillator coil and the trimmer farthest from it is for the broadcast oscillator coil.

The two i-f transformers are in oblong cans located on the top of the chassis. The first i-f transformer is the one behind and to the left of the variable condenser. The second i-f transformer is the one located just to the right of the speaker.

The broadcast series padding condenser is located on the top of the chassis to the left of the variable condenser.

I-f Transformer and Wave-Trap Alignment

Turn the switch to the broadcast position and rotate the variable condenser to the minimum capacity position. Feed 456 kc to the grid cap of the 6A7 tube through a .02 mf condenser and adjust the four i-f trimmers for maximum response. Feed 456 kc to the antenna through a .0002 mf condenser and adjust the wave-trap trimmer (REAR screw, to the right of variable condenser) for *minimum response.*

NOTE: Since the dial indicator is fastened to the cabinet, a piece of wire should be fastened to the variable condenser and bent over to form a pointer when the chassis is removed from cabinet.

Short-Wave Alignment

Use a dummy antenna (400 ohm resistor) when aligning the short-wave coils.

Rotate the wave-band switch counter-clockwise to the short-wave position and set the dial to 15 megacycles. Feed 15 megacycles through the dummy antenna and adjust the short-wave oscillator trimmer (screw to left of variable, closest to 6A7) for maximum response and then adjust the short-wave antenna trimmer (SCREW CLOSEST TO FRONT OF CHASSIS) for maximum response. The variable condenser should be rocked while adjusting the antenna trimmer (rotate variable condenser rotor shaft back and forth through a small arc).

Broadcast Alignment

Rotate the wave-band switch to the broadcast position (central) and set dial at 60. Feed 600 kc through a standard dummy antenna (a .0002 mf condenser may be used as a substitute). Adjust the broadcast series padder (screw to left of variable condenser, near front of chassis) for maximum response. Rotate the dial to 140, feed 1400 kc and adjust the broadcast oscillator trimmer (screw to left of variable, nearest electrolytic) for maximum response and then the antenna trimmer (center screw to right of variable) for maximum response. Return dial to 60, feed 600 kc and readjust the series padder, rocking the variable condenser for maximum response.

VOLTAGE ANALYSIS

Readings should be taken with a 1000 ohms-per-volt meter. Voltages listed below are from point indicated to ground (chassis) with the volume control turned on full and no signal. All readings except cathode and heater voltages were taken on 250 volt scale. Line voltage for all readings was 117.5 volts, 60 cycles, a.c.

Tube	*Plate*	*Screen*	*Cathode*	*Osc. Plate*	*Fil.*
6A7	104	45	2.3	82	6.3
6D6	104	104	3.8	—	6.3
6Q7	45	—	1.2	—	6.3
25L6	95	104	6.2	—	25.0

Voltage at 25Z5 cathode—133 volts.
Voltage across speaker field—29 volts.
Voltage drop across ballast tube (pins Nos. 3, 7)—49 volts.
Voltage drop across pilot light sections (pins Nos. 8, 7); (pins Nos. 2, 8)—4 volts.

Voltage rating	105-125 volts, a.c. or d.c.
Power consumption	50 watts.
Frequency ranges	540 to 1,730 kc, and 5.6 to 18.0 megacycles.

EMERSON RADIO & PHONOGRAPH CORP.

MODEL AZ 196
Chassis AZ
Schematic, Voltage
Tuner

EMERSON MIRACLE TUNING UNIT

Voltage rating ..... 105-125 volts, 60 cycles, a.c.
Power consumption ..... 53 watts
Frequency ranges ..... 540 to 1730 kc and 5.6 to 18 megacycles

VOLTAGE ANALYSIS

Readings should be taken with a 1000 ohms-per-volt meter. Voltages listed are from point indicated to ground (chassis). All readings except cathodes, heaters, and B plus at rectifier were taken on 250 volt scale. Line voltage for these readings was 117.5 volts, 60 cycle, a.c.

Tube	*Plate*	*Screen*	*Cathode*	*Osc. Plate*	*Fil.*
6A7	227	78	0	165	6.3 a.c.
6D6	227	78	0	—	6.3 a.c.
6Q7G	105	—	0	—	6.3 a.c.
76	227	—	11.5	—	6.3 a.c.
6AC5G	213	—	0	—	6.3 a.c.

B plus at 80 filament—300 volts.
Voltage across field—75 volts.
Grid bias for all tubes is developed across resistors R10 and R11. The total voltage should be 11.5 volts. Voltage measured across R10 should be 2.25 volts. To check bias on 6A7 and 6D6 tubes, measure the values of R12, R13 and R14. See schematic.

Tube Data

The tube complement is as follows:
1—6A7, oscillator-modulator
1—6D6, I.F. amplifier
1—6Q7G, diode detector, a.v.c., a.f. amplifier
1—76, audio amplifier
1—6AC5G, power output
1—80, full-wave rectifier.

©John F. Rider, Publisher

©John F. Rider, Publisher

REPLACEMENT PARTS

*Item	Part No.	DESCRIPTION	List Price as Effective as of Mar. 1st, 1938 (Subject to change without notice) PRICE
T1, L1	4RT-418	Two-band antenna coil with 456 kc trap	$1.75
T2	4VT-417	Two-band oscillator coil	1.40
T3	4ZT-425	456 kc first i.f. transformer	1.15
T4	3RT-321A	456 kc second i.f. transformer	1.10
T5	4ZT-426	Power transformer	4.30
L2, C13	4VT-419	456 kc fixed wave-trap	.55
R1	KR-53	50,000 ohm, ¼ watt carbon resistor	.16
R2	YR-97	15,000 ohm, ½ watt carbon resistor	.16
R3, R7	KR-57	1 megohm, ¼ watt carbon resistor	.16
R4	3R-12	25,000 ohm, 1 watt carbon resistor	.16
R5	3HR-247	40,000 ohm, ½ watt carbon resistor	.16
R6, R9	KR-55	250,000 ohm, ¼ watt carbon resistor	.16
R8, R13	HR-42	2 megohm, ½ watt carbon resistor	.16
R10	3CR-281	45 ohm, ½ watt wire-wound resistor	.16
R11	4ZR-325	175 ohm, 1 watt metallized resistor	.16
R12	3RR-275	10 megohm, ½ watt carbon resistor	.16
R14	3XR-277	500,000 ohm volume control, with line switch	1.00
R15	3VR-272	60,000 ohm, ½ watt carbon resistor	.16
C1, C2	4ZC-378	Two-gang variable condenser	3.35
†C3, C4, C5		Trimmer, part of antenna coil.	
†C6, C7		Trimmer, part of oscillator coil.	
C8	2NC-231	Adjustable padding condenser, 300-600 mmf	.50
C9	3EC-267	.0042 mf mica condenser	.40
C10, C12	AAC-106A	.00005 mf mica condenser	.20
C11, C22, C32	KC-58	.01 mf, 400 volt tubular condenser	.20
C14	3RC-373	.0004 mf, 600 volt tubular condenser	.20
†C15, C16		Trimmer, part of first i.f. transformer.	
†C17, C18		Trimmer, part of second i.f. transformer.	
C19	BC-12	.05 mf, 200 volt tubular condenser	.20
C20, C21	5AC-384	.0002 mf, 600 volt tubular condenser	.20
C23	LC-65	.02 mf, 400 volt tubular condenser	.20
C24	AC-6	.1 mf, 200 volt tubular condenser	.20
C25	BC-13	.25 mf, 200 volt tubular condenser	.20
C26	EEC-132	.1 mf, 400 volt tubular condenser	.20
C27	3XC-331	.015 mf, 400 volt tubular condenser	.20
C28	EC-23	.03 mf, 400 volt tubular condenser	.20
C29	3LC-297A	.01 mf, 400 volt molded condenser	.20
C30	4ZC-379	16 mf, 375 volt wet electrolytic condenser	.95
C31	4ZC-380	16 mf, 285 volt wet electrolytic condenser	.80
	4ZS-317	Tone control switch	.80
	4RS-306	6½" dynamic speaker	5.70
	4BL-94	Pilot light, 6.3 volt, .25 amp., Mazda No. 44	.20
	4VS-315A	Wave-band switch	1.40
	4XZ-722	Conical escutcheon with crystal	1.90
	4YZ-772	Drive cord	.02
	4YZ-773	Drive cord springs	.05
	4YZ-754A	Drive shaft and pulley	.20

MIRACLE TUNING UNIT PARTS

T1	4YT-424	Antenna coil	$ .30
T2	4VT-412	Oscillator coil	.65
C1	AC-7A	.00025 mf mica condenser	.20
C2	4ZC-383A	.00018 mf mica condenser	.20
C3	4ZC-382A	.00012 mf mica condenser	.20
C4	4ZC-381A	.000075 mf mica condenser	.20
C5	AAC-106A	.00005 mf mica condenser	.20
C6	NNC-199	.001 mf, 600 volt tubular condenser	.20
‡C8, C9, C10, C11, C12, C13	4VC-368	Dual trimming condenser	.40
R1	TTR-201	3000 ohm, ¼ watt carbon resistor	.16
	4VS-309	6 gang push-button selector switch	2.55
	4VZ-721	6 wire cable with octal plug assembly	1.75
	4VZ-732	Push-button	.05
	4VZ-763	Celluloid push-button cap	.01
	4VZ-713	Trimmer button	.05
	4VZ-725	Station name-tab cards (complete set)	.45

When ordering replacement parts specify part numbers.

PRODUCTION CHANGES

A 3 ohm ½ watt wire-wound resistor, part no. 4ZR-326, is located in series with the dial light.

*Item number locates the article on the schematic diagram.
†These trimmer condensers are part of the coil assemblies and cannot be supplied separately.
‡These trimmers are supplied in pairs.

ADJUSTMENTS

An oscillator with frequencies of 456, 600, 1400 and 15,000 kc should be used.

In addition an output meter should be used across the voice coil or output transformer for observing maximum response.

The set's oscillator is higher in frequency than the signal, so images should be observed on the low frequency side of the signals.

Always choose the minimum capacity peak on oscillator trimmers and maximum capacity peaks on antenna trimmers. The last motion in adjusting trimmers should always be a tightening one, not a loosening one.

Always use as weak a test signal as possible during alignment.

Never leave a trimmer with the outside plate so loose that there is no tension on the screw. Either bend the plate up or remove the screw entirely.

Location of Coils and Trimmer Adjustments

The broadcast antenna coil, short-wave antenna coil and 456 kc adjustable wave-trap are on one assembly mounted on a bracket on the top of the chassis, to the right of the 6A7 tube. The trimmers for these coils are accessible through holes in the coil bracket. The hole closest to top is for the trap. The central hole is for the broadcast antenna coil and bottom hole for short-wave antenna coil.

The broadcast and short-wave oscillator coils are mounted on the inside of the right-hand chassis wall. The trimmers are accessible through holes in the chassis wall. The front trimmer is for short-wave oscillator and the rear trimmer is for the broadcast oscillator.

The two i-f transformers are in oblong cans located on the top of the chassis. The first i.f. is the one behind the antenna coil. The trimmers for these transformers are accessible through holes in the tops of the cans.

The broadcast series padding condenser is located on the right-hand side of the chassis with its adjusting screw accessible through a hole in the chassis wall.

I-f and Wave-trap Alignment

Turn the switch to the broadcast position (central) and rotate the variable condenser to the minimum capacity position. Feed 456 kc through a .02 mf condenser, to the grid cap of the 6A7 tube and adjust the four i-f trimmers for maximum response. Feed 456 kc to the antenna through a .0002 and adjust the wave-trap trimmer (rear screw beside variable condenser) for *minimum response.*

Short-Wave Alignment

Since the indicator is fastened to the cabinet, a wire should be fastened to the variable condenser and bent over to form a dial pointer when the chassis is removed from the cabinet.

Use a dummy antenna (400 ohm resistor) when aligning the short-wave coils.

Rotate the wave-band switch counter-clockwise to the short-wave position and set the dial pointer to 15 megacycles. Feed 15 megacycles through the dummy antenna and adjust the short-wave oscillator trimmer for maximum response and then adjust the short-wave trimmer for maximum response. The variable condenser should be rocked while adjusting the antenna trimmer. (Rotate variable condenser rotor shaft back and forth through a small arc.)

Broadcast Alignment

Rotate the wave-band switch to the broadcast position and set the dial at 60. Feed 600 kc through a standard dummy antenna (a .0002 mf condenser may be used as a substitute).

Adjust the broadcast series padding condenser for maximum response. Rotate the dial to 140, feed 1400 kc and adjust the broadcast oscillator trimmer for maximum response and then adjust the broadcast antenna trimmer for maximum response. Return the dial to 60, feed 600 kc and readjust the series padding condenser, rocking the variable condenser for maximum response.

GENERAL NOTES

1. The receiver should never be turned on with either the speaker plug or the 6AC5G tube out of its respective socket, since the rapid rise in rectifier voltage will damage the electrolytic condenser.
2. When replacing the chassis in the cabinet take precautions to keep any part of the dial and condenser assembly from touching the cabinet, otherwise microphonism will result.
3. The color coding of the i-f transformers is as follows:
   Grid—green — Grid return—black
   B plus—red — Plate—blue.
4. The color coding of the power transformer is as follows:
   Primary—two black leads
   High-voltage secondary—two red leads
   High-voltage secondary center tap—red and yellow lead
   6.3 volt secondary—two green leads
   5 volt secondary—two yellow leads.
5. The adjustable padding condenser for the broadcast band is mounted on the front of the chassis near the tuning control, with the screw adjustment accessible through a hole in the front of the chassis. The short-wave band has a fixed padder, C9 on the schematic. When replacing this fixed padder be careful to use a condenser which has a capacity within 2% of the specified value, otherwise the short-wave coils may not track.
6. The wave-trap in the receiver has been adjusted for maximum signal rejection at 456 kc. If, however, persistent interference is experienced from some particular telegraph station the wave-trap trimmer may be readjusted until the response from the interfering station is at a minimum.
7. An efficient antenna system is necessary to enable a full realization of the merits of the receiver. For reduction of noise and achievement of high efficiency on all frequency ranges the Emerson All-Wave High Fidelity Antenna, Model W-78, and the Emerson All-Wave Antenna System, Model W-89, are recommended. Instructions for the installation of these antennas are supplied with each kit.
   In congested areas where the installation of a large antenna is not desirable we recommend the use of the Emerson Flexible Mast Antenna, Model W-82. Instructions for the installation of this compact and efficient antenna are supplied with each kit.
8. To change the dial light the chassis should be removed from the cabinet.
9. The receiver is adjusted at the factory so that the entire broadcast frequency range is divided, and so covered, by the six buttons. In rare cases where two or more of the desired stations fall within the frequency range of one button, the internal connections in the automatic unit may be changed so that any of these stations may be selected by the automatic unit. The changes to be made are simple and may be accomplished by following the instructions given in these notes.

MODEL BE 198
Chassis BE
Schematic

EMERSON RADIO & PHONOGRAPH CORP.

I-F PEAKED AT 456 KC

The tube complement is as follows:

1—6A7 pentagrid oscillator-modulator
1—6D6 i-f amplifier
1—6Q7 diode detector, audio amplifier, automatic volume control
1—41 pentode power output
1—80 full-wave rectifier

All octal-base tubes may be replaced with either metal or equivalent octal-base glass tubes.

Voltage rating ..... 105-125 volts, 60 cycles, a.c.
Power consumption ... 45 watts
Frequency range ..... 540 to 1730 kc

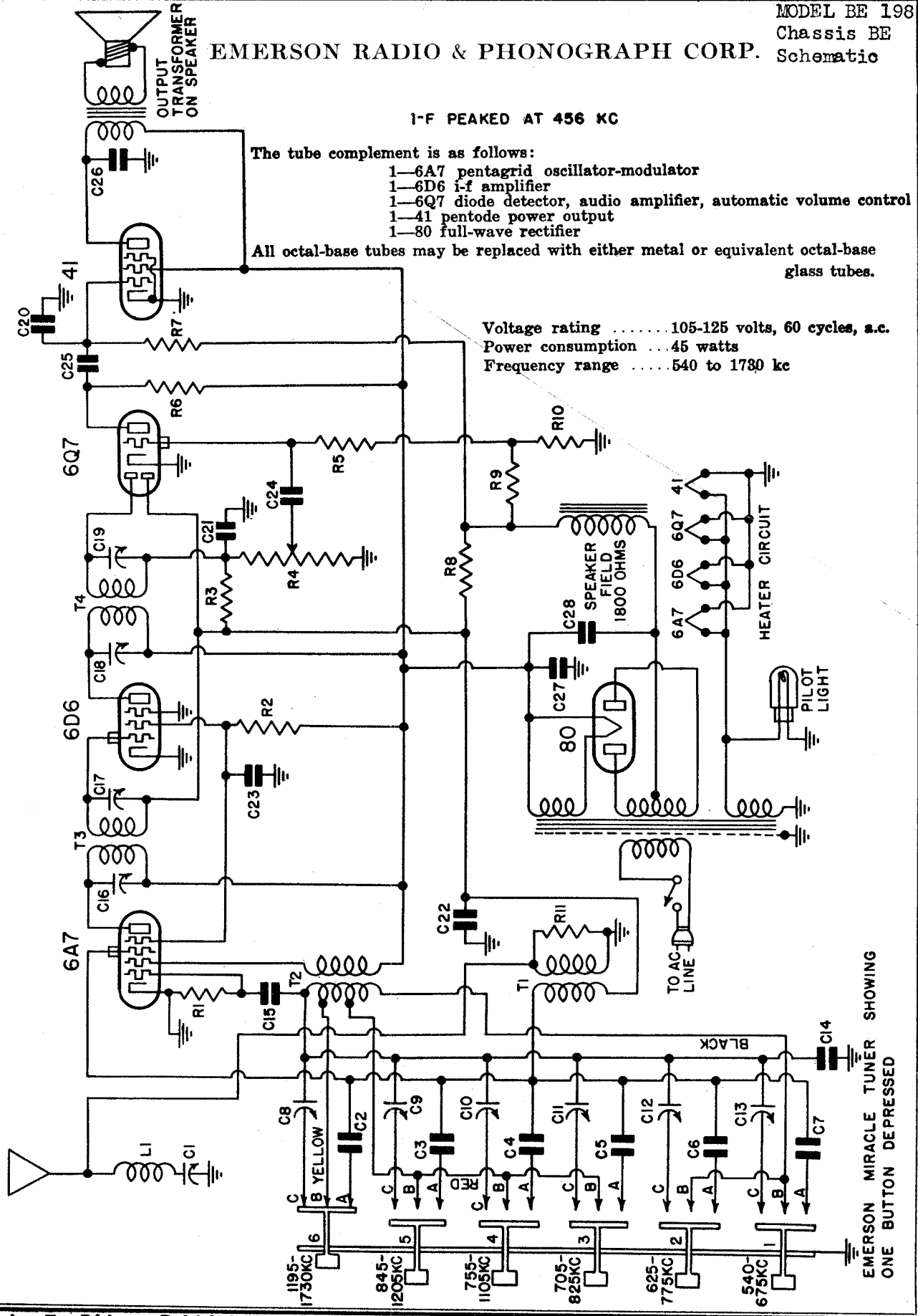

©John F. Rider, Publisher

©John F. Rider, Publisher

REPLACEMENT PARTS

List Price as of March 1st, 1938 (Subject to change without notice)

Item	Part No.	DESCRIPTION	Price
T1	4VT-411	Antenna coil	$ .40
T2	4VT-412	Oscillator coil	.65
T3	3RT-320B	456 kc first i-f transformer	1.10
T4	3RT-321B	456 kc second i-f transformer	1.10
T5	3RT-322A	Power transformer	3.30
L1, C1	4VT-413	Adjustable 456 kc wave-trap	.60
R1	KR-53U	50,000 ohm ¼ watt carbon resistor	.16
R2	3LR-265U	40,000 ohm ½ watt carbon resistor	.16
R3	HR-42U	2 megohm ¼ watt carbon resistor	.16
R4	3FR-256B	500,000 ohm volume control with line switch	1.00
R5	3RR-274U	5 megohm ¼ watt carbon resistor	.16
R6	KR-55	250,000 ohm ¼ watt carbon resistor	.16
R7	KR-56U	500,000 ohm ¼ watt carbon resistor	.16
R8	3RR-275U	10 megohm ¼ watt carbon resistor	.16
R9	4CR-321	290 ohm ½ watt wire-wound resistor	.16
R10	4CR-320	35 ohm ½ watt wire-wound resistor	.16
R11	TTR-201	3,000 ohm ¼ watt carbon resistor	.16
C2	5EC-385A	0.000035 mf mica condenser	.20
C3	4ZC-381A	0.000075 mf mica condenser	.20
C4	EC-24A	0.0001 mf mica condenser	.20
C5	4VC-370A	0.00015 mf mica condenser	.20
C6	NC-70A	0.0002 mf mica condenser	.20
C7	4VC-371A	0.0003 mf mica condenser	.20
†C8, C9, C10, C11, C12, C13	4VC-368	Dual trimmer condenser. Range—each section, 10 to 120 mmf	.40
C14	IIC-133A	0.000025 mf mica condenser	.20
C15	AAC-106A	0.00005 mf mica condenser	.20
‡C16, C17		Trimmer, part of first i-f transformer.	
‡C18, C19		Trimmer, part of second i-f transformer.	
C20, C21	3RC-373	0.0004 mf, 600 volt tubular condenser	.20
C22, C23	BC-12	0.05 mf, 200 volt tubular condenser	.20
C24, C26	HC-34	0.006 mf, 600 volt tubular condenser	.20
C25	KC-58	0.01 mf, 400 volt tubular condenser	.20
C27, C28	3RC-318A	Dual 5 mf, 300 volt dry electrolytic condenser	1.00
	4CS-269A	5½" dynamic speaker	4.75
	4BL-94	Pilot light, 6.3 volt, .25 amp., Mazda No. 44	.20
	4VS-309	6 gang push-button selector switch	2.55
	4VZ-732	Push-buttons	.05
	4VZ-763	Celluloid push-button caps	.01
	4VZ-713	Trimmer buttons	.05
	4VZ-725	Station name-tabs (complete set)	.45

* Item number locates the article on the schematic diagram.

† These trimmers are mounted in pairs.

‡ These trimmers are part of coil assemblies and cannot be supplied separately.

VOLTAGE ANALYSIS

Readings should be taken with a 1000 ohms-per-volt meter. Voltages listed below are from point indicated to ground (chassis) with the volume control turned on full and no signal. Line voltage for all readings was 117.5 volts, 60 cycles, a.c. All readings, except B plus at rectifier and heaters, were taken on 250 volt scale.

Tube	*Plate*	*Screen*	*Cathode*	*Osc. Plate*	*Fil.*
6A7	182	70	0	182	6.3 a.c.
6D6	182	70	0	—	6.3 a.c.
6Q7	87	—	0	—	6.3 a.c.
41	165	182	0	—	6.3 a.c.

Voltage across speaker field—70.
Voltage from B minus to chassis—80.
B plus at 80 tube filament—262.

ADJUSTMENTS

An oscillator with frequency of 456 kc is required.

An output meter should be used across the voice coil or output transformer for observing maximum response.

Always use as weak a test signal as possible when aligning the receiver.

Location of Coils and Trimmer Adjustments

The two i-f transformers are located on top of the chassis deck. The first i-f transformer is the one directly behind the push-button switch. The trimmers for the two i-f transformers are available through holes in the tops of the cans.

The antenna coil is located above the chassis, in front of the 6A7 tube.

The oscillator coil is located under the chassis, behind the volume control.

The 456 kc wave-trap is mounted on the front chassis wall beneath the push-button switch. The trimmer for the 456 kc wave-trap is mounted on the coil and is accessible from the bottom of the chassis.

I-f and Wave-Trap Alignment

Push the button at the extreme right and feed 456 kc through a .02 mf condenser to the grid cap of the 6A7 tube (do not remove the grid clip from the tube). Adjust the four i-f trimmers for maximum response. Feed 456 kc to the antenna through a standard dummy antenna (a .0002 mf condenser may be used as a substitute) and adjust the wave-trap trimmer for minimum response. (See General Note No. 1.)

Repairs to this receiver should be made only by a qualified radio serviceman.

Should this receiver require servicing at any time insist that the dealer or servicemen supply genuine Emerson parts. If parts or servicing notes are not available at dealers, write directly to manufacturer.

In all correspondence concerning this receiver be sure to mention the complete serial number, which will be found at the rear of the chassis.

GENERAL NOTES

1. The wave-trap in the receiver has been adjusted for maximum signal rejection at 456 kc. If, however, persistent interference is experienced from some particular telegraphic station, readjust the wave-trap trimmer until the response from the interfering station is at a minimum.
2. The receiver should never be turned on with the 41 tube out of its socket since the rapid rise in rectifier voltage would damage the electrolytic condensers.
3. The two i-f transformers are held to the chassis by snap-on fasteners. To remove an i-f, unsolder all its leads under the chassis, pinch together the prongs of the snap-on fastener and lift the i-f can from the chassis.
4. The color coding of the leads of the i-f transformers is as follows:
   Grid—green — Plate—blue
   Grid return—black — B plus—red
5. The color coding of the power transformer leads is as follows:
   Primary—two black leads — 6.3 v. sec.—two heavy green leads
   High voltage sec.—two red leads — 5 v. sec.—two heavy yellow leads
   High voltage sec. center tap—red and yellow lead
6. With a few exceptions, the color coding of the general wiring is as follows:
   Plate—blue — A.v.c. and cathode—white or yellow
   B plus—red — Grid—green
   Screen—brown — Filament and ground—black
7. The receiver is adjusted at the factory so that the entire broadcast frequency range is divided, and so covered, by the six buttons. In rare cases where two or more of the desired stations fall within the frequency range of one button, the internal connections in the automatic unit may be changed so that any of these stations may be selected by the automatic unit. The changes to be made are simple and may be made by following the instructions given in these notes.

©John F. Rider, Publisher

ADJUSTMENTS OF MIRACLE TUNING ASSEMBLY

Pre-adjustment of Station Buttons

The six push-buttons provide a choice of six favorite stations for Miracle Tuning. Adjustments for any particular station must be made by means of the small cross-slotted button below the chosen push-button. The following procedure must be carefully observed in making these adjustments.

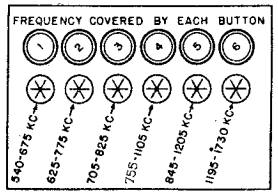

Fig. 1

NOTE: The above illustration will also be found on a label on the bottom of the cabinet.

1. Select six nearby broadcast stations desired for Miracle Tuning and determine their frequencies. Stations are usually listed in newspapers with their frequencies in kilocycles.
2. The frequency range covered by each button is shown in the Fig. 1 at the left. Of the chosen stations select the one with the lowest frequency. The button with a frequency range which includes this station frequency is the one to be adjusted for that particular station.

   For example, a desired station has a frequency of 600 kilocycles. Button No. 1 covers a range of 540 to 675 kilocycles. This button, therefore, is the one to be used for that station.

   Where a station has a frequency which falls within the ranges of two buttons use the button with the lower frequency range, except when this lower button has already been reserved for another station.
3. Locate the station call letters on one of the four cards supplied in an envelope with the receiver. Push out the circular tab bearing the station call letters from the card. Remove the clear celluloid disc from the chosen push-button by prying with a small sharp instrument at the notch on the side of the button. Remove the printed tab from the button and replace it with the proper tab. Replace the celluloid disc over this tab and press it in firmly.
4. Insert the line plug into the electrical outlet and turn the receiver on. Wait at least 15 minutes for the internal parts of the receiver to attain a uniform operating temperature before making any adjustments.

   Press in the push-button to be used for the desired station. Be sure this button is pushed all the way in until a click is heard and the button remains depressed. The cross-slotted button which is below the selected push-button is the one to be adjusted, see Fig. 2. Insert a small thin coin in one of the slots in the button and rotate it slowly in either direction until the desired station is heard.

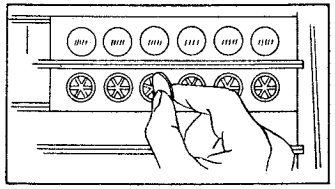

Fig. 2
Adjusting the button with a coin.

   Once the station is heard, rotate the adjusting button back and forth through a very small arc until the station is received at maximum volume and the reception is clear and undistorted. Check to be sure that you have adjusted the button for the proper station by listening for the station announcement.
5. Select the desired station of the next highest frequency and adjust the proper button, carefully observing the procedure outlined above. In similar fashion adjust for the remaining stations chosen.
6. Once the six buttons have been adjusted it is necessary that they be rechecked. Starting with the first button repeat the entire adjusting procedure, being very careful to adjust the buttons to the middle of the stations. When rotating the adjusting button, do not exert any undue pressure on it, since this may disturb the final adjustment.

The receiver is adjusted at the factory so that the entire broadcast frequency range is divided, and so covered, by the six buttons. In rare cases where two or more of the desired stations fall within the frequency range of one button, the internal connections in the automatic unit may be changed so that any of these stations may be selected by the automatic unit. The changes to be made are simple, but, nevertheless, should be done by a competent serviceman.

Operation

Turn the receiver on by rotating the volume control knob clockwise until the switch is heard to click and then rotate this knob in the same direction to about half of its full rotation. Tune in the desired station by merely pushing in the button bearing the call letters of that station. Be sure that the button is pushed all the way in until a click is heard and the button remains depressed. Adjust the volume to the desired level.

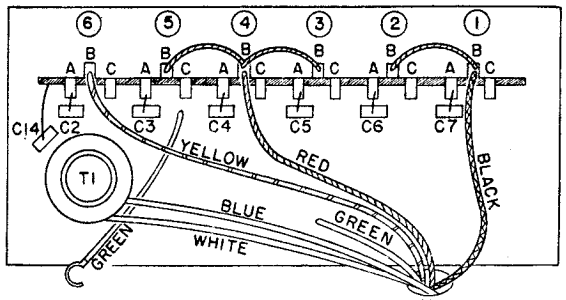

Fig. 3. *Rear View of Push-Button Assembly.*

The Switching Assembly

Remove the chassis from the cabinet and loosen the switch assembly from the chassis by removing the two screws which pass through slots in the front plate. Do not unsolder any of the leads coming from the switch assembly. Merely tilt the assembly forward so that all of its parts are accessible. Behind each button are switch lugs arranged in groups of three, as in the diagram. Lugs lettered B for each button are connected to one of the oscillator coil taps, which have the following frequency ranges:

Black covered wire: 540-775 kc.
Red covered wire: 705-1205 kc.
Yellow covered wire: 1195-1730 kc.

Lugs lettered A on each button are connected to fixed condensers (C2, C3, C4, C5, C6, C7), which tune the antennna coils properly in each of the following bands:

Button no. 1.	540-675 kc	Button no. 4.	755-1105 kc
Button no. 2.	625-775 kc	Button no. 5.	845-1205 kc
Button no. 3.	705-825 kc	Button no. 6.	1195-1730 kc

Lugs lettered C are connected to adjustable trimming condensers (C8, C9, C10, C11, C12, C13), which tune the oscillator. These trimmers are all of the same capacity range.

Change of Connections

If the button covering a certain frequency band is already in use and it is desired to tune in another station in that same band, the range of any other button may be changed to accommodate that station by observing the following procedure:

1. Place the switch in a position which corresponds to Fig. 3 above. Unsolder the molded mica condenser (C2 or C3 or C4 or C5 or C6 or C7) from lug A of the button to be changed and, with a short piece of wire reconnect this lug A to lug A of a button which covers the desired range and is already in use. DO NOT DISCONNECT THE MOLDED MICA CONDENSER WHICH IS ATTACHED TO THE BUTTON IN USE. To allow for future changes, tape up the end of the disconnected molded condenser.

If lug B of the button to be changed is already connected to the colored coil lead which includes the desired frequency, no further operation is necessary. However, if lug B is not connected to an oscillator tap of the desired frequency range then remove any wires from lug B and reconnect this lug to any other lug B which already is connected to the coil lead of the correct color (frequency band). Refasten the assembly on the chassis and tune in the new station. Remount the chassis in the cabinet, insert proper station name-tabs and retune all stations.

Examples

Button 4 is in use and it is desired to shift button 5 to tune in a station at 830 kc.

1. Unsolder C3 (75 mmf) mica condenser from lug 5A. (Tape end.)
2. Connect lug 5A to lug 4A. (Button 4 covers the desired frequency.)
3. Since lug 5B is already connected to lug 4B, the operation has been completed. Retune the new station.

Button 2 is in use and it is desired to shift button 3 to tune in station at 700 kc.

1. Unsolder C5 (150 mmf) mica condenser from lug 3A. (Tape end.)
2. Connect lug 3A to lug 2A. (Button 2 covers the desired frequency.)
3. Disconnect the wire joining lug 3B to lug 4B and reconnect to lug 2B. Retune the new station.

EMERSON RADIO & PHONOGRAPH CORP.

A.C.-D.C. T.R.F. Receiver

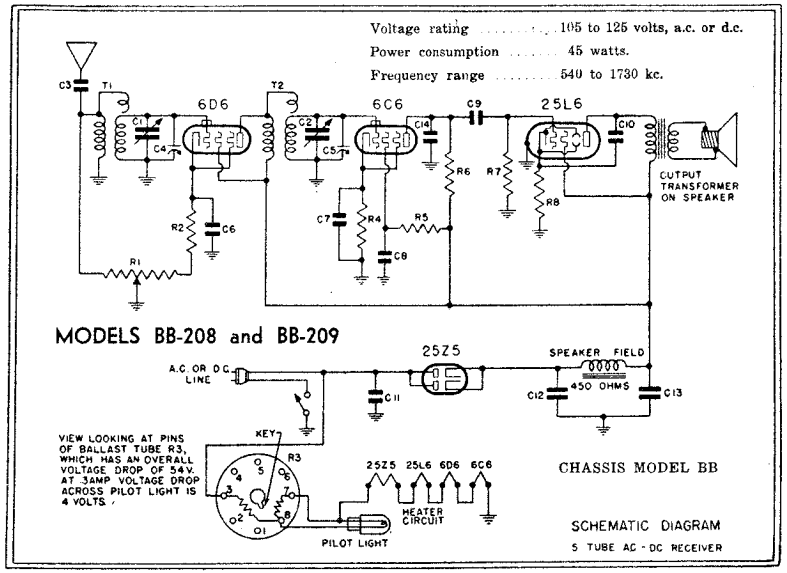

Note: Octal-base tubes may be replaced with either metal tubes or equivalent octal-base glass tubes.

*Item	Part No.	DESCRIPTION	PRICE
T1	5NT-437	Antenna coil	$ .50
T2	5NT-438	Detector coil	.50
R1	2VR-219F	Volume control with line switch—75,000 ohms	.90
R2	3CR-294	240 ohm ½ watt wire-wound resistor	.16
R3	L-55BG	Plug-in ballast tube. (Interchangeable with L-55B)	.55
R4	OR-73U	25,000 ohm ¼ watt carbon resistor	.16
R5	HR-42U	2 megohm ¼ watt carbon resistor	.16
R6, R7	KR-56U	.5 megohm ¼ watt carbon resistor	.16
R8	3QR-297	110 ohm ½ watt wire-wound resistor	.16
C1, C2	5BC-398	Two-gang variable condenser	2.35
C3	NNC-199	0.001 mf, 600 volt tubular condenser	.20
†C4, C5		Trimmers, part of variable condenser.	
C6, C8	AC-6	0.1 mf, 200 volt tubular condenser	.20
C7	5AC-388	0.25 mf, 100 volt tubular condenser	.20
C9, C10	LC-65	0.02 mf, 400 volt tubular condenser	.20
C11	EEC-132	0.1 mf, 400 volt tubular condenser	.20
‡C12, C13	4DC-345A	Dual 16 mf, 100 volt dry electrolytic condenser	1.20
C14	5AC-384	0.0002 mf, 600 volt tubular or mica condenser	.20
	5BS-333	5" dynamic speaker	3.90
	4BL-94	Pilot light, 6.3 volt, .25 amp, Mazda No. 44	.20
	5BM-372	Four-button mechanical tuning unit (complete with variable condenser)	6.15
	5BD-50A	Dial face	.15
	4MZ-588A	Dial pointer	.20
	3CZ-350B	Escutcheon with crystal (for 209 cabinet)	1.25
	5BZ-835	Push-buttons	.05
	4YZ-772	Drive cord	.02
	5JZ-824	Drive cord spring	.05
	4VZ-763B	Celluloid push-button caps (set of 4)	.05
	4VZ-725	Station name-tab cards (per set)	.65

1—6D6, r-f amplifier.
1—6C6, biased detector.
1—25L6G, beam power output.
1—25Z5, dual half-wave rectifier.
1—L-55BG, ballast tube.

WHEN ORDERING REPLACEMENT PARTS SPECIFY PART NUMBERS

List Price Ea. Effective as of July 1st, 1938 (Subject to change without notice)

*Item number locates the article on schematic diagram.

†These condensers cannot be supplied separately.

‡Note: In replacing the dual 16 mf electrolytic condenser, part no. 4DC-345A, the green lead should be connected to the 25Z5 cathode.

PREADJUSTMENT OF STATION BUTTONS

Insert the line plug in the electric outlet. Turn the receiver on by rotating the volume control knob clockwise until the switch is heard to click and then rotate this knob in the same direction to about half of its full rotation. Wait about a minute for the tubes to warm up. If the power supply is d.c. and the receiver does not operate at first, reverse the line plug to obtain the proper polarity.

Select four nearby stations desired for automatic tuning. Choose one of these stations and the button to be adjusted for it. Follow the procedure outlined below.

1. Loosen the push-button to be adjusted by rotating it counter-clockwise from ¼ to ½ turn. See Fig. 2.

2. Push the button in as far as it will go and, holding it in firmly, tune in the desired station by means of the selector knob. See Fig. 3.

3. Hold button in with finger of one hand and tighten securely with the other hand. Release the button and tighten it further if possible. See Fig. 4.

4. Remove the celluloid cap and blank station tab from the button by prying at the small notch in the side of the button with a pointed instrument. Remove the tab bearing the station call letters from one of the cards supplied in a separate envelope with the receiver. Insert the tab in the button and replace the celluloid cap over this tab, pressing it in firmly.

Check the adjustment of the button by detuning the station by means of the selector knob and then pressing the push-button in as far as it will go. The station should be received clearly and with maximum volume.

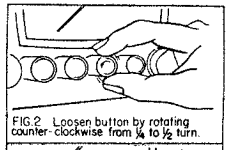
FIG.2 Loosen button by rotating counter-clockwise from ¼ to ½ turn.

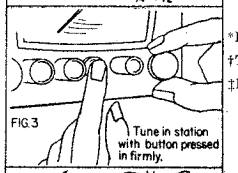

FIG.3

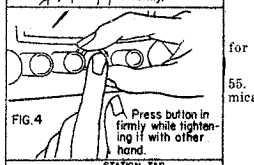

FIG.4

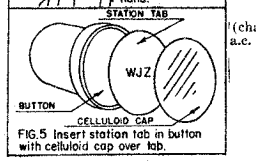

FIG.5 Insert station tab in button with celluloid cap over tab.

ALIGNMENT PROCEDURE

An oscillator with a frequency of 1400 kc is required.

Use as weak a test signal as possible. An output meter should be used across the voice coil or output transformer for observing maximum response.

Rotate variable condenser to the maximum capacity position and set the pointer at the next calibration mark beyond 55. Then rotate the variable condenser until the pointer is at 140 and feed 1400 kc to the antenna through a .0001 mf mica condenser and adjust both trimmer condensers on the variable condenser for maximum response.

VOLTAGE ANALYSIS

Readings should be taken with a 1000 ohms-per-volt meter. Voltages listed below are from point indicated to ground (chassis) with volume control turned on full and no signal. The line voltage for these readings was 117.5 volts, 60 cycles, a.c. All readings except heaters and cathodes were taken on 250 volt scale.

Tubes	*Plate*	*Screen*	*Cathode*	*Fil.*
6D6	100	100	2.8	6.3
6C6	20	15	2.1	6.3
25L6G	93	100	6.0	25.0

Voltage across speaker field—26 volts.
25Z5 cathode to ground—126 volts.

BB-S1

©John F. Rider, Publisher

EMERSON RADIO & PHONOGRAPH CORP.

Voltage rating ..... 105 to 125 volts, a.c. or d.c.
Power consumption ..... 43 watts.
Frequency ranges ..... 540 to 1580 kc and 1580 to 4200 kc.

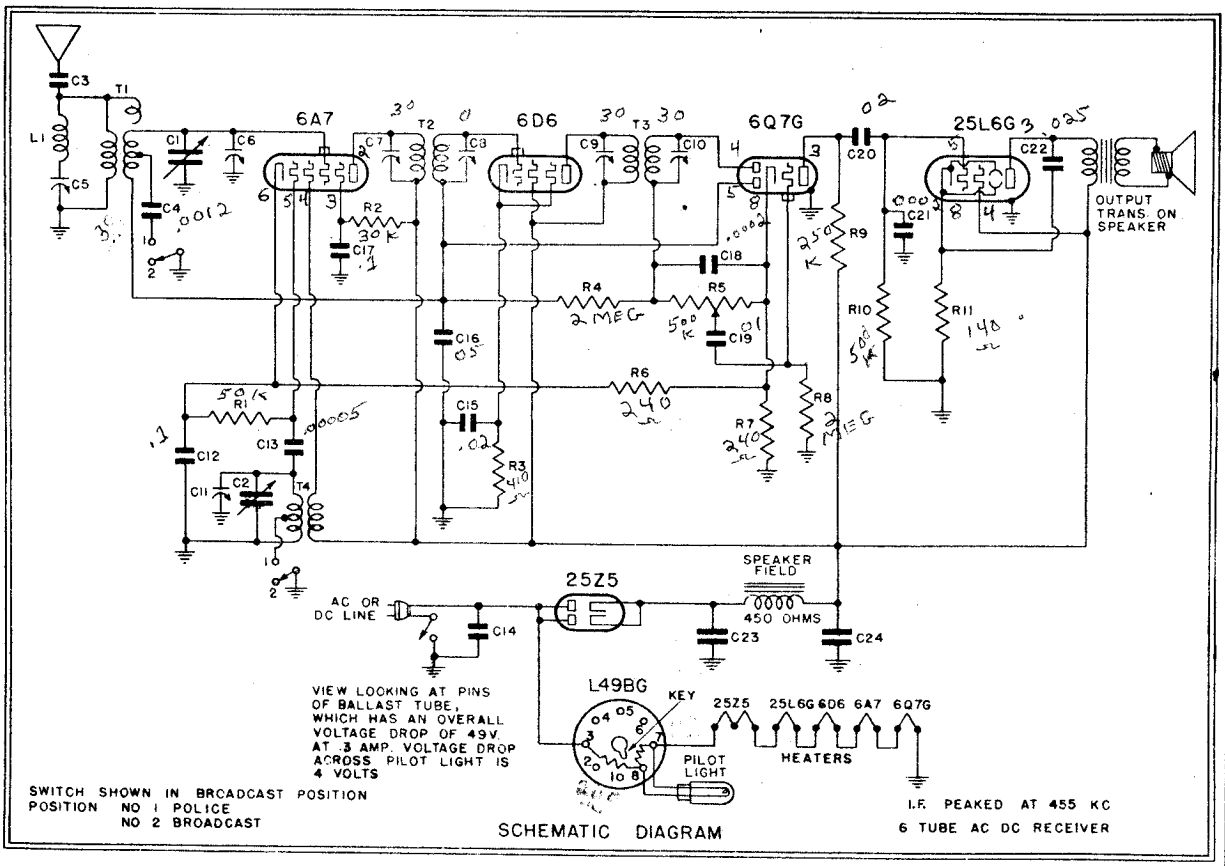

SCHEMATIC DIAGRAM

CHASSIS MODEL BJ

Readings should be taken with a 1000 ohms-per-volt meter. Voltages listed below are from point indicated to ground (chassis) with the volume control turned on full and no signal. Line voltage for these readings was 117.5 volts, 60 cycles, a.c. All readings except cathodes and heaters were taken on 250 volt scale.

VOLTAGE ANALYSIS

Tube	Plate	Screen	Cathode	Osc. Plate	Fil.
6A7	100	50	2.3	100	6.3
6D6	100	100	3.5	—	6.3
6Q7G	48	—	1.2	—	6.3
25L6G	92	100	6.5	—	25.0

Voltage at 25Z5 cathode—130 volts.
Voltage across speaker field—28 volts.
Voltage drop across ballast tube (pins Nos. 3, 7)—49 volts.
Voltage drop across pilot light section of ballast tube (pins Nos. 8 and 7)—4 volts.

GENERAL NOTES

1. If replacements are made or the wiring disturbed in the r-f portion of the circuit, the receiver should be carefully re-aligned.
2. One side of the power line is directly grounded to the chassis base. Under no circumstances, therefore, should a ground wire be permitted to come in contact with any metal part of the receiver.
3. The filament dropping resistor (L-49BG on schematic) is in a special tube at the rear of the chassis. This tube will become quite hot under normal operating conditions. For voltage drop specifications, see below.
4. When operating the receiver on d.c. it may be necessary to reverse the line plug to obtain the correct polarity.
5. The two i-f transformers are held to the chassis by snap-on fasteners. To remove an i-f, unsolder all its leads under the chassis, pinch together the prongs of the snap-on fastener and lift the i-f can from the chassis.
6. The color coding of the i-f transformer leads is as follows:
   Grid—green
   Grid return—black
   Plate—blue
   B plus—red
7. The receiver is shipped with an attached antenna wire. In some locations near powerful local stations the addition of a very large antenna may be detrimental to reception because of the resulting interference. The Emerson Flexible Mast Antenna, Model W-82, has been especially designed for Emerson receivers, featuring compactness and portability while at the same time retaining a high efficiency from the standpoint of performance. Since it functions as an outside antenna the Flexible Mast will substantially improve the receiver performance. Where the Flexible Mast is installed permanently, it is urgently recommended that the receiver antenna wire be cut. Leave just enough of this wire to reach from the receiver to the window strip connector. Instructions for the installation of this compact and efficient outside antenna are supplied with each kit.
8. The wave-trap has been adjusted for maximum signal rejection at 455 kc. If, however, persistent interference is experienced from some particular telegraphic station, readjust the wave-trap trimmer until the response from the interfering station is at a minimum.

MODELS BJ-200, BJ-210, and BJ-214

©John F. Rider, Publisher

MODELS BJ200,BJ210,BJ214
Alignment,Parts

EMERSON RADIO & PHONOGRAPH CORP.

REPLACEMENT PARTS LIST

List Price ea. Effective as of June 1st, 1938 (Subject to change without notice)

*Item	Part No.	DESCRIPTION	PRICE
T1	3RT-384A	Two-band antenna coil	$ .85
T2	3RT-320B	455 kc first i-f transformer	1.10
T3	3RT-321B	455 kc second i-f transformer	1.10
T4	3RT-319A	Two-band oscillator coil	.60
L1	4DT-343	455 kc adjustable wave-trap	.40
R1	KR-53	50,000 ohm ¼ watt carbon resistor	.16
R2	2CR-193	30,000 ohm ½ watt carbon resistor	.16
R3	3CR-295	410 ohm ½ watt wire-wound resistor	.16
R4, R8	HR-42	2 megohm ¼ watt carbon resistor	.16
R5	3FR-256B	Volume control with line switch—500,000 ohms	1.00
R6, R7	3CR-294	240 ohm ½ watt wire-wound resistor	.16
R9	KR-55	250,000 ohm ¼ watt carbon resistor	.16
R10	KR-56	500,000 ohm ¼ watt carbon resistor	.16
R11	3FR-293	140 ohm ½ watt wire-wound resistor	.16
——	L-49BG	Plug-in type ballast resistor. Interchangeable with L-49B	.55
C1, C2	5JC-397	Two-gang variable condenser	2.45
C3	3HC-274	0.002 mf, 600 volt tubular condenser	.20
C4	4DC-367	0.0012 mf mica condenser	.30
†C5	——	Trimmer, part of wave-trap assembly.	
‡C6, C11	——	Trimmer, part of variable condenser.	
†C7, C8	——	Trimmer part of first i-f transformer assembly.	
†C9, C10	——	Trimmer, part of second i-f transformer assembly.	
C12, C17	AC-6	0.1 mf, 200 volt tubular condenser	.20
C13	AAC-106A	0.00005 mf mica condenser	.20
C14	2VC-242A	0.1 mf, 400 volt molded condenser	.20
C15	FC-29	0.02 mf, 200 volt tubular condenser	.20
C16	BC-12	0.05 mf, 200 volt tubular condenser	.20
C18, C21	5AC-384	0.0002 mf, 600 volt tubular or mica condenser	.20
C19	KC-58	0.01 mf, 400 volt tubular condenser	.20
C20	LC-65	0.02 mf, 400 volt tubular condenser	.20
C22	3FC-336	0.025 mf, 400 volt tubular condenser	.20
C23, C24	3CC-261	20 mf, 150 volt wet electrolytic condenser	.80
	3RS-231A	Wave-band switch	.35
	3FS-251A	5½" dynamic speaker	5.00
	5JZ-821	Dial face	.70
	4BL-94	Pilot light, 6.3 volt, .25 amp., Mazda No. 44	.20
	5JZ-822	Dial drive shaft and pulley	.05
	4MZ-588A	Dial pointer	.20
	4XM-367	Drive pulley	.10
	5JZ-824	Drive cord spring	.05
	4YZ-772	Drive cord	.02
	5FZ-758	Pyralin crystal (for BJ-200)	.45
	3CZ-350	Escutcheon with crystal (for BJ-210 and BJ-214)	1.25

*Item number locates the article on the schematic diagram.

†These trimmers are part of coil assemblies and cannot be supplied separately.

‡These trimmers are part of variable condenser and cannot be supplied separately.

Location of Coils and Trimmer Adjustments

The two i-f transformers are located on top of the chassis deck. The first i-f transformer is the one directly behind the variable condenser. The trimmers for the two i-f transformers are available through holes in the tops of the cans.

The trimmers for the antenna and oscillator are located on the variable condenser. The trimmer on the front section is for the antenna.

The 455 kc wave-trap is mounted on the front chassis wall beneath the variable condenser. The trimmer for the 455 kc wave-trap is mounted on the coil and is accessible from the bottom of the chassis.

The tube complement

1—6A7 pentagrid oscillator-modulator.
1—6D6 first i-f amplifier.
1—6Q7G diode detector, a-f amplifier, a.v.c.
1—25L6G beam power output.
1—25Z5 dual half-wave rectifier.
1—L49B or L49BG ballast tube.

Octal-base tubes in this receiver may be replaced with either metal or octal-base glass tubes.

I-f and Wave-Trap Alignment

Rotate the wave-band switch to the broadcast (clockwise) position. Set the variable condenser at the minimum capacity position and feed 455 kc, through a 0.02 mf paper condenser, to the grid cap of the 6A7 tube (do not remove the grid clip from the tube). Adjust the four i-f trimmers for maximum response. Feed 455 kc to the antenna through a standard dummy antenna (a .0002 mf condenser may be used as a substitute) and adjust the wave-trap trimmer for *minimum* response. (See General Note No. 8.)

R-f Alignment

NOTE: The Model BJ-200 should be aligned with the chassis bottom plate in place.

With the wave-band switch in the broadcast position, clockwise, set the dial pointer at 140. Feed 1400 kc through a standard dummy antenna (a .0002 mf condenser may be used as a substitute) to the antenna lead and adjust first the oscillator trimmer (on rear section of variable condenser) then the antenna trimmer (on front section of variable condenser) for maximum response.

The police band is self-tracking and does not require any adjustment.

©John F. Rider, Publisher

EMERSON RADIO & PHONOGRAPH CORP.

Voltage rating ..... 105-125 volts, 60 cycles, a.c.
Power consumption ..... 45 watts.
Frequency ranges ..... 540 to 1580 kc. and 1580 to 4200 kc.

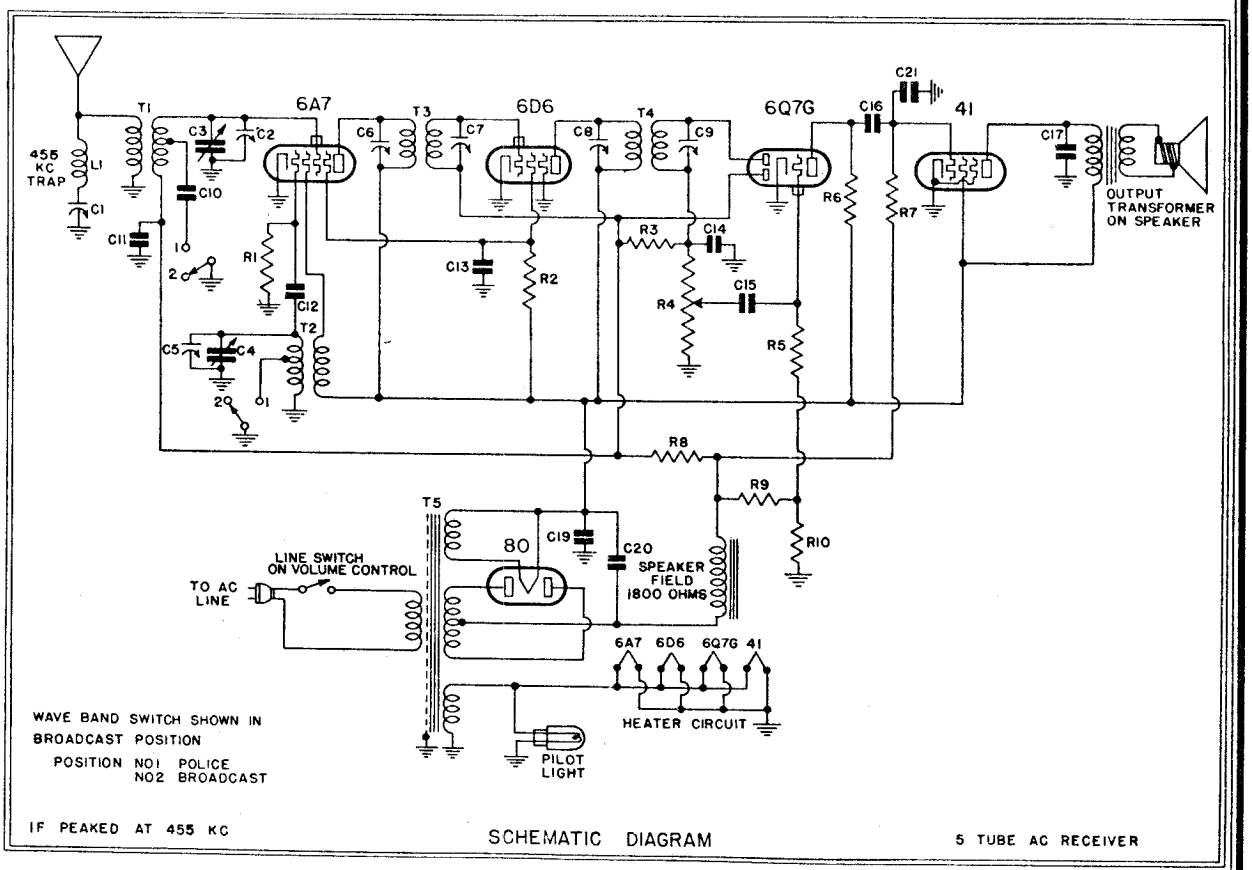

CHASSIS MODEL BL

Readings should be taken with a 1000 ohms-per-volt meter. Voltages listed below are from point indicated to ground (chassis) with the volume control turned on full and no signal. Line voltage for these readings was 117.5 volts, 60 cycles, a.c. All readings except heaters were taken on 250 volt scale.

Tube	*Plate*	*Screen*	*Cathode*	*Osc. Plate*	*Fil.*
6A7	182	70	0	182	6.3 a.c.
6D6	182	70	0	—	6.3 a.c.
6Q7	87	—	0	—	6.3 a.c.
41	165	182	0	—	6.3 a.c.

Voltage across speaker field—70.
Voltage from B minus to chassis—80.
B plus at 80 tube filament—182.

VOLTAGE ANALYSIS

GENERAL NOTES

1. The wave-trap in the receiver has been adjusted for maximum signal rejection at 455 kc. If, however, persistent interference is experienced from some particular telegraphic station, readjust the wave-trap trimmer until the response from the interfering station is at a minimum.

2. The receiver should never be turned on with the 41 tube out of its socket since the rapid rise in rectifier voltage would damage the electrolytic condensers.

3. The two i-f transformers are held to the chassis by snap-on fasteners. To remove an i-f, unsolder all its leads under the chassis, pinch together the prongs of the snap-on fastener and lift the i-f can from the chassis.

4. The color coding of the leads of the i-f transformers, is as follows:
   Grid—green
   Grid return—black
   Plate—blue
   B plus—red

5. The color coding of the power transformer leads is as follows:
   Primary—two black leads
   High voltage sec.—two red leads
   High voltage sec. center tap—red and yellow lead
   6.3 v. sec.—two heavy green leads
   5 v. sec.—two heavy yellow leads

6. With a few exceptions, the color coding of the general wiring is as follows:
   Plate—blue
   B plus—red
   Screen—brown
   A.v.c. and cathode—white or yellow
   Grid—green
   Filament and ground—black

7. An efficient antenna system is necessary to enable a full realization of the merits of the receiver. For reduction of noise and achievement of high efficiency on all frequency ranges the Emerson All-Wave High-Fidelity Antenna, Model W-78, and the Emerson All-Wave Antenna System, Model W-89, are recommended. Instructions for the installation of these antennas are supplied with each kit.

   In congested areas where the installation of a large antenna is not desirable we recommend the use of the Emerson Flexible Mast Antenna, Model W-82. Instructions for the installation of this compact and efficient antenna are supplied with each kit.

MODELS BL-200, BL-210, and BL-214

©John F. Rider, Publisher

MODELS BL200,BL210,BL214
Chassis BL
Alignment,Parts

EMERSON RADIO & PHONOGRAPH CORP.

REPLACEMENT PARTS LIST

List Price ea. Effective as of July 1st, 1938 (Subject to change without notice)

*Item	Part No.	DESCRIPTION	Price
L1	4DT-343	455 kc wave-trap	$ .40
T1	3RT-384A	Two-band antenna coil	.85
T2	3RT-319A	Two-band oscillator coil	.60
T3	3RT-320B	455 kc first i-f transformer	1.10
T4	3RT-321B	455 kc second i-f transformer	1.10
T5	3RT-322A	Power transformer	3.05
R1	KR-53U	50,000 ohm ¼ watt carbon resistor	.16
P2	3LR-265U	40,000 ohm ½ watt carbon resistor	.16
R3	HR-42U	2 megohm ¼ watt carbon resistor	.16
R4	3FR-256B	Volume control with switch—500,000 ohms	1.00
R5	3RR-274U	5 megohm ¼ watt carbon resistor	.16
R6	KR-55	250,000 ohm ¼ watt carbon resistor	.16
R7	KR-56U	500,000 ohm ¼ watt carbon resistor	.16
R8	3RR-275U	10 megohm ¼ watt carbon resistor	.16
R9	4CR-321	290 ohm ½ watt wire-wound resistor	.16
R10	4CR-320	35 ohm ½ watt wire-wound resistor	.16
†C1		Trimmer, part of 455 kc wave-trap assembly.	
‡C2, C5		Trimmer, part of variable condenser.	
C3, C4	5JC-397	Two-gang variable condenser	2.45
†C6, C7		Trimmer, part of first i-f transformer.	
†C8, C9		Trimmer, part of second i-f transformer.	
C10	4DC-367	0.0012 mf mica condenser	.30
C11, C18	BC-12	0.05 mf, 200 volt tubular condenser	.20
C12	4XC-393A	0.00006 mf mica condenser	.20
C14, C21	3RC-373	0.0004 mf, 600 volt tubular or mica condenser	.20
C15, C17	HC-34	0.006 mf, 600 volt tubular condenser	.20
C16	KC-58	0.01 mf, 400 volt tubular condenser	.20
C19, C20	3RC-318A	Dual 5 mf, 300 volt dry electrolytic condenser	1.40
	3RS-231A	Wave-band switch	.35
	4CS-269A	5½" dynamic speaker	4.60
	4BL-94	Pilot light, 6.3 volt, .25 amp., Mazda No. 44	.20
	5LZ-827	Dial face	.70
	4MZ-588A	Dial pointer	.20
	5JZ-822	Drive shaft and pulley for dial assembly	.05
	4YZ-772	Drive cord	.02
	5JZ-824	Drive cord spring	.05
	4XM-367	Drive pulley	.10
	3CZ-350	Escutcheon with crystal (for BL-210 and BL-214)	1.25
	5FZ-758	Pyralin crystal (for BL-200)	.45

WHEN ORDERING REPLACEMENT PARTS SPECIFY PART NUMBER

*Item number locates the article on the schematic diagram.
†These trimmers are part of coil assemblies and cannot be supplied separately.
‡These trimmers are part of variable condenser and cannot be supplied separately.

The tube complement

1—6A7 pentagrid oscillator-modulator
1—6D6 i-f amplifier
1—6Q7G diode detector, audio amplifier, a.v.c.
1—41 pentode power output
1—80 full-wave rectifier

Octal-base tubes may be replaced with either metal or equivalent octal-base glass tubes.

I-f and Wave-Trap Alignment

Rotate the wave-band switch to the broadcast (clockwise) position. Set the variable condenser at the minimum capacity position and feed 455 kc, through a 0.02 mf paper condenser, to the grid cap of the 6A7 tube (do not remove the grid clip from the tube). Adjust the four i-f trimmers for maximum response. Feed 455 kc to the antenna through a standard dummy antenna (a .0002 mf condenser may be used as a substitute) and adjust the wave-trap trimmer for *minimum* response. (See General Note No. 1.)

NOTE: The Model BL-200 should be aligned with the chassis bottom plate in place.

R-f Alignment

With the wave-band switch in the broadcast position, clockwise, set the dial pointer at 140. Feed 1400 kc through a standard dummy antenna (a .0002 mf condenser may be used as a substitute) to the antenna lead and adjust first the oscillator trimmer (on rear section of variable condenser) then the antenna trimmer (on front section of variable condenser) for maximum response.

The police band is self-tracking and does not require any adjustment.

Location of Coils and Trimmer Adjustments

The two i-f transformers are located on top of the chassis deck. The first i-f transformer is the one directly behind the variable condenser. The trimmers for the two i-f transformers are available through holes in the tops of the cans.

The trimmers for the antenna and oscillator are located on the variable condenser. The trimmer on the front section is for the antenna.

The 455 kc wave-trap is mounted on the front chassis wall beneath the variable condenser. The trimmer for the 455 kc wave-trap is mounted on the coil and is accessible from the bottom of the chassis.

MODELS BL-200, BL-210, and BL-214
CHASSIS MODEL BL

©John F. Rider, Publisher

Voltage

MODEL AC 202
Chassis AC
Schematic, Coils

EMERSON RADIO & PHONOGRAPH CORP.

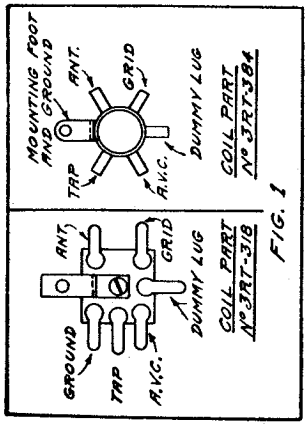

FIG. 1

Note: 3RT-384A lug arrangement is the same as 3RT-384. Bottom View of Coils.

Voltage rating ..... 105-125 volts, 60 cycles, a.c.
Power consumption ..... 45 watts for receiver and 20 watts for motor.
Frequency ranges ..... 540 to 1580 kc. and 1580 to 4200 kc.

Tube Data

1—6A7 pentagrid oscillator-modulator
1—6D6 i-f amplifier
*1—6Q7-G diode detector, audio amplifier, automatic volume control
1—41 pentode power output
1—80 full-wave rectifier

*See production changes on next page.

AC-130, AC-149, AC-168
For Models Without Phono ----------SEE INDEX

Combination Phonograph and Radio

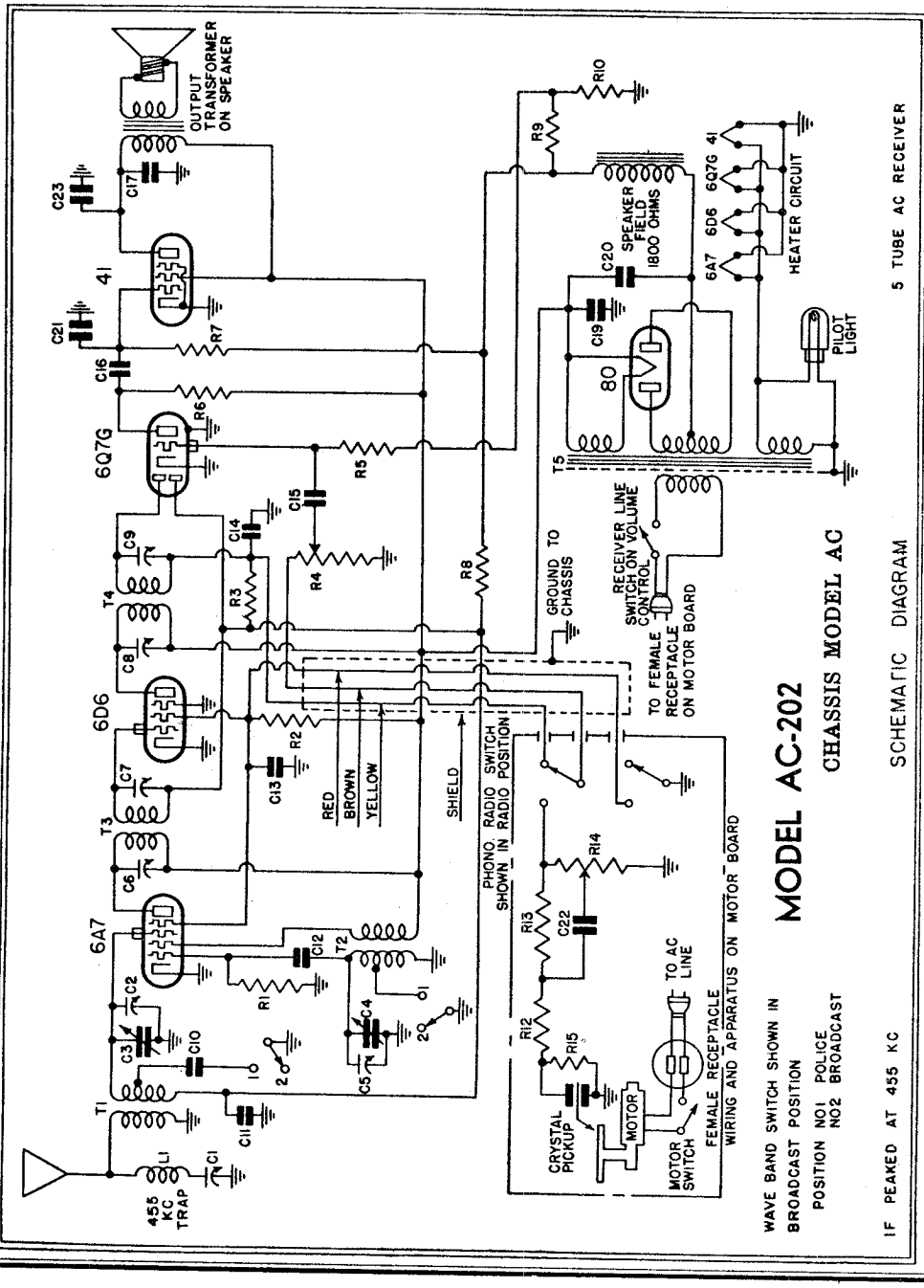

VOLTAGE ANALYSIS

Readings should be taken on the 250 volt scale of a 1000 ohms-per-volt meter. Voltages listed below are from point indicated to ground (chassis) with the volume control turned on full and no signal. Line voltage for these readings was 117.5 volts, 60 cycles, a.c. All voltages except heaters were taken on 250 volt scale.

Tube	*Plate*	*Screen*	*Cathode*	*Osc. Plate*	*Fil.*
6A7	180	60	0	180	6.3
6D6	180	60	0	—	6.3
6Q7-G	70	—	0	—	6.3
41	170	180	0	—	6.3

Voltage across speaker field—70.
Voltage from B minus to chassis—80.
B plus at 80 tube filament—182.

©John F. Rider, Publisher

MODEL AC 202
Chassis AC
Alignment, Changes
Parts, Notes

EMERSON RADIO & PHONOGRAPH CORP.

REPLACEMENT PARTS
MODEL AC-202

CHASSIS MODEL AC

List Price ea. Effective as of July 1st, 1983 (Subject to change without notice)

*Item	Part No.	DESCRIPTION	Price
L1	4DT-343	455 kc wave-trap. (See production change No. 3.)	$ .40
T1	3RT-384A	Two-band antenna coil. (See production change No. 4.)	.85
T2	3RT-319A	Two-band oscillator coil	.60
T3	3RT-320B	455 kc first i-f transformer	1.10
T4	3RT-321B	455 kc second i-f transformer	1.10
T5	3RT-322A	Power transformer. (Formerly part No. 4CT-372.)	3.05
R1	KR-53U	50,000 ohm ¼ watt carbon resistor	.16
R2	3LR-265U	40,000 ohm ½ watt carbon resistor	.16
R3	HR-42U	2 megohm ¼ watt carbon resistor	.16
R4	3FR-256B	Volume control with switch—500,000 ohms	1.00
R5	3RR-274U	5 megohm ¼ watt carbon resistor	.16
R6	KR-55	250,000 ohm ¼ watt carbon resistor	.16
R7	KR-56U	500,000 ohm ¼ watt carbon resistor	.16
R8	3RR-275U	10 megohm ¼ watt carbon resistor	.16
R9	4CR-321	290 ohm ½ watt wire-wound resistor. (See production change No. 2.)	.16
R10	4CR-320	35 ohm ½ watt wire-wound resistor. (See production change No. 2.)	.16
R11	LR-65U	10,000 ohm ¼ watt carbon resistor. (See production change No. 1.)	.16
†C1		Trimmer, part of 455 kc wave-trap assembly.	
‡C2, C5		Trimmer, part of variable condenser.	
C3, C4	4CC-350A	Two-gang variable condenser	2.60
†C6, C7		Trimmer, part of first i-f transformer.	
†C8, C9		Trimmer, part of second i-f transformer.	
C10	4DC-367	0.0012 mf mica condenser. (See production change No. 4.)	.30
C11, C13, C18	BC-12	0.05 mf, 200 volt tubular condenser. (See production change No. 1.)	.20
C12	4XC-393A	0.00006 mf mica condenser	.20
C14, C21	3RC-373	0.0004 mf mica or 600 volt tubular condenser	.20
C15, C17	HC-34	0.006 mf, 600 volt tubular condenser. (See production change No. 1.)	.20
C16	KC-58	0.01 mf, 400 volt tubular condenser	.20
C19, C20	3RC-318A	Dual 5 mf, 300 volt dry electrolytic condenser	1.40
	3RS-231A	Wave-band switch	.35
	4CS-269	5½" dynamic speaker (for Models 130, 149, and 168)	4.55
	4BL-94	Pilot light, 6.3 volt, .25 amp., Mazda No. 44. (See production change No. 5.)	.20
	4LZ-582	Dial face	.75
	3CZ-336	Drive belt for dial assembly	.15
	3CZ-337B	Drive shaft and pulley for dial assembly	.10
	3CZ-339	Idler pulley for dial assembly	.05
	3CZ-340	Idler spring for dial assembly	.03
	3CZ-341	Condenser shaft pulley	.10
	4MZ-588A	Dial pointer	.20
	3FZ-351	Escutcheon with crystal (for Models AC-130 and AC-168)	1.15
	3FZ-398A	Dial crystal (for Model AC-149)	.40
	3FZ-399	Clip for dial crystal (for Model AC-149)	.01

ADDITIONAL PARTS USED IN MODEL AC-202 COMBINATION

R2	2NR-217	40,000 ohm 1 watt carbon resistor	.16
R12	KR-56	500,000 ohm ¼ watt carbon resistor	.16
R13	4LR-313	1.5 megohm ¼ watt carbon resistor	.16
R14	4LR-312A	500,000 ohm tone control with motor line switch	1.05
R15	KR-57	1 megohm ¼ watt carbon resistor	.16
C22	AC-7A	0.00025 mf mica condenser	.20
C23	LC-65	0.02 mf, 400 volt tubular condenser	.20
	3LPM-3	110 volt a.c. phonograph motor	21.35
	3LM-253	Needle cup	.20
	3LM-255	Needle cup cover	.15
	4CS-334	8" dynamic speaker (for Model 202)	6.95
	TTS-111R	Phono-radio switch	.55
	4RZ-733B	Crystal pick-up	11.35

*Item number locates the article on the schematic diagram.

†These trimmers are part of coil assemblies and cannot be supplied separately.

‡These trimmers are part of variable condenser and cannot be supplied separately.

GENERAL NOTES

1. The wave-trap in the receiver has been adjusted for maximum signal rejection at 455 kc. If, however, persistent interference is experienced from some particular telegraphic station, readjust the wave-trap trimmer until the response from the interfering station is at a minimum.
2. The receiver should never be turned on with either the speaker plug or the 41 tube out of their sockets, since the rapid rise in rectifier voltage would damage the electrolytic condensers.
3. The color coding of the leads of the i-f transformers, is as follows:
   Plate—blue
   B plus—red
   Grid—green
   Grid return—black
4. With a few exceptions, the color coding of the general wiring is as follows:
   Plate—blue
   A.v.c. and cathode—white or yellow
   B plus—red
   Grid—green
   Screen—brown
   Filament and ground—black
5. The phonograph motor has been adjusted at the factory to turn at a speed of 78 r.p.m. The speed may be checked by counting the turns per minute or by using a stroboscope disc and a neon light. (The stroboscope method will only work when neon bulb is lighted from a 60 cycle a.c. supply.) To readjust the speed of the motor, part No. 3LPM-3, remove the turn-table and turn the speed adjusting screw (located near the turn-table shaft). A clockwise rotation of the screw decreases the speed. The speed should be checked with the pick-up and record in playing position.
6. The color coding of the power transformer leads is as follows:
   Primary—two black leads
   High voltage sec.—two red leads
   High voltage sec. center tap—yellow and red
   6.3 v. sec.—two heavy green leads
   5 v. sec.—two heavy yellow leads

ADJUSTMENTS

An oscillator with frequencies of 455 and 1400 kc is required.

An output meter should be used across the voice coil or output transformer for observing maximum response.

Always use as weak a test signal as possible when aligning the receiver.

Location of Coils and Trimmer Adjustments

The two i-f transformers are located on top of the chassis deck. The first i-f transformer is the one directly behind the variable condenser. The trimmers for the two i-f transformers are available through holes in the tops of the cans.

The trimmers for the antenna and oscillator are located on the variable condenser. The trimmer on the front section is for the antenna.

The 455 kc wave-trap is mounted on the front chassis wall beneath the variable condenser. The trimmer for the 455 kc wave-trap is mounted on the coil and is accessible from the bottom of the chassis.

I-f and Wave-Trap Alignment

Rotate the wave-band switch to the broadcast (clockwise) position. Set the variable condenser at the minimum capacity position and feed 455 kc, through a 0.02 mf paper condenser, to the grid cap of the 6A7 tube (do not remove the grid clip from the tube). Adjust the four i-f trimmers for maximum response. Feed 455 kc to the antenna through a standard dummy antenna (a .0002 mf condenser may be used as a substitute) and adjust the wave-trap trimmer for *minimum* response. (See General Note No. 1.)

R-f Alignment

With the wave-band switch in the broadcast position, clockwise, set the dial pointer at 140. Feed 1400 kc through a standard dummy antenna (a .0002 mf condenser may be used as a substitute) to the antenna lead and adjust first the oscillator trimmer (on rear section of variable condenser) then the antenna trimmer (on front section of variable condenser) for maximum response.

The police band is self-tracking and does not require any adjustment.

PRODUCTION CHANGES

1. In receivers bearing serial numbers below 1,258,237:
   a. C17 was a .001 mf, 600 volt tubular condenser.
   b. R11 and C18 were connected from the plate of the 41 tube to B plus as shown by the dotted lines on the schematic diagram.
2. In receivers bearing serial numbers below 1,338,800:
   a. The second detector was a type 75.
   b. R9 was a 310 ohm ½ watt wire-wound resistor, part number 3RR-276.
   c. R10 was a 23 ohm ½ watt wire-wound resistor, part number 3RR-266.
3. In receivers bearing serial numbers below 1,433,600 the wave-trap was part number MMT-149A. (Interchangeable with 4DT-343.)
4. a. In receivers bearing serial numbers below 1,335,494 the antenna coil was part number 3RT-318.
   b. In receivers bearing serial numbers between 1,335,494 and 1,433,600 the antenna coil was part number 3RT-384. With both of these coils C10 was 0.001 mf.
   c. Receivers above serial number 1,433,600 use 3RT-384A which is interchangeable with 3RT-318 and 3RT-384A when C10 is changed to 0.0012 mf. The lug arrangement for these coils is shown in Fig. 1.
5. In receivers bearing serial numbers below 1,355,050 the pilot light was part number XL-9 (screw-type base).

©John F. Rider, Publisher

Chassis BN
Schematics, Changes
Voltage, Parts, Alignment

EMERSON RADIO & PHONO. CORP.

MODELS BM206, BM215, BM216
Chassis BM
MODELS BN206, BN215

*Item Model BM	*Item Model BN	Part No.	DESCRIPTION (Subject to change without notice)	List Price as Effective as of July 1st, 1938	PRICE
T1	T1	5NT-437	Antenna coil		$ .60
T2	T2	5NT-438	Detector coil		.50
R1	——	2VR-219E	Volume control, 75,000 ohms, with line switch		.90
——	R1	2VR-219G	Volume control, 75,000 ohms, with line switch		.90
R2	R2	3CR-294	240 ohm, ½ watt wire-wound resistor		.16
R3	R3	L55-BG	Plug-in ballast tube		.55
R4	R4	KR-63U	15,000 ohm, ¼ watt carbon resistor		.16
R5	R5	HR-42U	2 megohm, ¼ watt carbon resistor		.16
R6, R7	R6, R7	KR-56U	500,000 ohm, ¼ watt carbon resistor		.16
R8	R8	3QR-297	110 ohm, ½ watt wire-wound resistor		.16
——	R9, R10	KR-65	250,000 ohm, ¼ watt carbon resistor		.16
C1, C2	C1, C2	5MC-399	Two-gang variable condenser		3.55
C3	C3	NNC-199	.001 mf, 600 volt tubular condenser		.20
†C4, C5	†C4, C5		Trimmers, part of variable condenser.		
C6, C8	C6, C8	AC-6	.1 mf, 200 volt tubular condenser		.20
C7	C7	5AC-888	.25 mf, 100 volt tubular condenser		.20
C9	C9, C15	LC-65	.02 mf, 400 volt tubular condenser		.20
C10	C10	LC-64	.05 mf, 400 volt tubular condenser		.20
C11	C11	EEC-132	.1 mf, 400 volt tubular condenser		.20
C12, C13	C12, C13	4DC-845A	Dual 16 mf, 100 volt dry electrolytic condenser (See prod. ch.)		1.20
C14	C14	5AC-584	.0002 mf, 600 volt tubular or mica condenser		.20
——	C16, C17	BC-12	.05 mf, 200 volt tubular condenser		.20
——	C18	BC-13	.25 mf, 200 volt tubular condenser		.20
		5BS-333	5" dynamic speaker (Model BM)		3.90
		5NS-335	5" dynamic speaker (Model BN)		4.10
		4BL-94	Pilot light, 6.3 volt, .25 amp., Mazda No. 44		.20
		4XM-867	Drive pulley		.10
		5MZ-829	Dial crystal (Model BM)		.10
		5NE-11	Dial crystal (Model BN)		.15
		5MZ-830	Drive shaft and pulley		.10
		4MZ-588B	Dial pointer		.20
		4YZ-772	Drive cord		.02
		5JZ-824	Drive cord spring		.05
		5MZ-831	Dial face (Model BM)		.55
		5ND-57	Dial face (Model BN)		.15
			ADDITIONAL PARTS USED ON BM-216 COMBINATION		
	R11	KR-54	100,000 ohm, ¼ watt carbon resistor		.16
	R12	2VR-219H	Phono volume control with motor switch—75,000 ohms		.90
	S1	5MS-348	Phono-radio-tone control switch		.60
	C19	XXC-207	.005 mf, 400 volt tubular condenser		.20
		4XPM-15	Phono motor		12.20
		4XZ-860	Crystal pick-up		9.85
		3LM-253	Phonograph needle cup		.20

TUBE DATA

1—6D6, r-f amplifier.
1—6C6, biased detector.
1—25L6G, beam power output.
1—25Z5, dual half-wave rectifier.
1—L55BG, ballast tube.

Note: Octal-base tubes may be replaced with either metal tubes or equivalent octal-base glass tubes.

PRODUCTION CHANGE

On early BM and BN chasses the red lead from the dual electrolytic condenser is connected to the 25Z5 cathodes and green lead to the 6D6 screen. In later models the green lead is connected to 25Z5 and red to 6D6. Replacements should be connected as in the later models.

IN RECEIVERS BEARING SERIAL NUMBERS ABOVE 1821050, CONDENSER C18 IS 0.1 MFD-200 VOLT.

BM-216 SCHEMATIC ON NEXT PAGE

VOLTAGE ANALYSIS

Readings should be taken with a 1000 ohms-per-volt meter. Voltages listed below are from point indicated to ground (chassis) with volume control turned on full and no signal. The line voltage for these readings was 117.5 volts, 60 cycles, a.c. All readings except heaters and cathodes were taken on 250 volt scale.

Tube	Plate	Screen	Cathode	Fil.
6D6	100	100	2.3	6.3
6C6	20	15	2.1	6.3
25L6G	93	100	6	25.0

Voltage across speaker field—26 volts.
25Z6 cathode to ground—126 volts.

Voltage rating ..... 105 to 125 volts.
Power consumption .. 45 watts for receiver.
10 watts for motor in Model BM-216.
Frequency range .... 540 to 1730 kc.

BM. BM-216, BN-81

ALIGNMENT PROCEDURE

An oscillator with a frequency of 1400 kc is required. Use as weak a test signal as possible. An output meter should be used across the voice coil or output transformer for observing maximum response.

Rotate variable condenser to the maximum capacity position and set the pointer at the next calibration mark beyond 55. Then rotate the variable condenser until the pointer is at 140 and feed 1400 kc to the antenna through a .0001 mf mica condenser and adjust both trimmer condensers on the variable condenser for maximum response.

When ordering replacement parts specify part number

*Item number locates the article on the schematic diagram.

†These condensers cannot be supplied separately.

©John F. Rider, Publisher

MODEL BM216, Chassis BM
MODEL BY233, Chassis BY. EMERSON RADIO & PHONOGRAPH CORP.
Schematics

MODEL BM-216, A.C. RADIO-PHONOGRAPH COMBINATION

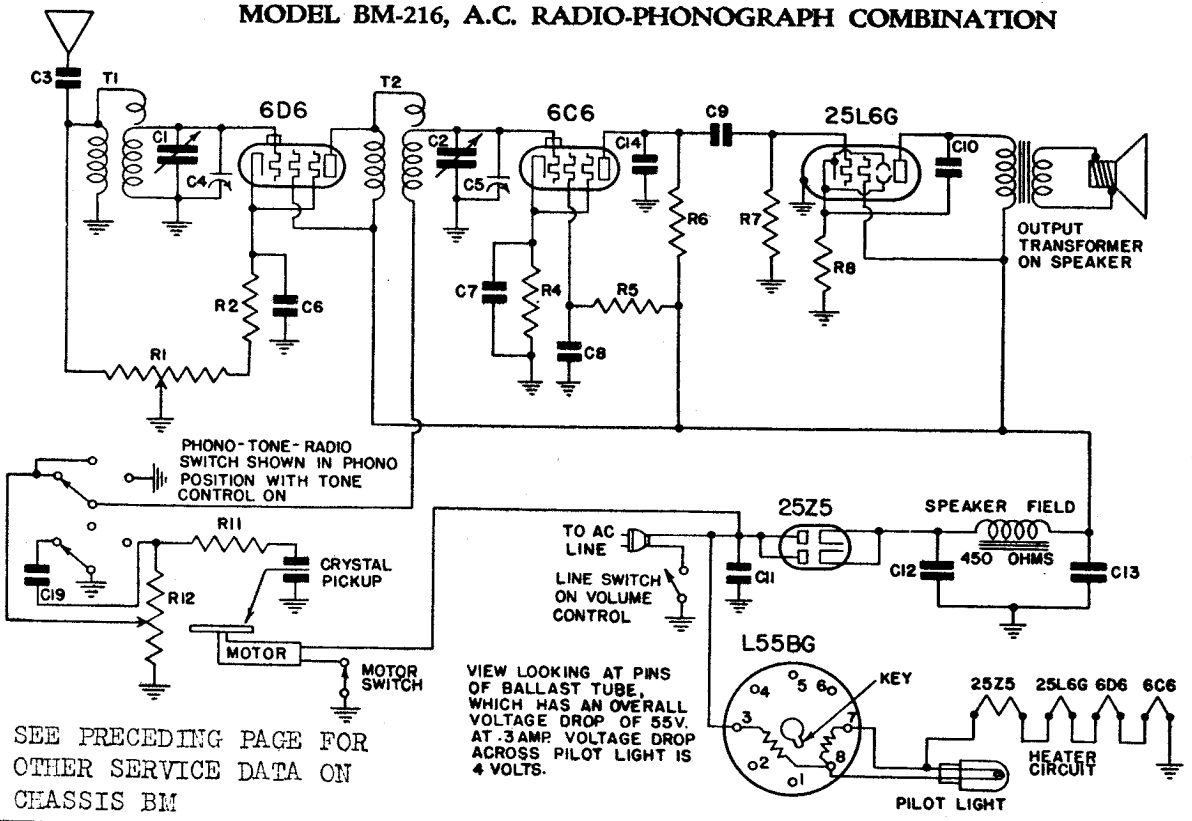

SEE PRECEDING PAGE FOR OTHER SERVICE DATA ON CHASSIS BM

Caution: The motor used in this combination is of the synchronous type and will operate on ALTERNATING CURRENT ONLY. To avoid damaging the motor, the combination should never be used on direct current.

All octal-base tubes are replaceable with either metal or equivalent octal-base glass tubes.

Voltage rating	105-125 volts, a.c. or d.c.
Power consumption	45 watts.
Frequency range	540 to 1730 kc.

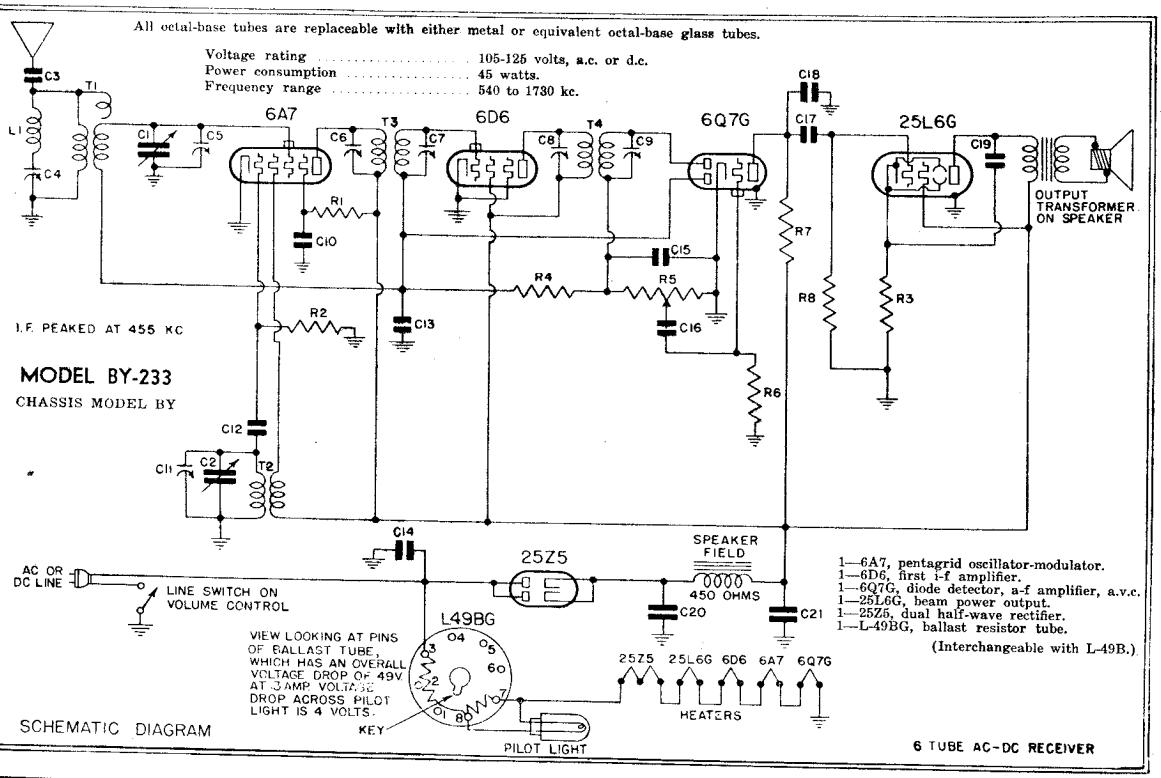

©John F. Rider, Publisher

©John F. Rider, Publisher

GENERAL NOTES

1. If replacements are made or the wiring disturbed in the r-f section of the circuit, the receiver should be carefully realigned.
2. One side of the power line is directly grounded to the chassis base. Under no circumstances, therefore, should a ground wire be permitted to come in contact with any metal part of the receiver.
3. The filament dropping resistor (L-49BG on schematic) is in a special tube at the rear of the chassis. This tube will become quite hot under normal operating conditions. For voltage drop specifications, see below.
4. In operating the receiver on d.c. it may be necessary to reverse the line plug for correct polarity.
5. The color coding of the i-f transformer leads is as follows:

   Grid—green — Plate—blue
   Grid return—black — B plus—red.
6. In congested areas where the installation of a large antenna is not desirable we recommend the use of the Emerson Flexible Mast Antenna, Model W-82. Instructions for the installation of this compact and efficient antenna are supplied with each kit.

   Where the Flexible Mast is installed permanently, it is urgently recommended that the receiver antenna wire be cut. Leave just enough of this wire to reach from the receiver to the window strip connector.
7. The wave-trap in the receiver has been adjusted for maximum signal rejection at 455 kc. If, however, persistent interference is experienced from some particular telegraphic station, readjust the wave-trap trimmer until the response from the interfering station is at a minimum.
8. In replacing the dual 20 mf electrolytic condenser, part no. 4HC-348B, the lead farthest from the mounting bracket should be connected to the rectifier.

VOLTAGE ANALYSIS

Readings should be taken with a 1000 ohms-per-volt meter. Voltages listed below are from point indicated to ground (chassis) with the volume control turned on full and no signal. Line voltage for these readings was 117.5 volts, 60 cycles, a.c. Measurements made with 117.5 volts d.c. will be lower than those given below.

Tube	*Plate*	*Screen*	*Cathode*	*Osc. Plate*	*Fil.*
6A7	100	55	0	100	6.3
6D6	100	100	0	—	6.3
6Q7G	43	—	0	—	6.3
25L6G	92	100	5.5	—	25.0

Voltage at 25Z5 cathode—128 volts.
Voltage across speaker field—28 volts.
Voltage drop across ballast tube (pins 3, 7)—49 volts.
Voltage drop across pilot light section (pins 7, 8)—4 volts.

ADJUSTMENTS

Location of Coils and Trimmer Adjustment.

The first and second i-f transformers are mounted on the left hand inside wall of the chassis. The trimmers for the first i-f transformer are accessible through the lower pair of holes in the side of the chassis. The trimmers for the second i-f transformer are accessible through the upper pair of holes in the chassis.

The trimmers for the antenna and oscillator coils are located on the variable condenser. The trimmer on the front section is for the antenna coil.

The 455 kc wave-trap is mounted on the same form as the antenna coil directly under the 25Z5 and ballast tubes. The trimmer for the 455 kc wave-trap is mounted on the coil and is accessible through a hole in the right side of the chassis.

I-f and Wave-trap Alignment

Rotate the variable condenser to the minimum capacity position. Feed 455 kc to the grid-cap of the 6A7 tube through a .01 mf condenser and adjust the four i-f trimmers for maximum response. Feed 455 kc through a .0001 mf condenser to the antenna lead and adjust the wave-trap trimmer for *minimum* response. (See General Notes, paragraph No. 7.)

R-f Alignment

Set the dial pointer at 140, feed 1400 kc through a .0001 mf condenser to the antenna lead and adjust first the oscillator trimmer (on rear section of variable condenser) then the antenna trimmer (on front section of variable condenser) for maximum response.

Five-Tube, A.C. - D.C., Superheterodyne

*Item	Part No.	DESCRIPTION	PRICE
L1, T1	5YT-444	Antenna coil with adjustable 455 kc wave-trap	$ .90
T2	4XT-433	Oscillator coil	.35
T3	5YT-445	Double-tuned 455 kc first i-f transformer	.95
T4	4XT-435A	Double-tuned 455 kc second i-f transformer	.80
R1	ZZR-196	30,000 ohm ¼ watt carbon resistor	.16
R2	KR-53	50,000 ohm ¼ watt carbon resistor	.16
R3	3FR-293	140 ohm ½ watt wire-wound resistor	.16
R4	KR-57	1 megohm ¼ watt carbon resistor	.16
R5	2NR-214E	Volume control .25 megohm with line switch	.90
R6	4XR-327	15 megohm ¼ watt carbon resistor	.16
R7	KR-55	250,000 ohm ¼ watt carbon resistor	.16
R8	KR-56	500,000 ohm ¼ watt carbon resistor	.16
	L-49BG	Ballast tube. (Interchangeable with L-49B)	.55
C1, C2	5YC-405	Two-gang variable condenser	2.35
C3	4XC-401	0.00055 mf mica condenser	.20
†C4		Trimmer, part of wave-trap assembly.	
†C5, C11		Trimmers, part of variable condenser.	
†C6, C7, C8, C9		Trimmers, part of i-f transformers.	
C10	BC-12	0.05 mf, 200 volt tubular condenser	.20
C12	4XC-393A	0.00006 mf mica condenser	.20
C13	AC-6	0.1 mf, 200 volt tubular condenser	.20
C14	EEC-132	0.1 mf, 400 volt tubular condenser	.20
C15, C18	4XC-394A	0.00022 mf mica condenser	.20
C16	3HC-274	0.002 mf, 600 volt tubular condenser	.20
C17	LC-65	0.02 mf, 400 volt tubular condenser	.20
C19	3FC-336	0.025 mf, 400 volt tubular condenser	.20
C20, C21	4HC-348B	Dual 20 mf, 150 volt dry electrolytic condenser	.90
	3QS-257C	5" dynamic speaker	3.60
	4BL-94	Pilot light, 6.3 volt, .25 amp., Mazda No. 44	.20
	5YD-56	Dial face	.05
	4YZ-772	Drive cord	.02
	5JZ-324	Drive cord spring	.05
	2DD-21E	Dial pointer	.10
	5YE-10	Dial crystal	.05
	4XM-367	Dial drive pulley	.10

When ordering replacement parts specify part numbers. BY-S1

*Item number locates the article on the schematic diagram.

†Not supplied separately.

List Price ea. Effective as of Aug. 1st, 1938 (Subject to change without notice)

An oscillator with frequencies of 455 and 1400 kc is required.

An output meter should be used across the voice coil or output transformer for observing maximum response.

Always use as weak a test signal as possible when aligning the receiver.

©John F. Rider, Publisher

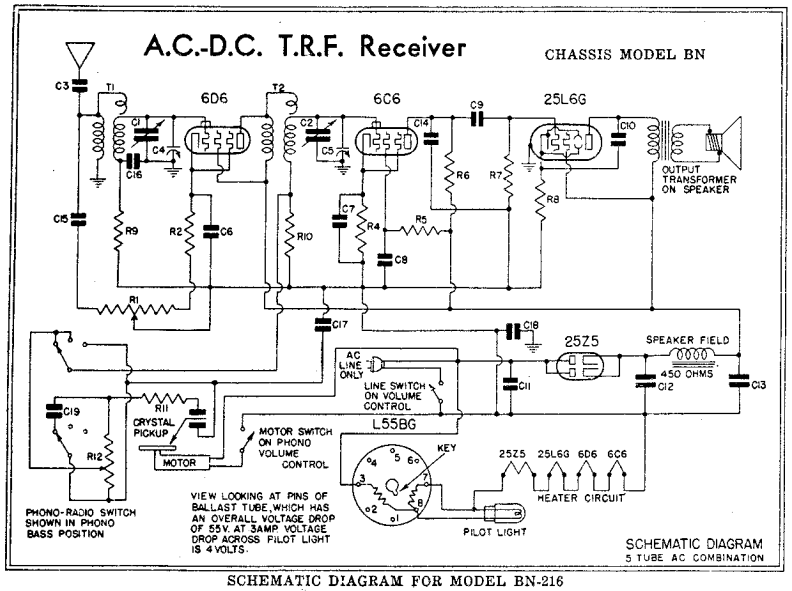

SCHEMATIC DIAGRAM FOR MODEL BN-216

PRODUCTION CHANGES

On early BN chasses the red lead from the dual electrolytic condenser is connected to the 25Z5 cathodes and green lead to the 6D6 screen. In later models the green lead is connected to 25Z5 and red to 6D6. Replacements should be connected as in the later models.

In receivers bearing serial numbers below 1,821,050 C18 is .25 mf 200 volt.

MOTOR CAUTION

The motor used in the combination Model BN-216 is of the synchronous type and will operate on ALTERNATING CURRENT ONLY. To avoid seriously damaging the motor, the combination should never be used on direct current.

VOLTAGE ANALYSIS

Tube	*Plate*	*Screen*	*Cathode*	*Fil.*
6D6	100	100	2.3	6.3
6C6	20	15	2.1	6.3
25L6G	93	100	6	25.0

Voltage across speaker field—26 volts.

25Z5 cathode to ground—126 volts.

Voltage across ballast tube (pins 3, 7)—55 volts.

Voltage across pilot light section (pins 7, 8)—4 volts.

R11 1—6D6, r-f amplifier.
1—6C6, biased detector.
R12 1—25L6G, beam power output.
1—25Z5, dual half-wave rectifier.
C19 1—L55BG, ballast tube.
(Interchangeable with L55B.)

The ballast resistor (L55BG on schematic) is in a special tube at the rear of the chassis. In normal operation this tube will become quite hot. For voltage drop specifications, see "Voltage Analysis" above.

Readings should be taken with a 1000 ohms-per-volt meter. Voltages listed below are from point indicated to ground (chassis) with volume control turned on full and no signal. The line voltage for these readings was 117.5 volts, 60 cycles, a.c. All readings except heaters and cathodes were taken on 250 volt scale.

ALIGNMENT PROCEDURE

An oscillator with a frequency of 1400 kc is required.

Use as weak a test signal as possible. An output meter should be used across the voice coil or output transformer for observing maximum response.

Rotate variable condenser to the maximum capacity position and set the pointer at the next calibration mark beyond 55. Then rotate the variable condenser until the pointer is at 140 and feed 1400 kc to the antenna through a .0001 mf mica condenser and adjust both trimmer condensers on the variable condenser for maximum response.

A.C. Radio-Phonograph Combination — MODEL BN-216

List Price as Effective as of Aug. 1st, 1938

(See Caution—PHONO MOTOR)

*Item	Part No.	DESCRIPTION	PRICE
T1	5NT-437	Antenna coil	$ .50
T2	5NT-438	Detector coil	.50
R1	2VR-219G	Volume control, 75,000 ohms, with line switch	.90
R2	3CR-294	240 ohm, ½ watt wire-wound resistor	.16
R3	L55-BG	Plug-in ballast tube	.55
R4	KR-63U	15,000 ohm, ¼ watt carbon resistor	.16
R5	HR-42U	2 megohm, ¼ watt carbon resistor	.16
R6, R7	KR-56U	500,000 ohm, ¼ watt carbon resistor	.16
R8	3QR-297	110 ohm, ½ watt wire-wound resistor	.16
R9, R10	KR-55U	250,000 ohm, ¼ watt carbon resistor	.16
C1, C2	5MC-399	Two-gang variable condenser	3.55
C3	NNC-199	.001 mf, 600 volt tubular condenser	.20
†C4, C5		Trimmers, part of variable condenser.	
C6, C8, C18	AC-6	.1 mf, 200 volt tubular condenser	.20
C7	5AC-388	.25 mf, 100 volt tubular condenser	.20
C9, C15	LC-65	.02 mf, 400 volt tubular condenser	.20
C10	LC-64	.05, 400 volt tubular condenser	.20
C11	EEC-132	.1 mf, 400 volt tubular condenser	.20
C12, C13	DC-345A	Dual 16 mf, 100 volt dry electrolytic condenser (See production changes)	1.20
C14	5AC-384	.0002 mf, 600 volt tubular or mica condenser	.20
C16, C17	BC-12	.05 mf, 200 volt tubular condenser	.20
	5NS-335	5" dynamic speaker	4.10
	4BL-94	Pilot light, 6.3 volt, .25 amp., Mazda No. 44	.20
	4XM-367	Drive pulley	.10
	5NE-11	Dial crystal	.15
	5MZ-830	Drive shaft and pulley	.10
	4MZ-588B	Dial pointer	.20
	4YZ-772	Drive cord	.02
	5JZ-824	Drive cord spring	.05
	5ND-57	Dial face	.15

ADDITIONAL PARTS USED ON BN-216 COMBINATION

R11	KR-54	100,000 ohm, ¼ watt carbon resistor	.16
R12	2VR-219H	Phono volume control with motor switch—75,000 ohms	.90
	5MS-348	Phono-radio-tone control switch	.60
C19	XXC-207	.005 mf, 400 volt tubular condenser	.20
	4XPM-15 or 4XPM-20	A.C. phonograph motor (synchronous type) / A.C. phonograph motor (self-starting type)	12.20 / 12.65
	4XZ-850 or 4XC-411	Crystal pick-up (metal tone-arm) / Crystal pick-up (wooden tone-arm)	9.85 / 9.30
	3LM-253	Phonograph needle cup	.20

*Item number locates the article on the schematic diagram.

†These trimmer condensers are part of the coil assemblies and cannot be supplied separately.

BN-BN-216-S-1

Voltage rating ..... 105 to 125 volts.

Power consumption ..... 45 watts for receiver.
10 watts for motor in Model BN-216.

Frequency range ..... 540 to 1730 kc.

PRICES ARE SUBJECT TO CHANGE WITHOUT NOTICE

Note: Octal-base tubes may be replaced with either metal tubes or equivalent octal-base glass tubes.

Chassis AX
Schematics, Voltage

EMERSON RADIO & PHONO. CORP.

MODELS AX211, AX212
AX217, AX219

MODELS AX-211, AX-212 and AX-217

A.C.-D.C.

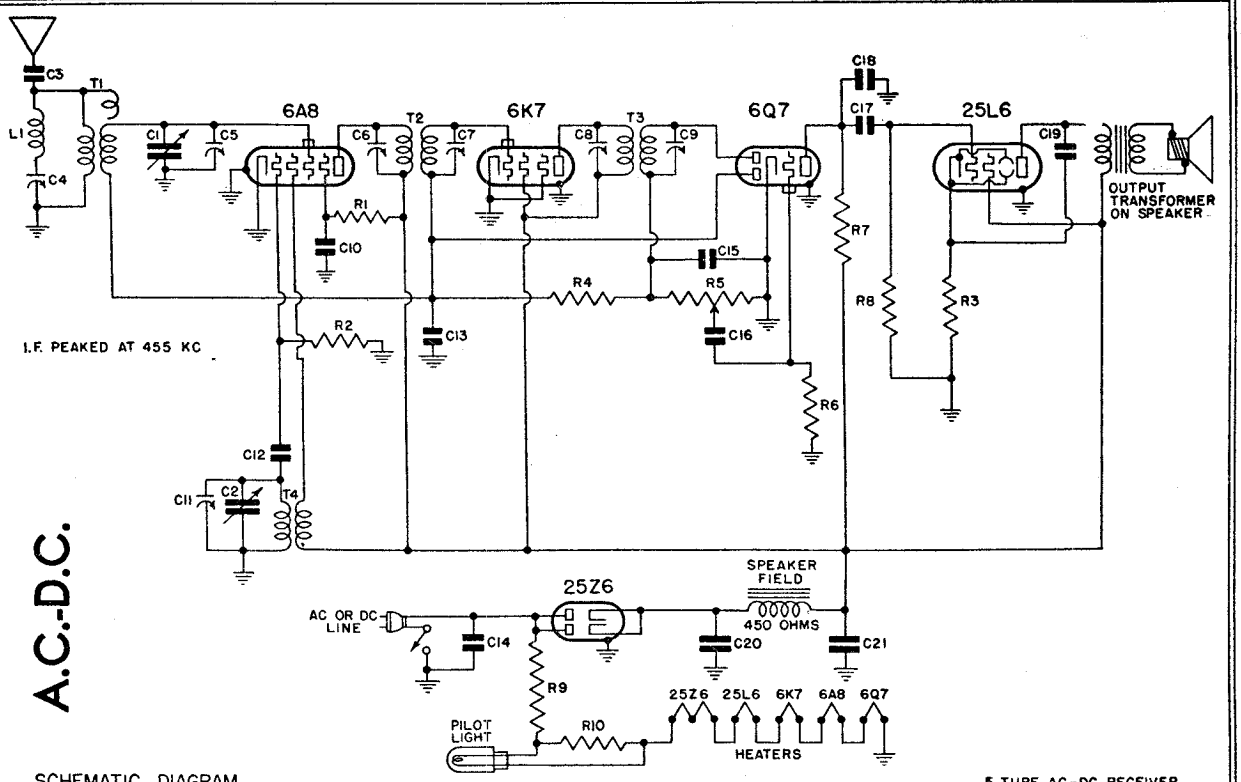

SCHEMATIC DIAGRAM No. 1

MODEL AX-219 (See Note No. 8)

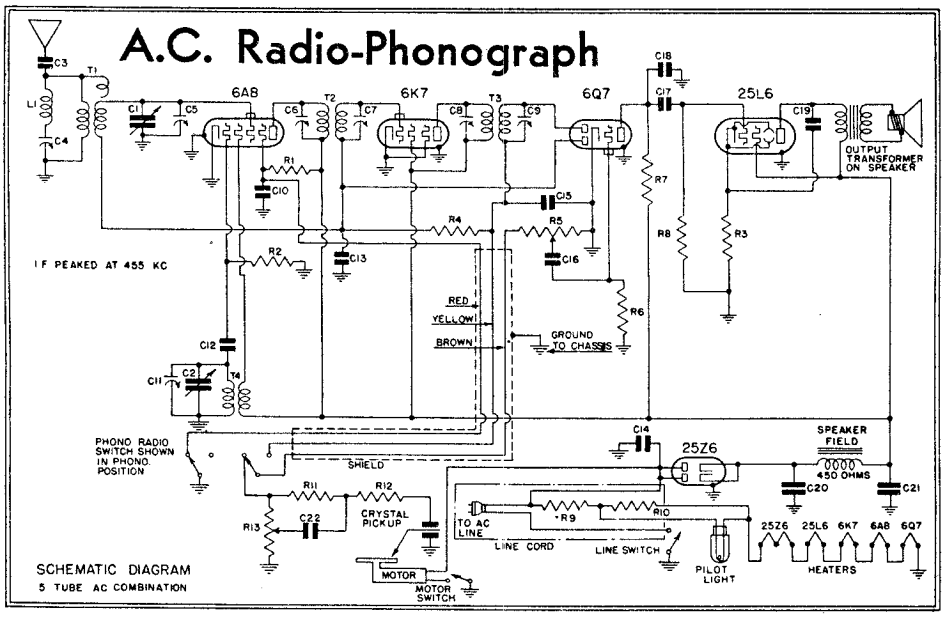

SCHEMATIC DIAGRAM No. 2

Tube Data CHASSIS MODEL AX

1—6A8 or 6A8GT, pentagrid oscillator modulator.
1—6K7 or 6K7GT, first i-f amplifier.
1—6Q7 or 6Q7GT, diode detector, a-f amplifier, a.v.c.
1—25L6 or 25L6GT, beam power output.
1—25Z6 or 25Z6GT, dual half-wave rectifier.
All tubes are replaceable with either metal or equivalent bantam glass tubes.

Voltage rating ..... 105-125 volts.
Power consumption ... 45 watts for receiver.
10 watts for motor on Model AX-219.
Frequency ranges .... 540 to 1730 kc.

Readings should be taken with a 1000 ohms-per-volt meter. Voltages listed below are from point indicated to ground (chassis) with the volume control turned on full and no signal. Line voltage for these readings was 117.5 volts, 60 cycles, a.c. All readings except heaters and cathodes were taken on 250 volt scale. Measurements made with 117.5 volts d.c. will be lower than those given below.

Tube	*Plate*	*Screen*	*Cathode*	*Osc. Plate*	*Fil.*
6A8	100	55	0	100	6.3
6K7	100	100	0	—	6.3
6Q7	43	—	0	—	6.3
25L6	92	100	5.5	—	25.0

Voltage at 25Z6 cathode—128 volts.
Voltage across speaker field—28 volts.

VOLTAGE ANALYSIS

©John F. Rider, Publisher

MODELS AX211,-212,-217,-219
Chassis AX
Alignment,Notes,Parts

EMERSON RADIO & PHONOGRAPH CORP.

GENERAL NOTES

1. If replacements are made or the wiring disturbed in the r-f section of the circuit, the receiver should be carefully realigned.
2. One side of the power line is directly grounded to the chassis base. Under no circumstances, therefore, should a ground wire be permitted to come in contact with any metal part of the receiver.
3. The filament dropping resistor (R-9—see schematic) is a resistance wire in the special line cord. The cord will, therefore, become warm under normal operating conditions. To insure good heat radiation stretch out the line cord to its full length. Do not attempt to shorten it by cutting.
4. In operating the receiver on d.c. it may be necessary to reverse the line plug for correct polarity.
5. The color coding of the i-f transformer leads is as follows:
   Plate—blue
   B plus—red.
   Grid—green
   Grid return—black
6. In congested areas where the installation of a large antenna is not desirable we recommend the use of the Emerson Flexible Mast Antenna, Model W-82. Instructions for the installation of this compact and efficient antenna are supplied with each kit.
   Where the Flexible Mast is installed permanently, it is urgently recommended that the receiver antenna wire be cut. Leave just enough of this wire to reach from the receiver to the window strip connector.
7. The wave-trap in the receiver has been adjusted for maximum signal rejection at 455 kc. If, however, persistent interference is experienced from some particular telegraphic station, readjust the wave-trap trimmer until the response from the interfering station is at a minimum.
8. The phonograph motor of Model AX-219 is of the a.c. synchronous type. To avoid damaging the motor, the combination should be used on ALTERNATING CURRENT ONLY.
9. To remove the 6A8 tube from its socket, push up on its center pin from beneath the chassis.

REPLACEMENT PARTS

*Item	Part No.	DESCRIPTION	List Price ea. Effective as of July 1st, 1938 (Subject to change without notice) PRICE
L1, T1	4XT-432	Antenna coil with adjustable 455 kc wave-trap	$ .90
T4	4XT-433	Oscillator coil	.35
T2	4XT-434	Double-tuned 455 kc first i-f transformer	1.10
T3	4XT-435	Double-tuned 455 kc second i-f transformer	.85
R1	ZZR-196	30,000 ohm ¼ watt carbon resistor	.16
R2	KR-53	50,000 ohm ¼ watt carbon resistor	.16
R3	3FR-293	140 ohm ½ watt wire-wound resistor	.16
R4	KR-57	1 megohm ¼ watt carbon resistor	.16
R5	4XR-328A	Volume control .25 megohm with line switch	.95
R6	4XR-827	15 megohm ¼ watt carbon resistor	.16
R7	KR-55	250,000 ohm ¼ watt carbon resistor	.16
R8	KR-56	500,000 ohm ¼ watt carbon resistor	.16
R9, R10	4XW-112	Resistance line cord with pilot light ballast section R9—150 ohms; R10—40 ohms	.85
C1, C2	4XC-391	Two-gang variable condenser	2.40
C3	4XC-401	0.00055 mf mica condenser	.20
†C4		Trimmers, part of wave-trap assembly.	
†C5, C11		Trimmers, part of variable condenser.	
†C6, C7, C8, C9		Trimmers, part of i.f. transformers.	
C10	BC-12	0.05 mf, 200 volt tubular condenser	.20
C12	4XC-398A	0.00006 mf mica condenser	.20
C13	AC-6	0.1 mf, 200 volt tubular condenser	.20
C14	EEC-132	0.1 mf, 400 volt tubular condenser	.20
C15, C18	4XC-394A	0.00022 mf mica condenser	.20
C16	3HC-274	0.002 mf, 600 volt tubular condenser	.20
C17	LC-65	0.02 mf, 400 volt tubular condenser	.20
C19	3PC-336	0.025 mf, 400 volt tubular condenser	.20
C20, C21	4HC-348B	Dual 20 mf, 150 volt dry electrolytic condenser	.90
	4XS-324	4" dynamic speaker (for 211, 212, and 217 cabinets)	3.70
	4BL-94	Pilot light, 6.3 volt, .25 amp., Mazda No. 44	.20
	4XZ-810A	Dial face	.20
	4YZ-772	Drive cord	.02
	5JZ-824	Drive cord spring	.05
	4XZ-811A	Drive shaft	.05
	4XZ-812A	Dial pointer	.02
	4XZ-815	Dial crystal (for 211 and 212 cabinets)	.10
	4XB-1	Dial crystal (for 217 and 219 cabinets)	.10
	4XZ-816	Dial face fasteners	.01

ADJUSTMENTS

An oscillator with frequencies of 455 and 1400 kc is required.

An output meter should be used across the voice coil or output transformer for observing maximum response.

Always use as weak a test signal as possible when aligning the receiver.

Location of Coils and Trimmer Adjustments

The first i-f transformer is mounted on top of the chassis deck beside the speaker. The trimmers are accessible through holes in the top of the can.

The second i-f transformer is mounted underneath the chassis beneath the variable condenser. The trimmers are accessible through holes in the top of the chassis directly beneath the variable condenser.

The trimmers for the antenna and oscillator coils are located on the variable condenser. The trimmer on the front section is for the antenna coil.

The 455 kc wave-trap is mounted on the same from as the antenna coil directly behind the speaker. The trimmer for the 455 kc wave-trap is mounted on the coil and is accessible from the rear of the chassis. The oscillator coil is located underneath the chassis, beneath the first i-f transformer.

I-f and Wave-trap Alignment

Swing the variable condenser to the maximum capacity position. Feed 455 kc to the grid-cap of the 6A8 tube through a .01 mf condenser and adjust the four i-f trimmers for maximum response. Feed 455 kc through a .0001 mf condenser to the antenna lead and adjust the wave-trap for *minimum* response. (See General Notes, paragraph No. 7.)

R-f Alignment

Set the dial pointer at 140. Feed 1400 kc through a .0001 mf condenser to the antenna lead and adjust first the oscillator trimmer (on rear section of variable condenser) then the antenna trimmer (on front section of variable condenser) for maximum response.

ADDITIONAL PARTS USED ON AX-219 (Schematic Diagram No. 2)

R11, R12	KR-56	500,000 ohm ¼ watt carbon resistor	.16
R13	4LR-312B	500,000 ohm tone control with motor line switch	1.05
C22	IC-47A	0.0005 mf mica condenser	.20
	TTS-111S	Phono-radio switch	.55
	4XZ-850	Crystal pick-up	9.85
	4XPM-15	Phonograph motor	12.20
	3LM-253	Needle cup	.20
	4XS-324A	4" dynamic speaker (for 219 cabinet)	3.70

*Item number locates the article on schematic diagram.

†Not supplied separately.

©John F. Rider, Publisher

MODELS BQ225,BQ228,Chassis BQ
MODELS BU229,BU230,Chassis BU

EMERSON RADIO

MODEL BW231,Chassis BW
Schematic,Voltage,Parts

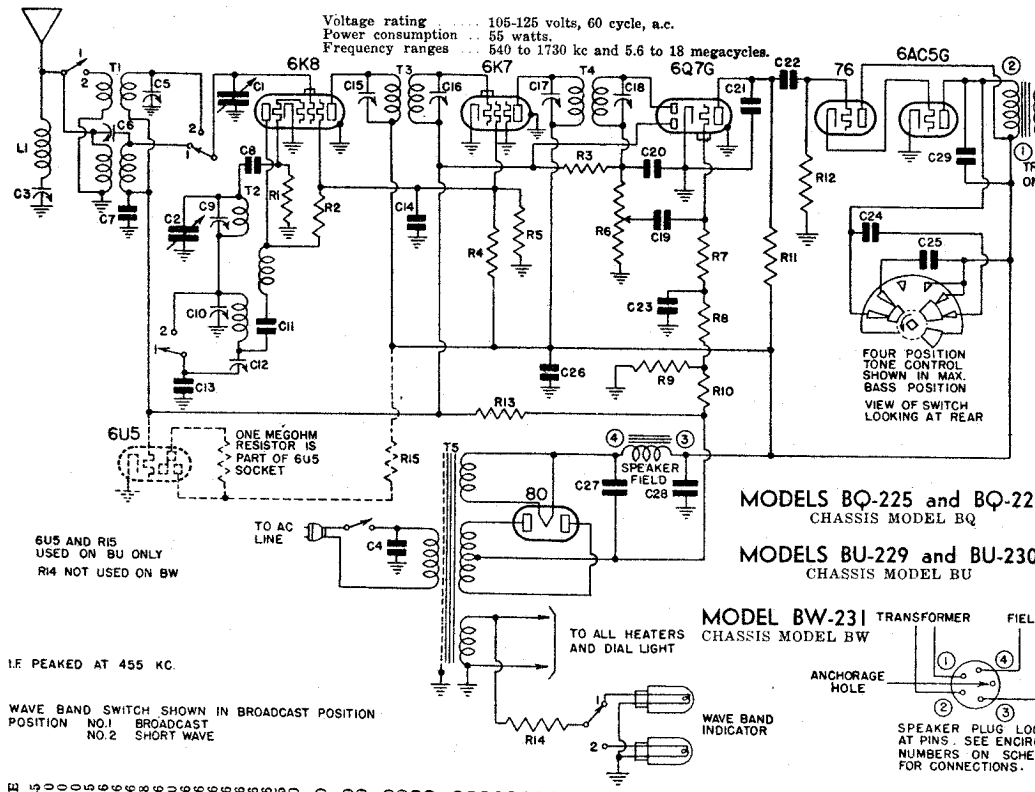

Models BQ and BW

1—6K8, triode-hexode oscillator-modulator.
1—6K7, i-f amplifier.
1—6Q7G, diode detector, audio amplifier and a.v.c.
1—76, audio amplifier.
1—6AC5G, power output.
1—6U5, electron-ray tuning indicator.
1—80, full-wave rectifier.

Model BU

1—6K8, triode-hexode oscillator-modulator.
1—6K7, i-f amplifier.
1—6Q7G, diode detector, audio amplifier and a.v.c.
1—76, audio amplifier.
1—6AC5G, power output.
1—6U5, electron-ray tuning indicator.
1—80, full-wave rectifier.

BQ, BU, BW-51

*Item	Part No.	DESCRIPTION	List Price to Effective as of Aug. 1st, 1938 (Subject to change without notice)	PRICE
T1, L1	4RT-418	Two-band antenna coil with 455 kc wave-trap		$1.85
T2	5QT-446	Two-band oscillator coil		1.10
T3	4ZT-425A	455 kc first i-f transformer		1.20
T4	3RT-321C	455 kc second i-f transformer		1.10
T5	4ZT-426A	Power transformer		3.95
R1	KR-63	50,000 ohm ¼ watt carbon resistor		.16
R2	LR-65	10,000 ohm ¼ watt carbon resistor		.16
R3, R7	11R-42	2 megohm ¼ watt carbon resistor		.16
R4	3BR-246	10,000 ohm 2 watt carbon resistor		.28
R5	3BR-247	40,000 ohm ½ watt carbon resistor		.16
R6	3XR-277	Volume control .5 megohm with line switch		1.00
R8, R11	KR-55	.25 megohm ¼ watt carbon resistor		.16
R9	3GR-281	46 ohm ½ watt wire-wound resistor		.16
R10	KR-525	175 ohm ½ watt wire-wound metallized resistor		.16
R12	3BR-275	1 megohm ¼ watt carbon resistor		.16
R13	4ZR-326	8 ohm ½ watt wire-wound resistor (not used on BW)		.16
R14	GR-302	20,000 ohm 1 watt carbon resistor (not used on BQ or BW)		.16
R15	5WC-402	Two-gang variable condenser (used on BQ and BU)		3.55
C1, C2	5WC-408	Two-gang variable condenser (used on BW)		3.50
†C3		Trimmer, part of wave-trap assembly.		
C4	3LC-297A	0.01 mf, 400 volt molded condenser		.20
†C5, C6		Trimmers, part of antenna coil assembly.		
C7	BC-12	0.05 mf, 200 volt tubular condenser		.20
C8	4XC-393A	0.00005 mf mica condenser		.20
†C9, C10		Trimmers, part of oscillator coil assembly.		
C11, C19	KC-58	0.01 mf, 400 volt tubular condenser		.20
C12	2NC-231A	Single adjustable padding condenser. Range: 300-600 mmf		.30
C13	3EC-267	0.0042 mf mica condenser		.40
C14	BC-13	0.25 mf, 200 volt tubular condenser		.20
†C15, C16, C17, C18		Trimmers, part of i-f transformers.		
C20	5LC-410A	0.00011 mf mica condenser		.20
C21	5AC-384	0.0002 mf, 600 volt tubular or mica condenser		.20
C22	LC-65	0.02 mf, 400 volt tubular condenser		.20
C23	AC-6	0.1 mf, 200 volt tubular condenser		.20
C24	OQC-173	0.015 mf, 600 volt tubular condenser		.20
C25	EC-23	0.03 mf, 400 volt tubular condenser		.20
C26	EEC-132	0.1 mf, 400 volt tubular condenser		.20
C27	4ZC-379	16 mf, 375 volt wet electrolytic condenser		.95
C28	4ZC-380	16 mf, 285 volt wet electrolytic condenser		.80
C29	3RC-373	0.0004 mf, 600 volt tubular or mica condenser		.20
	5WS-352	8" dynamic speaker (for 231 cabinet)		7.50
	5QS-340	10" dynamic speaker (for 225 and 230 cabinets)		9.70
	4RS-306A	6½" dynamic speaker (for 228 and 229 cabinets)		5.60
	5DS-318B	Wave-band switch		.85
	4ZS-317	Tone-control switch		.80
	4IL-94	Pilot light, 6.3 volt, .25 amp. Mazda No. 44		.20
	3XZ-684	Electron-ray cable and socket (for BU only)		.80
	4YZ-844	Conical escutcheon with crystal		1.90

THE FOLLOWING PARTS ARE USED ON MODELS BQ AND BU ONLY:

	5QM-360	Six-button mechanical tuning unit (including variable condenser)	11.40
	5QM-391	Push-button background plate	.30
	5QD-52	Conical dial face	1.70
	5QP-7	Escutcheon for push-buttons	.15
	4VZ-763A	Celluloid push-button caps (set of 6)	.05
	5RZ-835	Push-buttons	.05
	5QF-13	Adjusting	.05
	4VZ-725	Station name cards (complete set)	.65
	5UE-12	Wave-band indicator and escutcheon (for BU-230)	.25
	5SE-4	Escutcheon for electron-ray tuning indicator	.05

THE FOLLOWING PARTS ARE USED ON MODEL BW ONLY:

	4XM-367	Dial drive pulley	.10
	4YZ-772	Dial drive cord	.02
	5JZ-824	Drive cord spring	.05
	4VZ-739	Conical dial face	1.70

*Item number locates the article on the schematic diagram

†These trimmer condensers are part of the coil assemblies and cannot be supplied separately.

VOLTAGE ANALYSIS

Readings should be taken with a 1000 ohms-per-volt meter. Voltages listed below are from point indicated to ground (chassis) with the volume control turned on full and no signal. Line voltage for these readings was 117.5 volts, 60 cycles, a.c. All readings except B plus at rectifier, heaters, and cathode voltages were taken on 250 volt scale.

Tube	Plate	Screen	Cathode	Osc. Plate	Fil.
6K8	215	100	0	75	6.3 a.c.
6K7	215	100	0	—	6.3 a.c.
6Q7G	100	—	0	—	6.3 a.c.
76	215	—	11	—	6.3 a.c.
6AC5G	195	—	0	—	6.3 a.c.

Voltage at 80 filament to B minus (center tap of high voltage winding on power transformer)—300 volts.
Voltage across speaker field—70 volts.
The grid bias for all tubes is developed across resistors R-9 and R-10 (see schematic). The total voltage measured across R-9 and R-10 should be 12 volts.

©John F. Rider, Publisher

©John F. Rider, Publisher

ADJUSTMENTS

MODEL NUMBERS ARE IDENTIFIED IN INDEX

An oscillator with frequencies of 455, 600, 1600 and 16,000 kc should be used.
An output meter should be used across the voice coil or output transformer for observing maximum response.
If the circuit is at all disturbed, both the broadcast and short-wave bands must be realigned.
The set's oscillator is higher in frequency than the signal, so images should be observed on the low frequency side of the signals.
Always choose the minimum capacity peak on oscillator trimmers and maximum capacity peaks on antenna trimmers. The last motion in adjusting trimmers should always be a tightening one, not a loosening one.
Never leave a trimmer with the outside plate so loose that there is no tension on the screw. Either bend the plate up or remove the screw entirely.
Always use as weak a test signal as possible during alignment.

Location of Coils and Trimmer Adjustments

The two i-f transformers are located on top of the chassis deck. The second i-f is the one directly behind the variable condenser. The four trimmers, two for each transformer, are accessible through holes in the tops of the cans.
The adjustable padding condenser for the broadcast band is mounted underneath the chassis (in front of the 76 tube) with the screw adjustment accessible through a hole in the top of the chassis.
The antenna coils for the broadcast and short-wave bands and the 455 kc wave-trap are wound on one form and mounted underneath the chassis deck near the 76 tube socket. The trimmers for these coils are accessible through holes in the top of the chassis. The trimmer nearest the front of the chassis is the short-wave antenna trimmer. The central trimmer is the broadcast antenna trimmer. The trimmer nearest the rear of the chassis is the 455 kc wave-trap.
The oscillator coils for the broadcast and short-wave bands are wound on one form and are mounted on the inside of the rear chassis wall. The trimmers for these coils are accessible through holes in the rear of the chassis. The trimmer farthest from the end of the chassis is for short-wave and trimmer closest to the end of the chassis is for broadcast.

I-f and Wave-Trap Alignment

Rotate the wave-band switch to the broadcast (clockwise) position. Set the variable condenser at the minimum capacity position and feed 455 kc, through a 0.02 mf paper condenser, to the grid cap of the 6K8 tube (do not remove the grid clip from the tube). Adjust the four i-f trimmers for maximum response. Feed 455 kc to the antenna through a standard dummy antenna (a 0.0002 mica condenser may be substituted) and adjust the wave-trap trimmer (farthest from front on right side of the chassis) for *minimum* response. (See General Note No. 6.)

Short-wave Alignment (Alignment of the short-wave band should precede broadcast alignment.)

Since the dial indicator is fastened to the cabinet, a piece of stiff wire should be fastened to the dial assembly plate and bent over to form a dial pointer when the chassis is removed from the cabinet. Set pointer at extreme low-frequency end of dial with condenser closed.
Use a 400 ohm dummy antenna (a 400 ohm non-inductive resistor in series with the test oscillator antenna lead) when aligning the short-wave coils. Rotate the wave-band switch to the short-wave (counter-clockwise) position, and set the dial exactly at 16 megacycles. Feed 16,000 kc to the antenna and adjust the short-wave oscillator trimmer (farthest from end on rear chassis wall) for maximum response and then adjust the short-wave antenna trimmer (nearest the front on the right side of the chassis) for maximum response. Be very careful to choose the minimum capacity peak on the oscillator trimmer.

Broadcast Alignment

By adding a cipher to each figure on the broadcast band calibration, this scale can be made to read directly in kilocycles.
Use a standard dummy antenna in aligning the broadcast coils. (A .0002 condenser may be substituted.) Rotate the wave-band switch to the broadcast (clockwise) position. Set the dial at 60 and feed 600 kc. Adjust the broadcast series padder (in corner near 76 tube) for maximum response. Move the dial to 160 and feed 1600 kc. Adjust the broadcast oscillator trimmer (closest to end on rear chassis wall) for maximum response and then adjust the broadcast antenna trimmer (central trimmer at right side of chassis). Return dial to 60, feed 600 kc and readjust the broadcast series padder, rocking the variable condenser (rotate the variable condenser shaft back and forth through a small arc) for maximum response.

GENERAL NOTES

1. The receiver should never be turned on with either the speaker plug or the 6AC5G tube out of their respective sockets, since the rapid rise in rectifier voltage will damage the electrolytic condenser.
2. When replacing the chassis in the cabinet take precautions to keep any part of the dial and condenser assembly from touching the cabinet, otherwise microphonism will result.
3. The color coding of the i-f transformers is as follows:
   Grid—green — Grid return—black
   B plus—red — Plate—blue.
4. The color coding of the power transformer is as follows:
   Primary—two black leads
   High-voltage secondary—two red leads
   High-voltage secondary center tap—red and yellow lead
   6.3 volt secondary—two green leads
   5 volt secondary—two yellow leads.
5. The adjustable padding condenser for the broadcast band is mounted underneath the chassis (in the corner near the wave-band switch) with the screw adjustment accessible through a hole in the top of the chassis. The short-wave band has a fixed padder, C13 on schematic. When replacing this fixed padder be careful to use a condenser which has a capacity within 2% of the specified value, otherwise the short-wave coils may not track.
6. The wave-trap in the receiver has been adjusted for maximum signal rejection at 455 kc. If, however, persistent interference is experienced from some particular telegraph station the wave-trap trimmer may be readjusted until the response from the interfering station is at a minimum.

Emerson

Preadjustment of Station Push-buttons

MIRACLE INSTAMATIC TUNING

The six push-buttons provide a choice of six favorite broadcast stations for Miracle Instamatic Tuning. Adjustments for any particular station must be made by means of the small cross-slotted button immediately below the chosen push-button. The following procedure must be carefully observed in making these adjustments:

1. Insert the line plug in the electrical outlet. Turn the receiver on by rotating the tone control knob clockwise until the switch is heard to click and then rotate this knob to the extreme clockwise position. Wait about a minute for the tubes to warm up. Turn the wave-band switch to the broadcast position, clockwise. Turn the volume control clockwise to about half of its full rotation.

2. Select six nearby stations desired for automatic tuning. Choose one of these stations and any button to be adjusted for it. Find the station call letters on one of the four cards supplied in an envelope with the receiver. Push out the circular tab bearing the station call letters from the card and press it in the depression in the front face of the push-button. Insert one of the clear celluloid discs, which are supplied in a separate envelope, over the station tab in the push-button. Press this disc in firmly. See Fig. 4.

3. Push in the manual selector knob (second from right). When pushing in the selector knob or one of the push-buttons best results are obtained by using a firm rapid action.

4. With the selector knob depressed tune in the desired station. Rotate the selector knob until the mark on the dial face corresponding approximately to the frequency of the station appears at the black indicator line on the conical escutcheon window. Identify the station and note the approximate position of the dial face.

5. Push in the button to be adjusted for this station. See Fig. 1.

6. Insert a small thin coin in one of the slots of the adjusting button immediately below the push-button. Turn the adjusting button until the mark on the dial face corresponding approximately to the frequency of the station again appears at the black indicator line on the conical escutcheon window. Once the station is heard, tune it in carefully by turning the adjusting button back and forth slowly. From the standpoint of performance it is of paramount importance to tune in the station accurately. See Fig. 2.

7. It is very important, when tuning in a station by means of the adjusting button, that the last turning motion of the adjusting button be in the counter-clockwise direction, as indicated in Fig. 3.

8. Check the results by moving the dial face, using the selector knob, to a different position and then pushing in the button. The station should be received clearly and with maximum volume.

9. Adjust the remaining buttons, one at a time, following the procedure outlined above.

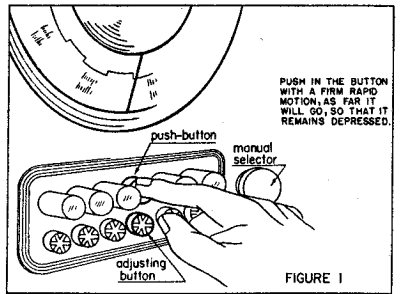

FIGURE 1

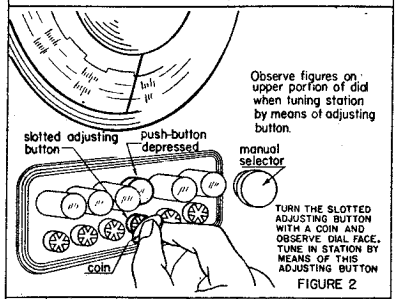

FIGURE 2

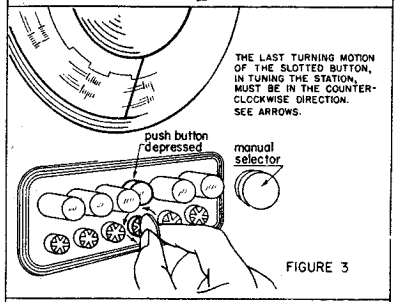

FIGURE 3

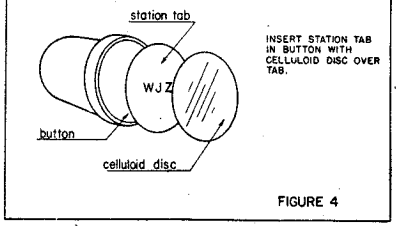

FIGURE 4

EMERSON RADIO & PHONO CORP.

MODEL BR226, Chassis BR
MODEL BS227, Chassis BS
Schematic, Voltage

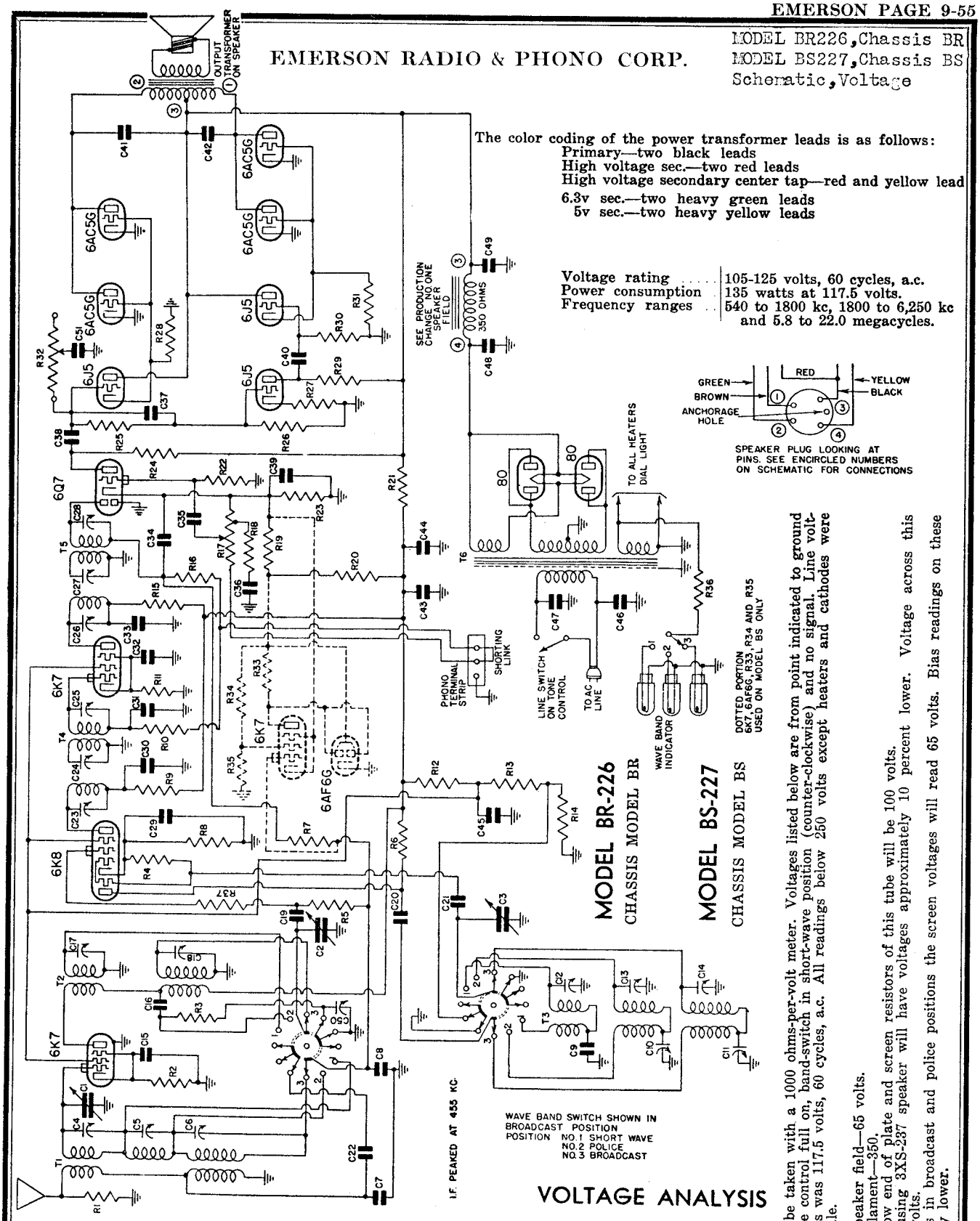

The color coding of the power transformer leads is as follows:
Primary—two black leads
High voltage sec.—two red leads
High voltage secondary center tap—red and yellow lead
6.3v sec.—two heavy green leads
5v sec.—two heavy yellow leads

Voltage rating	105-125 volts, 60 cycles, a.c.
Power consumption	135 watts at 117.5 volts.
Frequency ranges	540 to 1800 kc, 1800 to 6,250 kc and 5.8 to 22.0 megacycles.

VOLTAGE ANALYSIS

Tube	*Plate*	*Screen*	*Osc. Plate*	*Cathode*	*Fil.*
6K7 r-f amplifier	230	‡100	—	5	6.3 a.c.
6K8 oscillator-modulator	225	‡100	100	4.2	6.3 a.c.
6K7 i-f amplifier	215	‡100	—	4.5	6.3 a.c.
6Q7 diode detector, a.v.c. first audio	130	—	—	2.1	6.3 a.c.
6J5 phase inverter	130	—	—	4.2	6.3 a.c.
6J5 first audio driver	280	—	—	9	6.3 a.c.
6J5 inverted audio driver	280	—	—	9	6.3 a.c.
4—6AC5G's output	275	—	—	0	6.3 a.c.
6K7 electron-ray control (BS only)	*5	*5	—	2.1	6.3 a.c.

†Readings should be taken with a 1000 ohms-per-volt meter. Voltages listed below are from point indicated to ground (chassis) with volume control full on, band-switch in short-wave position (counter-clockwise) and no signal. Line voltage for these readings was 117.5 volts, 60 cycles, a.c. All readings below 250 volts except heaters and cathodes were taken on 250 volt scale.

Voltage across speaker field—65 volts.
Voltage at 80 filament—350.
*Readings taken at low end of plate and screen resistors of this tube will be 100 volts.
†Model BR chasses using 3XS-237 speaker will have voltages approximately 10 percent lower. Voltage across this speaker field is 80 volts.
‡When band-switch is in broadcast and police positions the screen voltages will read 65 volts. Bias readings on these tubes will be slightly lower.

©John F. Rider, Publisher

©John F. Rider, Publisher

ADJUSTMENTS

An oscillator with frequencies of 455, 600, 1600, 1800, 6000 and 20,000 kc should be used.

An output meter should be used across the voice coil or speaker output transformer for observing maximum response.

Use a dummy antenna for aligning any of the three bands. A .0002 mf condenser may be used for broadcast band dummy antenna, a .0001 mf condenser for the police band dummy antenna and a 400 ohm non-inductive resistor for the short-wave band dummy antenna.

Always use as weak a test signal as possible during alignment.

The set's oscillator is higher in frequency than the signal on *all three bands*, so images should be observed on the low frequency side of the signals.

Always choose the minimum capacity peak on oscillator trimmers and maximum capacity peaks on antenna trimmers. The last motion in adjusting trimmers should always be a tightening one, *not* a loosening one.

Never leave a trimmer with the outside plate so loose that there is no tension on the screw. Either bend the plate up or remove the screw entirely. Loose screws are a sure source of noise, drifting, and microphonism.

In aligning antenna trimmers on the high-frequency signals there is always a tendency for the oscillator to drift, due to interlocking. To compensate for this always keep tuning the variable condenser as the trimmers are being adjusted.

Location of Coils and Trimmer Adjustments

The i-f transformers are located at the back of the chassis. The first i-f transformer is the one near the electrolytic condenser. The six trimmers for i-f alignment are available through holes in the tops of the cans.

The antenna coils for the three bands are wound on one form located on the front wall of the chassis with the trimmers accessible through holes in the chassis. The right-hand trimmer is for the broadcast band, the left-hand trimmer is for the short-wave band and the central trimmer is for the police band.

The r-f interstage coils are wound on one form and are mounted underneath the chassis to the left of the wave-band switch. The trimmers are available through holes in the top of the chassis. The trimmer closest to the front of the chassis is for the broadcast band. The trimmer farthest from the front is for the short-wave band. The central trimmer is for compensating the short-wave band at 6 mc.

The oscillator coils are wound on one form and mounted underneath the chassis directly behind the wave-band switch. The trimmers are accessible through holes in the top of the chassis. The trimmer closest to the band-switch is for the broadcast band, the trimmer farthest from the band-switch is for the short-wave band and the central trimmer is for the police band.

The oscillator series padder for the broadcast and police bands are mounted underneath the chassis near the interstage coils. The adjusting screws are available through holes in the top of the chassis. The padder nearest the front of chassis is for the police band. The padder for the short-wave band is a fixed mica condenser, C9 on the schematic diagram. If this condenser is to be replaced use a condenser with a value within 2% of that specified.

I-f Alignment

Set the wave-band switch at the broadcast (clockwise) position, and the variable condenser at minimum capacity. Feed 455 kc to the grid of the 6K7 i-f amplifier tube through a .02 mf condenser. (Do not remove the grid clip from the tube.) Examine the trimmer screws and locate the screw which is painted red. Screw this trimmer down as far as it will go. Adjust the other two trimmers for maximum response and then adjust the red trimmer for maximum response. Do not readjust the other two trimmers. Now feed 455 kc to the grid of the 6K8 tube and repeat same procedure on the first i-f transformer. Do not touch the adjustment of the second i-f transformer. Failure to follow this procedure may result in impairment of the fidelity of the receiver.

Broadcast Alignment

Since the indicator is fastened to the cabinet, a piece of stiff wire should be fastened to the dial drive assembly-plate and bent over to form an indicator when the chassis is removed from the cabinet. Set indicator at extreme low frequency end of dial with condenser closed.

Set the wave-band switch at the broadcast (clockwise) position, and the dial at 60. Feed 600 kc to the antenna (using a standard dummy antenna) and adjust the broadcast-band series padder for maximum response. Move the dial to 160, feed 1600 kc and adjust the oscillator coil trimmer for maximum response, then adjust the interstage and antenna coil trimmers for maximum response. Reset the dial at 60, feed 600 kc and rock the variable condenser while adjusting the series padder for maximum response. Return to 1600 and check alignment. If readjustment is necessary return to 600 and repeat entire procedure.

Police Alignment

Set the wave-band switch at the police-band (central) position and the dial at 1.8. Feed 1800 kc to the antenna (using a .0001 mf dummy antenna) and adjust the police-band series padder for maximum response. Move the dial to 6.0, feed 6000 kc and adjust the oscillator trimmer for maximum response. Then adjust the antenna trimmer for maximum response. Note the interstage coil on this band has no trimmer adjustment. Return the dial to 1.8, feed 1800 kc to the antenna and rock the variable condenser while readjusting the series padder for maximum response. Return to 6000 kc and check alignment. If readjustment is necessary return to 1800 kc and repeat entire procedure.

Short-Wave Alignment

Set the wave-band switch at the short-wave (counter-clockwise) position. Move the dial to 20 and feed 20,000 kc to the antenna (using a 400 ohm dummy antenna) and adjust the short-wave oscillator trimmer for maximum response. If two peaks are obtained choose the minimum capacity peak. Then adjust the interstage and antenna coil trimmers for maximum response. If two peaks are obtained choose the maximum capacity peak. Move the dial to 6 mc, feed 6000 kc to the antenna and adjust the r-f interstage trimmer (central trimmer at left of band-switch) for maximum response.

TUBE DATA — Models BR and BS

1—6K7, R-f amplifier (behind right-hand section of variable condenser).
1—6K8, Triode-hexode, oscillator-modulator (behind left-hand section of variable condenser).
1—6K7, I-f amplifier (between the two i-f transformers).
1—6Q7, Diode detector, audio amplifier, a.v.c. (left rear corner of chassis).
1—6I5, Phase inverter (left side of chassis, third from rear).
2—6I5, Second audio amplifiers (left side of chassis, second from rear, and right side of chassis beside electrolytic condensers).
4—6AC5G, Dynamic coupled, power output (two are in front of power transformer; other two are alongside power transformer near variable condenser).
2—80, Rectifiers (beside power transformer, at rear of chassis).

MODEL BS HAS IN ADDITION TO ABOVE TUBES:

1—6K7, Electron-ray indicator control (left side of chassis, fourth from rear).
1—6AF6G, Electron-ray tuning indicator (on cable socket).

BR-BS-S1

*Item	Part No.	DESCRIPTION	Price
T1	4BT-396	Three-band antenna coil	$2.05
T2	4BT-397	Three-band interstage coil	1.80
T3	5RT-447	Three-band oscillator coil	1.75
T4	5RT-441	Triple-tuned 455 kc first i-f transformer	1.75
T5	5RT-442	Triple-tuned 455 kc second i-f transformer	1.75
T6	5ST-440	Power transformer	6.95
R1	LR-64	5000 ohm ¼ watt carbon resistor	.16
R2	5RR-339	710 ohm ½ watt wire-wound resistor	.16
R3	LR-60	20,000 ohm ¼ watt carbon resistor	.16
R4, R26, R29	KR-53	50,000 ohm ¼ watt carbon resistor	.16
R5, R33	KR-57	1 megohm ¼ watt carbon resistor	.16
R6	BR-12	25,000 ohm 1 watt carbon resistor	.16
R7, R10, R22, R35	HR-42	2 megohm ¼ watt carbon resistor	.16
R8	3CR-295	410 ohm ½ watt wire-wound resistor	.16
R9, R15	GR-85	2000 ohm ¼ watt carbon resistor	.16
R11	4ER-286	510 ohm ½ watt wire-wound resistor	.16
R12	5RR-338	13,000 ohm 3 watt carbon resistor	.50
R13	5RR-337	8000 ohm 1 watt carbon resistor	.16
R14	LLR-154	75,000 ohm ¼ watt carbon resistor	.16
R16	KR-55	250,000 ohm ¼ watt carbon resistor	.16
R17	3XR-287	Volume control 500,000 ohms (tapped)	.90
R18	LR-65	10,000 ohm ¼ watt carbon resistor	.16
R19, R20	GR-31	20,000 ohm 1 watt carbon resistor	.16
R21	3XR-283	1500 ohm 2 watt carbon resistor	.28
R23	3VR-268	340 ohm ½ watt wire-wound resistor	.16
R24	KR-54	100,000 ohm ¼ watt carbon resistor	.16
R25, R30	KR-56	500,000 ohm ¼ watt carbon resistor	.16
R27	YR-96	1500 ohm ¼ watt carbon resistor	.16
R28, R31	OR-73	25,000 ohm ¼ watt carbon resistor	.16
R32	3XR-277	Tone control 500,000 ohms with line switch	1.00
R34	NNR-220	3 megohm ¼ watt carbon resistor	.16
R36	4ZR-326	3 ohm ½ watt wire-wound resistor	.16
R37	3ZR-289	210 ohm ½ watt wire-wound resistor	.16
C1, C2, C8	5RC-403	Three-gang variable condenser	5.90
†C4, C5, C6		Trimmers, part of antenna coil assembly.	
C7, C34	4XC-393A	0.00006 mf mica condenser	.20
C8, C30, C33, C38, C40	LC-64	0.05 mf, 400 volt tubular condenser	.20
C9	3EC-267	0.0042 mf mica condenser	.40
C10	2NC-231B	Single adjustable padding condenser: range 750-1500 mmf	.45
C11	2NC-231A	Single adjustable padding condenser: range 300-600 mmf	.30
		IF DUAL PADDING CONDENSER IS USED, ORDER	
	5SC-409	Dual adjustable padding condenser	.95
†C12, C13, C14, C15, C29, C31, C32, C39	AC-6	0.1 mf, 200 volt tubular condenser	.20
C16	LC-65	0.02 mf, 400 volt tubular condenser	.20
C17, C18, C50		Trimmers, part of interstage coil assembly.	
C19	EC-24A	0.0001 mf mica condenser	.20
C20, C22, C51	KC-58	0.01 mf, 400 volt tubular condenser	.20
C21	IIC-133A	0.000025 mf mica condenser	.20
†C23, C24, C25		Trimmers, part of first i-f transformer.	
†C26, C27, C28		Trimmers, part of second i-f transformer.	
C35	LLC-150	0.004 mf, 600 volt tubular condenser	.20
C36	BC-12	0.05 mf, 200 volt tubular condenser	.20
C37	4VC-371A	0.0003 mf mica condenser	.20
C41, C42	3HC-274	0.002 mf, 600 volt tubular condenser	.20
C43, C45	EEC-132A	0.1 mf, 400 volt tubular condenser	.20
C44	3SC-303	40 mf, 375 volt wet electrolytic condenser	1.70
C46, C47	3LC-297A	0.01 mf, 400 volt molded condenser	.20
C48, C49	3XC-329	30 mf, 450 volt wet electrolytic condenser	1.35
	3XS-237	12" dynamic speaker (for 224 and 226 cabinets)	13.45
	5SS-342	10" dynamic speaker (for 227 cabinet)	10.15
	5SS-341	Wave-band switch	2.45
	4BL-94	Pilot light, 6.3 volt, .25 amp. Mazda No. 44	.20
	4YZ-844	Conical escutcheon and crystal	1.90
	4VZ-763A	Celluloid push-button caps (set of 6)	.05
	5BZ-835	Push-buttons	.06
	5QF-13	Adjusting buttons	.05
	4VZ-725	Station name-tab cards (per set)	.65
	5QE-2	Escutcheon for push-buttons	.15
	5RM-400	Six-button mechanical tuning mechanism (complete with variable condenser)	13.75
	5SE-13	Wave-band indicator and escutcheon (BS only)	.25
	5SD-53	Conical dial face	1.70
	5SE-4	Escutcheon for electron-ray tuning indicator	.05
	5SW-119	Electron-ray tube socket and cable assembly (BS only)	.65
	5QM-391	Push-button background plate	.30

WHEN ORDERING REPLACEMENT PARTS, SPECIFY PART NUMBERS

*Item number locates the article on schematic diagram.

†These trimmers are part of coil assemblies and cannot be supplied separately.

List Prices as Effective as of Aug. 1st, 1938 (Subject to change without notice)

FOR ADJUSTMENT OF "INSTAMATIC"-TUNING PUSH-BUTTONS—SEE MODEL BQ-225

In replacing chassis in cabinet do not tighten mounting screws so much that chassis will not float freely, and do not allow any part of the dial assembly to touch the cabinet. Do not push control knobs on so far that they touch the cabinet front panel. If these precautions are not observed the receiver may become microphonic.

FADA RADIO & ELECTRIC CORP.

MODELS 20,20A,20T
Schematic,Coils
Parts

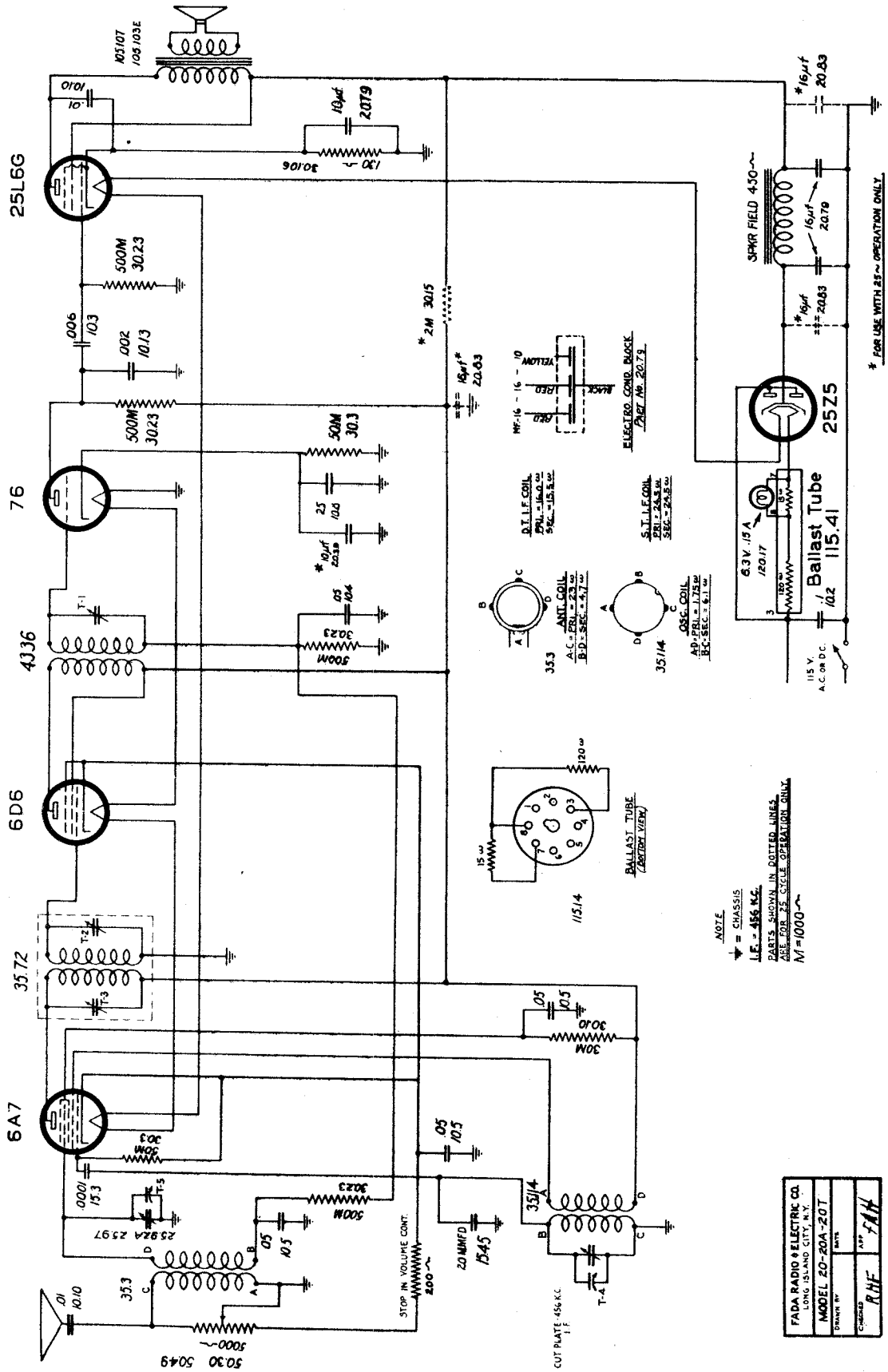

©John F. Rider, Publisher

CONTINUITY AND VOLTAGE READINGS ON

MODEL 250 SERIES

Line Voltage 117 A.C. - Input Current .52 Amp.

No signal input — Volume control - Max.

TYPE OF TUBE	POSITION OF TUBE	PLATE VOLTS	PLATE MA CURRENT	CATHODE VOLTS	SCREEN GRID VOLTS
6A7	1st Detector	214	3.8	2.5	92
	Oscillator	176	3.4	---	--
6D6	Int. Freq.	214	6.6	3.1	92
76	2nd Detector	98	0.2	9.1	--
6B5	Pwr. Input	214	6.3	---	--
	Pwr. Output	202	27.0	---	--
80	Rectifier	---	52.0 TOTAL	---	--

VOLTAGES ACROSS ELECTROLYTIC CONDENSERS 1st - 305 2nd - 214

These readings were taken with a 1,000 ohm per volt meter and are not indicative of effective voltages.

Above readings taken with a 105.37 speaker in circuit.

Voltage across speaker field - - - - - - - - - - - - - - - - 91 volts

SPEAKER D.C. RESISTANCE VALUES

PART NO.	FIELD COIL	AUDIO TRANS. PRI.	AUDIO TRANS. SEC.	V.C.
105.20	1500*	625*	.8 **	2.0
105.37	1500*	400*	.25**	2.1

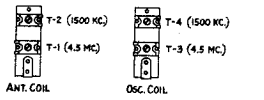

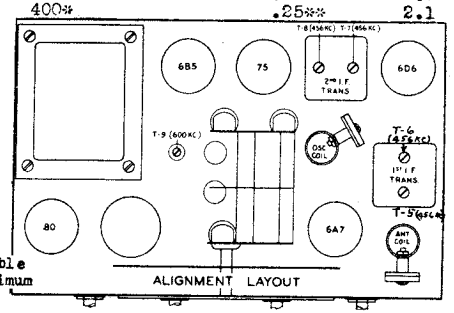

ALIGNMENT TABLE

*To insure perfect alignment, it is necessary to "rock" the ganged variable condenser in order to follow the maximum signal output.

WAVE BAND	DIAL FREQUENCY	GENERATOR FREQUENCY	IMAGE FREQUENCY	DUMMY ANTENNA	GENERATOR CONNECTED TO	ADJUST TRIMMER
B.C.	1000 KC	456 KC	---	.001 mfd. 50,000 ohms	control grid of 6D6 tube	T-7
B.C.	1000 KC	456 KC	---	.001 mfd. 50,000 ohms	control grid of 6A7 tube	T-6,T-5
S.W.	4.5 MC	4.5 MC	3.6 MC	400 ohm resistor	Yellow antenna lead	T-3,T-1
S.W.	1.8 MC	1.8 MC	---	400 ohm resistor	Yellow antenna lead	Check Sensitivity
B.C.	1500 KC	1500 KC	---	200 mmfd. condenser	Yellow antenna lead	T-4,T-2
B.C.	600 KC	600 KC	---	200 mmfd. condenser	Yellow antenna lead	T-8*

CONTINUITY AND VOLTAGE READINGS ON

MODEL 262 SERIES

Line Voltage 117 A.C. - Input Current .45 Amp.

No signal input — Volume Control Max.

TYPE OF TUBE	POSITION OF TUBE	PLATE VOLTS	PLATE MA CURRENT	CATHODE VOLTS	SCREEN GRID VOLTS
6A8	1st Detector	103	1.2	2.2	52
	Oscillator	93	2.2	---	---
6K7	Int.Freq.	104	7.0	5.5	104
6C5	2nd Detector	37	.05	5.5	---
43	Pwr. Pentode	86	22.0	14.5	90
25Z5	Rectifier	---	75.0 TOTAL	---	---

These readings were taken with a 1,000 ohm per volt meter and are not indicative of effective voltages.

VOLTAGES ACROSS ELECTROLYTIC CONDENSER (PART #20.49)

1st section - 119 2nd section - 104

Voltage across 3,000 ohm speaker field 119 volts
" " 300 " filter choke 15 "

SPEAKER D.C. RESISTANCE VALUES

PART NO.	FIELD COIL	AUDIO TRANS. PRI.	AUDIO TRANS. SEC.	V.C.
105.21	3,000*	340*	.5	3

*These are cold D.C. resistance values.

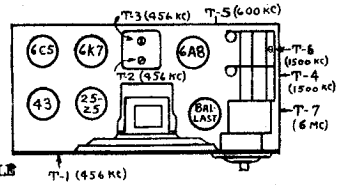

ALIGNMENT LAYOUT

ALIGNMENT TABLE

WAVE BAND	DIAL FREQUENCY	GENERATOR FREQUENCY	IMAGE FREQUENCY	DUMMY ANTENNA	GENERATOR CONNECTED TO	ADJUST TRIMMER
B.C.	1000 KC	456 KC	---	.001 mfd. 50,000 ohms	Control grid of 6A8 tube	T-1,T-2, T-3
B.C.	1500 KC	1500 KC	---	200 mmfd. condenser	Antenna lead	T-4,T-6
B.C.	600 KC	600 KC	---	200 mmfd. condenser	Antenna lead	T-5
S.W.	6 MC	16 MC	5.1 MC	400 ohm resistor	Antenna lead	T-7

Note: Set the dial pointer directly to the last, long line at the right hand side of the dial with the ganged condenser fully meshed.

* To insure perfect alignment it is necessary to "rock" the ganged variable condenser in order to follow the maximum signal output.

©John F. Rider, Publisher

MODELS 272, 273, and 280 SERIES

CONTINUITY AND VOLTAGE READINGS LINE VOLTAGE 117 AC, 0.49 AMPERE

NO SIGNAL INPUT

TYPE OF TUBE	POSITION OF TUBE	PLATE VOLTS	PLATE MA CURRENT	CATHODE VOLTS	SCREEN GRID VOLTS
6A8	1st Detector	111	1.8	1.6	71
	Oscillator	98	2.9	---	---
6K7	Int. Freq.	111	6.6	2.8	111
	2nd Detector	---	---	---	---
6Q7	A.V.C	---	---	---	---
	1st Audio	43	.3	.8	---
6H6	A.V.C.	---	---	---	---
43	Pwr. Pentode	90	21.0	15.5	98
6G5	Flash-o-graph	111	4.8	---	---
25A6	Rectifier	---	98.0 TOTAL	---	---

RECEIVER CURRENT----------45 ma. SPEAKER FIELD CURRENT 53 ma.

These readings were taken with a 1,000 ohm per volt meter and are not indicative of effective voltages.

6G5 used only on 280 SERIES

VOLTAGES ACROSS ELECTROLYTIC CONDENSERS
1st - 126V 2nd - 111V

Voltage across speaker field - 110 Volts
" " filter choke - 15 "

SPEAKER D.C. RESISTANCE VALUES

PART NO.	FIELD COIL	AUDIO TRANS. PRI.	AUDIO TRANS. SEC.	V.C.
105.47	2000*	260*	.3**	2.3
105.48	2000*	250*	.2**	1.8

* These are cold D.C. resistance values.

** This reading includes resistance of hum bucking coil.

ALIGNMENT FOR MODELS 272,272,280,and 281 SERIES

It is important that the proper dummy antenna value, as specified under "DUMMY ANTENNA" in the following table, be connected in series with the high potential side of the signal generator. The .001 mfd. condenser may be a paper tubular (400 volt) type and the 200 mmfd. condenser of mica construction. The 400 ohm and 50,000 ohm resistors should be carbon type (1/3 watt). The receiver ground should remain connected to the low potential side of the signal generator throughout the following adjustments.
For adjusting the I.F. trimmer condensers, the control grid lead should be removed and a 50,000 ohm resistor inserted in series with same. Then connect the high potential lead of the signal generator through the .001 mfd. condenser, directly to the control grid cap of the tube.
Alignment adjustments should be repeated because of possible interaction between circuits.

To determine that the short wave band shunt trimmer condensers have not been adjusted to the image frequency turn the receiver dial to the frequency listed under "IMAGE FREQUENCY", where a signal weaker than the fundamental should be noted, however, if no signal can be heard at this setting even with greater signal generator output, the trimmer has been improperly adjusted and it will be necessary to re-adjust to the proper peak.

Having completed the alignment, tune in a signal at approximately 800 to 900 KC. on Band "C" and note the accuracy of calibration. If a discrepancy of more than 5 KC is noted, shift the dial pointer to the station's frequency.

ALIGNMENT TABLE

WAVE BAND	DIAL FREQUENCY	GENERATOR FREQUENCY	IMAGE FREQUENCY	DUMMY ANTENNA	GENERATOR CONNECTED TO	ADJUST TRIMMER
C	1000 KC	456 KC	---	.001 mfd. 50,000 ohms	Control grid of 6K7 tube	T-1,T-2
C	1000 KC	456 KC	---	.001 mfd. 50,000 ohms	Control grid of 6A8 tube	T-3,T-4
A	15 MC	15 MC	15.9 MC	400 ohm resistor	Yellow antenna lead	T-5,T-6
A	6 MC	6 MC	---	400 ohm resistor	Yellow antenna lead	Check Sensitivity
B	4.5 MC	4.5 MC	3.6 MC	400 ohm resistor	Yellow antenna lead	T-7,T-8
B	1.8 MC	1.8 MC	---	400 ohm resistor	Yellow antenna lead	Check Sensitivity
C	1500 KC	1500 KC	---	200 mmfd. condenser	Yellow antenna lead	T-9,T-10
C	600 KC	600 KC	---	200 mmfd. condenser	Yellow antenna lead	T-11*
D	300 KC	300 KC	---	200 mmfd. condenser	Yellow antenna lead	T-12,T-13
D	150 KC	150 KC	---	200 mmfd. condenser	Yellow antenna lead	T-14*

*To insure perfect alignment it is necessary to "rock" the ganged variable condenser in order to follow the maximum signal output.

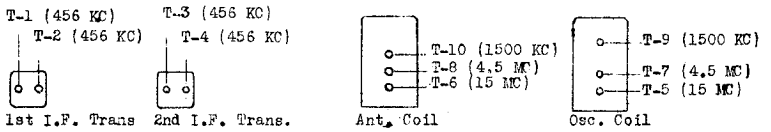

CHASSIS LAYOUT FOR MODELS 272,273,280 and 281 SERIES

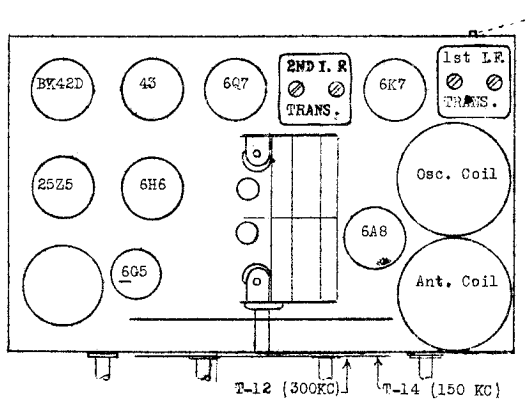

©John F. Rider, Publisher

MODEL 352
Schematic, Coils
Parts

FADA RADIO & ELECTRIC CO

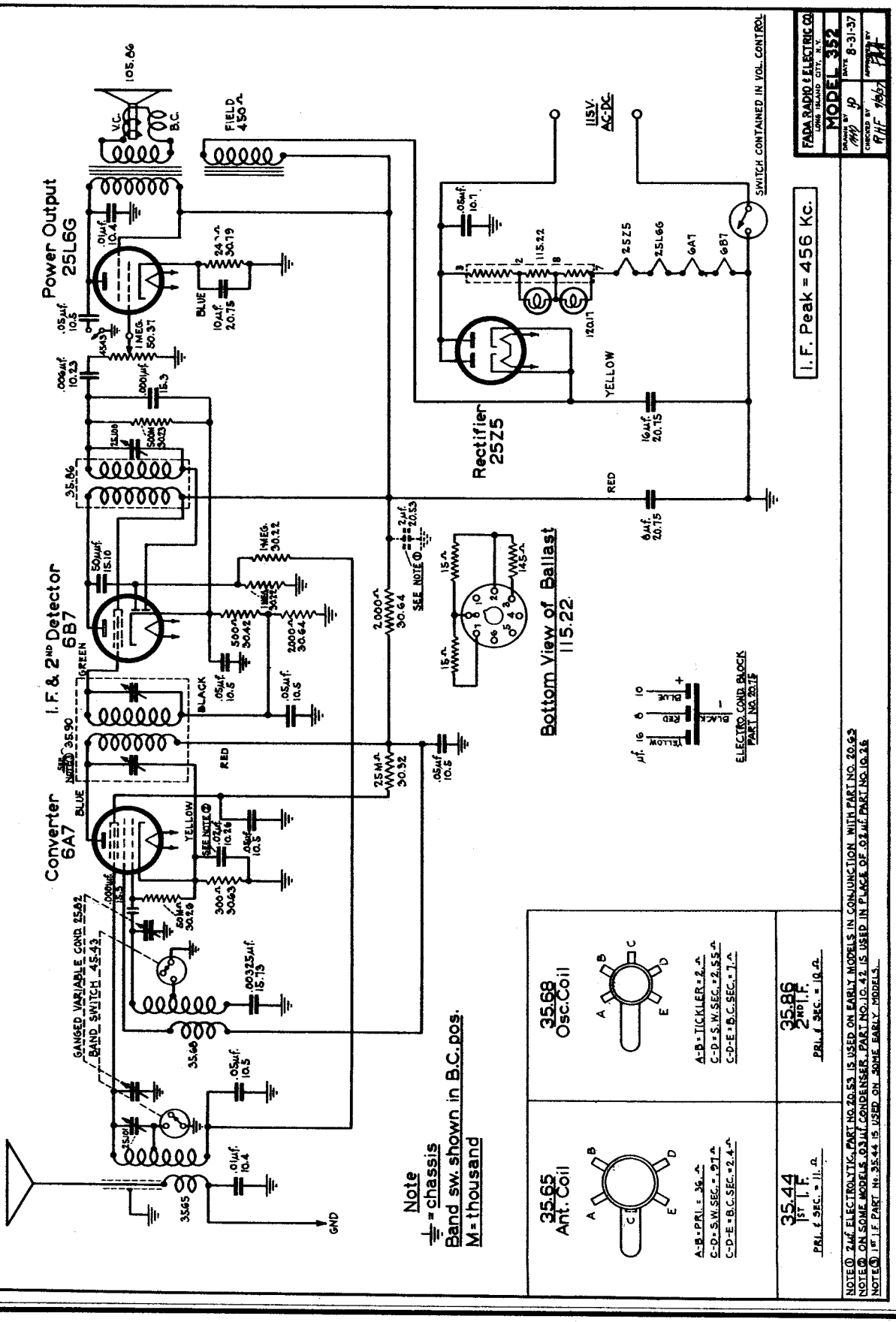

©John F. Rider, Publisher

FADA RADIO & ELECTRIC CORP.

MODEL 360
Schematic, Coils
Parts

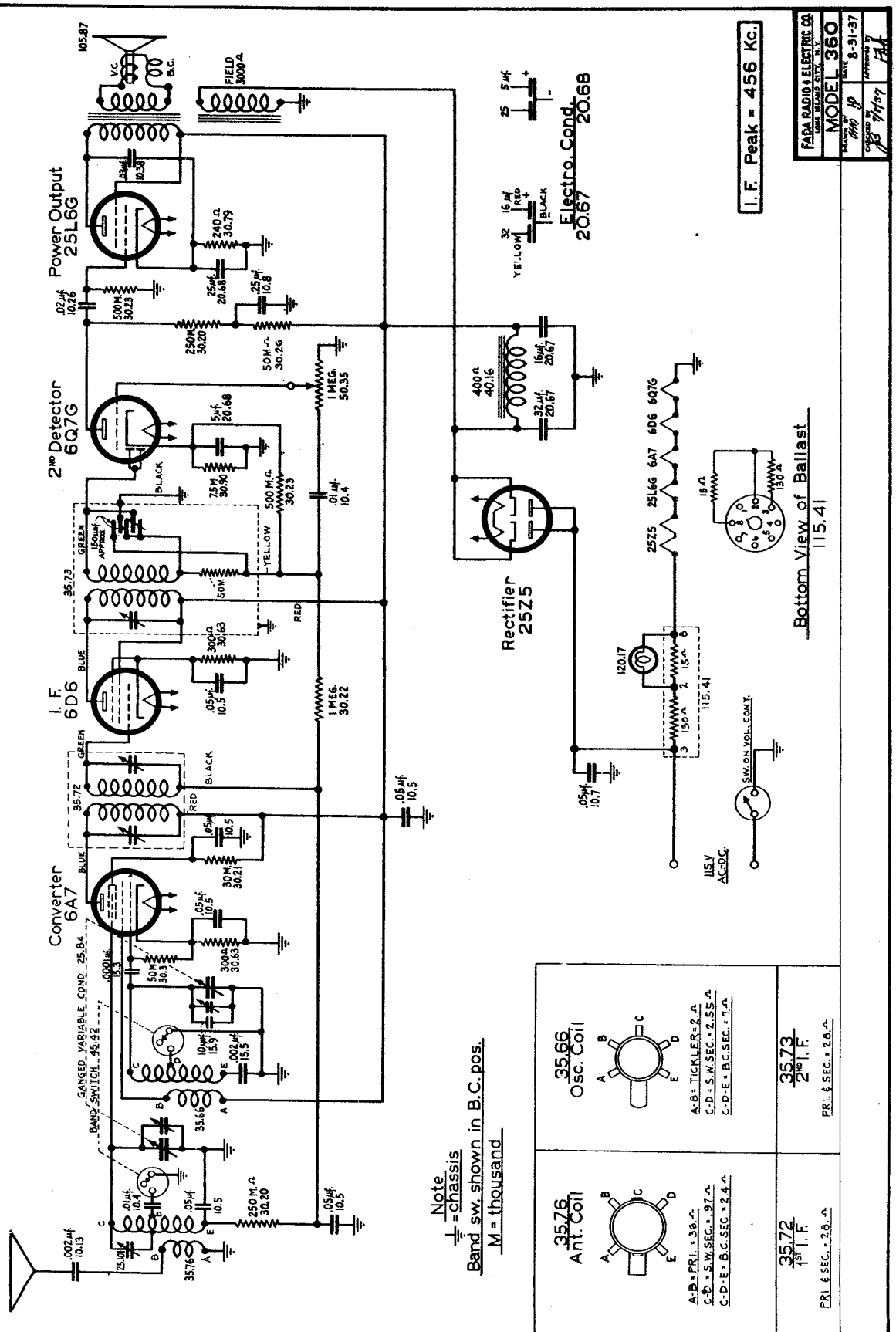

©John F. Rider, Publisher

MODEL 365
Schematic, Coils
Parts

FADA RADIO & ELECTRIC CORP.

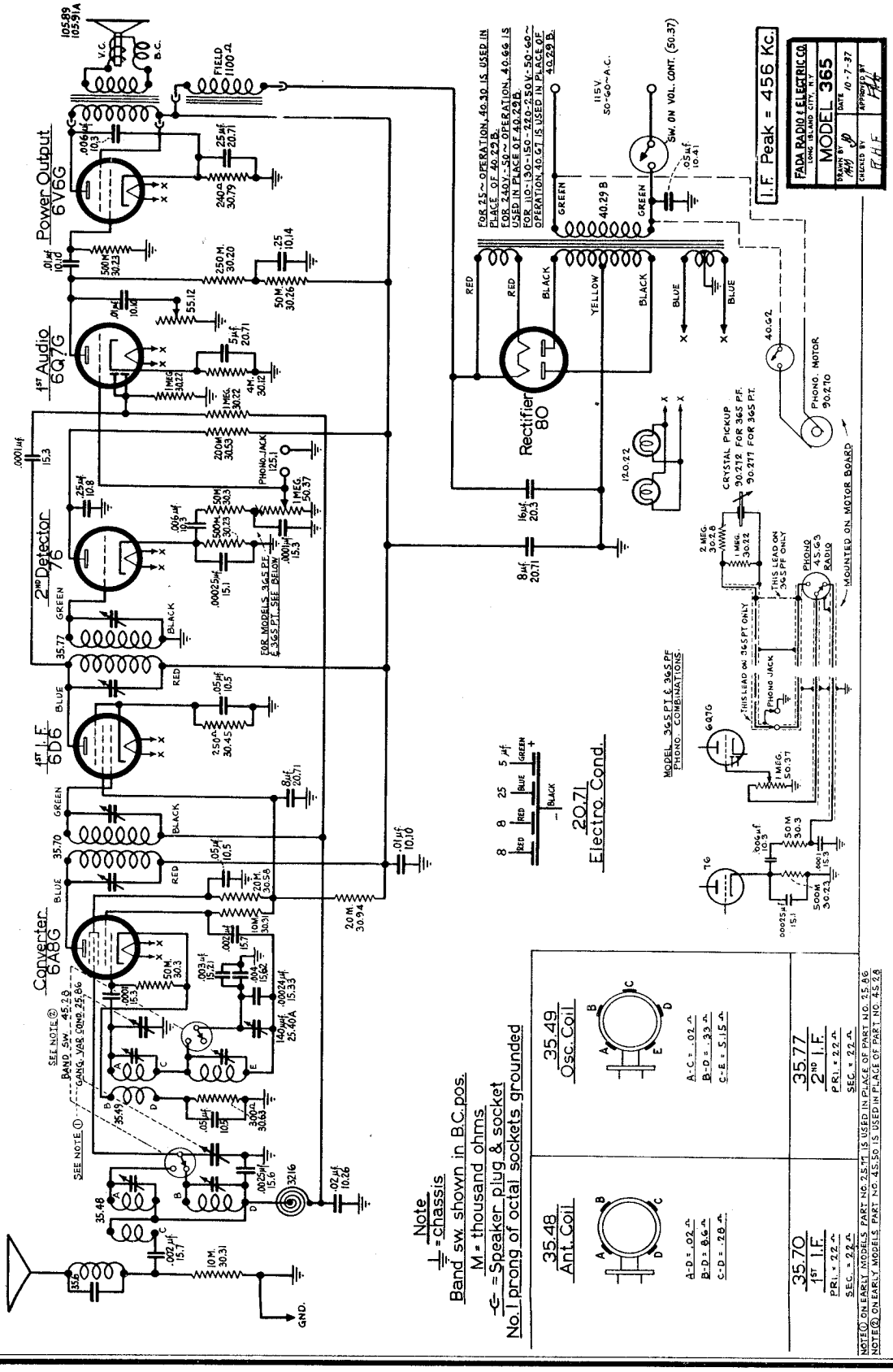

©John F. Rider, Publisher

MODEL 370
Schematic, Coils
Parts

FADA RADIO & ELECTRIC CORP.

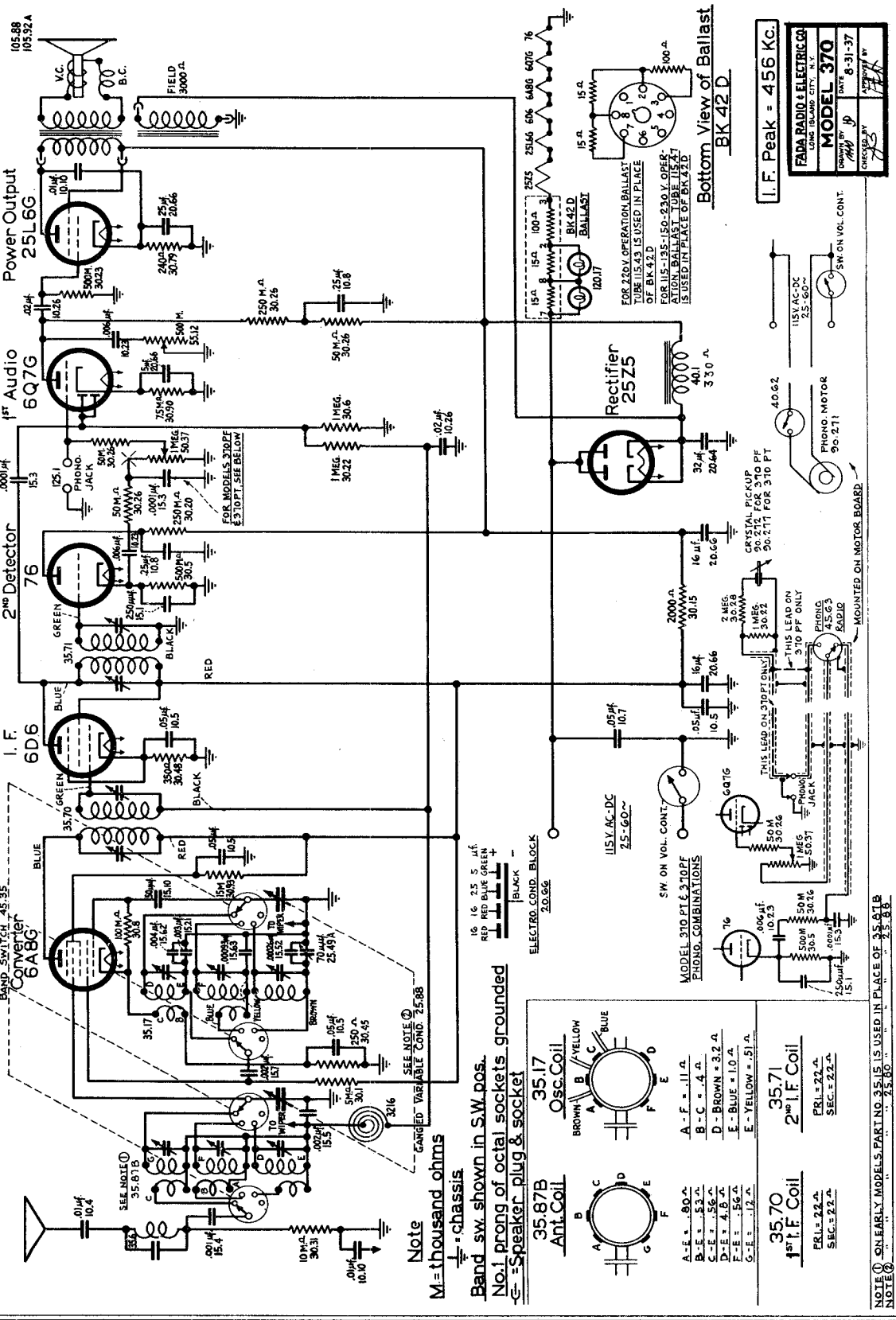

©John F. Rider, Publisher

MODEL 380
Schematic, Coils
Parts

FADA RADIO & ELECTRIC CORP.

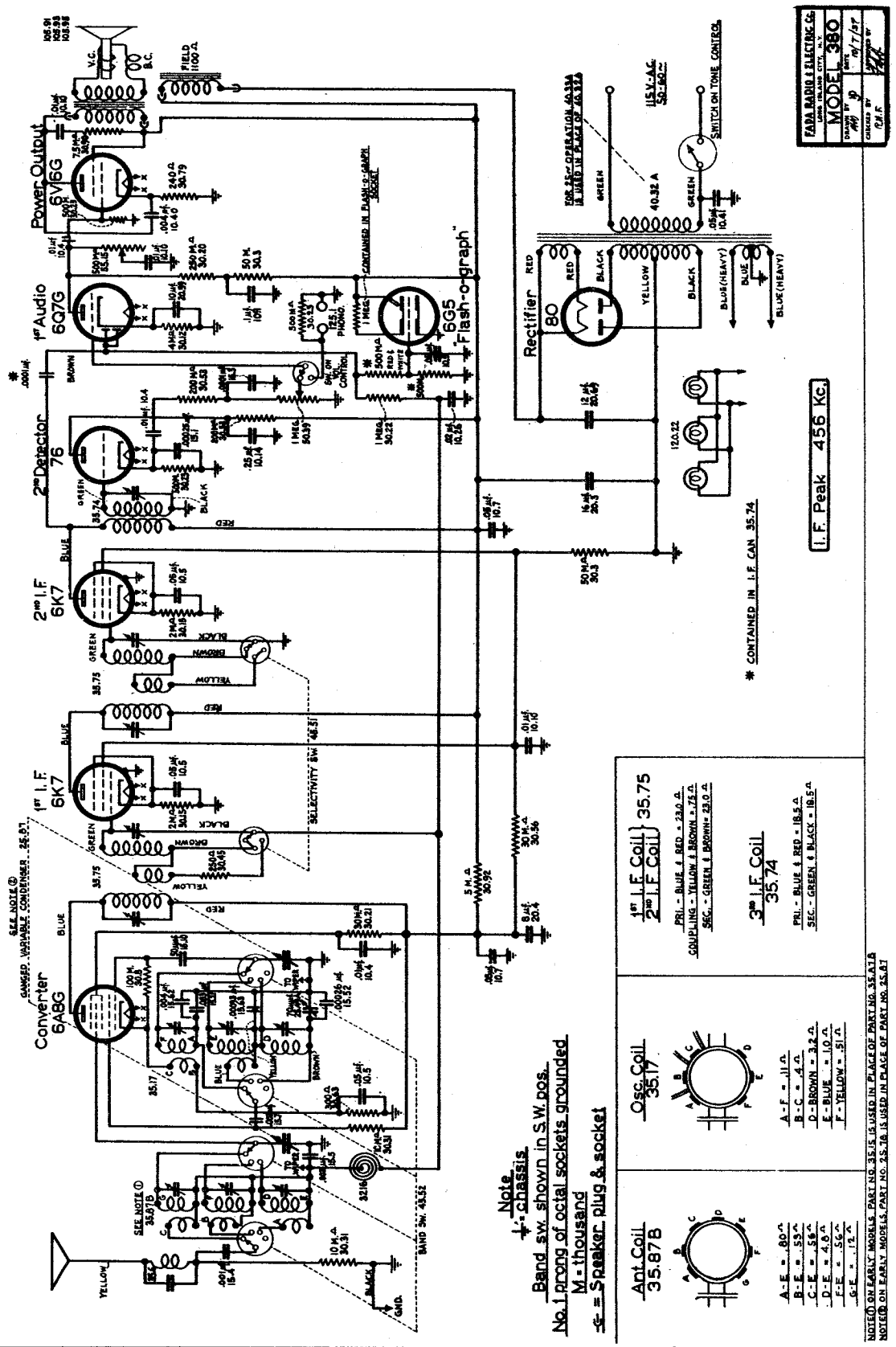

©John F. Rider, Publisher

MODEL 390
Schematic, Coils
Parts

FADA RADIO & ELECTRIC CO

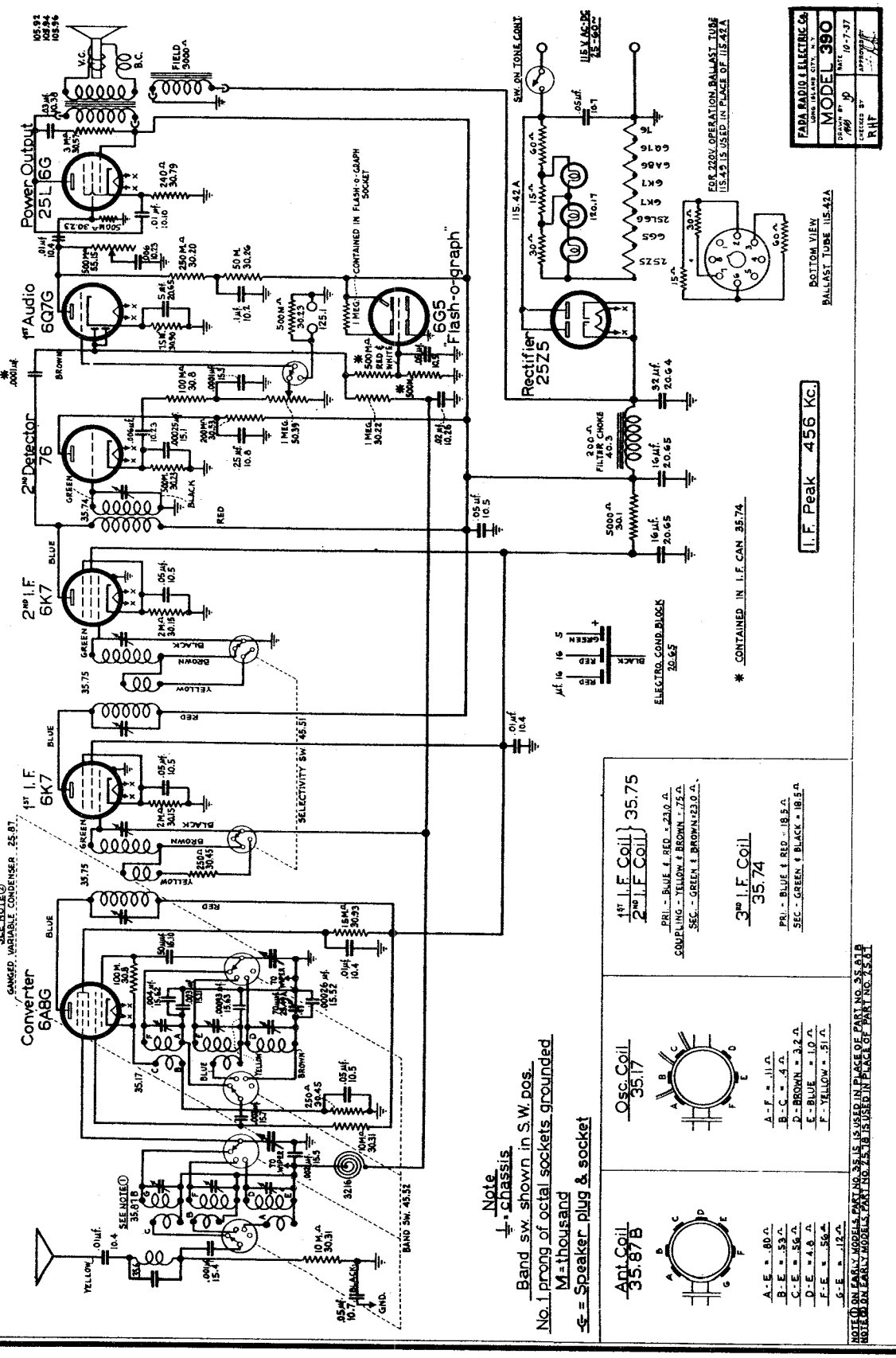

©John F. Rider, Publisher

MODEL 410
Schematic, Socket
Trimmers, Coils, Parts

FADA RADIO & ELECTRIC CO

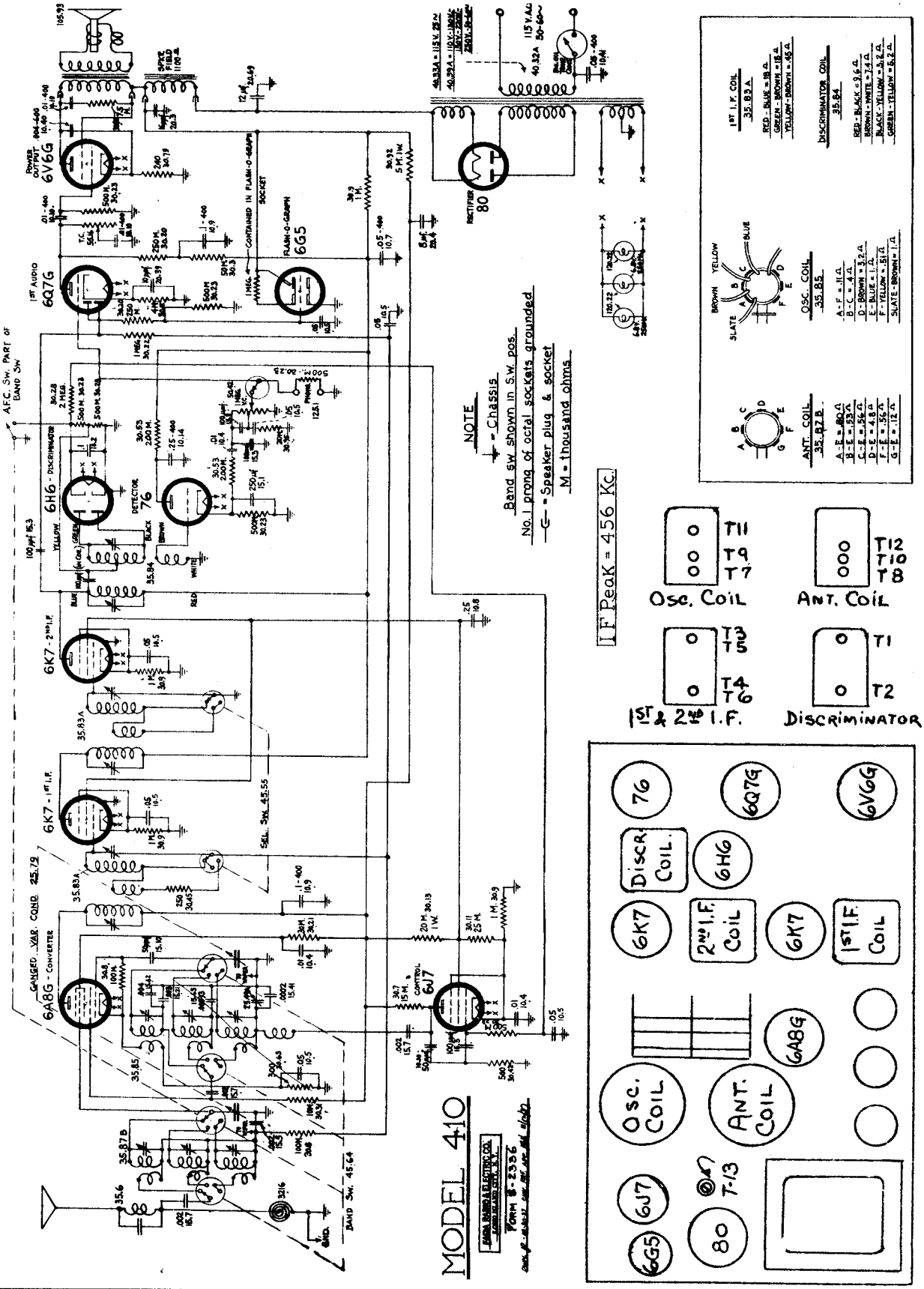

©John F. Rider, Publisher

©John F. Rider, Publisher

ALIGNING INSTRUCTIONS MODEL 413 SERIES MODEL 410 SERIES

In order to adjust accurately the various trimmer condensers of the receiver in accordance with the following instructions, it is essential to use a shielded signal generator capable of giving a modulated carrier which can be attenuated at 456 KC, 600 KC, 1,500 KC, 1.8 MC, 4.5 MC, 6 MC and 15 MC. Besides the standard rectifier-type Output Meter, it will be necessary to use a 6G Microamoter Galvonometer, in aligning the Automatic Frequency Control (AFC) Circuit.

The aligning table, shown below, indicates the sequence of steps necessary to correctly align this receiver. Care should be taken to have the controls in their proper positions.

For adjusting the I.F. trimmer condensers, the control grid lead should be removed and a 50,000 ohm resistor inserted in series with same. Then connect the high potential lead of the signal generator through the .001 mfd. condenser, directly to the control grid cap of the tube.

It is important that the proper dummy antenna value, as specified under "DUMMY ANTENNA", be connected in series with the high potential side of the signal generator. The .001 mfd. condenser may be a paper tubular (400 volt) type and the 200 mmfd. condenser of mica construction. The 400 ohm and 50,000 ohm resistors should be carbon type (1/3 watt). The receiver ground should remain connected to the low potential side of the signal generator throughout the following adjustments.

When adjusting the AFC circuit, the Galvonometer is connected across the two cathode terminals of the 6H6 Discriminator Tube. Adjust the trimmer for Zero Current thru meter. It may be necessary to increase the output of the signal generator considerably to obtain an indication on this meter. The volume control may be retarded to reduce the speaker volume level. Retrimming of the plate circuit of the 2nd I.F. tube is necessary to correct effect of AFC adjustment.
NOTE:- If a Galvonometer is not available, the following method may be used to align the AFC trimmer:- (1) Align complete receiver, omitting AFC adjustment. (2) Loosely couple 456 KC to 6A8G grid, set selectivity switch to "AFC OFF", and manually "tune in" a weak carrier on the BC Band, noting heterodyne beat. (3) Adjust manual control for zero beat. (4) Return selectivity switch to "Sharp" position and adjust trimmer (T-1) for zero beat.

To determine that the short wave band shunt trimmer condensers have not been adjusted to the image frequency turn the receiver dial to the frequency listed under "IMAGE FREQUENCY" where a signal weaker than the fundamental should be noted, however, if no signal can be heard at this setting even with a greater signal generator output, the trimmer has been improperly adjusted and it will be necessary to re-adjust to the proper peak.

The complete alignment adjustments should be repeated because of possible interaction between circuits.

Voltage across speaker field - (1100 ohms) - - - - - - - - - - - - - - - - - -86 volts
" " 5,000 ohm resistor - (#30.92) - - - - - - - - - - - - - - - -80 "

SPEAKER D.C. RESISTANCE VALUES

PART NO.	FIELD COIL	AUDIO TRANS. PRI.	AUDIO TRANS. SEC.	V.C.
105.93	1100*	260*	.8**	2.2

*These are cold D.C. resistance values

**This reading includes resistance of hum bucking coil

CONTINUITY AND VOLTAGE READINGS ON MODEL 413 SERIES

TYPE OF TUBE	POSITION OF TUBE	PLATE VOLTS	PLATE MA CURRENT	CATHODE VOLTS	SCREEN GRID VOLTS
6K7	R.F. Amp.	220	5.8	2.5	87.
6A8G	Converter	220	4.1	2.6	84.
	Oscillator	162	5.2	---	--
6K7	1st I.F.	205	2.0	5.8	87.
6K7	2nd I.F.	205	2.3	5.2	87.
76	2nd Detector	113	.1	15.0	--
6J7	AF Control	191	.9	3.5	87.
6Q7G	1st Audio, AVC	77	.4	1.3	--
76	Phase Inverter	88	2.0	50.0	--
6G5	Flash-o-graph	220	7.5	---	--
6V6G	P. P. Output	221	36.0	14.0	230.
5Z3	Rectifier	---	110.0 TOTAL	---	--

These readings were taken with a 1,000 ohm per volt meter and are not indicative of effective voltages.

VOLTAGES ACROSS ELECTROLYTIC CONDENSERS Line voltage 115 A.C. - Input watts - 96

PART NO.	1ST SECTION	2ND SECTION	
20.3	330	200	(No signal input)
20.4	246	220	

Voltage across speaker field - 84 volts

SPEAKER D.C. RESISTANCE VALUES

PART NO.	FIELD COIL	AUDIO TRANS. PRI.	AUDIO TRANS. SEC.	V.C.
105.98	800*	275* TOTAL	.20**	2.0

*These are cold D.C. resistance values

** This reading includes resistance of hum bucking coil

CONTINUITY AND VOLTAGE READINGS ON MODEL 410 SERIES

TYPE OF TUBE	POSITION OF TUBE	PLATE VOLTS	PLATE MA CURRENT	CATHODE VOLTS	SCREEN GRID VOLTS
6A8G	Converter	175	3.8	2.8	97
	Oscillator	141	4.0	---	--
6K7	1st I.F.	250	3.1	3.9	80
6K7	2nd I.F.	250	3.1	3.9	80
76	2nd Detector	125	.1	13.0	--
6J7	AF Control	150	.6	3.25	80
6Q7G	1st Audio, AVC	75	.5	1.4	--
6G5	Flash-o-graph	175	3.9	---	--
6V6G	Audio Output	230	44.0	12.1	243
80	Rectifier	---	76.0 TOTAL	---	--

These readings were taken with a 1,000 ohm per volt meter and are not indicative of effective voltages.

VOLTAGES ACROSS ELECTROLYTIC CONDENSERS

1st SECTION	2nd SECTION	3rd SECTION	
348	255	175	Line voltage 115 A.C. - Input watts - 79

MODEL 413
Schematic, Socket
Trimmers, Coils, Parts

FADA RADIO & ELECTRIC CORP.

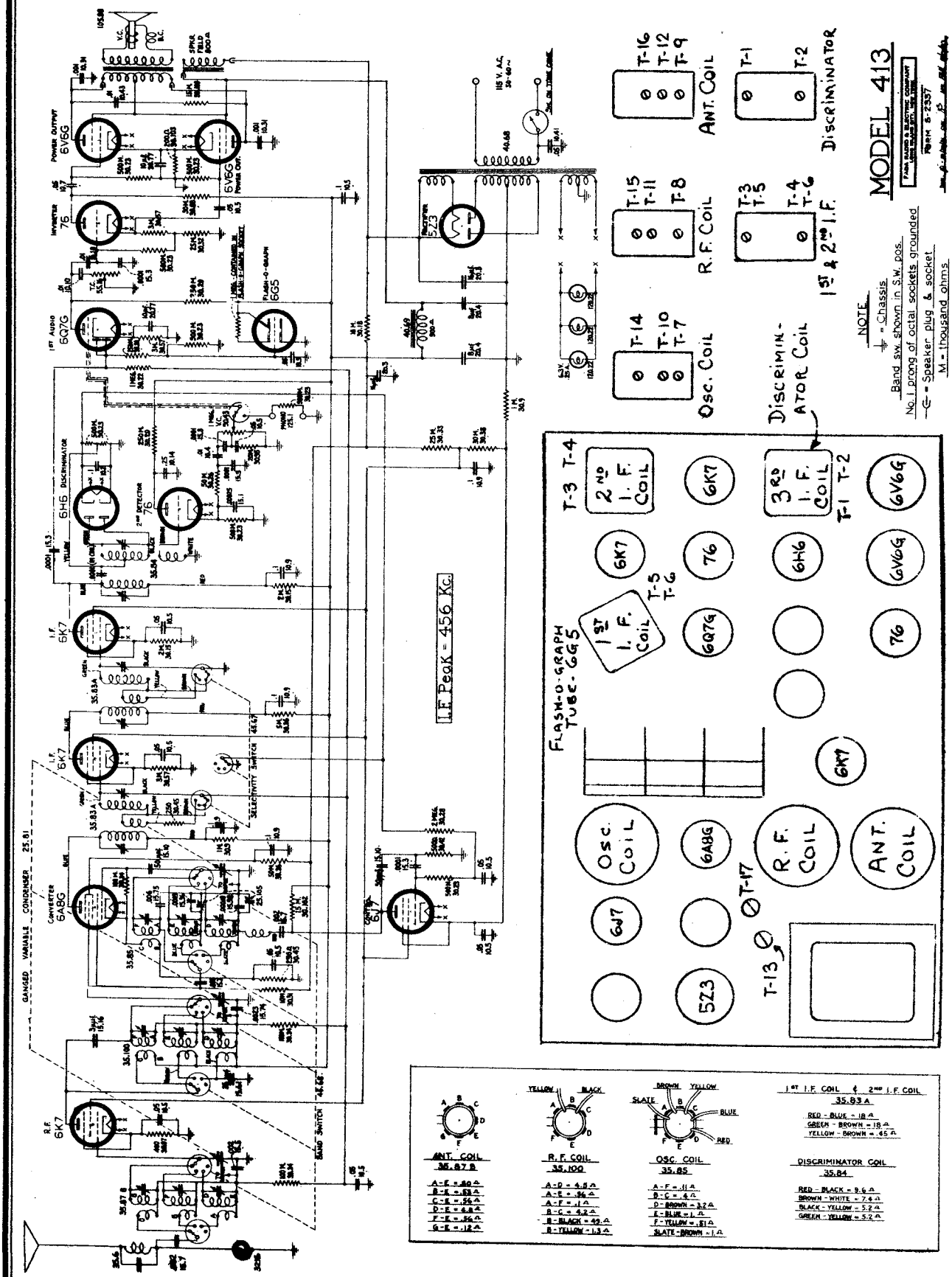

©John F. Rider, Publisher

FADA RADIO & ELECTRIC CORP.

MODEL 410
MODEL 413
Alignment Tables

MODEL 410 SERIES ALIGNMENT TABLE

WAVE BAND	DIAL FREQUENCY	GENERATOR FREQUENCY	IMAGE FREQUENCY	DUMMY ANTENNA	GENERATOR CONNECTED TO	ADJUST TRIMMER
A.F.C. OFF	1000 KC	456 KC	---	.001 mfd. 50,000 ohms	Control grid 1st 6K7 tube	T-1,T-2, T-3,T-4
A.F.C. OFF	1000 KC	456 KC	---	.001 mfd. 50,000 ohms	Control grid of 6A8G tube	T-5,T-6
B.C.	1000 KC	456 KC	---	.001 mfd. 50,000 ohms	Control grid of 6A8G tube	T-1*
A.F.C. OFF	1000 KC	456 KC	---	.001 mfd. 50,000 ohms	Control grid of 6A8G tube	T-2
S.W.	15 MC	15 MC	15.9 MC	400 ohm resistor	Yellow ant. lead	T-7,T-8
S.W.	6 MC	6 MC	---	400 ohm resistor	Yellow ant. lead	Check Tracking
POL	4.5 MC	4.5 MC	3.6 MC	400 ohm resistor	Yellow ant. lead	T-9,T-10
POL	1.8 MC	1.8 MC	---	400 ohm resistor	Yellow ant. lead	Check Tracking
B.C.	1500 KC	1500 KC	---	200 mmfd. condenser	Yellow ant. lead	T-11, T-12
B.C.	600 KC	600 KC	---	200 mmfd. condenser	Yellow ant. lead	T-13*

MODEL 413 SERIES ALIGNMENT TABLE

WAVE BAND	DIAL FREQUENCY	GENERATOR FREQUENCY	SELECT. SWITCH	IMAGE FREQUENCY	DUMMY ANTENNA	GENERATOR CONNECTED TO	ADJUST TRIMMER
B.C.	1000 KC	456 KC	AFC off	---	.001 mfd. 50,000 ohms	Control grid 1st 6K7 tube	T-1,T-2, T-3,T-4
B.C.	1000 KC	456 KC	AFC OFF	---	.001 mfd. 50,000 ohms	Control grid of 6A8G tube	T-5,T-6
B.C.	1000 KC	456 KC	SHARP	---	.001 mfd. 50,000 ohms	Control grid of 6A8G tube	T-1*
B.C.	1000 KC	456 KC	AFC OFF	---	.001 mfd. 50,000 ohms	Control grid of 6A8G tube	T-2
S.W.	15 MC	15 MC	SHARP	15.9 MC	400 ohm resistor	Yellow ant. lead	T-7,T-8 T-9
S.W.	6 MC	6 MC	SHARP	---	400 ohm resistor	Yellow ant. lead	Check Tracking
POL	4.5 MC	4.5 MC	SHARP	3.6 MC	400 ohm resistor	Yellow ant. lead	T-10, T-11,T-12
POL	1.8 MC	1.8 MC	SHARP	---	400 ohm resistor	Yellow ant. lead	T-13**
B.C.	1500 KC	1500 KC	SHARP	---	200 mmfd. condenser	Yellow ant. lead	T-14,T-15 T-16
B.C.	600 KC	600 KC	SHARP	---	200 mmfd. condenser	Yellow ant. lead	T-17**

*Automatic Frequency Control Adjustmeht.

** To insure perfect alignment it is necessary to "rock" the ganged variable condenser in order to follow the maximum signal output.

©John F. Rider, Publisher

MODEL 450
MODEL 5F60
Schematics, Coils
Parts

FADA RADIO & ELECTRIC CORP.

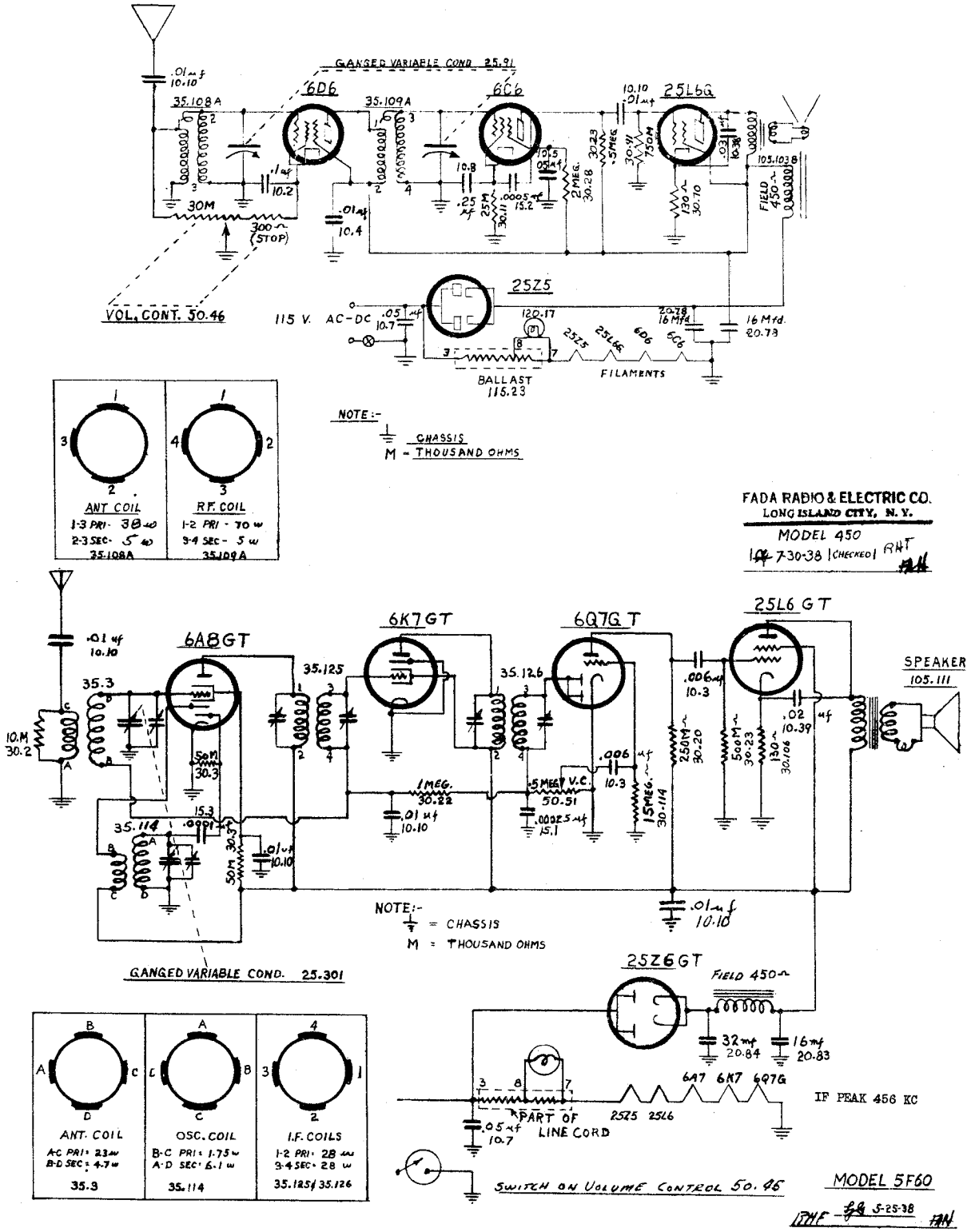

©John F. Rider, Publisher

MODEL 451
Schematic, Coils
Parts

FADA RADIO & ELECTRIC CORP.

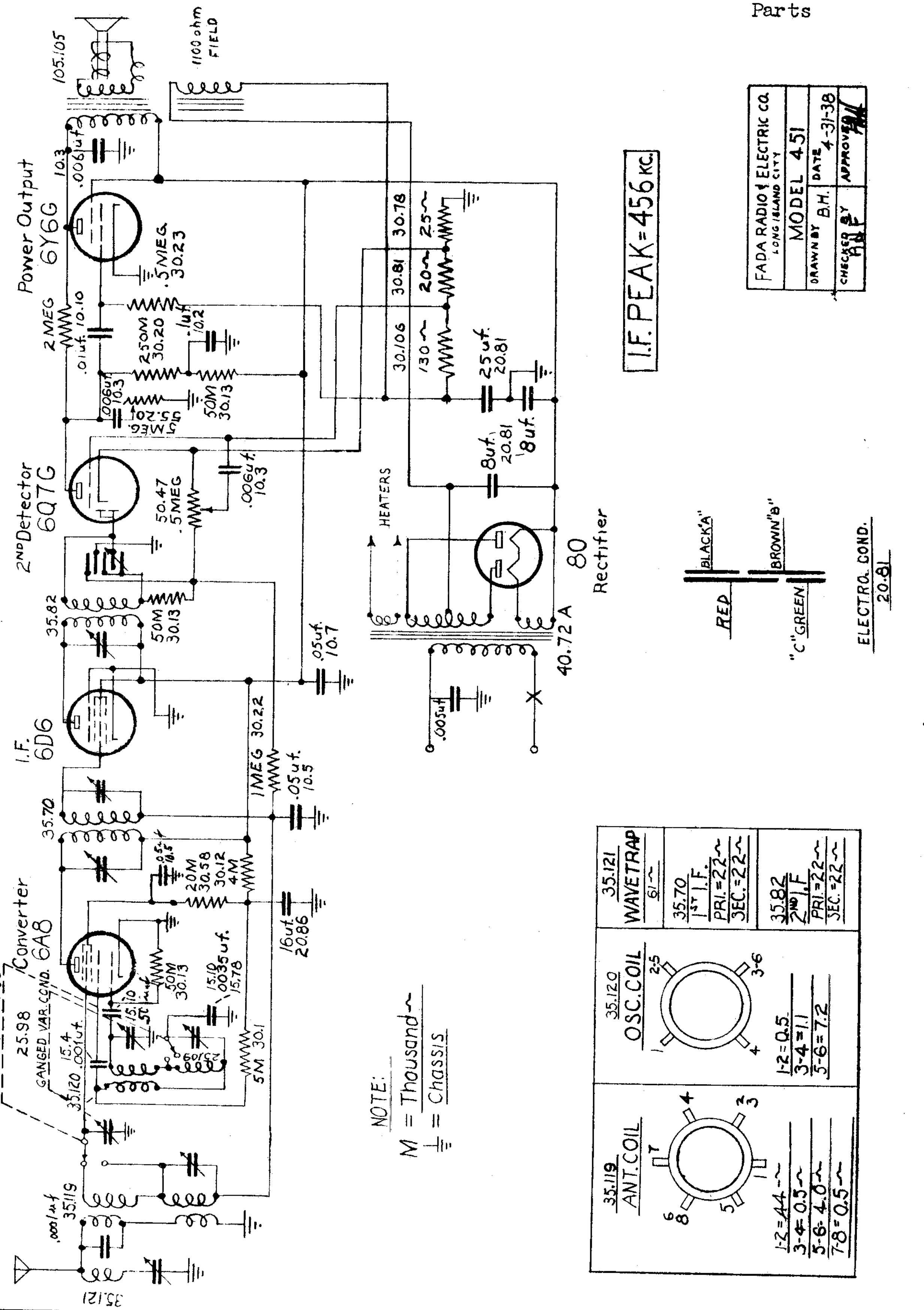

©John F. Rider, Publisher

MODEL 454
Schematic, Coils
Parts

FADA RADIO & ELECTRIC CORP.

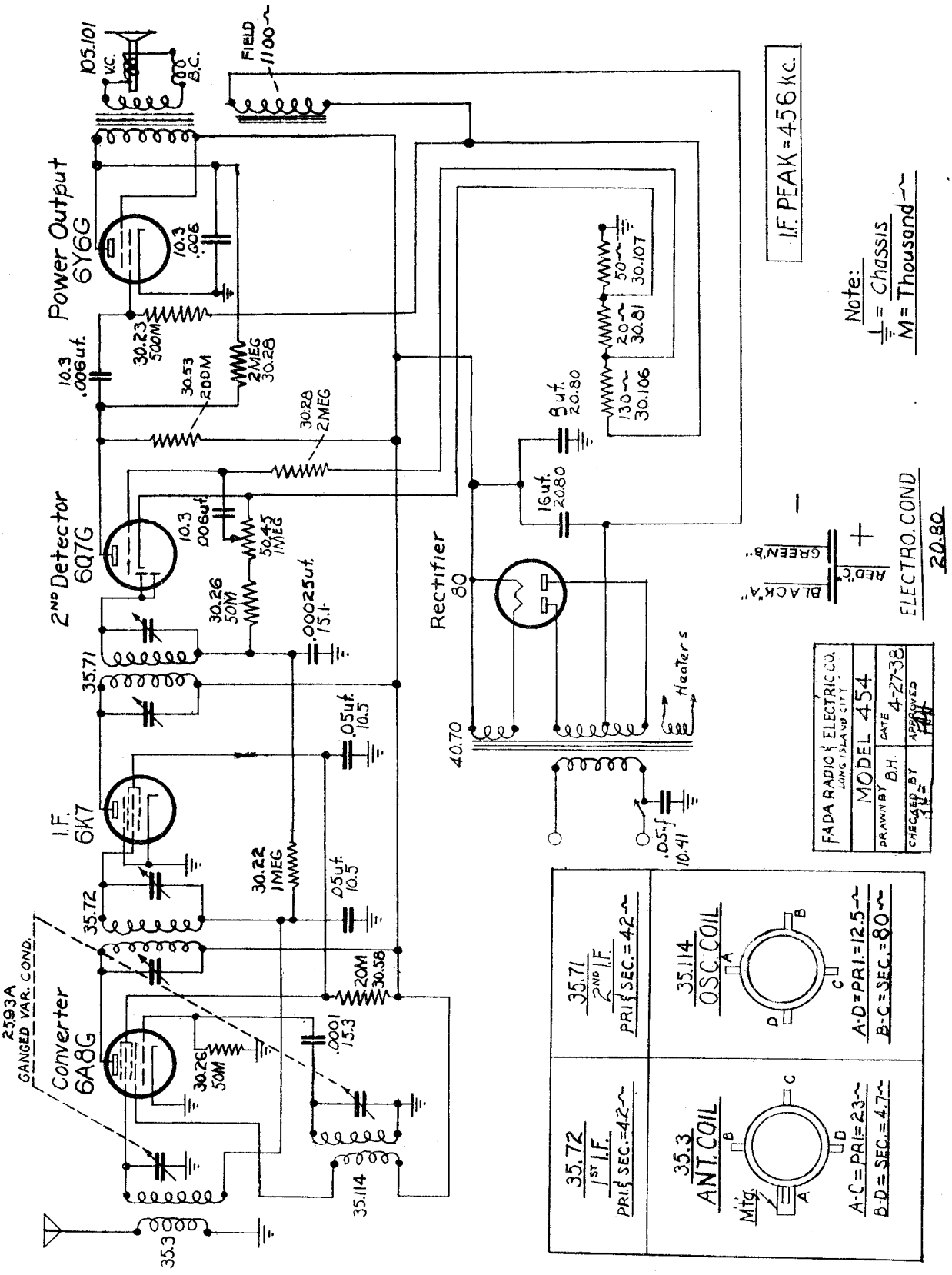

©John F. Rider, Publisher

FADA RADIO & ELECTRIC CORP.

MODEL 460
Schematic, Coils
Parts

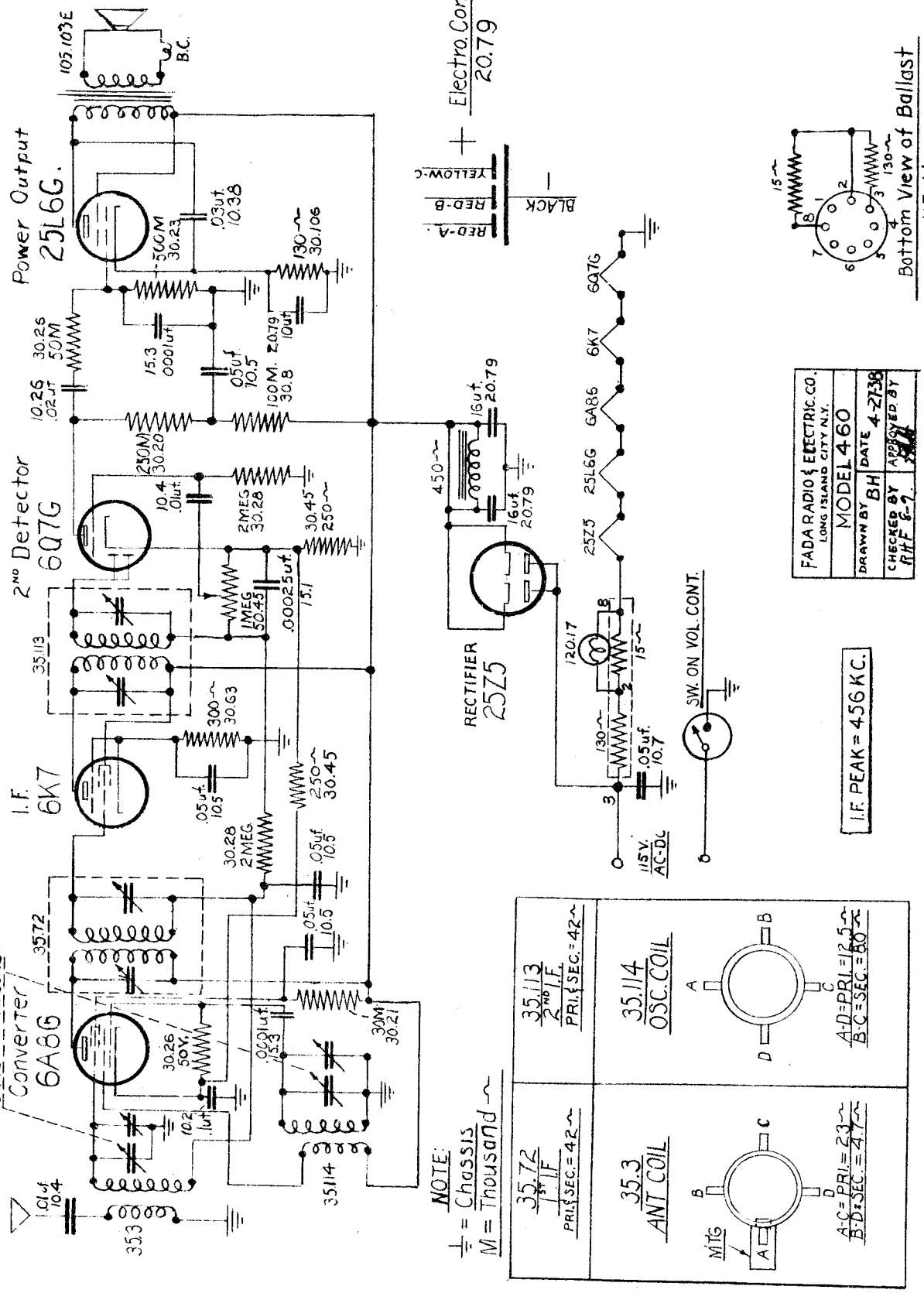

©John F. Rider, Publisher

MODEL 461
Schematic, Coils
Parts

FADA RADIO & ELECTRIC CORP.

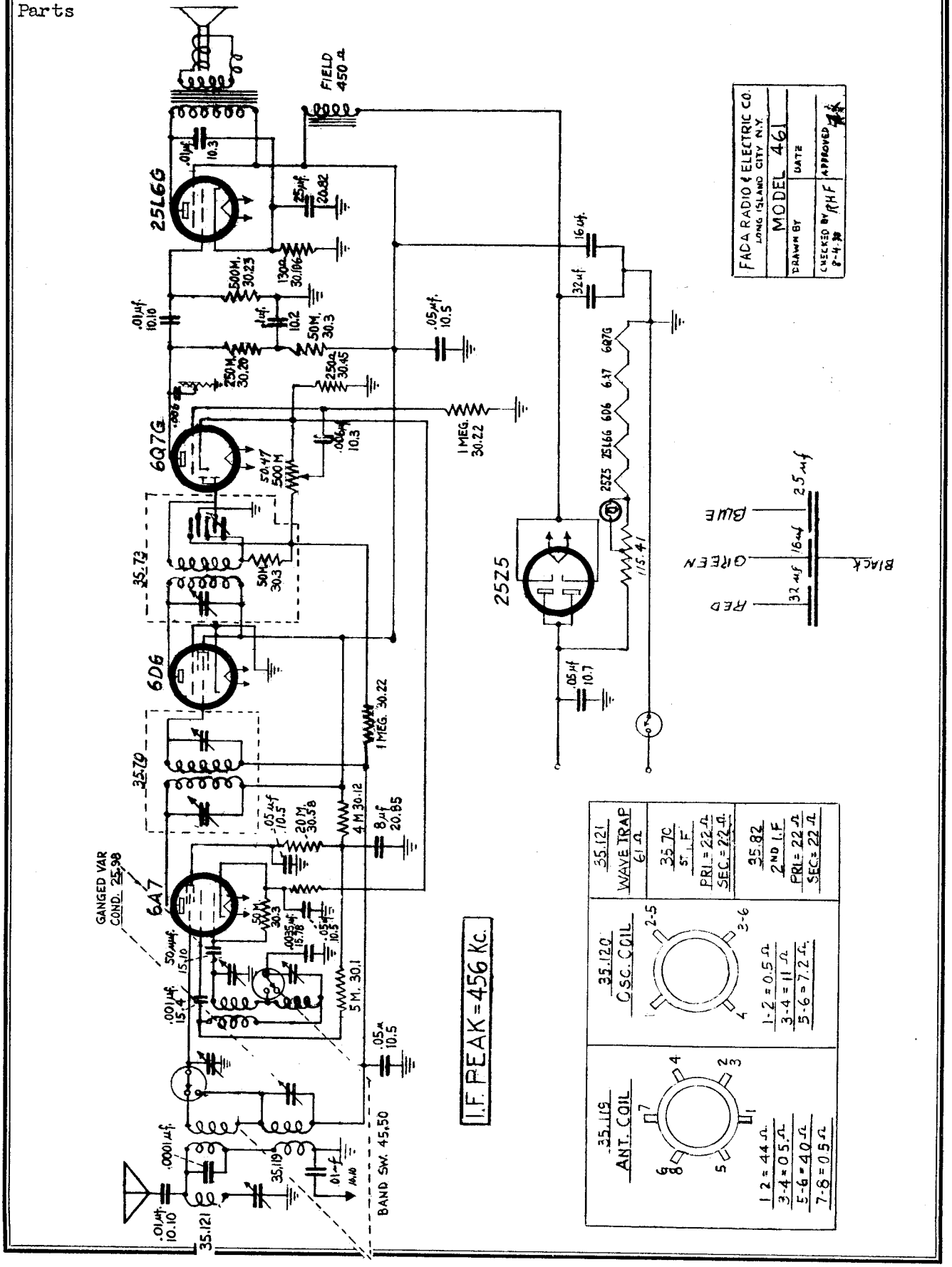

©John F. Rider, Publisher

©John F. Rider, Publisher

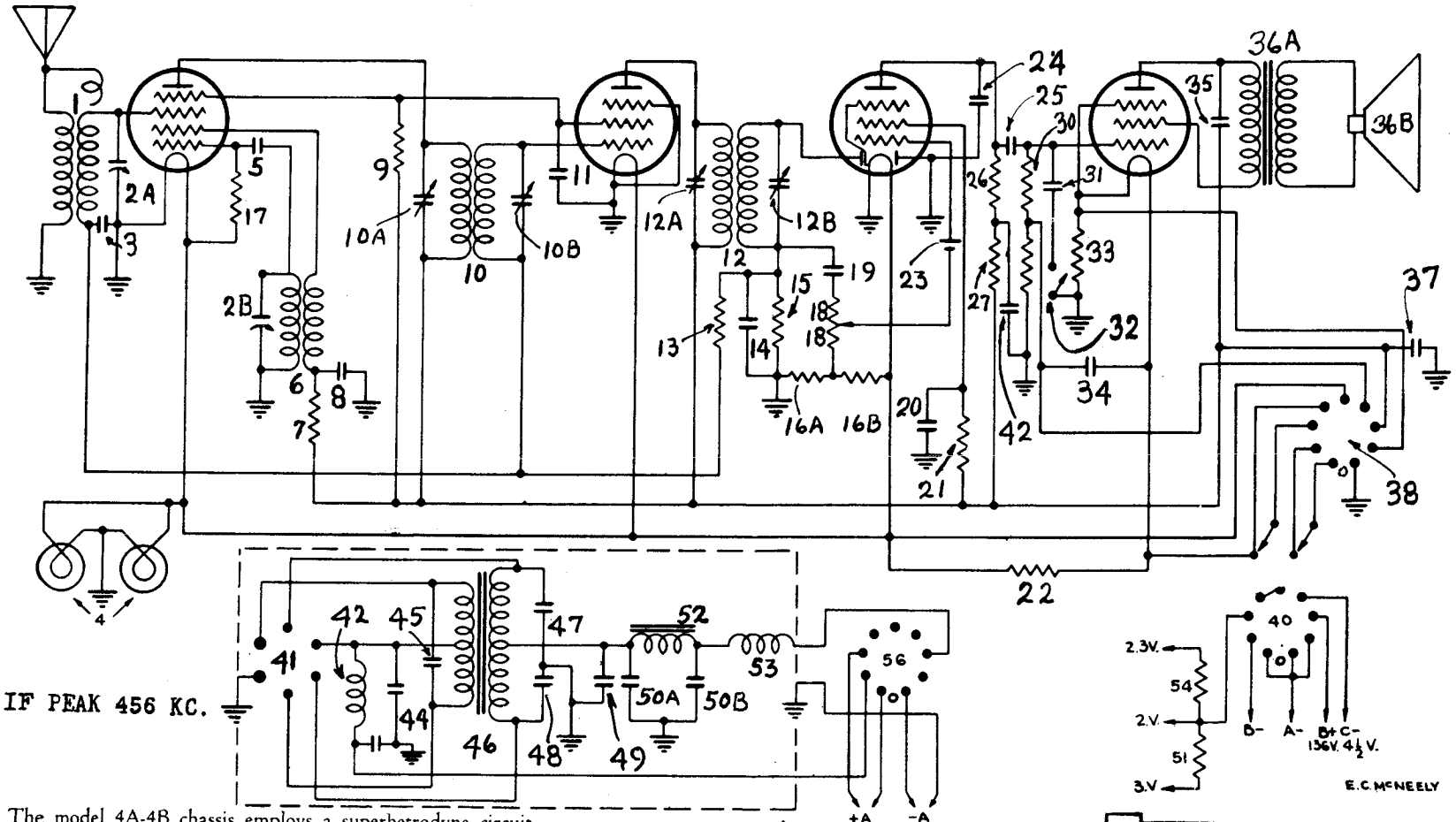

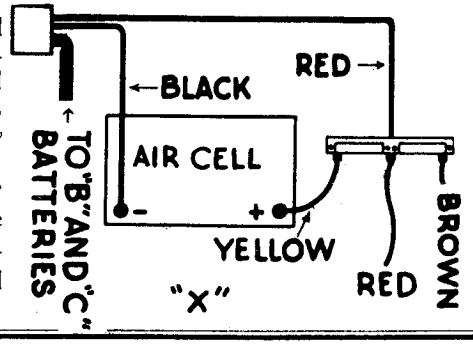

The model 4A-4B chassis employs a superhetrodyne circuit with automatic volume control (Figure 2). The receiver operates equally well on a six-volt storage battery or on any of the conventional A, B and C battery arrangements (Figure 1). New high-gain, octal-base tubes are used (Figures 3 and 5), making possible a receiver of high sensitivity with low battery drain.

On six-volt operation the current consumption is only approximately 1.3 amperes. As a two-volt receiver the "A" and "B" currents are approximately .55 amperes and 20 milliamperes respectivelv.

In order to make interchangeability as simple as possible, a nine-prong socket and plug power connection is employed (Figure 2). Only part of these prongs are used on either battery arrangement. A careful study of the circuit diagram should be made before any attempt is made to replace defective parts in the receiver, since the purpose of the various connections may not be readily apparent from a chassis inspection alone.

Four Standard Battery Plugs will be found on the battery cable. Three of these are identical to each other and are to be plugged into the Standard Receptacles on the three "B" batteries. The remaining plug, the one with one large prong, should be plugged into the "C" battery.

MODELS 4A,4B
Socket,Trimmers
Alignment,Voltage
Resistance

FAIRBANKS, MORSE & CO.

ALIGNMENT

Alignment procedure is given below in chart form (Figure 4). Make adjustments in the order given. Any low range AC voltmeter, preferably about 0-15 volts, may be used for an output meter. It should be connected from the plate of the 1F5G tube to ground with a .1 mfd. condenser in series with one of the leads. The volume control should be set at maximum during the alignment and the output from the signal generator should be decreased as the meter hand tends to go off scale. If too strong a signal is used and the volume control is used to keep the hand on scale, the A.V.C. will operate and inaccurate alignment will result.

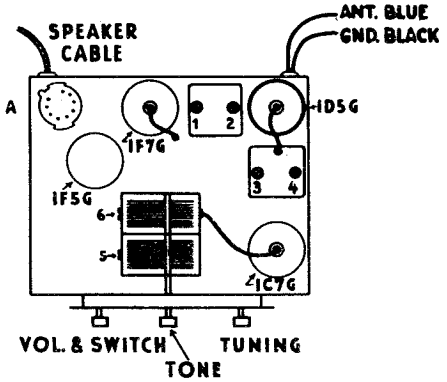

FIGURE 3
TOP VIEW OF 4A AND 4B CHASSIS

No.	Connect Generator To	Dummy	Generator Frequency	Band Switch Setting	Dial Setting	Stage	Trimmer No.	AFC Switch	Adjust For	Special Instrs.
1	Grid of 1C7G	.1 mfd. Condenser	456 KC		550 KC	2nd IF	1		Max.	
2	Grid of 1C7G	.1 mfd. Condenser	456 KC		550 KC	2nd IF	2		Max.	
3	Grid of 1C7G	.1 mfd. Condenser	456 KC		550 KC	1st IF	3		Max.	
4	Grid of 1C7G	.1 mfd. Condenser	456 KC		550 KC	1st IF	4		Max.	
5	Antenna Lead	200 mmfd. Cond. Mica	1500 KC		1500 KC	Osc.	5		Max.	
6	Antenna Lead	200 mmfd. Cond. Mica	1500 KC		1500 KC	Det.	6		Max.	

FIGURE 4
ALIGNMENT PROCEDURE CHART

OHMS	VOLTS	1C7G	VOLTS	OHMS
1MEG	50		5,5	55M
1MEG	135		75	1MEG
.6	2		0	1MEG
			0	0

OHMS	VOLTS	1D5G	VOLTS	OHMS
1 MEG	50			
1 MEG	140		0	1 MEG
.6	2		0	0

OHMS	VOLTS	1F7G	VOLTS	OHMS
0	0		.35	500M
1MEG	8		20	2MEG
.6	2		0	1MEG
			0	0

OHMS	VOLTS	1F5G	VOLTS	OHMS
1MEG	140		0	500M
1MEG	135			
7	6		4	10

OHMS	VOLTS	POWER PLUG	VOLTS	OHMS
0	0		6	7
10	4		6	7
1MEG	140		6	7
20M	0		6	7
			2	1.5

FIGURE 5
VOLTAGE AND RESISTANCE ANALYSIS CHART MODEL 4B

©John F. Rider, Publisher

FAIRBANKS, MORSE & CO.

PARTS AND PRICE LIST MODELS 4A AND 4B

Part Number	Reference Figure 2	Description	List Price
800-1	23	Bias Cell	$ .20
40-2		Cabinet—Console (C1B)	
41-1		Cabinet—Table (T5-B)	
480-1	40	Cable—Battery (4A) with plugs	2.00
480-2	56	Cable Assembly—Battery (4B)	1.50
501-1	1	Coil Assembly—Antenna	1.20
503-1	6	Coil Assembly—Oscillator	.90
202-1	2 A & B	Condenser—Tuning (2 gang)	2.50
250-8	35	Condenser—.003-600 Paper	.18
250-11	31	Condenser—.006-600 Paper	.18
250-12	19, 25	Condenser—.01-400 Paper	.18
250-39	28, 20	Condenser—.05-200 Paper	.18
250-21	11, 8, 3	Condenser—.1-200 Paper	.18
250-27	37	Condenser—.25-200 Paper	.20
250-40	34	Condenser—.5-150 Paper	.25
260-10	24, 14	Condenser—.00025 Mica	.18
260-18	5	Condenser—.001 Mica	.18
340-1	18	Control—Volume and Switch	1.00
381-1	32	Control—Switch—Tone	.35
64-1		Crystal—Pyralin	.50
150-1		Dial Drive Bushing—Brass	.15
151-1		Dial Drive Shaft—Steel	.15
7476-1		Dial Drive Spring Washer	.02
7475-1		Dial Drive "C" Washer	.01
611-1		Dial Reflector	.60
465-1		Dial Light Socket (Screw Type)	.10
805-1	4	Dial Light—2V—60 Ma.	.25
125-1		Dial Drive Pulley	.30
8036-1		Dial Drive Cord	.05
127-1		Dial Cord Spring	.03
601-1		Dial Scale—Celluloid	.60
7381-1		Dial Scale Split Rivets Doz.	.05
602-1		Dial Pointer (Push on)	.10
801-5		Grid Clips—Tube	.02
700-2		Grommets—½" Rubber	.01
700-1		Grommets—Rubber	.02
70-1		Knob—Bakelite	.15
460-1	38	Receptacle for Battery Cable	.25

Part Number	Reference Figure 2	Description	List Price
335-1	33	Resistor—.33 ohm ½ watt	$ .15
336-1	16 A & B	Resistor—50-100 ohms Tapped	.25
335-2	54	Resistor—.53 ohms ½ watt	.25
335-3	51	Resistor—1.65 ohms ½ watt	.25
338-1	22	Resistor—11 ohms 2 watt	.25
301-21	29, 7	Resistor—22,000 ohms ½ watt	.15
301-22	9	Resistor—33,000 ohms ½ watt	.15
301-23	17	Resistor—47,000 ohms ½ watt	.15
301-25	27	Resistor—100,000 ohms ½ watt	.15
301-27	26	Resistor—220,000 ohms ½ watt	.15
301-29	15, 30	Resistor—470,000 ohms ½ watt	.15
301-31	13, 21	Resistor—1 megohm ½ watt	.15
7129-1		Screw—Speaker Mounting Doz.	.18
7245-40		Screw—Chassis Mtg., 8-32x¼ Doz.	.20
7245-31		Screw—Chassis Assembly Doz.	.08
111-2		Shield Assembly—Tube	.15
455-1		Sockets—Octal Base Tube	.15
22-2	36 A & B	Speaker—8" P. M. Dynamic	6.50
22-1	36 A & B	Speaker—6" P. M. Dynamic	5.50
470-3		Terminal Strip—3 lug	.06
470-11		Terminal Strip—Bias Cell	.15
550-1	10	Transformer—Input I. F.	1.50
550-2	12	Transformer—Output I. F.	1.50
7471-4		Washer—Chassis Mounting Doz.	.08
7477-1		Washer (Felt) for Knob Doz.	.05

POWER PACK PARTS MODEL 4B

Part Number	Reference Figure 2	Description	List Price
420-1	52	Choke—Iron Core	1.50
425-1	42	Choke Assembly "A"	.30
425-2	53	Choke Assembly "B"	.40
803-1		Clips for Cable "A"	.15
231-1	50 A & B	Cond.—Elec., 8-8 200 V	1.50
250-40	43, 44, 45	Condenser—.5-150 Paper	.25
250-22	49	Condenser—.1-400 Paper	.20
250-41	47, 48	Condenser—.01-1200 Paper	.20
7530-3		Rivets for Socket Doz.	.05
451-3		Socket—6-prong (Vibrator)	.15
470-2		Terminal Strip—2 lug	.05
405-1	46	Transformer	3.00
806-1	41	Vibrator—6-prong Sync.	4.00

ALL PRICES SUBJECT TO CHANGE WITHOUT NOTICE

©John F. Rider, Publisher

PARTS AND PRICE LIST MODEL 5A

Part Number	Reference Schematic Diagram	Description	List Price
42-3		Cabinet (T1)	
42-4		Cabinet (T1-V) Ivory	
42-5		Cabinet (T1-K) Black	
801-8		Clips—Grid	$ .02
501-1	1	Coil Assembly—Antenna	1.20
503-1	7	Coil Assembly—Oscillator	1.00
202-3	2 A & B	Condenser—2-Gang Variable	2.50
231-2	26 27	Condenser—Electrolytic (8-8 mfd.)	1.50
250-18	8	Condenser—Tubular .05-400	.18
250-27	11 13	Condenser—Tubular .25-200	.20
250-21	16	Condenser—Tubular .1-200	.18
250-12	19	Condenser—Tubular .01-400	.18
250-11	22	Condenser—Tubular .006-600	.18
251-1	25	Condenser—Moulded .01-600	.18
260-7	6	Condenser—Mica 100 mmfd.	.18
260-18	18	Condenser—Mica 1000 mmfd.	.20
340-3	3 A & B	Control—Volume and Switch	1.20
875-1		Cord and Plug (AC Line)	.50
64-4		Crystal—Pyralin	.40
625-2		Dial Mounting Plate Assembly	.70
601-3		Dial Scale	.60
7382-1		Dial Scale Mounting Rivets	.02
602-3		Dial Pointer	.10
805-3	28	Dial Pilot Bulb	.15
465-3		Dial Pilot Bulb Socket	.10
125-1		Dial Drive Pulley	.40
8036-1		Dial Drive Cord	.20
127-1		Dial Cord Spring	.03
150-1		Dial Shaft Bushing	.15

Part Number	Reference Schematic Diagram	Description	List Price
151-1		Dial Drive Shaft	$ .15
700-1		Grommets—Rubber Black	.03
700-2		Grommets—Rubber (Condenser Mounting)	.04
70-1		Knobs—Walnut	.15
70-4		Knobs—Ivory	.25
70-5		Knobs—Black	.15
302-21	9	Resistor—Carbon 22,000 ohms (1 watt)	.18
306-21	21	Resistor—Carbon 470 ohms (½ watt)	.15
301-8	4	Resistor—Carbon 150 ohms (½ watt)	.15
301-23	5	Resistor—Carbon 47,000 ohms (½ watt)	.15
301-25	15	Resistor—Carbon 100,000 ohms (½ watt)	.15
301-29	20, 17, 14	Resistor—Carbon 470,000 ohms (½ watt)	.15
451-4		Socket—7-Prong	.10
451-3		Socket—6-Prong	.10
451-2		Socket—5-Prong	.10
451-1		Socket—4-Prong	.10
20-2	23	Speaker—5-inch Dynamic	4.50
470-7		Terminal Strip—1-Lug	.05
470-8		Terminal Strip—2-Lug	.06
400-1	24	Transformer—Power 110-volt 50-cycle	3.50
400-7		Transformer—Power, Universal	5.00
550-5	10	Transformer Assembly—I. F. Input	1.50
550-6	12	Transformer Assembly—I. F. Output	1.50
111-3		Tube Shield	.15
123-1		Washer—Cup Type	.04
7476-1		Washer—Spring Type	.02
7475-1		Washer "C" Dozen	.05
8021-1		Washer—Fibre Black Dozen	.05

ALL PRICES SUBJECT TO CHANGE WITHOUT NOTICE

©John F. Rider, Publisher

FAIRBANKS, MORSE & CO.

MODEL 5A
Schematic, Socket Trimmers

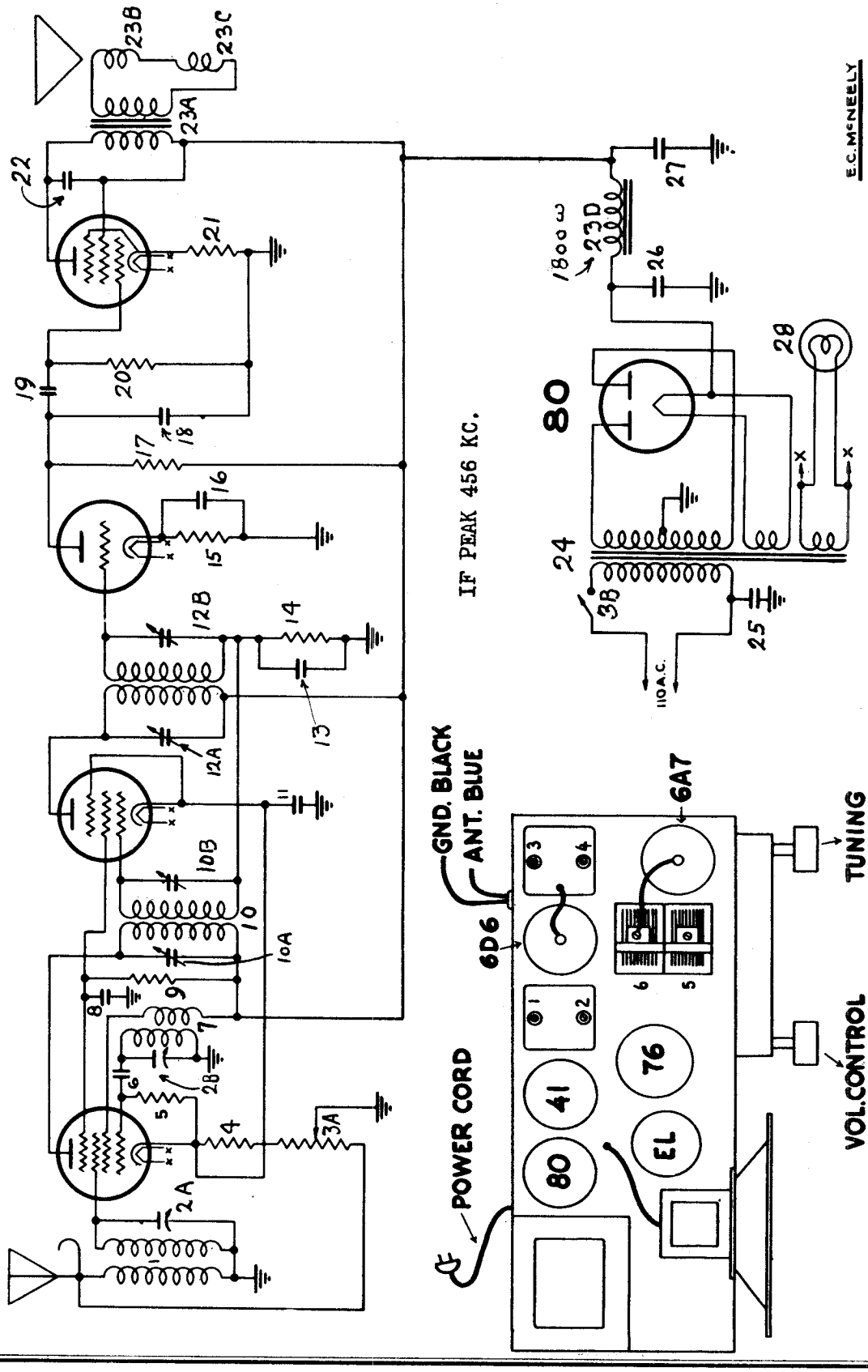

TOP VIEW OF CHASSIS SHOWING LOCATION OF TRIMMERS AND TUBES, AS WELL AS OTHER COMPONENT PARTS

©John F. Rider, Publisher

MODEL 5A
Alignment, Voltage
Resistance

FAIRBANKS, MORSE & CO.

ALIGNMENT

The model 5A is a five-tube AC operated, superhetrodyne. Alignment is given below in chart form. Make adjustments in the order given. The output meter may be any low range AC voltmeter, preferably about 0-15 volts. It should be connected from the plate of the 6F6G tube to ground with a .1 mfd. condenser in series with one of the leads. When the hand tends to go off scale, reduce the input from the signal generator and keep the volume control at maximum. Inaccurate alignment is likely to result if too strong a signal is used.

No.	Connect Generator To	Generator Frequency	Dummy	Dial Setting	Stage	Trimmer No.	Peak For	Range Switch	AFC Switch	Special Instrs.
1	6A7 Grid	456 KC	.1 mfd. Condenser	550 KC	2nd IF	1	Max.			
2	6A7 Grid	456 KC	.1 mfd. Condenser	550 KC	2nd IF	2	Max.			
3	6A7 Grid	456 KC	.1 mfd. Condenser	550 KC	1st IF	3	Max.			
4	6A7 Grid	456 KC	.1 mfd. Condenser	550 KC	1st IF	4	Max.			
5	Antenna Lead	1500 KC	200 mmfd. Condenser	1500 KC	Osc.	5	Max.			
6	Antenna Lead	1500 KC	200 mmfd. Condenser	1500 KC	Det.	6	Max.			

Check calibration and sensitivity at 600 KC. No adustment necessary.

ALIGNMENT PROCEDURE CHART

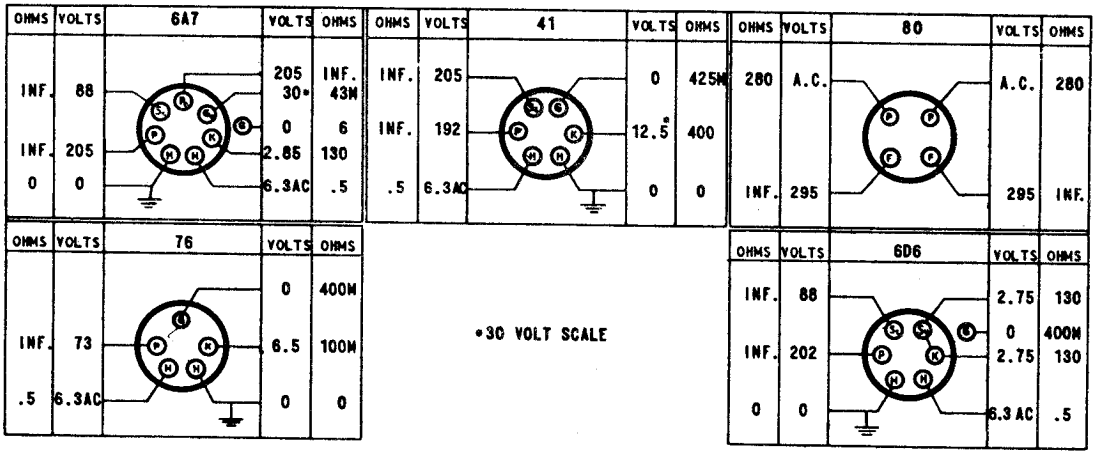

VOLTAGE AND RESISTANCE ANALYSIS CHART

©John F. Rider, Publisher

FAIRBANKS, MORSE & CO.

MODEL 5B
Schematic, Socket Trimmers

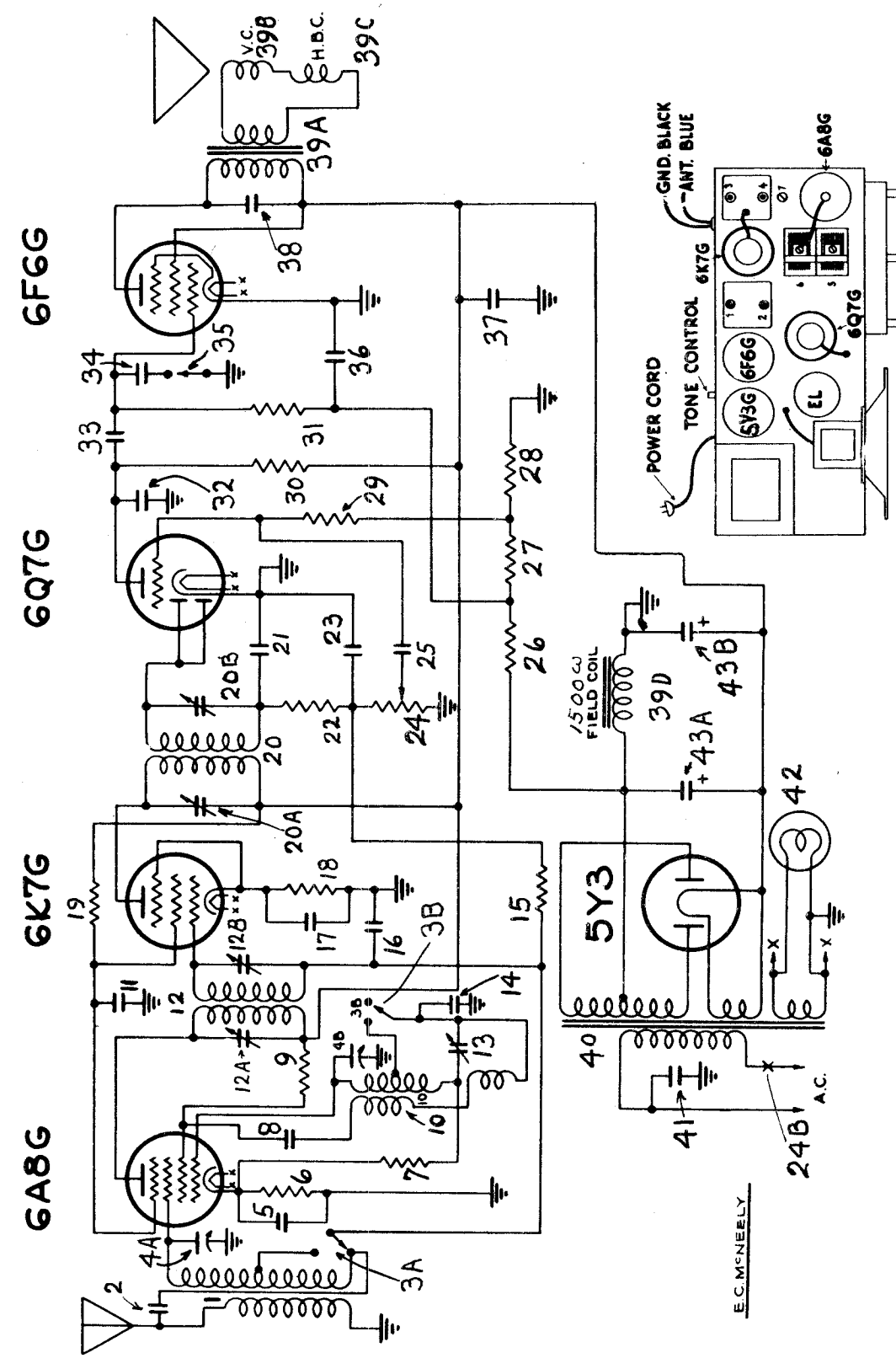

TOP VIEW OF CHASSIS SHOWING LOCATION OF TRIMMERS AND TUBES AS WELL AS OTHER COMPONENT PARTS

IF PEAK 456 KC.

©John F. Rider, Publisher

MODEL 5B
Alignment, Voltage
Resistance

FAIRBANKS. MORSE & CO.

ALIGNMENT

The model 5B is a five-tube AC operated, superhetrodyne. It is capable of receiving signals on the standard broadcast band, 540 to 1750 kilocycles, and on the police-amateur band, 2.35 to 7.8 megacycles.

Alignment procedure is given below in chart form. Make adjustments in the order given. The output meter may be any low range AC voltmeter, preferably about 0-15 volts. It should be connected from the plate of the 6F6G tube to ground with a .1 mfd. condenser in series with one of the leads. When the hand tends to go off scale, reduce the input from the signal generator and keep the volume control at maximum. If too strong a signal is fed to the receiver and the volume control is used to keep the output meter hand on scale, the A.V.C. will operate and inccurate alignment will result.

No.	Connect Generator To	Generator Frequency	Dummy	Range Switch	Dial Setting	Stage	Trimmer No.	AFC Switch	Peak For	Special Instrs.
1	6A8G Grid	456 KC	Condenser .1 mfd.	BC	550 KC	2nd IF	1		Max.	
2	6A8G Grid	456 KC	.1 mfd. Condenser	BC	550 KC	2nd IF	2		Max.	
3	6A8G Grid	456 KC	.1 mfd. Condenser	BC	550 KC	1st IF	3		Max.	
4	6A8G Grid	456 KC	.1 mfd. Condenser	BC	550 KC	1st IF	4		Max.	
5	Antenna Lead	1500 KC	200 mmfd.	BC	1500 KC	Osc.	5		Max.	
6	Antenna Lead	1500 KC	200 mmfd.	BC	1500 KC	Det.	6		Max.	
7	Antenna Lead	600 KC	200 mmfd.	BC	600 KC	Osc.	7		Max.	Rock Gang Condenser

Check Short Wave Calibration at 2.5 and 6 megacycles.
No adjustment is necessary.

ALIGNMENT CHART

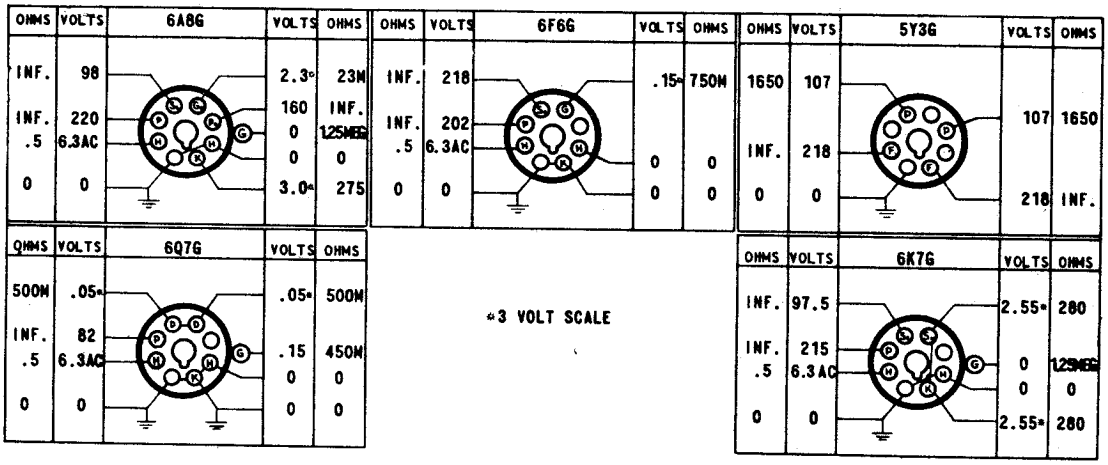

VOLTAGE AND RESISTANCE ANALYSIS CHART

©John F. Rider, Publisher

©John F. Rider, Publisher

PARTS AND PRICE LIST MODEL 5B

Part Number	Reference Schematic Diagram	Description	List Price
42-1		Cabinet (T2)	
801-5		Clip—Grid	.02
501-2	1	Coil Assembly—Antenna	1.20
503-2	10	Coil Assembly—Oscillator	1.20
202-2	4 A & B	Condenser—2-Gang Variable	2.50
271-1	13	Condenser—Padder	.40
232-1	43 A & B	Condenser—Electrolytic (8-8-350)	1.60
250-11	38, 34	Condenser—Tubular .006-600	.18
250-15	25, 33	Condenser—Tubular .02-600	.18
250-39	5	Condenser—Tubular .05-200	.18
250-22	11, 37	Condenser—Tubular .1-400	.18
250-21	16, 17	Condenser—Tubular .1-200	.18
250-27	36	Condenser—Tubular .25-200	.20
251-1	41	Condenser—Moulded .01-600	.18
260-7	21, 23, 2	Condenser—Mica 100 mmfd.	.18
260-10	32	Condenser—Mica 250 mmfd.	.18
260-18	8	Condenser—Mica 1000 mmfd.	.20
261-22	14	Condenser—Mica 3000 mmfd.	.25
340-2	24 A & B	Control—Volume and Switch	1.20
875-1		Cord and Plug (AC Line)	.50
64-2		Crystal—Pyralin	.40
625-1		Dial Mounting Plate Assembly	.80
601-2		Dial Scale	.80
635-1		Dial Scale Clips Doz.	.05
805-2	42	Dial Light Bulb (6.3 volt)	.15
465-2		Dial Light Socket	.10
150-1		Dial Drive Shaft Bushing	.15
151-1		Dial Drive Shaft	.15
125-1		Dial Drive Pulley	.40
8036-1		Dial Drive Cord	.20
127-1		Dial Cord Spring	.03
602-3		Dial Pointer	.10
700-1		Grommet—Black Rubber	.03
700-2		Grommet—Gum Rubber	.04
70-1		Knobs—Bakelite	.15

Part Number	Reference Schematic Diagram	Description	List Price
302-21	19	Resistor—Carbon 22,000 ohms (1 watt)	.18
301-10	6, 18	Resistor—Carbon 330 ohms (½ watt)	.15
301-19	9	Resistor—Carbon 10,000 ohms (½ watt)	.15
301-21	7	Resistor—Carbon 22,000 ohms (½ watt)	.15
301-23	22, 28	Resistor—Carbon 47,000 ohms (½ watt)	.15
301-28	27	Resistor—Carbon 330,000 ohms (½ watt)	.15
301-29	29, 30, 31	Resistor—Carbon 470,000 ohms (½ watt)	.15
301-31	15	Resistor—Carbon 1,000,000 ohms (½ watt)	.15
301-33	26	Resistor—Carbon 2,200,000 ohms (½ watt)	.15
455-1		Socket—Octal 8	.15
455-2		Sockets—Octal 5 (Rectifier)	.15
20-4	39 ABCDE	Speaker—5½-inch Dynamic	4.50
381-2	3 A & B	Switch—Band	.60
380-1	35	Switch—Tone Control	.25
7245-31		Screw—Chassis Assembly	.01
470-1		Terminal Strip (1 Lug)	.04
470-2		Terminal Strip (2 Lug)	.05
470-10		Terminal Strip (4 Lug)	.10
550-1	12	Transformer—Input I. F.	1.50
550-2	20	Transformer—Output I. F.	1.50
400-2	40	Transformer—Power 110-volt 50-60 cycle	3.50
400-7	40	Transformer—Power Universal	5.00
111-2		Tube Shield	.15
123-1		Washer—Cup Type	.04
7476-1		Washer—Spring	.02
7475-1		Washer "C" Doz.	.05
7477-1		Washer—Felt Doz.	.05

ALL PRICES SUBJECT TO CHANGE WITHOUT NOTICE

MODEL 65 Export
Schematic

FAIRBANKS, MORSE & CO.

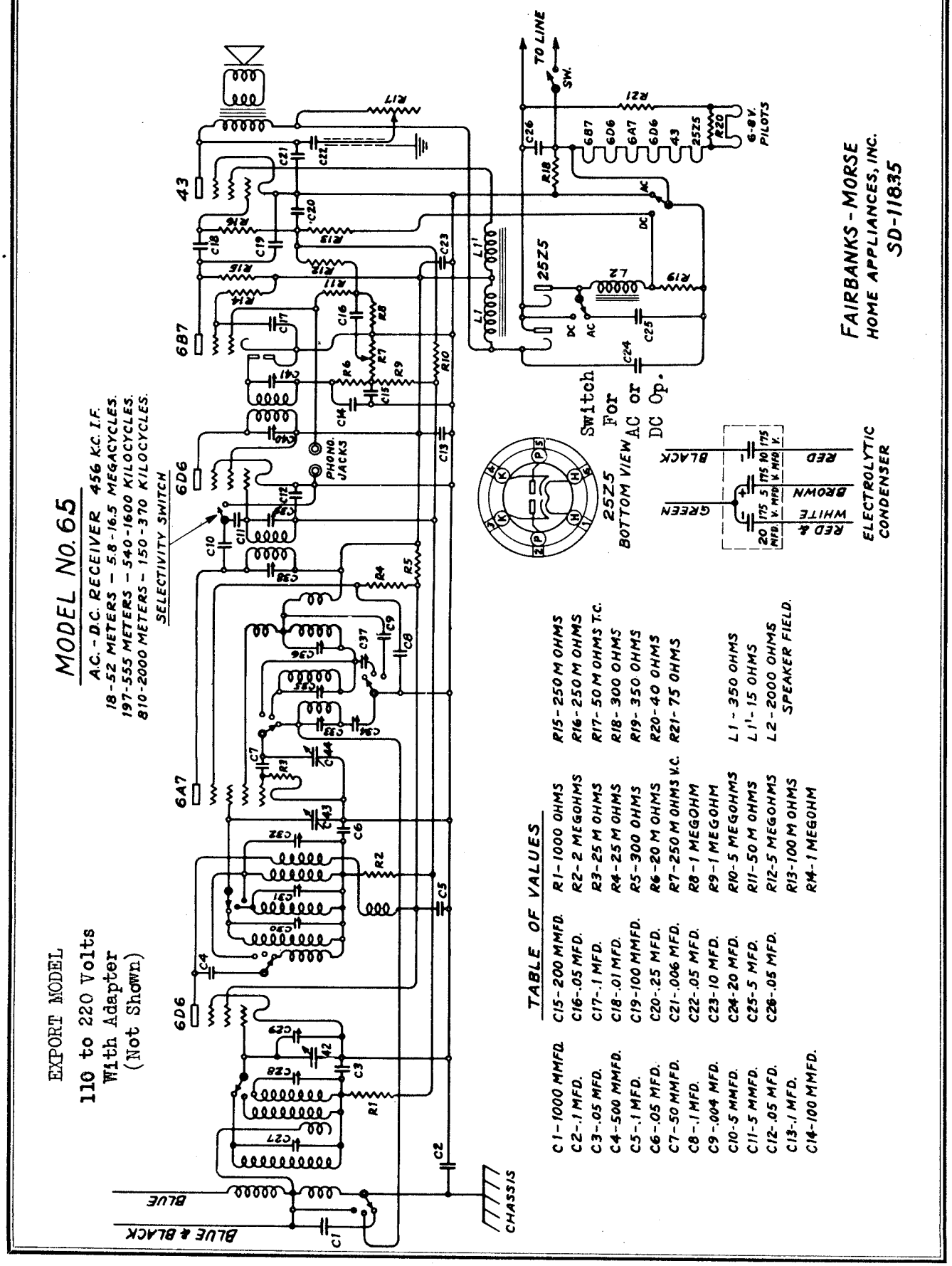

TABLE OF VALUES

C1 - 1000 MMFD.	C15 - 200 MMFD.	R1 - 1000 OHMS	R15 - 250 M OHMS
C2 - .1 MFD.	C16 - .05 MFD.	R2 - 2 MEGOHMS	R16 - 250 M OHMS
C3 - .05 MFD.	C17 - .1 MFD.	R3 - 25 M OHMS	R17 - 50 M OHMS T.C.
C4 - 500 MMFD.	C18 - .01 MFD.	R4 - 25 M OHMS	R18 - 300 OHMS
C5 - .1 MFD.	C19 - 100 MMFD.	R5 - 300 OHMS	R19 - 350 OHMS
C6 - .05 MFD.	C20 - .25 MFD.	R6 - 20 M OHMS	R20 - 40 OHMS
C7 - 50 MMFD.	C21 - .006 MFD.	R7 - 250 M OHMS V.C.	R21 - 75 OHMS
C8 - .1 MFD.	C22 - .05 MFD.	R8 - 1 MEGOHM	
C9 - .004 MFD.	C23 - 10 MFD.	R9 - 1 MEGOHM	
C10 - 5 MMFD.	C24 - 20 MFD.	R10 - 5 MEGOHMS	L1 - 350 OHMS
C11 - 5 MMFD.	C25 - 5 MFD.	R11 - 50 M OHMS	L1' - 15 OHMS
C12 - .05 MFD.	C26 - .05 MFD.	R12 - 5 MEGOHMS	L2 - 2000 OHMS SPEAKER FIELD.
C13 - .1 MFD.		R13 - 100 M OHMS	
C14 - 100 MMFD.		R14 - 1 MEGOHM	

©John F. Rider, Publisher

FIRESTONE TIRE & RUBBER CO.

MODEL R-3051
Chassis R-305
Schematic, Socket
Voltage, Parts

AIR CHIEF
FIRESTONE (STOCK NO. 7422-4)

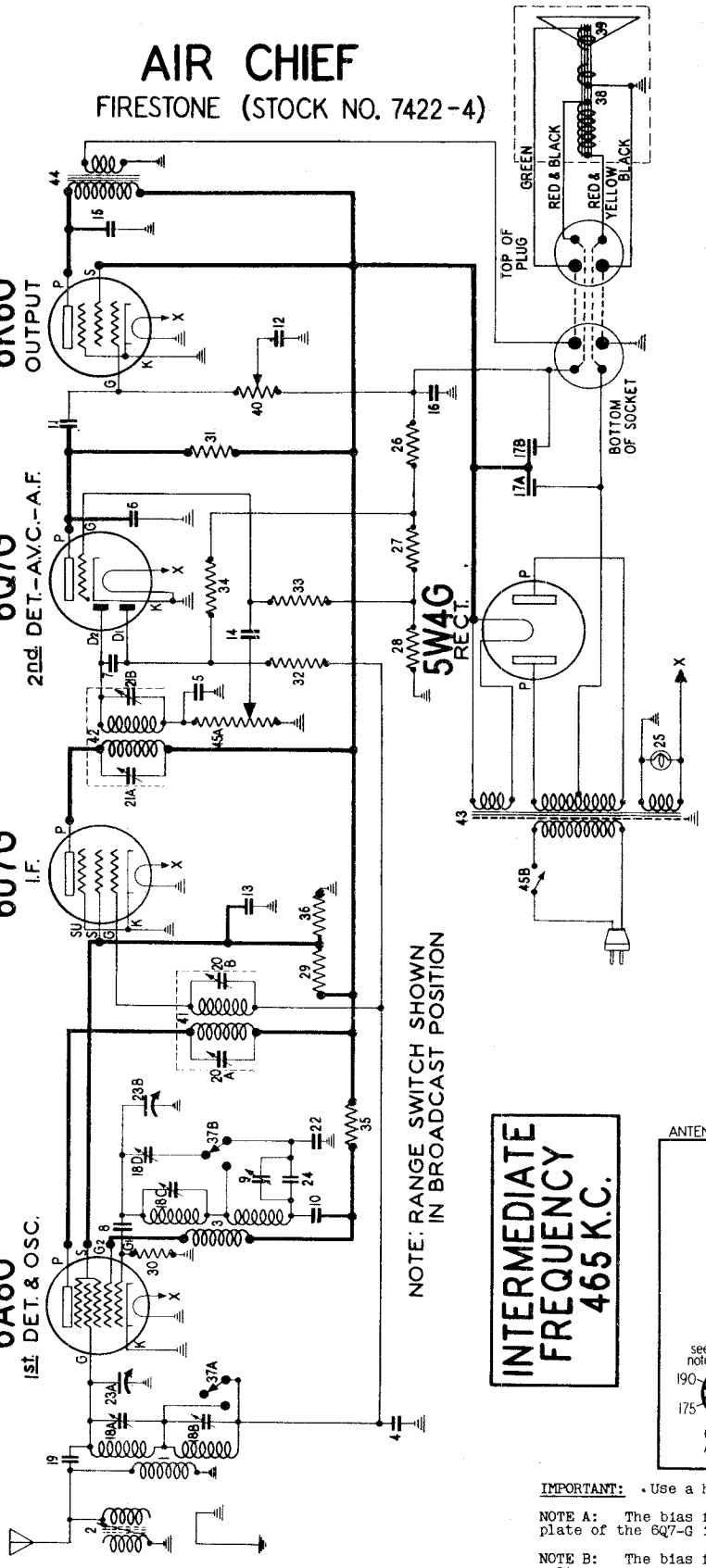

R-305 CHASSIS (RECEIVER MODEL R-3051)

DIAGRAM NUMBER	PART NUMBER	DESCRIPTION	LIST PRICE
1	110508	Coil - Antenna	$1.15
2	110536	Coil - Antenna trap	1.02
3	110512	Coil - Oscillator	.85
4	88534	Condenser - paper .05 mfd. 150 volt	.25
5-6	83539	Condenser - mica 260 mmfd.	.20
7	83783	Condenser - mica 110 mmfd.	.20
8	85061	Condenser - mica 51 mmfd.	.15
9	85285	Condenser - padding	.40
10-11-12	88030	Condenser - paper .01 mfd. 400 volt	.25
13	86046	Condenser - Paper .1 mfd. 150 volt	.25
14	88189	Condenser - paper .05 200 volt	.25
15	89826	Condenser - paper .004 mfd. 750 volt	.24
16	110377	Condenser - Electrolytic 10 mfd. 25 volt	.80
17A-17B	110497	Condenser - Electrolytic (Sect. A-8 mfd.) (Sect. B-8 mfd.)	1.50
18A to 18D	110498	Condenser - trimmer strip	.75
19	110510	Condenser - wire 3 mmfd.	.12
20A-20B	110516	Condenser - trimmer strip for I.F. transformers	.58
21A-21B			
22	110523	Condenser - mica .00196 mfd. (3%)	.32
23A-23B	110600	Condenser - variable gang	3.50
24	111127	Condenser - mica 520 mmfd. (3%)	.24

DIAGRAM NUMBER	PART NUMBER	DESCRIPTION	LIST PRICE
25	110629	Lamp - pilot, 6.3 volt .25 amps.	.15
26	88583	Resistor - wire wound 240 ohms 1 watt	.15
27	89111	Resistor - wire wound 20 ohm ½ watt	.12
28	110524	Resistor - wire wound 40 ohm ½ watt	.12
29	110551	Resistor - carbon 15,000 ohms 1 watt (10%)	.15
30	110552	Resistor - carbon 47,000 ohms ½ watt	.12
31	110553	Resistor - carbon 220,000 ohms ½ watt	.12
32-33	110554	Resistor - carbon 1 megohm ½ watt	.12
34	110559	Resistor - carbon 470,000 ohms ½ watt	.12
35	110575	Resistor - carbon 10,000 ohms ½ watt (20%)	.12
36	110582	Resistor - carbon 12,000 ohms 1 watt	.15
37A-37B	110505	Switch - range	.90
38	R-275-A	Speaker - dynamic (5 inch)	6.50
39	110932	Cone and voice coil assembly (for R-275-A)	1.70
40	110504	Tone control (500,000 ohms)	.95
41	110514	Transformer - first I.F.	2.00
42	110520	Transformer - second I.F.	2.00
43	110524	Transformer - Power 115 volt 60 cycle	4.20
	111956	Transformer - Power 115 volt 25 cycle	7.00
44	110537	Transformer - output	1.50
45A-45B	110508	Volume control - 1 megohm - with off-on switch	1.25

PRICES SUBJECT TO CHANGE WITHOUT NOTICE

INTERMEDIATE FREQUENCY 465 K.C.

SOCKET VOLTAGES

ANTENNA GROUNDED — DIAL TUNED TO 540 KC.

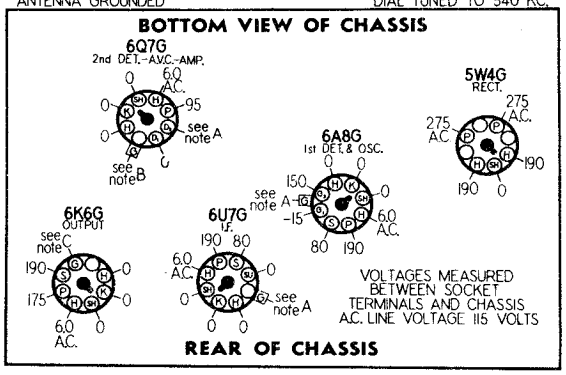

IMPORTANT: Use a high resistance voltmeter of 1,000 ohms per volt.

NOTE A: The bias for the control grids of the 6A8-G, 6U7-G and the diode plate of the 6Q7-G is -3 volts measured across resistors 27 and 28.

NOTE B: The bias for the control grid of the 6Q7-G triode section is -2 volts measured across resistor 28.

NOTE C: The bias for the control grid of the 6K6-G tube is -14 volts measured across resistors 26, 27, and 28.

©John F. Rider, Publisher

MODEL R-3051
Chassis R-305
Trimmers, Alignment
Dial Data

FIRESTONE TIRE & RUBBER CO.

SERVICE DATA FOR AIR CHIEF MODEL R-3051 RECEIVER

STOCK NO.-7422-4

The Model R-3051 is a five tube, two band superheterodyne receiver. It has an intermediate frequency of 465 KC. and tuning ranges of 525 to 1750 KC. and 2200 to 7000 KC.

ALIGNMENT EQUIPMENT & PROCEDURE

For alignment, an output meter and an accurately calibrated signal generator with a tuning range from 465 KC. to 6.0 MC. are required.

IMPORTANT: THE BROADCAST BAND MUST BE ALIGNED AFTER THE SHORT-WAVE BAND.

1. Connect the output meter across the voice coil or between the plate of the 6K6G tube and ground, depending on the type of meter. (The more sensitive type should be connected across the voice coil.)
2. Connect the ground lead of the signal generator to the chassis of the receiver.
3. Turn the volume control to the maximum volume position and keep it in this position throughout the entire alignment procedure.
4. With the gang condenser in full mesh set the pointer on the horizontal black line below 530 KC. on the dial.
5. Using a bakelite screw driver proceed to align in exactly the same order as shown in the table below.

DUMMY ANT. IN SERIES WITH SIG. GEN.	CONNECTION OF SIG. GENERATOR OUTPUT TO RECEIVER	SIGNAL GENERATOR FREQUENCY	RANGE SWITCH POSITION	RECEIVER DIAL SETTING	TRIMMER NUMBER	TRIMMER DESCRIPTION	TYPE OF ADJUSTMENT
.1 MFD. CONDENSER	CONTROL GRID OF 6A8G TUBE (Do not remove grid clip)	465 KC.	BROADCAST (Clockwise)	ANY POINT WHERE IT DOES NOT AFFECT THE SIGNAL	1 - 2	1ST I.F.	ADJUST FOR MAXIMUM OUTPUT. THEN REPEAT ADJUSTMENT.
					3 - 4	2ND I.F.	
400 OHM CARBON RESISTOR	ANTENNA LEAD	465 KC.	BROADCAST Clockwise	ANY POINT WHERE IT DOES NOT AFFECT THE SIGNAL	5	WAVE TRAP	ADJUST FOR MINIMUM OUTPUT USING STRONG GENERATOR SIGNAL.
400 OHM CARBON RESISTOR	ANTENNA LEAD	6.0 MC.	SHORT-WAVE Counter-clockwise	6.0 MC.	6	SHORT-WAVE OSCILLATOR	ADJUST TO SIGNAL. CHECK TO SEE IF PROPER PEAK WAS OBTAINED BY TUNING IN IMAGE AT APPROX. 5.1 MC. IF IMAGE DOES NOT APPEAR REALIGN AT 6.0 MC. WITH TRIMMER SCREW FARTHER OUT.
400 OHM CARBON RESISTOR	ANTENNA LEAD	6.0 MC.	SHORT-WAVE Counter-clockwise	TUNE TO 6.0 MC. GENERATOR SIGNAL	7	SHORT-WAVE ANTENNA	ADJUST FOR MAXIMUM OUTPUT. TRY TO INCREASE OUTPUT BY DETUNING TRIMMER AND RETUNING RECEIVER DIAL UNTIL MAXIMUM OUTPUT IS OBTAINED.
400 OHM CARBON RESISTOR	ANTENNA LEAD	1500 KC.	BROADCAST Clockwise	1500 KC.	8	BROADCAST OSCILLATOR (Shunt)	ADJUST TRIMMER TO BRING IN SIGNAL.
400 OHM CARBON RESISTOR	ANTENNA LEAD	1500 KC.	BROADCAST (Clockwise)	TUNE TO 1500 KC. GEN.SIG.	9	BROADCAST ANTENNA	ADJUST FOR MAXIMUM OUTPUT.
400 OHM CARBON RESISTOR	ANTENNA LEAD	600 KC.	BROADCAST (Clockwise)	TUNE TO 600 KC. GENERATOR SIGNAL.	10	BROADCAST OSCILLATOR Series Pad	ADJUST FOR MAXIMUM OUTPUT. TRY TO INCREASE OUTPUT BY DETUNING TRIMMER AND RETUNING RECEIVER DIAL UNTIL MAXIMUM OUTPUT IS OBTAINED.

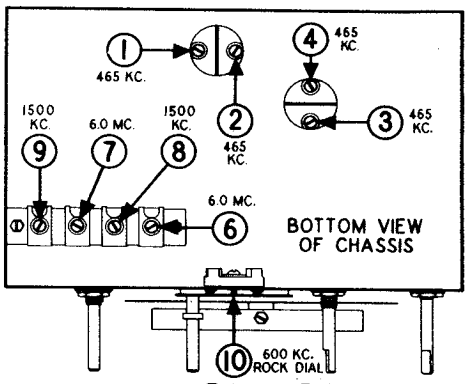

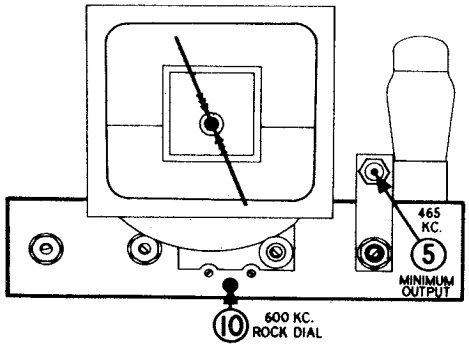

DIAL DRIVE & MISCELLANEOUS PARTS

PART NUMBER	DESCRIPTION	LIST PRICE
83552	Bolt - chassis mounting (#10x7/8")	$ .03
110507	Bracket - for mtg. electrolytic condenser	.05
110601	Bracket - for dial & pilot light mtg.	.07
110486	Clamp - for mounting 5 inch speaker	.05
89912	Clip - grounding, for tube base	.02
110612	Dial drive - disc	.09
112167	Escutcheon - dial	1.45
112475	Knob - control	.18
12349	Nut - 8-32 for speaker mtg. Per C	.45
110496	Plug - speaker (4 prong)	.12
112432	Pointer - dial	.24
112147	Reflector - dial	.25
34214	Retaining ring - for drive shaft (rear)	.02
110611	Retaining ring - for drive shaft (front)	.02
112148	Scale - dial	.80
85040	Screw - self tapping 6 x 1/4 Per C	$ .35
88822	Screw - ornamental head 8-32 (speaker mtg.)	.02
110606	Shaft - drive and disc assembly	.16
88161	Shield - tube	.08
88164	Shield - tube cap (slotted)	.06
89911	Shield - tube base	.04
65427	Socket - octal base	.15
110501	Socket - 4 prong (for spkr.)	.16
110627	Socket - dial lamp	.12
87950	Washer - steel (chassis mtg.)	.01
77223	Washer - for spkr. mtg.	.01
84015	Washer - felt, for back of knobs	.01
110610	Washer - spring for drive shaft	.02
110613	Washer - flat for dial drive	.01
110614	Washer - spring, dial drive disc retaining	.03

PRICES SUBJECT TO CHANGE WITHOUT NOTICE

©John F. Rider, Publisher

MODELS 3061 to 3069 incl.

FIRESTONE TIRE & RUBBER CO.

Chassis R-306
Schematic, Socket
Voltage, Parts

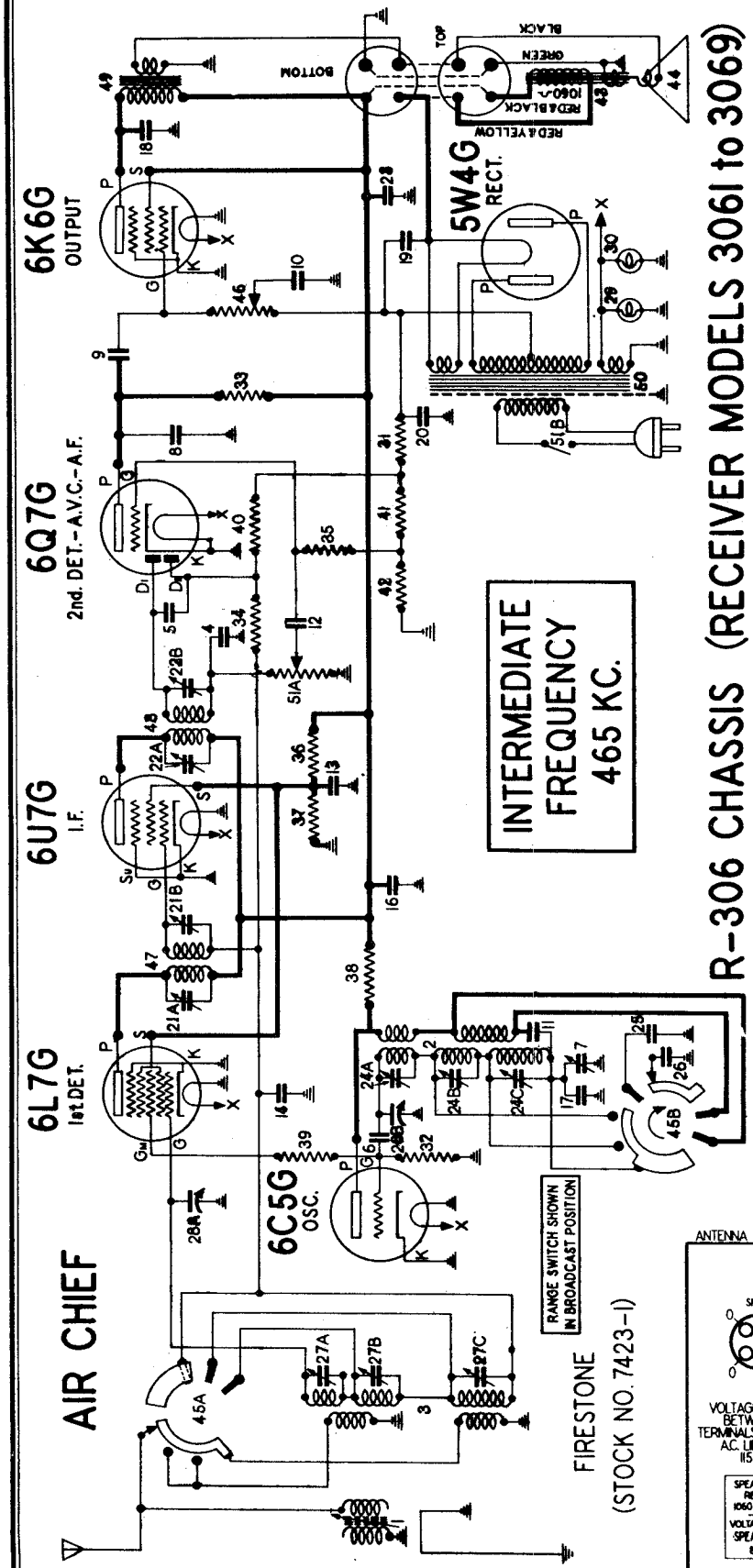

R-306 CHASSIS (RECEIVER MODELS 3061 to 3069)

DIAGRAM NUMBER	PART NUMBER	DESCRIPTION	LIST PRICE
1	110536	Coil - antenna trap	$1.02
2	110660	Coil - osc. (without trimmer)	1.40
3	111300	Coil - antenna (with trimmer)	.95
4	83539	Condenser - mica 260 mmfd.	.20
5-8	85061	Condenser - mica 51 mmfd.	.15
7	85285	Condenser - padding	.40
8	86394	Condenser - mica 510 mmfd.	.25
9	88026	Condenser - paper .02 mfd. 400 V.-	.25
10-11	88030	Condenser - paper .01 mfd. 400 V.-	.25
12	88189	Condenser - paper .05 mfd. 200 V.-	.25
13	88191	Condenser - paper .1 mfd. 300 V.-	.25
14	88534	Condenser - paper .05 mfd. 150 V.-	.25
16	88682	Condenser - paper .1 mfd. 400 V.-	.25
17	89564	Condenser - mica 345 mmfd. (3%)	.40
18	89826	Condenser - paper .004 mfd. 750 V.	.24
19	89937	Condenser - elect. 30 mfd. 450 V.-	1.60
	112315	Condenser - elect. 15 mfd. 450 volt (arm-chair model only	1.55
20	110377	Condenser - elect. 10 mfd. 25 volt	.80
	111689	Condenser - elect. 20 mfd. 25 volt (arm-chair model only)	1.20
21A-21B	110518	Condenser - trimmer strip (for I.F. transformer)	.58
22A-22B	110768	Condenser - elect. 8 mfd. 450 volt	1.25
23	112710	Condenser - elect.12 mfd. 450 volt (arm-chair model only)	1.50
24A to C	110659	Condenser - trimmer (3 section) for oscillator coil	.85

DIAGRAM NUMBER	PART NUMBER	DESCRIPTION	LIST PRICE
25	110806	Condenser - mica .00332 mfd.(3%)	.40
26	110907	Condenser - mica 980 mmfd. (3%)	.30
27A to C	111322	Condenser - trimmer (3 section) for antenna coil	.65
28A - 28B	112238	Condenser - variable gang	4.00
29-30	110629	Lamp - dial 6.3 volt .25 amp.	.15
31	89770	Resistor - wire wd. 200 ohm 2 watt	.18
32	110552	Resistor - carbon 47,000 ohm 1/4 W.	.12
33	110553	Resistor - carbon 220,000 ohm ½ W.	.12
34	110554	Resistor - carbon 1 meg. 1/4 watt	.12
35	110559	Resistor - carbon 470,000 ohm ½ W.	.12
36	110561	Resistor - carbon 15,000 ohm 2 W.-	.30
37	110562	Resistor - carbon 22,000 ohm ½ W.-	.12
38	110578	Resistor - carbon 10,000 ohm ½ W.-	.12
39	110590	Resistor - carbon 180 ohm 1/4 watt	.12
40	110591	Resistor - carbon 680,000 ohm ½ W.	.12
41-42	112182	Resistor - wire wd. 27 ohm 1/2 W.	.12
43	R-277-A	Speaker - dynamic 8 inch Cone - voice coil assembly for R-277-A Spkr. (do not place gasket between cone and frame)	7.50
44	110943		1.70
45A - 45B	112173	Switch - range	1.20
46	112174	Tone control 500,000 ohms	.96
47	110851	Transformer - 1st I.F.	1.85
48	112168	Transformer - 2nd I.F.	1.80
49	112320	Transformer - output	1.75
50	112346	Transformer - power 115 V.-60 C.-	5.00
	112621	Transformer - power 115 V.-25 C.-	8.50
51A - 51B	112175	Volume control - 1 meg. (with off-on switch)	1.25

PRICES SUBJECT TO CHANGE WITHOUT NOTICE

IMPORTANT: Use a high resistance voltmeter of 1,000 ohms per volt.

NOTE A: The bias for the control grids of the 6L7G, 6U7G, and the diode plate of the 6Q7G is -3.5 volts measured across resistors number 41 and 42.

NOTE B: The bias for the control grid of the 6Q7G is -1.5 volts measured across resistor number 42.

NOTE C: The bias for the control grid of the 6K6G output tube is -17 volts measured across resistors 31, 41, and 42.

SOCKET VOLTAGES

ANTENNA GROUNDED — DIAL TUNED TO 520 KC.

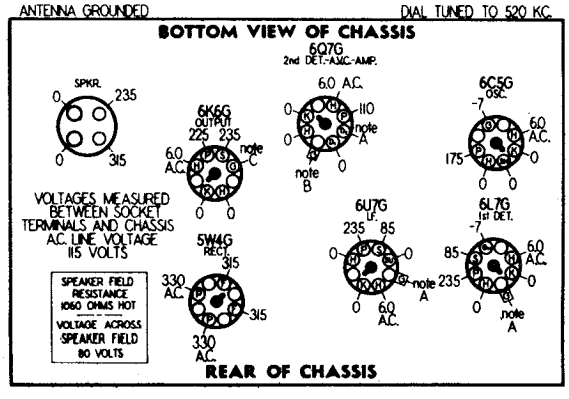

©John F. Rider, Publisher

MODELS 3061 to 3069 incl.
Chassis R-306
Trimmers, Alignment
Dial Data

FIRESTONE TIRE & RUBBER CO.

SERVICE DATA FOR AIR CHIEF MODEL R-306 - RECEIVER

STOCK NO. 7423-1

The model R-306 Air Chief is a three band superheterodyne receiver having a tuning range of 525 KC. to 18,100 KC.

ALIGNMENT EQUIPMENT & PROCEDURE

For alignment, an output meter and an accurately calibrated signal generator with a tuning range from 465 KC. to 18. MC. are required.

1. Connect the output meter across the voice coil or between the plate of the 6K6G tube and ground, depending on the type of meter. (The more sensitive type should be connected across the voice coil.)
2. Connect the ground lead of the signal generator to the chassis of the receiver.
3. Turn the volume control to the maximum volume position and keep it in this position throughout the entire alignment procedure.
4. With the gang condenser in full mesh set the pointer on the horizontal black line below 530 KC. on the dial.

IMPORTANT: THE BROADCAST BAND MUST BE ALIGNED AFTER THE SHORT-WAVE BAND.

DUMMY ANT. IN SERIES WITH SIG. GEN.	CONNECTION OF SIG. GENERATOR OUTPUT TO RECEIVER	SIGNAL GENERATOR FREQUENCY	RANGE SWITCH POSITION	RECEIVER DIAL SETTING	TRIMMER NUMBER	TRIMMER DESCRIPTION	TYPE OF ADJUSTMENT
.1 MFD. CONDENSER	CONTROL GRID OF 6A8G TUBE (Do not remove grid clip)	465 KC.	BROADCAST (Clockwise)	ANY POINT WHERE IT DOES NOT AFFECT THE SIGNAL	1 - 2	1ST I.F.	ADJUST FOR MAXIMUM OUTPUT. THEN REPEAT ADJUSTMENT
					3 - 4	2ND I.F.	
400 OHM CARBON RESISTOR	ANTENNA LEAD	465 KC.	BROADCAST (Clockwise)	ANY POINT WHERE IT DOES NOT AFFECT THE SIGNAL	5	WAVE TRAP	ADJUST FOR MINIMUM OUTPUT USING STRONG GENERATOR SIGNAL.
400 OHM CARBON RESISTOR	ANTENNA LEAD	16.0 MC.	POLICE (Center)	16.0 MC.	6	SHORT-WAVE OSCILLATOR	ADJUST TO SIGNAL. CHECK TO SEE IF PROPER PEAK WAS OBTAINED BY TUNING IN IMAGE AT APPROX. 15.1 MC. IF IMAGE DOES NOT APPEAR REALIGN AT 16.0 MC. WITH TRIMMER SCREW FARTHER OUT.
400 OHM CARBON RESISTOR	ANTENNA LEAD	16.0 MC.	POLICE (Center)	TUNE TO 16.0 MC. GENERATOR SIGNAL	7	SHORT-WAVE ANTENNA	ADJUST FOR MAXIMUM OUTPUT. TRY TO INCREASE OUTPUT BY DETUNING TRIMMER AND RETUNING RECEIVER DIAL UNTIL MAXIMUM OUTPUT IS OBTAINED.
400 OHM CARBON RESISTOR	ANTENNA LEAD	5.0 MC.	SHORT-WAVE Counter-clockwise	5.0 MC	8	POLICE OSCILLATOR	ADJUST TO SIGNAL. CHECK TO SEE IF PROPER PEAK WAS OBTAINED BY TUNING IN IMAGE AT APPROX. 4.1 MC. IF IMAGE DOES NOT APPEAR REALIGN AT 5.0 MC. WITH TRIMMER SCREW FARTHER OUT.
400 OHM CARBON RESISTOR	ANTENNA LEAD	5.0 MC.	SHORT-WAVE Counter-clockwise	TUNE TO 5.0 MC. GENERATOR SIGNAL	9	POLICE ANTENNA	ADJUST FOR MAXIMUM OUTPUT. TRY TO INCREASE OUTPUT BY DETUNING TRIMMER AND RETUNING RECEIVER DIAL UNTIL MAXIMUM OUTPUT IS OBTAINED.
400 OHM CARBON RESISTOR	ANTENNA LEAD	1500 KC.	BROADCAST (Clockwise)	1500 KC.	10	BROADCAST OSCILLATOR (shunt)	ADJUST TRIMMER TO BRING IN SIGNAL.
400 OHM CARBON RESISTOR	ANTENNA LEAD	1500 KC.	BROADCAST (Clockwise)	TUNE TO 1500 KC. GEN.SIG.	11	BROADCAST ANTENNA	ADJUST FOR MAXIMUM OUTPUT.
400 OHM CARBON RESISTOR	ANTENNA LEAD	600 KC.	BROADCAST (Clockwise)	TUNE TO 600 KC. GENERATOR SIGNAL	12	BROADCAST OSCILLATOR Series Pad	ADJUST FOR MAXIMUM OUTPUT. TRY TO INCREASE OUTPUT BY DETUNING TRIMMER AND RETUNING RECEIVER DIAL UNTIL MAXIMUM OUTPUT IS OBTAINED.

DIAL DRIVE & MISCELLANEOUS PARTS

PART NUMBER	DESCRIPTION	LIST PRICE
110830	Bolt - chassis mtg. #10 x 1	$ .03
112236	Bracket - dial mtg.	.12
112321	Bracket - support(arm-chair model)	.30
88810	Bushing - rubber, for chassis mtg.	.03
110487	Clamp - for speaker mtg.	.06
89912	Clip - grounding, for tube base	.02
111302	Cord - dial drive (6 ft. lengths)	.30
112233	Drum - and bushing (dial drive)	.35
112265	Escutcheon - for dial (celluloid window)	2.10
112424	Knob - tone, tuning & volume	.18
112425	Knob - range switch	.22
112231	Mounting plate - for dial	.35
12349	Nut - 8-32 for speaker mtg. ---per C	.45
110022	Pin - for escutcheon mtg.	.01
110496	Plug - speaker	.12
112277	Pointer - assembly	.20
81145	Retaining ring - for drive shaft ---per C	.45
112282	Scale - dial	.85
112714	Screw - chassis mtg. (arm-chair model)	.08
88822	Screw - ornamental hd. 8-32(spkr. mtg.)	.02
112237	Shaft - dial drive	.10
88161	Shield - tube	.08
88162	Shield - tube - long section	.08
88164	Shield cap - tube, grid type	.06
89911	Shield - tube, base	.04
85427	Socket - octal base	.15

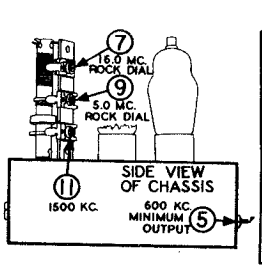

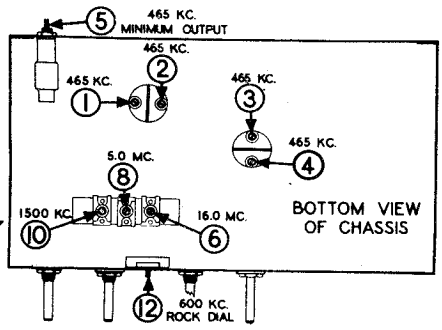

PART NUMBER	DESCRIPTION	LIST PRICE
110501	Socket - speaker (4 prong)	.16
110627	Socket - dial lamp	.12
111357	Spring - drive cord tension	.03
85785	Terminal strip - G.A.	.15
67568	Washer - embossed (for 89937 elec.cond.)	.05
77223	Washer - for speaker mounting	.01
89746	Washer - behind knobs	.005
110829	Washer - flat steel mtg.	.01

PRICES SUBJECT TO CHANGE WITHOUT NOTICE

©John F. Rider, Publisher

©John F. Rider, Publisher

AIR CHIEF

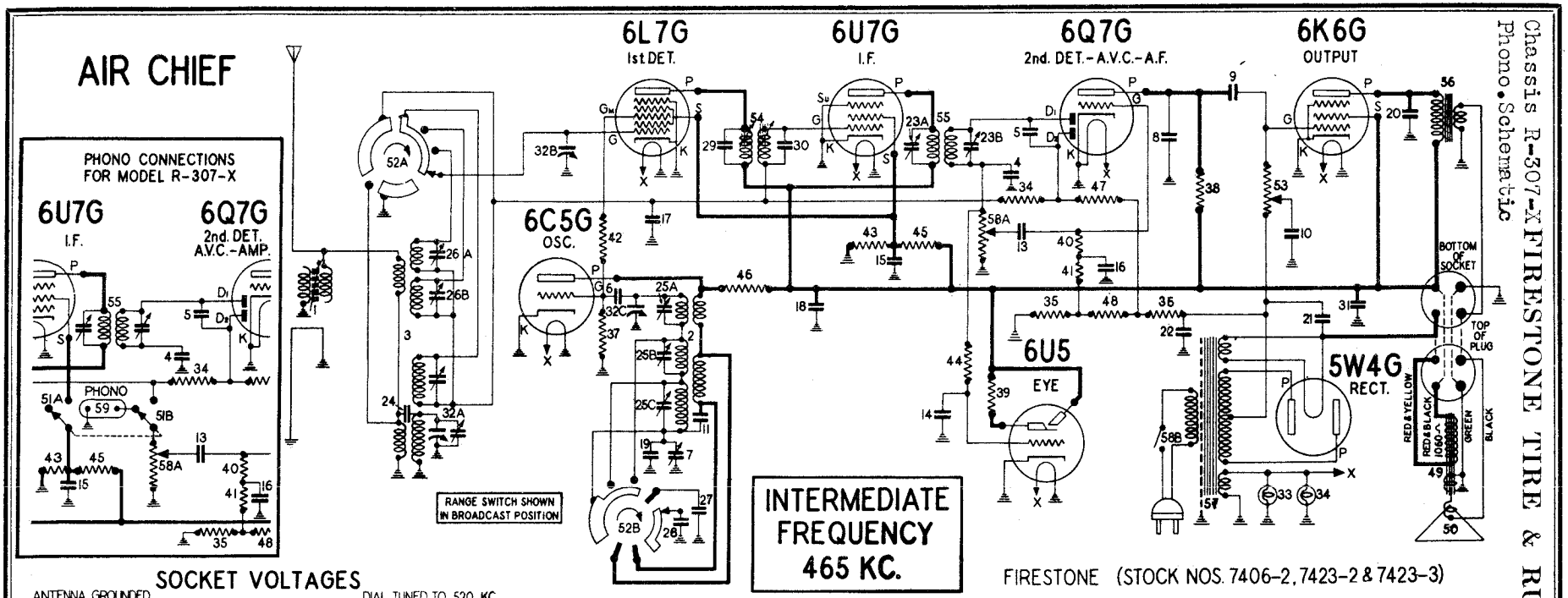

FIRESTONE (STOCK NOS. 7406-2, 7423-2 & 7423-3)

SOCKET VOLTAGES

ANTENNA GROUNDED — DIAL TUNED TO 520 KC.

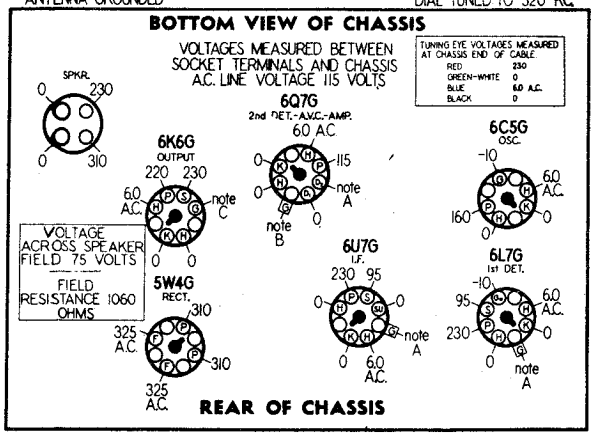

IMPORTANT: Use a high resistance voltmeter of 1,000 ohms per volt.

NOTE A: The bias for the control grids of the 6L7-G, 6U7-G and the diode plate of the 6Q7-G is -3 volts measured across resistors 35 and 48.

NOTE B: The bias for the control grid of the 6Q7-G triode section is-1.5 volts measured across resistor 35.

NOTE C: The bias for the control grid of the 6K6-G tube is -18 volts measured across resistors 35, 48, and 36.

R-307 CHASSIS (RECEIVER MODELS 3071 to 3079)

DIAGRAM NUMBER	DESCRIPTION	LIST PRICE
1	110536--Coil - wave trap	$1.02
2	110860--Coil - osc. (less trimmers)	1.40
3	110881--Coil - antenna & preselector (with dual trimmers)	3.00
4	83539--Condenser - mica 260 mmfd.	.20
5-6	85061--Condenser - mica 51 mmfd.	.15
7	85285--Condenser - padder	.40
8	85394--Condenser - mica 510 mmfd.	.25
9	88026--Condenser - paper .02 mfd. 400 volt	.25
10-11	88030--Condenser - paper .01 mfd. 400 volt	.25
13-14	88189--Condenser - paper .05 mfd. 200 volt	.25
15	86191--Condenser - paper .1 mfd. 300 volt	.25
16	86193--Condenser - paper .25 mfd. 150 volt	.35
17	86534--Condenser - paper .05 mfd. 150 volt	.25
18	88682--Condenser - paper .1 mfd. 400 volt	.25
19	89564--Condenser - mica 345 mmfd.	.40
20	89826--Condenser - paper .004 mfd. 750 volt	.24
21	89937--Condenser - elect. 30 mfd. 450 volt	1.60
22	110377--Condenser - elec. 10 mfd. 25 volt / 112113--Condenser - elec. 10 mfd. 50 volt (for model 307-X)	.60 / .85
23A - 23B	110516--Condenser - trimmer for I.F.trans.	.58
24	110850--Condenser - wire - 7 mmfd.	.18
25A to 25C	110859--Condenser - trim.(3 sect. for osc.coil)	.65
26A - 26B	110882--Condenser - trim.(2 sect. for ant.coil)	.44
27	110906--Condenser - mica 3320 mmfd.	.40
28	110907--Condenser - mica 980 mmfd.	.30
29-30	110952--Condenser - mica 100 mmfd. (5%)	.18
31	111352--Condenser - elec. 8 mfd. 450 volt (for model 307-X) / 112284--Condenser - elec., 8 mfd. 450 volt	1.25 / .95
32A to 32C	112292--Condenser - variable gang	5.50

DIAGRAM NUMBER	DESCRIPTION	LIST PRICE
33-34	110629--Lamp - dial 6.3 volt .25 amp.	.15
35	88465--Resistor - wire wound 25 ohm 1/2 watt	.15
36	89770--Resistor - wire wound 200 ohm 2 watt	.18
37	110552--Resistor - carbon 47,000 ohm 1/4 watt	.12
38	110553--Resistor - carbon 220,000 ohm 1/4 watt	.12
39-40	110554--Resistor 1 megohm 1/4 watt	.12
41	110559--Resistor - carbon 470,000 ohm 1/4 watt	.12
42	110560--Resistor - carbon 100 ohm 1/4 watt	.12
43	110562--Resistor - carbon 22,000 ohm 1/2 watt	.12
44	110570--Resistor - carbon 2.2 megohm 1/4 watt	.15
45	110575--Resistor - carbon 12,000 ohm 2 watt	.30
46	110576--Resistor - carbon 10,000 ohm 1/2 watt	.12
47	110591--Resistor - carbon 680,000 ohm 1/4 watt	.12
48	112288--Resistor - wire wound 15 ohm 1/2 watt	.12
49	R-277-A-Speaker - dynamic 8" (model 3071) / 115004--Speaker - dynamic 12" (model 3075)	7.50 / 9.50
50	110943--Cone - voice coil assem.for R-277 spkr. / 111490--Cone - voice coil assem(for115004 spkr.	1.70 / 2.50
51A - 51B	84404--Switch - phono - toggle	1.10
52A - 52B	112287--Switch - range	1.10
53	112286--Tone control - 500,000 ohms	.95
54	111243--Transformer - 1st. I.F.	2.50
55	112168--Transformer - 2nd. I.F.	1.80
56	112320--Transformer - output (for models 307-A or 307-B) / 112624--Transformer - output(for model 307-X) / 112346--Transformer - power 115volt 60 cycle / 112621--Transformer - power 115 volt 25 cycle	1.75 / 1.80 / 5.00 / 8.50
57	112625--Transformer - power 100 to 240 volt, 25 to 133 cycle	10.40
58A - 58B	112285--Volume control - 1 meg.(on-off switch)	1.15
59	89709--Terminal Strip - phono.	.15

PRICES SUBJECT TO CHANGE WITHOUT NOTICE

MODELS 3071 to 3079 incl.
Chassis R-307
Trimmers, Alignment, Parts
Dial Data

FIRESTONE TIRE & RUBBER CO.

SERVICE DATA FOR AIR CHIEF MODELS 3071 to 3079

STOCK NOS. 7423-2, 7423-3, 7406-2

The model R-307 chassis, is a seven tube, three band superheterodyne receiver.. It has an intermediate frequency of 465 KC. and tuning ra 525 KC. to 18,100 KC.

ALIGNMENT EQUIPMENT & PROCEDURE

For alignment, an output meter and an accurately calibrated signal generator with a tuning range from 465 KC. to 18 MC. are require

1. Connect the output meter across the voice coil or between the plate of the 6K6G tube and ground, depending on the type of meter. (Th more sensitive type should be connected across the voice coil.)
2. Connect the ground lead of the signal generator to the chassis of the receiver.
3. Turn the volume control to the maximum volume position and keep it in this position throughout the entire alignment procedure.
4. With the gang condenser in full mesh set the pointer on the black horizontal line across the dial face.

IMPORTANT:- THE BROADCAST BAND MUST BE ALIGNED AFTER THE SHORT-WAVE BAND AND POLICE BAND.

DUMMY ANT. IN SERIES WITH SIG. GEN.	CONNECTION OF SIG. GENERATOR OUTPUT TO RECEIVER	SIGNAL GENERATOR FREQUENCY	RANGE SWITCH POSITION	RECEIVER DIAL SETTING	TRIMMER NUMBER	TRIMMER DESCRIPTION	TYPE OF ADJUSTMENT
.1 MFD CONDENSER	CONTROL GRID OF 6L7G TUBE	465 KC.	BROADCAST (Clockwise)	ANY POINT WHERE IT DOES NOT AFFECT THE SIGNAL	1 - 2	1ST I.F.	ADJUST FOR MAXIMUM OUTPUT. THEN RE-PEAT ADJUSTMENT.
					3 - 4	2ND I.F.	
400 OHM CARBON RESISTOR	ANTENNA TERMINAL	465 KC.	BROADCAST (Clockwise)	ANY POINT WHERE IT DOES NOT AFFECT THE SIGNAL	5	WAVE TRAP	ADJUST FOR MIMIMUM OUTPUT USING A STRONG GENERATOR SIGNAL.
400 OHM CARBON RESISTOR	ANTENNA TERMINAL	16 MC.	SHORT-WAVE (Counter-clockwise)	16 MC.	6	SHORT-WAVE OSCILLATOR	ADJUST TO BRING IN SIGNAL. CHECK TO SEE IF PROPER PEAK WAS OBTAINED BY TUNING IN IMAGE AT APPROX. 15.1 KC. IF IMAGE DOES NOT APPEAR REALIGN AT 16 MC. WITH TRIMMER SCREW FARTHER OUT. RECHECK IMAGE.
400 OHM CARBON RESISTOR	ANTENNA TERMINAL	16 MC.	SHORT-WAVE (Counter-clockwise)	TUNE TO 16 MC. GENERATOR SIGNAL	7	SHORT-WAVE ANTENNA	ADJUST FOR MAXIMUM OUTPUT. TRY TO INCREASE OUTPUT BY DETUNING TRIMMER AND RETUNING RECEIVER DIAL UNTIL MAX-IMUM OUTPUT IS OBTAINED.
400 OHM CARBON RESISTOR	ANTENNA TERMINAL	5.0 MC.	POLICE (Center)	5.0 MC.	8	POLICE OSCILLATOR	ADJUST TO BRING IN SIGNAL. CHECK TO SEE IF PROPER PEAK WAS OBTAINED BY TUNING IN IMAGE AT APPROX. 4.1 MC. IF IMAGE DOES NOT APPEAR REALIGN AT 5.0 MC. WITH TRIMMER SCREW FARTHER OUT. RECHECK IMAGE.
400 OHM CARBON RESISTOR	ANTENNA TERMINAL	5.0 MC.	POLICE (Center)	TUNE TO 5.0 MC. GENERATOR SIGNAL	9	POLICE ANTENNA	ADJUST FOR MAXIMUM OUTPUT. TRY TO INCREASE OUTPUT BY DETUNING TRIMMER AND RETUNING RECEIVER DIAL UNTIL MAX-IMUM OUTPUT IS OBTAINED.
400 OHM CARBON RESISTOR	ANTENNA TERMINAL	1500 KC.	BROADCAST (Clockwise)	1500 KC.	10	BROADCAST OSCILLATOR (Shunt)	ADJUST TRIMMER TO BRING IN SIGNAL.
400 OHM CARBON RESISTOR	ANTENNA TERMINAL	1500 KC.	BROADCAST (Clockwise)	TUNE TO 1500 KC. GEN.SIG.	11	ANTENNA	ADJUST FOR MAXIMUM OUTPUT.
					12	DETECTOR	
400 OHM CARBON RESISTOR	ANTENNA TERMINAL	600 KC.	BROADCAST (Clockwise)	TUNE TO 600 KC. GENERATOR SIGNAL	13	BROADCAST OSCILLATOR (Series Pad)	ADJUST FOR MAXIMUM OUTPUT. TRY TO INCREASE OUTPUT BY DETUNING TRIMMER AND RETUNING RECEIVER DIAL UNTIL MAX-IMUM OUTPUT IS OBTAINED.

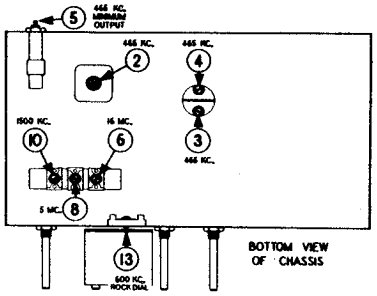

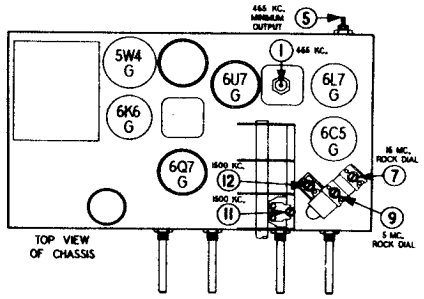

DIAL DRIVE & MISCELLANEOUS PARTS

PART NUMBER	DESCRIPTION	LIST PRICE
112304	Band indicator - assembly	$ .28
110830	Bolt - chassis mtg. #10 x 1	.03
112298	Bracket - dial mounting	.16
88810	Bushing - rubber mounting	.03
112309	Cable & Plug - for tuning eye	.65
110487	Clamp - spkr. mtg. (for 277 spkr.)	.06
89912	Clip - tube grounding	.02
110808	Clip - for tuning eye support	.14
111302	Cord - dial drive (6 ft. lengths)	.30
111274	Drum & Bushing - for dial drive	.10
112265	Escutcheon - with celluloid window	2.10
112474	Escutcheon - for tuning eye	.35
112424	Knob - for any control	.18
112293	Mounting plate - for drive mechanism	.70
12349	Nut - spkr. mtg. (#8-32) per C	.45
112297	Planetary drive - on tuning shaft	2.00

PART NUMBER	DESCRIPTION	LIST PRICE
110496	Plug - speaker	.12
112392	Pointer - dial	.22
112200	Scale - dial	1.50
88161	Shield - tube, section (short)	.08
88162	Shield - tube, section (long)	.08
88164	Shield - tube cap	.06
89911	Shield - tube base	.04
111085	Sleeve - felt (for tuning eye)	.03
85427	Socket - octal base	.15
110501	Socket - speaker	.16
111008	Socket - dial lamp	.12
111357	Spring - dial cord tension	.03
85785	Terminal Strip - G-A	.15
67568	Washer - embossed (for mtg. 89937 elec.cond.)	.05
77223	Washer - spkr. mtg. (277 spkr.)	.01
89746	Washer - for back of knobs	.005
110829	Washer - flat steel mounting	.01

PRICES SUBJECT TO CHANGE WITHOUT NOTICE

©John F. Rider, Publisher

AIR CHIEF

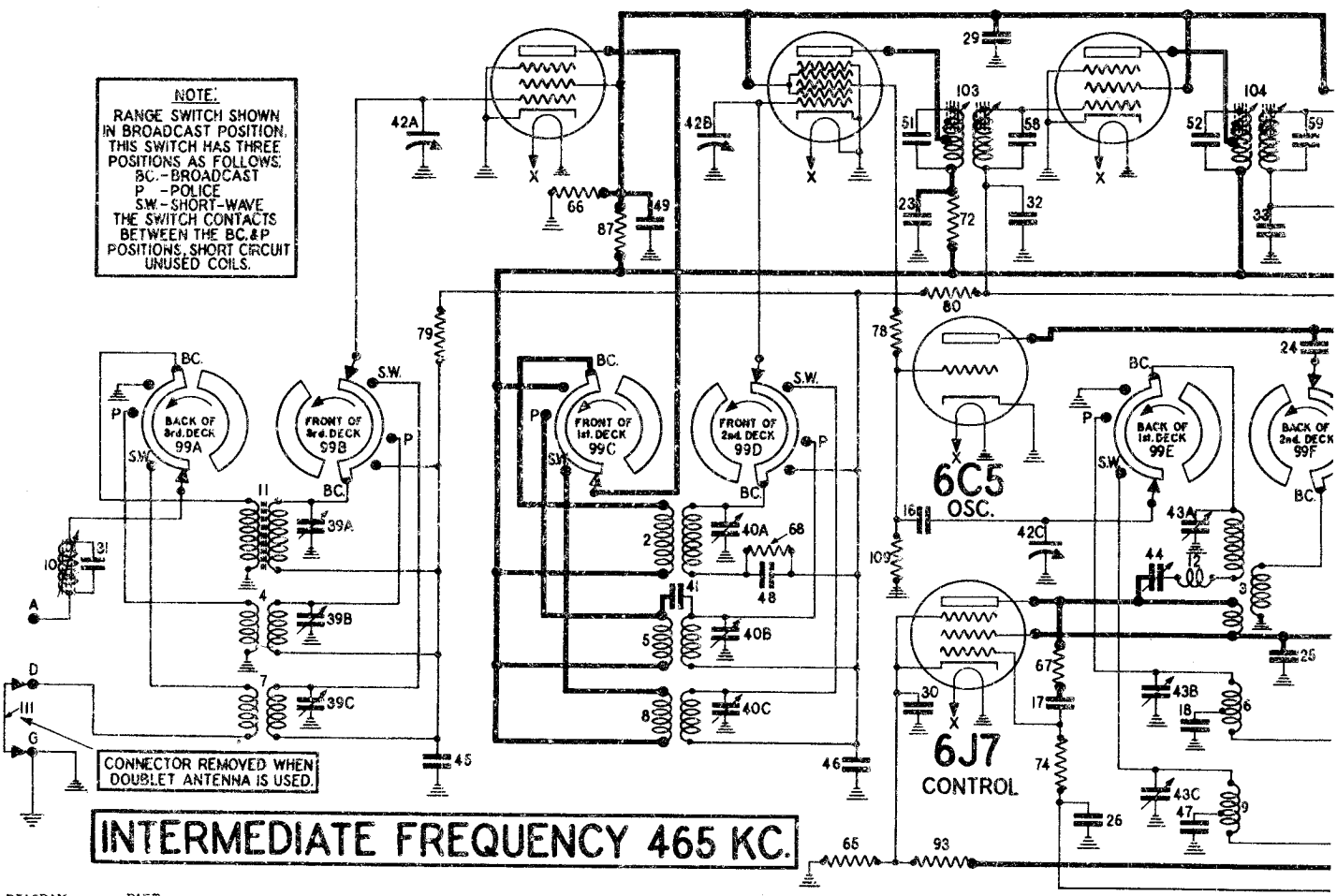

DIAGRAM NUMBER	PART NUMBER	DESCRIPTION	LIST PRICE
1	112097	Choke - filter	1.40
2	111056	Coil - R.F. (broadcast)	1.25
3	111057	Coil - oscillator (broadcast)	1.05
4	111058	Coil - antenna (police)	.80
5	111059	Coil - R.F. (police)	1.05
6	111060	Coil - oscillator (police)	1.00
7	111062	Coil - antenna (short-wave)	.90
8	111063	Coil - R.F. (short-wave)	.90
9	111064	Coil - oscillator (short-wave)	.85
10	111079	Coil - antenna trap	1.20
11	111103	Coil - antenna (broadcast)	1.82
12	111486	Coil - compensating inductance	.38
13-14	83539	Condenser - mica 250 mmfd.	.20
15-108	83783	Condenser - mica 110 mmf.	.20
16	85061	Condenser - mica 51 mmfd.	.15
17	85394	Condenser - mica 510 mmf.	.25
18	85467	Condenser - mica 1370 mmfd. (3%)	.30
19	86026	Condenser - paper .02 mfd. 400 volt	.25
20-21-22, 23-24-25	86030	Condenser - paper .01 mfd. 400 volt	.25
26	86046	Condenser - paper .1 mfd. 150 volt	.25
27	86165	Condenser - paper .006 mfd. 600 volt	.25
28	86169	Condenser - paper .05 mfd. 200 volt	.25
29	86191	Condenser - paper .1 mfd. 300 volt	.25
30	86193	Condenser - paper .25 mfd. 150 volt	.35
31	86205	Condenser - mica 2100 mmfd.	.35
32-33	88534	Condenser - paper .05 mfd. 150 volt	.25
34-110	86662	Condenser - paper .1 mfd. 400 volt	.25
35	89937	Condenser - elect. 30 mfd. 450 volt	1.60
36-37-38	110377	Condenser - elect. 10 mfd. 25 volt	.80
39A to C, 40A to C	111078	Condenser - trimmer (3 section)	.75
41	111080	Condenser - 3 mmfd. (wire)	.10
42A to C	112464	Condenser - variable gang	6.25
43A to C	111089	Condenser - trimmer (3 section) for oscillator (all bands)	.75
44	111115	Condenser - pad (single section)	.63
45-46	111117	Condenser - low loss .05 mfd. 150 volt	.35
47	111122	Condenser - mica 3580 mmfd. (3%)	.48
48	111123	Condenser - mica 7750 mmfd. (5%)	.85
49-50	111296	Condenser - elect. 4 mfd. 200 volt	.75
51-52-53	111342	Condenser - mica 200 mmfd. (5%)	.18
54A-54B	111384	Condenser - shielded (Section A-.02 mfd. 600 volt) (Section B-.03 mfd. 600 volt)	.85
55-56	111469	Condenser - elect. 16 mfd. 450 volt	1.30

SEE OPPOSITE SIDE FOR OTHER PARTS

PRICES SUBJECT TO CHANGE WITHOUT NOTICE

DIAGRAM NUMBER	PART NUMBER	DESCRIPTION	LIST PRICE
57A-57B	111501	Condenser - dual shielded (Section A-.012 mfd. 1000 volt) (Section B-.012 mfd. 1000 volt)	.70
58-59-60	111575	Condenser - mica 220 mmfd. (5%)	.20
61-62-63-64	112636	Lamp dial (frosted) 6-8 volt .25 amp.	.25
65	88460	Resistor - wire wound 150 ohm 1/2 watt	.12
66	110551	Resistor - carbon 15,000 ohm 1 watt (10%	.15
109	110552	Resistor - carbon 47,000 ohm 1/4 watt	.12
67	110599	Resistor - carbon 56,000 ohm 1/4 watt (10%)	.12
68	110553	Resistor - carbon 220,000 ohm 1/4 watt	.12
69-70	110554	Resistor - carbon 1 meg. 1/4 watt	.12
71-72-73	110557	Resistor - carbon 4700 ohm 1/4 watt	.12
74-75-76-77	110559	Resistor - carbon 470,000 ohms 1/4 watt	.12
78	110560	Resistor - carbon 100 ohm 1/4 watt	.12
79-80-81, 82-83	110564	Resistor - carbon 100,000 ohm 1/4 watt	.12
84	110566	Resistor - carbon 33,000 ohms 1/4 watt	.12
85	110570	Resistor - carbon 2.2 meg. 1/4 watt	.15
86	110572	Resistor - carbon 4700 ohm 1/4 watt(10%)	.12
87	110575	Resistor - carbon 12,000 ohm 2 watt	.30
88	110578	Resistor - carbon 68,000 ohm 1/4 watt	.12
89	110580	Resistor - carbon 3.3 meg. 1/4 watt	.12
90	110592	Resistor - carbon 22,000 ohm 1 watt	.12
91	110593	Resistor - carbon 18,000 ohm 3 watt	.20
92	110594	Resistor - carbon 390,000 ohm 1/4 watt	.12
93	110595	Resistor - carbon 12,000 ohm 3 watt	.20
94	111514	Resistor - wire wound 170 ohm 2 watt	.15
95	111515	Resistor - wire wound 27 ohm 1/2 W. (5%)	.12
	112447	R.F. unit - complete (with gang and range switch)	30.00
96	115005	Speaker - dynamic 12 inch	9.50
97	111490	Cone - voice coil assembly for 12' spkr.	2.30
98	112687	Switch - mute contact on dial mechanism	.15
99A to F	111077	Switch - range and bracket	3.30
100	112442	Switch - tone control	.45
101A-101B	112443	Switch - off-on A.F.C. manual	1.00
102	111074	Transformer - output	1.85
103-104	111336	Transformer - 1st I.F. or 2nd	2.70
105	111340	Transformer - I.F. discriminator	2.70
106	112385	Transformer - power (115 volt-60 cycle)	8.40
	112540	Transformer - power (115 volt-25 cycle)	12.00
107	112441	Volume control (1 megohm)	.95
108	83783	Condenser - mica 110 mmf.	.20
109	110552	Resistor - carbon 47,000 ohm 1/4 watt	.12
110	88682	Condenser - paper .1 mfd. 400 volt	.25
111	85321	Connector - ground	.01

©John F. Rider, Publisher

& RUBBER CO.

MODEL 3085
Chassis R-308
Schematic, Socket
Voltage, Parts

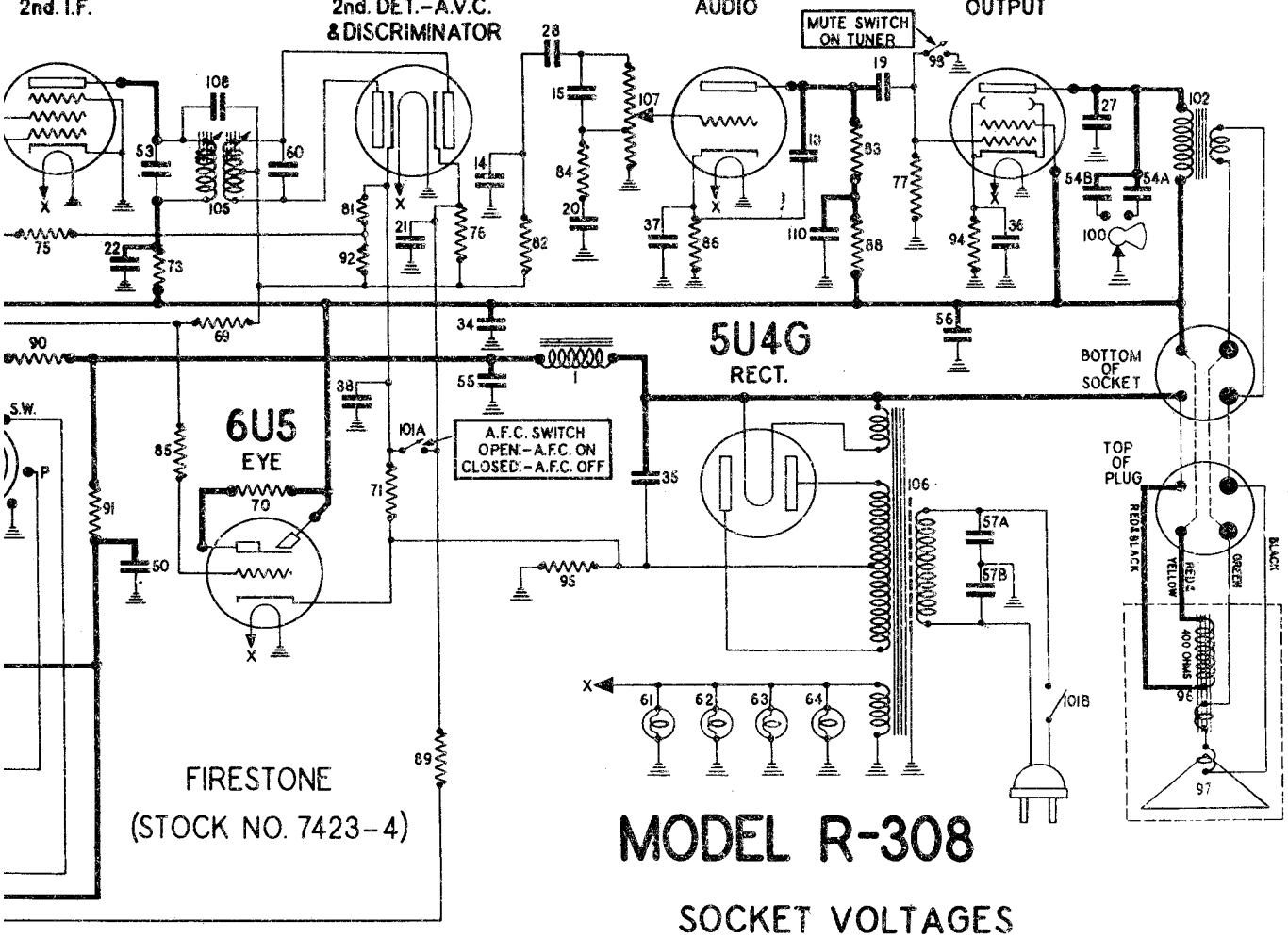

MODEL R-308

SOCKET VOLTAGES

ANTENNA GROUNDED — DIAL TUNED TO 520 K.C.

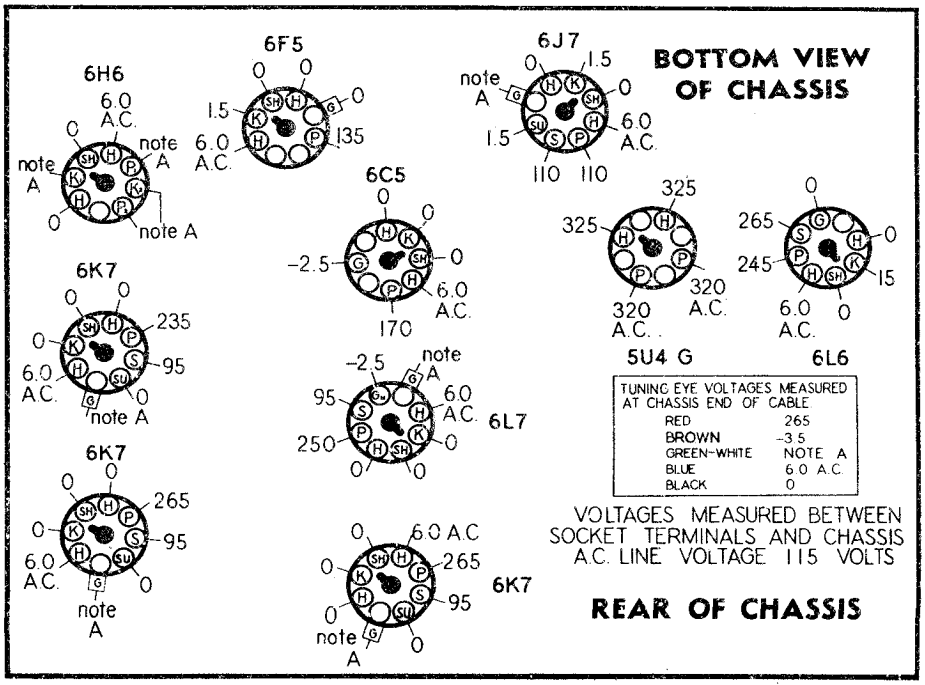

VOLTAGE CHART NOTES

IMPORTANT:- Use a high resistance voltmeter of 1000 ohms per volt.

NOTE A: The bias for the control grids of the 6L7, 6K7 R.F., 6K7 first I.F., 6K7 second I.F., and the diode plates of the 6H6 2nd detector and discriminator is -3.5 volts measured across resistor 95.

RECEIVER
MODEL 3085

AFC Test, Trimmers
Tuner, Parts

FIRESTONE TIRE & RUBBER CO.

MODEL 3085
Chassis R-308

TESTING THE A.F.C. SYSTEM.

Connect the antenna and tune in a powerful local station. See that the A.F.C. switch is in the center position. (A.F.C.-off)

Next, detune the receiver dial until the music or speech becomes somewhat distorted. Throw the A.F.C. switch into the A.F.C.-on (clockwise) position. This should improve the quality of the program being received.

Similarly detune the receiver in the opposite direction, with A.F.C. switch in center position. Place A.F.C. switch in clockwise position and again check for improved quality of reception.

It will be noted that the correction for mistuning afforded by the A.F.C. system is not as marked at stations near the low frequency end of the dial scale as it is at the higher broadcast frequencies. This is characteristic of A.F.C. systems. However, if throwing the A.F.C. switch into the extreme clockwise position has no effect on the signal, or if it corrects for mistuning in one direction only, check the receiver as follows:

1. Re-align I.F., broadcast band, and discriminator trimmers.

2. Check all tubes in the receiver. Defective 6H6 and 6J7 tubes, also the RF., 1st. Detector and I.F. tubes may cause poor A.F.C. action.

3. If the above procedure fails to remedy the defect in A.F.C. action, check the entire A.F.C. circuit itself for possible troubles.

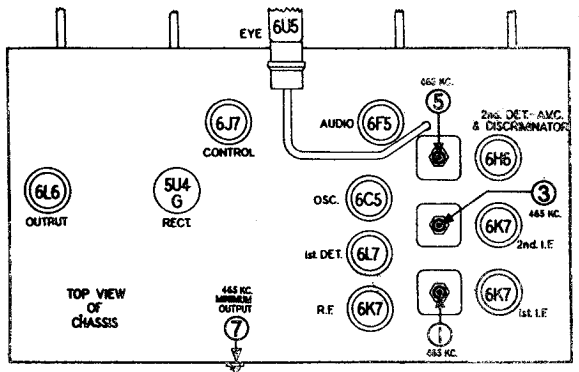

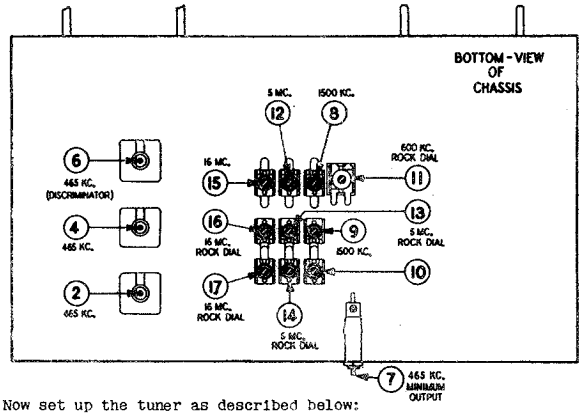

MODEL R-3085

HOW TO SET UP THE DIALMATIC TUNER.

Let the receiver warm up for half an hour before attempting adjustments. Place the "A.F.C.-ON-OFF" switch in the manual (center) position.

Observe the illustration below, and select ten favorite nearby stations of such a frequency that each will fall within the frequency range determined by the figure below. Each button can be set to only one station; therefore if two stations fall within the tuning range of any one button a choice must be made between them.

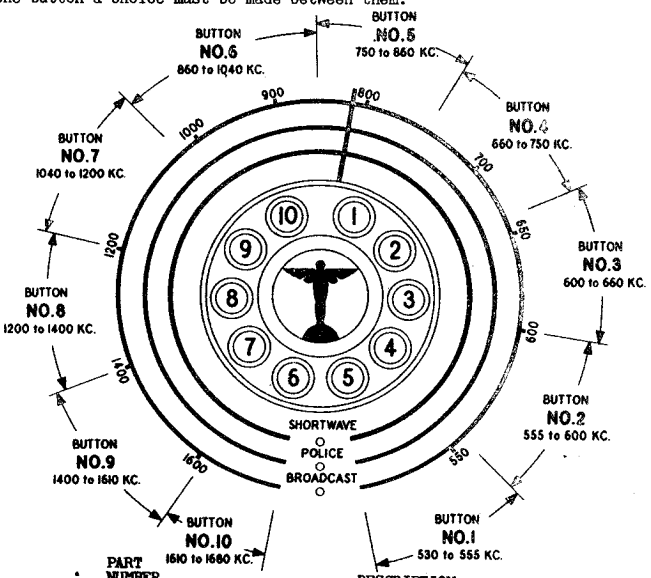

Now set up the tuner as described below:

1. Insert the tabs bearing the call letters of the selected stations, into the proper buttons, and cover them with the celluloid covers provided.

2. Push in the button you wish to set up and, keeping the button depressed, turn the dial in such a direction that the button with your finger on it will reach the bottom point of the dial before the station pointer does. After the pointer reaches the stop, keep it depressed since it must not be released until step No. 5 is completed.

3. After the button stops at the bottom position of the dial, keep it pushed in and twist the button itself to the left (counter-clockwise) for about one whole turn. IMPORTANT: Before tuning in the station as explained in operation No. 4 you must allow the button to come out just enough so that a program or interstation noise can be heard. Then proceed exactly as outlined below, using the tuning eye to indicate correct tuning even though the station can be heard. NOTE: Do not allow the button to come all the way out.

4. Keeping the button depressed, as explained above, tune in the station you desire to set up. Watch the tuning eye for an indication of correct tuning. The set is correctly tuned when the inverted "V" shaped shadow is the narrowest.

5. After the station has been tuned-in, proceed to lock up the button as follows; Still keeping the button depressed, place the left hand on the dial and grasp the other buttons firmly so that the mechanism will not move. Then turn the cap of the button, which is to be locked up, to the right (clockwise) until it is tight. YOU MAY NOW RELEASE THE BUTTON and it should spring out to its normal position. If the button does not return to its normal position it indicates that one of the adjacent buttons is set up too close to the one in question. To correct the condition, release the adjacent button by unscrewing it and changing its setting.

6. AFTER THE BUTTON BEING SET UP, COMES OUT TO ITS NORMAL POSITION, YOU HAVE COMPLETED THE SET-UP OF THAT PARTICULAR BUTTON TO THE STATION FOR WHICH YOU LABELED IT.

7. Proceed to set up all of the remaining buttons in a similar manner.

8. After all the buttons have been correctly set up to your list of desired stations you can now operate your "Dialmatic Tuner" without having to tune in a station with the tuning knob of the receiver.

DIAL DRIVE & MISCELLANEOUS PARTS.

PART NUMBER	DESCRIPTION	LIST PRICE
112690	Arm - stop (for Dialmatic buttons)	.12
112691	Arm - stationary (for locking dialmatic buttons)	.06
112453	Band Indicator - assembly complete	.60
112696	Belt - dial drive	.25
111261	Bolt - chassis mtg. (#14 x 1-1/4)	.02
88831	Bracket - range shaft support	.02
88921	Bracket - steel, for mtg. tuning eye	.04
111260	Bushing - rubber (for chassis mtg.)	.06
112692	Button - 2nd shaft (for Dialmatic tuner)	.16
112677	Clips - dial scale mounting	.02
112446	Cable - and plug (for tuning eye)	.80
88922	Collar - steel, for mtg. tuning eye	.05
85321	Connector - ground	.01
112452	Dial - and drive assembly complete	17.00
112694	Escutcheon - brass (center-emblem)	1.20
112474	Escutcheon - for eye	.35
112525	Escutcheon - for dial (outer edge)	1.45
112686	Flexible coupler - for drive shaft	.75
112680	Frame - for dialmatic tuner	1.80
112501	Knob - for tone, tuning, volume range	.18
112502	Knob - for A.F.C. control	.22
112446	Link - and lever assembly (for range switch)	.24
112685	Mounting plate - for dialmatic buttons	1.50
110496	Plug - speaker (4 prong)	.12
112693	Pointer - dial	.17
112688	Pulley - for belt drive on drive shaft	.12
112684	Retaining ring - for main drive shaft	.01
84214	Retaining ring - for shaft	.02
112681	Scale - dial	1.30
112682	Shaft - drive	.18
112698	Shaft - and gear (gang condenser drive)	1.00
112451	Shaft - for range switch drive	.08
85427	Socket - octal base	.15
110501	Socket - 4 prong (for spkr.)	.16
110627	Socket - dial lamp	.12
112695	Spring - for dialmatic buttons	.04
112689	Spring - and pulley (for belt idler)	.16
112679	Spring - for gates dialmatic	.04
112687	Switch - mute contact on dial mechanism	.15
112669	Tabs - call letter sheets	.60
112670	Tab - celluloid (for push button)	.02
85066	Terminal Strip - G.D.A.	.20
112678	Washer - for flexible coupler mounting	.01
112683	Washer - phosphar bronze (at rear of flex.cplr.)	.05
67568	Washer - embossed (for mtg. 89937 electrolytic)	.05
89027	Washer - spring type	.01
111262	Washer - flat steel mtg. (15/16" O.D.)	.02
112697	Window - celluloid (for dial)	1.25

©John F. Rider, Publisher

MODEL 3085
Chassis R-308
Alignment

FIRESTONE TIRE & RUBBER CO.

SERVICE DATA FOR AIR CHIEF MODEL 3085 STOCK NO. 7423-4

The model R-308 chassis, is a ten tube, three band superheterodyne receiver. It has an intermediate frequency of 465 KC. and a tuning range of 525 KC. to 18,100 KC.

ALIGNMENT EQUIPMENT & PROCEDURE

For alignment, an output meter and an accurately calibrated signal generator with a tuning range from 465 KC. to 18 MC. are required.

① With the gang condenser in full mesh, the dial pointer should coincide with the 525 KC. (or first) division on the low frequency end of the Broadcast Band scale. If it does not, loosen the set screws on the flexible coupler, close the gang completely, then turn the tuning knob until the pointer is set correctly. Retighten the set screws.

② Connect the output meter across the voice coil or between the plate of the 6L6 tube and ground, depending upon the type of meter used. (The more sensitive type should be connected across the voice coil.)

③ Connect the ground lead of the signal generator to the chassis of the receiver and leave it there throughout the alignment procedure.

④ Turn the volume control to the maximum volume position and keep it in this position throughout the entire alignment procedure. The tone control should be in the clockwise (brilliant) setting at all times.

IMPORTANT: ALLOW RECEIVER TO WARM UP 15 MINUTES BEFORE ALIGNING. A.F.C.- ON - OFF SWITCH MUST BE IN CENTER (NON-A.F.C.) POSITION EXCEPT WHERE OTHER POSITION IS SPECIFIED.

DUMMY ANT. IN SERIES WITH SIG. GEN.	CONNECTION OF SIG. GENERATOR OUTPUT TO RECEIVER	SIGNAL GENERATOR FREQUENCY	RANGE SWITCH POSITION	RECEIVER DIAL SETTING	TRIMMER NUMBER	TRIMMER DESCRIPTION	TYPE OF ADJUSTMENT
.1 MFD CONDENSER	CONTROL GRID OF 6L7 TUBE	465 KC.	BROADCAST (Counter-clockwise)	ANY POINT WHERE IT DOES NOT AFFECT THE SIGNAL	1 - 2	1ST I.F.	Adjust for maximum output. Then repeat adjustment.
					3 - 4	2ND I.F.	
					5	3RD I.F.	
400 OHM CARBON RESISTOR	ANTENNA TERMINAL	465 KC.	BROADCAST (Counter-clockwise)	ANY POINT WHERE IT DOES NOT AFFECT THE SIGNAL	7	WAVE TRAP	Adjust for minimum output using a strong generator signal.
400 OHM CARBON RESISTOR	ANTENNA TERMINAL	1500 KC.	BROADCAST (Counter-clockwise)	1500 KC.	8	BROADCAST OSCILLATOR (Shunt)	Adjust trimmer to bring in signal.
400 OHM CARBON RESISTOR	ANTENNA TERMINAL	1500 KC.	BROADCAST (Counter-clockwise)	TUNE TO 1500 KC. GENERATOR SIGNAL	9	BROADCAST DETECTOR	Adjust for maximum output.
					10	BROADCAST ANTENNA	
400 OHM CARBON RESISTOR	ANTENNA TERMINAL	600 KC.	BROADCAST (Counter-clockwise)	TUNE TO 600 KC. GENERATOR SIGNAL	11	BROADCAST OSCILLATOR (Series Pad)	Adjust for maximum output. Try to increase output by detuning trimmer and retuning receiver dial until maximum output is obtained.
THE A.F.C. MUST NOW BE ALIGNED. SEE "A.F.C. ALIGNMENT" BELOW THIS TABLE. FOR PROCEDURE.							
400 OHM CARBON RESISTOR	ANTENNA TERMINAL	5 MC.	POLICE (Center)	5 MC.	12	POLICE OSCILLATOR (Shunt)	Adjust to bring in signal. Check to see if proper peak was obtained by tuning in image at approx. 4.1 MC. If image does not appear realign at 5 MC. with trimmer screw farther out. Recheck image.
400 OHM CARBON RESISTOR	ANTENNA TERMINAL	5 MC.	POLICE (Center)	TUNE TO 5 MC. GENERATOR SIGNAL	13	POLICE DETECTOR	Adjust for maximum output. Try to increase output by detuning trimmer and retuning receiver dial until maximum output is obtained.
					14	POLICE ANTENNA	
400 OHM CARBON RESISTOR	ANTENNA TERMINAL	16 MC.	SHORT-WAVE (Clockwise)	16 MC.	15	SHORT-WAVE OSCILLATOR (Shunt)	Adjust to bring in signal. Check to see if proper peak was obtained by tuning in image at approx. 15.1 KC. If image does not appear realign at 16 KC. with trimmer screw farther out. Recheck image.
400 OHM CARBON RESISTOR	ANTENNA TERMINAL	16 MC.	SHORT-WAVE (Clockwise)	16 MC.	16	SHORT-WAVE DETECTOR	Adjust for maximum output. Try to increase output by detuning trimmer and retuning receiver dial until maximum output is obtained.
					17	SHORT-WAVE ANTENNA	

A.F.C. ALIGNMENT.

IMPORTANT: The following adjustment must be made after every re-adjustment of the I.F. and broadcast band trimmers.

The A.F.C. Discriminator should be adjusted as follows:

1. Place the A.F.C. switch in the center (non-A.F.C.) position. Loosely couple the output of the signal generator to the 6L7 control grid by clipping the signal generator output lead to the insulation on the control grid wire, or connect to the grid clip through a 50 mmfd. mica condenser.
2. Adjust signal generator to resonance with I.F. system by tuning the signal generator dial for maximum output meter deflection. Be sure that the receiver dial is at some point where it has no tuning effect on the generator signal. Switch off the modulation.
3. With the signal generator connected and operating as in #2, connect antenna and manually tune in powerful local station in region of 1000 KC or lower. (Avoid stations around 930 KC which might beat with second harmonic of test oscillator.)
4. Adjust the receiver tuning dial to obtain zero beat between the test oscillator and the incoming signal. (A very slight adjustment is all that is required. Be careful not to tune off signal.)
5. Turn the A.F.C. switch to the extreme clockwise position. (A.F.C.-on)
6. Adjust the secondary of discriminator transformer (#6) to restore zero beat. NOTE: This trimmer should be adjusted to the point where the frequency of the beat note increases rapidly if the trimmer is turned in either direction. Other zero beat points may be found with the trimmer all the way out or all the way in, but these settings are incorrect.

If this operation has been performed correctly, turning the A.F.C. switch from center to clockwise position should not change the beat note by more than a slight rumble.

NOTE:- Where a second signal generator is available step #3 above may be varied as follows:

Connect second signal generator (set at about 1000 KC) to antenna and tune in its signal. Switch off modulation and proceed as before.

This method is somewhat preferable to the first as the zero beat setting is more easily determined when both signals are unmodulated.

©John F. Rider, Publisher

FREED MFG. CO., INC.

MODEL FE 24A
MODEL 96
MODEL FE97
Schematics

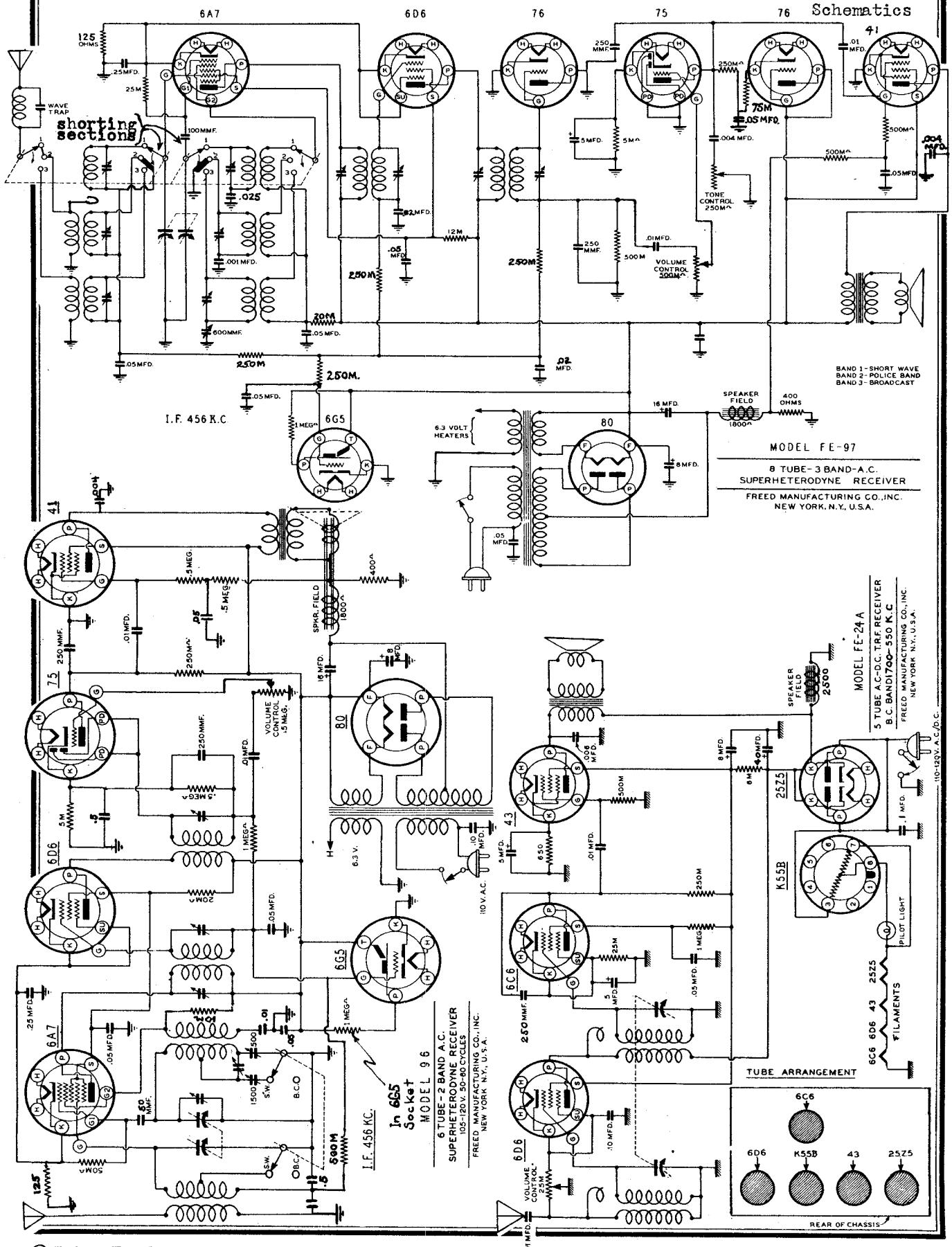

©John F. Rider, Publisher

MODEL 27-D
MODEL 30-D
Schematics

FREED MFG. CO., INC.

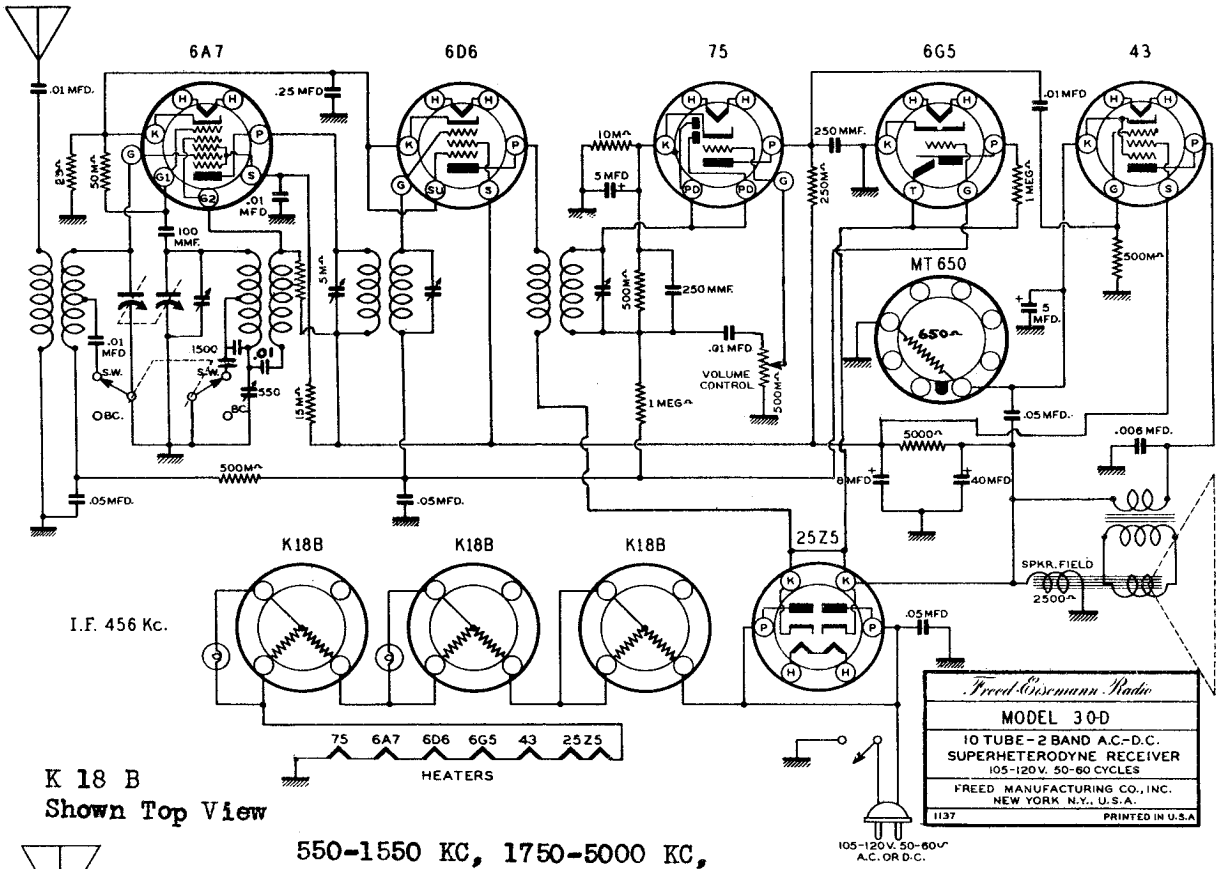

K 18 B
Shown Top View

550-1550 KC, 1750-5000 KC,
5500-18000 KC.

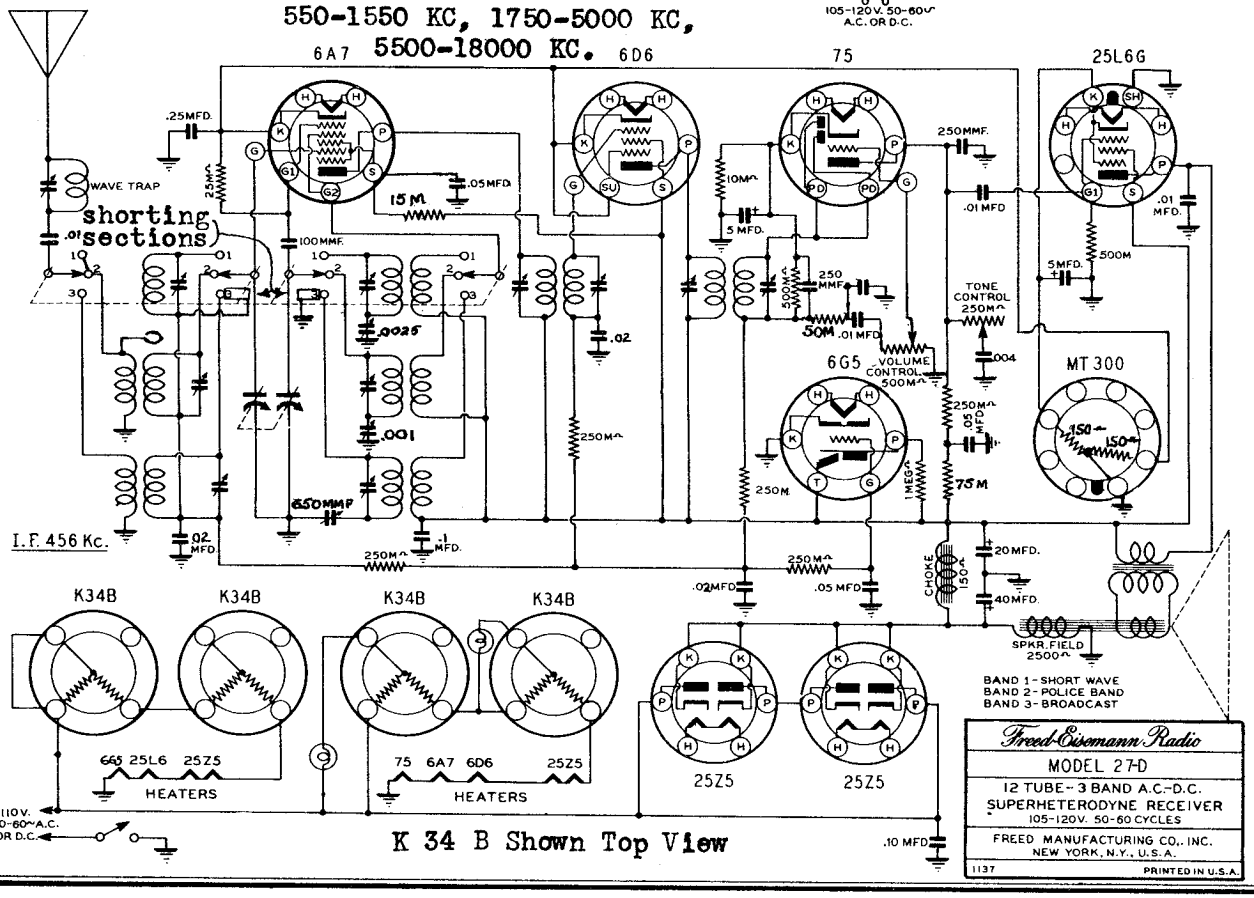

K 34 B Shown Top View

©John F. Rider, Publisher

©John F. Rider, Publisher

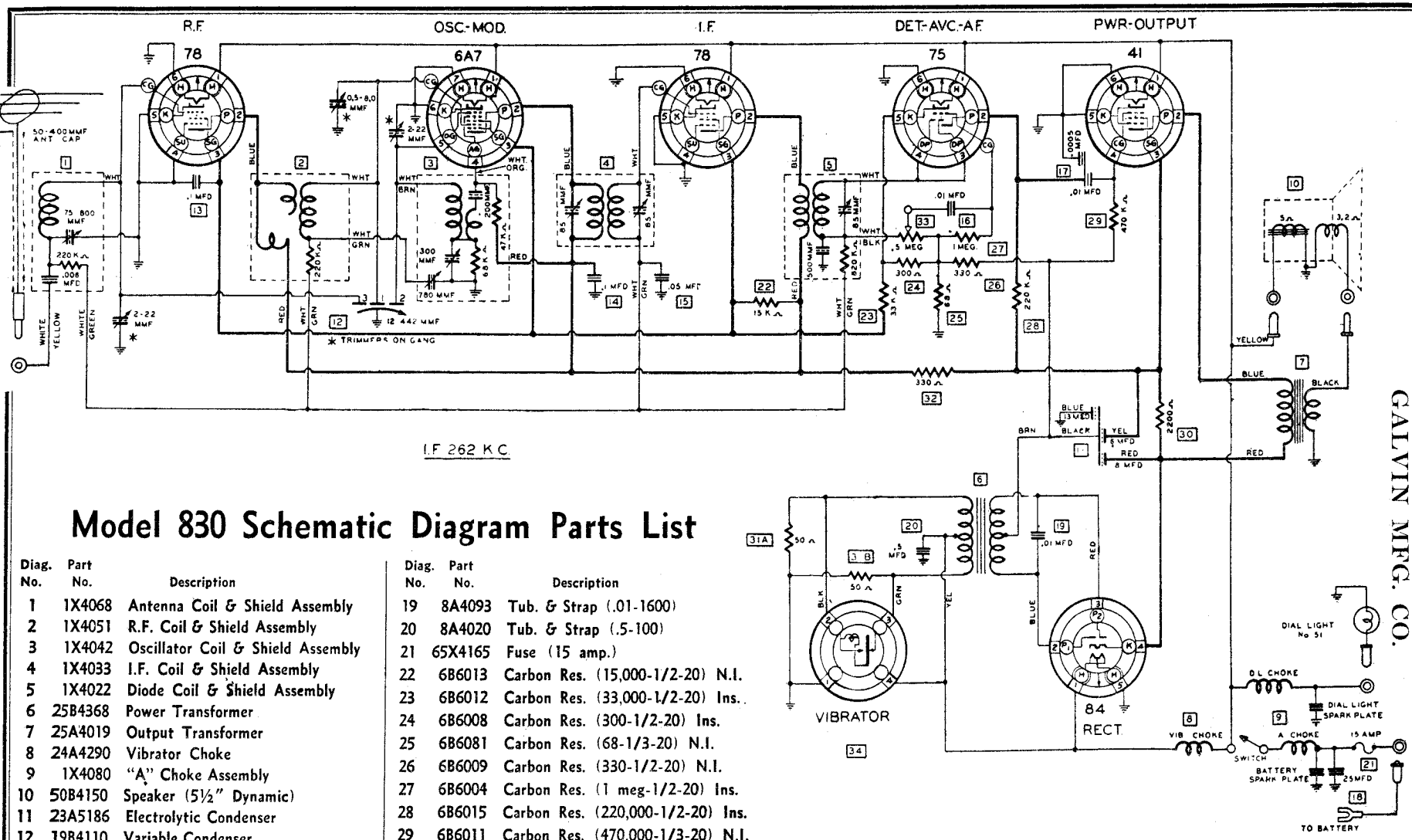

Model 830 Schematic Diagram Parts List

Diag. No.	Part No.	Description
1	1X4068	Antenna Coil & Shield Assembly
2	1X4051	R.F. Coil & Shield Assembly
3	1X4042	Oscillator Coil & Shield Assembly
4	1X4033	I.F. Coil & Shield Assembly
5	1X4022	Diode Coil & Shield Assembly
6	25B4368	Power Transformer
7	25A4019	Output Transformer
8	24A4290	Vibrator Choke
9	1X4080	"A" Choke Assembly
10	50B4150	Speaker (5½" Dynamic)
11	23A5186	Electrolytic Condenser
12	19B4110	Variable Condenser
13	8A3310	Tub. Cond. (.1-200)
14	8A4092	Tub. & Strap (.1-300)
15	8A3305	Tub. Cond. (.05-100)
16	8A1400	Tub. Cond. (.01-100)
17	8A3329	Tub. Cond. (.01-.0005-400)
18	8A4089	Tub. Cond. (.25-100)
19	8A4093	Tub. & Strap (.01-1600)
20	8A4020	Tub. & Strap (.5-100)
21	65X4165	Fuse (15 amp.)
22	6B6013	Carbon Res. (15,000-1/2-20) N.I.
23	6B6012	Carbon Res. (33,000-1/2-20) Ins.
24	6B6008	Carbon Res. (300-1/2-20) Ins.
25	6B6081	Carbon Res. (68-1/3-20) N.I.
26	6B6009	Carbon Res. (330-1/2-20) N.I.
27	6B6004	Carbon Res. (1 meg-1/2-20) Ins.
28	6B6015	Carbon Res. (220,000-1/2-20) Ins.
29	6B6011	Carbon Res. (470,000-1/3-20) N.I.
30	6B6006	Carbon Res. (2,200-1-20) N.I.
31A	6B6005	Carbon Res. (50-1/2-20) N.I.
31B	6B6005	Carbon Res. (50-1/2-20) N.I.
32	6B6010	Carbon Res. (330-1/2-20) Ins.
33	18A4046	Volume Control & Switch (.5 meg)
34	48A5333	Vibrator

Motorola
AMERICA'S FINEST AUTO RADIO
MODEL 8-30

GALVIN MFG. CO.

MODEL 8-30 Schematic Parts

FOR SERVICING DATA, SEE INDEX

MODEL 8-40
Schematic
Parts

GALVIN MFG. CO.

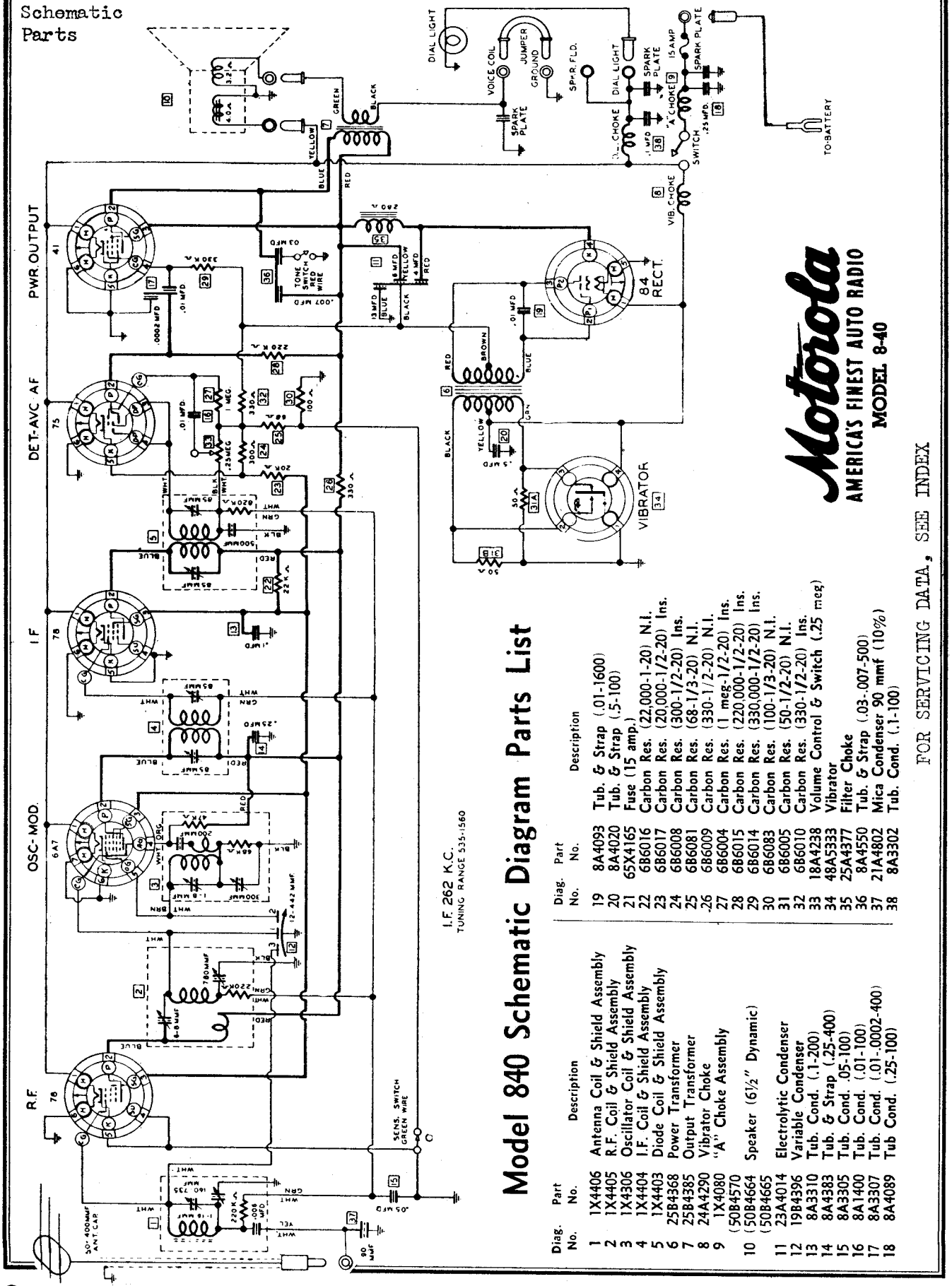

Motorola
AMERICA'S FINEST AUTO RADIO
MODEL 8-40

Model 840 Schematic Diagram Parts List

Diag. No.	Part No.	Description
1	1X4406	Antenna Coil & Shield Assembly
2	1X4405	R.F. Coil & Shield Assembly
3	1X4306	Oscillator Coil & Shield Assembly
4	1X4404	I.F. Coil & Shield Assembly
5	1X4403	Diode Coil & Shield Assembly
6	25B4368	Power Transformer
7	25B4385	Output Transformer
8	24A4290	Vibrator Choke
9	1X4080	"A" Choke Assembly
10	(50B4570 (50B4664 (50B4665	Speaker (6½" Dynamic)
11	23A4014	Electrolytic Condenser
12	19B4396	Variable Condenser
13	8A3310	Tub. Cond. (.1-200)
14	8A4383	Tub. & Strap (.25-400)
15	8A3305	Tub. Cond. .05-100)
16	8A1400	Tub. Cond. (.01-100)
17	8A3307	Tub. Cond. (.01-.0002-400)
18	8A4089	Tub Cond. (.25-100)
19	8A4093	Tub. & Strap (.01-1600)
20	8A4020	Tub. & Strap (.5-100)
21	65X4165	Fuse (15 amp.)
22	6B6016	Carbon Res. (22,000-1-20) N.I.
23	6B6017	Carbon Res. (20,000-1/2-20) Ins.
24	6B6008	Carbon Res. (300-1/2-20) Ins.
25	6B6081	Carbon Res. (68-1/3-20) N.I.
26	6B6009	Carbon Res. (330-1/2-20) N.I.
27	6B6004	Carbon Res. (1 meg-1/2-20) Ins.
28	6B6015	Carbon Res. (220,000-1/2-20) Ins.
29	6B6014	Carbon Res. (330,000-1/2-20) Ins.
30	6B6083	Carbon Res. (100-1/3-20) N.I.
31	6B6005	Carbon Res. (50-1/2-20) N.I.
32	6B6010	Carbon Res. (330-1/2-20) Ins.
33	18A4238	Volume Control & Switch (.25 meg)
34	48A5333	Vibrator
35	25A4377	Filter Choke
36	8A4550	Tub. & Strap (.03-.007-500)
37	21A4802	Mica Condenser 90 mmf (10%)
38	8A3302	Tub. Cond. (.1-100)

FOR SERVICING DATA, SEE INDEX

©John F. Rider, Publisher

©John F. Rider, Publisher

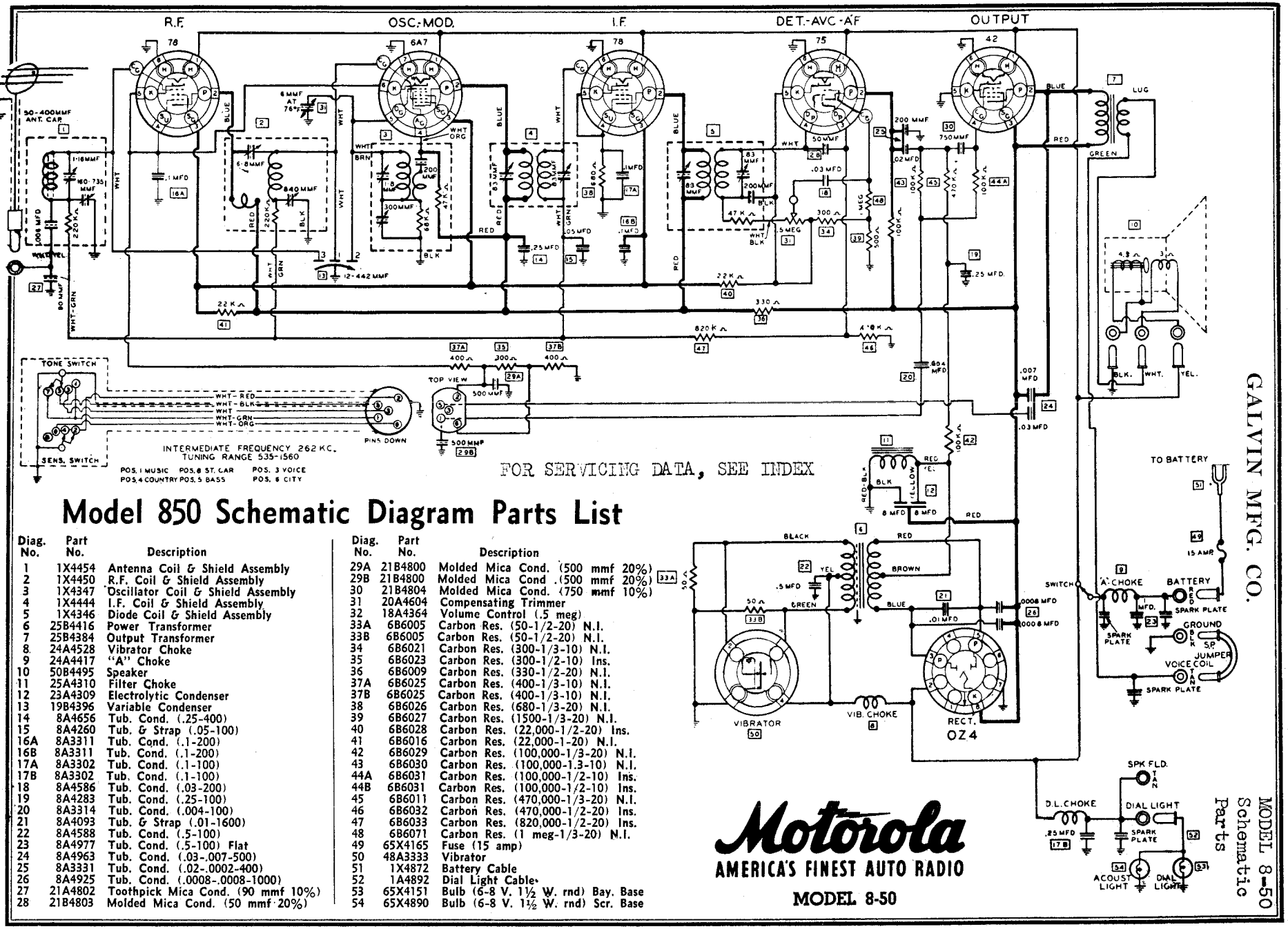

Model 850 Schematic Diagram Parts List

Diag. No.	Part No.	Description
1	1X4454	Antenna Coil & Shield Assembly
2	1X4450	R.F. Coil & Shield Assembly
3	1X4347	Oscillator Coil & Shield Assembly
4	1X4444	I.F. Coil & Shield Assembly
5	1X4346	Diode Coil & Shield Assembly
6	25B4416	Power Transformer
7	25B4384	Output Transformer
8	24A4528	Vibrator Choke
9	24A4417	"A" Choke
10	50B4495	Speaker
11	25A4310	Filter Choke
12	23A4309	Electrolytic Condenser
13	19B4396	Variable Condenser
14	8A4656	Tub. Cond. (.25-400)
15	8A4260	Tub. & Strap (.05-100)
16A	8A3311	Tub. Cond. (.1-200)
16B	8A3311	Tub. Cond. (.1-200)
17A	8A3302	Tub. Cond. (.1-100)
17B	8A3302	Tub. Cond. (.1-100)
18	8A4586	Tub. Cond. (.03-200)
19	8A4283	Tub. Cond. (.25-100)
20	8A3314	Tub. Cond. (.004-100)
21	8A4093	Tub. & Strap (.01-1600)
22	8A4588	Tub. Cond. (.5-100)
23	8A4977	Tub. Cond. (.5-100) Flat
24	8A4963	Tub. Cond. (.03-.007-500)
25	8A3331	Tub. Cond. (.02-.0002-400)
26	8A4925	Tub. Cond. (.0008-.0008-1000)
27	21A4802	Toothpick Mica Cond. (90 mmf 10%)
28	21B4803	Molded Mica Cond. (50 mmf 20%)

Diag. No.	Part No.	Description
29A	21B4800	Molded Mica Cond. (500 mmf 20%)
29B	21B4800	Molded Mica Cond. (500 mmf 20%)
30	21B4804	Molded Mica Cond. (750 mmf 10%)
31	20A4604	Compensating Trimmer
32	18A4364	Volume Control (.5 meg)
33A	6B6005	Carbon Res. (50-1/2-20) N.I.
33B	6B6005	Carbon Res. (50-1/2-20) N.I.
34	6B6021	Carbon Res. (300-1/3-10) N.I.
35	6B6023	Carbon Res. (300-1/2-10) Ins.
36	6B6009	Carbon Res. (330-1/2-20) N.I.
37A	6B6025	Carbon Res. (400-1/3-10) N.I.
37B	6B6025	Carbon Res. (400-1/3-10) N.I.
38	6B6026	Carbon Res. (680-1/3-20) N.I.
39	6B6027	Carbon Res. (1500-1/3-20) N.I.
40	6B6028	Carbon Res. (22,000-1/2-20) Ins.
41	6B6016	Carbon Res. (22,000-1-20) N.I.
42	6B6029	Carbon Res. (100,000-1/3-20) N.I.
43	6B6030	Carbon Res. (100,000-1.3-10) N.I.
44A	6B6031	Carbon Res. (100,000-1/2-10) Ins.
44B	6B6031	Carbon Res. (100,000-1/2-10) Ins.
45	6B6011	Carbon Res. (470,000-1/3-20) N.I.
46	6B6032	Carbon Res. (470,000-1/2-20) Ins.
47	6B6033	Carbon Res. (820,000-1/2-20) Ins.
48	6B6071	Carbon Res. (1 meg-1/3-20) N.I.
49	65X4165	Fuse (15 amp)
50	48A3333	Vibrator
51	1X4872	Battery Cable
52	1A4892	Dial Light Cable
53	65X4151	Bulb (6-8 V. 1½ W. rnd) Bay. Base
54	65X4890	Bulb (6-8 V. 1½ W. rnd) Scr. Base

Motorola
AMERICA'S FINEST AUTO RADIO
MODEL 8-50

©John F. Rider, Publisher

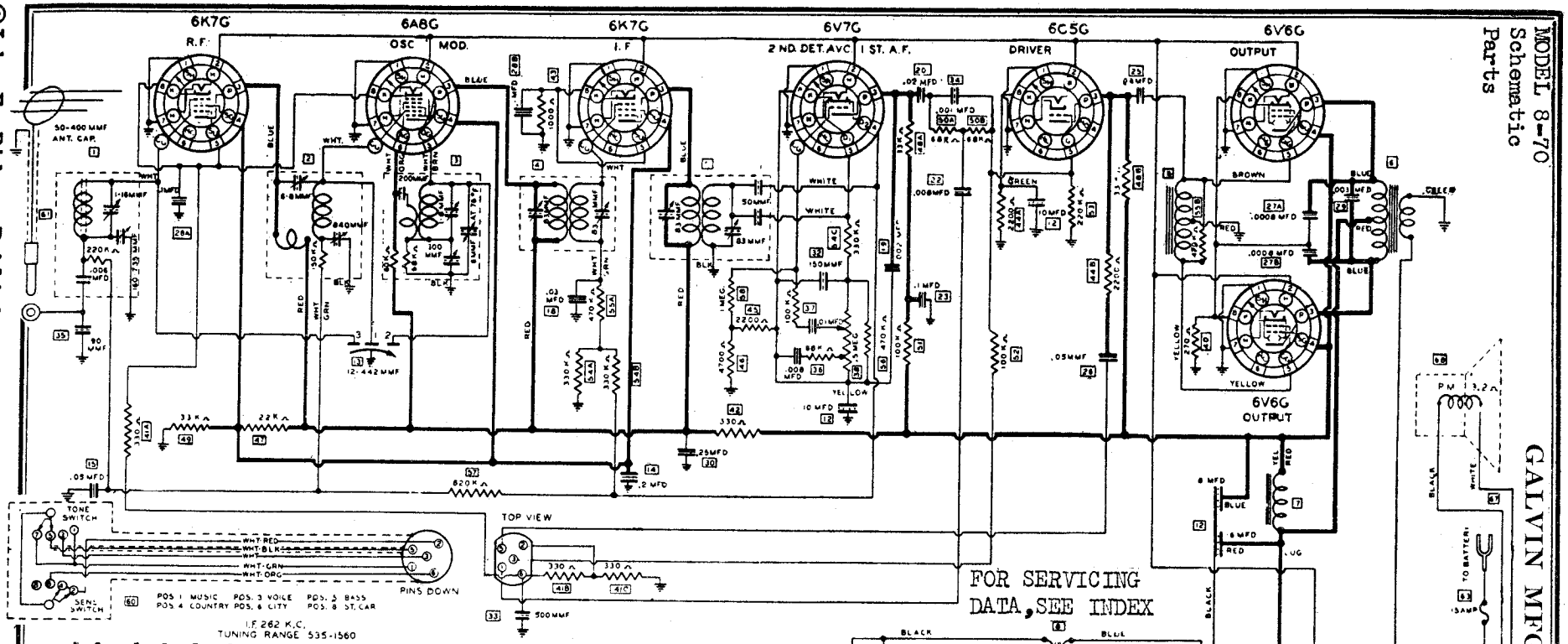

Model 870 Schematic Diagram Parts List

Diag. No.	Part No.	Description
1	1X4636	Antenna Coil & Shield Assembly
2	1X4635	R.F. Coil & Shield Assembly
3	1X4634	Oscillator Coil & Shield Assembly
4	1X4631	I.F. Coil & Shield Assembly
5	1X4630	Diode Coil & Shield Assembly
6	25B4237	Output Transformer
7	25A4239	Filter Choke
8	25B4236..	Power Transformer
9	24A4654	Vibrator Choke
10	24A4909	"A" Choke
11	25A4479	Input Choke
12	23A4571	Electrolytic Condenser
13	19B4396	Variable Condenser
14	8A4648	Tub. Cond. (.2-300)
15	8A4260	Tub. & Strap (.05-100)
16	8A4925	Tub. Cond. (Dual .0008-1000)
17	8A4977	Tub. Cond. (.5-100) Flat
18	8A4961	Tub. Cond. (.03-100)
19	8A4736	Tub. Cond. (.002-400)
20	8A3304	Tub. Cond. (.02-400)
21	8A4627	Tub. & Strap (.005-1600)
22	8A4629	Tub. & Strap (.008-400)
23	8A4647	Tub. Cond. (.1-400)
24	8A3302	Tub. Cond. (.1-100)
25	8A4117	Tub. Cond. (.03-600)
26	8A4628	Tub. & Strap (.05-600)
27A	8A4962	Tub. Cond. (.0008-1000)
27B	8A4962	Tub. Cond. (.0008-1000)

Diag. No.	Part No.	Description
28A	8A3311	Tub. Cond. (.1-200)
28B	8A3311	Tub. Cond. (.1-200)
29	8A4626	Tub. & Strap (.003-100)
30	8A4656	Tub. Cond. (.25-400)
31	8A4588	Tub. Cond. (.5-100)
32	21B4806	Molded Mica Cond. (150 mmf 20%)
33	21B4800	Molded Mica Cond. (500 mmf 20%)
34	21B4959	Molded Mica Cond. (.001-10%)
35	21A4802	Toothpick Mica Cond. (90 mmf 10%)
36	8A4649	Cond. Res. (.008-100 & 68,000)
37	8A4650	Cond. Res. (.01-200 & 100,000)
38	18A4204	Volume Control & Switch (.5 meg)
39A	6B6005	Carbon Res. (50-1/2-20) Glo
39B	6B6005	Carbon Res. (50-1/2-20) N.I.
40	6B6035	Carbon Res. (270-1-10) N.I.
41A	6B6022	Carbon Res. (330-1/2-10) Ins.
41B	6B6022	Carbon Res. (330-1/2-10) Ins.
41C	6B6022	Carbon Res. (330-1/2-10) Ins.
42	6B6010	Carbon Res. (330-1/2-20) Ins.
43	6B6086	Carbon Res. (1000-1/3-10) N.I.
44A	6B6072	Carbon Res. (2200-1/3-20) N.I.
44B	6B6072	Carbon Res. (2200-1/3-20) N.I.
45	6B6085	Carbon Res. (2200-1/3-10) N.I.
46	6B6080	Carbon Res. (4700-1/2-10) Ins.
47	6B6041	Carbon Res. (22,000-3-20) N.I.
48A	6B6012	Carbon Res. (33,000-1/2-20) Ins.
48B	6B6012	Carbon Res. (33,000-1/2-20) Ins.
49	6B6082	Carbon Res. (33,000-1-20) N.I.

Diag. No.	Part No.	Description
50A	6B6079	Carbon Res. (68,000-1/3-10) N.I.
50B	6B6079	Carbon Res. (68,000-1/3-10) N.I.
51	6B6075	Carbon Res. (100,000-1/2-20) Ins.
52	6B6030	Carbon Res. (100,000-1/3-10) N.I.
53	6B6003	Carbon Res. (220-000-1/3-20) N.I.
54A	6B6014	Carbon Res. (330,000-1/2-20) Ins.
54B	6B6014	Carbon Res. (330,000-1/2-20) Ins.
54C	6B6014	Carbon Res. (330,000-1/2-20) Ins.
55A	6B6032	Carbon Res. (470,000-1/2-20) Ins.
55B	6B6032	Carbon Res. (470,000-1/2-20) Ins.
56	6B6011	Carbon Res. (470,000-1/3-20) N.I.
57	6B6033	Carbon Res. (820-1/2-20) Ins.
58	6B6071	Carbon Res. (1 meg-1/3-20) N.I.
59	48A3333	Vibrator

Diag. No.	Part No.	Description
60	1X4520	Acoustinator complete
61	1X4469	Antenna Cable
62	1X4288	Battery Lead complete
63	65X4637	Fuse (20 amp)
64	1A4892	Dial Light Assembly
65	65X4151	Bulb (6-8 V 1½ W rnd) Bay. Base
66	65X4890	Bulb (6-8 V 1½ W rnd) Scr. Base
67	30A3199	Speaker Cable (2 cond. 36")
	(50B4605	
68	(50B4994	Speaker only (less Cable & Housing)
	(50B4995	

GALVIN MFG. CO.

MODEL 8-60
Schematic
MODELS 8-30,8-40,8-50,
8-60,8-70,8-80
Sensitivity and Gain Notes

FOR PARTS AND SERVICING DATA, SEE INDEX

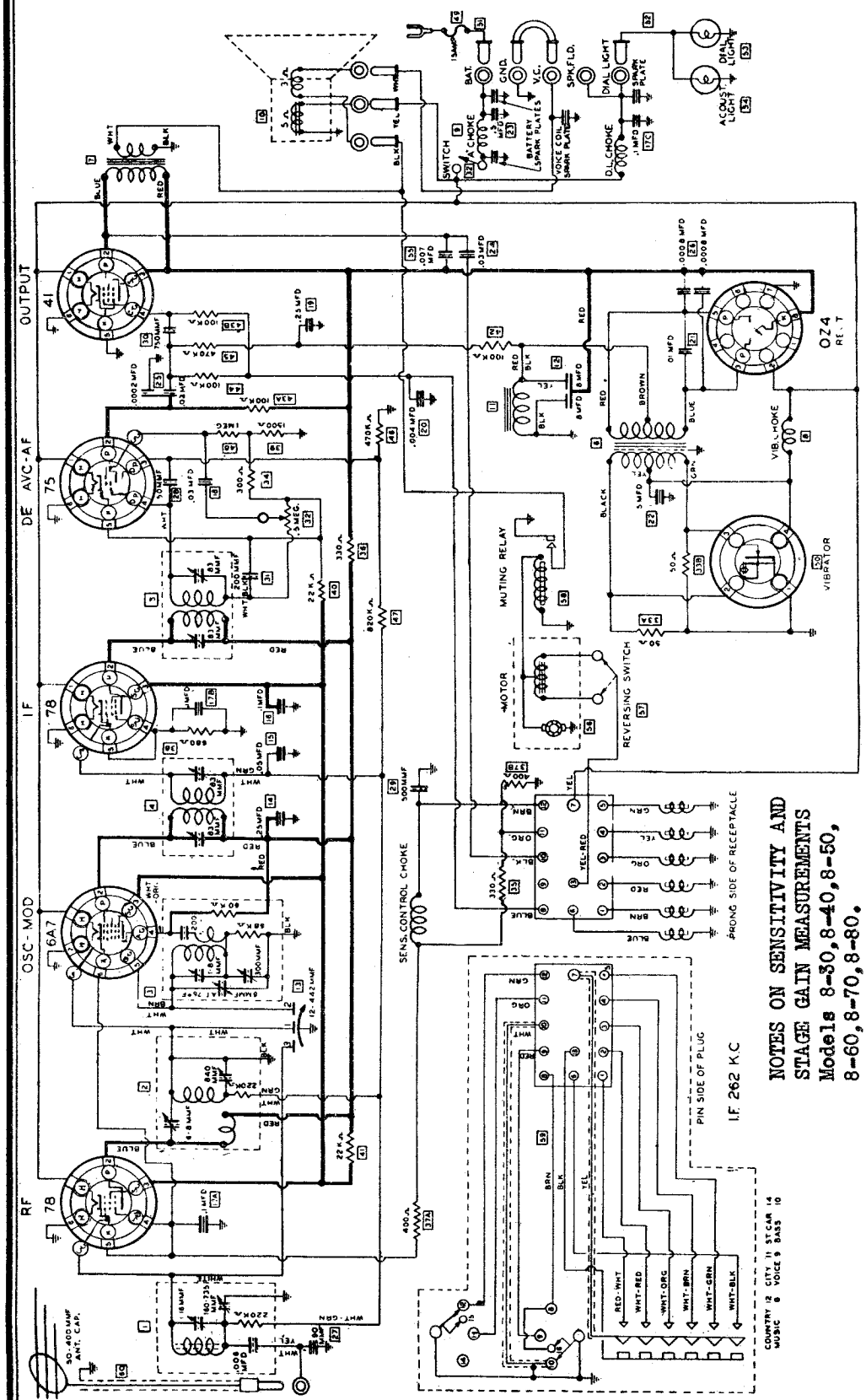

NOTES ON SENSITIVITY AND STAGE GAIN MEASUREMENTS

Models 8-30, 8-40, 8-50, 8-60, 8-70, 8-80.

These stage gain measurements will, if properly used, enable you to localize trouble quickly. They are intended for use with a signal generator that is accurately calibrated in microvolts.

Starting with the second detector—first audio stage, and working back step by step to I.F., Osc.-Mod., R.F. and finally to the antenna terminal, the circuit in which the trouble exists will quickly be determined by evidence of low gain, when signal generator attenuation readings are compared to the normal values as shown in the tables.

All stage-gain measurements must be made with the volume control set for full volume. The shielded lead from the signal generator is connected to the top grid terminal of the tube through a .1 MF condenser, with a 500M Ohm resistor connected as a leak resistance between the grid of the tube and the grid cap which has been removed (See Fig. 3 on Page 4.)

When measuring over-all sensitivity at the antenna terminal, use a .00015 MF condenser in place of the .1 MF.

It must be remembered that the figures in the table are average and allowance must be made for variations between two sets of the same general type, due to difference of tube characteristics, etc.

NOTE:—Readings on 8-50, 8-60, 8-70, and 8-80 should be taken with Acoustinator set at "Country" and "Voice" positions.

Motorola
SCHEMATIC DIAGRAM
MODEL 8-60

FOR SENSITIVITY AND GAIN MEASUREMENTS, SEE INDEX

©John F. Rider, Publisher

MODEL 8-60
Parts
MODELS 8-30, 8-40, 8-50
8-60, 8-70, 8-80
Tuner Notes, Part 1

GALVIN MFG. CO.

AUTOMATIC SERVICE NOTES

FAILS TO RETAIN ORIGINAL SETTING

1. MAGNETS NOT LOCKED SECURELY. The lock nuts must be pulled down securely, otherwise, the shock of the sudden stopping of the latch bar will tend to slide them away from the original setting.
2. ORIGINAL SETTING NOT ACCURATE. It is extremely difficult to set the stations to the exact center of the carrier, by ear alone. A tuning meter is recommended. Resetting of magnets may be necessary after several days' use, during which time the mechanism goes through a "shaking down" process.
3. ELECTRICAL DRIFT. This is usually the result of a great change in temperature. Automatic compensation is provided in the circuit to take care of the normal operating temperature range. Before making original setting, turn the set on and permit it to play long enough to arrive at a constant operating temperature. In zero weather do not expect the set to tune "on the nose" until after a constant temperature has been reached. In severe cases of electrical drift occurring at normal operating temperature, change the compensating trimmer. This is located in the oscillator can in Models 8-60, 8-70, and Golden Voice. In Model 8-50, it is mounted on the condenser gang.
4. DEFECTIVE LATCH BAR. Inspect latch bar. If springs are bent or if the gap is too large, the mechanism will not tune accurately.

FAILS TO STOP AT MAGNET

1. OPEN MAGNET WINDING. Check for continuity and replace if necessary.
2. MAGNET CONTACT IN ACOUSTINATOR NOT CLOSING. Open Acoustinator and inspect contacts. Adjust or clean if necessary.
3. ROUNDED HEAD ON MAGNET CORE. The head of the magnet should have sharp corners. Rounded corners may cause the latch bar to slip going in one direction, although it will usually catch in the reverse direction.
4. LATCH BAR DEFECTIVE. Inspect latch bar to make sure that it has not been damaged. Replace latch bar and gear assembly, if required.
5. POOR CONTACT AT ACOUSTINATOR PLUG. A poor contact here means a voltage drop which reduces the pulling power of the magnet.
6. IMPROPER SPACING OF LATCH BAR. Check the spacing between the latch bar and the magnet. It should be somewhere between ten and twenty thousandths of an inch. If the spacing is greater the pulling power of the magnet is reduced.

MOTOR TURNS BUT TUNING MECHANISM DOES NOT

1. GEARS FAIL TO MESH. Check all gears to see that they are properly meshed.
2. MANUAL TUNING GEAR SLIPS. If the manual tuning gear assembly does not have enough tension between the fibre motor drive gear and the brass manual tuning gear, the motor will spin without turning the rest of the mechanism. Replace manual tuning gear assembly if necessary.

LATCH BAR STICKS ON MAGNET POLE

1. MANUAL TUNING SHAFT BINDS. Binding in the tuning control shaft causes the latch bar to press hard against one side of the magnet and may prevent it from releasing as the magnet is de-energized.
2. LATCH BAR SPRING WEAK. Check latch bar tension, to make sure it is pulling away from the magnet with sufficient force.
3. MAGNET CONTACT IN ACOUSTINATOR STUCK. Check the magnet switch in the Acoustinator to make sure it breaks contact when pressure is released on the button. Check for frozen contact points, or for sticking Acoustinator button.
4. ARMATURE RIVET WORN. There is a brass rivet at the tip of the armature, to prevent the armature freezing to the magnet. If this rivet is worn down, permitting the steel armature to actually touch the magnet pole, it may freeze in that position.
5. ROUGH SIDES ON MAGNET POLE. Inspect sides of magnet. If rigid or grooved, the latch bar may catch and fail to release.

Model 8-60 Schematic Diagram Parts List

Diag. No.	Part No.	Description
1	1X4950	Antenna Coil & Shield Assembly
2	1X4953	R.F. Coil & Shield Assembly
3	1X4954	Oscillator Coil & Shield Assembly
4	1X4956	I.F. Coil & Shield Assembly
5	1X4955	Diode Coil & Shield Assembly
6	25B4608	Power Transformer
7	25B4235	Output Transformer
8	24A4798	Vibrator Choke
9	24A4126	"A" Choke
10	50B4445 or 50B4201	Speaker (6" dynamic)
11	25A4886	Filter Choke
12	23A4309	Electrolytic Condenser
13	19B4507	Variable Condenser
14	8A4656	Tub. Cond. (.25-400)
15	8A3305	Tub. Cond. (.05-100)
16	8A3311	Tub. Cond. (.1-200)
17A	8A3302	Tub. Cond. (.1-100)
17B	8A3302	Tub. Cond. (.1-100)
17C	8A3302	Tub. Cond. (.1-100)
18	8A3303	Tub. Cond. (.03-100)
19	8A4283	Tub. Cond. (.25-100)
20	8A3314	Tub. Cond. (.004-100)
21	8A4722	Tub. & Strap (.01-1600)
22	8A4568	Tub. Cond. (.5-100)
23	8A4977	Tub. Cond. (.5-100) flat
24	8A4128	Tub. Cond. (.03-500)
25	8A4061	Tub. Cond. (.02-.0002-400)
26	8A4925	Tub. Cond. (dual .0008-1000)
27	21A4802	Toothpick Mica Cond. (90 mmf 10%)
28	21B4803	Molded Mica Cond. (50 mmf 20%)
29	21B4800	Molded Mica Cond. (500 mmf 20%)
30	21B4804	Molded Mica Cond. (750 mmf 10%)
31	21B4808	Molded Mica Cond. (200 mmf 20%)
32	18A4885	Volume Control & Switch (.5 meg)
33A	6B6005	Carbon Res. (50-1/2-20) N.I.
33B	6B6005	Carbon Res. (50-1/2-20) N.I.
34	6B6023	Carbon Res. (300-1/2-10) Ins.
35	6B6042	Carbon Res. (330-1/3-10) N.I.
36	6B6032	Carbon Res. (330-1/2-20) Ins.
37A	6B6025	Carbon Res. (400-1/3-10) N.I.
37B	6B6025	Carbon Res. (400-1/3-10) N.I.
38	6B6026	Carbon Res. (680-1/3-20) N.I.
39	6B6027	Carbon Res. (1500-1/3-20) N.I.
40	6B6028	Carbon Res. (22,000-1/2-20) Ins.
41	6B6016	Carbon Res. (22,000-1-20) N.I.
42	6B6029	Carbon Res. (100,000-1/3-20) N.I.
43A	6B6031	Carbon Res. (100,000-1/2-10) Ins.
43B	6B6031	Carbon Res. (100,000-1/2-10) Ins.
44	6B6030	Carbon Res. (100,000-1/2-10) N.I.
45	6B6011	Carbon Res. (470,000-1/3-20) N.I.
46	6B6032	Carbon Res. (470,000-1/2-20) Ins.
47	6B6033	Carbon Res. (820,000-1/2-20) Ins.
48	6B6071	Carbon Res. (1 meg-1/3-20) N.I.
49	65X4165	Fuse (15 amp)
50	48A3333	Vibrator
51	1X4872	Battery Cable
52	1K4166	Dial Light Cable
53	65X4151	Bulb (6-8 V. 1½ W. rnd) Bay. Base
54	65X4874	Bulb (6-8 V. frosted) Scr. Base
55	8A2289	Tub. Cond. (.007-500)
56	59B4792	Motor
57	40A4774	Reversing Switch
58	1X4913	Muting Relay Assembly
59	1X4960	Acoustinator Assembly
60	1X4469	Antenna Cable

©John F. Rider, Publisher

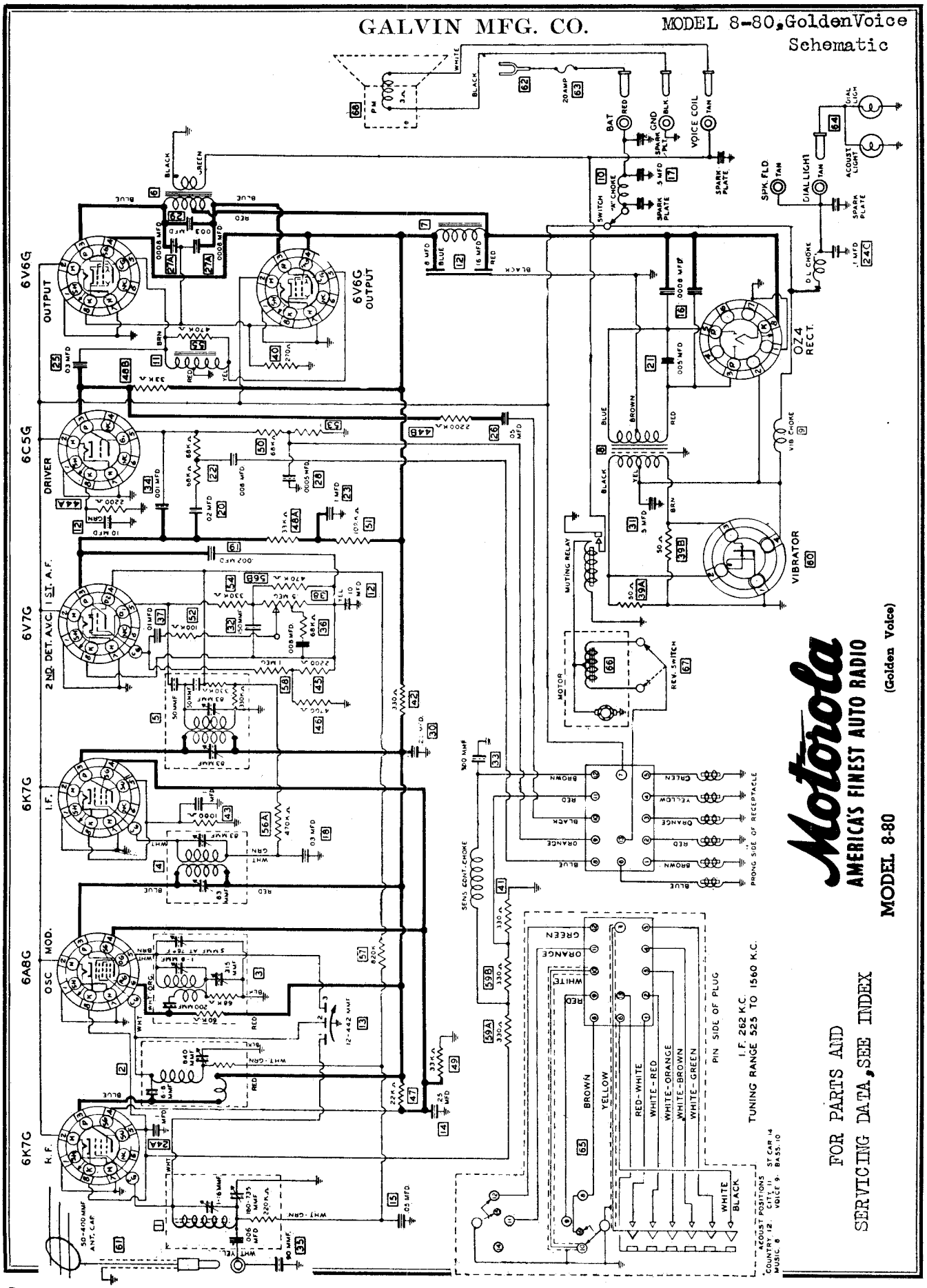

©John F. Rider, Publisher

MODEL 8-80
Parts
MODELS 8-30,8-40,8-50
8-60,8-70,8-80
Tuner Notes, Part 2

GALVIN MFG. CO.

AUTOMATIC SERVICE NOTES

BUTTONS STICK

1. BURR ON BUTTON. Remove the button from the Acoustinator and look for a tenite burr along one of the edges. Scrape the edges smooth with a pen knife. NOTE:—When removing the button, if you will press in on the adjacent button at the same time you are pulling out on the one to be removed, you will find that it comes out easily.

MOTOR FAILS TO START

1. MOTOR CONTACTS IN ACOUSTINATOR NOT CLOSING. Open the Acoustinator and inspect the motor contacts. If the gap is too great, contact will not be made when the button is pressed. Adjust by bending carefully.
2. POOR CONTACT AT ACOUSTINATOR PLUG. Inspect the contacts between the Acoustinator plug and the receptacle on the chassis.
3. DEFECTIVE REVERSING SWITCH. A defective switch would prevent the voltage from reaching the motor winding.
4. OPEN CIRCUIT IN MOTOR. Check all connections to motor and check motor winding for continuity.
5. MOTOR BRUSHES NOT MAKING CONTACT. Check contact between brushes and commutator.
6. LOW BATTERY VOLTAGE. A weak or defective battery in the car would not deliver sufficient voltage to start the motor.
7. FLEXIBLE TUNING SHAFT BINDS. Binding in the flexible tuning shaft places an additional load on the motor. If this load is too great, it will prevent the motor from turning the mechanism.
8. MAGNET FAILS TO RELEASE. If the magnet which has previously been energized, fails to release the latch bar for any reason, the motor cannot turn the mechanism.

MOVES FROM STATION AFTER BUTTON HAS BEEN RELEASED

1. MANUAL TUNING GEAR SLIPPING. This assembly is so constructed that a small amount of slippage will occur between the fibre motor drive gear and the brass manual tuning gear. The purpose of this design is to absorb the shock of stopping the motor quickly when a station is tuned. If the tension between the two gears is weak, the motor will not stop, but continues to spin slowly after the station has been tuned. When the magnet releases the latch bar, as the finger is removed from the button, the momentum of the motor pulls the condenser gang a little beyond the station. To remedy this condition install a new manual tuning gear assembly.

MOTOR FAILS TO REVERSE

1. DEFECTIVE REVERSING SWITCH. Replace if required.
2. LEADS TO REVERSING SWITCH CROSSED. Reverse leads.

MECHANISM RUNS SLUGGISHLY

1. LOW BATTERY VOLTAGE. A weak or defective battery will not deliver sufficient voltage to turn the motor at normal speed.
2. HIGH RESISTANCE CONTACT IN ACOUSTINATOR. High resistance at the Acoustinator contacts will cause a voltage drop which will prevent the motor from turning at normal speed.
3. POOR CONTACT BETWEEN ACOUSTINATOR PLUG AND RECEPTACLE. This will also result in voltage drop, and lessened motor power.
4. BINDING IN TUNING SHAFT. Binding in the flexible tuning shaft will place an additional load on the motor which can slow it down considerably. Install tuning shaft with minimum amount of bending and check alignment where the tuning shaft enters the receiver housing.
5. GEAR BEARINGS RUNNING DRY. The manual tuning gear and the large gear bearings must be properly lubricated. Because of the wide variation in temperatures encountered between summer and winter driving, special lubricants should be used. Use Motorola Ice Machine Oil, Part No. 11M 5057. Do not use ordinary machine oils. They will not stand zero temperatures.

Model 8-80 Schematic Diagram Parts List

Diag. No.	Part No.	Description
1	1X4725	Antenna Coil & Shield Assembly
2	1X4723	R.F. Coil & Shield Assembly
3	1X4720	Oscillator Coil & Shield Assembly
4	1X4715	I.F. Coil & Shield Assembly
5	1X4712	Diode Coil & Shield Assembly
6	25B4594	Output Transformer
7	25A4739	Filter Choke
8	25B4924	Power Transformer
9	24A4613	Vibrator Choke
10	24A4693	"A" Choke
11	25A4923	Input Choke
12	23A4662	Electrolytic Condenser
13	19B4507	Variable Condenser
14	8A4732	Tub. Cond. (.25-300)
15	8A3305	Tub. Cond. (.05-100)
16	8A4925	Tub. Cond. (dual .0008-1000)
17	8A4977	Tub. Cond. (.5-100) flat
18	8A3303	Tub. Cond. (.03-100)
19	8A4736	Tub. Cond. (.002-400)
20	8A3304	Tub. Cond. (.02-400)
21	8A4627	Tub. & Strap (.005-1600)
22	8A4734	Cond. Res. (.008-400&2 68,000)
23	8A4647	Tub. Cond. (.1-400)
24A	8A3302	Tub. Cond. (.1-100)
24B	8A3302	Tub. Cond. (.1-100)
24C	8A3302	Tub. Cond. (.1-100)
25	8A4117	Tub. Cond. (.03-600)
26	8A4628	Tub. & Strap (.05-600)
27A	8A4962	Tub. Cond. (.0008-1000)
27B	8A4962	Tub. Cond. (.0008-1000)
28	8A1946	Tub. Cond. (.0005-100)
29	8A4626	Tub. & Strap (.003-1000)
30	8A4656	Tub. Cond. (.25-400)
31	8A4588	Tub. Cond. (.5-100)
32	21B4806	Molded Mica Cond. (150 mmf 20%)
33	21B4803	Molded Mica Cond. (500 mmf 20%)
34	21B4959	Molded Mica Cond. (.001 mfd 10%)
35	21A4802	Toothpick Mica Cond. (90 mmf 10%)
36	8A4649	Cond. Res. (.008-100&1 68,000)
37	8A1400	Tub. Cond. (.01-100)
38	18A4740	Volume Control & Switch (.5 meg)
39A	6B6005	Carbon Res. (50-1/2-20) N.I.
39B	6B6005	Carbon Res. (50-1/2-20) N.I.
40	6B6035	Carbon Res. (270-1-10) N.I.
41	6B6022	Carbon Res. (330-1/2-10) Ins.
42	6B6010	Carbon Res. (330-1/2-20) Ins.
43	6B6086	Carbon Res. (1000-1/3-10) N.I.
44A	6B6072	Carbon Res. (2200-1/3-20) N.I.
44B	6B6072	Carbon Res. (2200-1/3-20) N.I.
45	6B6085	Carbon Res. (2200-1/3-10) N.I.
46	6B6080	Carbon Res. (4700-1/2-10) Ins.
56	6B6080	Carbon Res. (4700-1/2-10) Ins.
47	6B6041	Carbon Res. (22,000-3-20) N.I.
48A	6B6012	Carbon Res. (33,000-1/2-20) Ins.
48B	7B6012	Carbon Res. (33,000-1/2-20) Ins.
49	6B6082	Carbon Res. (33,000-1/2-20) N.I.
50	6B6079	Carbon Res. (68,000-1/3-10) N.I.
51	6B6029	Carbon Res. (100,000-1/3-20) N.I.
52	6B6075	Carbon Res. (100,000-1/2-20) Ins.
53	6B6030	Carbon Res. (100,000-1/3-10) N.I.
54	6B6014	Carbon Res. (330,000-1/2-20) Ins.
55	6B6032	Carbon Res. (470,000-1/2-20) Ins.
56A	6B6011	Carbon Res. (470,000-1/3-20) N.I.
56B	6B6011	Carbon Res. (470,000-1/3-20) N.I.
57	6B6000	Carbon Res. (820,000-1/3-20) N.I.
58	6B6071	Carbon Res. (1 meg-1/3-20) N.I.
59A	6B6042	Carbon Res. (330-1/3-10) N.I.
59B	6B6042	Carbon Res. (330-1/3-10) N.I.
60	48A3333	Vibrator
61	1X4469	Antenna Cable
62	1X4288	Battery Cable
63	65X4637	Fuse (20 amp)
64	1K4166	Dial Light Cable
65	1X4960	Acoustinator (complete)
66	59B4792	Motor
67	40A4774	Reversing Switch
68	50B4605	Speaker only (less cable and housing)
	50B4994	Speaker only (less cable and housing)
	50B4995	Speaker only (less cable and housing)

©John F. Rider, Publisher

©John F. Rider, Publisher

SOCKET VOLTAGES

Numerals refer to socket terminal as indicated on circuit diagram.

MODEL 8-30				Current 6.3 Amp.			Max. Pwr. Output 3.0 Watts		
TUBE	POSITION	1	2	3	4	5	6	7	8
78	RF	6.0	175	80	0	0	0	..	..
6A7	Osc.-Mod.	6.0	175	80	95	9.3	0	0	..
78	IF	6.0	175	80	0	0	0	..	..
75	Det.-AVC-AF	6.0	70	1.8	1.8	2.4	0	..	..
41	Output	6.0	230	185	.6	0	0	..	..
84	Rect.	6.0	295 AC	295 AC	245	0	..	..	..
MODEL 8-40				**Current 6.5 Amp.**			**Max. Pwr. Output 3.1 Watts**		
78	RF	6.0	220	60	0	0	0	..	..
6A7	Osc.-Mod.	6.0	220	60	105	21	0	0	..
78	IF	6.0	220	60	0	0	0	..	..
75	AF-Det.-AVC	6.0	85	1.6	1.6	1.6	0	..	..
41	Output	6.0	220	225	.6	0	0	..	..
84	Rect.	6.0	290 AC	290 AC	245	0	..	..	..
MODELS 8-50 AND 8-60				**Current 6.5 Amp.**			**Max. Pwr. Output 3.6 Watts**		
78	RF	6.0	225	75	0	4.0	0	..	..
6A7	Osc.-Mod.	6.0	225	75	115	15	4.0	0	..
78	IF	6.0	225	75	0	3.0	0	..	..
75	AF-Det.-AVC	6.0	125	0	.2	5.5	0	..	..
41 or 42	Output	6.0	215	225	.4	0	0	..	..
0Z4	Rect.	..	6.0	295 AC	..	295 AC	..	0	230
MODELS 8-70 AND 8-80				**Current 8.5 Amp.**			**Max. Pwr. Output 13 Watts**		
6K7G	RF	0	0	255	90	0	X	6.0	4.0
6A8G	Osc.-Mod.	0	6.0	255	90	9.4	120	0	4.0
6K7G	IF	0	0	255	90	4.4	X	6.0	4.4
6V7G	Det.-AVC	0	0	50	0	.2	X	6.0	7.0
6C5G	AF	..	0	150	X	0	X	6.0	5.6
6V6G	Output	0	0	255	255	0	X	6.0	15.0
0Z4	Rect.	0	0	300 AC	X	300 AC	X	6.0	260

"X" indicates socket terminals used as dummy tie points.

All readings except rect. plates are from chassis ground to socket terminal indicated. Measurements made with 1000 ohms per volt meter. Voltage at Battery—6.3 V. Voltage at Receiver—6.0 V.

SENSITIVITY AND STAGE GAIN MEASUREMENTS

SEE NOTE WITH SCHEMATIC OF MODEL 8-60

Average Microvolt Input ★	Generator Set at	Generator Feeder Connected to	Dummy Antenna Capacity	Leak Resistance	Output Meter Reading ★★
		MODEL 8-30			
.25 Volts	400 Cycles	75 Grid	.1 MF	.5 Meg	1.73 Volts
25,000	262 K.C.	78 Grid(I.F.)	.1 MF	.5 Meg	1.73 Volts
700	262 K.C.	6A7 Grid	.1 MF	.5 Meg	1.73 Volts
800	600 K.C.	6A7 Grid	.1 MF	.5 Meg	1.73 Volts
45	600 K.C.	78 Grid(R.F.)	.1 MF	.5 Meg	1.73 Volts
3	600 K.C.	Ant. Lead	.00015 MF	None	1.73 Volts
		MODEL 8-40			
.25 Volts	400 Cycles	75 Grid	.1 MF	.5 Meg	1.73 Volts
20,000	262 K.C.	78 Grid(I.F.)	.1 MF	.5 Meg	1.73 Volts
600	262 K.C.	6A7 Grid	.1 MF	.5 Meg	1.73 Volts
700	600 K.C.	6A7 Grid	.1 MF	.5 Meg	1.73 Volts
30	600 K.C.	78 Grid(R.F.)	.1 MF	.5 Meg	1.73 Volts
1.5	600 K.C.	Ant. Lead	.00015 MF	None	1.73 Volts
		MODELS 8-50 AND 8-60			
.2 Volts	400 Cycles	75 Grid	.1 MF	.5 Meg	1.73 Volts
16,000	262 K.C.	78 Grid(I.F.)	.1 MF	.5 Meg	1.73 Volts
400	262 K.C.	6A7 Grid	.1 MF	.5 Meg	1.73 Volts
500	600 K.C.	6A7 Grid	.1 MF	.5 Meg	1.73 Volts
20	600 K.C.	78 Grid(R.F.)	.1 MF	.5 Meg	1.73 Volts
1.5	600 K.C.	Ant. Lead	.00015 MF	None	1.73 Volts
		MODELS 8-70 AND 8-80			
.15 Volts	400 Cycles	6V7G	.1 MF	.5 Meg	1.73 Volts
14,000	262 K.C.	6K7G(I.F.)	.1 MF	.5 Meg	1.73 Volts
300	262 K.C.	6A8G	.1 MF	.5 Meg	1.73 Volts
400	600 K.C.	6A8G	.1 MF	.5 Meg	1.73 Volts
15	600 K.C.	6K7G(R.F.)	.1 MF	.5 Meg	1.73 Volts
1	600 K.C.	Ant. Lead	.00015 MF	None	1.73 Volts

★ *For 1 Watt output.*
★★ *Output meter connected across voice coil.*
1.73 Volts equals 1 Watt output.
V.C. resistance—3 ohms.

©John F. Rider, Publisher

ALIGNMENT PROCEDURE

PRELIMINARY STEPS

To properly align this receiver the chassis must be taken out of the housing and placed on the service bench.

A metal plate is advised for a good ground to chassis, the plate to be at least a foot square, with one terminal of the storage battery connected to it through a heavy lead, preferably a starter cable. The "A" battery lead should likewise be brought up from the battery through as heavy a lead as possible (starter cable) to a terminal on the bench.

Plug in the Acoustinator, if the set undergoing alignment is thus equipped. Set Acoustinator at "Country" and "Voice" positions.

Connect the speaker to the chassis and plug the "A" lead into its receptacle. Turn the volume control to maximum and leave it in that position throughout the alignment, reducing the signal generator output if necessary.

IMPORTANT NOTE:

The trimmer labeled 600 K.C. in the R.F. coil can must not be adjusted in the field. It is the key point in the entire R.F. alignment and was carefully set in the factory by means of an accurate capacity bridge to its correct capacity (780 MMF in Models 8-30 and 8-40—840 MMF in Models 8-50, 8-60, 8-70, and 8-80). Before shipment, this trimmer was covered by a strip of black Scotch Tape, which should be left in position to eliminate any possibility of shifting its capacity through error. (In Model 8-30 only, this trimmer is located in the Osc. coil can.)

I.F. ALIGNMENT

1. Connect signal generator to control grid of the Osc.-Mod. tube (6A7 or 6A8G) through a .1 MF condenser, having first removed the grid cap from the top of the tube. (See Fig. 3.) Connect a 500,000 ohm resistor from the grid of the tube to the grid cap on the lead just removed from this tube. Turn condenser gang completely out of mesh. Connect output meter across speaker voice coil.
2. Set signal generator at 262 K.C. and carefully adjust the trimmers in the diode coil can to the point showing highest reading on the output meter.
3. Adjust the trimmers in the I.F. coil can to the point showing highest reading on the output meter.
4. Go over I.F. and diode adjustment several times to secure maximum accuracy.

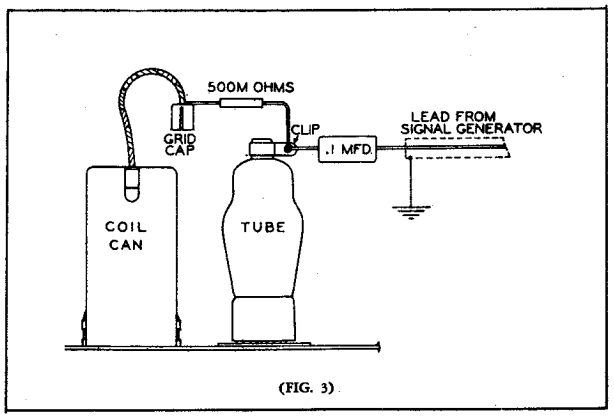

(FIG. 3)

ALIGNMENT PROCEEDURE
(CONTINUED)

SETTING THE RANGE

1. Connect signal generator to the control grid of the R.F. tube (78 or 6K7G) through a .1 MF Condenser having first removed the grip cap from the top of the tube. Connect a 500,000 ohm resistor from the grid of the tube to the grid cap on the lead just removed from this tube. (See Fig. 3.)
2. Set signal generator at 1560 K.C. and, with condenser gang completely out of mesh, adjust for maximum deflection on the output meter, the trimmer in the oscillator coil can labeled 1400 K.C. (In Model 8-30 this trimmer is on the middle section of the condenser gang.)
3. Set signal generator at 535 K.C. Turn condenser plates completely in mesh and adjust for maximum deflection on output meter, the trimmer in the oscillator coil can marked 600 K.C.

NOTE: The adjustments above set the range so the receiver will track with the calibrations in the control head.

R.F. AND ANTENNA ALIGNMENT

1. Connect the signal generator to the antenna lead through a .00015 MF condenser and to chassis ground. Set signal generator at 600 K.C. and turn condenser gang until signal is heard. Adjust trimmer on the antenna coil can labeled 600 K.C. for maximum deflection of output meter.
2. Set signal generator at 1400 K.C. Turn condenser gang until signal is heard. Adjust for maximum deflection of output meter, the trimmer in the antenna coil can marked 1400 K.C. (In Model 8-30 this trimmer is on the back section of the condenser gang.)
3. Adjust for maximum deflection of output meter, the trimmer in the R.F. coil can marked 1400 K.C. (In Model 8-30, this trimmer is on the front section of the condenser gang.)
4. Recheck steps 1, 2, and 3, for accuracy.

USE OF OSCILLOSCOPE IN ALIGNING I. F.'S

In service stations which possess the proper equipment, the visual method of adjusting the I.F. stage can be used to good advantage.

EQUIPMENT REQUIRED: Cathode Ray Oscilloscope and a frequency modulated signal generator. (NOTE: If your signal generator is unmodulated, a frequency modulator will be required to adapt it for use with the oscilloscope.)

PROCEDURE:

1. Align I.F. and diode trimmers in the regular manner as outlined in preceding paragraphs.
2. Connect "Wobbulator" to control grid of Osc.-Mod. tube (6A7 or 6A8G) through a .1 MF condenser, having first removed the grid cap from the top of the tube. Connect a 500,000 ohm resistor from the grid of the tube to the grid cap on the lead just removed from this tube. (Fig. 3).
3. Connect oscilloscope to the top or high side of the diode load resistor, which, in this case, is the volume control.
4. Adjust the "Wobbulator" frequency to 262 K.C. and observe the picture of the I.F. resonance curve as shown on the oscilloscope "screen". Correct alignment will result in a flat top curve, as shown in Fig. A.
5. Should the curve appear sharp at the "nose" with a shelf on either side of the peak, as shown in Fig. B, adjust the PLATE trimmer of the I.F. transformer slightly, until the curve approaches the condition shown in Fig. A. If the regular I.F. alignment has been properly carried out, it will be necessary only in rare instances to adjust other than the I.F. PLATE TRIMMER.

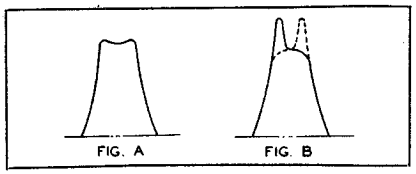

FIG. A FIG. B

GALVIN MFG. CO.

MODELS 8-30, 8-40, 8-50
8-60, 8-70, 8-80
Tuner Adjustments

PUSH-BUTTON TUNER ADJUSTMENT

The most important thing to remember when setting up the automatic Models 8-60 and 8-80 (Golden Voice) is that the magnets must be set accurately at the exact peak of the station carrier.

PRECAUTIONS: The adjustment can in most cases be made after the installation in the car, but if certain precautions are taken it is recommended that it be done on the service bench before the installation, since the mechanism is more accessible and it is therefore easier to do a careful job. The necessary precautions are as follows:

1. *Before proceeding with the adjustment, turn the set "on" and let it warm up long enough to reach a constant operating temperature.*
2. *Connect the receiver to an antenna of approximately the same capacity as the car antenna, and adjust the antenna trimmer for maximum sensitivity at 600 K.C.*
3. *After the receiver has been installed in the car, adjust the antenna trimmer at 600 K.C. for maximum noise level. If the noise level is too low, use a weak station. DO NOT TRIM ON A STRONG SIGNAL.*

MAGNET ADJUSTMENT: To set the stations, proceed as follows:

1. Turn the set on and let it play for NOT LESS THAN 10 MINUTES, to assure all electrical circuits reaching a constant operating temperature.
2. Select the 6 stations to be "set" and arrange the 6 magnets to the approximate station frequencies as indicated on the scale, locking them in position. DO NOT "SET" WEAK STATIONS. (Fig. 1.)
3. Press the first button. The motor will bring the mechanism to the first magnet. Loosen the locknut.
4. Tune manually to the exact peak of the station, using the tuning knob in the control head.
5. Press the first button half way in (far enough to energize the magnet, but not far enough to start the motor or mute the set.)
6. Slide the magnet in the direction of error until a "click" indicates that the latch bar has engaged in the stop.
7. Tighten the lock nut.
8. Proceed to "set" the other 5 stations.

NOTE: It may be necessary to rearrange the three spacing studs, located around the control ring, should they happen to be set at positions which interfere with the setting of favorite stations. This should be done in such a manner as to gain three point suspension for the center ring, permitting the magnets to slide freely while setting stations. (See Fig. 1.)

IMPORTANT NOTE: After "setting" each station, check your accuracy by retuning manually.

SPOT TUNER ADJUSTMENT

NOTE: Before setting any station, permit the radio to reach a constant operating temperature, as recommended for the push-button models.

1. Slip the spot tuner housing up the flexible control shaft far enough to expose the spot tuner mechanism, which consists of a small ball bearing, a brass raceway in which it moves, and a slotted retainer clip which acts as its guide.
2. Tune in the desired station as accurately as possible. A tuning meter is recommended, except for Model 8-40, which has no Acoustinator receptacle.
3. With a pair of slip jaw pliers, one jaw of which rests firmly on the small ball bearing, the other jaw of which rests on the bottom of the unit, apply enough pressure on the ball to force an indentation in the brass raceway in which it moves. (Fig. 2.)
   Proceed to set other favorite stations in the same manner.

BEFORE APPLYING PRESSURE WITH THE PLIERS, BE SURE THE STATION IS TUNED ACCURATELY. The raceway has a double track. Therefore, should you desire to reset the SPOT TUNER to a new series of stations, it can be done by moving the ball bearing over to the second track. To do this, turn the condenser gang to full mesh (ball bearing at extreme end of raceway) and with a pointed instrument, force the ball bearing into the adjoining groove.

A THIRD SETTING CAN BE MADE ONLY BY INSTALLING A NEW RACEWAY. Order part No. 1X4487 from your Motorola Distributor.

To install a new raceway, force the blue steel clip off the assembly, taking care not to lose the ball bearing. Then remove the retainer spring and washer from the end of the assembly and slide the raceway out.

When the unit is reassembled, run the ball bearing down toward the mounting bracket, almost to the end of the raceway. Then turn the condenser gang in the receiver to full mesh and install the spot tuner on the receiver housing. This procedure aligns the units so the ball will travel the full length of the raceway, while the condenser gang also completes its full 180° movement.

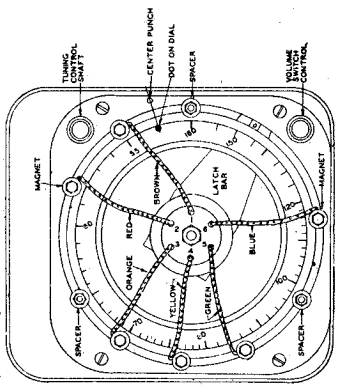

(FIG. 1)

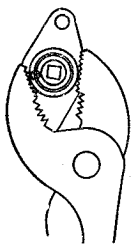

(FIG. 2)

the Acoustinator receptacle. It is sensitive and has additional utility in that it can be used to accurately read automatic and spot tuning models, we urgently recommend that a tuning meter be used. We have devised a simple meter that is easy to use since it merely plugs into resistance values between 0 and 100 ohms. Order No. 66x10415 Tuning and resistance meter, $4.95 net. ORDER FROM YOUR DISTRIBUTOR.

TUNING METER: To assure an accurate setting on both

©John F. Rider, Publisher

MODELS 35,45,65,70,
Golden Voice
Coil Data

GALVIN MFG. CO.

1937 Motorola UNIT COLOR CODE

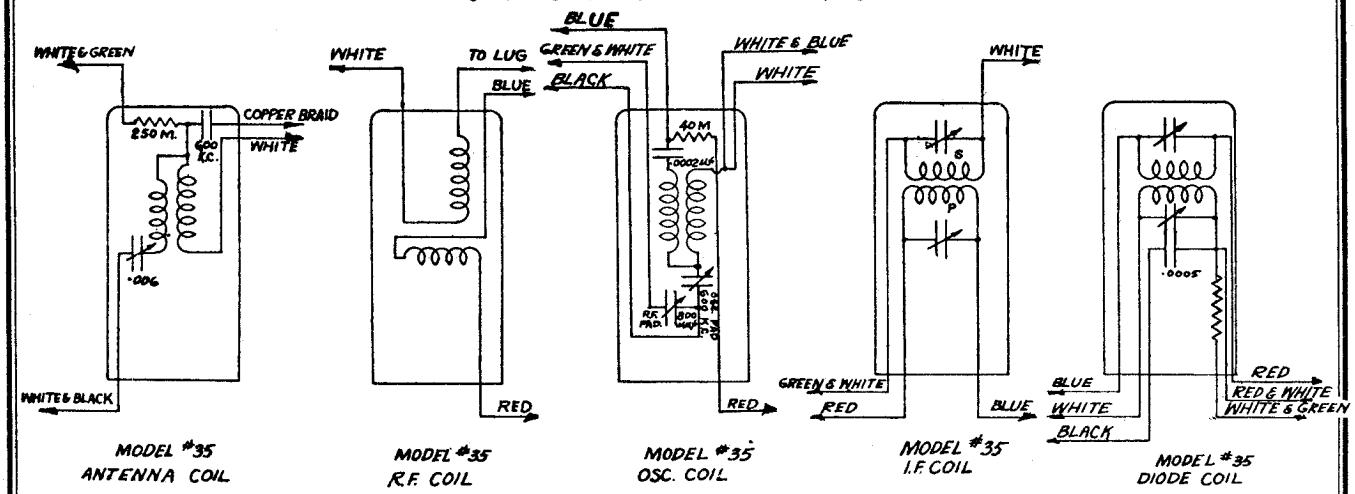

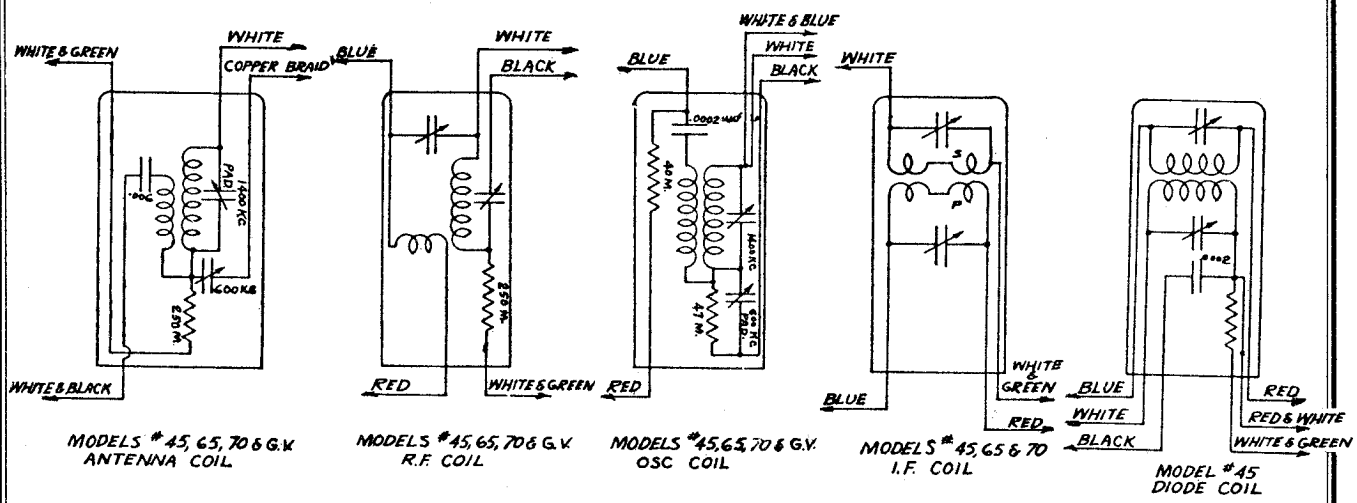

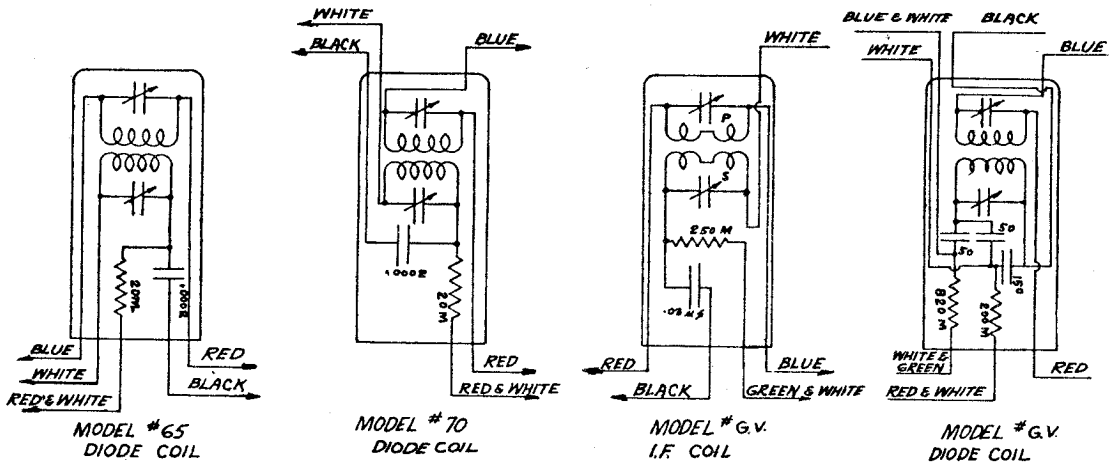

©John F. Rider, Publisher

GALVIN MFG. CO.

MODEL 10Y-1
Chassis 10-2
Schematic, Parts

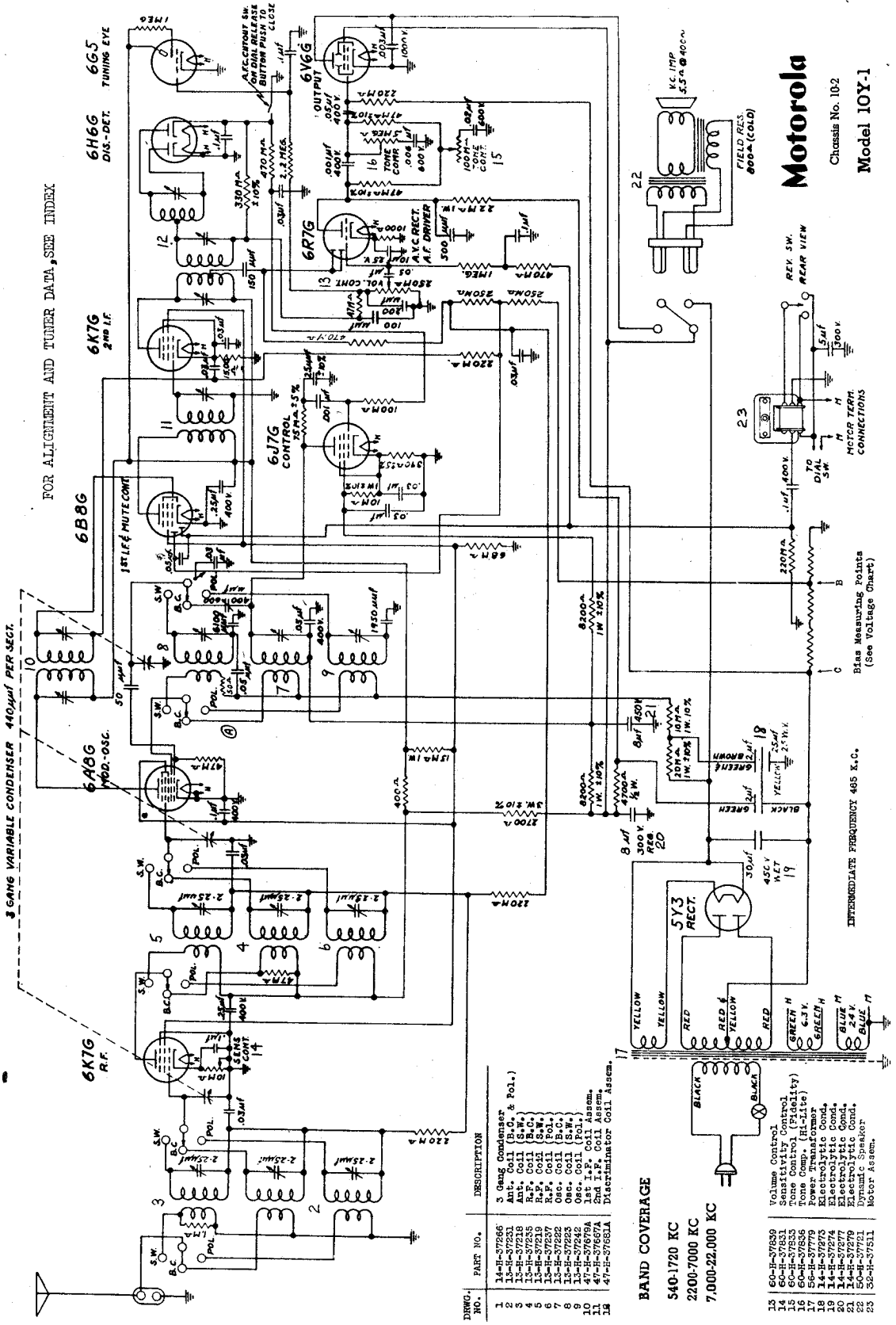

DRWG. NO.	PART NO.	DESCRIPTION
1	14-H-37266	3 Gang Condenser
2	15-H-37231	Ant. Coil (B.C. & Pol.)
3	15-H-37218	Ant. Coil (S.W.)
4	15-H-37235	R.F. Coil (B.C.)
5	15-H-37219	R.F. Coil (S.W.)
6	15-H-37237	R.F. Coil (Pol.)
7	15-H-37222	Osc. Coil (B.C.)
8	15-H-37223	Osc. Coil (S.W.)
9	15-H-37240	Osc. Coil (Pol.)
10	47-H-37679A	1st I.F. Coil Assem.
11	47-H-37667A	2nd I.F. Coil Assem.
12	47-H-37681A	Discriminator Coil Assem.
13	60-H-37839	Volume Control
14	60-H-37831	Sensitivity Control
15	60-H-37833	Tone Control (Fidelity)
16	60-H-37836	Tone Comp. (Hi-Lite)
17	56-H-37779	Power Transformer
18	14-H-37273	Electrolytic Cond.
19	14-H-37274	Electrolytic Cond.
20	14-H-37277	Electrolytic Cond.
21	14-H-37279	Electrolytic Cond.
22	50-H-37721	Dynamic Speaker
23	32-H-37511	Motor Assem.

©John F. Rider, Publisher

MODEL 10Y-1
Chassis 10-2
Socket, Trimmers
Voltage

GALVIN MFG. CO.

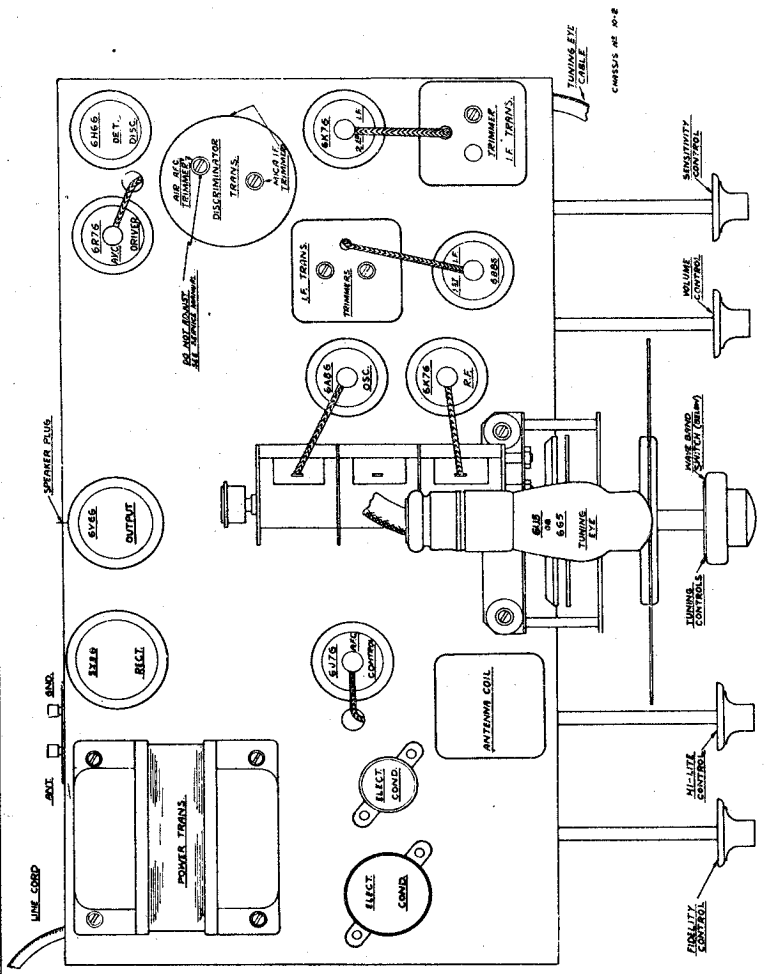

MODEL 10Y-1

TOP TERMINAL

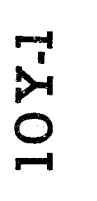

BOTTOM VIEW OF SOCKET

CHASSIS LAYOUT (10-2)

SOCKET VOLTAGES (CHASSIS 10-2)

TUBE	POSITION	1	2	3	4	5	6	7	8	9
6K7G	R. F.	0	6.3 AC	210	100	0	X	0	Note A	Note B
6A8G	1st Det. Osc.	0	6.3 AC	200	100	−13	195	0	0	Note B
6B8G	1st I. F.	0	6.3 AC	200	0	0	100	0	0	Note B
6K7G	2nd I. F.	0	0	195	100	0	X	6.3 AC	7	0
6H6G	2nd Det. AFC Disc.	0	6.3 AC	0	0	0	....	0	0	....
6J7G	AFC	0	6.3 AC	185	100	0	X	0	4.5	0
6R7G	AVC Driver	0	6.3 AC	150	0	0	X	0	4.5	0
6V6G	Output	0	6.3 AC	265	275	Note C	X	0	0	....
5Y3G	Rect.	0	5.0 AC	....	350 AC	....	350 AC	....	5.0 AC	....
6U5	Eye	0	Filament (Brown Wire) 6.3 AC Cathode (Black Wire) 0			Plate (Red Wire) 195 Grid (Green Wire) 0				

"X" indicates socket terminals used as dummy tie points.

Note A:—0 to 10.0 V. depending on position of sensitivity control.

Note B:—3.5 V. measured point B to ground on 10 V. scale (see circuit diagram).

Note C:—14.0 V. measured point C to ground on 50 V. scale (see circuit diagram).

All voltages, except rectifier filaments, measured from socket terminal indicated to chassis ground, using 1000 ohms per volt meter.

Line voltage 115, Current consumption 100, Maximum power output 7.5 watts.

©John F. Rider, Publisher

GALVIN MFG. CO.

MODELS 12Y,12Y-1
Chassis 12-1
Schematic,Parts

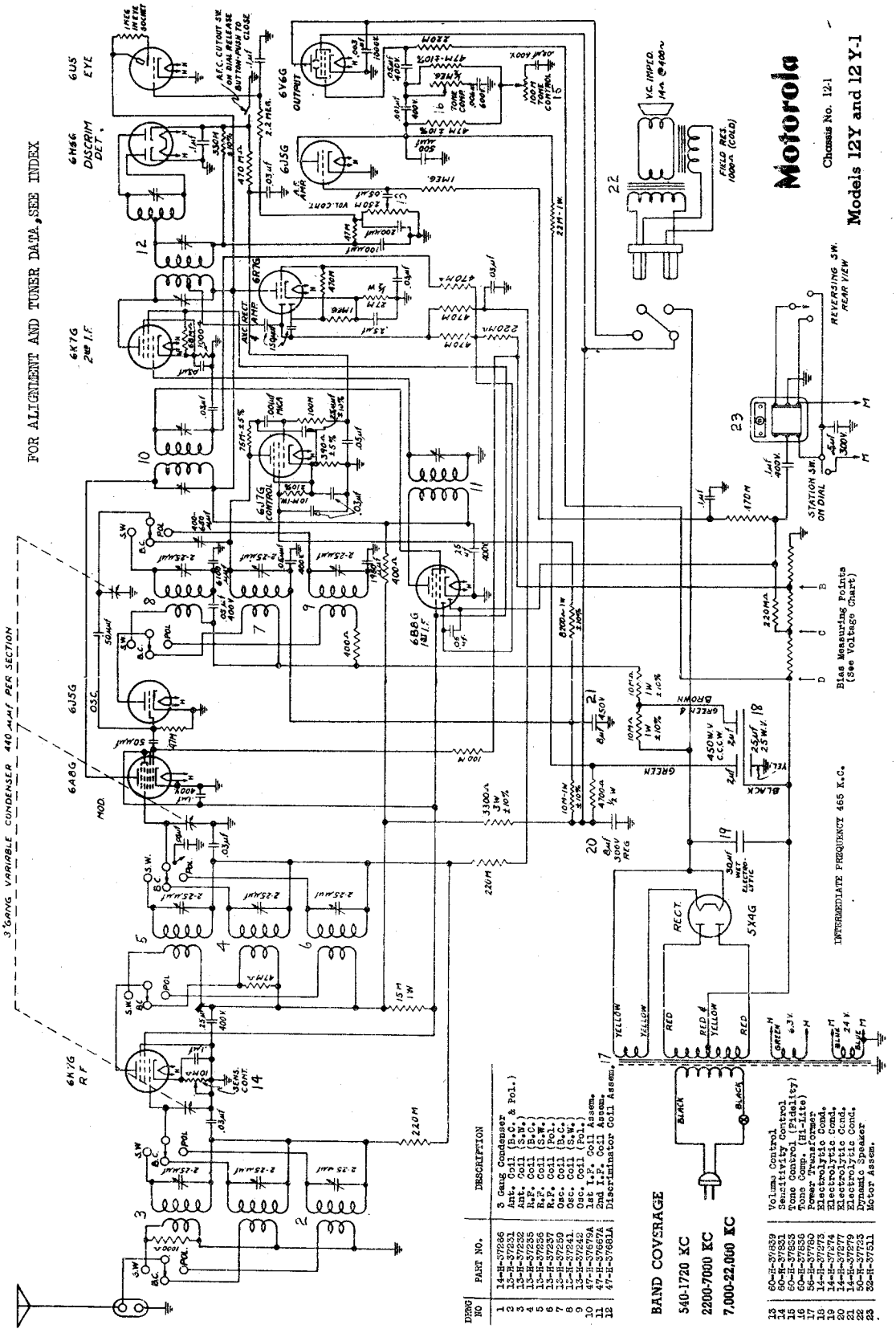

DIAG NO	PART NO.	DESCRIPTION
1	14-H-37286	3 Gang Condenser
2	15-H-37251	Ant. Coil (B.C. & Pol.)
3	15-H-37232	Ant. Coil (S.W.)
4	15-H-37235	R.F. Coil (S.W.)
5	15-H-37236	R.F. Coil (B.C.)
6	15-H-37237	R.F. Coil (Pol.)
7	15-H-37239	Osc. Coil (B.C.)
8	15-H-37241	Osc. Coil (S.W.)
9	15-H-37242	Osc. Coil (Pol.)
10	47-H-37679A	1st I.F. Coil Assem.
11	47-H-37680A	2nd I.F. Coil Assem.
12	47-H-37681A	Discriminator Coil Assem.
13	60-H-37839	Volume Control
14	60-H-37831	Sensitivity Control
15	60-H-37838	Tone Control (Fidelity)
16	60-H-37756	Tone Comp. (Hi-Life)
17	50-H-37760	Power Transformer
18	14-H-37275	Electrolytic Cond.
19	14-H-37274	Electrolytic Cond.
20	14-H-37277	Electrolytic Cond.
21	14-H-37279	Electrolytic Cond.
22	50-H-37723	Dynamic Speaker
23	32-H-37811	Motor Assem.

©John F. Rider, Publisher

MODELS 12Y,12Y-1
Chassis 12-1
Socket,Trimmers
Voltage

GALVIN MFG. CO.

MODELS
12Y
12Y-1

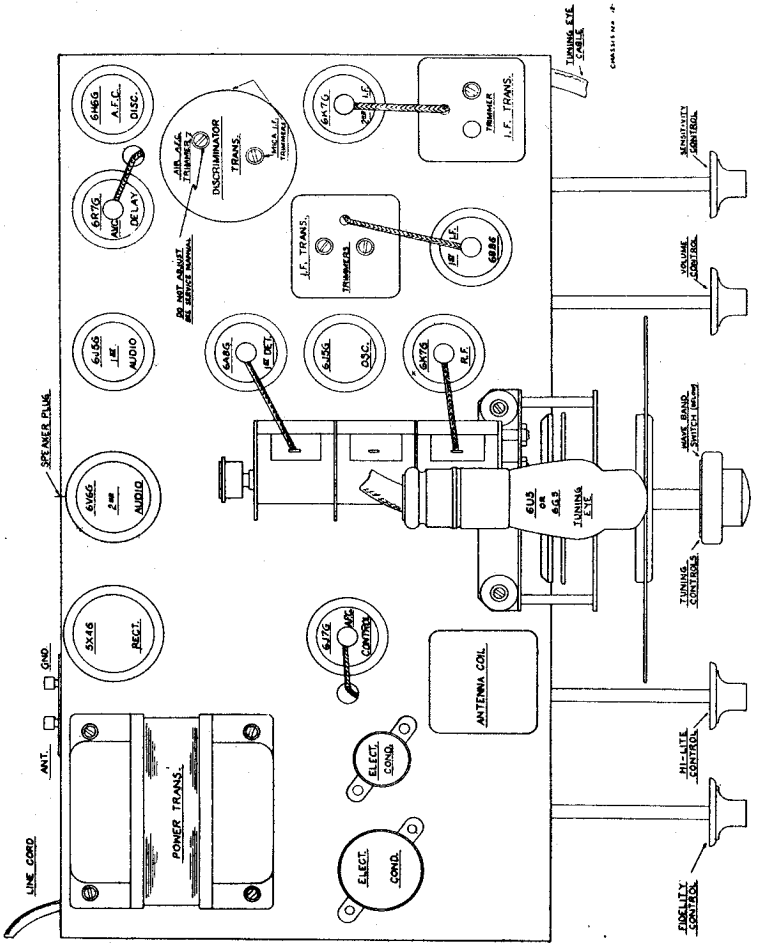

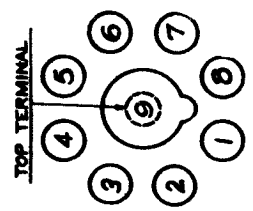

CHASSIS LAYOUT (12-1)

SOCKET VOLTAGES (CHASSIS 12-1)

TUBE	POSITION	1	2	3	4	5	6	7	8	9
6K7G	R. F.	0	6.3 AC	210	90	0	X	0	Note A	Note B
6J5G	Osc.	0	0	190	X	−28	....	6.3 AC	0	....
6A8G	1st Det.	0	0	205	95	−14	95	6.3 AC	0	Note B
6B8G	1st I. F.	0	6.3 AC	210	0	0	95	0	0	Note B
6K7G	2nd I. F.	0	0	210	95	6	X	6.3 AC	6	0
6H6G	2nd Det. AFC Disc.	0	6.3 AC	0	0	0	....	0	0	....
6J7G	AFC	0	6.3 AC	180	100	0	X	0	4.5	0
6R7G	AVC	0	6.3 AC	295	Note B	0	X	0	190	0
6J5G	AF	0	6.3 AC	150	0	Note C	X	0	0	....
6V6G	Output	0	6.3 AC	275	290	Note D	X	0	0	....
5X4G	Rect.	....	....	375 AC	....	375 AC	....	5.0 AC	5.0 AC	..
6U5	Eye	Filament (Brown Wire) 6.3 AC Cathode (Black Wire) 0			Plate (Red Wire) 200 Grid (Green Wire) 0					

"X" indicates socket terminals used as dummy tie points.

Note A:—0 to 8.5 V. depending on position of sensitivity control.

Note B:—3.5 V. measured point B to ground.

Note C:—6.0 V. measured point C to ground.

Note D:—15.0 V. measured point D to ground.

All voltages, except rectifier filaments, measured from socket terminal indicated to chassis ground, using 1000 ohms per volt meter.

Line voltage 115, Current consumption 130, Maximum power output 7.5 watts.

©John F. Rider, Publisher

©John F. Rider, Publisher

GALVIN MFG. CO.

MODEL 10Y-1
MODELS 12Y, 12Y-1
Dial Data, Trimmers
Alignment

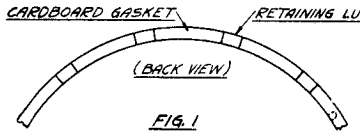

FIG. 1

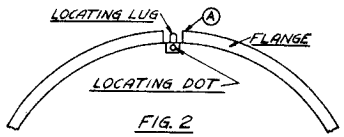

FIG. 2

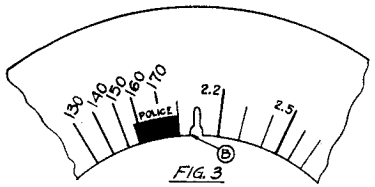

FIG. 3

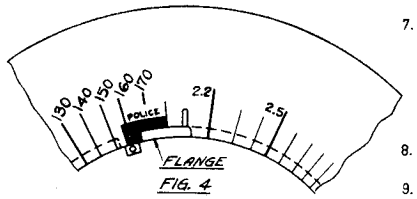

FIG. 4

REPLACING BROKEN DIAL SCALE

1. Tear out the remaining portion of the broken dial scale.
2. With long nosed pliers bend back the metal lugs that hold the dial scale in position (See Fig. 1). Also bend back the smaller locating lug. (Fig. 2.)
3. Tear out one of the cardboard dial retaining gaskets. (Fig. 1.)
4. With a hacksaw, make two cuts in the dial retaining flange, approximately one-eighth inch to either side of the locating dot (See Fig. 2). Bend outward and downward the one-quarter inch section between the two incisions. These cuts must go all the way to the bottom of the flange. (Sets of late manufacture have this cut out.)
5. Take a new dial scale that has a slot extending upwards from the inside edge, the slot being three-eighths of an inch long (See Fig. 3). If you have a dial scale without this slot, you can slot it with a fine hacksaw blade.
6. With a pair of pliers bend point "A" on the flange (Fig. 2) outward a trifle.
7. Thread the new dial scale into the flange by inserting point "B" on the dial scale (Fig. 3) behind point "A" on the flange (Fig. 2). Continue to thread the dial scale through this opening that has been made in the flange until you have made one complete revolution, at which time the dial scale will be in position. (Fig. 4) shows the start of this operation.
8. Adjust the dial scale until the slot is opposite the locating dot on the flange and with long nosed pliers bend the locating lug forward until it locks the dial scale in position.
9. Also with long nosed pliers, bend all of the dial retaining lugs forward firmly against the remaining cardboard retaining gasket. Also bend up the cut out section with dot.

ALIGNMENT PROCEDURE

Chassis 10-2 and 12-1

NOTE: Because of AFC, alignment of these sets presents a slightly different problem than usual. The alignment is not difficult, but we suggest that these instructions be followed explicitly.

1. Place chassis on service bench. Remove band spread pointer and dial. Insert a small piece of paper between the front contacts of the switch that is located on the front of the automatic control drum. These contacts break the motor circuit. This is necessary to prevent the motor from running during the alignment.
2. Connect signal generator to control grid of first detector tube (6A8G) through a .05 M.F. Condenser, and to chassis. Do not remove grid cap. Also connect output meter across speaker voice coil. Turn band switch to "American Programs" position. Turn condenser gang completely out of mesh. Press the release button to short out AFC.
3. Set signal generator at 465 K.C. and carefully adjust the three I.F. trimmers in the tops of the two small I.F. cans (one I.F. can has one trimmer only) to point showing highest reading on output meter.
4. Adjust the two mica trimmers in the large I.F. can to point showing highest reading on output meter. (IMPORTANT NOTE:—One of these trimmers is located near the bottom of the right hand side of the can, inside the covered hole; the other trimmer is the front trimmer on top of the can. The back trimmer on top of the can is an air trimmer and *must not* be adjusted at this time.)
5. Attach a 0-5 high resistance volt-meter between the cathode (Terminal No. 8) of the 6J7G AFC control tube and ground. Turn signal generator up to full output (still set at 465 K.C.) backing down on receiver volume control, if necessary.
6. Note cathode voltage reading on volt-meter with AFC shorted out (release button pressed in), then note cathode voltage reading with AFC operating (press any tuning button, permitting release button to fly out). When AFC discriminator is properly balanced, there should be no difference in reading between the two positions. If a variation is noted, it indicates that the adjustment of the air trimmer on top of the I.F. can is not correct.
7. Using a non-metallic screw driver, turn the air trimmer just a trifle at a time, checking continually the cathode voltage reading on the volt-meter by pressing alternately on the release button and on one of the tuning buttons (connecting and disconnecting AFC). When a position is found where voltage remains the same in both positions, the adjustment is correct.

   NOTE:—While making this adjustment it will be necessary to remove the non-metallic screw driver from its position in order to check the reading accurately since body capacity has considerable effect at this point.
8. *Switch AFC off by pushing in the release button and leave it off through the remaining steps of the alignment.*
9. Leave band switch in "American Programs" position. Connect signal generator to antenna and ground terminals, using a .0002 MF condenser in antenna lead.
10. Set signal generator and receiver dial both at 1700 K.C. Adjust BC OSC. trimmer until 1700 K.C. signal is heard.
11. Set signal generator at 1400 K.C. and turn condenser gang to the signal at 1400 K.C. Adjust BC ANT. and BC RF trimmers to point showing highest reading on output meter.
12. Set signal generator at 600 K.C. and rock pointer at 600 K.C. position on dial scale, while adjusting BC padder, until combination is found which gives highest output reading.
    NOTE:—If there is noise level at 600 K.C., padder can be adjusted to maximum noise without rocking gang and without use of signal generator. (Use short wire for pick-up if necessary.)
13. Turn band switch to "Police and Aircraft" position. Replace .0002 M.F. condenser in signal generator lead with a 400 ohm carbon resistor.
14. Set signal generator and receiver dial both at 7.0 MC. Adjust POLICE OSC. trimmer until 7.0 MC signal is heard.
15. Set signal generator at 5.8 MC and turn condenser gang to signal at 5.8 MC. Adjust POLICE ANT. and POLICE RF. trimmers to point giving greatest output reading, while slightly rocking condenser gang.
16. Turn band switch to "Foreign Programs" position, still using 400 ohm carbon resistor in antenna lead to signal generator.
17. Set signal generator and receiver dial both at 22.0 MC. Adjust SW OSC. trimmer until 22.0 MC signal is heard.
18. Set signal generator at 18.7 MC and turn condenser gang to the signal at 18.7 MC. Adjust SW ANT. and SW RF. trimmers to point giving greatest output reading, while slightly rocking condenser gang.
19. Padders on "Police" and "Foreign" bands are fixed. (No adjustment necessary.)

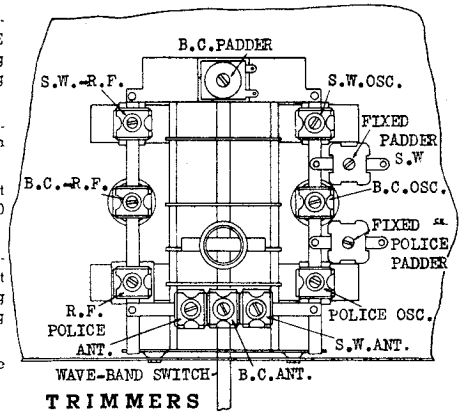

TRIMMERS

MODEL 10Y-1
MODELS 12Y,12Y-1
Tuner Assembly

GALVIN MFG. CO.

(Chassis 10-2)
(Chassis 12-1)

1. Motor assembly
2. Intermediate drive assembly
3. Adjustable mounting plate
4. Flywheel assembly
5. Travel-lite split gear assembly
6. Rotor gear
7. Drum holding nut
8. Drum assembly
9. Button plunger
10. Button lock nut
11. Planetary housing (main tuning shaft)
12. Planetary drive (vernier tuning shaft)
13. Rotor drive split gear
14. Planetary pinion gear
15. Condenser drive split gear
16. Reversing switch
17. Reversing pin
18. Flexible coupling

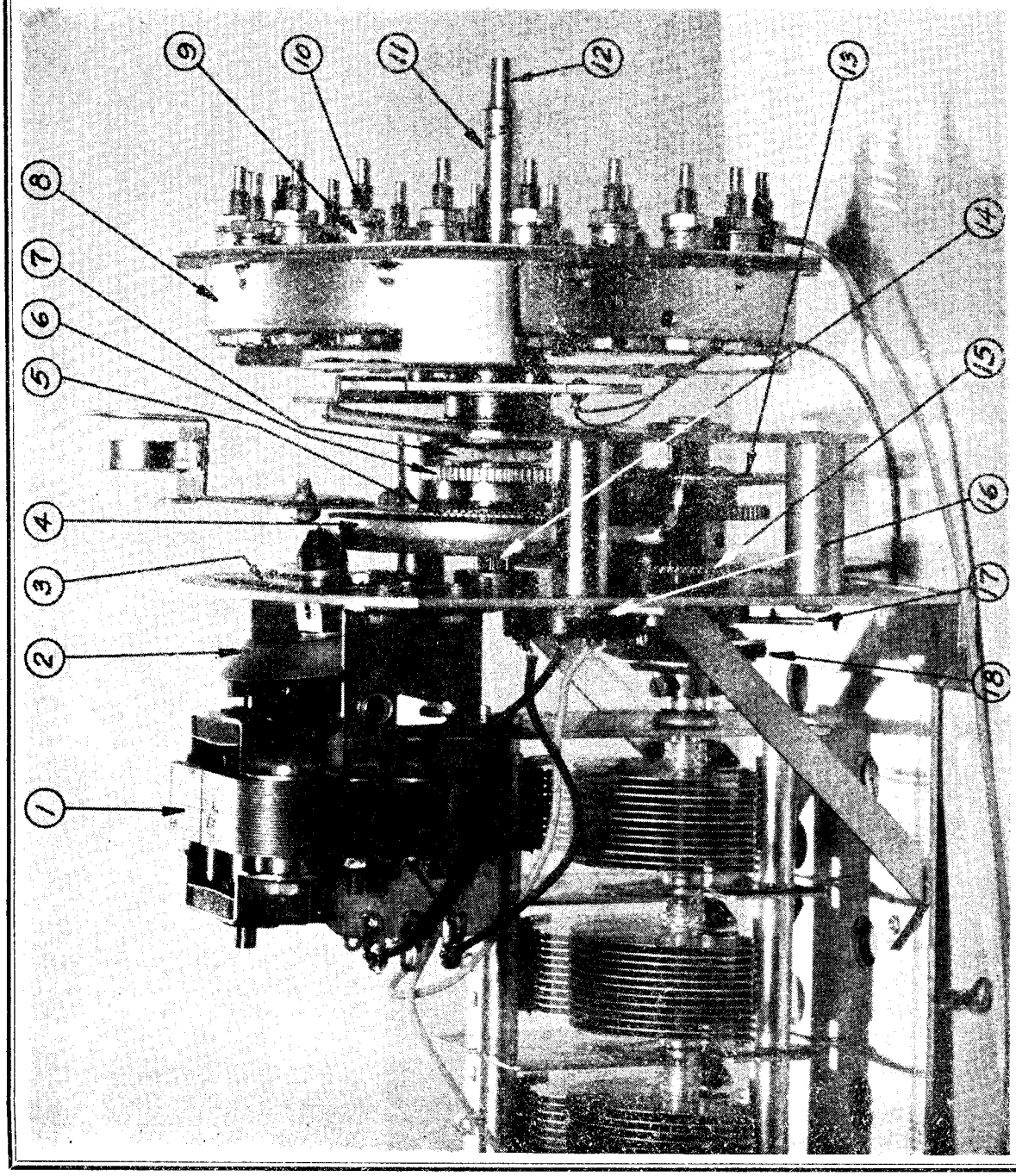

ELECTRIC AUTOMATIC TUNER

The Motorola electric automatic tuning system is simple in construction, having a minimum of moving parts. It is sturdy enough to stand severe usage. It is easy to service, since all parts liable to require attention are readily accessible. The mechanism is divided into three separate units; the automatic selector, the motor, and the driving mechanism.

©John F. Rider, Publisher

©John F. Rider, Publisher

THE DRUM

The automatic selector assembly is at the front of the unit—directly behind the escutcheon plate when the chassis is in the cabinet. Hereafter in this book it shall be referred to as the drum. Arranged in a circle round the edge of the drum are twenty plungers, to each of which a button is attached (after assembly in the cabinet). Nineteen of these buttons may be set up to tune automatically, nineteen different stations. The twentieth button, at the top, is a release button which should be pressed for manual tuning.

We do not recommend that the drum be opened for service, but a study of Fig. B, at the bottom of this page, will reveal how the mechanism works. This drawing shows the rotor and one button in its relative position. The drum housing is not shown. You will notice that the button plunger (No. 1) has a groove and shoulder running around its circumference. This serves to lock the button in when it is pressed, being held by a locking plate that hooks behind the shoulder.

The locking mechanism consists of three flat plates, the center of which is the locking plate. This locking plate is always under spring tension which tends to keep the holes out of line. (See Fig. C). However, when a button is pressed, the shoulder on the plunger forces the holes in alignment, releasing any button that may be held in at the time. A spring behind each button causes it to snap out when released. (No. 2 in Fig. B).

A button must be pressed one-sixteenth inch beyond its locking position in order to release any other button already locked in. Any number of buttons may be pressed at one time without damage to the mechanism. It will merely stop at the first button it reaches.

Behind the plunger for each station button is a stop arm (No. 3) which, when the lock nut in front of the plunger is loosened, can swing freely over a short arc. (Fig. A). In this manner, each button controls a small segment of the scale and may be set to any station that falls within its range. When the lock nut is tight, the arm is held rigidly in one position—that of the station to which it is set. A rounded extrusion on the end of the arm, engages in the slot on the rotor. The release button has no arm, its dual purpose being to release all station buttons and to operate the switch on the front of the drum, breaking the motor circuit and shorting out AFC.

The only other mechanism inside the drum is the rotor, also pictured on this page. The rotor is coupled through gears to the condenser assembly so that both turn simultaneously. At one point on the circumference of the rotor, an extrusion is made with a slot at the top. (No. 4, Figs. A and B.) When, in turning, the rotor reaches a button that has been pressed in, the stop arm on the button falls into this extruded slot, forming a mechanical stop, and at the same time opening the electrical circuit of the motor by operating the circuit breaker indicated by No. 5.

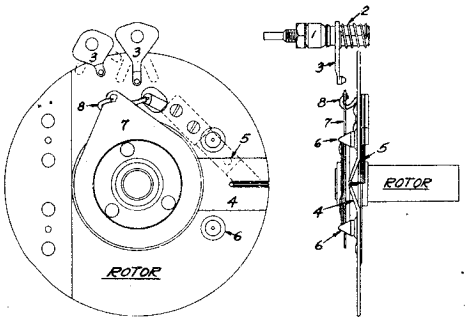

FIG. A

FIG. B

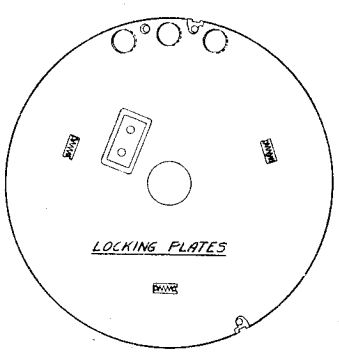

FIG. C

1. Button plunger
2. Button spring
3. Station stop arm
4. Rotor slotted stop
5. Circuit breaker
6. Rotor spacers
7. Rotor contact plate
8. Connecting wire

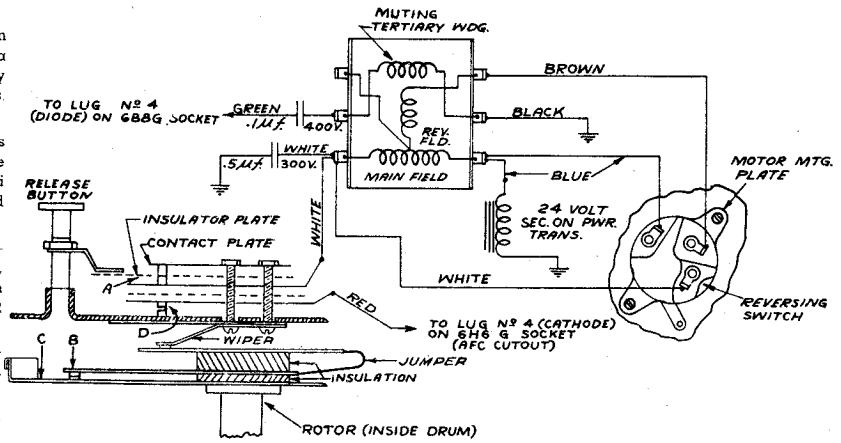

THE MOTOR CIRCUIT

A reversible synchronous motor is used, operated from a twenty-four volt winding in the power transformer. The armature itself acts as a clutch. When at rest, it is held back by a light coil spring. When the circuit is closed the armature automatically seeks its electrical center, thereby moving forward and forcing the rubber friction drive against the intermediate drive wheel.

The drawing shows the electrical circuits of the motor, the reversing switch, and includes an exploded view of the motor cut-off and AFC control switch, operated by the release button.

To trace the motor circuit, start with the twenty-four volt winding of the power transformer, one end of which is grounded. The circuit leads from the other end of this winding, up to the lower right hand terminal (looking at the motor from the rear), through the main field winding and through the white wire to the inside plate of the motor cut-off switch. From the inside plate the circuit leads to the outside plate when contacts "A" are closed, and through the two brass machine screws to the wiper arm inside of the drum. This wiper arm makes a wiping contact on the rotor contact plate. (No. 7, Fig. A.) This copper plate is wired to the rotor switch (circuit breaker) (Contacts B) one plate of which is grounded. This completes the circuit, since one end of the twenty-four volt transformer winding is also grounded. The reversing switch alternately connects the reversing field to either end of the main field.

In operation, contacts "A" and "B" must be closed, in order for the motor to run. When the release button is pressed for hand tuning, the motor circuit is broken at point "A". When any other button is pressed for automatic tuning, the release button jumps out, closing the circuit at point "A", the motor starts, turning the mechanism until the slot on the rotor reaches the button that has been pressed, at which time the circuit is broken at point "B", stopping the motor.

The lower contacts on the switch serve to short out AFC while tuning by hand, and automatically connect AFC for push-button tuning. AFC is shorted out by merely grounding the switch blade.

MUTING

To eliminate between-station noise, it is desirable that some muting system be used. In the Motorola models this is accomplished by adding an additional winding to the motor.

When the motor is running, a voltage is induced in this winding, which after being rectified in the 6B8G, is used to bias the first audio stage to cut-off, thereby muting the set until the station has been tuned in.

This same voltage is applied to the AVC network, temporarily reducing sensitivity so the AFC action will not begin until after the station has been tuned in.

DRIVE MECHANISM

The automatic drive mechanism is likewise simple. A rubber friction cone on the end of the armature shaft bears against an intermediate drive wheel which, in turn, through another rubber friction cone drives the flywheel. This type of drive makes it possible to eliminate many gears, making the mechanism quiet in operation.

©John F. Rider, Publisher

SETTING THE BUTTONS

To set the buttons, proceed as follows:

1. Select one of the stations you want to tune automatically and determine from the chart which button you must use in order to get that station.
2. Press this button and wait for the electric motor to bring the dial pointer to a stop. This should be at a position close to the exact frequency of the desired station.
3. Remove the button by unscrewing it on its spindle, and take out the felt washer, exposing the lock nut directly underneath.
4. Loosen the lock nut, not to exceed one-half turn, using the key supplied with the receiver, or a suitable socket wrench.
5. Press the Station Button and the Release (TUNE) Button down at the same time. While holding both buttons down, tune in the station accurately by hand, watching the eye for smallest shadow. (Holding the TUNE Button down permits accurate setting by shorting out A.F.C.)

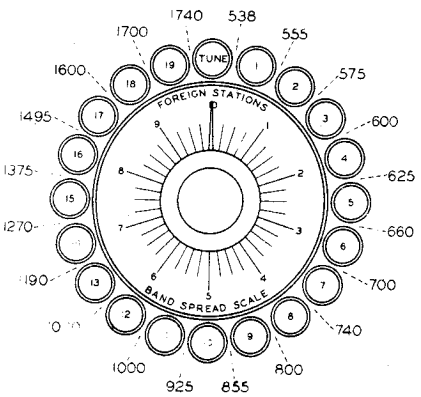

6. Release the TUNE Button first, then the Station Button, and with the key tighten the lock nut securely.
7. Push the celluloid disc out of the button from the back, using a match or toothpick, replace the felt washer, and screw the button back into its original position.
8. Select the proper tab from those supplied, and insert it in the face of the button, taking care that the call letters are horizontal for the sake of appearance. If no tab has been provided for that station, print the call letters on one of the blank tabs.
9. Insert the celluloid disc over the station tab. If the station is one of your favorite "Network" stations, use one of the colored discs (Red for NBC "Red" Network, Blue for NBC "Blue" Network, Green for Columbia, and Yellow for Mutual). For other stations, use the Amber celluloid discs.
10. Repeat the above steps for the remaining buttons.

NOTE:—It is conceivable that the customer may want to tune automatically, two stations which normally fall on the same button. If there is a free button on either side of this button, one of these stations can be set to that adjoining button by shifting the rotor a few degrees. To do this proceed as follows:

1. Press the adjoining vacant button and wait until the motor stops.
2. Loosen the lock nut and turn the dial by hand toward the other button as far as it will move freely. This swings the station stop arm (No. 3, Fig. A, Page 4) toward the other button. Lock it in this position by tightening the lock nut.
3. Loosen the two Allen-head set screws in the brass rotor gear (No. 6 in photo on page 3). This permits the tuning condenser to be moved without moving the rotor inside the drum.
4. Manually tune in the first of the desired stations.
5. Re-set the Allen-head screws.
6. Proceed to re-set all of the buttons, since this shifting of the rotor will disturb their setting.

CAUTION:—Do not shift the rotor too much, since to do so may eliminate the possibility of setting buttons 1 or 19 to any station.

CHANGING AUTOMATIC CONTROL DRUMS

(To identify parts, refer to photo on Page 3)

REMOVING THE OLD DRUM

1st—Loosen the two Allen-head set screws in the large brass rotor gear (No. 6) located directly in front of the travel-lite split gear. (No. 5.)

2nd—With a thin 7/8" end wrench, loosen the large Hex nut (No. 7) that holds the drum in position. This nut is in front of the large brass gear. Press in on the small planetary drive shaft (No. 12) and pull the drum off from the front. Take care not to lose the ball bearings that are a part of the planetary system.

INSTALLING NEW DRUM

1st—Turn the tuning condenser until the dial light points to 540 K.C. (First black line beyond 550 K.C.)

2nd—Holding the new drum with the release button at the top, press the button to the right of the release button and turn the rotor by hand until the stop is engaged.

3rd—Loosen the lock nut on this button. The rotor will then turn freely over a small arc. Turn the rotor counter clockwise toward the release button as far as it will go and tighten the lock nut. (Steps 1, 2, and 3 are for the purpose of aligning the rotor and the variable condenser so each will complete its cycle simultaneously with the other.)

4th—Slip the drum in position over the planetary (Tuning Shaft), taking care that the planetary is assembled correctly. To do this properly, press in on the small planetary drive shaft (No. 12) at the same time that you slip the drum over the ball bearings.

NOTE:—There are five ball bearings in the planetary assembly, three of which are visible through holes in the housing. The other two are inside the housing with a small tension spring between them. Take care that you do not lose any of the ball bearings.

5th—Tighten the large Hex nut (No. 7) that holds the drum in place.

6th—Tighten the two Allen-head set screws in the large brass rotor gear (No. 6), but while doing this hold the brass gear back against the travel-lite split gear (No. 5), to reduce its wobble to a minimum. Do not hold it too tight, since this would cause binding.

TORQUE ADJUSTMENT

After the new drum is in position, check the driving mechanism to assure yourself that you are securing a maximum transfer of power from the motor to the gear train. If necessary, clean the rubber friction cones with carbon tetrachloride (Carbona), to remove any grease that might interfere with traction. The flywheel and intermediate drive wheel surfaces may be cleaned in the same manner.

You may be able to further improve torque by adjusting the intermediate drive wheel (No. 2). This is held in place by a mounting plate (No. 3) which has elongated mounting holes so it can be adjusted up or down.

To secure maximum traction, this mounting plate should be moved down until the rubber drive cone just barely misses touching the flywheel, (No. 4) so it will not interfere with manual tuning. The motor itself is also mounted on brackets that have elongated holes, and it may be necessary to change this adjustment as well.

AUTOMATIC SERVICE NOTES

In the following paragraphs, you will find possible failures that you may encounter in the automatic tuner, along with suggestions for their corrections.

BUTTONS FAIL TO RELEASE

1. *Burr on button plunger.* To check this, remove the plunger by taking off the lock nut and the washer. To do this it is necessary to press in on another button in order to release the one which you wish to remove. If available, replace the plunger with a new one, and lubricate with several drops of fine oil. If a new plunger is not available, polish the old one with some very fine sand paper or emery paper.
2. *Locking Plate Not Riding on Bearing.* This is usually caused by the drum housing being assembled too loosely to the front plate. To determine whether or not the bearing is properly seated, check to see if the locking plate has a circular motion when buttons are pressed. If not, this indicates the plate is off of its bearing. To correct this tap lightly on the front plate around the bushing on which the band spread scale is mounted. For best results, use some circular object that can fit completely around the bushing, such as a short section of 7/8" pipe.

BUTTONS FAIL TO LOCK IN

1. *Locking Plate Too Tight.* Check the locking plate to see that it moves freely when buttons are pressed, but not too freely. In this respect, a happy medium must be found. If too tight it indicates that the drum housing is assembled too tightly to the front plate. Some light oil might ease this a trifle.
2. *Locking Plate Springs Missing.* Check the front of the drum assembly to determine that all three coil springs are present in the locking plate assembly. If any springs are missing, replace them.
3. *Foreign Matter Between Plates.* There are three plates in the locking mechanism, the one in the center being the actual locking plate. Dirt or metallic burrs between these plates can prevent freedom of movement. You might try some oil. However, it may be necessary to take the drum apart, which is not ordinarily recommended. If available, change the drum.
4. *Button May Be Stuck In.* If the button fails to lock in when pressed, it may be because some other button is already locked in and fails to release. (See above notes for proper correction.)
5. *Worn Plunger.* Remove the plunger as outlined above, and check to see if locking groove and shoulder are intact. If worn, replace with new plunger. If new plunger is not available, turn plunger one-quarter turn from original position and reinstall.

MOTOR FAILS TO START

1. *Button Does Not Release.* If, when a button is pressed, the motor does not start, it may be that the previously depressed button has not released, thereby closing the motor switch on the rotor inside the drum. (See previous section on that subject.)
2. *Motor Circuit Open.* Check for open motor winding or for open transformer secondary (24 V. winding). Check motor switch contacts on front of drum and on the rotor inside of the drum.
3. *Shorted Motor Filter Condenser.* Check the .5 MF motor noise filter condenser located directly under the motor. If shorted, motor will not run.

MOTOR FAILS TO STOP

1. *Ground In Motor Circuit.* Check the white lead from the motor to the switch on the front of the drum. Also check the switch. If ground exists in this circuit, the motor will not stop.
2. *Check Buttons One and Nineteen.* If the stop arms on the buttons on either side of the release button are adjusted too close to the release position, the rotor may not reach them in its revolution before the reversing switch is tripped. This makes it impossible to break the motor circuit at the switch on the rotor. To correct this remove lock nut and plunger and with small pointed tool swing stop arm away from release position. Also check reversing switch to see if it reverses at the proper moment.
3. *Rotor Switch Fails To Open.* Check the switch on the rotor to see if the contact breaks properly when the button that has been pressed is reached. Setting of rotor switch contacts may be adjusted through inspection hole in back of drum housing. This should be done with exceptional care. The correction can sometimes be accomplished by inserting a thin shim washer under the button plunger. This spaces the station stop arm closer to the rotor.
4. *Drum Switch Fails To Open.* Check the switch on the front of the drum to see that it opens properly when the release button is pressed for manual tuning. If switch fails to break contact properly, motor will continue to run.

FAILS TO STOP AT BUTTON

This condition is a little different from the condition mentioned in the previous discussion. In this type of failure the motor will stop at most of the buttons, but may fail to stop properly on one or two buttons.

1. *Short Plunger.* If the plunger is too short the stop arm will be spaced too far back from the rotor. Try a new plunger. If this does not correct the failure, insert one or more thin shim washers under the plunger. This will space the stop arm closer to the rotor.
2. *Skips Several Buttons.* If the motor skips several buttons located at different sections of the drum, treat each button as in Step No. 1 above. If, however, several adjacent buttons fail, then check the assembly of the drum housing to the front plate. It may be too loose along that particular edge of the drum. To correct this, peen the housing more firmly to the front plate.
3. *Too Much Torque.* Check the adjustment of the intermediate drive wheel, which can be moved up or down, to see that it releases promptly and freely when the circuit is broken. If it fails to release promptly, it would tend to carry the mechanism beyond the button. Adjust intermediate drive mounting plate if necessary.
4. *Lock Nut Loose.* Check all lock nuts to see that they are drawn up firmly. A loose lock nut outside the drum will mean a loose stop arm inside the drum.

MOTOR FAILS TO REVERSE

1. *Defective Reversing Switch.* If defective switch is found, replace it.
2. *Reversing Pin Collar Not Properly Set.* Check the adjustment of the reversing pin collar which is located directly in front of the flexible coupler, to see that the reversing switch trips exactly at the end of travel of the mechanism. The collar is adjustable, being held by two set screws.
3. *Open Reverse Winding In Motor.* Check the reversing field in the motor. If open, the motor will travel in one direction only.
4. *Travel-Lite Stops Not Properly Set.* Check the stops on the gear train studs that the travel-lite hits as it reaches either end of the dial. If the travel-lite bracket hits the stop before the reversing switch trips, the motor will not reverse. Stops may be either of two types: brass clamp or screw and lock nut.

BUTTONS FAIL TO RETAIN ORIGINAL SETTING

1. *Loose Lock Nut.* A loose lock nut will permit the stop arm to move from its original setting.
2. *Loose Gear Bushing.* Check the gears in the gear train, particularly the split gears, to make sure there is no lost motion between the gear and the bushing.
3. *Loose Coupling.* Check the flexible rubber coupling between the mechanism and the tuning condenser for loose set screws, loose bushing, or loose rivets.
4. *Loose Drum-Holding Nut.* Check the large Hex drum-holding nut, to be sure the drum is held firmly in place.
5. *Loose Drum Front Plate.* Make sure the front plate is peened firmly to the drum housing.
6. *Loose Set Screws.* Check all set screws in the gear train.
7. *Improper Button Setting.* Check all button settings, to make sure they are set to the center of the station carrier. This is extremely important. When setting buttons, the release button must be held in firmly to short out AFC, otherwise it is impossible to make the setting at the center of the carrier.
8. *AFC Switch Grounded.* Check the AFC Switch which is the inside blade of the switch on the front of the drum. If this is grounded while tuning automatically, AFC does not operate. No automatic tuning mechanism is accurate enough to operate without AFC.

SLIPPAGE

1. *Rubber Drive Cones Worn.* Replace if necessary.
2. *Loose Set Screws in Gear Train.* Tighten all set screws firmly.
3. *Improper Adjustment of Intermediate Drive.* Check intermediate drive wheel to see that it bears firmly on the flywheel while the motor is running. If necessary, adjust intermediate drive mounting plate.
4. *Binding In Gear Train.* Press release button and tune set manually. If binding is noted, attempt to relieve it as follows: Loosen machine screws that extend through the rear mounting plate into the spacing studs that hold the gear train. If tension is relieved, insert shim and retighten machine screw.
5. *Rotor Drags.* If the mechanism turns too stiffly, it may be that the rotor inside the drum is dragging. Lubricate rotor bearing and check to see if drum housing is peened too firmly to front plate.
6. *Oil On Driving Surfaces.* Make sure that the rubber friction cones, the intermediate drive wheel and the flywheel are free from oil. If necessary, clean with several drops of carbon tetrachloride (Carbona.)

MANUAL CONTROLS TOO STIFF

1. *Intermediate Drive Dragging.* Check intermediate drive to see that it falls back away from flywheel when motor is not running. If necessary, readjust intermediate drive mounting bracket.
2. *Motor Armature Fails To Fall Back.* The failure in Item 1, may be caused by this. Check the spring in front of the armature, also check lubrication of armature bearings. If motor armature seems to turn too stiffly, see that it is properly aligned and is not dragging at any point on its circumference. The motor bearings are of the self-aligning type and can often be brought into alignment by tapping the laminations of the motor lightly with some heavy tool.

PLANETARY DRIVE (VERNIER) DOES NOT OPERATE CORRECTLY

1. *Weak Planetary Spring.* To check this you must be able to visualize the correct assembly of the planetary. The planetary mechanism uses five loose ball bearings in all, three of which are visible through holes in the planetary housing (large tuning shaft) when the drum assembly is removed. The other two ball bearings are located inside the housing with a tension spring in between. A sixth ball bearing is spot-welded to the end of the planetary drive shaft (small tuning shaft). When assembled correctly, the ball on the end of the planetary drive shaft bears against a free ball bearing which in turn bears against the planetary spring and this spring in turn rests on another ball bearing. A weak planetary spring will cause slippage.
2. *Ball Bearing Missing.* If any of the ball bearings in the planetary assembly are lost, and this can easily happen when changing drums, the planetary will not drive satisfactorily.
3. *Race-Way Worn.* The drum bearing has a race-way on the inside, around which the three ball bearings revolve. If this is worn the only correction is a new drum.
4. *Improper Lubricant.* The planetary must be properly lubricated with a heavy lubricant, preferably vaseline.
5. *Planetary Shaft Bent.* This sometimes happens, especially when the instrument has been handled roughly in transportation. Obviously, the only correction is a new planetary assembly.

OFF CALIBRATION

1. *Travel-Lite Improperly Adjusted.* Check adjustment of the travel-lite bracket. It is adjustable and can be moved over a considerable range.
2. *Travel-Lite Split Gear.* If the calibration is off so far that the adjustment of the travel-lite bracket will not correct it, then the travel-lite split gear has probably slipped in its adjustment on the large brass gear that drives it. It will be necessary to move the split gear several notches in the required direction. In changing this adjustment, be sure you do not lose any of the split gear coil springs, and be sure the split gear is re-assembled with proper spring tension.

MANUAL TUNING BROAD

1. *Set out of Alignment.* Check alignment, following procedure outlined in this book.
2. *AFC Not Shorted Out.* Check the switch on the front of the drum to make sure that the bottom blade grounds against the front plate of the drum when the release button is pressed in for manual tuning. If this bottom blade fails to touch the drum, increase tension of small black steel spring on the release button. Replace this spring if necessary.

©John F. Rider, Publisher

MODEL 59F1
Schematic

GALVIN MFG. CO.

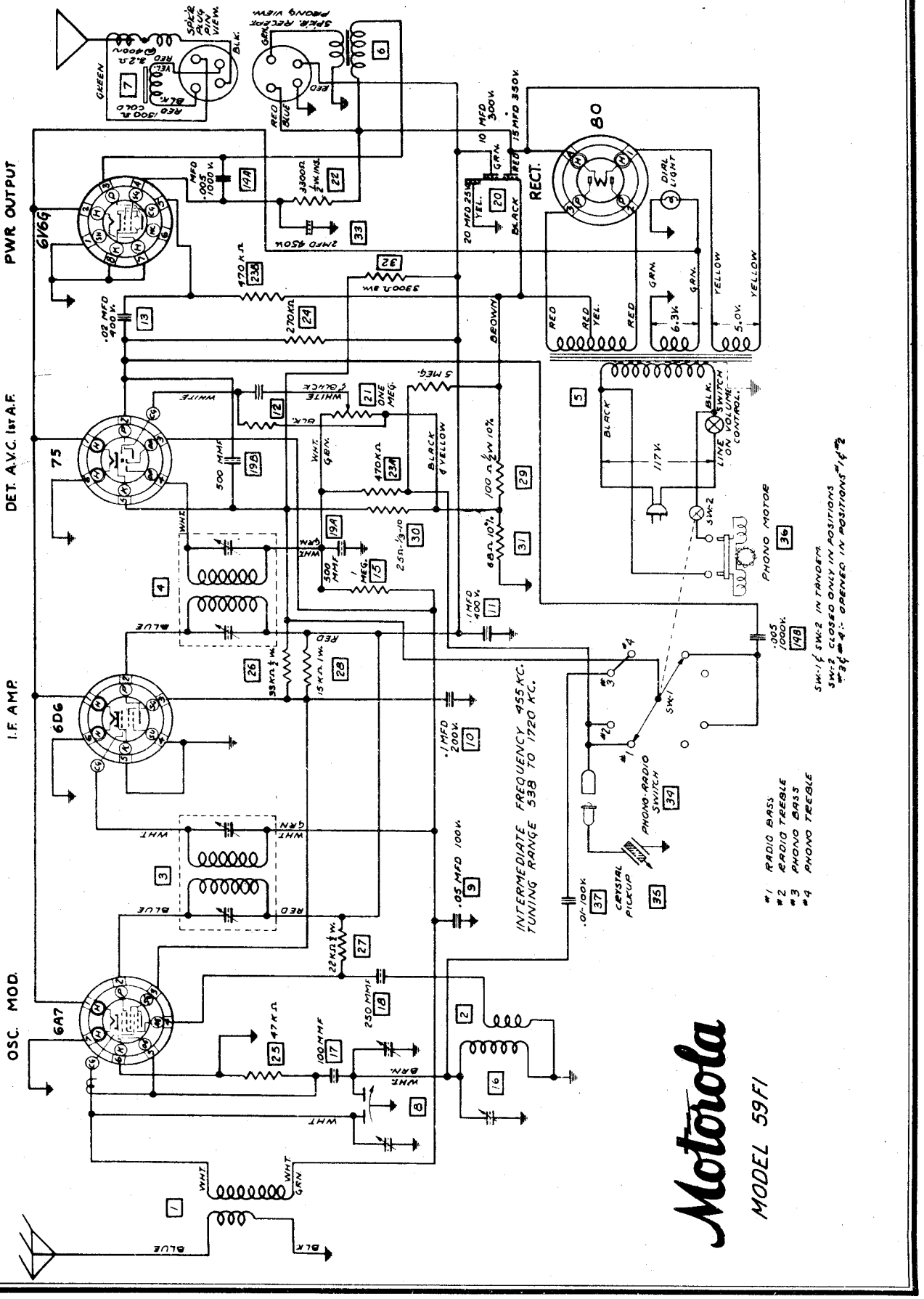

©John F. Rider, Publisher

GALVIN MFG. CO.

MODELS 59K1, 59T5 Early
59T5 Late
Chassis 59R5
Schematic, Parts

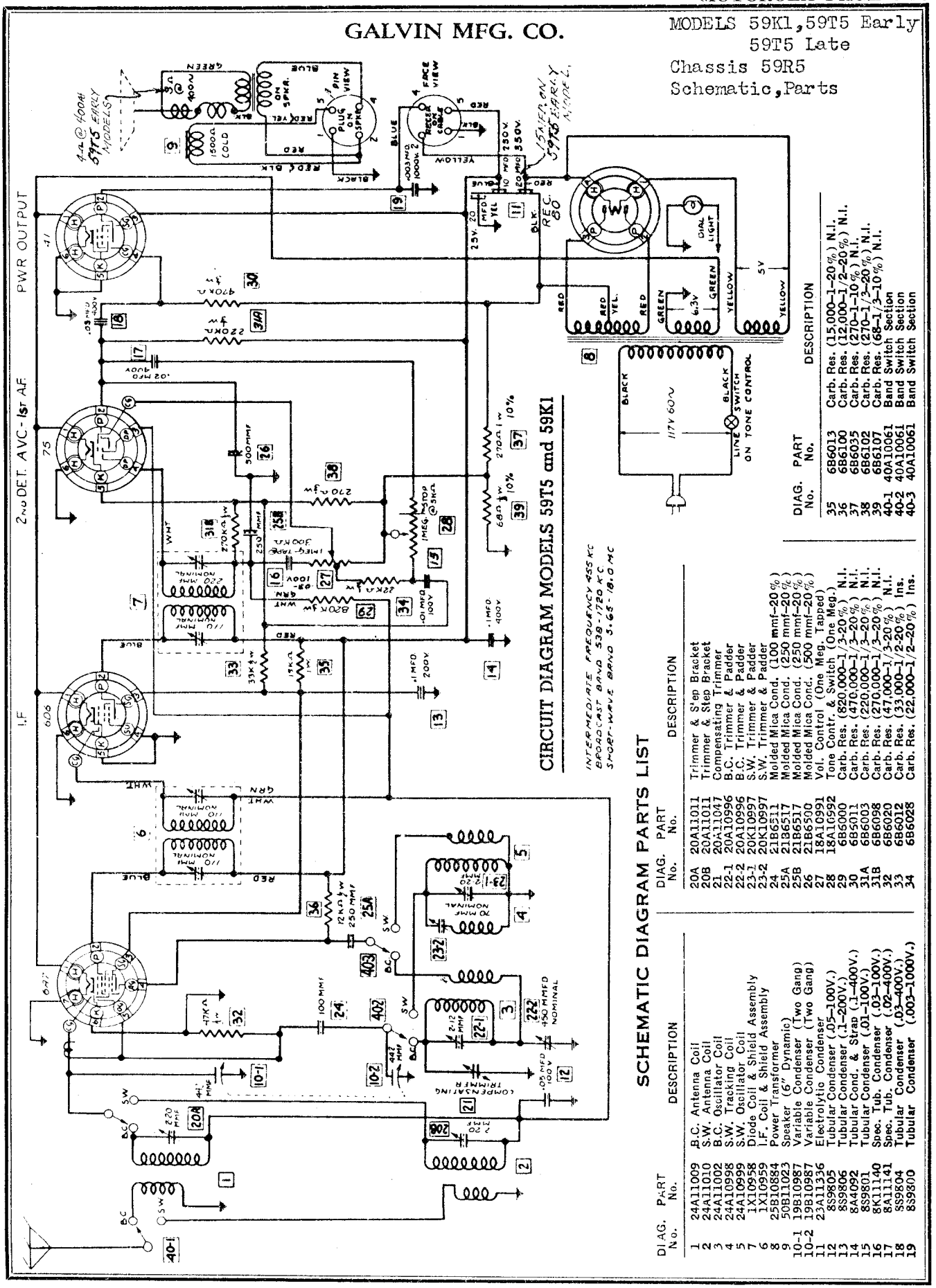

SCHEMATIC DIAGRAM PARTS LIST

DIAG. No.	PART No.	DESCRIPTION
1	24A11009	B.C. Antenna Coil
2	24A11010	S.W. Antenna Coil
3	24A11002	B.C. Oscillator Coil
4	24A10998	S.W. Tracking Coil
5	24A10999	S.W. Oscillator Coil
7	1X10958	Diode Coil & Shield Assembly
6	1X10959	I.F. Coil & Shield Assembly
8	25B10884	Power Transformer
9	50B11023	Speaker (6" Dynamic)
10-1	19B10987	Variable Condenser (Two Gang)
10-2	19B10987	Variable Condenser (Two Gang)
11	23A11336	Electrolytic Condenser
12	8S9805	Tubular Condenser (.05–100V.)
13	8S9806	Tubular Condenser (.1–200V.)
14	8A4092	Tubular Cond. & Strap (.1–400V.)
15	8S9801	Tubular Condenser (.01–100V.)
16	8K11140	Spec. Tub. Condenser (.03–100V.)
17	8A11141	Spec. Tub. Condenser (.02–400V.)
18	8S9804	Tubular Condenser (.03–400V.)
19	8S9800	Tubular Condenser (.003–1000V.)
20A	20A11011	Trimmer & Step Bracket
20B	20A11011	Trimmer & Step Bracket
21	20A11047	Compensating Trimmer
22-1	20A10996	B.C. Trimmer & Padder
22-2	20A10996	B.C. Trimmer & Padder
23-1	20K10997	S.W. Trimmer & Padder
23-2	20K10997	S.W. Trimmer & Padder
24	21B6511	Molded Mica Cond. (100 mmf–20%)
25A	21B6517	Molded Mica Cond. (250 mmf–20%)
25B	21B6517	Molded Mica Cond. (250 mmf–20%)
26	21B6500	Molded Mica Cond. (500 mmf–20%)
27	18A10991	Vol. Control (One Meg. Tapped)
28	18A10992	Tone Contr. & Switch (One Meg.)
29	6B6000	Carb. Res. (820,000–1/3–20%) N.I.
30	6B5011	Carb. Res. (470,000–1/3–20%) N.I.
31A	6B6003	Carb. Res. (220,000–1/3–20%) N.I.
31B	6B6098	Carb. Res. (270,000–1/3–20%) N.I.
32	6B6020	Carb. Res. (47,000–1/3–20%) N.I.
33	6B6012	Carb. Res. (33,000–1/2–20%) Ins.
34	6B6028	Carb. Res. (22,000–1/2–20%) Ins.
35	6B6013	Carb. Res. (15,000–1–20%) N.I.
36	6B6100	Carb. Res. (12,000–1/2–20%) N.I.
37	6B6035	Carb. Res. (270–1–10%) N.I.
38	6B6102	Carb. Res. (270–1/3–20%) N.I.
39	6B6107	Carb. Res. (68–1/3–10%) N.I.
40-1	40A10061	Band Switch Section
40-2	40A10061	Band Switch Section
40-3	40A10061	Band Switch Section

©John F. Rider, Publisher

MODELS 59K1,59T1,59T2
59T3,59T4,59T5,69K1
Trimmers,Alignment

GALVIN MFG. CO.

Sensitivity,Gain
Voltage

MODELS 59T1, 59T2, 59T3, 59T4, 59T5, 59K1, 69K1

GALVIN MANUFACTURING CORPORATION, 4545 W. Augusta Blvd., CHICAGO

ALIGNMENT PROCEDURE

MODELS 59T5, 59K1 and 69K1

1. Connect signal generator to control grid of Osc.-Mod. tube (6A7) through a .05 MF. condenser and to chassis. Do not remove grid cap. Also connect output meter across speaker voice coil. Turn band switch to "Broadcast" position. Turn condenser gang completely out of mesh.
2. Set signal generator at 455 K.C. and carefully adjust the four I.F. trimmers *(located in top of I.F. coil cans)* to point showing highest reading on output meter.
3. Leave band switch in "Broadcast" position. Connect signal generator to antenna and ground terminals, using a .0002 MF condenser in antenna lead.
4. Set signal generator and receiver dial both at 1700 K.C. Adjust BC OSC. trimmer until 1700 K.C. signal is heard.
5. Set signal generator at 1400 K.C. and turn condenser gang to the signal at 1400 K.C. Adjust BC ANT. trimmer to point showing highest reading on output meter.
6. Set signal generator at 600 K.C. and rock pointer at 600 K.C. position on dial scale, while adjusting BC padder, until combination is found which gives highest output reading. *(NOTE: If there is noise level at 600 K.C., padder can be adjusted to maximum noise without rocking gang and without use of signal generator. Use short wire for pick-up if necessary.)*
7. Turn band switch to "Short Wave" position. Replace .0002 MF condenser in signal generator lead with a 400 ohm carbon resistor.
8. Set signal generator and receiver dial both at 18.0 MC. Adjust S.W. OSC. trimmer until 18.0 MC signal is heard.
9. Set signal generator at 16.0 MC and turn condenser gang to signal at 16.0 MC. Adjust S.W. ANT. trimmer to point giving greatest output reading. *(Use non-metallic screw driver.)*
10. Set signal generator at 6.0 MC and rock pointer at 6.0 MC position on dial scale, while adjusting S.W. padder, until combination is found which gives highest output reading. *(NOTE: May also be adjustable to maximum noise.)*

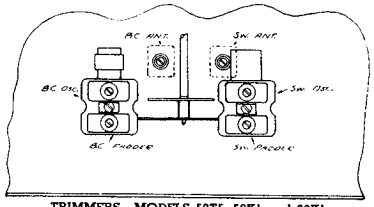

TRIMMERS—MODELS 59T5, 59K1 and 69K1

MODELS 59T1, 2, 3, and 4

NOTE: When aligning 59T1 and 59T3 AC-DC models, it is advisable to use a blocking condenser in series with the ground connection to the signal generator. If your signal generator is AC operated it may not be possible to connect to 6A7 grid for I.F. alignment of AC-DC models, on account of AC hum. If this is so, feed 455 KC signal into antenna lead, advancing signal generator attenuator accordingly.

1. Connect signal generator to control grid of Osc.-Mod. tube (6A7) through a .05 MF condenser, and to chassis. Do not remove grid cap. Also connect output meter across speaker voice coil. Turn condenser gang completely out of mesh.
2. Set signal generator to 455 KC and carefully adjust the I.F. trimmers to point showing highest reading on output meter.
3. Connect signal generator to antenna and ground leads using a .0002 MF condenser in antenna lead.
4. Set signal generator and receiver dial both at 1700 KC. Adjust Osc. trimmer (on small section of condenser gang) until 1700 KC signal is heard.
5. Set signal generator at 1400 KC and turn condenser gang to the signal at 1400 K.C. Adjust antenna trimmer (on large section of condenser gang) to point showing highest reading on output meter.

SENSITIVITY AND STAGE GAIN MEASUREMENTS

These stage gain measurements will, if properly used, enable you to localize trouble quickly. They are intended for use with a signal generator that is accurately calibrated in microvolts.

Starting with the intermediate frequency stage, working back stage by stage finally to the antenna terminal, the circuit in which the trouble exists will quickly be determined by evidence of low gain, when signal generator attenuation readings are compared to the normal values as shown in the tables.

All stage-gain measurements must be made with the volume control set for full volume. The shielded lead from the signal generator is connected to the top grid terminal of the tube through a .1 MF condenser, with a 500M Ohm resistor connected as a leak resistance between the grid of the tube and the grid cap which has been removed.

When measuring over-all sensitivity at the antenna terminal, use a .0002 MF condenser in place of the .1 MF.

It must be remembered that the figures in the table are average, and allowance must be made for variations between two sets of the same general type, due to difference of tube characteristics, etc.

Stage gains are not given for Models 59T1 and 59T3 because of the difficulty in making accurate measurements on AC-DC receivers with the average signal generator, due to AC hum.

MODELS 59T2 AND 59T4

Microvolt Input	Generator Set at	Generator Connected to	Dummy Antenna Capacity	Leak Resistance	Output Meter **
2800	455 K.C.	6D6 Grid	.1 MF	.5 Meg	.4 Volts
50	455 K.C.	6A7 Grid	.1 MF	.5 Meg	.4 Volts
55	600 K.C.	6A7 Grid	.1 MF	.5 Meg	.4 Volts
20	600 K.C.	Ant. Lead	.0002 MF	None	.4 Volts

MODELS 59T5, 59K1 AND 69K1

Microvolt Input *	Generator Set at	Generator Connected to	Dummy Antenna Capacity	Leak Resistance	Output Meter **
2500	455 K.C.	6D6 Grid	.1 MF	.5 Meg	.25 Volts
25	455 K.C.	6A7 Grid	.1 MF	.5 Meg	.25 Volts
35	600 K.C.	6A7 Grid	.1 MF	.5 Meg	.25 Volts
15	600 K.C.	Ant. Lead	.0002 MF	None	.25 Volts

* For .05 Watts output. ** Output meter connected across voice coil.

SOCKET VOLTAGES

Numerals refer to socket terminals as indicated on circuit diagram

MODELS 59T1 AND 59T3 — POWER CONSUMPTION 50 WATTS

TUBE	POSITION	1	2	3	4	5	6	7	8
6A7	Osc.-Mod.	AC	85	55	85	0	7.5	AC	—
6D6	I.F.	AC	85	85	7.5	7.5	AC	—	—
75	Det.-Avc	AC	50	0	0	6.0	AC	—	—
25A7G	Output	'100	AC	95	85	0	AC	AC	7.5
	Rect.								

MODELS 59T2 AND 59T4 — POWER CONSUMPTION 55 WATTS

6A7	Osc.-Mod.	6.0 AC	220	100	140	—10.0	0	0	
6D6	I.F.	6.0 AC	220	100	0	0	0	—	
75	Det.-Avc	6.0 AC	90	—7	—6	—1.7	0	—	
41	Output	6.0 AC	215	215	NOTE A	0	0	—	
80	Rect.	305	AC	AC	305	—	—	—	

NOTE A:—15 V. Measured at Bias Resistor.

MODELS 59T5 AND 59K1 — POWER CONSUMPTION 65 WATTS

6A7	Osc.-Mod.	6.0 AC	260	120	190	—28	0	0
6D6	I.F.	6.0 AC	260	120	0	0	0	—
75	Det.-Avc	6.0 AC	110	—9	—1.3	—2.3	0	—
41	Output	6.0 AC	320	260	NOTE A	0	0	—
80	Rect.	325	AC	AC	325	—	—	—

NOTE A:—20 V. Measured at Bias Resistor.

MODEL 69K1 — POWER CONSUMPTION 80 WATTS

6A7	Osc.-Mod.	6.0 AC	207	96	157	—10	0	0	—
6D6	I.F.	6.0 AC	207	96	0	0	0	—	—
6Q7G	Det.-Avc	0	0	105	—1.5	—1.5	—	6.0 AC	—2.0
42	Output	6.0 AC	230	207	0	10	0	—	—
42	Output	6.0 AC	230	207	0	10	0	—	—
80	Rect.	322	AC	AC	322	—	—	—	—

All measurements made with 1000 ohms per volt meter.
On AC-DC models measure voltages from B— to socket terminal indicated.
On AC models measure from chassis ground to socket terminal indicated.
Line voltage 117 Volts.

©John F. Rider, Publisher

©John F. Rider, Publisher

MODEL 59T1 Early
Chassis 59R1
MODEL 59T3
Chassis 59R3
Schematic, Parts

FOR SERVICING DATA
SEE INDEX

GALVIN MFG. CO.

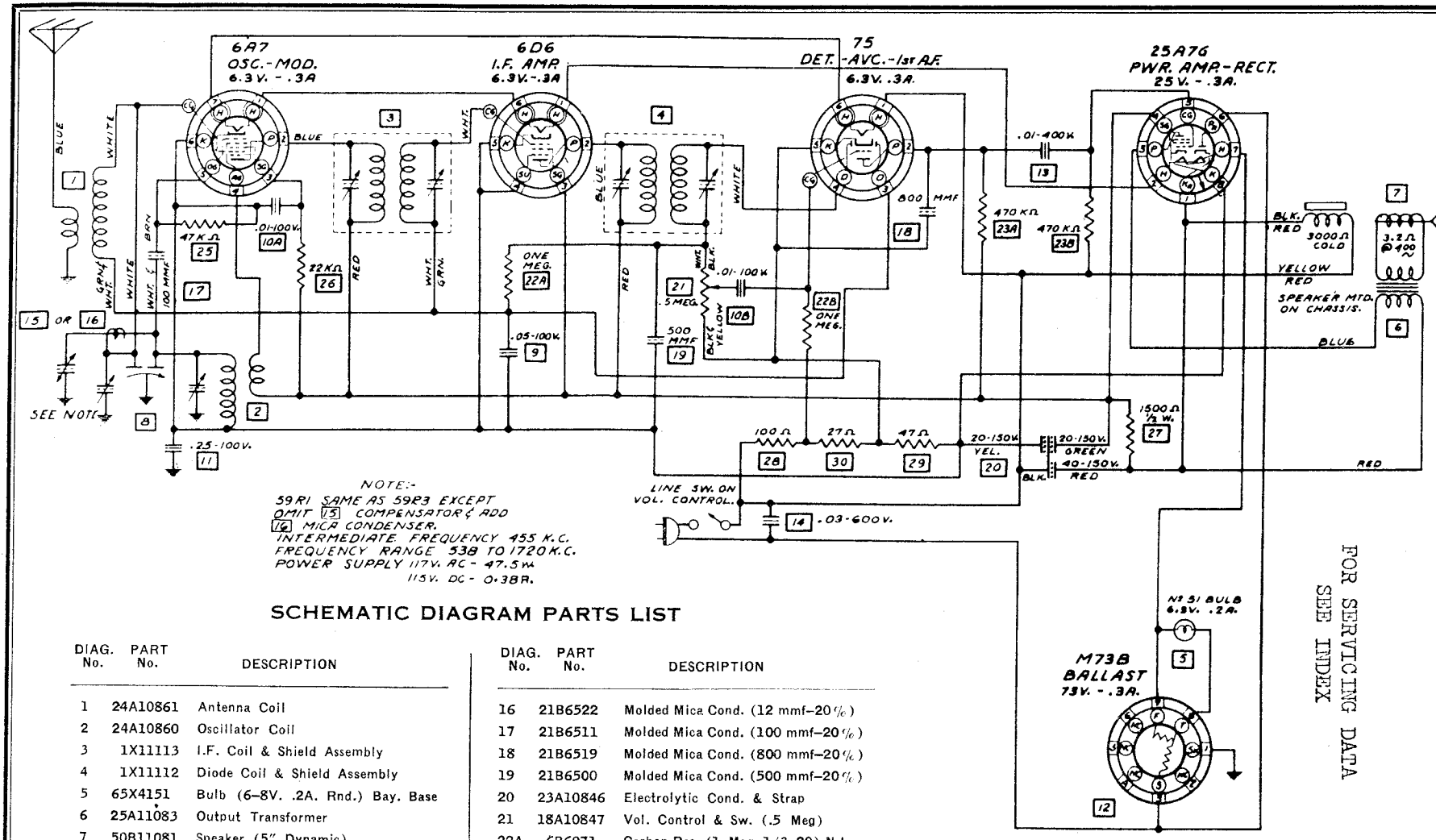

NOTE:-
59R1 SAME AS 59R3 EXCEPT
OMIT [15] COMPENSATOR & ADD
[16] MICA CONDENSER.
INTERMEDIATE FREQUENCY 455 K.C.
FREQUENCY RANGE 538 TO 1720 K.C.
POWER SUPPLY 117V. AC - 47.5 W.
115V. DC - 0.38 A.

CIRCUIT DIAGRAM MODEL 59T3

(Same circuit also used in early Type 59T1)

SCHEMATIC DIAGRAM PARTS LIST

DIAG. No.	PART No.	DESCRIPTION
1	24A10861	Antenna Coil
2	24A10860	Oscillator Coil
3	1X11113	I.F. Coil & Shield Assembly
4	1X11112	Diode Coil & Shield Assembly
5	65X4151	Bulb (6-8V. .2A. Rnd.) Bay. Base
6	25A11083	Output Transformer
7	50B11081	Speaker (5" Dynamic)
8	19B10111	Variable Condenser (Two Gang)
9	8S9805	Tubular Condenser (.05-100V.)
10A	8S9801	Tubular Condenser (.01-100V.)
10B	8S9801	Tubular Condenser (.01-100V.)
11	8S9810	Tubular Condenser (.25-100V.)
12	‡M73B	Ballast Tube
13	8S9809	Tubular Condenser (.01-400V.)
14	8A10866	Molded Paper Cond. (.03-600V.
15	20A11117	Compensating Condenser
16	21B6522	Molded Mica Cond. (12 mmf-20%)
17	21B6511	Molded Mica Cond. (100 mmf-20%)
18	21B6519	Molded Mica Cond. (800 mmf-20%)
19	21B6500	Molded Mica Cond. (500 mmf-20%)
20	23A10846	Electrolytic Cond. & Strap
21	18A10847	Vol. Control & Sw. (.5 Meg)
22A	6B6071	Carbon Res. (1 Meg-1/3-20) N.I.
22B	6B6071	Carbon Res. (1 Meg-1/3-20) N.I.
23A	6B6011	Carbon Res. (470,000-1/3-20) N.I.
23B	6B6011	Carbon Res. (470,000-1/3-20) N.I.
25	6B6020	Carbon Res. (47,000-1/3-20) N.I.
26	6B6050	Carbon Res. (22,000-1/3-20 N.I.
27	6B6065	Carbon Res. (1500-1/2-20) N.I.
28	6B6076	Carbon Res. (100-1/3-20) Ins.
29	6B6066	Carbon Res. (47-1/3-20) N.I.
30	17X11137	Ins. W.W. Res. (27-1/2-20)

MODEL 59T1 Late
MODEL 59T1 with
Permanic Speaker
Chassis 59R1
Schematic, Parts
NOT ON PERMANIC
SPEAKER TYPE.

GALVIN MFG. CO.

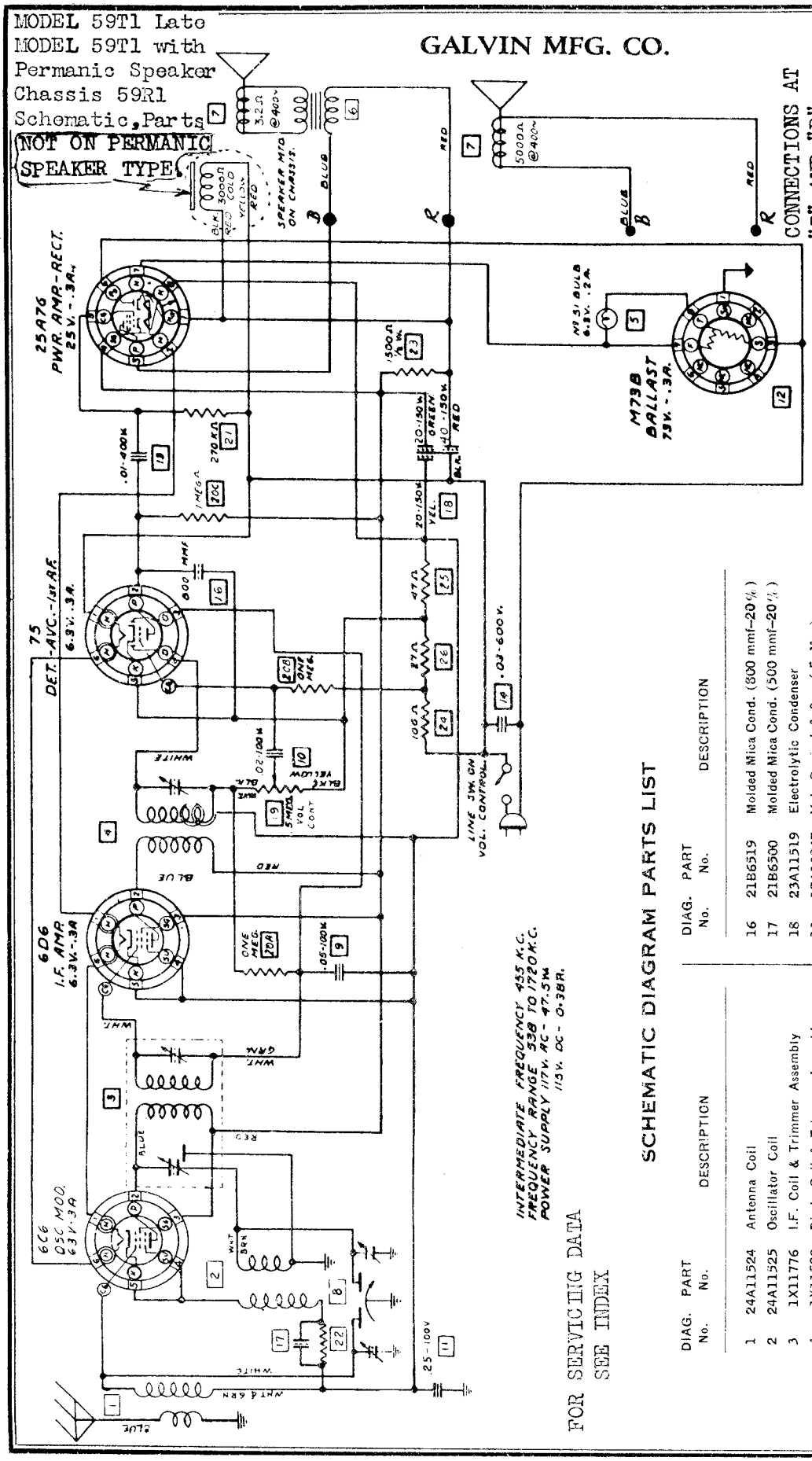

CIRCUIT DIAGRAM MODEL 59T1

AND

MODEL 59T1
(PERMANIC SPKR. TYPE)

CONNECTIONS AT "B" AND "R" FOR PERMANIC SPEAKER.

FOR SERVICING DATA
SEE INDEX

SCHEMATIC DIAGRAM PARTS LIST

DIAG. No.	PART No.	DESCRIPTION
1	24A11524	Antenna Coil
2	24A11525	Oscillator Coil
3	1X11776	I.F. Coil & Trimmer Assembly
4	1X11522	Diode Coil & Trimmer Assembly
5	65X4151	Bulb (6-8V. .2A. Rnd.) Bay. Base
7	1X12190	Speaker with Out. Trans. (5" Dyn.)
8	19B10111	Variable Condenser (Two Gang)
9	8S9805	Tubular Condenser (.05-100V.)
10	8S9817	Tubular Condenser (.02-100V.)
11	8S9810	Tubular Condenser (.25-100V.)
12	2M73B	Ballast Tube
13	8S9809	Tubular Condenser (.01-400V.)
14	8X10866	Molded Paper Cond. (.03-600V.)
16	21B6519	Molded Mica Cond. (800 mmf-20%)
17	21B6500	Molded Mica Cond. (500 mmf-20%)
18	23A11519	Electrolytic Condenser
19	18A10847	Vol. Control & Sw. (.5 Meg)
20A	6B6071	Carbon Res. (1 Meg-1/3-20) N.I.
20B	6B6071	Carbon Res. (1 Meg-1/3-20) N.I.
20C	6B6071	Carbon Res. (1 Meg-1/3-20) N.I.
21	6B6095	Carbon Res. (270,000-1/3-20) N.I.
22	6B6117	Carbon Res. (5600-1/2-10) Ins.
23	6B5065	Carbon Res. (1500-1/2-20) N.I.
24	6B6018	Carbon Res. (100-1/2-20) Ins.
25	6B6066	Carbon Res. (47-1/3-20) N.I.
26	17X11137	Ins. W.W. Res. (27-1/2-20)

©John F. Rider, Publisher

©John F. Rider, Publisher

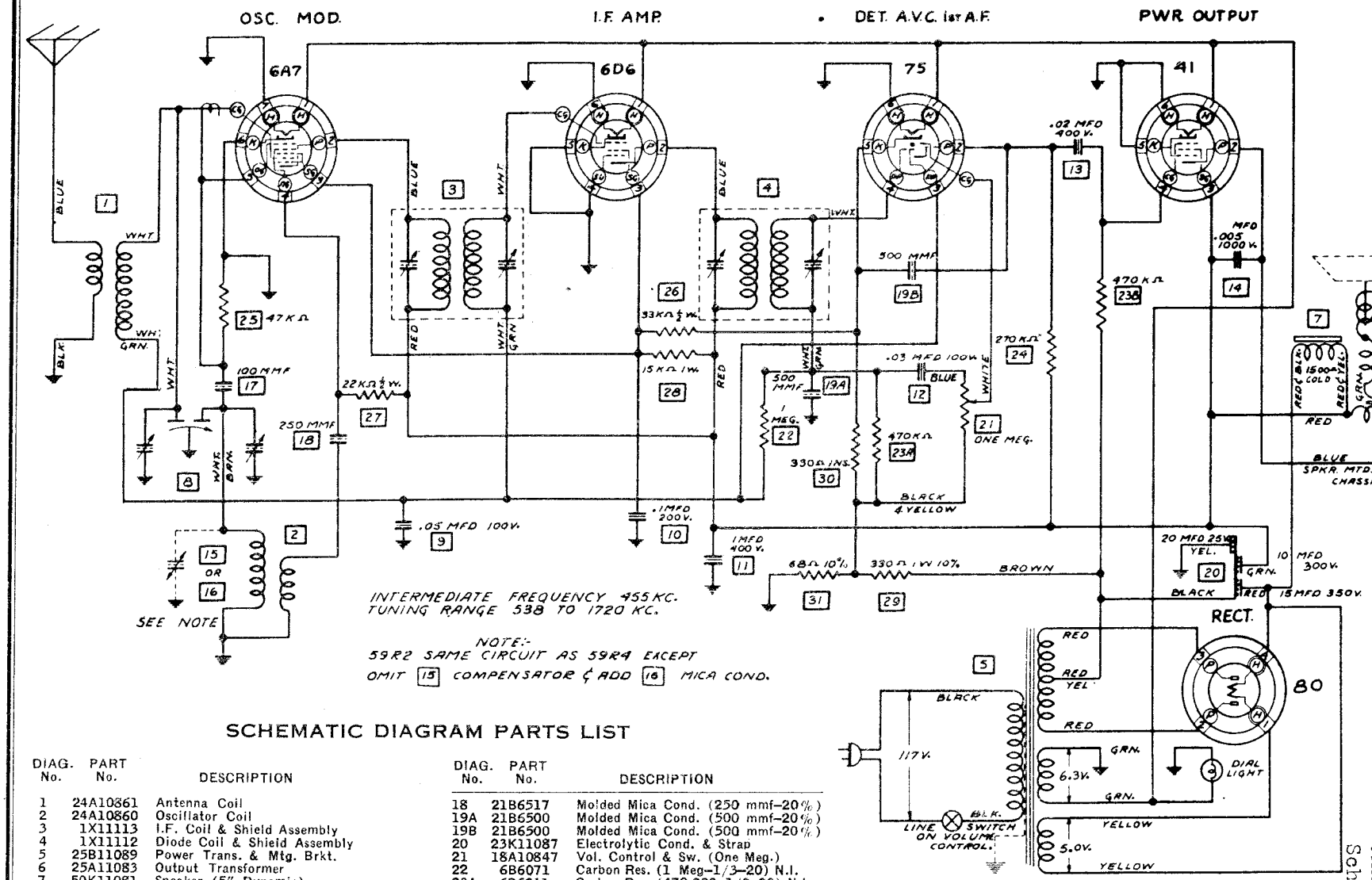

SCHEMATIC DIAGRAM PARTS LIST

DIAG. No.	PART No.	DESCRIPTION
1	24A10861	Antenna Coil
2	24A10860	Oscillator Coil
3	1X11113	I.F. Coil & Shield Assembly
4	1X11112	Diode Coil & Shield Assembly
5	25B11089	Power Trans. & Mtg. Brkt.
6	25A11083	Output Transformer
7	50K11081	Speaker (5" Dynamic)
8	19B10111	Variable Condenser (Two Gang)
9	8S9805	Tubular Condenser (.05–100V.)
10	8S9806	Tubular Condenser (.1–200V.)
11	8S9807	Tubular Condenser (.1–400V.)
12	8K11140	Spec. Tub. Condenser (.03–100V.)
13	8S9802	Tubular Condenser (.02–400V.)
14	8S9808	Tubular Condenser (.005–1000V.)
15	20A11117	Compensating Condenser
16	21B6522	Molded Mica Cond. (12 mmf–20%)
17	21B6511	Molded Mica Cond. (100 mmf–20%)
18	21B6517	Molded Mica Cond. (250 mmf–20%)
19A	21B6500	Molded Mica Cond. (500 mmf–20%)
19B	21B6500	Molded Mica Cond. (500 mmf–20%)
20	23K11087	Electrolytic Cond. & Strap
21	18A10847	Vol. Control & Sw. (One Meg.)
22	6B6071	Carbon Res. (1 Meg–1/3–20) N.I.
23A	6B6011	Carbon Res. (470,000–1/3–20) N.I.
23B	6B6011	Carbon Res. (470,000–1/3–20) N.I.
24	6B6098	Carbon Res. (270,000–1/3–20) N.I.
25	6B6020	Carbon Res. (47,000–1/3–20) N.I.
26	6B6012	Carbon Res. (33,000–1/2–20) Ins.
27	6B6088	Carbon Res. (22,000–1/2–20) N.I.
28	6B6013	Carbon Res. (15,000–1–20) N.I.
29	6B6103	Carbon Res. (330–1–10) N.I.
30	6B6010	Carbon Res. (330–1/2–20) Ins.
31	6B6063	Carbon Res. (68–1/3–10) N.I.

CIRCUIT DIAGRAM MODELS 59T2 and 59T4

FOR SERVICING DATA
SEE INDEX

GALVIN MFG. CO.

MODEL 59T2
Chassis 59R2
MODEL 59T4
Chassis 59R4
Schematic, Parts

MODEL 69K1 Early
Chassis 69R1
Schematic

GALVIN MFG. CO.

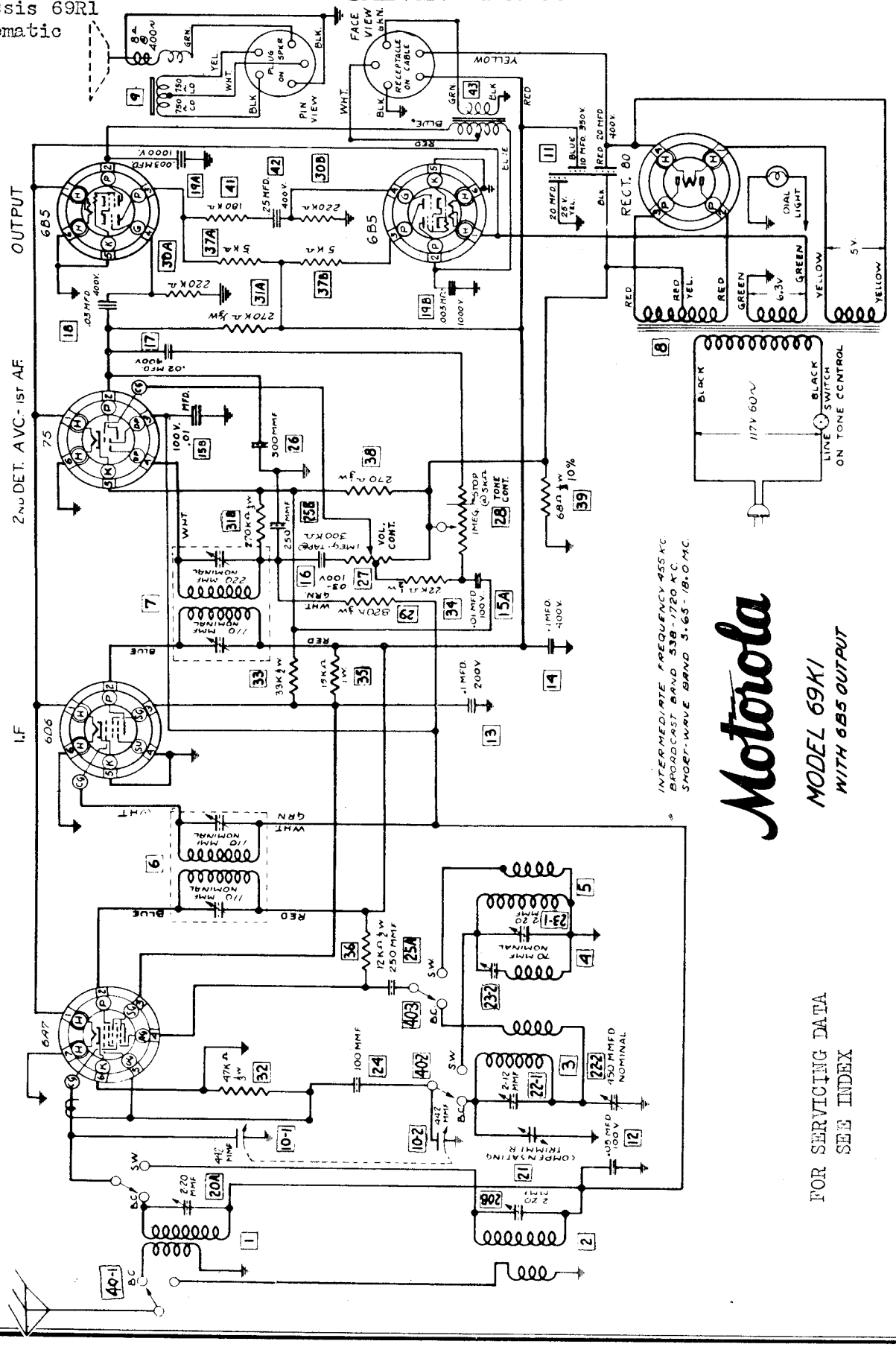

©John F. Rider, Publisher

GALVIN MFG. CO.

MODEL 69K1 Late
Chassis 69R1
Schematic, Parts

FOR SERVICING DATA
SEE INDEX

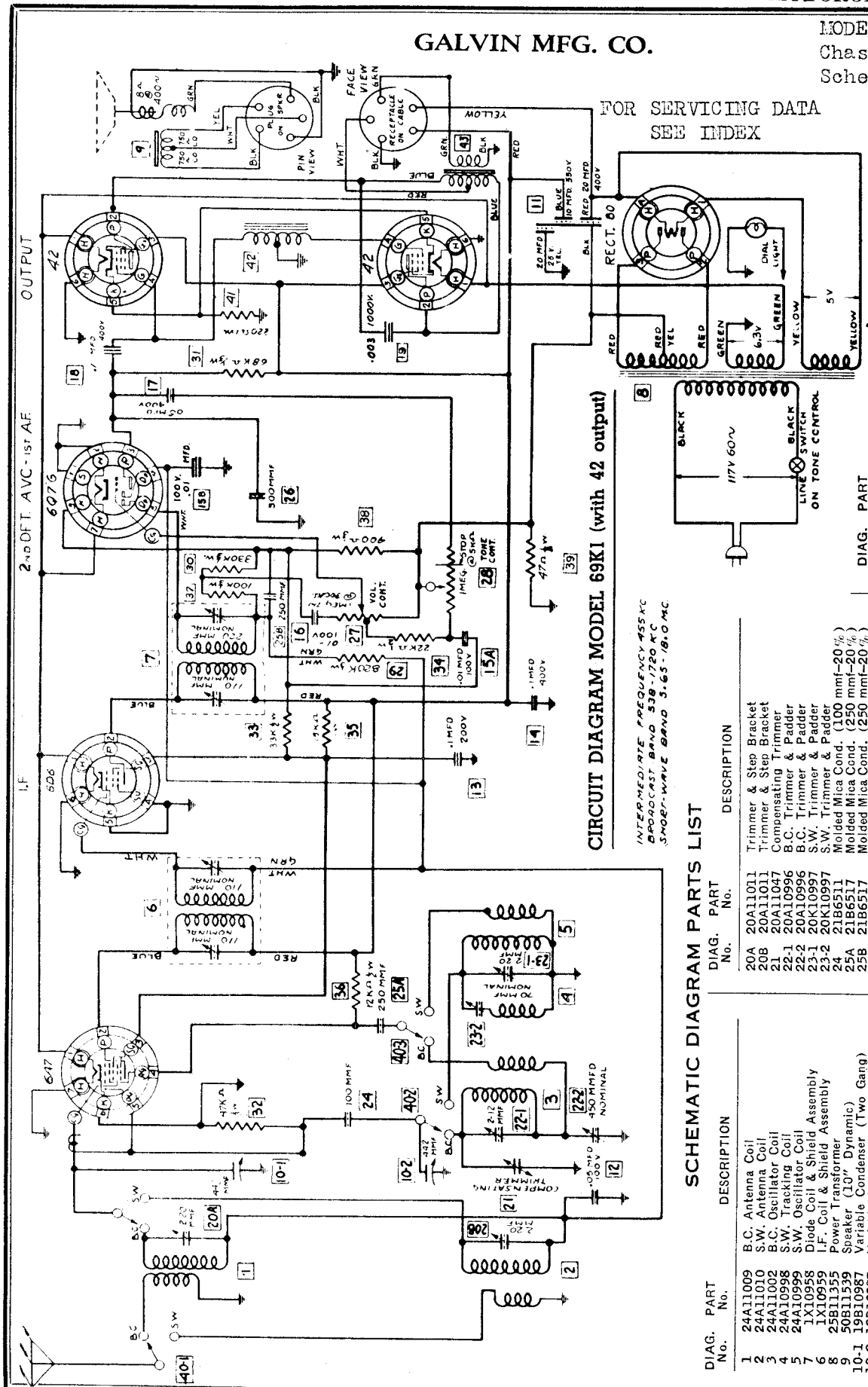

SCHEMATIC DIAGRAM PARTS LIST

DIAG. No.	PART No.	DESCRIPTION
1	24A11009	B.C. Antenna Coil
2	24A11010	S.W. Antenna Coil
3	24A11002	B.C. Oscillator Coil
4	24A10998	S.W. Tracking Coil
5	24A10999	S.W. Oscillator Coil
7	1X10958	Diode Coil & Shield Assembly
6	1X10959	I.F. Coil & Shield Assembly
8	25B11355	Power Transformer
9	50B11539	Speaker (10" Dynamic)
10-1	19B10987	Variable Condenser (Two Gang)
10-2	19B10987	Variable Condenser (Two Gang)
11	23K11357	Electrolytic Condenser
12	8S9805	Tubular Condenser (.05-100V.)
13	8S9806	Tubular Condenser (.1-200V.)
14	8A4092	Tubular Cond. & Strap (.1-400V.)
15A	8S9801	Tubular Condenser (.01-100V.)
15B	8S9801	Tubular Condenser (.01-100V.)
16	8A11942	Tubular Condenser (.01-100)
17	8A11941	Tubular Condenser (Lug) (.05-400)
18	8S9807	Tubular Condenser (.1-400)
19	8S9800	Tubular Condenser (.003-1000V.)
20A	20A11011	Trimmer & Step Bracket
20B	20A11011	Trimmer & Step Bracket
21	20A11047	Compensating Trimmer
22-1	20A10996	B.C. Trimmer & Padder
22-2	20A10996	B.C. Trimmer & Padder
23-1	20K10997	S.W. Trimmer & Padder
23-2	20K10997	S.W. Trimmer & Padder
24	21B6511	Molded Mica Cond. (100 mmf-20%)
25A	21B6517	Molded Mica Cond. (250 mmf-20%)
25B	21B6517	Molded Mica Cond. (250 mmf-20%)
26	21B6500	Molded Mica Cond. (500 mmf-20%)
27	18A10991	Vol. Control (One Meg. Tapped)
28	18A10992	Tone Contr. & Switch (One Meg.)
29	6B6000	Carb. Res. (820,000-1/3-20%) N.I.
30	6B6043	Carb. Res. (330,000-1/3-20%) N.I.
31	6B6125	Carb. Res. (68,000-1/3-20%) N.I.
32	6B6020	Carb. Res. (47,000-1/3-20%) N.I.
33	6B6012	Carb. Res. (33,000-1/2-20%) Ins.
34	6B6028	Carb. Res. (22,000-1/2-20%) Ins.
35	6B6013	Carb. Res. (15,000-1-20%) N.I.
36	6B6100	Carb. Res. (12,000-1/2-20%) N.I.

DIAG. No.	PART No.	DESCRIPTION
37	6B6029	Carb. Res. (100,000-1/3-20%) N.I.
38	6B6025	Carb. Res. (400-1/3-10%) N.I.
39	6B6128	Carb. Res. (47-1/3-10%) N.I.
40-1	40A10061	Band Switch Section
40-2	40A10061	Band Switch Section
40-3	40A10061	Band Switch Section
41	6B6126	Carbon Res. (220-1-20%) N.I.
42	25K11940	Input Choke
43	25B11636	Output Transformer

©John F. Rider, Publisher

MODEL 89K1
Chassis 89R1
Schematic

GALVIN MFG. CO.

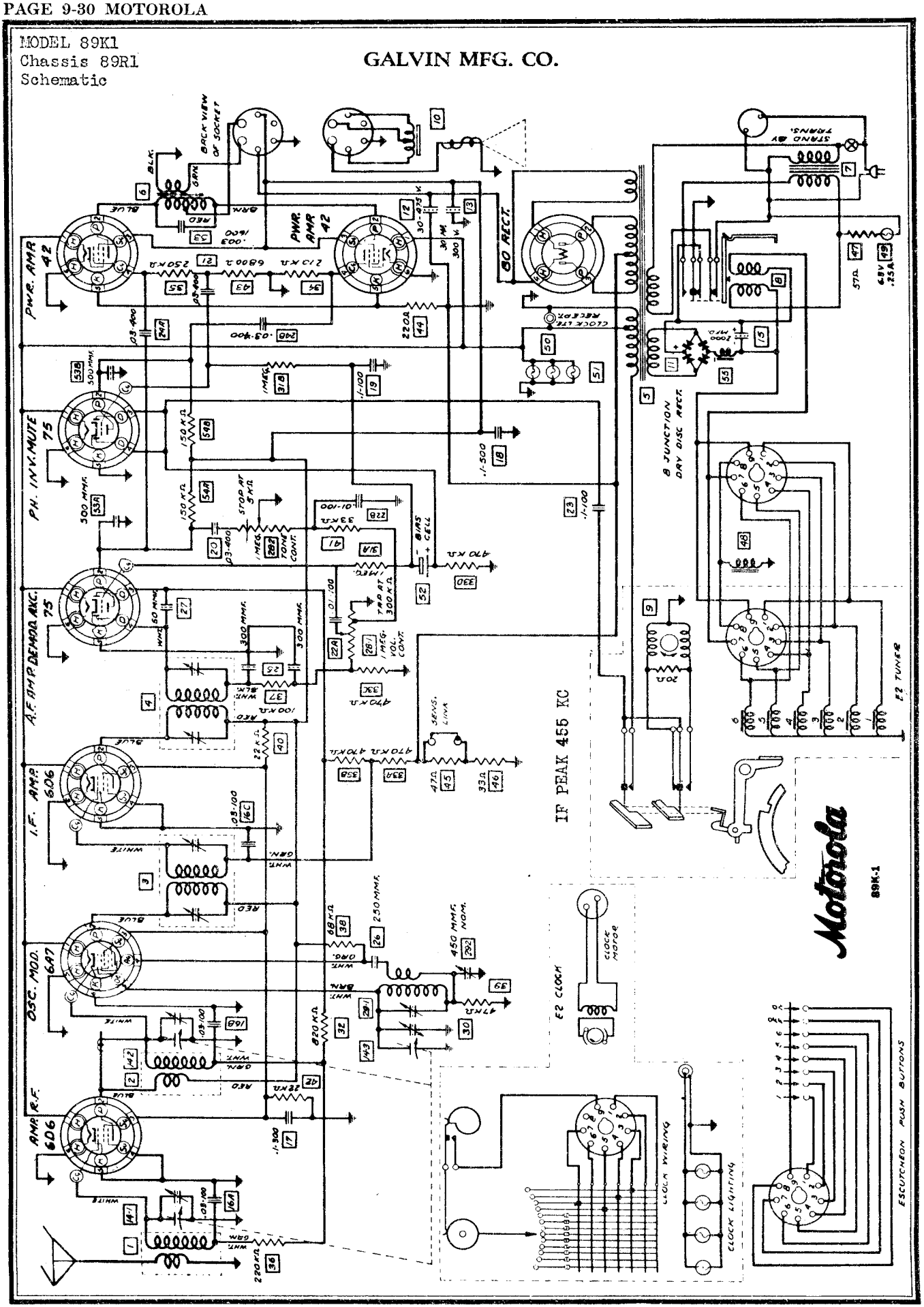

©John F. Rider, Publisher

GALVIN MI

47	17X11591	Ins. W. W. Res. (57-2-20)
48	1X11624	Tuner Magnet (Black)
49	65X10867	Bulb (6.3 V.-.25 A. Long) No. 44 Clear
50	65X12028	Bulb (6.3 V.-.25 A. Long) White No. 44 W
51	65X4151	Bulb (6.3 V.-1½ W. Round) No. 51 Clear
52	9X10089	Bias Cell
53	21B6500	Molded Mica Cond. (500 MMF-20%)
54	6B6130	Carbon Res. (150,000-1/3-10) N.I.
55	1X11918	R. F. Choke (Blue)
56	40X11975	Rotary Switch (SPST)
57	1X11511	E-2T Electric Tuner Assembly
58	1X11590	E-2C Clock Control Assembly
59	1X11585	E-2D Push Button Control Assembly
60	65X4874	Bulb (6-8 V.-1½ W. Round) White No. 50 W
61	59B11817	Volume Control Motor (89K2)

Fig. 1

MOTOR REVERSING SWITCH

MAIN MOTOR SWITCH

RF-AMP 6D6

OSC. MOD. 6A7

IF PEAK 455 KC

CLOCK MOTOR, CABLE & PLUG

15 MIN. SW. & CAMS

24 HR. CONTACTOR

96-15 MIN. CONTACTS

CLOCK CONT. CABLE & PLUG (PIN VIEW)

E2 CLOCK CONT.

TIME BUSS

SLIDER

STATION BUSS

OFF

TRIGGER

LATCH

STATION RING

GATE

MTR. SW.

REV. SW.

RED-BLU.

YEL.

GRN.

ORG.

PUSH BUTTON CONT. CABLE & PLUG (PIN VIEW)

E2D PUSH BUTTON CONTROL

P.B. SWITCH CONNECTIONS (REAR VIEW)

LEAD COLOR SAME AS CLOCK CABLE (*8 RED)

Clock Light Cable & Plug

PUSH BUTTON RECEPT.

CLOCK CABLE LEAD COLORS

1 WHT.-BRN.
2 WHT.-RED
3 WHT.-ORG.
4 WHT.-YEL.
5 WHT.-GRN.
6 WHT.-BLU.
7 BLACK
8 NOT USED
9 WHITE.

POWER RELAY CONNECTIONS

CIRCLED Nos TIE IN WITH SCHEMATIC

Diag. No.	Part No.	Description
1	24A11439	Antenna Coil and Mtg. Clip
2	24A11442	R.F. Coil and Mtg. Clip
3	1X11458	I.F. Coil and Shield Assembly
4	1X11457	Diode Coil and Shield Assem
5	25B10031	Power Transformer (89K1)
5	25B11706	Power Transformer (89K2)
6	25B11638	Output Transformer
7	25A11576	Standby Transformer
8	1X12012	Power Relay E2P
9	59B11216	Tuner Motor and Resistor

27	21B6513	M
28	18A11423	V
28	18A11781	V
29	20A10996	B
30	20A11047	C

©John F. Rider, Publisher

G. CO.

MODEL 89K2
Schematic
MODELS 89K1,89K2
Switch Details,Parts

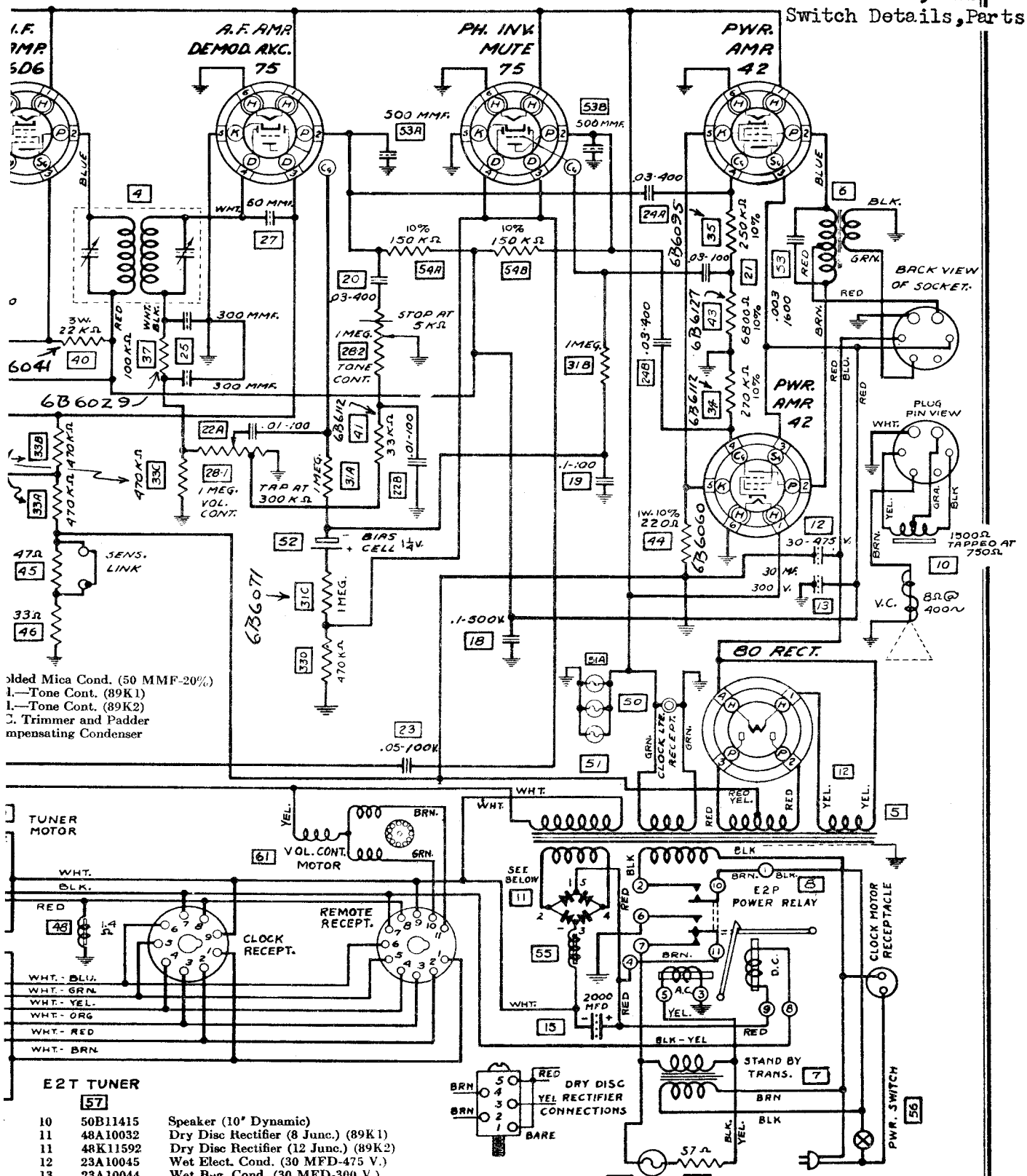

olded Mica Cond. (50 MMF-20%)
l.—Tone Cont. (89K1)
l.—Tone Cont. (89K2)
. Trimmer and Padder
mpensating Condenser

E2T TUNER
57

10	50B11415	Speaker (10" Dynamic)			
11	48A10032	Dry Disc Rectifier (8 Junc.) (89K1)			
11	48K11592	Dry Disc Rectifier (12 Junc.) (89K2)			
12	23A10045	Wet Elect. Cond. (30 MFD-475 V.)			
13	23A10044	Wet Reg. Cond. (30 MFD-300 V.)			
14	19B11454	Variable Condenser			
15	23A12220	Electrolytic Cond. (2000 MFD-8 V.)	21	8K11140	Spec. Tub. Cond. (.03-100 V.)
16	8S9803	Tubular Condenser (.03-100 V.)	22	8S9801	Tubular Condenser (.01-100 V.)
17	8S9815	Tubular Condenser (.1-300 V.)	23	8S9805	Tubular Condenser (.1-100 V.)
18	8A11464	Spec. Tub. Cond. (.1-500 V.)	24	8S9804	Tubular Condenser (.03-400 V.)
19	8A3302	Spec. Tub. Cond. (.1-100 V.)	25	21X11637	Metal Mica Cond. (300-300-30%)
20	8A11968	Spec. Tub. Cond. (.03-400 V.)	26	21B6517	Molded Mica Cond. (250 MMF-20%)

Part numbers of resistors will be found at symbols

GALVIN MFG. CO.

MODELS 89K1, 89K2
Trimmers, Alignment
Clock Data, Tuner Data

CHECKING CLOCK CONTINUITY

Although we have sealed the Time Tuning Clock against unauthorized tinkering, and have established a policy of voiding the guarantee if the seal is broken, it is possible to completely check the clock circuit for defects without removing the mechanism from its housing. This can be done by "ear" and by continuity.

The first step in checking a clock is to make sure that the motor runs and that it keeps accurate time. Just plug it into its receptacle on the chassis and check its time-keeping qualities against a known source of accurate time.

If this test indicates that the clock motor is not running, it would be advisable to make certain that the receptacle on the chassis base is "live" and that 110 volts, 60 cycle A.C. is available at that point.

Before attempting to check the clock continuity, it would be helpful to go through a little practice course in listening to the sounds the clock makes. First, remove the clock assembly from its mounting on the control panel of the receiver, and hold it in your hands while you turn the time set knob on the back. While turning the knob, hold the clock up to your ear, listening for the clicks. When the minute hand passes any of the four quarter-hour intervals into which each hour is divided, you will hear two clicks, the second of which falls very closely after the first one. These clicks are caused by the quarter-hour cam switch blades dropping off of the cams.

As you turn the time set knob, you will notice another single click which is a little louder and sounds a trifle more metallic than the double click which you get at the exact quarter-hour intervals. This single click will be heard when the minute hand is passing a point that is approximately half way between the quarter-hour positions. This click is caused by the contact on the twenty-four hour hand as it falls off of one time bar to make contact upon the next time bar.

If you will go through this operation several times, you will soon be able to identify these sounds. Once you are able to recognize them, you will be able to thoroughly check the continuity of the clock control circuit, without the necessity of looking inside the mechanism. Proceed as follows:

1. With the time set knob, turn the clock hands until they read fifteen minutes to twelve on the day cycle. Look through the peep-hole to make sure of this.
2. Slowly turn the time set knob forward until the minute hand indicates approximately two minutes to twelve. In the course of this movement you will hear, unless the clock is defective, a single click which indicates that the twenty-four hour contact has come to rest upon the twelve o'clock noon time bar.
3. Now *very slowly* continue to turn the time set knob forward until you hear the first click, which indicates that the top blade of the twenty-four hour cam switch has fallen off of the large cam, causing the cam switch circuit to close. As soon as you hear this first click, stop turning the time set knob, for if you turn it far enough to hear the second click, the contact will be broken. The trick is to turn it just far enough, but not too far.
4. Clear the clock of all previous settings by inserting a finger in the "OFF" position of the finger dial, and dialing counter-clockwise until the stop is reached.
5. With the round time-selecting knob on the front of the clock, turn the red time selecting pointer to 12:00 o'clock noon.
6. With a continuity meter, check continuity between Terminal No. 9 and all of the other terminals on the plug at the end of the clock cable. You should get no reading. Terminal No. 9 is connected to the common lead.
7. Dial the "OFF" position just as you would if you were setting up the clock to turn the radio off at 12:00 o'clock noon. Check continuity between Terminal No. 9 and Terminal No. 7. You should get a full scale reading indicating a complete circuit. Terminal No. 7 connects to the off relay when the clock is plugged into the chassis).
8. Dial Station No. 1 and check continuity between Terminal No. 9 and Terminal No. 1 of the clock cable. A full scale reading should result.
9. In their respective order, dial Stations 2, 3, 4, 5, and 6, checking continuity after each dialing between Terminal No. 9 and Terminals 2, 3, 4, 5, and 6, respectively. In each case you should get a full scale deflection of your continuity meter between Terminal No. 9 and the terminal which corresponds in number to the position you have dialed on the finger ring.

The procedure through which you have gone up to this point will, if the proper readings have been obtained, tell you that the slider on the time bar which represents the 12:00 o'clock noon position, is making a proper contact with each of the station rings and the "OFF" ring in the clock.

10. Next turn the clock hands knob to the 12:15 o'clock position, also turn the red time-selecting pointer to the 12:15 o'clock position, and repeat Steps 1 to 9 for the 12:15 o'clock position. To check the clock 100%, it will be necessary to repeat the procedure ninety-six times, one for each fifteen minute interval of the twenty-four hour day.

However, if the test which you have made at the 12:00 o'clock noon position shows the mechanism to be O.K. it should not be necessary to go through the entire operation. A test made at 12:00 o'clock noon and 12:00 o'clock midnight, and tests at 6:00 A.M. and 6:00 P.M. should give you a fairly accurate test. However, it is possible that, due to damage or improper adjustment of one individual time bar or slider, the clock fails to operate at one particular quarter-hour period, although it operates as it should at all other times. In this case, a continuity test would be advisable at the particular time setting at which failure has been noted.

THE CLOCK

As indicated in the circuit diagrams, the clock tuner is connected in parallel with the push-buttons. The clock cable and the push-button cable are interchangeable and either one may be plugged into the 9 contact receptacle on the chassis base, or the one on top of the tuner. The clock is sealed at the factory and breakage of the seal voids the guarantee. Defective clocks should not be serviced in the field but should be returned to the Motorola distributor in the territory.

Although the clock is sealed, it is easy to check its continuity for defects without removing it from its housing, by following the instructions on this page.

THE REMOTE CONTROL

The station tuning buttons in the remote control box are also connected in parallel with the escutcheon push-buttons. The remote cable, however, has eleven leads instead of nine. The two extra leads are for the volume control motor.

TO SET AUTOMATIC TUNER

1. From the set of rectangular call letter tabs provided with the radio, detach the proper ones for your six favorite stations. The station tabs should then be inserted over the station tuning buttons in the order of frequency. For example, the station with the lowest frequency should be set for No. 1 button, the next station on the dial to No. 2 button, etc. High frequency stations (1200 to 1500 K.C.) should always be set for buttons No. 5 and No. 6. This will assure accurate tuning.
2. Loosen the AUTOMATIC LOCKING KNOB, which is located on the automatic tuner facing the rear. This knob should be turned counter-clockwise four or five revolutions—far enough to assure plenty of looseness.
3. Press button No. 1 and hold it down until the electric tuner has come to a complete stop.
4. Continue to hold No. 1 button down and tune in manually (by means of tuning knob) the station whose call letters you have inserted over the button. After the station has been tuned perfectly, remove your finger from the button.
5. Proceed to set up the remaining buttons to the selected stations, following the same procedure.
6. Tighten the automatic locking knob very securely.

CAUTION: If by chance you wish to set up for automatic tuning, a police station in the 1712 K.C. Police band, you must be extremely careful in making the setting. There is a possibility of turning the mechanism so far to the high frequency end of the dial, that the latch bar with the trigger on it will not fall into the stop on the station control ring. If this occurs the mechanism will continue to run as long as the button is held down. To correct it, it will be necessary to go around to the rear of the receiver and turn the control ring back by hand until the stop will engage. If you are in doubt about this procedure, observe the operation of a latch-bar that works correctly, and notice how it falls into the stop on the control ring.

MOTOR AND REVERSING SWITCH ADJUSTMENTS

Although proper adjustment is important, it is by no means critical and can be easily accomplished as follows:

TO ADJUST MAIN MOTOR SWITCH

1. Insert 1/16" feeler gauge between the latch bars and the high side of the latch rings. Adjust the fibre latch gate stop plate so the 1/16" spacing will be maintained when the latch bars are at rest.
2. Check main motor switch (mounted on top side of magnet support plate). Contacts should be open 1/16" when latch bars are at rest.
3. Pull down on No. 1 latch bar and check closing of main motor switch. Contacts should just close firmly when latch bar comes within .02" of latch ring (high side).
4. When latch bar is touching high side of latch ring, the bottom switch leaf should be lifted slightly from the heavy spacer leaf. TO ADJUST AN IMPROPER SPACING, BEND HEAVY SPACER LEAVES—NEVER BEND CONTACT LEAVES.

TO ADJUST MOTOR REVERSING SWITCH

5. Check open position of reversing switch (mounted on bottom side of magnet support plate). With latch bars at rest the top contacts should be closed and the bottom contacts open.
6. Pull down on No. 6 latch bar until it touches *high* side of latch ring and check reversing switch contacts. Top contacts should still be closed and bottom contacts open.
7. Pull down on No. 6 latch bar until it touches *low* side of latch ring. Top contacts should now be just slightly open and bottom contacts just firmly closed, with lower switch leaf lifted slightly from heavy spacer leaf. TO ADJUST BEND SPACER LEAVES—NEVER BEND CONTACT LEAVES.

ALIGNMENT PROCEDURE—MODELS 89K1 AND 89K2

1. Connect signal generator to control grid on Osc.-Mod. tube (Type 6A7) through an .05 MF condenser and to chassis. Do not remove grid cap. Also connect output meter across speaker voice coil.
2. Set signal generator at 455 K.C. and carefully adjust the four I.F. trimmers located on top of I.F. coil cans) to point showing highest reading on output meter.
3. Connect signal generator to antenna and ground terminals, using a .0002 MF condenser in antenna lead.
4. Set signal generator and receiver dial both at 1700 K.C. and adjust oscillator trimmer until 1700 K.C. signal is heard. (Oscillator trimmer can be reached through hole in chassis base).
5. Set signal generator at 1400 K.C. and turn condenser gang to the signal at 1400 K.C. Adjust antenna trimmer (on rear section of gang) and R.F. trimmer (on front section of gang) to point showing highest reading on output meter.
6. Set signal generator at 600 K.C. and rock dial pointer at 600 K.C. position on dial scale while adjusting oscillator padder until combination is found which gives highest output reading. (Oscillator padder can be reached through hole in chassis base).

NOTE: If there is noise level at 600 K.C. padder can be adjusted to maximum noise without rocking gang and without use of signal generator. Use short wire for pick-up if necessary.

Fig. 2
89K1 and 89K2 TRIMMERS

SOCKET VOLTAGES—MODELS 89K1 AND 89K2

Numerals refer to socket terminals as indicated on circuit diagram.

TUBE	POSITION	1	2	3	4	5	6	7
6D6	R.F.	6.0 AC	225 V.	60	70	0	.....	
6A7	Osc.-Mod.	6.0 AC	225 V.	60	70	12.5	.....	0
6D6	I.F.	6.0 AC	225 V.	60	0	0	.....	
75	Det.-Avc.	6.0 AC	135 V.	60	0	12	.....	
75	Ph.-Inv.	6.0 AC	135 V.	0	0	0	.....	
42	Output	6.0 AC	245 V.	220	0	0	.....	
42	Output	6.0 AC	245 V.	220	0	12	.....	
80	Rect.	320	AC	AC	320	.....	.....	

SENSITIVITY DATA—MODELS 89K1 AND 89K2

Microvolt Input *	Generator Set at	Generator Connected to	Dummy Antenna Capacity	Leak Resistance	Output Meter **
1.0 Volts	400 Cycles	75 Grid (Diode)	.1 MF	.5 Meg.	2.82 Volts
7500	455 K.C.	6D6 Grid (I.F.)	.1 MF	.5 Meg.	2.82 Volts
125	455 K.C.	6A7 Grid	.1 MF	.5 Meg.	2.82 Volts
140	600 K.C.	6A7 Grid	.1 MF	.5 Meg.	2.82 Volts
30	600 K.C.	6D6 Grid (R.F.)	.1 MF	.5 Meg.	2.82 Volts
5	600 K.C.	Ant. Lead	.0002 MF	None	2.82 Volts

*For 1.0 Watt output.
**Output meter connected across voice coil.

©John F. Rider, Publisher

©John F. Rider, Publisher

ELECTRIC TUNER SERVICE SUGGESTIONS

Following you will find a list of troubles you may experience with the automatic tuning system as used in Models 89K1, 109K1, and their remote control versions. Each possible failure is followed by suggestions which may aid you in quickly solving your service problems with these models.

RECEIVER FAILS TO TURN "ON" AND "OFF"

1. **MASTER SWITCH "OFF"**—This switch is located on rear of chassis base. It must be in the "ON" position if the radio is to operate.
2. **OPEN RELAY**—Check relay magnet coils for open circuit. Replace if necessary. (NOTE: "ON" magnet is A.C. operated. "OFF" magnet is D.C. Do not reverse.)
3. **RELAY ARMATURE STUCK**—Check relay armature for sticking and freedom of movement. Readjust if possible or replace relay if necessary.
4. **RELAY COIL SHORTED**—This would reduce pulling power of relay magnet. Replace if necessary. "ON" magnet winding resistance should be 3.5 ohms. "OFF" magnet should measure 14.0 ohms.
5. **RELAY CONTACTS NOT CLOSING PROPERLY**—Double set of contacts for power transformer primary must close firmly in "ON" position and break cleanly (about 1/32") in "OFF" position. Triple set of contacts must reverse cleanly when relay reverses (about 1/32" break on open side and firm contact on closed side.) Adjust if necessary by careful bending.
6. **DEFECTIVE DRY DISC RECTIFIER**—If rectifier is defective, receiver will not turn OFF. A.C. input to rectifier should measure 6.75 volts with 115 volt A.C. line. (In remote control models 89K2 and 109K2, this value is 10.2 volts.) D.C. output from rectifier should measure 5 volts or higher. Measure voltage while pressing "ON" button. Replace rectifier if necessary.
7. **DEFECTIVE STAND-BY TRANSFORMER**—If primary or secondary of stand-by transformer is open, the set will not turn on. Secondary voltage should measure 13 volts A.C. with 115 volt line.
8. **SHORTED 2000 MF FILTER CONDENSER**—This is a filter and hash condenser connected across the dry disc rectifier.
9. **OPEN HASH CHOKE**—This choke looks like a tuning magnet and is connected in negative lead of rectifier output. Resistance .3 ohms.
10. **OPEN PUSH-BUTTON CIRCUIT**—Check push-button contacts on escutcheon, check cable for continuity and check plug receptacle on chassis-base for poorly soldered connections or open leads. Make sure plug fits firmly in receptacle. (NOTE: Nine lead cables from escutcheon and clock are interchangeable and either one may be plugged into the nine terminal receptacle on the chassis base or the one on top of the tuner.)
11. **LOW LINE VOLTAGE**—The relay will operate down to about 100 volts in the A.C. line. Do not try to make the receiver work on lower voltage.
12. **"ON" COIL OPEN**—Do not confuse this with the "ON" magnet in the relay. It is a duplicate of a station magnet and is mounted under the chassis base on the back apron and near the nine terminal receptacle. (Resistance 1.4 ohms.)
13. **"TIME ON" LIGHT GROUNDED**—If the circuit leading to the light is grounded, the set will not turn "OFF."

RECEIVER FAILS TO TUNE STATIONS

1. **DEFECTIVE STATION MAGNET**—An open magnet coil or a shorted one will not pull latch bar down. Replace if necessary. Resistance of station magnets should be 1.4 ohms. Also check balance of magnet circuit.
2. **DEFECTIVE DRY DISC RECTIFIER**—Check output as above. Station magnets require 3.8 to 5.0 volts D.C. Measure under load by pressing any station button.
3. **LATCH BAR STICKING**—Check latch bars for binding or for sticking in latch ring of previously tuned station. Check for burr on tip of latch. Also check alignment of latch bars with reference to latch rings. The tip of the latch bar and the trigger must both fall within the width of the latch ring. Bend carefully if necessary to center them.
4. **OPEN PUSH-BUTTON CIRCUIT**—Check as outlined above.
5. **POOR SWITCH CONTACTS**—Main motor switch must make positive contact when latch gate is pulled down by latch bar and the latch bar is resting on the *high* side of the latch ring. The reversing switch must reverse positively when the latch bar falls to the *low* side of the latch ring. Clean contacts with Carbona. If necessary adjust as per instructions on page 3.
6. **DEFECTIVE LATCH TRIGGER**—If trigger fails to pull latch gate down, main motor switch will not close. Check trigger spring and trigger pivot for freedom from binding. Replace latch bar assembly if necessary.
7. **DEFECTIVE MOTOR**—Replace if necessary.
8. **MOTOR RESISTOR OPEN**—Check 20 ohm resistor mounted across motor terminals. (In Models 109K1 and 109K2, this resistor is replaced with a 60 MF motor starting condenser.)
9. **POWER TRANSFORMER OPEN**—Check output of power transformer secondary that supplies motor current. Should measure 24 volts across winding. In Model 89K1 only, this winding has a tap at 6.3 volts for dial lights.

TUNER OPERATES SLUGGISHLY

1. **HIGH RESISTANCE IN MOTOR CIRCUIT**—Check main motor and reversing switches. Clean and adjust if necessary.
2. **BINDING IN MECHANISM**—Tune receiver manually to make sure there is no binding in dial drive assembly or tuner assembly.
3. **GEARS NOT PROPERLY MESHED**—Check all gears in assembly for binding due to improper meshing.
4. **MECHANISM NOT PROPERLY LUBRICATED**—Apply light oil sparingly to all bearings and moving parts.
5. **LOW LINE VOLTAGE**—Measure line voltage. The receiver is not designed to work on less than 100 volts.
6. **DEFECTIVE MOTOR**—Replace.
7. **DEFECTIVE MOTOR RESISTOR**—Replace. (In 109K1 and 109K2, a 60 MF condenser is used.)

FAILS TO TUNE ACCURATELY

1. **ORIGINAL SETTING NOT ACCURATE**—Set up stations carefully, following instructions in installation book. Set high frequency stations on the inner rings (No. 5 and No. 6), low frequency stations on the outer rings.
2. **TOO MUCH TENSION ON LOCKING LEVERS**—When the automatic locking screw is loose, the station rings should move freely. If they don't, check the tension of the three lock washers under the three locking levers and if they cause the levers to still hold the station rings partially locked, the screws which hold the levers in position should be loosened one-quarter to one-half turns.
3. **BINDING AT LOCKING SCREW**—The automatic locking screw passes through a triangular shaped support bracket before it screws into the rotor assembly. If the nut into which it screws is not concentric with the rotor, the locking screw shaft will wobble slightly as it turns and when tightened will throw the station setting off, due to binding between the shaft and the triangular bracket. If this causes trouble, remove the bracket and leave it off. Its main purpose was to support the back end of the rotor while the receiver was in transit. It is not needed for the operation of the tuner. It has been left out of late type receivers.
4. **AUTOMATIC LOCKING SCREW LOOSE**—If this screw is not securely tightened, each operation of the tuner will cause the latch rings to slip a trifle.
5. **TIP OF LATCH BAR DOES NOT FALL INTO NOTCH**—To tune accurately, the latch bar must fall into notch on latch ring far enough to lock the rotor assembly firmly. If rear end of latch bar hits magnet pole before tip reaches bottom of notch, it may be necessary to bend latch bar slightly. Always bend at magnet end.

LATCH BAR STICKS ON MAGNET POLE

1. **ARMATURE RIVET WORN**—There is a brass rivet at the tip of the armature, to prevent the armature freezing to the magnet. If this rivet is worn down, permitting the steel armature to actually touch the magnet pole, it may freeze in that position.
2. **LATCH TRIGGER CATCHES ON EDGE OF LATCH RING**—Realign latch bar by bending so tip and trigger fall within width of latch ring.

MOVES FROM STATION AFTER BUTTON HAS BEEN RELEASED

1. **CHECK MAIN MOTOR SWITCH**—If the main motor switch points are spaced too close together the bounce of the latch gate, as the trigger releases it, will cause the main motor switch to close momentarily, causing the mechanism to move slightly away from the station.

MODEL 6K
Schematic, Coils
Socket

GAMBLE-SKOGMO, INC.

Power Consumption - - 7.8 Amperes at 6.3 Volts

Power Output - - 6 Watts Undistorted at 6.3 Volts

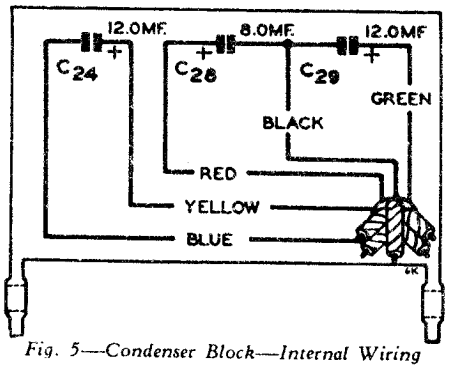

Fig. 5—Condenser Block—Internal Wiring

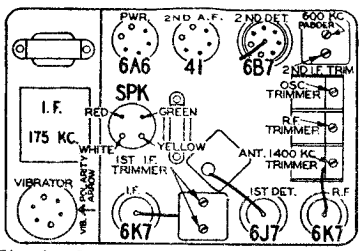

Fig. 2—Location of Tubes and Vibrator

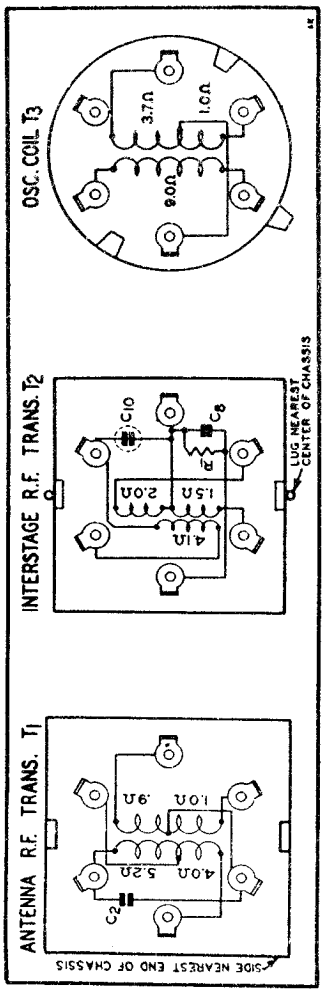

Fig. 4—R. F. and Oscillator Coil Base Terminal Arrangement and D. C. Resistance of Windings

Selectivity - - 45 KC Broad at 1000 Times Signal

Tuning Frequency Range 530 to 1575 KC

Series 6K

June 1936

Sensitivity—1.0 Microvolt Absolute
(LD switch in distant position)

Fig. 1—Schematic Circuit Diagram

©John F. Rider, Publisher

©John F. Rider, Publisher

Series 6K — Automobile Radio

I. F. Adjustment

Set the signal generator for a signal of 175 KC.

Connect the output of the signal generator through a .05 mf. condenser to the stator of the R.F. interstage section of the tuning condenser. (See Fig. 2 for location of this section.)

Connect the ground lead of the signal generator to the chassis ground.

Turn the Local-Distance switch to the Distance position and keep it in this position for all adjustments.

Set the volume control at the maximum position.

Attenuate the signal from the signal generator to prevent the levelling-off action of the AVC.

Then adjust the three I.F. trimmers until maximum output is obtained. The location of these trimmers is shown in Fig. 2.

1575 KC Adjustment

Set the signal generator for 1575 KC.

Turn the rotor of the tuning condenser to the full open position.

If a low capacity antenna is used, connect the shielded antenna lead from the chassis through a 150 mmf. condenser to the antenna post of the signal generator. (If high capacity, use 1500 mmf.) The antenna plug must be correctly inserted, dependent on the capacity of the antenna used.

For this and all subsequent adjustments keep the volume control at the maximum position and attenuate the signal from the signal generator to prevent AVC action.

Adjust the trimmer of the oscillator section of the three gang condenser until maximum output is obtained—see Fig. 2 for location of this trimmer.

1400 KC Adjustment

Set the signal generator for 1400 KC.

Turn the rotor of the tuning condenser carefully until maximum output is obtained.

Adjust the R.F. interstage and antenna 1400 KC trimmers for maximum output.

Do not change the setting of the oscillator trimmer.

600 KC Adjustment

Set the signal generator for 600 KC.

Connect the output of the signal generator through a .05 mf. condenser to the control grid of the 6K7 R.F. tube.

Turn the tuning condenser rotor until maximum output is obtained. Then turn the tuning condenser rotor back and forth, at the same time adjusting the 600 KC padder (see Fig. 2) until the peak of greatest intensity is obtained.

Re-connect the output of the signal generator to the shielded antenna lead through a 150 mmf. condenser (1500 mmf. if antena is high capacity).

Adjust the 600 KC antenna trimmer to maximum. This trimmer is reached from the outside of the case —see Fig. 3.

Adjusting Antenna 600 KC Trimmer

After the receiver is installed and the car antenna is connected, it will be necessary to adjust the antenna trimmer. Tune in a weak signal at approximately 600 KC with the volume control about three-fourths on. Turn the adjusting screw of the antenna 600 KC trimmer up or down until maximum output is obtained. See Fig. 3 for location of this trimmer.

As shown in this illustration, the antenna plug is inserted in one of two ways, depending on whether the car has a high or low capacity antenna. Full instructions are in the installation manual packed with each radio.

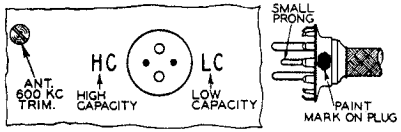

Fig. 3—Antenna Plug Insertion

In the voltage chart are given the voltages at the sockets with all tubes in and the set in operating condition. The antenna should be disconnected.

Replacement Parts

There is a large letter on the chassis which identifies the set as to major part changes. When ordering parts please be sure to mention the series number and this large letter.

MISCELLANEOUS

SOCKETS

Part No.		Description	List Price
P-3A223	6J7	Tube Socket	$0.15
P-3A211	6K7	Tube Socket	.15
P-3A205	6A6	Tube Socket	.15
P-3A116	41	Tube Socket	.10
P-3A120	6B7	Tube Socket	.15
P-3A229		6 Prong Socket (External Speaker)	.15
P-3A226		Antenna Socket	.10
P-3A228		Vibrator Socket	.15
P-3A231		4 Prong Socket (Internal Speaker)	.10

SPEAKER

P-12A242		6" Dynamic Speaker	$4.35

GENERAL

Part No.		Description	List Price
P-19A26		Vibrator Unit	$4.10
Specify Name and Model of Receiver		Chassis Case Only	3.80
		Chassis Case Cover Only	3.05
		Spring Clamp Button	.10
		Tone Control Knob	.10
		Local-Distance Switch Knob	.10
		8-32 x 3/16" Headless Cup Point Set Screw Doz.	.15
P-30X14		Grid Clip only—Glass Tube	.10
P-30X44		Grid Clip only—Metal Tube	.10
P 32X30		Tube Shield Base	.10
P-32X58		Tube Shield	.15
P-2A54		Local-Distance Switch	.40

TRANSFORMERS AND COILS

Part No.	Code	Description	List Price
P-9A580	T1	Antenna Transformer & Can Assembly	$1.60
P-9A581	T2	Interstage Transformer & Can Assembly	1.55
P-9A582	T3	Oscillator Coil & Can Assembly	.85
P-9A583	T4	1st I. F. Coil & Can Assembly	1.45
P-9A584	T5	2nd I. F. Coil & Can Assembly	1.80
P-50X32	T6	Input Transformer	1.30
P-51X43	T7	Output Transformer	1.60
P-53X124	T8	Power Transformer	3.10
P-9A586	L1, L3	Filament Reactor, R.F. "B" Reactor } One Assembly	.55

TRANSFORMERS AND COILS (Continued)

Part No.	Code	Description	List Price
P-9A588	L4	"A" Line Reactor	.20
P-52X45	L5	"B" Reactor	.80
P-9A585	L6	"B" Reactor	.30
P-9A587	L7	Vibrator Reactor	.50
P-9A614	L10	Filament Choke	.20

RESISTORS

CARBON

Part No.	Code	Resistance	Wattage	List Price
P-A94504	R1	500,000 Ohms	0.2	$0.15
P-C94173	R2	17,000 Ohms	1.0	.15
P-B94203	R3	20,000 Ohms	0.5	.15
P-A95105	R4	1 Megohm	0.2	.10
P-A95204	R5	200,000 Ohms	0.2	.10
P-A94452	R7	4,500 Ohms	0.2	.15
P-A94201	R8	200 Ohms	0.2	.15
P-B95503	R9	50,000 Ohms	0.5	.10
P-A95203	R10	20,000 Ohms	0.2	.10
P-A95254	R11	250,000 Ohms	0.2	.10
P-A95504	R12	500,000 Ohms	0.2	.10
P-B94252	R13	2,500 Ohms	0.5	.15
P-B95101	R15	500 Ohms	0.5	.10
P-C95303	R16	30,000 Ohms	1.0	.10
P-B94500	R17	50 Ohms	0.5	.15
P-B94500	R18	50 Ohms	0.5	.15

VARIABLE

P-36X217	R6	500,000 Ohms	Volume Control & Switch	1.00
P-40X212	R14	1 Megohm	Tone Control	.70

CONDENSERS

TUBULAR

Part No.	Code	Capacitance	Voltage	List Price
P-46X80	C4	.05 mf.	180	$0.15
P-46X181	C5	.10 mf.	240	.15
P-46X80	C13	.05 mf.	180	.15
P-46X185	C15	.04 mf.	180	.15
P-46X161	C19	.01 mf.	600	.15
P-46X189	C20	.25 mf.	360	.30
P-46X105	C21	.10 mf.	360	.20
P-46X143	C22	.25 mf.	360	.30
P-46X120	C23	.01 mf.	360	.15
P-46X101	C25	.006 mf.	600	.15
P-46X98	C26	.10 mf.	180	.20
P-46X105	C30	.10 mf.	360	.20
P-46X135	C31	.5 mf.	180	.40
P-46X183	C32	.0085 mf.	1,600	.20
P-46X135	C33	.5 mf.	180	.40
P-46X98	C34	.10 mf.	180	.20

ELECTROLYTIC

P-45X211	C24	12 mf.	25	Electrolytic Block	2.70
	C28	8 mf.	450		
	C29	12 mf.	450		

MOLDED

P-47X66	C2	30 mmf.		.15
P-47X53	C8	35 mmf.		.10
P-47X57	C14	100 mmf.		.10
P-47X65	C18	250 mmf.		.15
P-47X41	C27	2,000 mmf.		.20
P-47X41	C35	2,000 mmf.		.20

TRIMMER

P-17A48	C1	25-115 mmf.	Antenna Trimmer	.20
	C3		Antenna Trimmer—Part of Gang Condenser	
	C4		Oscillator Trimmer—Part of Gang Condenser	
P-17A46	C7	900-1,300 mmf.	600 KC Oscillator Padding Cond.	.55
	C16	70-150 mmf.	2nd I. F. Primary Trimmer	
	C9		Interstage Trimmer Part of Gang Condenser	
P-17A33	C11	70-150 mmf.	1st I. F. Trimmer	.40
	C12	70-150 mmf.		

MISCELLANEOUS

	C10	40 mmf.	Integral Part of Interstage Transformer Assembly
	C17	150 mmf.	Integral Part of 2nd I. F. Transformer Assembly
P-14A51	Three Section Gang Condenser Assembly complete with Drive Gears		$4.50

INSTALLATION ITEMS

CABLE AND FLEXIBLE SHAFT ASSEMBLIES

Part No.	Quan. Used	Description	List Price
P-18A40	2	20" Volume Control or Tuning Control Flexible Drive Shaft	ea. $1.10
P-18A42	2	25" Volume Control or Tuning Control Flexible Drive Shaft	ea. 1.30
P-18A44	2	36" Volume Control or Tuning Control Flexible Drive Shaft	ea. 1.65
P-13X252	1	Pilot Light Cable less Lamp	.65
P-13X253	1	48" Antenna Cable & Plug	.95
P-13X227	1	Battery Cable (long section with fuse receptacle)	.35
P-13X234	1	"A" Cable—Short Section Connected to Chassis (Part of Chassis Assembly)	.35

MOUNTING BOLT ASSEMBLY

P-20X59	3	Double End Hex Bolts for Mounting Chassis to Dash	ea. .10
	3	5 16"—18 Spring Locknut for above Mounting Assembly	doz. .10
P-19X18	6	Flat Washers for above Mounting Assembly	doz. .15
	6	5 16"—18 Hex Nuts for above Mounting Assembly	doz. .15
	1	5 16" Shakeproof Lockwasher to Ground Chassis Case to Metal Dash Surface on Engine Side	doz. .10

MISCELLANEOUS MOUNTING ITEMS

P-7A32	1	Pilot Light Bulb	.20
P-16X14	1	20 Ampere Fuse	.10
P-16X3	1	Fuse Shield	.10
P-21A6	1	Distributor Suppressor	.35
P-48X27	1	Generator Condenser	.45
P-21A5	1	Choke Condenser Unit (Not Shipped with Set)	1.50
P-21A7		Spark Plug Suppressors (Not Shipped with Set)	ea. .35

CONTROL HEAD AND PLATE ASSEMBLY

Part No.	Quan. Used	Description	List Price
*P-20A27	1	No. 4 Control Head only with 3/8" Hex Nut	3.00
*P-20A28	1	Volume Control Fitting complete with Retaining Spring, 3/8" Hex Nut and Lock Washer	.25
*	1	Dial Scale (Specify Name and Model of Radio)	.10
*P-15X45	1	Pointer	.10
*	1	Pointer Screw 3-48 x 5 16"	doz. .10
†P-17X13	1	Dial Crystal	.25
†		Control Knobs—Specify Car, Year and Model	ea. .25

NOTE: Prices of Instrument Panel Plate Kits are shown in Chart on Page 5.

* Shipped with each Set
†Shipped with Panel Kit

ROOF MOUNTING SPEAKER KITS

1936 BUICK, CHEVROLET, PONTIAC, OLDSMOBILE

Part No.	Description	List Price
P-21A27	SPEAKER KIT ASSEMBLY COMPLETE Includes	$5.35
P-12A234	5¼" Dynamic Speaker	3.05
P-23A56	Mounting Kit—Includes Trim Ring, Speaker Housing, Self Tapping Screws & Clamp Springs	2.00
P-13X248	Speaker Cable Assembly Complete	1.05
P-21A28	SPEAKER KIT ASSEMBLY COMPLETE Includes	9.65
P-12A233	8" Dynamic Speaker	6.65
P-23A57	Mounting Kit—Includes Trim Ring and Self Tapping Screws	3.00
P-13X248	Speaker Cable Assembly Complete	1.05

1936 FORD—STANDARD AND DELUXE

Part No.	Description	List Price
P-21A29	SPEAKER KIT ASSEMBLY COMPLETE Includes	4.15
P-12A234	5¼" Dynamic Speaker	3.05
P-23A58	Mounting Kit—Includes Hex Nuts, Lockwashers and Bolts	.40
P-13X248	Speaker Cable Assembly Complete	1.05

Prices subject to change without notice.

VOLTAGES AT SOCKETS

Antenna Plug Withdrawn — L-D Switch in Distant Position — Battery 6.2 Volts under Load

Type of Tube	Function	Across Heater	Plate to Ground	Screen to Ground	Cathode to Ground
6K7	R.F.	5.6	260	110	3
6J7	1st Det.	5.6	260	110	
6K7	I.F.	5.6	260	110	3
6B7	2nd Det.	5.6	55	50	
41	2nd A.F.	5.7	255	55	30
6A6	Pwr.	5.7	275		

To calibrate the radio, tune in a station of known frequency. At the back of the control head is the calibration screw. Remove the pilot lamp assembly. Insert a fine blade screwdriver and turn this screw until the pointer on the dial scale is at the frequency of the station being received. The knob must be held during this adjustment.

If the control head is inaccessible it may be calibrated by setting the pointer from the front. Remove the crystal by inserting a knife blade under the lower edge. Loosen the pointer screw, set the pointer and retighten.

GAMBLE-SKOGMO, INC.

MODEL 71C
Schematic, Socket
Alignment

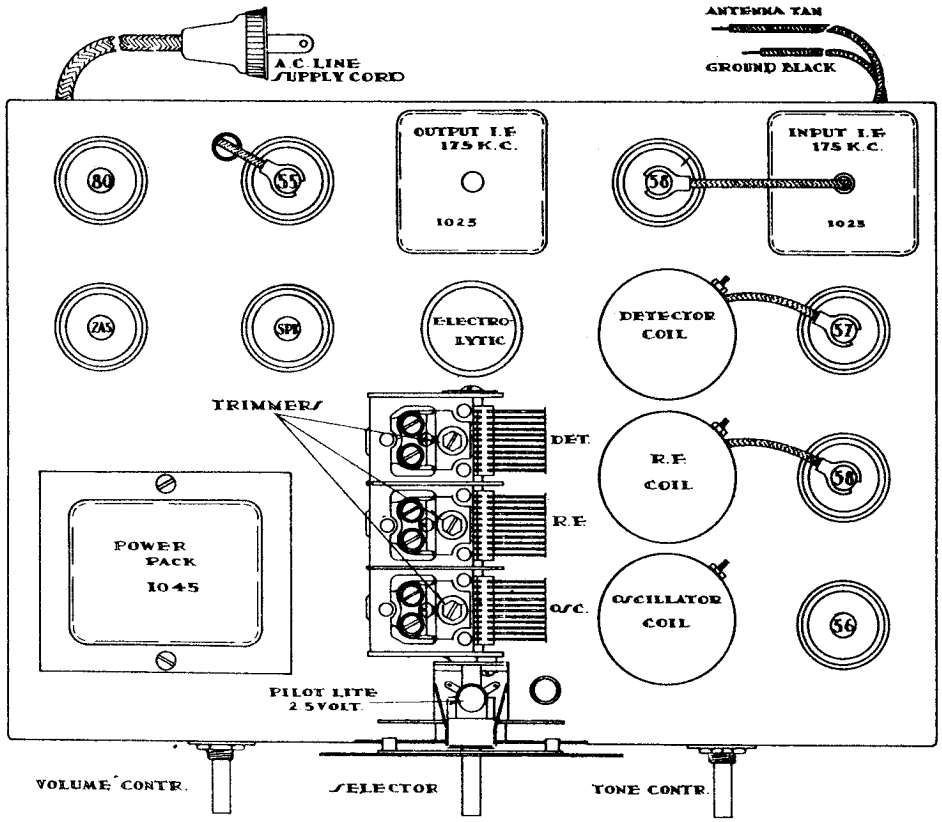

3J190001 - 3K192015.

SERVICE NOTES

To peak I.F. transformers connect oscillator (set at 175 KC) to grid of 57 first detector and (Black) ground wire. Adjust four trimmers from bottom of chassis (one nut and one screw on each transformer trimmer) to resonance (maximum deflection on an output meter connected across the primary of the speaker input transformer).

Connect an oscillator in series with a 200 MMFD condenser to the Tan (Antenna) wire and Black (ground) wire, with the oscillator set at 1720 KC and the variable condenser at its minimum position (extreme right of its rotation) adjust trimmer of oscillator (front) section of variable condenser to resonance. Set oscillator to 1400 KC and rotate variable condenser until signal is tuned in, then adjust ANT. and R.F. trimmers (center and rear sections of condenser) to resonance. Check output at 1200, 1000, 800, and 600 Kilocycles, bend plates of center and rear sections of variable condenser only if necessary.

MODEL 71C.

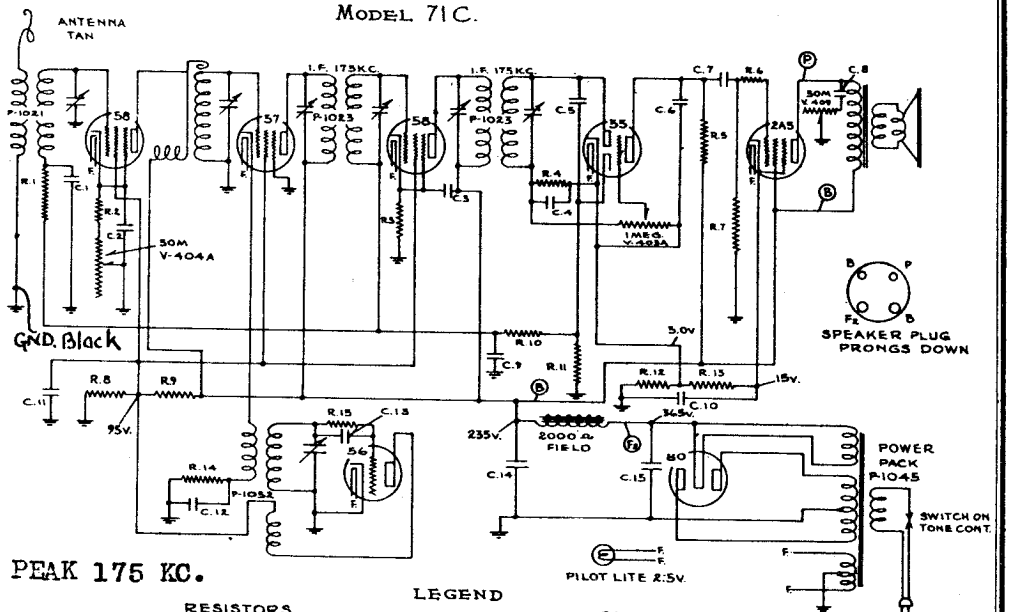

IF PEAK 175 KC.

LEGEND

RESISTORS

Nº	VALUE	Nº	VALUE
R.1 :-	500M	R.9 :-	15M *
R.2 :-	400	R.10 :-	1MEG.
R.3 :-	400	R.11 :-	500M
R.4 :-	500M	R.12 :-	150 *
R.5 :-	250M	R.13 :-	300 *
R.6 :-	100M	R.14 :-	10M
R.7 :-	500M	R.15 :-	250M
R.8 :-	25M *		

NUMBERS PREFIXED BY 'P' OR 'V' ARE PARTS.
* R.8, R.9, R.12 & R.13 IN ONE UNIT P-1049
* C.10, C.14, & C.15 " " " P-1047

CONDENSERS

Nº	VALUE	Nº	VALUE
C.1 :-	.05	C.9 :-	.05
C.2 :-	.05	C.10 :-	12.0MF. *
C.3 :-	.05	C.11 :-	.05
C.4 :-	500MMF.	C.12 :-	.05
C.5 :-	500MMF.	C.13 :-	500MMF.
C.6 :-	500MMF.	C.14 :-	4.0MF. *
C.7 :-	.02	C.15 :-	8.0MF. *
C.8 :-	.1		

VOLTAGES TAKEN FROM POINTS INDICATED TO CHASSIS GROUND. VOLUME CONTROL ON FULL, WITH 119 VOLTS A.C. LINE.

3322

©John F. Rider, Publisher

MODEL 72
Chassis 8,8X
Schematic,Socket
Trimmers,Voltage

GAMBLE SKOGMO, INC.

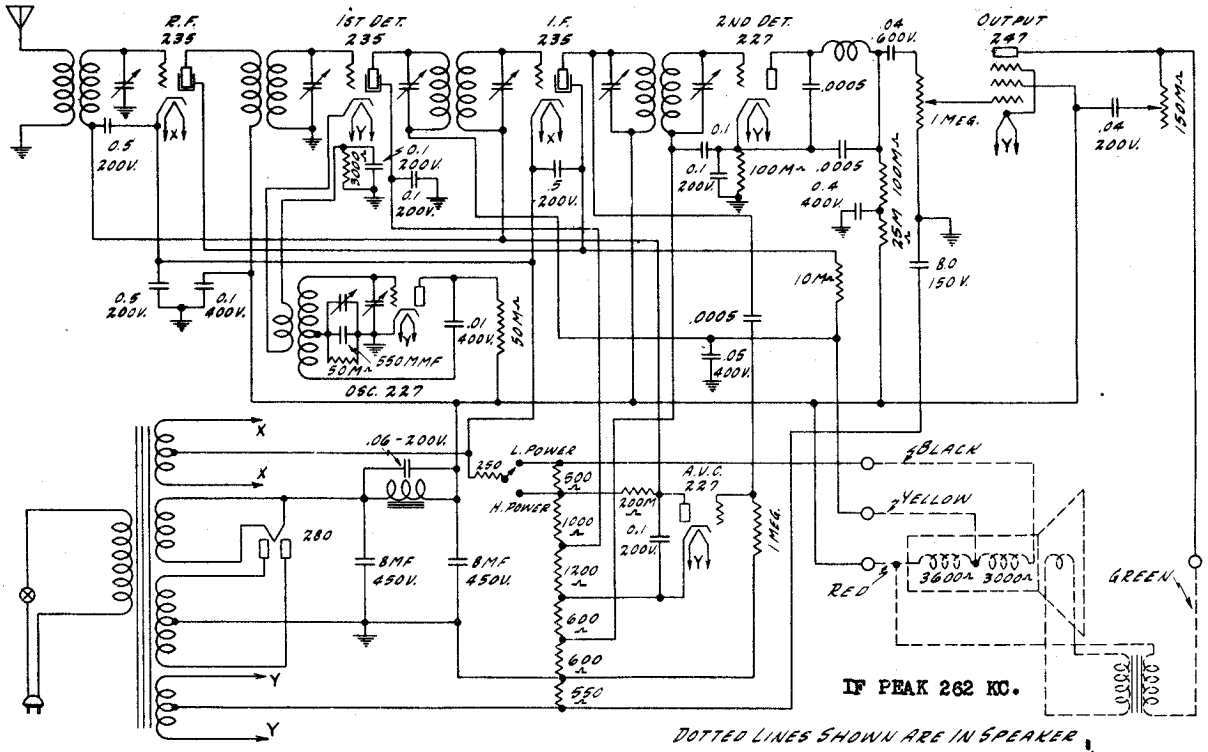

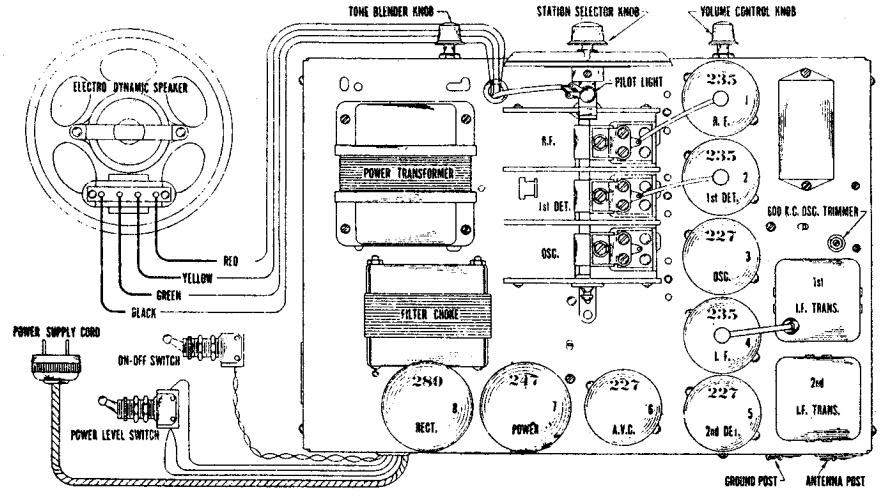

Top View of Chassis Showing Tube Location and Speaker Connections

Tube	A Volts	B Volts	V Volts	Scr. Volts	Plt. Crnt.
RF	2.3	190	2.3[1]	68.	3.8
1st Det	2.3	190	6.5	70.	2.0
Osc.	2.3	80	15-50[2]		4.7
IF	2.3	190	2.3[1]	68.	3.6
2nd Det	2.3	150	20.		.4
AVC	2.3	65[3]	40. [4]		0.
Power	2.35	260	20 [5]	280.	32.
Rect.	5.				41. [6]

[1] Across 250 ohm series resistor
[2] Governed by setting of tuning condenser
[3] Across 1000 and 1200 ohm sections of shunt resist
[4] Across two 600 ohm sections of shunt resistor
[5] Across 550 ohm series resistor
[6] Per Anode.

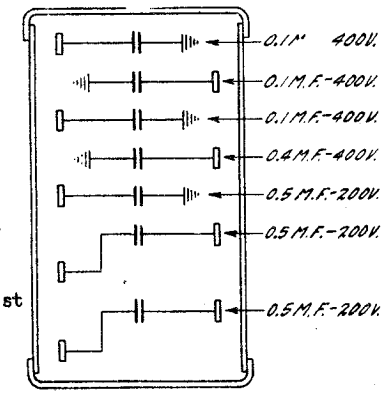

CHASSIS 8X is for 25 cycle operation, and is same as CHASSIS 8 except for power transformer and use of untuned filter system. The .06 mfd condenser connected across the filter choke, as shown in the schematic, is not used.
CHASSIS 8X can be used on a 60 cycle line. If hum is too loud, the above-mentioned .06 mfd condenser can be added.

©John F. Rider, Publisher

MODELS 401,402
Schematic,Socket
Trimmers,Parts

GAMBLE-SKOGMO, INC.

MODEL 526
Schematic,Socket
Trimmers,Alignment
Parts,Voltage

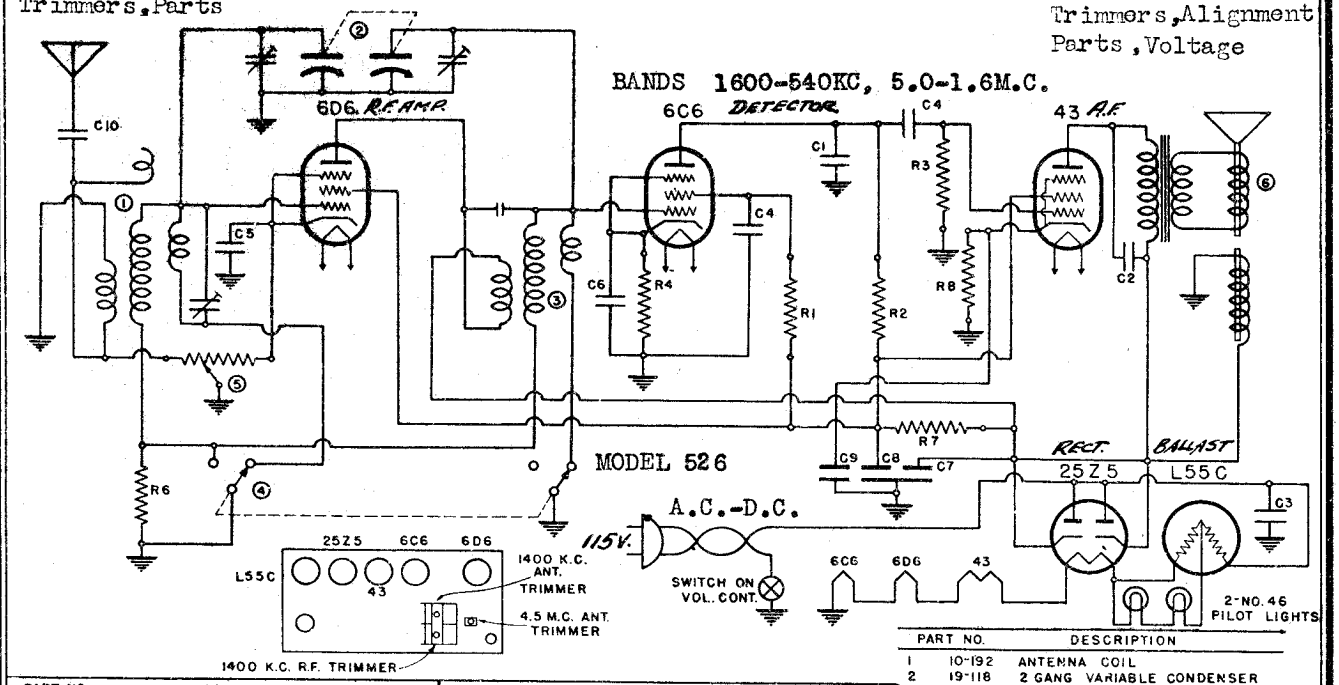

PART NO.		DESCRIPTION
R1	6020	2 MEG OHM 1/3 WATT CARBON RES.
R2	6017	1 " " " " "
R3	6018	500,000 " " " " "
R4	6025	50,000 " " " " "
R6	6010	75 " " " " "
R7	60-147	2000 " 1/2 " " "
R8	60-148	600 " " " " "

PART NO.			DESCRIPTION
C1	1501	.0001 MFD.	MICA CONDENSER
C2	1651	.004 "	600 V. TUBULAR CONDENSER
C3	1607	.05 "	400 V. " "
C4	1603	.01 "	" " "
C5	1622	.05 "	200 V. " "
C6	1600	.1 "	" " "
C7	18-212	30 "	ELECTROLYTIC
C8	18-212	8 "	"
C9	18-212	4 "	25 V. "

PART NO.		DESCRIPTION
1	10-192	ANTENNA COIL
2	19-118	2 GANG VARIABLE CONDENSER
3	10-193	R.F. COIL
4	69-113	WAVE SWITCH
5	24-112	VOLUME CONTROL WITH SWITCH
6	79-233	SPEAKER
G10	1670	.001 MFD 600 V TUBULAR COND

FILAMENT VOLTAGE MEASURED ACROSS SOCKET. ALL OTHER VOLTAGES MEASURED TO GROUND WITH 1000 OHMS-PER-VOLT VOLTMETER.

H - HEATER
P - PLATE
K - CATHODE
Gs - SCREEN GRID
Gc - CONTROL GRID
Su - SUPPRESSOR

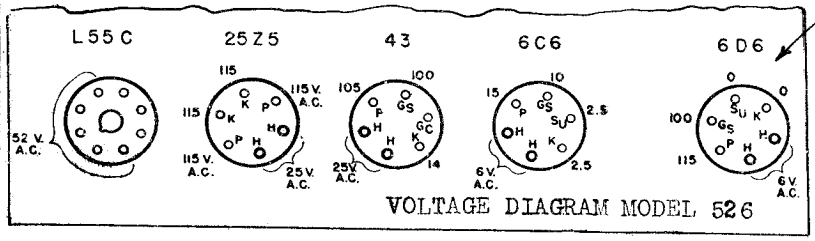

VOLTAGE DIAGRAM MODEL 526

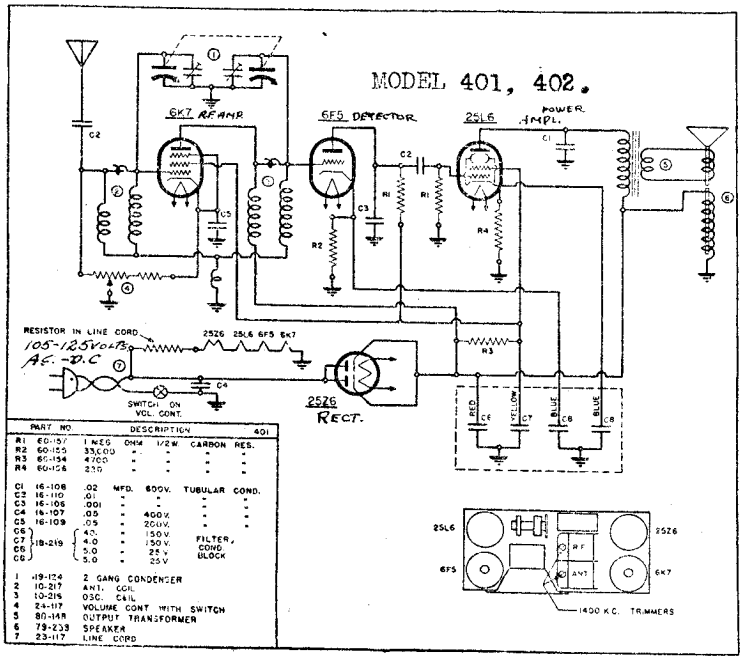

PART NO.			DESCRIPTION	401
R1	60-157	1 MEG	OHM 1/2 W. CARBON	RES.
R2	60-155	33,000	" "	"
R3	60-154	4700	" "	"
R4	60-156	220	" "	"
C1	16-108	.02	MFD. 600V. TUBULAR	COND.
C2	16-110	.01	" "	"
C3	16-105	.001	" "	"
C4	16-107	.05	" 400V.	"
C5	16-109	.05	" 200V.	"
C6	18-219	4.0	" 150V.	FILTER COND. BLOCK
C7	18-219	4.0	" 150V.	FILTER COND. BLOCK
C8	18-219	5.0	" 25V.	FILTER COND. BLOCK
C9	18-219	5.0	" 25V.	FILTER COND. BLOCK
1	19-124	2 GANG CONDENSER		
2	10-217	ANT. COIL		
3	10-216	OSC. COIL		
4	24-117	VOLUME CONT WITH SWITCH		
5	80-148	OUTPUT TRANSFORMER		
6	79-233	SPEAKER		
7	23-117	LINE CORD		

ALIGNMENT PROCEDURE MODEL 526 T.R.F. 2 BAND.

All alignments must be made with the volume control turned full on and with the signal input from the generator reduced to as low a value as possible while still giving a sufficient output to be easily read on the output meter.

Connect the output meter, through a .5 M.F. condenser and a resistance of such a value as to make the total meter resistance approximately 4000 ohms, to the plate and screen terminals of the 43 socket. The output meter remains connected during the entire alignment procedure.

Connect the signal generator to the antenna lead through a .00025 M.F. condenser. Connect the ground of the generator to the receiver chassis through a .1 M.F. condenser. With the wave switch on broadcast position and the dial set to 1400 K.C., feed in a 1400 K.C. signal. Adjust the trimmers on top of the gang condenser until the maximum output is obtained.

Turn the wave switch to short wave position and tune in a 4.5 M.C. signal from the generator. Adjust the 4.5 M.C. antenna trimmer to maximum output.

©John F. Rider, Publisher

MODEL 521
Schematic, Socket

GAMBLE-SKOGMO, INC.

Trimmers, Voltage
Parts

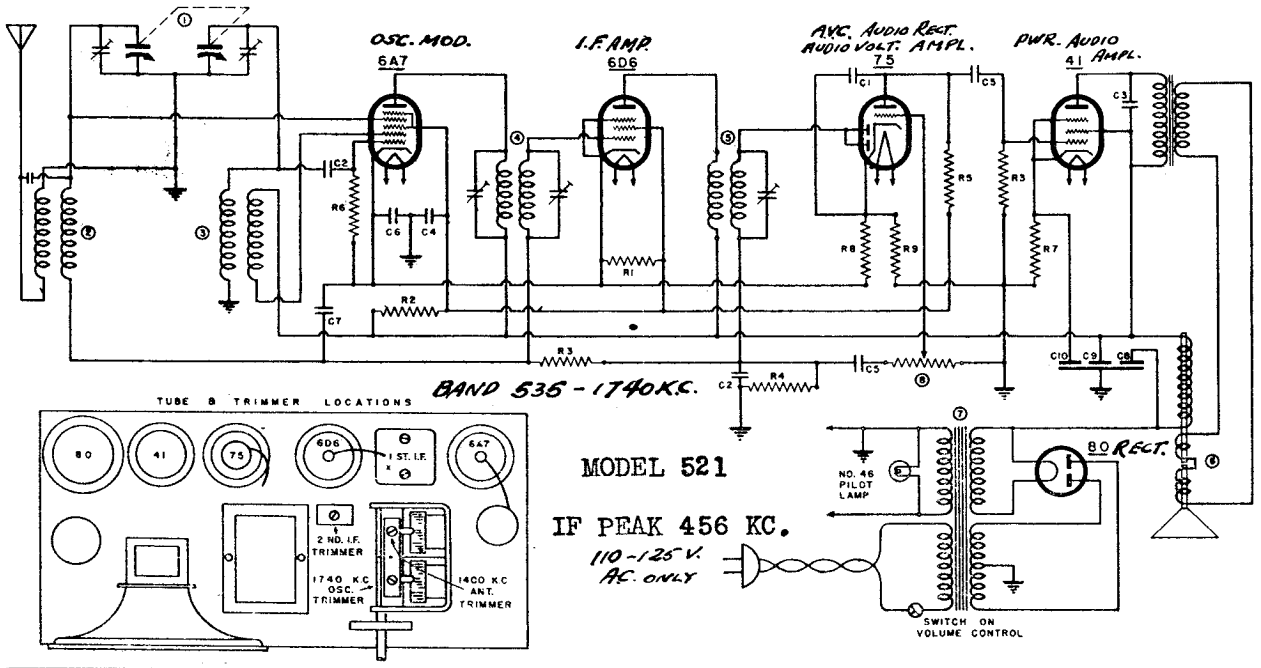

MODEL 521

IF PEAK 456 KC.

110-125 V. AC. ONLY

VOLTAGES MEASURED WITH 1000 OHM PER VOLT VOLTMETER.
ALL VOLTAGES EXCEPT HEATERS MEASURED TO GROUND.

G - - - GRID
G1 - - OSCILLATOR GRID
G2 - - OSCILLATOR PLATE
SG - - SCREEN GRID
SU - - SUPPRESSOR GRID
P - - - PLATE
DP - - DIODE PLATE
K - - - CATHODE
H - - HEATER

(BOTTOM VIEW OF CHASSIS)

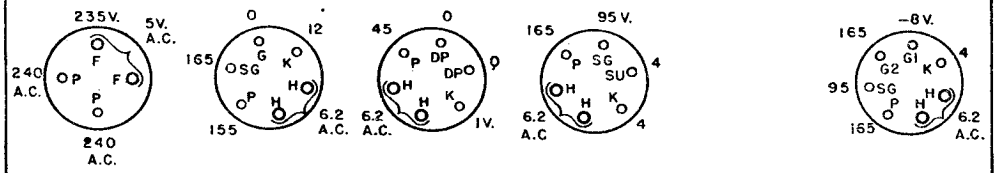

PART NO.	DESCRIPTION
1	19-11 2 GANG VARIABLE CONDENSER
2	10-186 ANTENNA COIL
3	10-167 OSCILLATOR COIL
4	10-162 1 ST. I.F. TRANSFORMER
5	10-163 2 ND. I.F. TRANSFORMER
6	79-214 SPEAKER
7	82-104 POWER TRANSFORMER
8*	24-104 VOLUME CONTROL WITH SWITCH

PART NO.	DESCRIPTION
C1	1504 .00025 MFD. MICA CONDENSER
C2	1501 .0001 " " "
C3	1651 .004 " 600 V. PAPER CONDENSER
C4	1607 .05 " 400 V. " "
C5	1603 .01 " " " " "
C6	1614 .25 " 200 V. " "
C7	1822 .05 " " " " "
C8	8.0 " 250 V. ELECTROLYTIC COMB " "
C9	19-102 4.0 " " " "
C10	5.0 " 25 V. " "

PART NO.	DESCRIPTION
R1	G-7 25,000 OHM 1/2 WATT CARBON RES
R2	6103 10,000 " " " "
R3	6018 500,000 " 1/3 " "
R4	6024 250,000 " " " "
R5	6056 500,000 " " " "
R6	6025 50,000 " " " "
R7	6052 800 " " " "
R8	60-112 175 " " " "
R9	60098 50 " " " "

ALIGNMENT PROCEDURE

All alignments must be made with the volume control turned full on and with the signal input from the generator reduced to as low a value as possible while still giving a sufficient output to be easily read on the output meter.

Connect the output meter, through a .5 M.F. condenser and a resistance of such a value as to make the total meter resistance approximately 7000 ohms, to the 2 small pins of the speaker plug. The output meter remains connected during the entire alignment procedure.

Connect the signal generator to the grid cap of the 6A7 tube through a .1 M.F. condenser. Connect the ground of the generator to the ground lead of the receiver. Set the dial to about 1000 K.C., feed in a 455 K.C. signal. Adjust the trimmers on top of the first and second I.F. transformers until the maximum output is obtained. This aligns the I.F.

Turn the dial to the extreme high frequency end. Feed a 1740 K.C. signal to the receiver antenna lead through a .00025 M.F. mica condenser. Adjust the 1740 K.C. oscillator trimmer until maximum output is shown. Set the generator to 1400 K.C. and tune in this signal on the receiver. Then adjust the 1400 K.C. antenna trimmer to maximum output. This completes the alignment.

©John F. Rider, Publisher

GAMBLE SKOGMO, INC.

MODEL 566
Schematic, Socket
Trimmers, Parts

CONDENSERS

C1	129-3	.00002 Mica—"0"—20%	
C2	129-49	.00009 Mica—"0"—5%	
C3	100-9	.05x200 Volt	
C4	100-8	.25x200 Volt	
C5	129-21	.0002 Mica—"MT"—"0"—20%	
C6	100-1	.1 x400 Volt 50%—10%	
C7	100-33	.1 x200 Volt 50%—10%	
C8	100-9	.05x200 Volt 25%—25%	
C9	100-1-B	.1 x400 Volt 50%—10%	
C10	129-12	.00025 Mica—"MT"—"0"—20%	
C11	100-9	.05 x200 Volt 25%—25%	
C12	129-5	.0001 Mica—"MT"—"0"—20%	
C13	116-15	.05 x400 Volt	
C14	116-15	.007x800 Volt	
C15	100-33	.1x200 Volt 50%—10%	
C16	119-20	8.0 Mfd. Electrolytic Condenser—350 Working Volts	
C17	119-20	4.0 Mfd. Electrolytic Condenser—350 Working Volts	
C18	100-38	.01x1400 Volt—10%	
C19	100-35	.5 x 200 Volt 50%—10%	
C20	100-35	.5 x 200 Volt 50%—10%	
C21	100-33	.1 x 200 Volt 50%—10%	
C22	124-17	Single Padder J-4-S	

NOTE: C-13 and C-14 in one unit—part number 116-15.

RESISTORS

R1	130-20	100M Ohm—½ Watt—20%	50 Volt—Carbon
R2	130-79	400 Ohm—½ Watt—10%	10 Volt—Carbon
R3	130-94	50M Ohm—½ Watt—10%	10 Volt—Carbon—Ins.
R4	130-23	2M Ohm—½ Watt—20%	10 Volt—Carbon
R5	130-42	20M Ohm—½ Watt—20%	100 Volt—Carbon—Ins.
R6	130-68	1 Meg Ohm—½ Watt—10%	20 Volt—Carbon
R7	130-79	400 Ohm—½ Watt—10%	10 Volt—Carbon
R8	101-41	500M Ohm—Volume Control and Switch	
R9	130-106	50M Ohm—½ Watt—10%	100 Volt—Carbon—Ins.
R10	130-101	600 Ohm—½ Watt—10%	10 Volt—Carbon—Ins.
R11	130-68	1 Meg Ohm—½ Watt—10%	20 Volt—Carbon
R12	130-95	12M Ohm—½ Watt—10%	100 Volt—Carbon
R13	130-3	500M Ohm—½ Watt—20%	100 Volt—Carbon
R14	130-5	300M Ohm—½ Watt—20%	10 Volt—Carbon
R15	130-45	250M Ohm—½ Watt—20%	20 Volt—Carbon—Ins.
R16	130-84	200 Ohm—½ Watt—20%	10 Volt—Carbon—Ins.

PARTS

T1	111-48	Antenna Filter Coil Assembly
T2	111-47	Antenna Coil Assembly
T3	108-69	Input I.F. Coil—465 K.C.
T4	102-27	Two Gang Variable Condenser
T5	108-70	Output I.F. Coil—465 K.C.
T6	105-22	Output Transformer
T7	110-37	Oscillator Coil Assembly
T8	104-61	Power Transformer
L1	105-23	Filter Choke
L2	105-19	"A" Filter Assembly
L3	105-25	"A" Filter Assembly
L4	105-24	"A" Choke
L5	114-34	5¼" Speaker (Field resistance 4 ohms)
V		Vibrator

STEERING POST MOUNTING

©John F. Rider, Publisher

MODEL 566
Alignment, Dial Data

GAMBLE SKOGMO, INC.

ALIGNING INSTRUCTIONS:

All of the adjustments have been very carefully set with signal generators at the factory and require no further adjustment, unless it becomes necessary to replace a coil or transformer or if the adjustments have been tampered with in the field. Under no circumstances attempt any adjustments without first making certain that adjustment is necessary and only after voltages, tubes and condensers have been checked and found to be normal. To properly re-align this receiver, a test oscillator, as well as an output meter, must be used.

DUMMY ANTENNAS:

The dummy antennas referred to in the following instructions are:

"I.F. Dummy" —A .1 mfd. condenser connected in series with the test oscillator output lead.

"Broadcast Dummy"—A 175 mmfd. condenser connected in series with the output lead of the test oscillator.

RESONANCE INDICATOR:

Use as a resonance indicator an output meter connected across the primary of the speaker input transformer, or by means of an adapter between the plate and the screen of the type 41 output tube. Maximum deflection of the meter indicates resonance. Use only enough signal to get a readily readable output. A low range output meter or the low scale of a multi-range meter should be used.

I.F. ALIGNMENT

1. With variable condenser in its minimum capacity position (plates entirely out of mesh) and with volume control full on, connect test oscillator set at 465 K.C. in series with I.F. dummy antenna, to grid of 6K7 tube.
2. Adjust trimmer condensers of output I.F. transformer (No. 108-70) to resonance with oscillator.
3. Move test oscillator connection to grid of 6A8 tube and adjust trimmer condensers of input I.F. transformer (No. 108-69) to resonance with oscillator, again going over trimmers of output I.F. transformer (No. 108-70). See top view for location of these transformers. There are two adjustments on each and they are accessible from the top of the transformer shield and should be adjusted with an insulated screw driver.

BROADCAST ALIGNMENT

1. With variable condenser in its minimum capacity position, connect test oscillator set at 1550 K.C. in series with broadcast dummy to the antenna lead of the receiver.
2. Adjust oscillator trimmer of variable condenser to resonance. (This adjustment is rear section of gang—see top view.)
3. Shift test oscillator to 1400 K.C. and pick up signal by rotating condenser and adjust antenna trimmer to resonance—see top view.
4. Re-set test oscillator to 600 K.C. and rotate variable condenser to 600 K.C. Adjust series pad, rocking gang condenser to and fro, at the same time adjusting series pad for maximum gain.

   This adjustment is accessible from the top of chassis—see top view.
5. Go back and check 1400 K.C. If adjustment is made here, check 600 K.C. again.
6. Check for sensitivity at 1000 K.C. by setting test oscillator to this frequency and picking up the signal by rotating variable condenser. UNDER NO CIRCUMSTANCES BEND PLATES OF VARIABLE CONDENSER SECTIONS TO CORRECT TRACKING.

SERVICE NOTES:

Voltages taken from different points of circuit to chassis are measured with volume control full on, all tubes in their sockets and speaker connected, with a volt meter having a resistance of 1000 ohms per volt. These voltages are clearly indicated on the circuit diagram.

In order to prevent signal from acting upon A.V.C. and affecting accuracy of voltage measurements, aerial and ground leads should be short circuited while making measurements.

All voltages are to be measured with 6.3 volts input to receiver. Resistances of coils and transformer windings are indicated in ohms on schematic circuit diagram.

To check for open by-pass condensers, shunt each condenser with another condenser of the same capacity and voltage rating, which is known to be good, until the defective unit is located.

Failure to operate, noisy or weak reception is usually due to defective tubes, the tubes making poor contact with sockets or grid clips making poor contact with the caps of the tubes. Tubes may be checked very easily by replacing with other tubes which are known to be good. If fuse blows out frequently and insulating sleeve has been properly placed over fuse, the trouble is probably in the vibrator, it should be replaced. Do not attempt to make any adjustments on the vibrators.

DIAL ADJUSTMENT:

Tune set to some station of a known frequency (between 800 and 1200 K.C.) hold selector knob, then with a screw driver adjust the slotted screw on the back of the control head, and in that way adjust the dial pointer to the correct frequency setting.

CHECK FOR MOTOR NOISE (Chassis Pickup):

After the above instructions have been followed, with the hood clamped down to prevent radiation and the motor running, the receiver should be turned on and the dial turned off a station, with volume control at maximum. If motor noise is objectionable the next step is to determine whether the interference is originating through chassis pickup or from the antenna.

To check for chassis pickup, disconnect the antenna from the antenna cable and ground the antenna lead to shield of cable. Chassis pickup is due to the electrical interference being radiated or fed back through the frame of the car into the receiver or through the storage battery to the receiver.

It may be necessary when chassis pickup is present to ground the choke and gas throttle rods securely to the firewall at the point which they enter the drivers compartment.

Chassis pickup can be reduced by reducing the gap between contacts and the rotating arm in the distributor head. To do this, apply solder to the end of the rotor arm. Replace the rotor in the distributor and turn the engine over slowly with the crank in order to clean the excess solder. The rotor should not brush or wipe the contacts inside the distributor cap, but should just clear them. As an additional precaution check the breaker points. They should be thoroughly cleaned and adjusted or new points installed if they are badly worn. In stubborn cases a good grade mica .002 to .006 condenser connected across the breaker points will reduce interference. The ignition system of a car must be kept in good condition and leaky cracked high tension wires and bad spark plugs should be replaced In many cars the low tension battery leads, etc., are grouped together with the high tension wires. These leads will very often pick up motor noise and feed it into the receiver through the battery circuit. In cases such as these it will be necessary to separate the low tension from the high tension wires and run them through another hole if they run from the engine compartment up to the instrument panel. This condition, as explained previously, is particularly true on the V-8 Ford as the battery and primary leads run through a special tube which also houses the high tension leads. Shield and ground these leads.

NOTE—Where ignition coils are mounted in motor compartments a .5 mfd cond (148-1 or 148-3) connected between primary coil terminal and receiver mounting bolt will often reduce motor noise.

Accessories such as lighters, electric motor heaters, horns, light switches, automatic relays, electrical gauges such as oil, water and gas are often a source of interference. In these cases the procedure is to try a condenser from ground to various accessories until the interference is eliminated, then install the condensers in those places permanently. Spark intensifiers should not be used.

NO SPARK PLUG SUPPRESSORS ARE REQUIRED

MODEL 566

FIVE TUBE-SUPERHETERODYNE AUTO RADIO RECEIVER

©John F. Rider, Publisher

GAMBLE SKOGMO, INC.

MODEL 600
Schematic, Voltage
Alignment, Parts
Trimmers

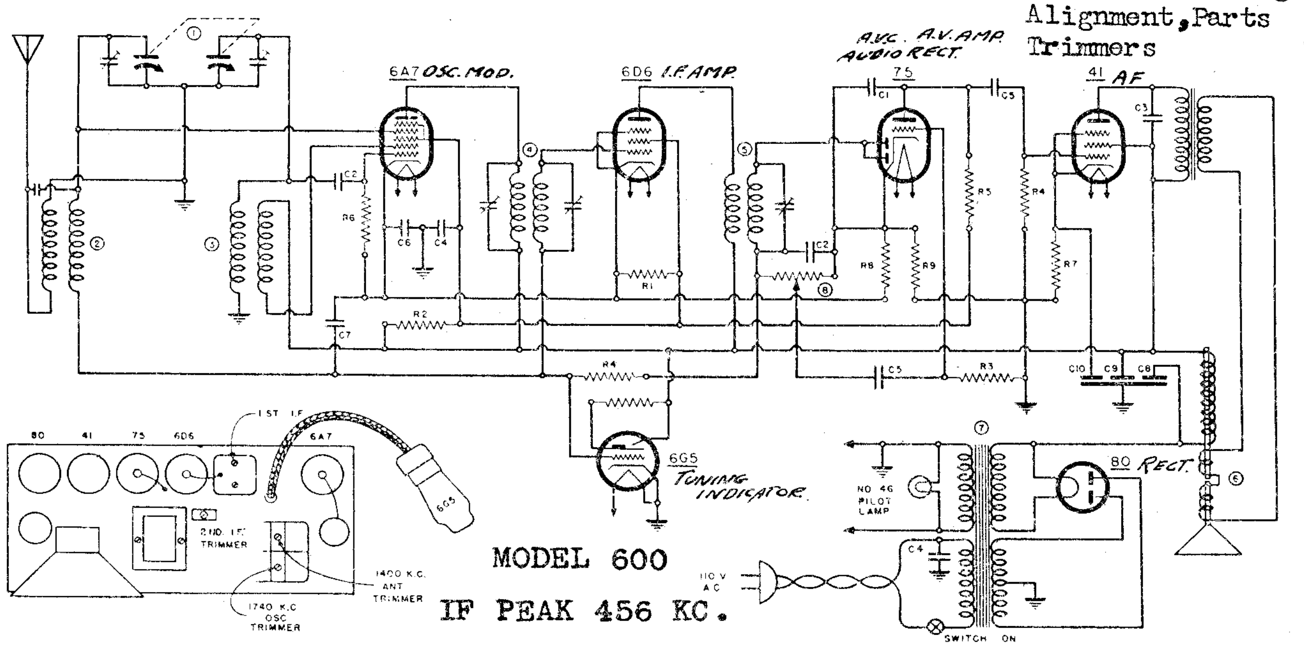

PART NO.		DESCRIPTION
R1	6117	25,000 OHM 1/2 WATT CARBON RES
R2	5105	10,000 " " " " "
R3	6017	1 MEG. " 1/3 " " "
R4	5018	500,000 " " " " "
R5	6056	200,000 " " " " "
R6	6025	50,000 " " " " "
R7	6052	800 " " " " "
R8	60-122	175 " " " " " 10%
R9	60098	50 " " " " " 10%

PART NO.		DESCRIPTION
C1	1504	.00025 MFD. MICA CONDENSER *
C2	1501	.0001 " " "
C3	1651	.004 " 600 V. PAPER CONDENSER
C4	1607	.05 " 400 V. " "
C5	1603	.01 " " " "
C6	1614	.25 " 200 V. " "
C7	1622	.05 " " " "
C8		8.0 " 250V. ELECTROLYTIC COND.
C9	18-102	4.0 " " " "
C10		5.0 " 25V. " "

PART NO.		DESCRIPTION 629
1	19-111	2 GANG VARIABLE CONDENSER
2	10-166	ANTENNA COIL
3	10-167	OSCILLATOR COIL
4	10-162	1ST. I.F. TRANSFORMER
5	10-163	2ND. I.F. TRANSFORMER
6	79-239	SPEAKER
7	80-104	POWER TRANSFORMER
8	24-104	VOLUME CONTROL WITH SWITCH

ALIGNMENT PROCEDURE

All alignments must be made with the volume control turned full on and with the signal input from the generator reduced to as low a value as possible while still giving a sufficient output to be easily read on the output meter.

Connect the output meter, through a .5 M.F. condenser and a resistance of such a value as to make the total meter resistance approximately 7000 ohms, to plate and screen pins of output tube, or a low voltage A.C. meter may be used connected across speaker voice coil. The output meter remains connected during the entire alignment procedure.

Connect the signal generator to the grid cap of the 6A7 tube through a .1 M.F. condenser. Connect the ground of the generator to the ground lead of the receiver. Set the dial to about 1000 K.C., feed in a 456 K.C. signal. Adjust first and second I.F. trimmers for maximum output. Refer to chassis lay-out for location of trimmers.

Turn the dial to the extreme high frequency end. Feed a 1740 K.C. signal to the receiver antenna lead through a .00025 M.F. mica condenser. Adjust the 1740 K.C. oscillator trimmer until maximum output is shown. Set the generator to 1400 K.C. and tune in this signal on the receiver. Then adjust the 1400 K.C. antenna trimmer to maximum output. This completes the alignment.

VOLTAGES MEASURED WITH 1000 OHM PER VOLT VOLTMETER.
ALL VOLTAGES EXCEPT HEATERS MEASURED TO GROUND.

G --- GRID
G1 -- OSCILLATOR GRID
G2 -- OSCILLATOR PLATE
SG -- SCREEN GRID
SU -- SUPPRESSOR GRID
P --- PLATE
DP -- DIODE PLATE
K -- CATHODE
H HEATER

(BOTTOM VIEW OF CHASSIS)

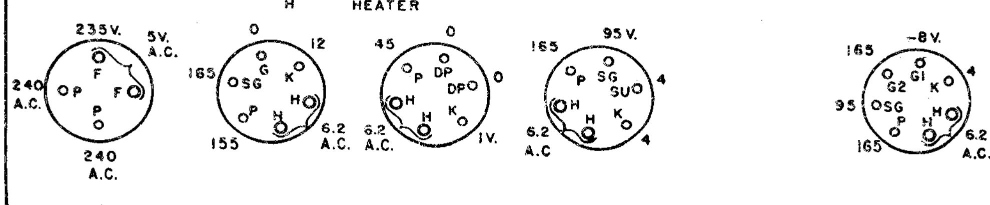

©John F. Rider, Publisher

MODEL 623
Schematic, Socket
Trimmers, Voltage
Alignment, Parts

GAMBLE SKOGMO, INC.

A.C. SUPERHETERODYNE - TWO BAND, 1730-535 KC, 6.4-2.1 MC.
6 TUBE

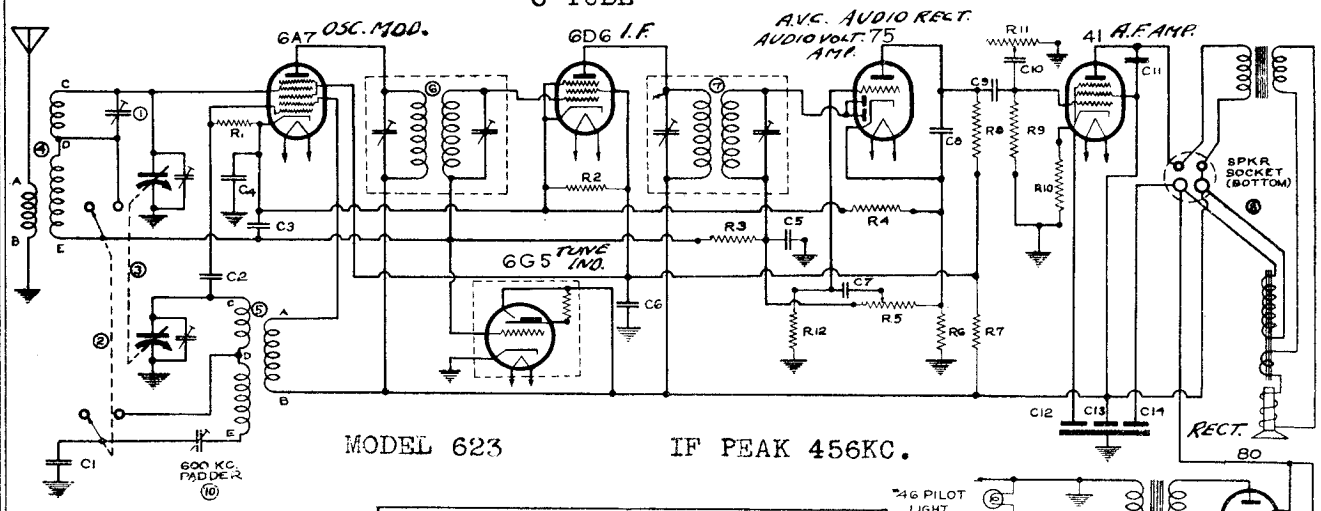

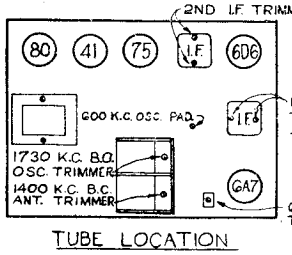

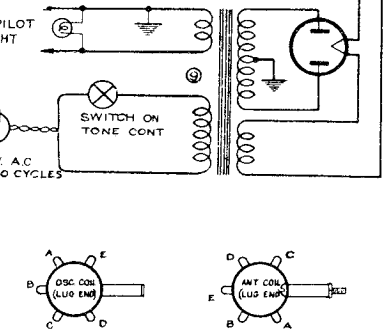

CIRCUIT DATA

PART NO.	DESCRIPTION	PART NO	DESCRIPTION
C1 15-1010	.00148 MFD.	R1 6028	40,000 OHMS 1/3 W
C2 1501	.0001	R2 6117	25,000 OHMS 1/2 W
C3 1622	.05 200v.	R3 6018	500,000 1/3 W
C4 1614	.25 "	R4 6011	100 "
C5 1504	.00025 "	R5 24-105	500,000 VOL. CONT
C6 1607	.05 400v.	R6 6009	50 1/3 W
C7 1508	.01 "	R7 6105	10,000 1/2 W
C8 1504	.00025 "	R8 6056	200,000 1/2 W
C9 1503	.01 "	R9 6013	500,000 "
C10 1651	.004 600 v	R10 6052	800 "
C11 1651	.004 600 v.	R12 6017	1.0 MEG "
C12	4 MFD. 25v. YELLOW	5 10-147	OSC. COIL
C13 18-102	4 " 250v. GREEN	6 10-175	FIRST I.F. COIL
C14	8 " 250v. RED	7 10-176	SECOND I.F. "
1 2054	S.W. ANT. TRIMMER	8	SPEAKER
2 69-109	WAVE BAND S.W.	9 80-104	POWER TRANSFORMER
3 19-113	GANG CONDENSER	10 20-100	PADDER
4 19-123	ANT. COIL	R11 26-106	TONE CONTROL

ALIGNMENT PROCEDURE

Connect the output meter, through a .5 M.F. condenser and a resistance of such a value as to make the total meter resistance approximately 7000 ohms, to the 2 small pins of the speaker plug. The output meter remains connected during the entire alignment procedure.

Connect the signal generator to the grid cap of the 6A7 tube through a .1 M.F. condenser. Connect the ground of the generator to the ground lead of the receiver. With the wave switch on broadcast position and the dial set to about 1000 K.C., feed in a 456 K.C. signal. Adjust the trimmers on top of the first and second I.F. transformers until the maximum output is obtained. This aligns the I.F.

Leaving the wave switch on broadcast position turn the dial to the extreme high frequency end. Feed a 1730 K.C. signal to the receiver antenna lead through a .00025 M.F. mica condenser. Adjust the 1730 K.C. broadcast oscillator trimmer until maximum output is shown. Set the generator to 1400 K.C. and tune in this signal on the receiver. Then adjust the 1400 K.C. broadcast antenna trimmer to maximum output. Set the generator to 600 K.C. and adjust the 600 K.C. broadcast oscillator pad to maximum output **while tuning the receiver back and forth across the signal** from the generator. This completes the alignment of the broadcast band.

The short wave band is aligned while feeding a 6.0 M.C. signal to the receiver antenna lead through a .00025 M.F. mica condenser. Turn the wave switch to short wave position and tune in the 6.0 M.C. signal. Adjust the 6.0 M.C. short wave trimmer to maximum output.

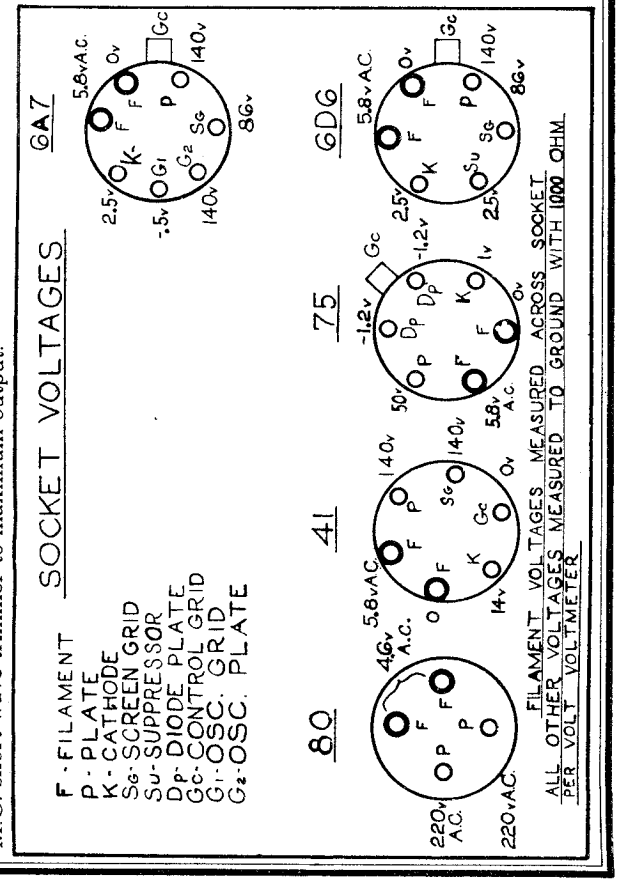

©John F. Rider, Publisher

GAMBLE-SKOGMO, INC.

MODEL 645
Schematic, Socket
Trimmers, Voltage
Alignment, Parts

MODEL 645
I.F. PEAK 456 KC.

BANDS:- 1730 K.C. - 535 K.C.
6.4 M.C. - 2.1 M.C.

PART NO	DESCRIPTION
R1 6117	25,000 OHM 1/2 W CARBON RES.
R2 6105	10,000 " " " "
R3 6017	1 MEG. " 1/3 W " "
R4 6018	500,000 " " " "
R5 6036	200,000 " " " "
R6 6028	40,000 " " " "
R7 6052	800 " " " "
R8 60-151	160 " " " " ±10%
R9 60-150	51 " " " " ±10%

PART NO	DESCRIPTION
C1 15-101 00148	MFD. MICA CONDENSER ±5%
C2 1504 00025	" " " "
C3 1501 0001	" " " "
C4 1651 004	600 V. TUBULAR COND.
C5 1607 05	400 V. " "
C6 1603 01	" " " "
C7 1614 25	200 V. " "
C8 1622 05	" " " "
C9 18-102 8	250 V. WET ELECTROLYTIC
C10 " 4	" " "
C11 " 4	25 V. " "

PART NO.	DESCRIPTION 645
1 19-113	2 GANG CONDENSER
2 10-196	ANTENNA COIL
3 10-147	OSCILLATOR COIL
4 69-108	WAVE SWITCH
5 69-115	6 BUTTON PUSH-BUTTON SWITCH
6 20-106	ANT. TRIMMER STRIP
7 20-107	OSC. " "
8 20-100	B.C. OSC. PADDING TRIMMER
9 10-194	1ST. I.F. TRANSFORMER
10 10-195	2 ND. I.F. "
11 24-105	VOLUME CONTROL
12 26-106	TONE CONTROL WITH SWITCH
13 80-104	POWER TRANSFORMER
14	SPEAKER

ALIGNMENT PROCEDURE

All alignments must be made with the volume control turned full on and with the signal input from the generator reduced to as low a value as possible while still giving a sufficient output to be easily read on the output meter.

Connect the output meter, through a .5 M.F. condenser and a resistance of such a value as to make the total meter resistance approximately 7000 ohms, to the 2 small pins of the speaker plug. The output meter remains connected during the entire alignment procedure.

Connect the signal generator to the grid cap of the 6A7 tube through a .1 M.F. condenser. Connect the ground of the generator to the ground lead of the receiver. With the wave switch on broadcast position and the dial set to about 1000 K.C., feed in a 456 K.C. signal. Adjust the trimmers on top of the first and second I.F. transformers until the maximum output is obtained. This aligns the I.F.

Leaving the wave switch on broadcast position turn the dial to the extreme high frequency end. Feed a 1730 K.C. signal to the receiver antenna lead through a .00025 M.F. mica condenser. Adjust the 1730 K.C. broadcast oscillator trimmer until maximum output is shown. Set the generator to 1400 K.C. and tune in this signal on the receiver. Then adjust the 1400 K.C. broadcast antenna trimmer to maximum output. Set the generator to 600 K.C. and adjust the 600 K.C. broadcast oscillator pad to maximum output **while tuning the receiver back and forth across the signal** from the generator. This completes the alignment of the broadcast band.

The short wave band is aligned while feeding a 6.0 M.C. signal to the receiver antenna lead through a .00025 M.F. mica condenser. Turn the wave switch to short wave position and tune in the 6.0 M.C. signal. Adjust the 6.0 M.C. short wave trimmer to maximum output.

©John F. Rider, Publisher

MODEL 648 Schematic, Socket Trimmers, Voltage Tuner Parts

GAMBLE SKOGMO, INC.

RANGE 1740 KC - 540 KC.

CODE	PART NO	DESCRIPTION
R1	60-185	22M OHM 1/3 WATT RESISTOR
R2	60-178	470M " " "
R3	60-186	33M " " "
R4	60-180	220M " " "
R5	60-179	2.2 MEGOHM 1/3 WATT RESISTOR
R6	60-177	47M OHM 1/3 WATT RESISTOR
R7	60-157	45 " 1/2 " ±10%
R8	60-191	30 " " ±10%
R9	24-125	1 MEGOHM VOLUME CONTROL & SW.
R10	24-117	500H OHM TONE CONTROL
C1	1501	100 MMF MICA CONDENSER
C2	15-116	.1 MFD 400V TUBULAR CONDENSER
C3	1604	.01M MFD 600V " "
C4	1622	.05 " 200V " "
C5	1651	.004 MFD 500V " "
C6	16-108	.025 " " "
C7	1607	.05 " 400V " "
C8	15-123	.02 " 200V " "
C9	18-226	10 X 10 MFD 400 W.V. ELECTROLYTIC CONDENSER
C10	18-131	2 GANG VARIABLE CONDENSER
T1	10-235	ANTENNA COIL
T2	10-236	OSCILLATOR COIL
T3	83-159	POWER TRANSFORMER
T4	10-227	1ST I.F. "
T5	10-228	2ND I.F. "
1		SPEAKER

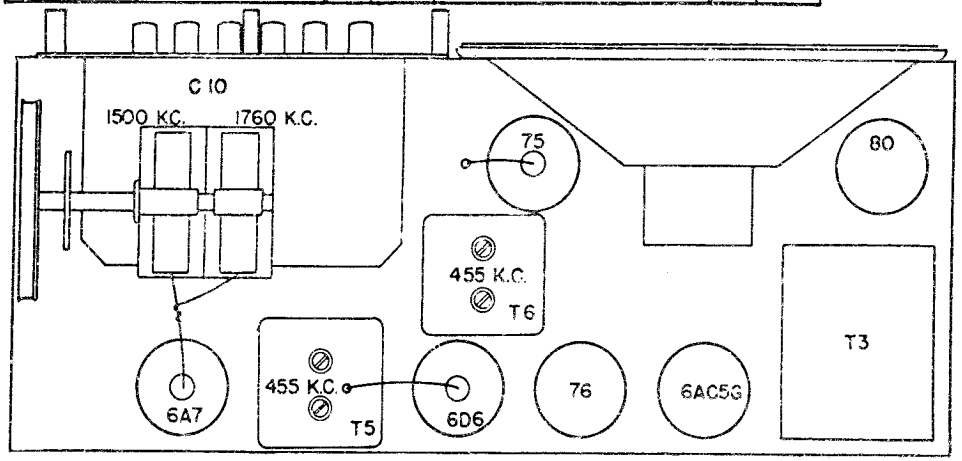

MODEL 648

IF PEAK 455 KC.

THIS MODEL HAS 6 AUTOMATIC PUSH BUTTONS

Follow the procedure outlined below, in order to adjust the push-buttons properly:

1. By means of the Station Selector Knob tune in WITH THE RIGHT HAND AS ACCURATELY AS POSSIBLE the station having the lowest frequency—that is, your selected station which is tuned in nearest the right-hand side of the dial.

2. After the station has been tuned in accurately with the right hand, continue to hold it in its exact position firmly, and with the left hand loosen the Push-Button to be set up for that station by unscrewing the Push-Button about one turn to the left (counter-clockwise).

3. Continuing to hold the Station Selector Knob in its exact position, PUSH THE PUSH-BUTTON IN ALL THE WAY with the left hand.

4. After the Push-Button has been depressed all the way, tighten it gently toward the right (clockwise). Release Push-Button slowly and when in normal position grip button and tighten firmly.

The Push-Button tuning system is now correctly set up for your first selected station of lowest frequency and the Call Letter Tab for this station should be at the extreme right of the Call Letter Holder.

Follow through with this same procedure, setting up the other 5 stations in the order of their frequency—that is, the second station set up will be second lowest in frequency and the third station set up will be third lowest in frequency.

Carefully check each Push-Button for the accuracy of the setting.

©John F. Rider, Publisher

GAMBLE SKOGMO, INC.

MODEL 648
Alignment
MODEL 735
Tuner, Voltage

MODEL 735 **CONTROLS**

This receiver has 4 controls, the left hand upper knob being the volume control, the left hand lower knob the tone control and "on-off" switch, the upper right hand knob the tuning control and the lower right hand knob the wave switch.

The wave switch has three positions. When turned to the left it is in position for the reception of standard broadcast stations. The other two positions are for the reception of short waves: police calls, amateurs, aircraft, etc.

The tuning knob selects the station desired and may be turned in either direction to its limit of rotation as shown by the dial.

In addition to these four controls there is also a row of six buttons located just below the dial. The use and the adjustment of these buttons is described in the "Operation" and "Instamatic Tuning" sections.

INSTAMATIC TUNING

The purpose of **Instamatic** tuning is to give the user instant, automatic tuning of any one of a selection of favorite broadcast stations. The control buttons are conveniently located just below the tuning dial. Pushing in any button will release any other button which happens to be already in. After the **Instamatic** tuning feature has been properly adjusted, this will instantly and automatically tune in the station selected by this button.

Before attempting to adjust or use **Instamatic** tuning, the "Installation" and "Operation" instructions must be carefully followed. When the receiver is operating satisfactorily using the tuning dial with the "Dial Tuning" button pressed in, the **Instamatic** feature may be easily adjusted by carefully following these instructions.

Located on the back of the chassis is a row of five pair of small bakelite adjustment knobs. Each pair of these knobs controls the tuning of the station for the **Instamatic** button which is in the same relative position.

With the receiver operating with the "Dial Tuning" button in and the wave switch on broadcast position, turn the tuning knob to the left until the 540 KC end of the band has been reached. Then turn the tuning knob to the right until a station, for which it it desired to have **Instamatic** tuning, is heard. Press in the Button No. 1. This is the button at the left hand end of the row. Reach around to the back of the receiver and turn upper knob of the Pair No. 1 until the same program is heard. Unless the wrong knob is being turned, several different stations will be heard during this procedure. If necessary to check that the same program is now tuned in, the "Dial Tuning" button may again be pressed. In this way it can be determined that the same station is tuned in with the **Instamatic** button as when the "Dial Tuning" button is in. If it is not the same station the adjustment knob should be turned again and these operations repeated until the same program is heard when either of these two buttons is pressed.

The bottom adjustment knob of the first pair is now turned until the station is heard the best. Both top and bottom knobs may then be adjusted to exact tuning by watching the magic eye and adjusting until the two edges of the green section are as close together as it is possible to get them.

The first **Instamatic** button is now properly adjusted for the station which was tuned in on the dial and the station's call letters may be pushed out of the station list, moistened on the back, and pressed into the hollow end of the button.

With the "Dial Tuning" button pressed in, the tuning knob is again turned to the right until the next station for which **Instamatic** tuning is wanted, is tuned in. The adjustment process for this station is the same as before, except that Button No. 2 and Pair No. 2 adjustment knobs are used. Proceeding in this way all five of the buttons may be properly adjusted for the stations desired.

It must be remembered that the "Dial Tuning" button must be pressed in whenever it is desired to tune in stations with the tuning knob, regardless of which wave band is in use. It must also be remembered that the wave switch must be in the broadcast position when **Instamatic** tuning is being used.

If desired the tuning dial may be left set to a station which is not set up on one of the buttons. The "Dial Tuning" button will then tune in this station when it is pressed. This will give an extra **Instamatic** tuned station, making a total of six different stations which can be instantly tuned in by simply pressing a button.

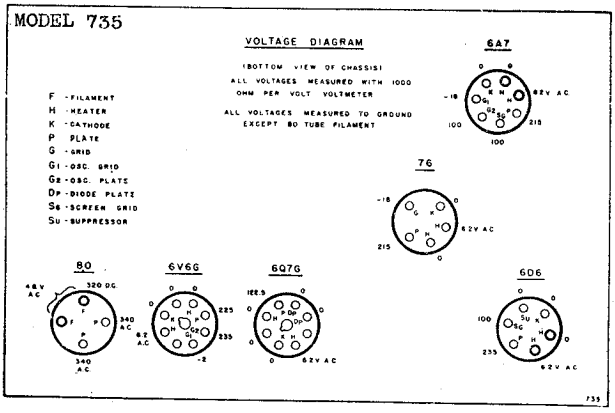

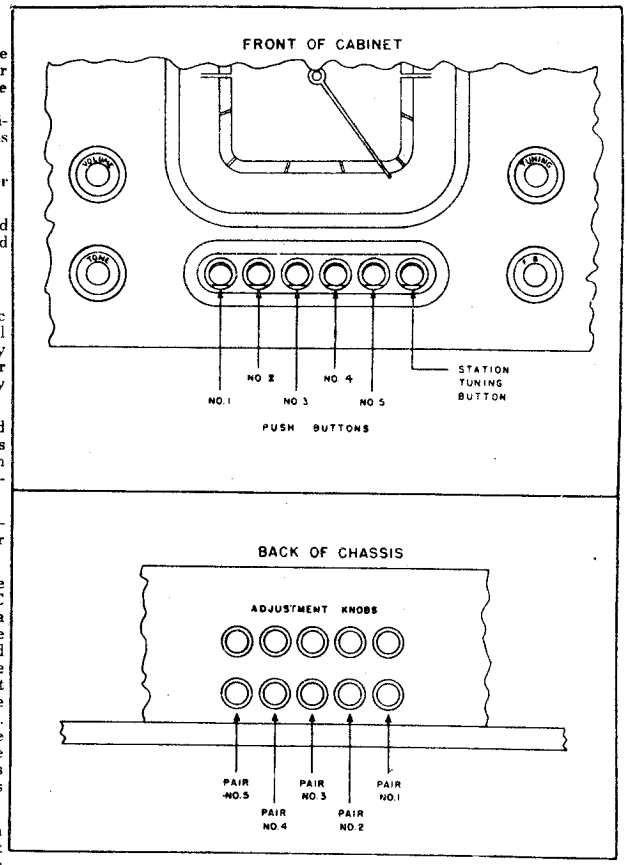

The approximate frequency coverage of each of the **"Instamatic"** control buttons is as follows:

1—Stations between 540 and 1000 KC.
2 Stations between 540 and 1000 KC.
3—Stations between 750 and 1200 KC.
4—Stations between 750 and 1200 KC.
5—Stations between 1000 and 1500 KC.

MODEL 648 **ALIGNMENT PROCEDURE**

The following alignment procedure is for use only by competent service men having the proper equipment. Re-alignment is very seldom needed and is usually only required after some major part has been replaced because of damage to the receiver.

The equipment required for re-aligning this receiver is an output meter and a modulated source of radio frequency (a signal generator or microvolter). This source of radio frequency must be accurately calibrated in frequency and must have a method of varying the output.

All alignments must be made with the volume control turned full on and with the signal input from the generator reduced to as low a value as possible while still giving a sufficient output to be easily read on the output meter.

Connect the output meter, through a .5 M.F. condenser and a resistance of such a value as to make the total meter resistance approximately 7000 ohms, to plate of output tube and B+, or a low voltage A. C. meter may be used connected across speaker voice coil. The output meter remains connected during the entire alignment procedure.

Connect the signal generator to the grid cap of the 6A7 tube through a .1 M.F. condenser. Connect the ground of the generator to the ground lead of the receiver. Set the dial to about 1000 K.C., feed in a 455 K.C. signal. Adjust first and second I.F. trimmers for maximum output. Refer to chassis lay-out for location of trimmers.

Turn the dial to the extreme high frequency end. Feed a 1760 K.C. signal to the receiver antenna lead through a .00025 M.F. mica condenser. Adjust the 1760 K.C. oscillator trimmer until maximum output is shown. Set the generator to 1500 K.C. and tune in this signal on the receiver. Then adjust the 1500 K.C. antenna trimmer to the maximum output. This completes the alignment.

©John F. Rider, Publisher

MODEL 735 — GAMBLE SKOGMO, INC. — Schematic, Parts Alignment

PART NO.		DESCRIPTION
R1	6211	15,000 OHM 1W CARBON RES
R2	6115	1000 " 1/2W "
R3	6020	2 MEG. " 1/3W "
R4	6017	1 " " "
R5	6018	500,000 " " "
R6	6024	250,000 " " "
R7	6026	100,000 " " "
R8	6025	30,000 " " "
R9	60-140	130 " 1W WIRE WOUND RES
R10	60-141	25 " 1/2W " "

C1	15-106	.0011	MFD. MICA CONDENSER 2.5%
C2	1504	.00025	" " " "
C3	1501	.0001	" " " "
C4	1503	.00005	" " " "
C5	1602	.1	600V. TUBULAR COND.
C6	1648	.03	" " "
C7	1611	.006	" " "
C8	1609	.002	" " "
C9	1616	.25	400V. " "
C10	1601	.1	" " "
C11	1605	.02	" " "
C12	1600	.1	200V. " "
C13	1622	.05	600V. TUBULAR COND.
C14	18-202	10	400V. WET ELECTROLYTIC
C15	18-201	12	300V. "

1	19-121	3 GANG CONDENSER
2	69-107	WAVE SWITCH
3	10-184	S.W. ANT. COIL
4	10-183	S.W. OSC. COIL
5	10-182	POL. ANT. COIL
6	10-181	POL. OSC. COIL
7	10-179	B.C. ANT. & PRESELECTOR COIL
8	10-180	B.C. OSC. COIL
9	10-201	1ST. I.F. TRANSFORMER
10	10-202	2ND. I.F. "
11	20-106	ANT. TRIMMER STRIP
12	20-107	OSC. " "
13	69-115	PUSH BUTTON SWITCH
14	24-105	VOLUME CONTROL
15	26-106	TONE CONTROL WITH SWITCH
16	80-106	POWER TRANSFORMER
17	20-100	B.C. OSC. PADDING CONDENSER
18		SPEAKER

ALIGNMENT PROCEDURE

The equipment required for re-aligning this receiver is an output meter and a modulated source of radio frequency (a signal generator or microvolter). This source of radio frequency must be accurately calibrated in frequency and must have a method of varying the output.

All alignments must be made with the volume control turned full on and with the signal input from the generator reduced to as low a value as possible while still giving a sufficient output to be easily read on the output meter.

Connect the output meter, through a .5 M.F. condenser and a resistance of such a value as to make the total meter resistance approximately 6000 ohms, to the two small pins of the speaker plug. The output meter remains connected during the entire alignment procedure.

Connect the signal generator to the grid cap of the 6A7 tube through a .1 M.F. condenser. Connect the ground of the generator to the ground post of the receiver. With the wave switch on broadcast position and the dial set to about 1000 K.C., feed in a 456 K.C. signal. Adjust the trimmers on top of the first and second I.F. transformers until the maximum output is obtained. This aligns the I.F.

Leaving the signal generator connected to the grid cap of the 6A7, turn the wave switch to the right hand (short wave) position. Set the dial and the signal generator to 15.0 M.C. Tune in the signal by adjusting the 15.0 M.C. oscillator trimmer. The signal will be heard at two different settings of the trimmer. The proper setting is the one where the signal is heard when the trimmer is the loosest. Also when the dial of the receiver is turned the signal will be heard again at about 14.0 M.C. If the signal is heard at about 16.0 M.C. on the dial instead of 14.0 M.C. the wrong setting has been used and should be corrected.

Set the wave switch on broadcast position, turn the dial to the extreme high frequency end. Feed a 1680 K. C. signal to the receiver antenna post through a .00025 M.F. mica condenser. Adjust the 1680 K.C. broadcast oscillator trimmer for maximum output. Set the generator to 1500 K.C. and tune in this signal on the receiver. Then adjust the 1500 K.C. broadcast antenna trimmer and the 1500 K.C. broadcast preselector trimmer for maximum output. Set the generator to 600 K.C. and adjust the 600 K.C. broadcast oscillator pad to maximum output **while tuning the receiver back and forth across the signal** from the generator. This completes the alignment of the broadcast band.

The police band is aligned by feeding a 4.0 M.C. signal to the receiver antenna lead through the .00025 condenser. Turn the wave switch to the center position and tune the receiver to this signal. Adjust the 4.0 M.C. police antenna trimmer for best output.

The short wave band is aligned in the same way using a 15 M.C. signal and adjusting the 15 M.C. short wave antenna trimmer after having turned the wave switch to the right hand position.

©John F. Rider, Publisher

CONTINUITY TESTS

Continuity or resistance tests on various receiver circuits provide a rapid and simple method of locating practically all defects with the possible exception of open condensers. A direct reading ohmmeter, either as a separate instrument, or as incorporated in the usual set analyzer is necessary in making such tests. It should have a sufficiently wide range to allow for accurately reading such low resistances as R. F. or I. F. Coils as well as being capable of indicating the resistance of the highest resistance circuit which may be encountered in the receiver.

The continuity chart given in this manual shows the correct circuit resistance for all receiver circuits as well as some of the more common incorrect readings, which may be obtained due to various defects. In each case the cause for each incorrect reading is listed in the continuity chart. The resistance values given in the chart are the nominal ratings for each circuit, but it must be taken into consideration that manufacturing tolerance allows a variation in resistance of as high as twenty percent in certain circuits. Accordingly, if a reading slightly at variance with the chart value is obtained in some circuits do not immediately assume that the defect has been located but make such further tests as may be necessary to isolate the cause of the trouble. In the case of some items in the chassis a defective condition will affect several different circuits, as shown in the continuity chart. If a defect of one of these items is indicated by a continuity test of one circuit it can easily be checked by testing the other circuits which would be affected by the same defect.

ALIGNMENT

In order to properly align the R. F. and I. F. circuits of the No. 511 and 515 Chassis, a signal generator will be necessary. This generator must produce I. F. signals at 427 K. C. and 455 K. C. as well as signals throughout the broadcast band of 540 to 1500 K. C. An output meter is essential for determining when the circuits are aligned accurately.

The need for realignment will usually be evidenced by low sensitivity accompanied by poor selectivity. Realignment should, however, not be attempted until all other causes for this same condition, such as defective tubes, weak batteries or inefficient antenna installation have been checked and eliminated as a possible cause of the trouble.

All aligning adjustments are accessible from the top of the chassis making it unnecessary to remove it from the cabinet during alignment.

Aligning Intermediate Condensers—During alignment of the intermediate condensers the oscillator tube should be removed from its socket and the filament voltage control turned in a counter clockwise direction until the filament voltage applied to the remaining four tubes is exactly 2 volts. Place the signal generator in operation at the proper intermediate frequency as determined by the serial number of the chassis. If the plate coil of the 34 tube has been replaced, align the I. F. at 455 K. C. regardless of serial number. Connect the signal lead to the control grid contact of the 32 first detector tube. The ground lead from the signal generator is connected to the chassis of the receiver.

The intermediate condenser adjusting screws are two in number and are located on the top of the oscillator-I.F. assembly. Adjust these two intermediate condenser screws until maximum output is indicated upon the output meter. The adjustment of each screw should be checked at least twice to determine that the proper setting has been made.

Aligning R. F. and Oscillator Condensers—Replace the oscillator tube in its socket and advance the filament voltage control to give a filament voltage of 2 volts. Place the signal generator in operation at 1400 K. C. and connect the signal lead to the antenna lead from the chassis. Turn the tuning condenser rotor until the dial is set at exactly 1400 K. C. Then adjust the trimmer condensers which are located at the sides of the tuning condenser and mounted upon it. There are two such trimmer condensers on the oscillator section of the tuning condenser and one on the R. F. section. Adjust all three trimmers to give maximum output as indicated upon the output meter, adjusting first the two trimmers controlling the oscillator circuit. The oscillator tuning condenser is nearest the rear of the chassis.

Set the signal generator for a frequency of 600 K. C. and tune in this signal on the receiver. Then adjust the 600 K. C. trimmer condenser to give maximum deflection on the output meter. This condenser is located beneath the chassis with the adjusting screw accessible through a hole in the chassis immediately to the left of the tuning condenser as viewed from the rear. During adjustment of this condenser, it will be necessary to "Rock" the tuning condenser while varying the trimmer condenser. That is, the tuning condenser should be tuned back and forth through the resonant point, noting the deflection on the output meter for each setting of the trimmer condenser. The proper setting is that which gives greatest deflection on the output meter when the receiver is tuned through resonance.

Then set the signal generator for a signal of 1,000, 750 and 600 K. C. and check the R. F. and oscillator condensers for resonance. Bend the slotted rotor plate sections of each condenser which are last in mesh in or out until maximum output is obtained at each of these settings. Do not readjust the oscillator 600 K. C. trimmer after it has been set as described above.

Next, set the signal generator for signals of 1400 K. C. and again check the setting of the trimmer condensers on the tuning condenser.

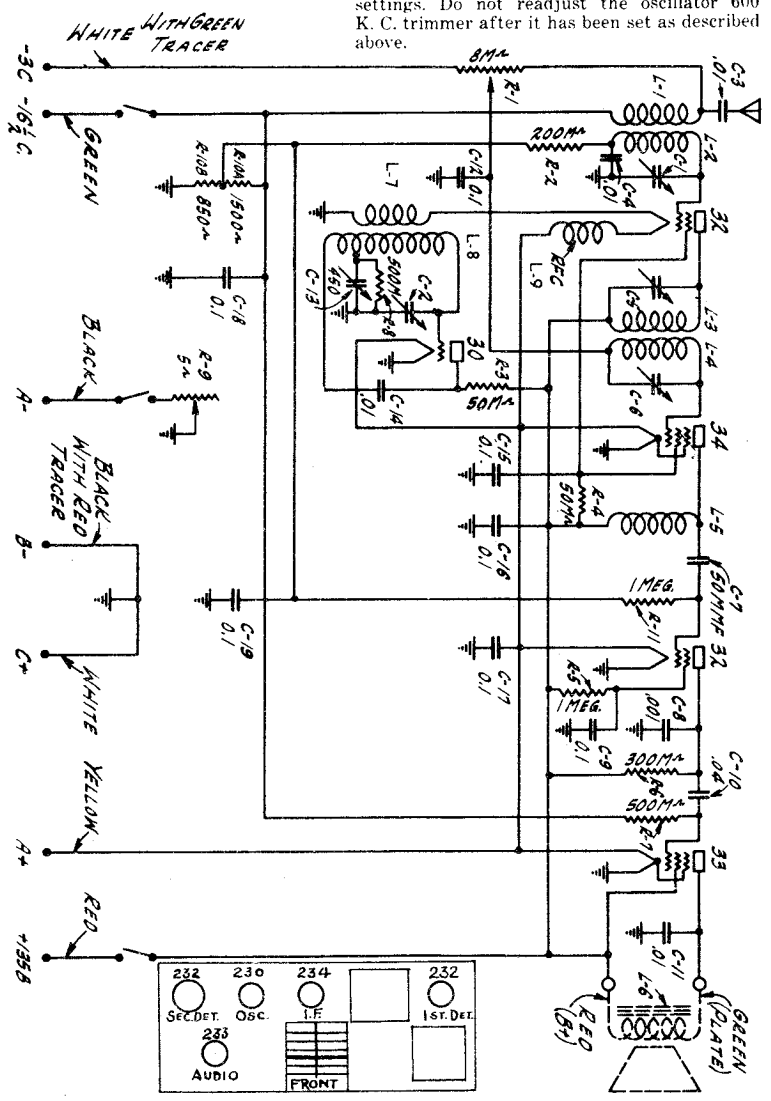

©John F. Rider, Publisher

©John F. Rider, Publisher

CONTINUITY TEST CHART

Remove all tubes—Disconnect Batteries—turn switch to "On" Position—Turn Filament Voltage Control to minimum and Volume Control to Maximum—Test Continuity from each reference point to each measurement point listed below it.

REFERENCE POINT—CHASSIS

Measurement Point	Correct Reading (Ohms)	Incorrect Reading (Ohms)	Defect
1st Detector Control Grid	200,855.5	0 5.5 Open	Shorted C-1 or Trimmer Shorted C-4 Open R-10B, R-2 or L-2
1st Detector Screen	Open	0 50,000 1,050,904	Shorted C-15 Shorted C-16 Shorted C-7
1st Detector Plate	Open	28 50,028	Shorted C-16 Shorted C-15
1st Det., -Fil.	.5	Open	Open L-7
Oscillator Control Grid	500,000	3 0 Open	Shorted C-13 Shorted C-2 or Trimmer Open L-8 or R-8
Oscillator Plate	Open	50,000 100,000	Shorted C-16 Shorted C-15
I. F. Control Grid	10,406	28	Shorted C-12
I. F. Screen	Same	as 1st Det.	
I. F. Plate	Open	34 50,034 1,000,850	Shorted C-16 Shorted C-15 Shorted C-7
2nd Detector Control Grid	1,000,850	Open 1,000,000	Open R-10B or R-11 Shorted C-19
2nd Detector Screen	Open	0	Shorted C-9
2nd Detector Plate	Open	0 300,000 350,000 502,350	Shorted C-8 Shorted C-16 Shorted C-15 Shorted C-10
Audio Control Grid	502, 350	500,000	Shorted C-18
Audio Screen	Open	0 50,000 1,200	Shorted C-16 Shorted C-15 Shorted C-11
Audio Plate	Open	0	Shorted C-11
A+ Lead (Yellow)	Open	0	Shorted C-17
A— Lead (Black) (R-9 at Minimum)	5	Open	Open R-9
-16½C (Green)	2,350	0 Open	Shorted C-18 Open R-10A or R-10B
Tap on Divider Resistor	850	0 Open	Shorted C-19 Open R-10B

REFERENCE POINT—+B LEAD (RED)

Measurement Point	Correct Reading (Ohms)	Incorrect Reading (Ohms)	Defect
1st Det. Screen	50,000	Open	Open R-4
1st Detector Plate	28	Open 0	Open L-3 Shorted C-5
Oscillator Plate	50,000	Open	Open R-8
I. F. Screen Grid	Same as	1st Det.	
I. F. Plate	34	Open	Open L-5
2nd Detector Plate	300,000	Open	Open R-6
Audio Screen	0	Open	Open Connection
Audio Plate	1,200	Open	Open L-6

MISCELLANEOUS

Plate I. F. to Cont. Grid of 2nd Det.	Open	0	Shorted C-7
Plate 2nd Det. to Grid Audio	Open	0	Shorted C-10
Oscillator Plate to Grid	Open	4	Shorted C-14
I. F. Cont. Grid to arm of Vol. Control	28	Open 0	Open L-4 Shorted C-6
—16½C Lead to Ant. Lead	Open	28	Shorted C-3

MODELS 3132,3134,3140—VOLTAGES AT SOCKETS
VOLUME CONTROL AT MAXIMUM—B VOLTAGE 125 TOTAL

Type of Tube	*Position of Tube*	*Function*	*Filament Voltage*	*Control Grid Voltage*	*Screen Voltage*	*Screen Current MA*	*Plate Voltage*	*Plate Current MA*
32	1	1st Det.	2.0	2.0(1)	60	.3	120	1.2
34	2	I. F.	2.0	5.0(2)	60	.7	120	2.1
30	3	Osc.	2.0	.2(3)	—	—	50	1.2(3)
32	4	2nd Det.	2.0	1.6(1)	11(1)	.1	62(1)	.1
33	5	Audio	2.0	.5(1)	120	2.1	120	9.0

(1) Not true reading due to resistance in circuit.
(2) This reading will be 3 volts or 5 volts depending upon analyzer used.
(3) Varies with frequency. Affected by analyzer.

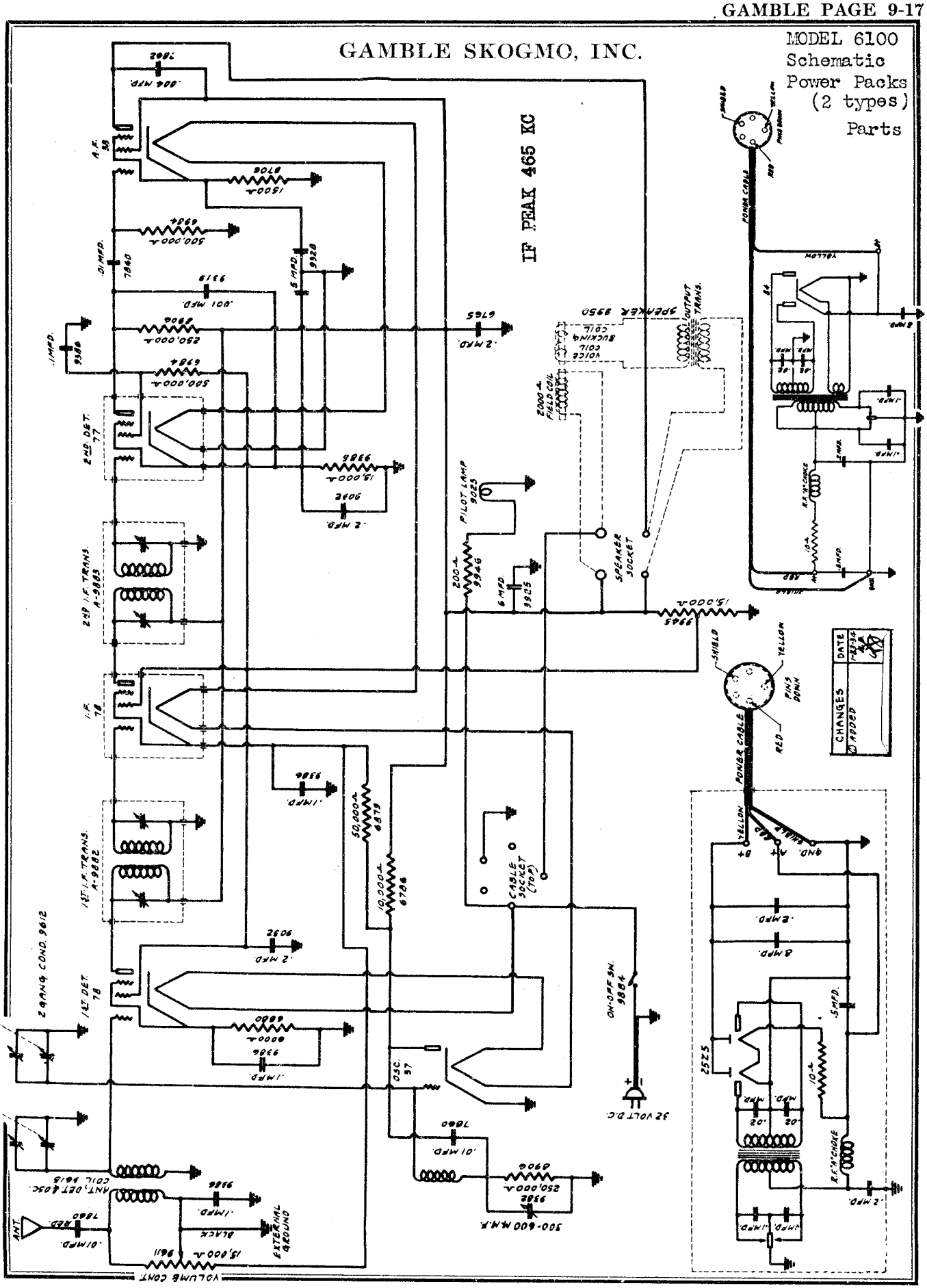

©John F. Rider, Publisher

MODEL 6100
Voltage, Notes
Alignment, Parts

GAMBLE-SKOGMO, INC.

This receiver is designed to operate on 32 volt battery plants only and must not be used on 36 volt battery plants without a voltage regulator. Generally, it is not advisable to operate the receiver while the generator is charging the battery due to the fact that considerable radio interference (static noise) may be encountered. This is not a reflection on the receiver, but is due to interference caused by the power plant generator, itself. Some generators have built-in traps to eliminate this interference and when so constructed this particular type of plant generator will not cause interference. If excessive static noise is encountered be sure that it is not caused by the 32 volt plant generator.

THIRTY-TWO VOLT POWER UNIT: Two power units have been furnished with the six tube 32 volt receiver, one unit utilizes a 25Z5 tube and the other an 84 tube. Diagrams for both of these units are shown on the receiver circuit diagram. It will be noted from the parts and price list that all parts with the exception of the power transformer and tube sockets are interchangeable. When ordering these parts be sure to order by part number.

NOTE: The dynamotor type unit supplied with the five tube 32 volt receiver cannot be used with the six tube receiver nor can the power units (utilizing the 84 or 25Z5 tube) furnished with the six tube receiver be used with the five tube 32 volt set.

The 32 volt power unit is shipped unmounted and must be placed in the sound-proof celotex compartment. In the console models this is located below the receiver mounting board and in the table models it is located above the chassis. To install the power unit in the sound-proof box remove the wood screws which hold the celotex back to the box, then place the power unit on the rubber mounting blocks provided inside of this box so that the unit is floating free on these rubber insulators. It is very important that the unit does not touch the side of the box. If excessive vibration is noticed be sure to check the power unit installation, as excessive vibration will result if it is not properly mounted on all of the rubber supports or if it is permitted to touch the side of the celotex housing.

PILOT LIGHT: A type T-3¼ #40 6.3 volt pilot light is used. The pilot light is readily accessible for removal from the rear of the cabinet.

ANTENNA AND GROUND: Under ordinary conditions an aerial from twenty-five to seventy-five feet in length including lead-in will prove ample. In some locations which are located a considerable distance from broadcast stations it may be necessary to use a longer aerial than this to obtain satisfactory daylight reception. Never place the aerial lead-in in close proximity to the 32 volt lighting lines, as considerable static noise may be picked up if the antenna lead-in is run parallel to the 32 volt power lines for any distance.

INTERMEDIATE ALIGNMENT: Only when an intermediate transformer has become defective due to an open or burned out winding should it be necessary to readjust the intermediate transformer. For aligning either the intermediate transformer or the variable condenser it is necessary that an oscillator be used with some type of output measuring device. To align the intermediate transformer:

1. Connect the high side of the oscillator output to the control grid of the #36 modulator tube. The ground side of the oscillator should be connected to the ground lead.
2. Set the oscillator at 465 kilocycles (this must be accurate) and adjust the output of the oscillator so that a convenient reading is obtained on the output meter.
3. Align the first intermediate transformer by turning one of the intermediate transformer trimmer screws up and down until maximum reading is obtained on the output meter. Then adjust the other trimmer screw in the same manner.
4. The second I. F. transformer should next be adjusted in the same manner. The intermediate transformer trimmer screws are accessible through the small hole in the top of the intermediate transformer shields.

To align the variable condenser:

1. Connect the high output side of the oscillator to the set antenna lead and the ground side of the oscillator to the ground lead.
2. Tune the receiver to 1400 kilocycles on the dial and set the oscillator to this frequency.
3. Adjust the variable condenser trimmer screws for maximum output reading.
4. Tune the set to approximately 600 kilocycles on the dial and adjust the oscillator frequency to 600 kilocycles. Adjust the padding condenser located on the rear of the chassis adjacent to the antenna and ground leads and accessible through the hole in the chassis for maximum output reading.

When making this adjustment be sure to rock the variable condenser to the right and left using the position where the greatest reading is obtained.

VOLTAGE TABLE

Line Voltage : 32 Volts
Volume Control: Full On

TUBE		FIL.	PLATE	SCREEN	CATHODE
78	1st Detector	6.5	160	70	5
37	Oscillator	6.5	100		20
78	I.F.	6.5	160	70	25
77	2nd Detector	6.5	65*	25*	25
38	Output	6.5	150	160	15
25Z5	Rectifier or 84 Rectifier				

* Comparative voltage only.
Read voltage from socket to receiver chassis.

9612 Two Gang Condenser
9880 Tuning Dial
9881 Pilot Light Socket
9023 Pilot Light

9946 Wire Wound Resistor Strip 15,000 Ohms
9945 Wire Wound Resistor Strip 200 Ohms
9925 6 Mfd. Electrolytic Condenser
9328 Dual 5 Mfd. Electrolytic Condenser
9882 First I. F. Transformer
9883 Second I. F. Transformer
9615 Antenna, Detector & Oscillator Coil
6765 .2 Mfd. 400 Volt Condenser
9032 .2 Mfd. 200 Volt Condenser
9386 .1 Mfd. 200 Volt Condenser

7860 .01 Mfd. 400 Volt Condenser
7862 .004 Mfd. 400 Volt Condenser
9319 .001 Mfd. Moulded Condenser
8906 250,000 Ohm 1/3 Watt Resistor
6984 500,000 Ohm 1/3 Watt Resistor
6786 10,000 Ohm 1/3 Watt Resistor
9706 1,500 Ohm 1/3 Watt Resistor
6880 6,000 Ohm 1/3 Watt Resistor
9385 15,000 Ohm 1/3 Watt Resistor
107 32 Volt Power Unit complete with 25Z5 Tube
107A 32 Volt Power Unit complete with 84 Tube
9907 Three Conductor Power Cable with Plug
8701 Vibrator
8702 .5 Mfd. Condenser
8703 .02-.02 Mfd. Condenser
8704 .1-.1 Mfd. Condenser
8705 8 Mfd. Condenser
8706 1 Mfd. Condenser
8707 Cord & Plug
8708 RF A Choke
8709 Transformer used with 25Z5 Tube
8710 Transformer used with 84 Tube
8711 5 Ohm Resistor
9884 Off and On Switch
9611 Volume Control
9382 Padding Condenser

©John F. Rider, Publisher

Schematic, Voltage, Trimmers Alignment

GAROD RADIO CORP.

MODELS Challenger II
Challenger III

CHALLENGER III

CIRCUIT SCHEMATIC, ETC.-SAME AS CHALLENGER I

FOR ADJUSTMENT OF "PRESTOMATIC" SELECTOR-BUTTONS--SEE MODEL 782

1500 KILOCYCLE ADJUSTMENT - The short-circuit is removed from the oscillator condenser and the grid clip replaced in its normal position on the cap of the 6A7 tube. The "hot" lead from the signal generator is connected to the antenna lead of the receiver and the ground lead to the ground of the receiver. With the volume control set at maximum and a minimum input signal from the signal generator, the band switch is turned to the right and the receiver dial set at 1500 kc. The oscillator trimmer is adjusted so as to bring the signal in at this setting. The oscillator trimmers are reached through holes on the front apron of the chassis, underneath the dial and to the right of the wave band switch. The 1500 kc. trimmer is the one nearest the wave band switch. After the oscillator is set, the antenna trimmer is adjusted for maximum output as indicated by the output meter. This trimmer is on the front section of the variable condenser.

600 KC PADDER ADJUSTMENT - With all connections as above, the signal generator is set at 600 KC and the signal tuned in on the dial. The padder for this frequency is located on the right side of the variable condenser. This padder should be adjusted for maximum response of the receiver, while the tuning condenser is rocked slightly back and forth. The 1500 kc. adjustment should then be rechecked.

14 MEGACYCLE ADJUSTMENT - Turn the Wave Band Switch to the left. Set the signal generator to 14 M.C. and turn the dial pointer to correspond to this frequency. Adjust the oscillator trimmer for this band so that the signal is received exactly at this setting. Then adjust the trimmer on top of the antenna coil (located behind and to the right of the dial) for maximum output.

VOLTAGE TABLE

TUBE	FUNCTION	H'T'R	PLATE	SG.GR.	CATH.	OSC.PL.
6A7	det.-osc.	6.3	92.	65.0	2.5	80.0
6D6	i.f. ampl.	6.3	92.	92.0	2.0	----
75	diode det. and 1st audio	6.3	40.0	----	----	----
2516	audio outp.	25.	90.	92.0	7.5	----
2525	rectifier	25.	- 92.	----	120.	----

NOTE: Fil. voltages measured with a high impedance A.C. voltmeter, other voltages with a high resistance. (1000 OHMS per volt) voltmeter.

CHALLENGER II

INSTRUCTIONS FOR INSTALLATION, OPERATION AND ALIGNMENT
POWER CONSUMPTION - 45 WATTS

This receiver operates on either direct current or alternating current of any frequency on voltage between 105 and 130. If voltages in excess of this value are to be applied to the receiver, a special Ballast Tube must be used. When operating from direct current, if after the receiver has been turned on for about three quarters of a minute, no reception is obtained, the plug must be reversed in the socket. On alternating current, there is generally no difference, though sometimes, quieter operation results.

ANTENNA: A small indoor antenna consisting of about 20 feet of wire, laid around the moulding, or placed under a rug, or thrown out the window is generally sufficient to give excellent operation. In locations very remote from broadcast stations, it is advantageous to use an outdoor antenna from 50 to 75 feet long. In particularly difficult cases, it may be necessary to use a special short-wave antenna with shielded or transposed lead-in. Kits containing all parts necessary for such an installation are available.

WAVE BAND SWITCH

POSITION	WAVE BAND
Left	17.5 to 53 meters - Foreign & American Short waves
Right	175 to 550 " - Regular Broadcast and some police calls.

Turn to left for short waves and to the right for regular broadcast reception. Some police calls can be obtained at the extreme end of the broadcast band as indicated on the dial.

To operate the receiver, turn the SWITCH & VOLUME CONTROL (shown in the illustration, all the way to the right, at which time the dial should light up. About a minute is required for the tubes to heat. The volume may be adjusted to any level by turning the knob to the left for less volume and to the right for more.

TUNING KNOB controls the DIAL, which is divided into two scales. The Broadcast frequency is read on the upper half and the short wave on the lower half of the dial.

ALIGNMENT PROCEDURE

Realignment of this receiver should not be attempted unless all other possible causes of faulty operation have first been thoroughly investigated. An accurately calibrated signal generator which will cover the various wavebands, and an output meter for indicating the effects of adjustments, are required.

I.F. ADJUSTMENT - The signal generator is set at 456 kc. The "hot" lead from the signal generator is connected to the grid cap on the 1st detector (6A7) tube, the clip having first been removed from the tube cap. The ground lead is connected to the receiver chassis. The oscillator section (rear) of the gang tuning condenser is short-circuited and the volume control turned on full. The i.f. trimmers are then adjusted for maximum gain in the receiver. These trimmers are located on top of the i.f. transformer shield can and on the chassis to the left of the 6D6 tube which are situated in the rear of the chassis.

©John F. Rider, Publisher

MODELS 2B2,2B2-1,2B6,2B6-1
Schematic,Socket,Trimmers

GAROD RADIO CORP.

Voltage,Alignment

VOLTAGES MEASURED FROM SOCKET TERMINALS TO CHASSIS WITH 1000 ohm-per-volt METER WB SW.IN B'CAST POS. BATT.-FULL VOLTAGE.

TUBE	FUNCTION	PLATE	SCREEN	FIL.	OSC. PL.
1C7G	Converter	135	67.5	2.0	80
1D5G	1st I.F. amp.	135	67.5	2.0	
1D5G	2nd I.F. amp.	125	67.5	2.0	
1H6G	Det. & 1st Audio	75		2.0	
1H4G	Driver	110		2.0	
1J6G	Audio Output	135		2.0	

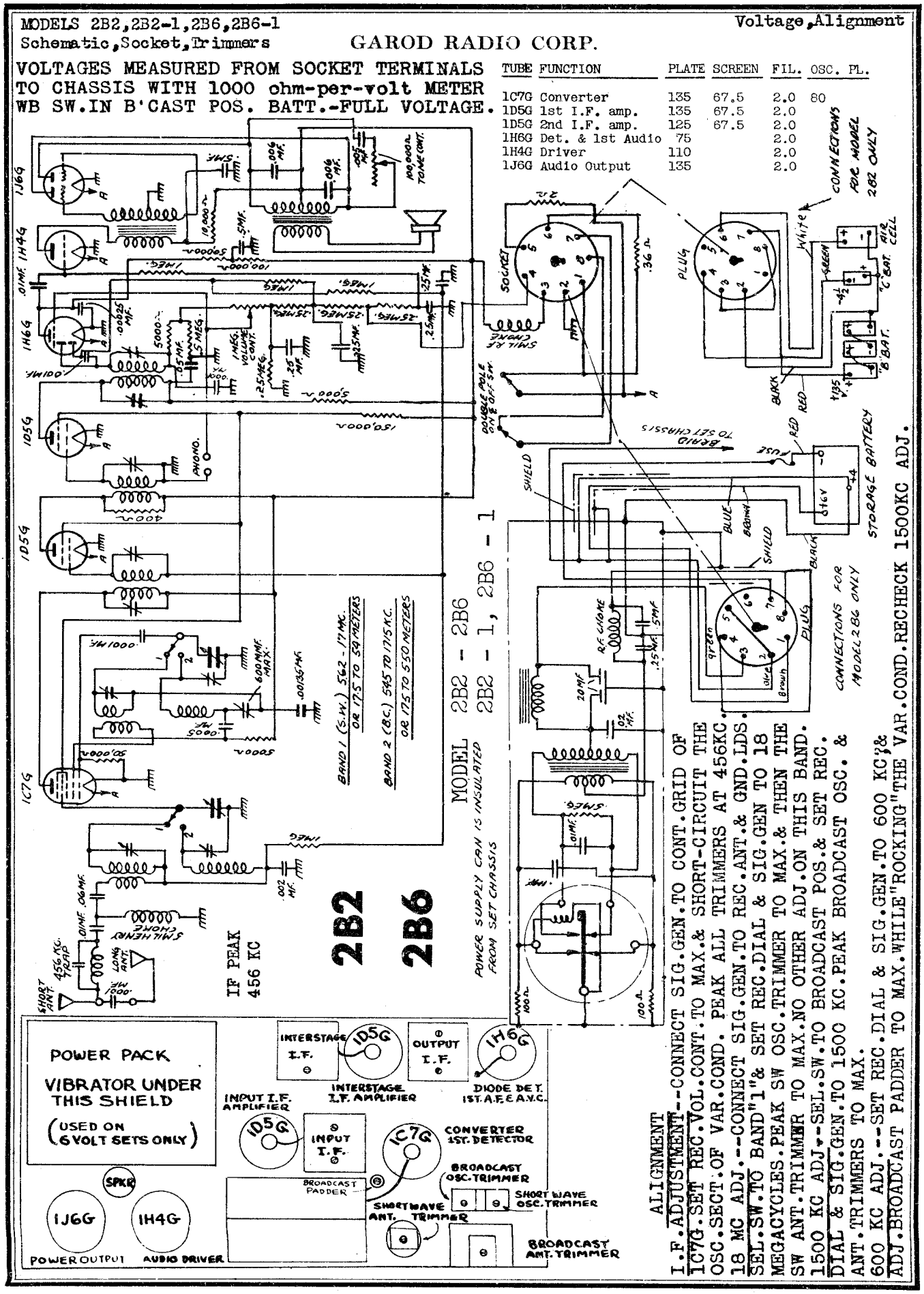

ALIGNMENT

I.F.ADJUSTMENT--CONNECT SIG.GEN.TO CONT.GRID OF 1C7G.SET REC.VOL.CONT.TO MAX.& SHORT-CIRCUIT THE OSC.SECT.OF VAR.COND. PEAK ALL TRIMMERS AT 456KC.

18 MC ADJ.--CONNECT SIG.GEN.TO REC.ANT.& GND.LDS. SEL.SW.TO BAND"1"& SET REC.DIAL & SIG.GEN TO 18 MEGACYCLES.PEAK SW OSC.TRIMMER TO MAX.& THEN THE SW ANT.TRIMMER TO MAX.NO OTHER ADJ.ON THIS BAND.

1500 KC ADJ.--SEL.SW.TO BROADCAST POS.& SET REC. DIAL & SIG.GEN.TO 1500 KC.PEAK BROADCAST OSC. & ANT.TRIMMERS TO MAX.

600 KC ADJ.--SET REC.DIAL & SIG.GEN.TO 600 KC'& ADJ.BROADCAST PADDER TO MAX.WHILE"ROCKING"THE VAR.COND.RECHECK 1500KC ADJ.

MODELS 205C,205L,205-1,206L
206C,206-1,206P4

GAROD RADIO CORP

Schematic,Voltage,Alignment

205-206

600 KC PADDER ADJUSTMENT - With all connections as before the signal generator is set at 600 KC and the signal tuned in on the dial. The padder for this frequency is found on the front sub-panel of the receiver, directly under the dial. This padder should be adjusted for maximum response of the receiver, while the tuning condenser is rocked slightly back and forth. The 1500 kc adjustment should then be rechecked.

MODEL 205C,206L,205L,205-1,206C,206L,206-1,206P4
POWER CONSUMPTION - 45 WATTS

VOLTAGE TABLE

TUBE	FUNCTION	H'T'R	SC.GR	PLATE	CATH	OSC.PL.
6A7	Det.-Osc.	6.3	85	205	2.5	180
6K7	I.F. Amp.	6.3	85	205	2.5	---
6Q7	Diode Det. and 1st audio	6.3	--	80	1.2	---
42	Audio Output	6.3	205	200	0	---
80	Rectifier	5.0	---	---	205	---

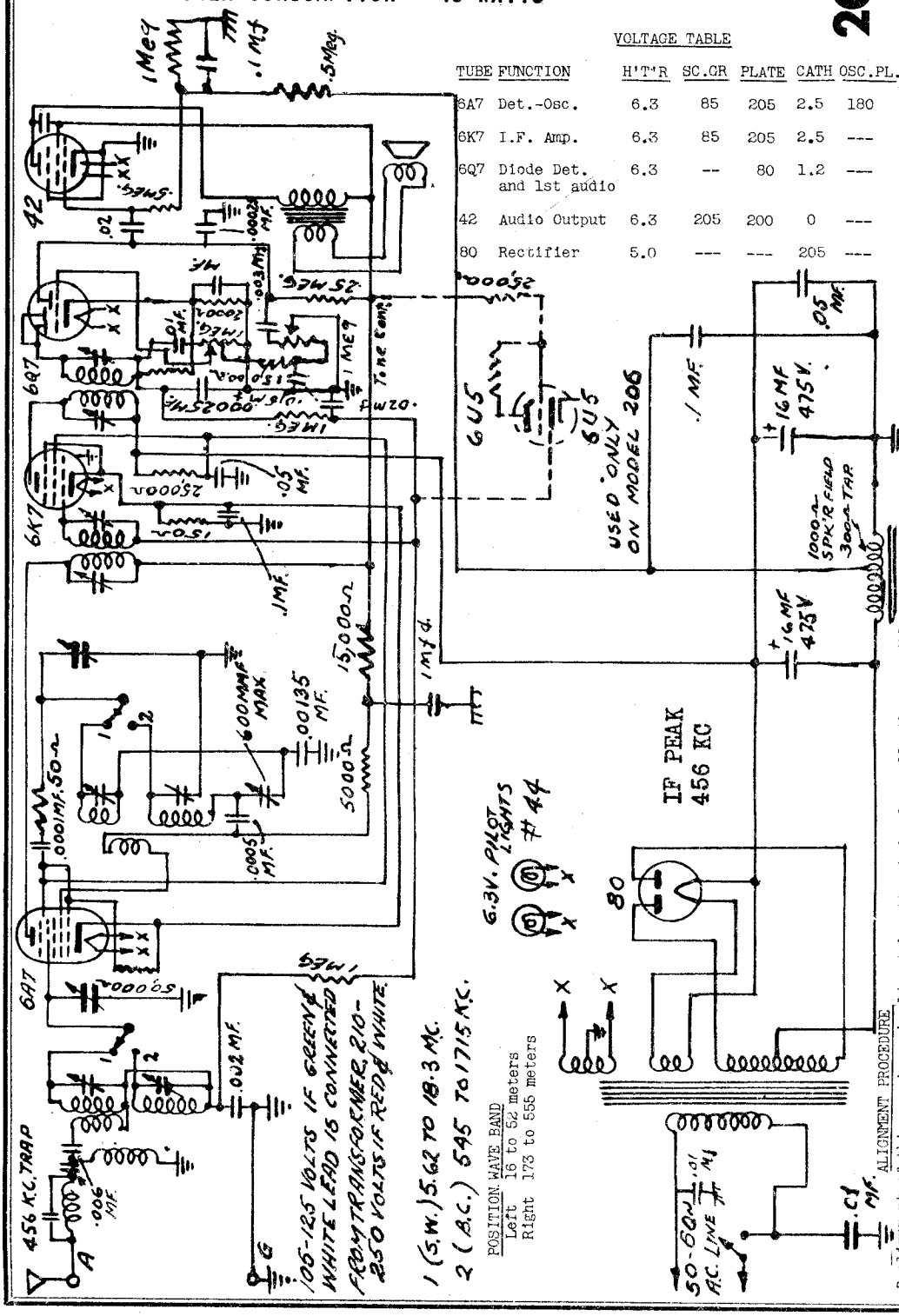

ALIGNMENT PROCEDURE

Realignment of this receiver should not be attempted unless all other possible causes of faulty operation have first been thoroughly investigated. An accurately calibrated signal generator which will cover the various wave bands, and an output meter for indicating the effects of adjustments, are required.

I.F. ADJUSTMENT - The signal generator is set at 456 kc. The "hot" lead from the signal generator is connected to the grid cap on the 1st detector (6A7) tube, the clip having first been removed from the tube cap. The ground lead is connected to the receiver chassis. The oscillator section (front) of the gang tuning condenser is short-circuited and the volume control turned on full. The 1.f. trimmers are then adjusted for maximum gain in the receiver. These trimmers are located on top of the 1.f. transformer shield cans, which are situated in the rear of the chassis. The one towards the right is the 1st 1.f. transformer and the left one is the 2nd 1.f. transformer.

1.5 MEGACYCLE ADJUSTMENT - The short-circuit is removed from the oscillator condenser and the grid clip replaced in its normal position on the cap of the 6A7 tube. The "hot" lead from the signal generator is connected to the antenna lead of the receiver and the ground lead to the ground of the receiver. With the volume control set at maximum and a minimum input signal from the signal generator, the band switch is turned to the left and the receiver dial set at 18 mc. The oscillator trimmer is adjusted so as to bring the signal in at this setting. The oscillator coil is underneath the chassis and is located directly under the variable gang condenser. The short wave trimmer is over the short wave winding (Heavy spaced wire.) After the oscillator is set, the antenna trimmer is adjusted for maximum output as indicated by the output meter. (Again the S.W. antenna trimmer is located over the heavy spaced winding on the antenna coil, and is accessible from the top of the chassis.) There are no other adjustments on this band.

150 KC KILOCYCLE ADJUSTMENT - Turn the Wave Band Switch to the right. Set the signal generator to 1500 kc. and turn the dial pointer to correspond to this frequency. Adjust the oscillator trimmer for this band so that the signal is received exactly at this setting. (This trimmer is located over the close-wound fine winding on the oscillator coil.) Adjust the Broadcast antenna trimmer for maximum output as described previously, (this trimmer is over the small 5 section winding and is accessible from the top.

©John F. Rider, Publisher

MODELS 237,337
Schematic

GAROD RADIO CORP.

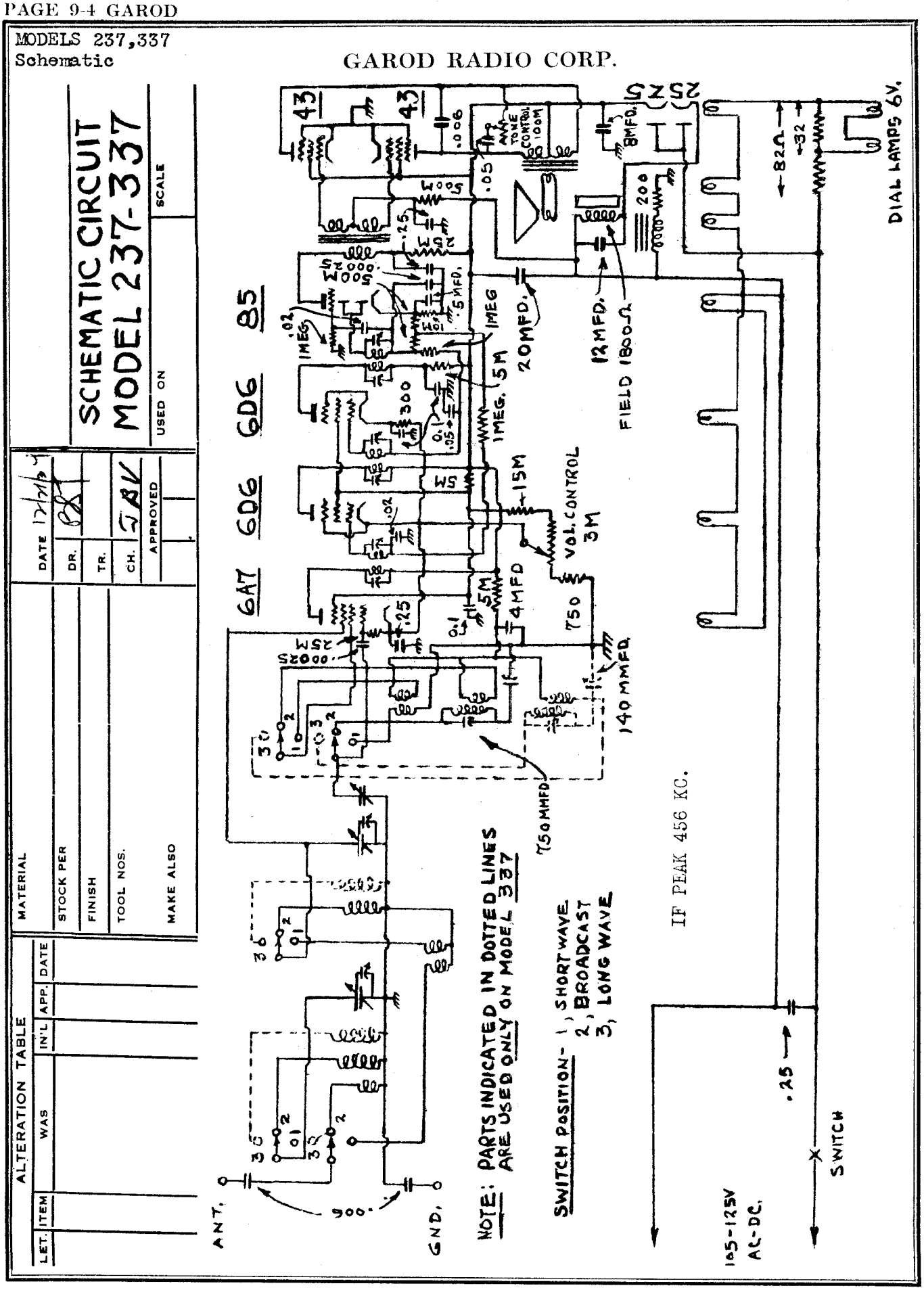

©John F. Rider, Publisher

GAROD RADIO CORP.

MODEL 250
Schematic, Voltage
Alignment

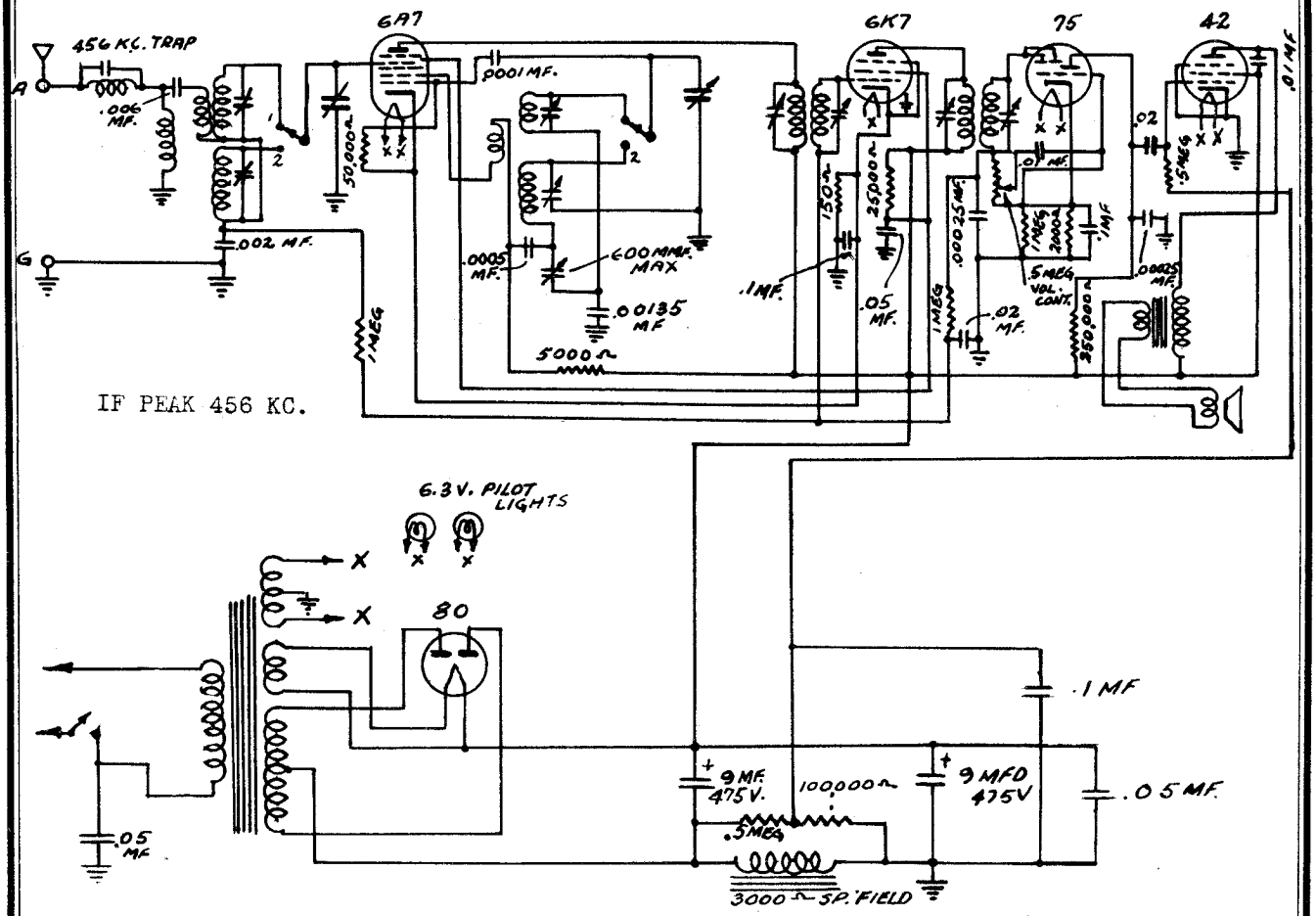

105-125 VOLTS IF GREEN & WHITE LEAD FROM TRANSFORMER
210-250 VOLTS IF RED & WHITE LEAD FROM TRANSFORMER

BAND 1 (S.W.) 5.62 TO 16 M.C. OR 18.5 TO 54 METERS
BAND 2 (B.C.) 545 TO 1715 K.C. OR 175-550 METERS

VOLTAGE TABLE

TUBE	FUNCTION	H.T.R	PLATE	SC.GR	CATH.	OSC.PL.
6A7	Det.-Osc.	6.3	205	85	2.5	180
6K7	I.F. Amp.	6.3	205	85	2.5	---
75	Diode Det., and 1st audio	6.3	80	--	1.2	---
42	Audio Output	6.3	200	205	0	---
80	Rectifier	5.0	---	---	205	---

ALIGNMENT PROCEDURE

Realignment of this receiver should not be attempted unless all other possible causes of faulty operation have first been thoroughly investigated. An accurately calibrated signal generator which will cover the various wave bands, and an output meter for indicating the effects of adjustments, are required.

I.F. ADJUSTMENT - The signal generator is set at 456 kc. The "hot" lead from the signal generator is connected to the grid cap on the 1st detector (6A7) tube, the clip having first been removed from the tube cap. The ground lead is connected to the receiver chassis. The oscillator section (front) of the gang tuning condenser is short-circuited and the volume control turned on full. The i.f. trimmers are then adjusted for maximum gain in the receiver. These trimmers are located on top of the i.f. transformer shield cans, which are situated in the rear of the chassis. The one towards the right is the 1st i.f. transformer and the left one is the 2nd i.f. transformer.

14 MEGACYCLE ADJUSTMENT - The short-circuit is removed from the oscillator condenser and the grid clip replaced in its normal position on the cap of the 6A7 tube. The "hot" lead from the signal generator is connected to the antenna lead of the receiver and the ground lead to the ground of the receiver. With the volume control set at maximum and a minimum input signal from the signal generator, the band switch is turned to the left and the receiver dial set at 14 mc. The oscillator trimmer is adjusted so as to bring the signal in at this setting. The oscillator coil is underneath the chassis and is located directly under the variable gang condenser. The short wave trimmer is over the short wave winding (Heavy spaced wire.) After the oscillator is set, the antenna trimmer is adjusted for maximum output as indicated by the output meter. (Again the S.W. antenna trimmer is located over the heavy spaced winding on the antenna coil, and is accessible from the top of the chassis.) There are no other adjustments on this band.

1500 KC KILOCYCLE ADJUSTMENT - Turn the Wave Band Switch to the right. Set the signal generator to 1500 kc. and turn the dial pointer to correspond to this frequency. Adjust the oscillator trimmer for this band so that the signal is received exactly at this setting. (This trimmer is located over the close-wound fine winding on the oscillator coil.) Adjust the Broadcast antenna trimmer for maximum output as described previously, (this trimmer is over the small 5 section winding and is accessible from the top.)

600 KC PADDER ADJUSTMENT - With all connections as above, the signal generator is set at 600 KC and the signal tuned in on the dial. The padder for this frequency is found on the front sub-panel of the receiver, directly under the dial. This padder should be adjusted for maximum response of the receiver, while the tuning condenser is rocked slightly back and forth. The 1500 kc adjustment should then be rechecked.

©John F. Rider, Publisher

MODELS 307,307E,
307L,307T,307-1

GAROD RADIO CORP.

Schematic,
Socket,Trimmers

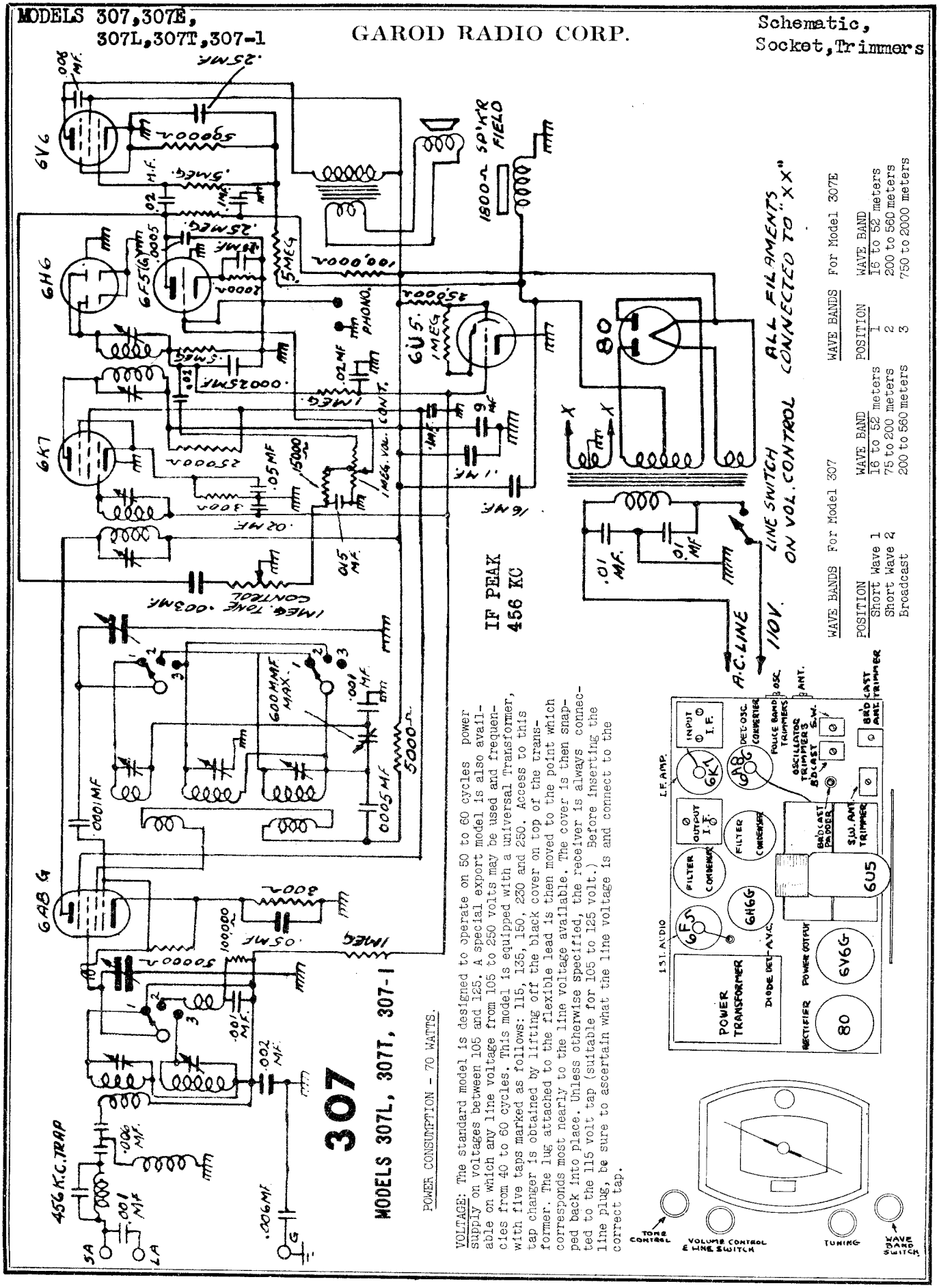

WAVE BANDS For Model 307

POSITION	WAVE BAND
Short Wave 1	16 to 52 meters
Short Wave 2	75 to 200 meters
Broadcast	200 to 560 meters

WAVE BANDS For Model 307E

POSITION	WAVE BAND
1	16 to 52 meters
2	200 to 560 meters
3	750 to 2000 meters

POWER CONSUMPTION - 70 WATTS.

VOLTAGE: The standard model is designed to operate on 50 to 60 cycles power supply on voltages between 105 and 125. A special export model is also available on which any line voltage from 105 to 250 volts may be used and frequencies from 40 to 60 cycles. This model is equipped with a universal Transformer, with five taps marked as follows: 115, 135, 150, 230 and 250. Access to this tap changer is obtained by lifting off the black cover on top of the transformer. The lug attached to the flexible lead is then moved to the point which corresponds most nearly to the line voltage available. The cover is then snapped back into place. Unless otherwise specified, the receiver is always connected to the 115 volt tap (suitable for 105 to 125 volt.) Before inserting the line plug, be sure to ascertain what the line voltage is and connect to the correct tap.

©John F. Rider, Publisher

MODELS 309T, 309L, 309E-1, 309-2
GAROD RADIO CORP. 309-3, 309E-2, 309E-3, 309P-5, 309P-7
309E-P5, 309E-P7
Schematic

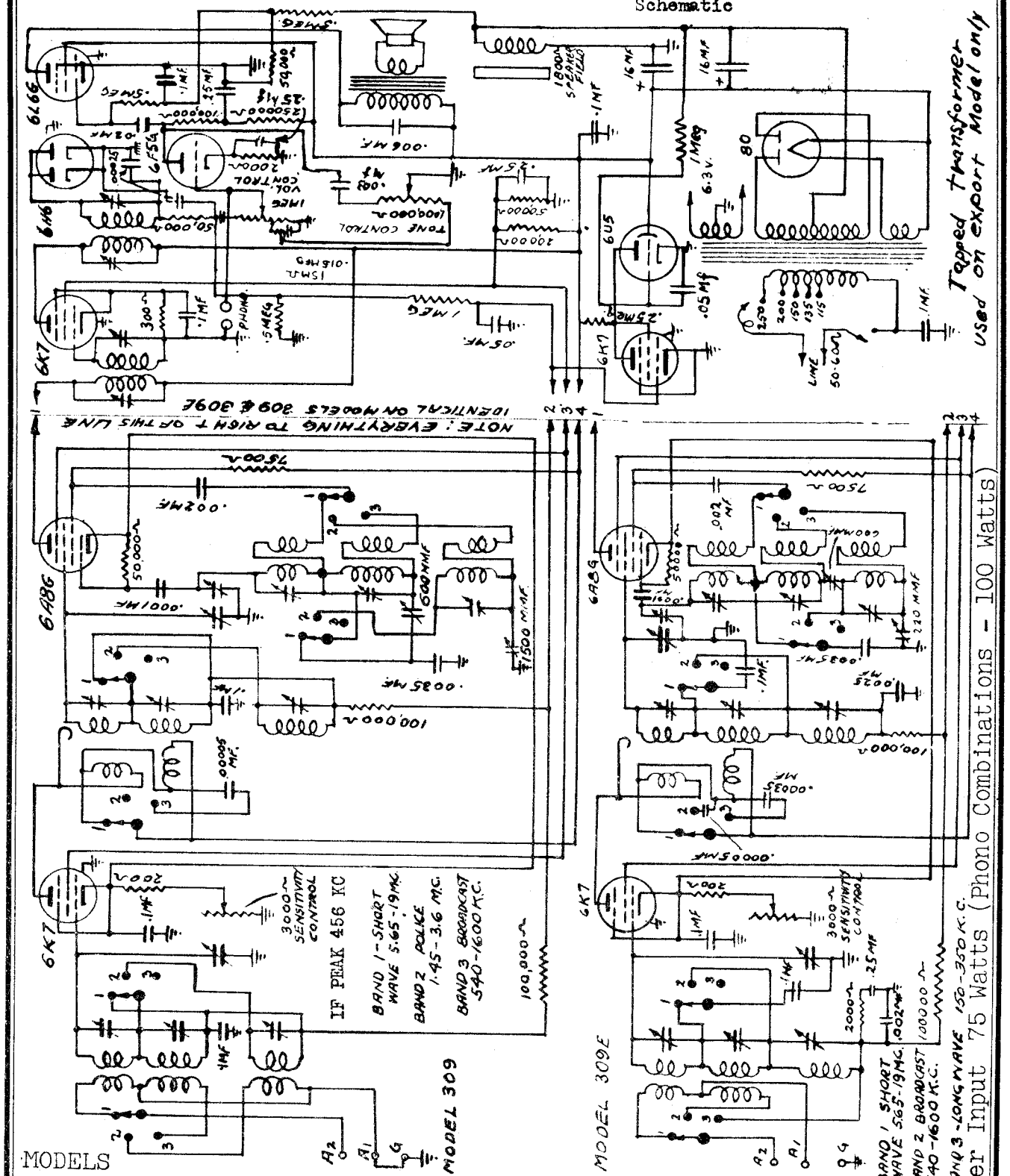

MODELS

309T, 309L, 309 - t, 309E - 1; Consoles 309 - 2, 309 - 3, 309E - 2, 309E - 3, Combinations 309P - 5, 309P - 7, 309E - P5, 309E - P7.

All voltages except filament, are measured from socket terminals to chassis and with a 1000 Ohms per volt voltmeter. The set must be in operation and the sensitivity control in its maximum clockwise position. Wave Band switch in broadcast position.

Filament voltages are taken from filament prong to filament prong at tube socket and may be measured with a low impedance AC voltmeter.

©John F. Rider, Publisher

MODELS 309T,309L,309E-1,309-2
309-3,309E-2,309E-3,309P-5,309P-7
309E-P5,309E-P7

GAROD RADIO CORP.

Socket,Trimmers,
Voltage,Alignment

SERVICE NOTES FOR THE MODEL 309 - 309E
9 TUBE, 3 BAND A.C. SUPERHETERODYNE RECEIVER

ALIGNMENT PROCEDURE

Realignment of this receiver should not be attempted unless all other possible causes of faulty operation have been thoroughly investigated. An accurately calibrated signal generator which will cover the necessary wave-bands and an output meter for indicating the effect of adjustments are required.

It is important to remember that in receivers of this kind which are equipped with automatic volume control it is necessary to use the minimum possible signal from the signal generator; otherwise the A.V.C. action will tend to nullify the variations in output as the trimmers are adjusted.

I.F. ADJUSTMENT - The signal generator is set at 456 Kc. and is connected to the grid of the first detector (6A8). With the oscillator section of the tuning condenser short-circuited and the receiver volume control at its maximum position, the i.f. trimmers are adjusted for maximum output. These trimmers may be found on tops of the i.f. transformer shield cans.

MODEL 309

18 MEGACYCLE ADJUSTMENT - The high side of the signal generator is connected to the antenna lead of the receiver and the low side to the ground lead. The receiver and the signal are both tuned to a frequency of 18 mc. with the selector switch in position for short wave band no. 1. The oscillator trimmer condenser is adjusted so that the 18 mc. signal is tuned in exactly at 18 mc. calibration point, with the volume control on full and the signal generator adjusted for minimum input. The antenna preselector and first detector trimmers are then adjusted in the order named for maximum output. These trimmers are located on the sides of the shield cans and are opposite the lower openings. This is the only adjustment on Band #1.

1500 K.C. ADJUSTMENT - With the band selector switch in position for operation on The Broadcast band and the receiver and signal generator both set at 1500 K.C. the procedure outlined above is repeated. The oscillator trimmer is found on the rear coil can, and is opposite the upper opening. The antenna preselector and interstage coil trimmers are located in the same positions on the corresponding shield cans.

The Signal generator is set at 600 K.C. and the signal tuned on the dial. The padder condenser for this band is adjusted for maximum gain while the gang tuning condenser is rocked slightly to the right and left. The 1500 K.C. adjustment should be rechecked. The 600 K.C. Padder is located on the right chassis apron, and is towards the front.

3 MC. ADJUSTMENT - The band selector switch is set in position for operation on the short wave 2. band. The receiver and signal generator are both set at 3 M.C. and the procedure outlined above is repeated. The oscillator trimmer is found on the Police Band Coil located under the chassis and is towards the rear. The other trimmers for this band are located in similar positions on the corresponding coils.

The signal generator is set at 1.7 M.C. and the signal tuned in on the dial. The padder condenser for the police band is adjusted for maximum response while the gang tuning condenser is rocked slightly to the right and left. The 3 M.C. adjustment should then be rechecked. The 1.7 MC. padder is located on the right apron and is towards the rear.

MODEL 309E

Model 309E is the same as Model 309 except that the Long Wave band is substituted for the Police Band. Alignment procedure is identical for the Short Wave and Broadcast Bands. The Long Wave Band is aligned as follows:

300 KC. ADJUSTMENT - The band selector switch is set in a position for operation on band no. 3. The receiver and generator are both tuned to 300 Kc. and the procedure outlined above is repeated. The oscillator trimmer is located under the chassis and is mounted on the rear coil.

The signal generator is set at 150 Kc. and the signal is tuned in on the dial. The padder condenser for this band is adjusted for maximum response while the gang tuning condenser is rocked slightly to the right and left. The 300 Kc. adjustment should then be rechecked. The 150 Kc. padder is located in a position corresponding to that of the 1.7 MC. padder on Model 309.

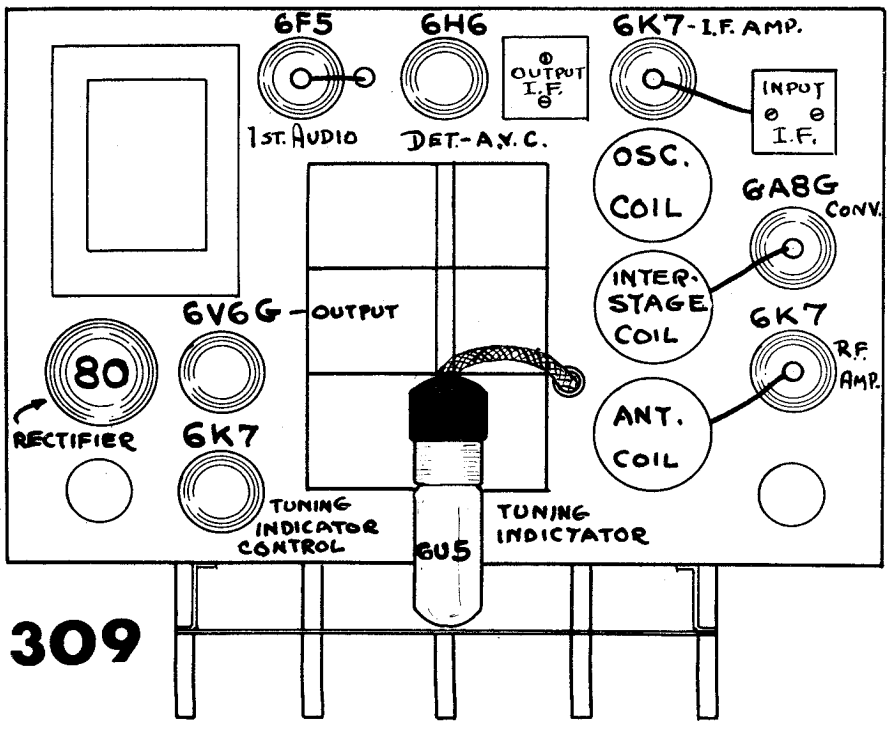

MODEL 309 - 309E

TUBE	FUNCTION	HEATER	PLATE	SC.GR.	CATH Volts	CATH Curr.	OSC. PL.
6K7	R.F. Amp.	6.3	265	110	3	7	220
6A8G	Det. Osc.	6.3	265	110	3	8	
6K7	I.F. Amp.	6.3	265	110	3.5	7	
6H6	Diode Det.	6.3	0		1	.5	
6F5G	1st Audio Amp.	6.3	80	265	0	52	
6V6G	Audio Output	6.3	255		380	75	
80	Rectifier	5.0					

©John F. Rider, Publisher

©John F. Rider, Publisher

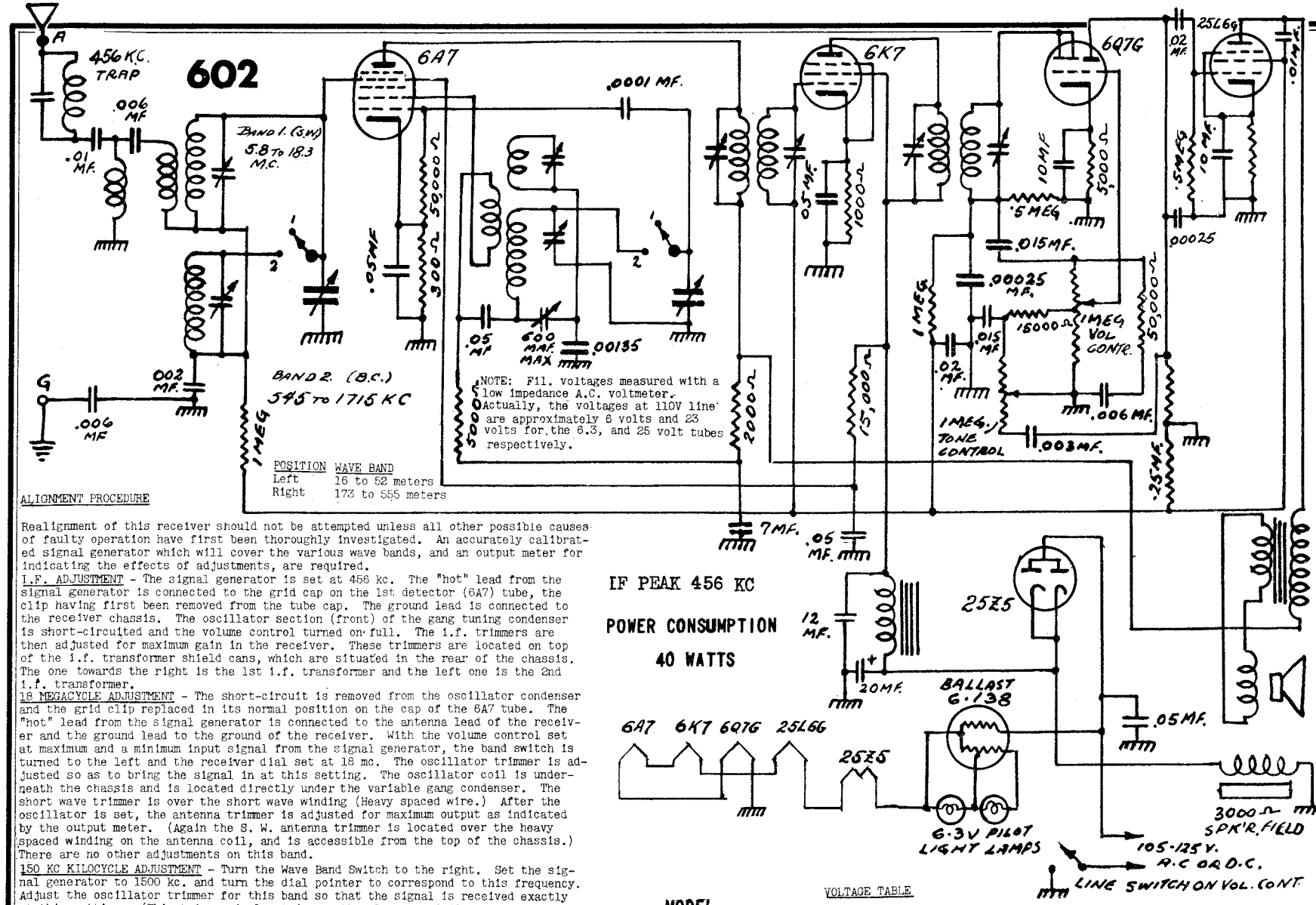

NOTE: Fil. voltages measured with a low impedance A.C. voltmeter. Actually, the voltages at 110V line are approximately 6 volts and 23 volts for the 6.3, and 25 volt tubes respectively.

POSITION	WAVE BAND
Left	16 to 52 meters
Right	173 to 555 meters

MODEL 602C,602L,602-1

VOLTAGE TABLE

TUBE	FUNCTION	H'T'R	PLATE	SC.GR.	CATH.	OSC.PL.
6A7	det.-osc.	4.5	100.2	65.0	---	90.0
6K7	i.f. ampl.	4.3	100.2	100.0	---	----
6Q7	diode det. and 1st audio	4.4	40.0	---	---	----
25L6	audio outp.	20.2	94.0	100.0	12.3	----
25Z5	rectifier	21.0	114.0	---	---	----

ALIGNMENT PROCEDURE

Realignment of this receiver should not be attempted unless all other possible causes of faulty operation have first been thoroughly investigated. An accurately calibrated signal generator which will cover the various wave bands, and an output meter for indicating the effects of adjustments, are required.

I.F. ADJUSTMENT - The signal generator is set at 456 kc. The "hot" lead from the signal generator is connected to the grid cap on the 1st detector (6A7) tube, the clip having first been removed from the tube cap. The ground lead is connected to the receiver chassis. The oscillator section (front) of the gang tuning condenser is short-circuited and the volume control turned on full. The i.f. trimmers are then adjusted for maximum gain in the receiver. These trimmers are located on top of the i.f. transformer shield cans, which are situated in the rear of the chassis. The one towards the right is the 1st i.f. transformer and the left one is the 2nd i.f. transformer.

18 MEGACYCLE ADJUSTMENT - The short-circuit is removed from the oscillator condenser and the grid clip replaced in its normal position on the cap of the 6A7 tube. The "hot" lead from the signal generator is connected to the antenna lead of the receiver and the ground lead to the ground of the receiver. With the volume control set at maximum and a minimum input signal from the signal generator, the band switch is turned to the left and the receiver dial set at 18 mc. The oscillator trimmer is adjusted so as to bring the signal in at this setting. The oscillator coil is underneath the chassis and is located directly under the variable gang condenser. The short wave trimmer is over the short wave winding (Heavy spaced wire.) After the oscillator is set, the antenna trimmer is adjusted for maximum output as indicated by the output meter. (Again the S. W. antenna trimmer is located over the heavy spaced winding on the antenna coil, and is accessible from the top of the chassis.) There are no other adjustments on this band.

150 KC KILOCYCLE ADJUSTMENT - Turn the Wave Band Switch to the right. Set the signal generator to 1500 kc. and turn the dial pointer to correspond to this frequency. Adjust the oscillator trimmer for this band so that the signal is received exactly at this setting. (This trimmer is located over the close-wound fine winding on the oscillator coil.) Adjust the Broadcast antenna trimmer for maximum output as described previously, (this trimmer is over the small 5 section winding and is accessable from the top.)

600 KC PADDER ADJUSTMENT - With all connections as above, the signal generator is set at 600 KC and the signal tuned in on the dial. The padder for this frequency is found on the front sub-panel of the receiver, directly under the dial. This padder should be adjusted for maximum response of the receiver, while the tuning condenser is rocked slightly back and forth. The 1500 kc adjustment should then be rechecked.

MODELS 703E, 703EC, 703EL
Schematic

GAROD RADIO CORP.

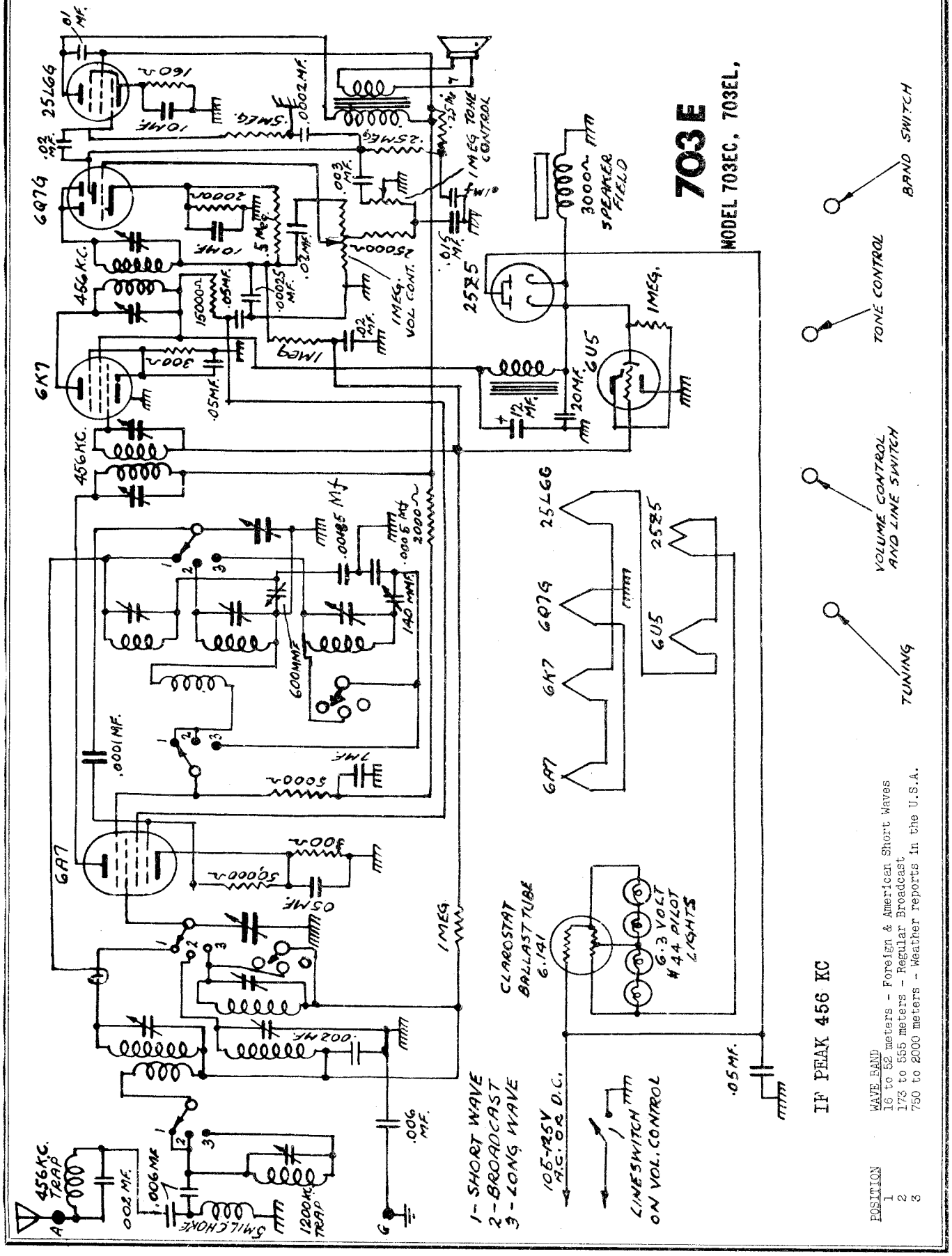

©John F. Rider, Publisher

GAROD RADIO CORP.

MODELS 782,782-1
Schematic, Voltage
Socket, Trimmers

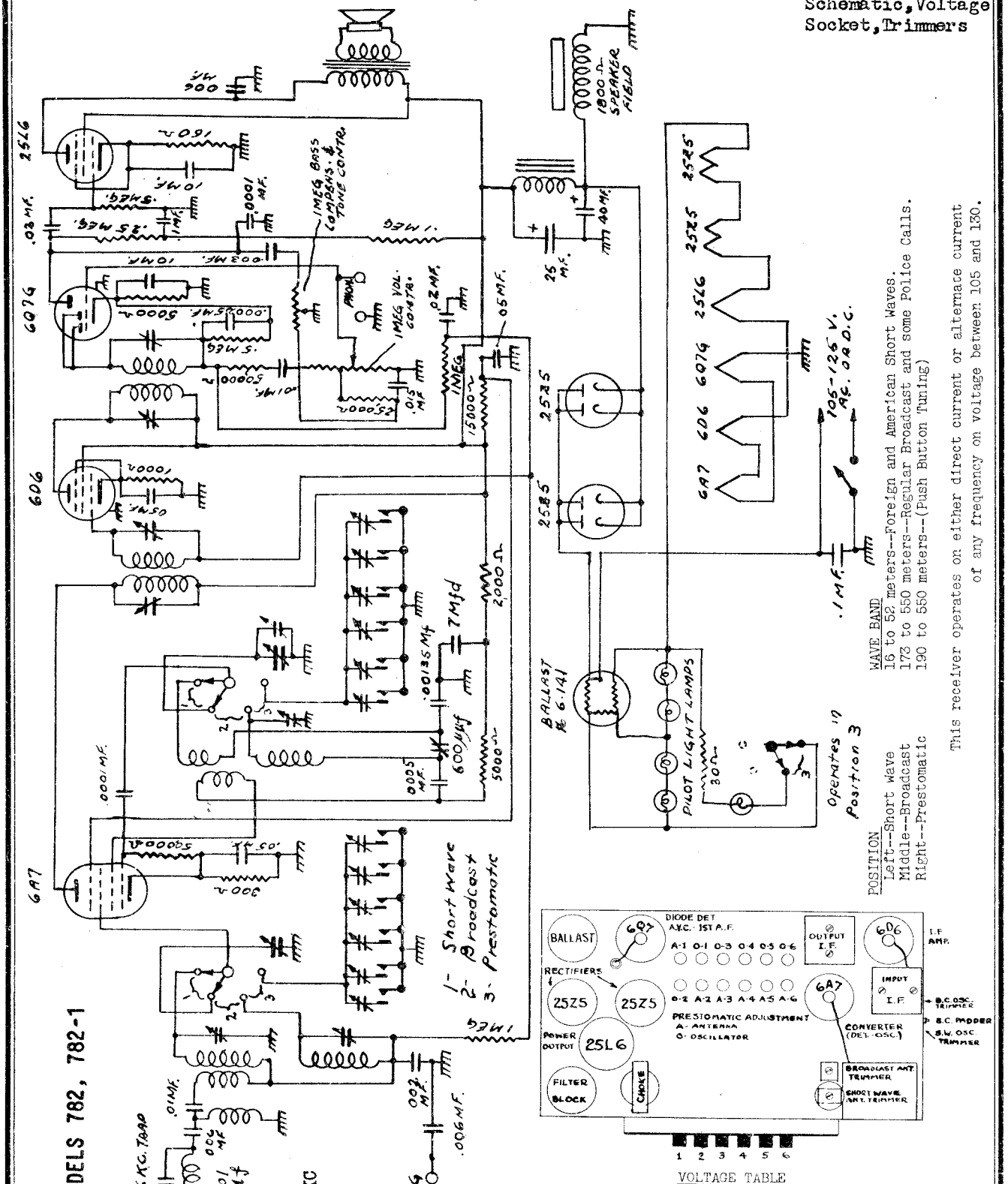

VOLTAGE TABLE

TUBE	FUNCTION	H'T'R	PLATE	SC.GR.	CATH.	OSC.PL.
6A7	det.-osc.	6.3	100.	65.	3.0	90.
6D6	I.F. Ampl.	6.3.	100	100.	3.0	--
6Q7G	Diode det. and 1st audio	6.3	40.	--	1.0	--
25L6G	Audio outp.	25.0	94.	100.	12.3	--
2-25Z5	rectifiers	25.0	--	--	114.0	--

NOTE Fil. voltages measured with a high impedance A.C. voltmeter

©John F. Rider, Publisher

MODELS 782,782-1
Alignment,Tuner

GAROD RADIO CORP.

MODEL 762
Tuner Data

ALIGNMENT PROCEDURE

Realignment of this receiver should not be attempted unless all other possible causes of faulty operation have first been thoroughly investigated. An accurately calibrated signal generator which will cover the various wave-bands and an output meter for indicating the effects of adjustments, are required.

I. F. ADJUSTMENT The signal generator is set at 456 kc. The "hot" lead from the signal generator is connected to the grid cap on the 1st detector (6A7) tube, the clip having first been removed from the tube cap. The ground lead is connected to the receiver chassis. The oscillator section (rear) of the gang tuning condenser is short-circuited and the volume control turned on full. The i.f. trimmers are then adjusted for maximum gain in the receiver. These trimmers are located on top of the i.f. transformer shield cans, which are situated in the rear of the chassis. The one towards the right is the 1st i.f. transformer and the left one is the 2nd i.f. transformer.

18 MEGACYCLE ADJUSTMENT The short-circuit is removed from the oscillator condenser and the grid clip replaced in its normal position on the cap of the 6A7 tube. The "hot" lead from the signal generator is connected to the atenna lead of the receiver and the ground lead to the ground of the receiver. With the volume control set at maximum and a minimum imput signal from the signal generator, the band switch is turned to the left and the receiver dial set at 18 mc. The oscillator trimmer is adjusted so as to bring the signal in at this setting. This trimmer and the Broadcast oscillator trimmer are located on the side apron. The Short Wave trimmer is towards the front. After the oscillator is set, the antenna trimmer is adjusted for maximum output as indicated by the output meter. This trimmer is on the top of the chassis over the Antenna Coil.

1500 KC KILOCYCLE ADJUSTMENT Turn the Wave Band Switch to the right. Set the signal generator to 1500 kc. and turn the dial pointer to correspond to this frequency. Adjust the oscillator trimmer for this band so that the signal is received exactly at this setting. (This trimmer is located as mentioned above.) Adjust the broadcast antenna trimmer for maximum output as described previously, (this trimmer is on the chassis behind the antenna coil).

600 KC PADDER ADJUSTMENT With all connections as above, the signal generator is set at 600 KC and the signal tuned in on the dial. The padder for this frequency is found over the oscillator trimmer. This padder should be adjusted for maximum response of the receiver, while the tuning condenser is rocked slightly back and forth. The 1500 kc adjustment should then be rechecked. After alignment, the setting of the Prestomatic buttons should be checked.

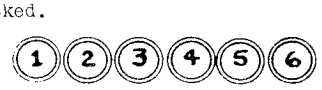

VIEWED FROM FRONT OF CABINET

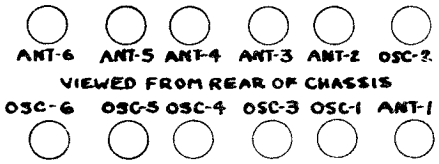

Instructions for Adjusting the PRESTOMATIC Selector

To set up this receiver for PRESTOMATIC operation, it is necessary to make a few simple adjustments, in order to select the six stations to be controlled by the push buttons. By following these instructions carefully, the layman can very easily accomplish this without any special knowledge of radio or the use of any instruments other than a small screwdriver.

For the purpose of explanation, let us number the buttons from left to right as 1, 2, 3, 4, 5, 6. Each of these buttons is limited to a range of frequencies as follows:

1-1550	KILOCYCLES	to 1000	KILOCYCLES	4-1150 KILOCYCLES	to 655 KILOCYCLES
2-1500	"	to 830	"	5- 940 "	to 540 "
3-1150	"	to 655	"	6- 940 "	to 540 "

Determine which six stations are to be set up. These, of course, should be local stations from which dependable reception may be obtained, and their field strength should be sufficiently high so that they can be received with good volume above the noise level. Consult a newspaper or other station list for the frequency of each of these selected stations. One station must fall within each of the Kilocycle ranges listed above. If such is not the case, another choice must be made. Arrange the selected stations in the order of their frequencies. Having made this determination, proceed as follows:

Connect Antenna and Ground. Turn the receiver ON by turning the Volume Control all the way to the right. The Dial will light. There are three positions on the Wave Band Switch: Left--Short Wave, Middle-Broadcast. and RIGHT--PRESTOMATIC TUNING. Turn to the middle or BROADCAST position. The set may now be tuned in the usual way by rotating the dial mechanism. Starting at one end of the dial, tune in the first station on the list which you have selected. Note the program and throw the switch to the Right or PRESTOMATIC position. WITHOUT CHANGING THE DIAL SETTING, DEPRESS BUTTON #1 (or you may start at #6). Now insert a screwdriver into the hole which controls the OSCILLATOR corresponding to the button covering the range of the station to which you have just been listening. (SEE SKETCH) Rotate this slowly until the same program is heard. (Check by throwing the switch back and forth between the BROADCAST and PRESTOMATIC positions.)

The Antenna lead from the receiver is now disconnected from the Antenna and either held in the hand or twisted loosely around the lead-in wire in order to reduce the signal strength, so as to permit more accurate adjustment. Now carefully tune the corresponding ANTENNA adjustment (again refer to sketch) until the station is heard clearest and loudest.

Repeat these adjustments as a check. Now reconnect the Antenna and proceed to the next button, repeating the procedure outlined above for each of the other five stations selected. The station markers are now cut from the list provided and forced into the recesses in the buttons. The celluloid discs are then inserted over these to protect the markers.

NOTE When setting the OSCILLATOR trimmer, be sure that you are tuning in the same station, not another one on the chain broadcasting the same program. Stations should be heard equally well on the regular BROADCAST or PRESTOMATIC positions. If this is not the case, recheck the adjustment.

IMPORTANT It is recommended that these adjustments be checked after about one week of operation, since there may be some slight shift due to climatic or other conditions. After this very little trouble should be experienced.

IN THE PRESTOMATIC POSITION, the dial light dims and the pilot light in the lower part of the dial is illuminated.

MODEL 782

©John F. Rider, Publisher

GAROD RADIO CORP.

MODEL 762
Schematic, Voltage
Alignment, Tuner

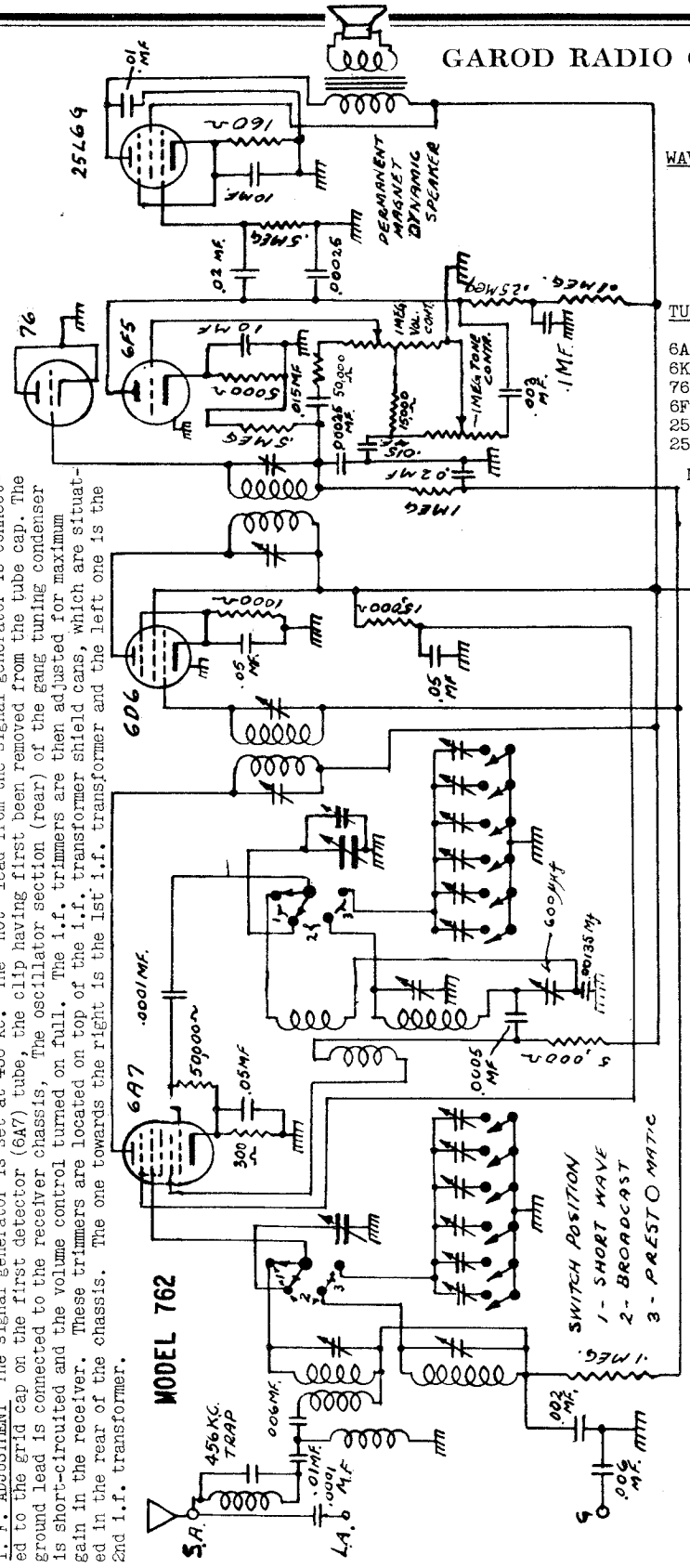

WAVE BAND SWITCH

POSITION	WAVE-BAND
Left	16 to 52 meters
Middle	173 to 555 meters
Right	190 to 555 meters--Prestomatic

VOLTAGE TABLE

TUBE	FUNCTION	H'T'R	PLATE	OSC.PL.	SC. GR.	CATH.
6A7	det.-osc.	6.3	100.2	90.0	65.0	3.0
6K7	1.f. ampl.	6.3	100.2	--	100.0	3.0
76	diode det.	6.3	--	--	--	--
6F5	1st audio	6.3	40.0	--	--	1.0
25L6	audio outp.	25.0	94.0	--	100.0	12.3
25Z5	rectifier	25.0	--	--	--	114.0

NOTE Fil. voltages measured with a high impedance A.C. voltmeter.

I. F. ADJUSTMENT The signal generator is set at 456 kc. The "hot" lead from the signal generator is connected to the grid cap on the first detector (6A7) tube, the clip having first been removed from the tube cap. The ground lead is connected to the receiver chassis. The oscillator section (rear) of the gang tuning condenser is short-circuited and the volume control turned on full. The i.f. trimmers are then adjusted for maximum gain in the receiver. These trimmers are located on top of the i.f. transformer shield cans, which are situated in the rear of the chassis. The one towards the right is the 1st i.f. transformer and the left one is the 2nd i.f. transformer.

1500 KC KILOCYCLE ADJUSTMENT Turn the Wave Band Switch to the middle. Set the signal generator to 1500 kc. and turn the dial pointer to correspond to this frequency. Adjust the oscillator trimmer for this band so that the signal is received exactly at this setting. (This trimmer is located on the front apron and is the lower one of the two.) Adjust the broadcast antenna trimmer for maximum output, as described previously. (this trimmer is on top of the chassis directly behind the dial.

600 KC PADDER ADJUSTMENT With all connections as above, the signal generator is set at 600 KC and the signal tuned in on the dial. The padder for this frequency is found on the top of the chassis, slightly to the left and behind the antenna coil. This padder should be adjusted for maximum response of the receiver, while the tuning condenser is rocked slightly back and forth. The 1500 kc adjustment should then be rechecked.

18 MEGACYCLE ADJUSTMENT The short-circuit is removed from the oscillator condenser and the grid clip replaced in its normal position on the cap of the 6A7 tube. The "hot" lead from the signal generator is connected to the antenna lead of the receiver and the ground lead to the ground of the receiver. With the volume control set at maximum and a minimum input signal from the signal generator, the band switch is turned to the left and the receiver dial set at 18 mc. The oscillator trimmer is adjusted so as to bring the signal in at this setting. The short wave trimmer is the upper one of the two on the front chassis apron. After the oscillator is setting, the antenna trimmer is adjusted for maximum output as indicated by the output meter. "The S. W. Antenna trimmer is located on top of the antenna coil, and is accessible from the top of the chassis.) There are no other adjustments on this band.

©John F. Rider, Publisher

AUTOMATIC TUNING DIAL

OPERATION:

The Automatic Tuning dial is of the familiar telephone type and is operated in a similar manner, except that only a single movement is needed to dial a station instead of a series of movements. The actual operation of "Dialing" a station is as follows:

The finger is inserted into the recess of the button which bears the marking of the desired station. The button is held by a spring which yields when pressed. When this is done the radio is "MUTED" or silenced, and no stations will be heard except rather faintly, if the volume control happens to be turned up all the way. With the button depressed, the dial is rotated so as to bring this button to the bottom of the dial as far as it will go, at which time a "click" will be heard and the dial can be moved no further. Should the dial come to a stop before the desired button reaches the bottom, and the pointer comes to the end of the calibration, it is necessary to reverse the direction of rotation, until the button is brought under the center of the dial and the click is heard. When the finger is removed, the desired station will be heard, perfectly tuned, without any necessity for re-adjustments.

The Volume and Tone controls are operated in the usual way to obtain the desired effect.

SETTING THE AUTOMATIC TUNING DIAL

Ten buttons are provided, which may very easily be set for ten desired stations. For the sake of explanation, we will number the buttons as shown in the sketch.

Each button will permit the selection of ONE station within its range. The range of frequencies which each will cover is tabulated below.

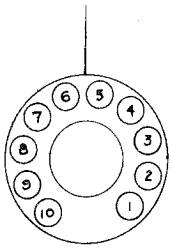

BUTTON	MODEL 1203, 1204E, 3012, 4012E, 1603, 1604E, 3016, 4016E and variations.	MODEL 903, 903E, 309, 309 E and variations.
1	454 - 568 Kilocycles	545 - 568 Kilocycles
2	568 - 615 "	568 - 620 "
3	615 - 690 "	620 - 690 "
4	690 - 790 "	690 - 800 "
5	790 - 920 "	800 - 920 "
6	920 - 1078 "	920 - 1060 "
7	1078 - 1240 "	1060 - 1200 "
8	1240 - 1420 "	1200 - 1340 "
9	1420 - 1620 "	1340 - 1480 "
10	1620 - 1740 "	1480 - 1550 "

First consult your newspaper or other periodical for the frequencies of the various stations which you would like to select automatically, and make a list of them. Then tune in any of the stations on your list. See from the chart above, which button covers the frequency of the desired station. Now rotate the dial, with the button depressed so that this button is moved towards the bottom until a "CLICK" is heard and the dial can no longer be moved in either direction. Now loosen this button, by turning it to the left (counter-clockwise). It is now possible to rock the dial in either direction thru a small angle only (with the button depressed).

The station may now be tuned in accurately by watching the tuning indicator tube in the upper part of the dial. When the Dark area is narrowest, the station is properly tuned. It may also be desirable as a double check to turn the volume control up all the way so that the station may be heard faintly to make sure that you are tuning in the desired station and not one on an adjacent channel. It is also advisable to watch the dial pointer as a further precaution, to see that we are still on the same frequency.

When this condition of accurate tuning is obtained, as indicated by the "Visual tuning indicator" and checked by ear, the adjustment may be locked by holding the dial rigidly in place with one hand and turning the button all the way to the right (clockwise) and tightening it as much as possible. The marker indicating the desired station is then inserted into the button and the celluloid disk is forced in over it to protect the marker.

The other buttons are then adjusted in the same way. It is suggested that a start be made at either button #1 or #10 and the others be taken in sequence.

Any buttons not in use are filled with Blank markers.

NOTE:

On Models 1603, 1604E, 3016, 4016E, when setting the Automatic Tuning Dial, the High Fidelity-Selectivity switch should be set in the "Selective" position, all the way to the right; and the Automatic Frequency control switched OFF. If this is not done, the setting will appear very broad, and operation may not be entirely satisfactory.

©John F. Rider, Publisher

MODELS 903T, 903L, 903E-T, 903E-L, 903-2, 903-3, 903E-2, 903-3, 903P-5, 903P-7, 903E-P5, 903E-P7

GAROD RADIO CORP.

Schematic

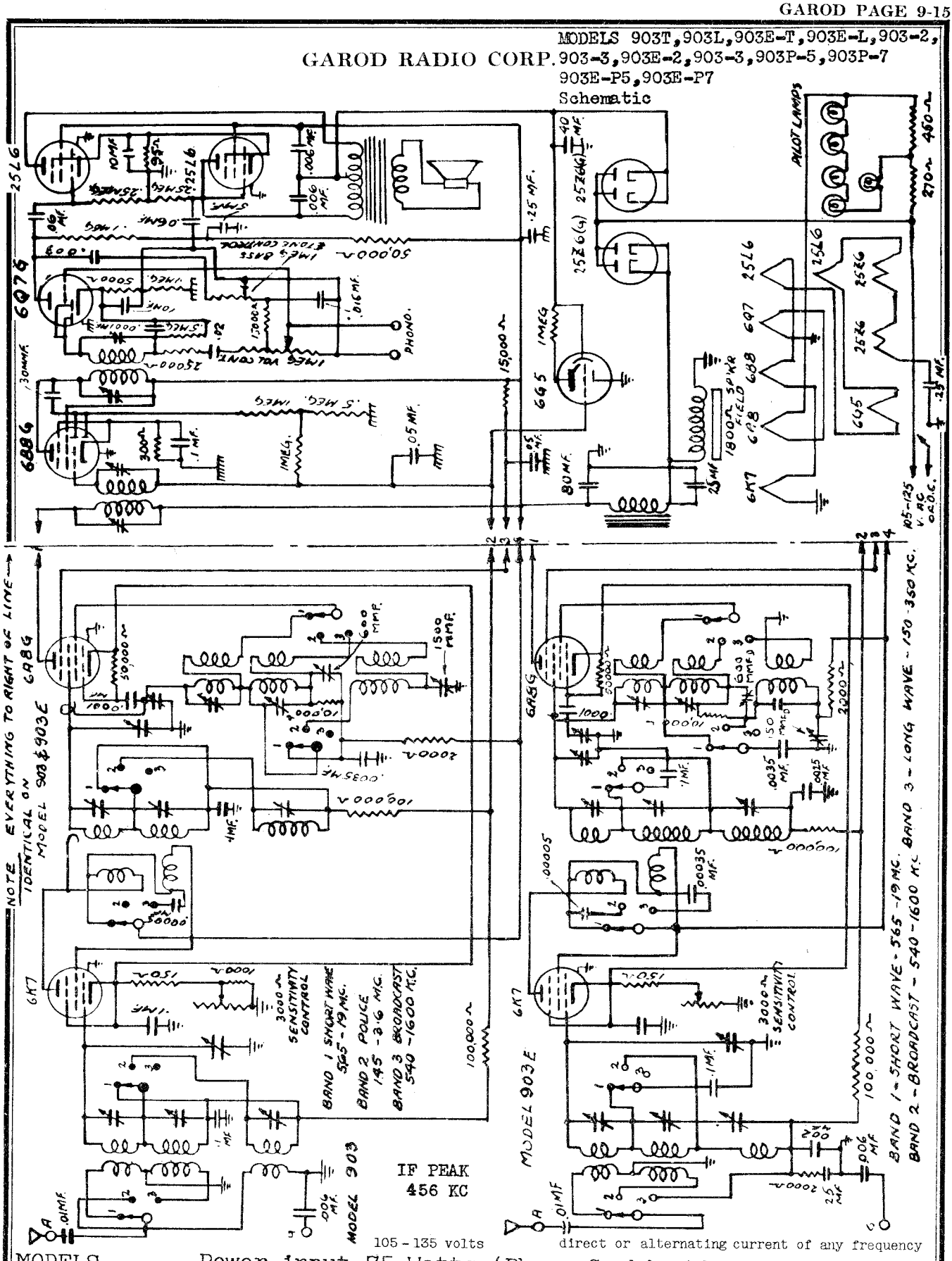

MODELS Power input 75 Watts (Phono Combinations - 100 Watts)
903T, 903L, 903E- T, 903E - L; Consoles 903 - 2, 903 - 3, 903E - 2, 903 - 3; Combinations 903P - 5; 903P - 7, 903E - P5, 903E - P7

©John F. Rider, Publisher

MODELS 903T,903L,903E-T,903E-L,903-2,
903-3,903E-2,903P-5,903P-7,903E-P5,903E-P7
Socket,Trimmers,Voltage,Alignment

GAROD RADIO CORP.

All voltages except filament, are measured from socket terminals to chassis and with a 1000 Ohms per volt voltmeter. The set must be in operation and the sensitivity control in its maximum clockwise position. Wave band switch in the broadcast position.

Filament voltages are taken from filament prong to filament prong at tube socket and measured with a high impedance AC voltmeter. (Rectifier Type)

ALIGNMENT PROCEDURE

It is important to remember that in receivers of this kind which are equipped with automatic volume control it is necessary to use the minimum possible signal from the signal generator; otherwise the A.V.C. action will tend to nullify the variations in output as the trimmers are adjusted.

I.F. ADJUSTMENT - The signal generator is set at 456 kc. and is connected to the grid of the first detector (6A8). With the oscillator section of the tuning condenser short-circuited and the receiver volume control at its maximum position, the i.f. trimmers are adjusted for maximum output. These trimmers may be found on tops of the i.f. transformer shield cans.

MODEL 903

18 MEGACYCLE ADJUSTMENT - The high side of the signal generator is connected to the antenna lead of the receiver and the low side to the ground lead. The receiver and the signal are both tuned to a frequency of 18 mc. with the selector switch in position for short wave band no. 1. The oscillator trimmer condenser is adjusted so that the 18 mc. signal is tuned in exactly at the 18 mc. calibration point, with the volume control on full and the signal generator adjusted for minimum input. The antenna preselector and first detector trimmers are then adjusted in the order named for maximum output. These trimmers are located on the sides of the shield cans and are opposite the lower openings. This is the only adjustment on band #1.

1500 K.C. ADJUSTMENT - With the band selector switch in position for operation on the broadcast band and the receiver and signal generator both set at 1500 K.C. the procedure outlined above is repeated. The oscillator trimmer is found on the rear coil can, and is opposite the lower opening. The antenna preselector and interstage coil trimmers are located in the same positions on the corresponding shield cans.

The signal generator is set at 600 K.C. and the signal tuned in on the dial. The padder condenser for this band is adjusted for maximum gain while the gang tuning condenser is rocked slightly to the right and left. The 1500 K.C. adjustment should then be rechecked. The 600 K.C. Padder is located on the right chassis apron, and is towards the front of the chassis.

3 MC ADJUSTMENT - The band selector switch is set in position for operation on the short wave 2 band. The receiver and signal generator are both set at 3 M.C. and the procedure outlined above is repeated. The oscillator trimmer is found on the police band coil located under the chassis and is towards the rear. The other trimmers for this band are located in similar positions on the corresponding coils.

The signal generator is set at 1.7 M.C. and the signal tuned in on the dial. The padder condenser for the police band is adjusted for maximum response while the gang tuning condenser is rocked slightly to the right and left. The 3 M.C. adjustment should then be rechecked. The 1.7 M.C. padder is located on the right apron and is towards the rear.

MODEL 903E

Model 903E is the same as Model 903 except that the Long Wave band is substituted for the Police Band. Alignment procedure is identical for the Short Wave and Broadcast Bands. The Long Wave Band is aligned as follows:

300 KC. ADJUSTMENT - The band selector switch is set in position for operation on band no. 3. The receiver and generator are both tuned to 300 kc. and the procedure outlined above is repeated. The oscillator trimmer is located under the chassis and is mounted on the rear coil.

The signal generator is set at 150 kc. and the signal is tuned in on the dial. The padder condenser for this band is adjusted for maximum response while the gang tuning condenser is rocked slightly to the right and left. The 300 kc. adjustment should then be rechecked. The 150 kc. padder is located in a position corresponding to that of the 1.7 M.C. padder on Model 903.

TUBE	FUNCTION	HEATER	PLATE	SC.GR.	CATH Volts	CATH Curr.	OSC. PL.
6K7	R.F. Amp.	6.3	120	120	2.0	7.0	
6A8G	Det. Osc.	6.3	120	50	2.0	5.5	100
6B8G	I.F. Amp. & AVC	6.3	120	120	1.2	4.	
6Q7G	Diode Det. & 1st Audio Amp.	6.3	80		2.0	.2	
25L6(2)	Audio Output	25.	125	120	8.5	52.	
25Z6G	Rectifier (B + for RF Amp.)	25.			125	80.	
25Z6G	Rectifier (B + for output tube plates)	25.			128	90.	

BAND — FREQUENCY RANGES

903 MODEL
S.W.-1-----5.65 to 19 Megacycles---15.8 to 53 Meters
S.W.-2-----1.45 to 3.65 " " ---82 to 207 "
BROADCAST--540 to 1570 K.C. -----191 to 555 "

903E MODEL
S.W. -----5.65 to 19 Megacycles---15.8 to 53 Meters
BROADCAST--540 to 1570 K.C. -----191 to 555 "
Long Wave--145 to 350 K.C. -----856 to 2070 "

MODEL **903**

9 TUBE, 3 BAND A.C.-D.C.
SUPERHETERODYNE RECEIVER

©John F. Rider, Publisher

GAROD RADIO CORP.

MODELS 1203T, 1203L, 1203-3, 1203-P6, 1203-P7, 1204ET, 1204E1, 1204-3, 1204E-P6, 1204E-P7

Schematic

MODELS 1203T, 1203L, 1203 - 3 Console; 1203 - P6, 1203 - P7 Combinations;
1204ET, 1204E1, 1204-3 Console; 1204E-P6, 1204E-P7 Combinations.

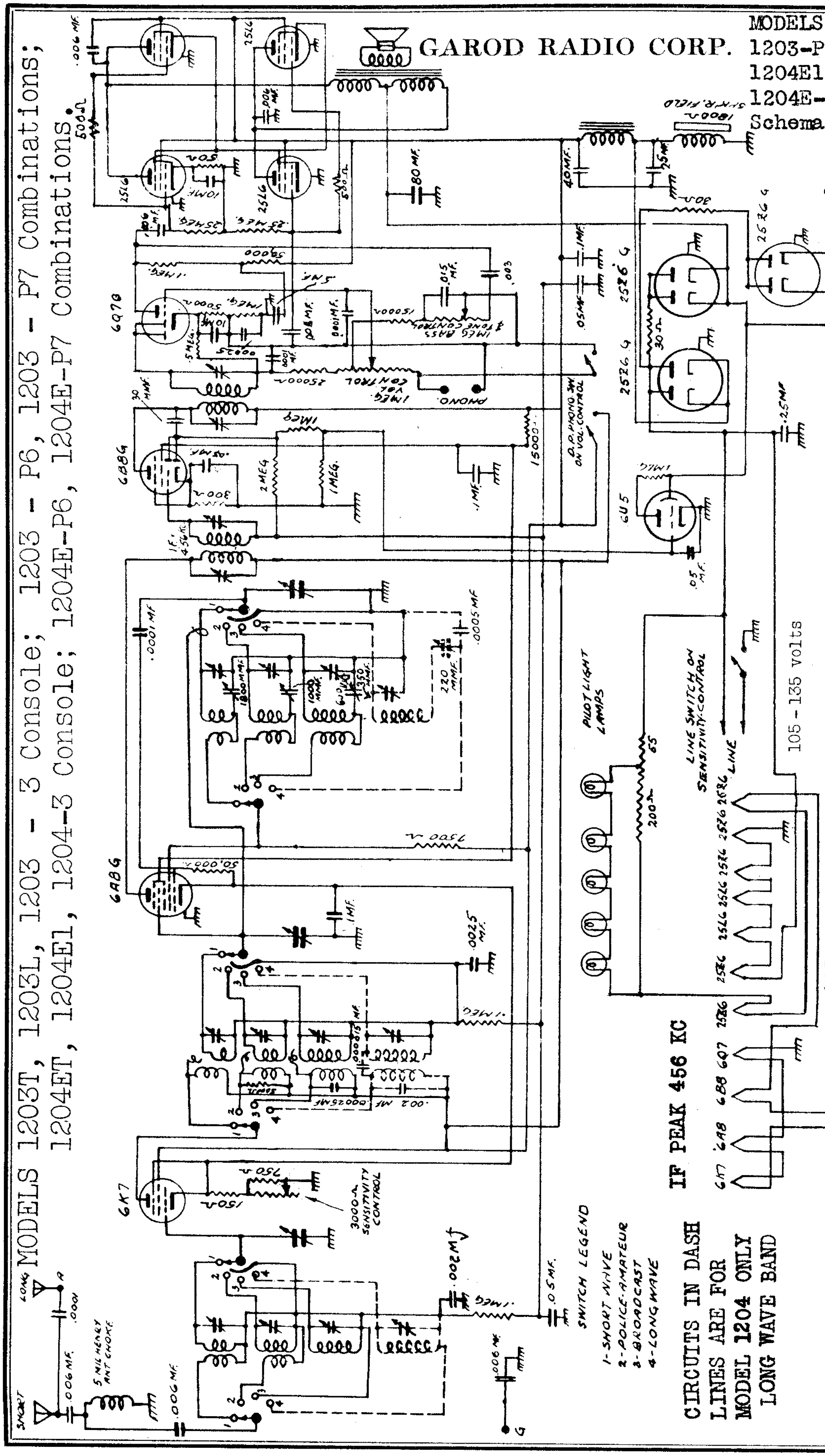

IF PEAK 456 KC

CIRCUITS IN DASH LINES ARE FOR MODEL 1204 ONLY LONG WAVE BAND

NOTE: - WAVE BAND SWITCH EQUIPPED WITH EXTRA CONTACTS INDICATED THUS - SHORT CIRCUITS ALL COILS OF LOWER FREQUENCY THAN THE ONE IN USE.

CURRENT: This receiver operates on either direct or alternating current of any frequency

105 - 135 volts

POWER INPUT: 120 Watts

(Phono Combinations - 145 watts).

BAND	FREQUENCY RANGES
S.W.-1	7.3 to 22 Megacycles -- 13.6 to 41 Meters
S.W.-2	2.3 to 7.5 " -- 40.0 to 130.5 "
BROADCAST	540 to 1735 K.C. -- 173 to 555 "
Long Wave	145 to 360 K.C. -- 832 to 2070 "

©John F. Rider, Publisher

MODELS 1203T,1203L,1203-3,1203-P6
1203-P7,1204ET,1204E1,1204-3,
1204E-P6,1204E-P7
Socket,Trimmers,Voltage,Alignment

GAROD RADIO CORP.

NOTE: LONG WAVE COILS & PADDERS USED ONLY ON MODEL 1204 4012

12 TUBE 3 (OR 4) BAND A.C.-D.C. SUPERHETERODYNE RECEIVER

MODELS	TUBE	FUNCTION	HEATER	PLATE	SC.GR.	CATH V	CATH I	OSC.PL
1203	6K7	RF Amp.	6.3	100	100	1.75	8.0	
	6A8G	1st Det. & Osc.	6.3	100	55	1.75	5.5	80
	6B8G	IF Amp.	6.3	100	100	2.00	6.0	
	25L6	(4) Audio Output	25	120	100	8.5	.50	
	2526G	Rectifier for Set	25			107	87.	
1204	2526G(2)	Rectifier for Output Plates	25			125	85.	
	6Q7G	Det. & 1st Audio	6.3	80		20	.2	

All voltages except filament, are measured from socket terminals to chassis and with a 1000 Ohms per volt voltmeter. The set must be in operation and the sensitivity control in its maximum clockwise position.

Filament voltages are taken from filament prong to filament prong at tube socket and measured with a high impedance AC voltmeter. (Rectifier Type).

ALIGNMENT PROCEDURE.

It is important to remember that in receivers of this kind which are equipped with automatic volume control it is necessary to use the minimum possible signal from the signal generator; otherwise the A.V.C. action will tend to nullify the variations in output as the trimmers are adjusted.

I.F. ADJUSTMENT - The signal generator is set at 456 kc. and is connected to the grid of the first detector 6A8G. With the oscillator section of the tuning condenser short-circuited and the receiver volume control at its maximum position, the i.f. trimmers are adjusted for maximum output. These trimmers may be found on the tops of the I.F. Transformers.

21 MEGACYCLE ADJUSTMENT - The high side of the signal generator is connected to the antenna lead of the receiver and the low side to the ground lead. The receiver and the signal are both tuned to a frequency of 21 mc. with the selector switch in position for short wave band no.1. The oscillator trimmer condenser is adjusted so that the 21 mc. signal is tuned exactly at the 21 mc. calibration point, with the volume control on full and the signal generator adjusted for minimum input. The antenna preselector and interstage trimmers are then adjusted in the order named for maximum output. These trimmers are located as indicated in the bottom view of the chassis.

7.5 MEGACYCLE ADJUSTMENT - The signal generator is set at 7.5 megacycle and the signal tuned in on the dial. The short wave padding condenser is adjusted for maximum output, while the gang condenser is rocked slightly to the right and left. The 18 megacycle adjustment should then be rechecked.

7 MC. ADJUSTMENT - With the band selector switch in position for operation on short wave band no. 2 and the receiver and signal generator both set at 7 mc. the procedure outlined above is repeated.

The signal generator is set at 2.4 mc. and the signal tuned in on the dial. The police band padder condenser is adjusted for maximum gain while the gang tuning condenser is rocked slightly to the right and left. The 7 mc. adjustment should then be rechecked.

1500 KC. ADJUSTMENT - The band selector switch is set in position for operation on the no. 3 band. The receiver and signal generator are both set at 1500 kc. and the procedure outlined above is repeated.

The signal generator is set at 600 kc. and the signal tuned in on the dial. The broadcast padder condenser is adjusted for maximum response while the gang tuning condenser is rocked slightly to the right and left. The 1500 kc. adjustment should then be rechecked

MODEL 1204 ONLY

300 KC. ADJUSTMENT - The band selector switch is set in position for operation on band no.4. The receiver and generator are both tuned to 300 kc. and the procedure outlined above is repeated.

The signal generator is set at 150 kc. and the signal is tuned in on the dial. The long wave padder condenser is adjusted for maximum response while the gang tuning condenser is rocked slightly to the right and left. The 300 kc. adjustment should then be rechecked.

©John F. Rider, Publisher

GAROD RADIO CORP

MODELS 1603,1604-4
Schematic, Voltage

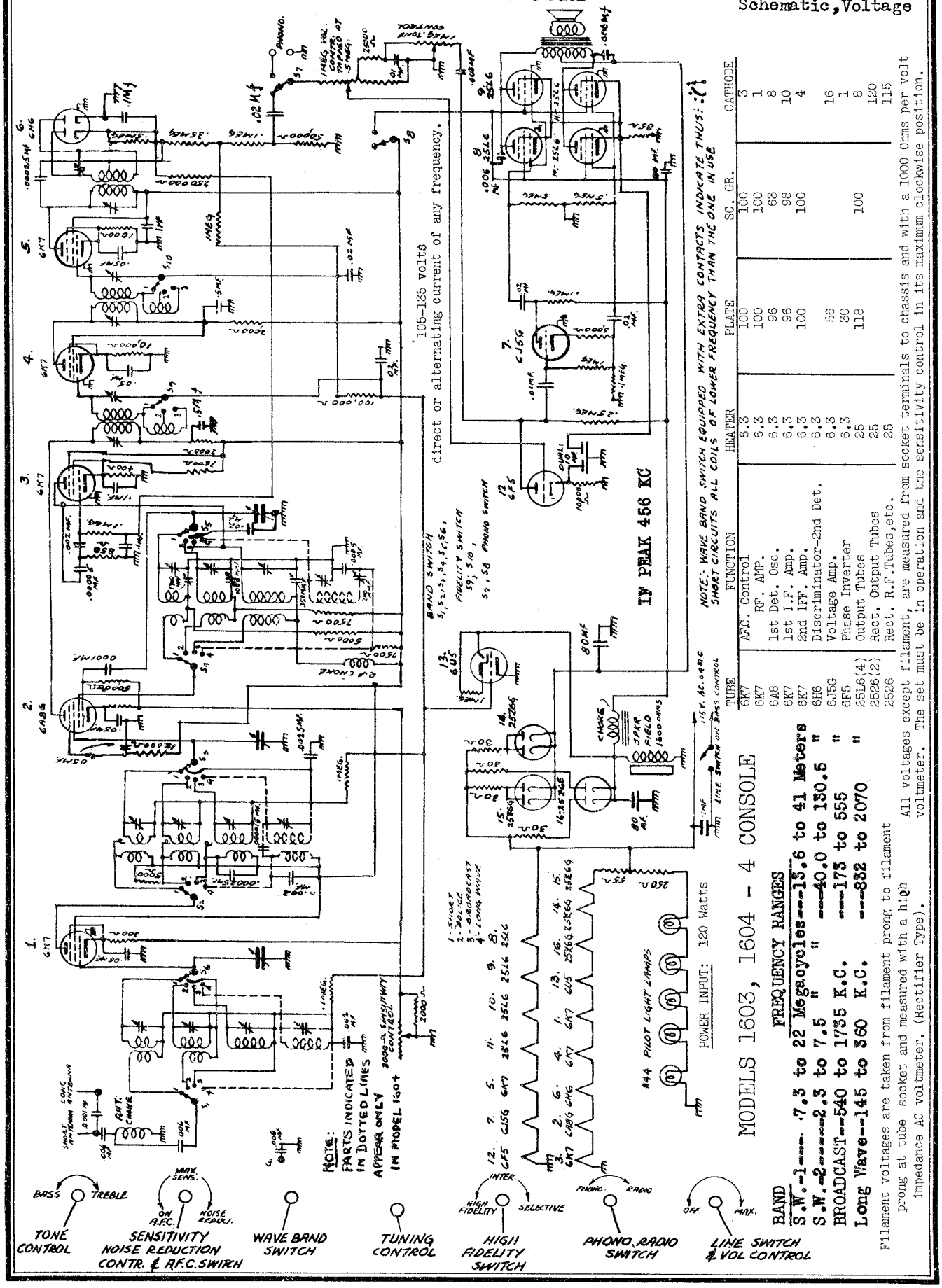

MODELS 1603, 1604 - 4 CONSOLE

FREQUENCY RANGES

BAND

S.W.-1---- 7.3 to 22 Megacycles---13.6 to 41 Meters
S.W.-2-----2.3 to 7.5 " ---40.0 to 130.5 "
BROADCAST--540 to 1735 K.C. ---173 to 555 "
Long Wave--145 to 360 K.C. ---832 to 2070 "

TUBE	FUNCTION	HEATER	PLATE	SC. GR.	CATHODE
6K7	AFC. Control	6.3	100	100	3
6K7	RF. AMP.	6.3	100	100	1
6A8	1st Det. Osc.	6.3	96	63	8
6K7	1st I.F. Amp.	6.3	96	98	10
6K7	2nd IFF. Amp.	6.3	100	100	4
6H6	Discriminator-2nd Det.	6.3			
6J5G	Voltage Amp.	6.3	56		16
6F5	Phase Inverter	6.3	30		1
25L6(4)	Output Tubes	25	118	100	8
2526(2)	Rect. Output Tubes	25			120
2526	Rect. R.F.Tubes,etc.	25			115

Filament voltages are taken from filament prong to filament prong at tube socket and measured with a high impedance AC voltmeter. (Rectifier Type).

All voltages except filament, are measured from socket terminals to chassis and with a 1000 Ohms per volt voltmeter. The set must be in operation and the sensitivity control in its maximum clockwise position.

©John F. Rider, Publisher

It is important to remember that in receivers of this kind which are equipped with automatic volume control it is necessary to use the minimum possible signal from the signal generator; otherwise the A.V.C. action will tend to nullify the variations in output as the trimmers are adjusted.

I.F. ADJUSTMENT - The signal generator is set at 456 kc. and is connected to the grid of the first detector 6A8G. With the oscillator section of the tuning condenser short-circuited and the receiver volume control at its maximum position, the i.f. trimmers are adjusted for maximum output. These trimmers may be found on the tops of the I.F. Transformers.

21 MEGACYCLE ADJUSTMENT - The high side of the signal generator is connected to the antenna lead of the receiver and the low side to the ground lead. The receiver and the signal are both tuned to a frequency of 21mc. with the selector switch in position for short wave band no. 1. The oscillator trimmer condenser is adjusted so that the 21 mc. signal is tuned exactly at the 21 mc. calibration point, with the volume control on full and the signal generator adjusted for minimum input. The antenna preselector and interstage trimmers are then adjusted in the order named for maximum output. These trimmers are located as indicated in the bottom view of the chassis.

7.5 MEGACYCLE ADJUSTMENT - The signal generator is set at 7.5 megacycle and the signal tuned in on the dial. The short wave padding condenser is adjusted for maximum output, while the gang condenser is rocked slightly to the right and left. The 18 megacycle adjustment should then be rechecked

7 MC. ADJUSTMENT - With the band selector switch in position for operation on short wave band no. 2.and the receiver and signal generator both set at 7 mc. the procedure outlined above is repeated.
The signal generator is set at 2.4 mc. and the signal tuned in on the dial. The police band padder condenser is adjusted for maximum gain while the gang tuning condenser is rocked slightly to the right and left. The 7 mc. adjustment should then be rechecked.

1500 KC. ADJUSTMENT - The band selector switch is set in position for operation on the no. 3 band. The receiver and signal generator are both set at 1500 kc. and the procedure outlined above is repeated.

THe signal generator is set at 600 kc. and the signal tuned in on the dial. The broadcast padder condenser is adjusted for maximum response while the gang tuning condenser is rocked slightly to the right and left. The 1500 kc. adjustment should then be rechecked.

AUTOMATIC FREQUENCY CONTROL - Should it be found that after a station is tuned in accurately (in the selective position) as indicated by the cathode ray tube, that when the A.F.C. switch is turned "ON", the signal is detuned or a change observed in the tone of the receiver, it will be necessary to readjust the "Discriminator" transformer which controls this action. A low range (0-5 or 0-10V.) high resistance volt meter or preferably a microammeter is inserted in series with the diode load resistor at the grounded end, which will indicate a maximum when a signal is tuned TO exact resonance. This 500,000 Ohms load resistor is located directly under the discriminator transformer. A 0-10 milliammeter is inserted in the cathode circuit of the A.F.C. control tube. An R.F. signal (any frequency in the Broadcast Band) is fed into the antenna and the receiver is tuned as accurately as possible to resonance (with the switch turned OFF). The Hi-fidelity switch is in the selective position. Now throw the secondary trimmer of the discriminator off resonance. Tune the primary for maximum output as indicated by the diode load meter. Turn the AFC switch "ON". Now tune the secondary trimmer, located at the bottom of the discriminator coil, underneath the chassis, so that when the A.F.C. switch is turned from the ON to the OFF position and vice versa, no change takes place in the cathode, current of the A.F.C. control tube, as indicated by the milliammeter. Be sure that the receiver has been accurately tuned first without THe A.F.C., or improper adjustment may result, whereby the frequency is automatically detuned instead of tuned. When this condition of no change in cathode current is obtained, it is indicated that no control voltage is being generated at exact resonance, which is the desired condition. If now the receiver is slightly detuned either above or below resonance, the cathode current will either increase or decrease above its normal value with the.A.F.C. OFF, or no signal fed into the antenna. The voltage thus generated as indicated by this change in current serves to shift the frequency of the oscillator in the proper direction so as to automatically retune the oscillator to the exact frequency required to bring in the desired station with maximum clarity and a minimum of noise.

NOTE - IN ALLIGNING THE BROADCAST BAND (1500 KC AND 600 KC) THE A.F.C. MUST BE OFF.

MODEL 1604 ONLY

300 KC. ADJUSTMENT - The band selector switch is set in position for operation on band no. 4. The receiver and generator are both tuned to 300 kc. and the procedure outlined above is repeated.

The signal generator is set at 150 kc. and the signal is tuned in on the dial. The long wave padder condenser is adjusted for maximum response while the gang tuning condenser is rocked slightly to the right and left. The 300 kc. adjustment should then be rechecked.

FOR AUTOMATIC TUNING-DIAL DATA SEE INDEX

MODELS 1603-1604

16 TUBE 3 (or 4) BAND A.C.-D.C. SUPERHETERODYNE RECEIVER

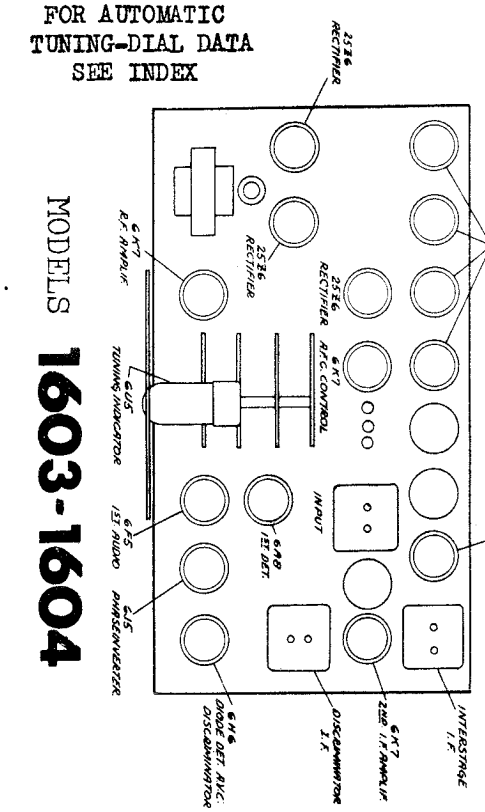

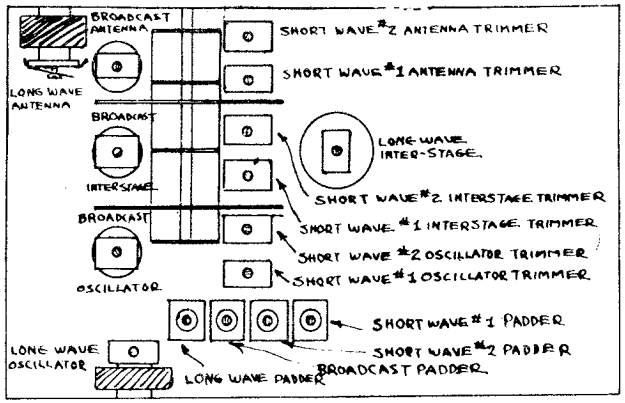

NOTE: LONG WAVE COILS & PADDERS USED ONLY ON MODEL 1604

©John F. Rider, Publisher

©John F. Rider, Publisher

MODELS 3012T, 3012L, 3012-3 Console; 3012-P6, 3012-P7 Combinations.
4012ET, 4012EL, 4012E-3 Console; 4012E-P6, 4012E-P7 Combinations

CURRENT: This receiver operates on AC (Alternating Current) only, on frequencies from 50 to 60 cycles.

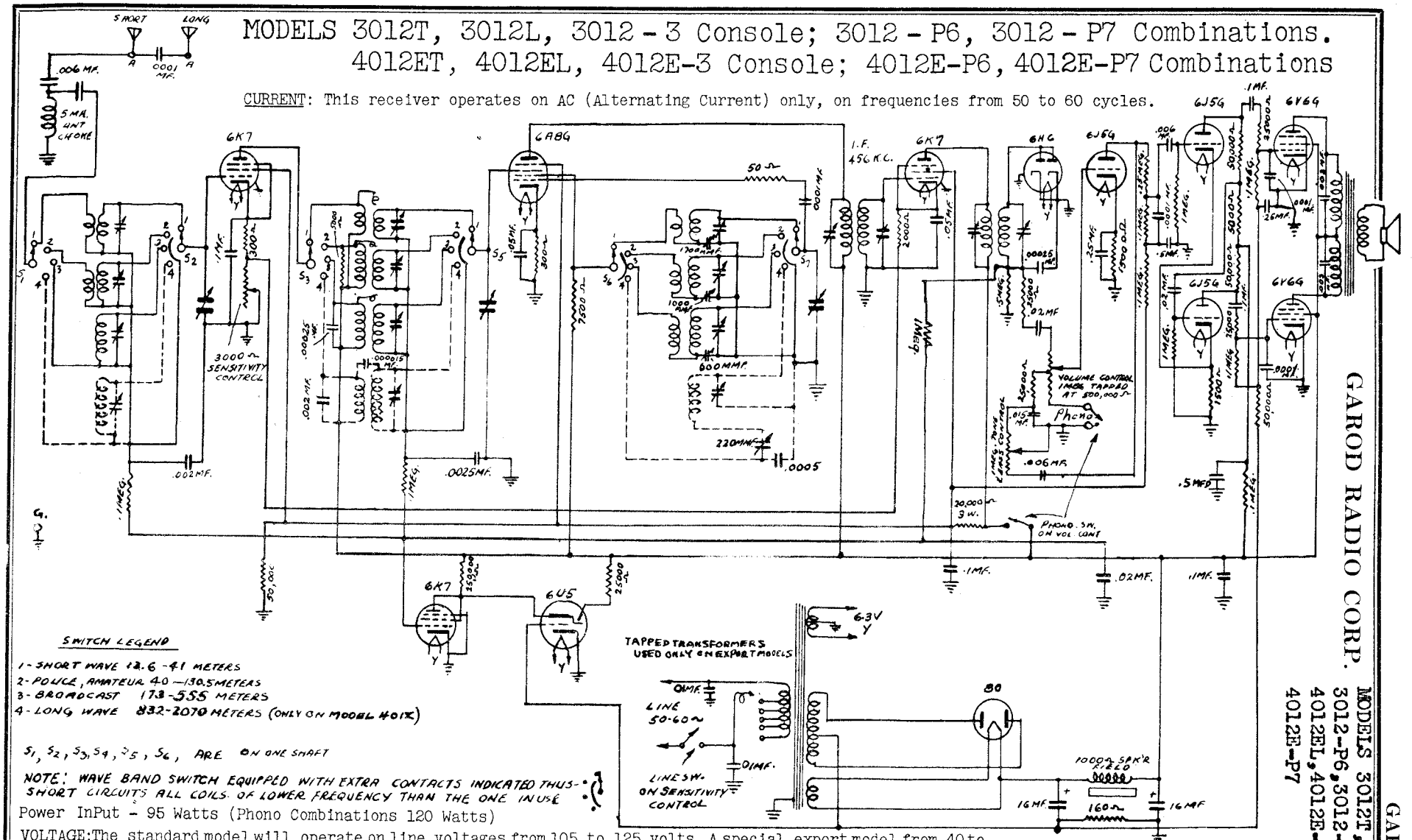

SWITCH LEGEND

1 - SHORT WAVE 12.6 - 41 METERS
2 - POLICE, AMATEUR 40 — 130.5 METERS
3 - BROADCAST 173 - 555 METERS
4 - LONG WAVE 832 - 2070 METERS (ONLY ON MODEL 4012)

$S_1, S_2, S_3, S_4, S_5, S_6$, ARE ON ONE SHAFT

NOTE: WAVE BAND SWITCH EQUIPPED WITH EXTRA CONTACTS INDICATED THUS- SHORT CIRCUITS ALL COILS OF LOWER FREQUENCY THAN THE ONE IN USE

Power InPut - 95 Watts (Phono Combinations 120 Watts)

VOLTAGE: The standard model will operate on line voltages from 105 to 125 volts. A special export model from 40 to 60 cycles and higher voltages is available. This model is equipped with a universal Transformer, with five taps marked as follows: 115, 135, 150, 230, 250.

IF PEAK 456KC

BAND	FREQUENCY RANGES	
S.W.-1	7.3 to 22 Megacycles	13.6 to 41 Meters
S.W.-2	2.3 to 7.5 " "	40.0 to 130.5 "
BROADCAST	540 to 1735 K.C.	173 to 555 "
Long Wave	145 to 360 K.C.	832 to 2070 "

SENSITIVITY-NOISE REDUCING CONTROL — WAVE-BAND SWITCH — TUNING — TONE CONTROL & LINE SWITCH — VOLUME CONTROL & PHONO SWITCH

GAROD RADIO CORP. MODELS 3012T, 3012L, 3012-3
3012-P6, 3012-P7, 4012ET
4012EL, 4012E-3, 4012E-P6
4012E-P7
Schematic

MODELS 3012T,3012L,3012-3,3012-P6
3012-P7,4012ET,4012EL,4012E-3
4012E-P6,4012E-P7

GAROD RADIO CORP.

Socket,Trimmers,
Voltage,Alignment

MODELS
3012
4012

12 TUBE 3 (OR 4) BAND A.C. SUPERHETERODYNE RECEIVER

TUBE	FUNCTION	HEATER VOLTAGE	PLATE VOLTAGE	SCREEN GRID V.	CATHODE VOLTAGE	GRID
6K7	R.F. Amp.	6.3	245	100	2	-
6A8G	Converter	6.3	245	100	2.4	-
6K7	I.F. Amp.	6.3	245	100	7	-
6H6	Diode Det.	6.3	-	-	-	-
6J5G	1st Audio	6.3	25	-	2.	-
6J5G	Phase Inverter	6.3	60	-	2.1	-
6J5G	Driver	6.3	55	-	2.1	-
6K7	Indicator Control	6.3	20	20	0	4.1
6V6G (2)	Power Output	6.3	232	245	0	4.1
80	Rectifier	5.0	360 V-R.M.S.	-	-	-

ALIGNMENT PROCEDURE

It is important to remember that in receivers of this kind which are equipped with automatic volume control it is necessary to use the minimum possible signal from the signal generator; otherwise the A.V.C. action will tend to nullify the variations in output as the trimmers are adjusted.

I.F. ADJUSTMENT - The signal generator is set at 456 kc. and is connected to the grid of the first detector 6A8G. With the oscillator section of the tuning condenser short-circuited and the receiver volume control at its maximum position, the 1.f. trimmers are adjusted for maximum output. These trimmers may be found on the tops of the I.F. Transformers.

21 MEGACYCLE ADJUSTMENT - The high side of the signal generator is connected to the antenna lead of the receiver and the low side to the ground lead. The receiver and the signal are both tuned to a frequency of 21 mc. with the selector switch in position for short wave band no.1. The oscillator trimmer condenser is adjusted so that the 21 mc. signal is tuned in exactly at the 21 mc. calibration point, with the volume control on full and the signal generator adjusted for minimum input. The antenna preselector and interstage trimmers are then adjusted in the order named for maximum output. These trimmers are located as indicated in the bottom view of the chassis.

7.5 MEGACYCLE ADJUSTMENT - The signal generator is set at 7.5 megacycles and the signal tuned in on the dial. The short wave padding condenser is adjusted for maximum output, while the gang condenser is rocked slightly to the right and left. The 21 megacycle adjustment should then be rechecked.

7 MC. ADJUSTMENT - With the band selector switch in position for operation on short wave band no. 2. and the receiver and the signal generator both set at 7 mc. the procedure outlined above is repeated.

The signal generator is set at 2.4 mc. and the signal tuned in on the dial. The police band padder condenser is adjusted for maximum gain while the gang tuning condenser is rocked slightly to the right and left. The 7 mc. adjustment should then be rechecked.

1500 KC. ADJUSTMENT - The band selector switch is set in position for operation on the broadcast band. The receiver and signal generator are both set at 1500 kc. and the procedure outlined above is repeated.

The signal generator is set at 600 kc. and the signal tuned in on the dial. The broadcast padder condenser is adjusted for maximum response while the gang tuning condenser is rocked slightly to the right and left. The 1500 kc. adjustment should then be rechecked.

ON MODEL 4012 ONLY

300 KC. ADJUSTMENT - The band selector switch is set in position for operation on the long wave band. The receiver and generator are both tuned to 300 kc. and the procedure outlined above is repeated.

The signal generator is set at 150 kc. and the signal is tuned in on the dial. The long wave padder condenser is adjusted for maximum response while the gang tuning condenser is rocked slightly to the right and left. The 300 kc. adjustment should then be rechecked.

All D. C. voltages measured from socket terminal to ground. Sensitivity control turned up all the way (clockwise).
D.C. voltages measured with 250,000 Ohm meter for high voltages and 25,000 Ohms for voltages under 25.

Filament voltages are taken from filament prong to filament prong at tube socket and measured with a low impedance AC voltmeter.

NOTE: LONG WAVE COILS & PADDERS USED ONLY ON MODEL 1204 4012

©John F. Rider, Publisher

©John F. Rider, Publisher

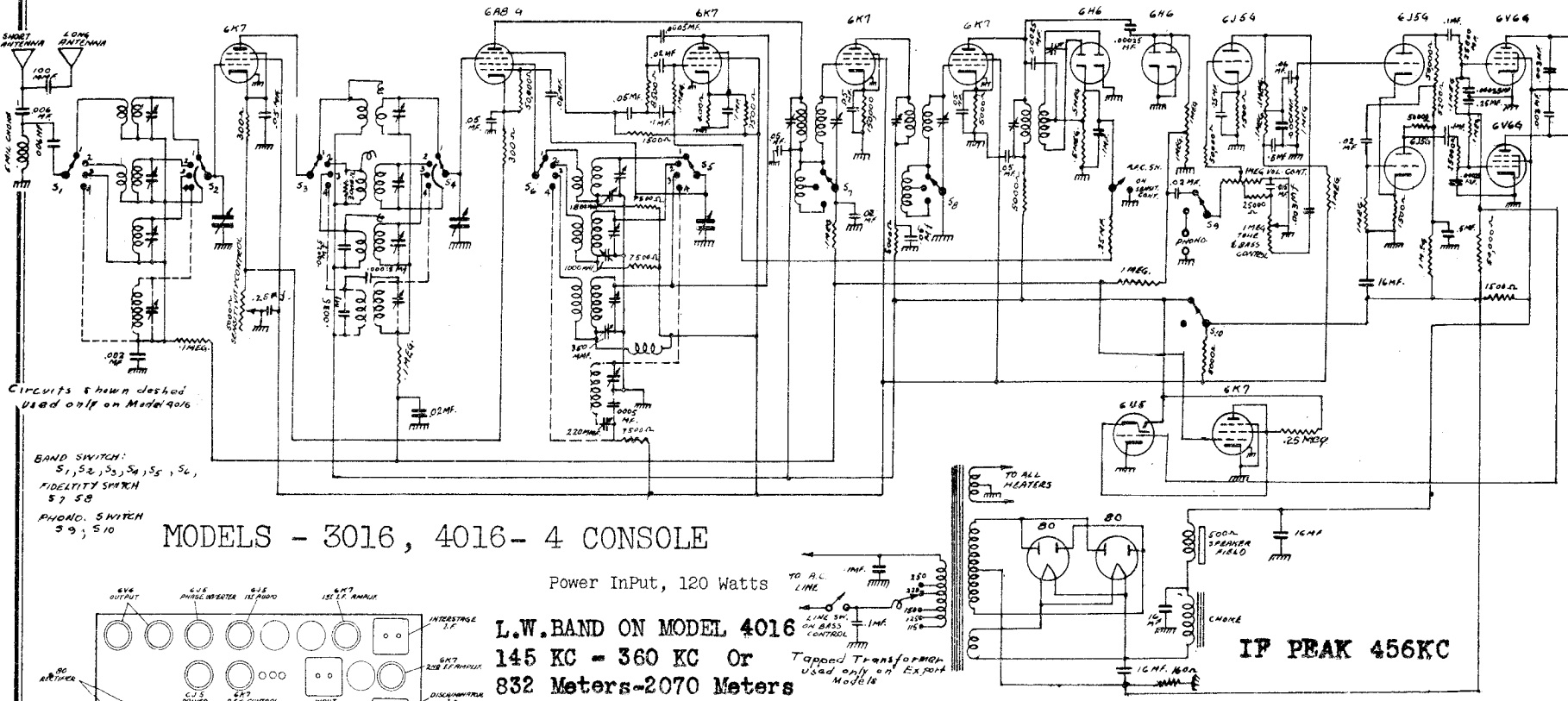

MODELS - 3016, 4016- 4 CONSOLE

Power InPut, 120 Watts

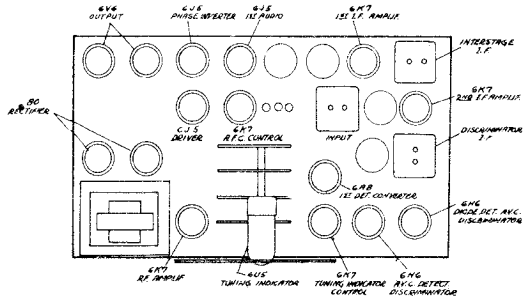

L.W. BAND ON MODEL 4016
145 KC - 360 KC Or
832 Meters-2070 Meters

BAND	DESIGNATION	KILOCYCLES or MEGACYLLES	METERS
Short Wave 1	Foreign & American Short Wave Airplanes	7.3 to 22	13.6 to 41
Short Wave 2	Police, Amateur Airplanes	2.3 to 7.5	40 to 130.5
Broad cast	Domestic Broadcast	540 to 1735	173 to 555

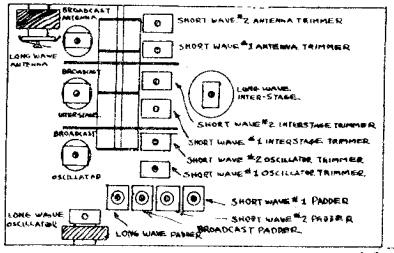

NOTE: LONG WAVE COILS & PADDERS USED ONLY ON MODEL 4016

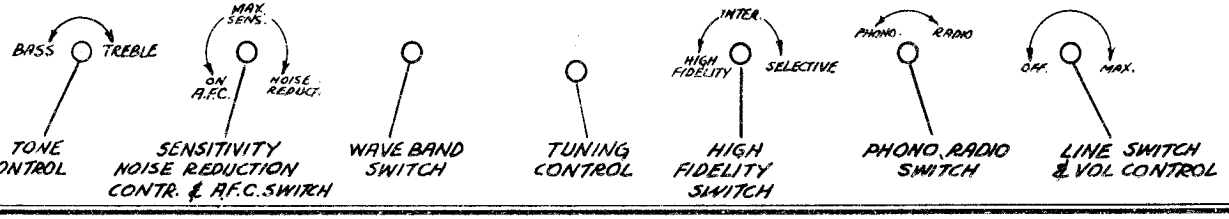

MODELS 3016,4016-4
Voltage,Alignment

GAROD RADIO CORP.

16 TUBE 3 (OR 4) BAND A.C.
SUPERHETERODYNE RECEIVER

MODELS 3016-4016

FOR AUTOMATIC TUNING-DIAL DATA
SEE INDEX

MODEL 3016- 4016 VOLTAGE CHART

		PLATE	SCREEN	CATHODE	
6K7	R.F. Amp.	250	100	3	
6A8G	Converter	100	100	3	
6K7	A.F.C. Control Tube	100	100	6.5	100 OSC. PLATE
6K7	1st I.F.	235	100	14	
6K7	2nd I.F.	235	100	5	
6H6	Discriminator	0		0	
6H6	Detector	0		0	
6J5G	1st Audio	30		3	
6J5G	2nd Audio	60		3	
6J5G	Phase Inverter	60		3	
2-6V6G	Output	295	300	Grid 20 420	
2-80	Rectifier				
6K7	Tuning Indicator Control	35	35		

Wave band switch in Broadcast position
Sensitivity control in counter-clockwise position
No signal.

All D.C. voltages measured from socket terminal to ground. Sensitivity control turned up all the way (clockwise).
D.C. voltages measured with 250,000 Ohm meter for high voltages and 25,000 Ohms for voltages under 25.

Filament voltages are taken from filament prong to filament prong at tube socket and measured with a low impedance AC voltmeter.

I.F. ADJUSTMENT - The signal generator is set at 456 kc. and is connected to the grid of the first detector 6A8G. With the oscillator section of the tuning condenser short-circuited and the receiver volume control at its maximum position, the i.f. trimmers are adjusted for maximum output. These trimmers may be found on the tops of the I.F. Transformers.

21 MEGACYCLE ADJUSTMENT - The high side of the signal generator is connected to the antenna lead of the receiver and the low side to the ground lead. The receiver and the signal are both tuned to a frequency of 21 mc. with the selector switch in position for short wave band no.1. The oscillator trimmer condenser is adjusted so that the 21 mc. signal is tuned in exactly at the 21 mc. calibration point, with the volume control on full and the signal generator adjusted for minimum input. The antenna preselector and interstage trimmers are then adjusted in the order named for maximum output. These trimmers are located as indicated in the bottom view of the chassis.

7.5 MEGACYCLE ADJUSTMENT - The signal generator is set at 7.5 megacycles and the signal tuned in on the dial. The short wave padding condenser is adjusted for maximum output, while the gang condenser is rocked slightly to the right and left. The 21 megacycle adjustment should then be rechecked.

7 MC. ADJUSTMENT - With the band selector switch in position for operation on short wave band no. 2. and the receiver and the signal generator both set at 7 mc. the procedure outlined above is repeated.

The signal generator is set at 2.4 mc. and the signal tuned in on the dial. The police band padder condenser is adjusted for maximum gain while the gang tuning condenser is rocked slightly to the right and left. The 7 mc. adjustment should then be rechecked.

1500 KC. ADJUSTMENT - The band selector switch is set in position for operation on the broadcast band. The receiver and signal generator are both set at 1500 kc. and the procedure outlined above is repeated.

The signal generator is set at 600 kc. and the signal tuned in on the dial. The broadcast padder condenser is adjusted for maximum response while the gang tuning condenser is rocked slightly to the right and left. The 1500 kc. adjustment should then be rechecked.

AUTOMATIC FREQUENCY CONTROL - Should it be found that after a station is tuned in accurately (in the selective position) as indicated by the cathode ray tube, that when the A.F.C. switch is turned "ON", the signal is detuned or a change observed in the tone of the receiver, it will be necessary to readjust the "Discriminator" transformer which controls this action. A low range (0-5 or 0-10V.) high resistance volt meter or preferably a microammeter is inserted in series with the diode load resistor at the grounded end, which will indicate a maximum when a signal is tuned to exact resonance. This 500,000 Ohms load resistor is located directly under the discriminator transformer. A 0-10 milliammeter is inserted in the cathode circuit of the A.F.C. control tube. An R.F. signal (any frequency in the Broadcast Band) is fed into the antenna and the receiver is tuned as accurately as possible to resonance (with the switch turned OFF). Now throw the secondary trimmer of the discriminator off resonance. Tune the primary for maximum output as indicated by the diode load meter. Turn the AFC switch "ON". Now tune the secondary trimmer, identified by a red paint mark, so that when the A.F.C. switch is turned from the ON to the OFF position and vice versa, no change takes place in the cathode, current of the A.F.C. control tube, as indicated by the milliammeter. Be sure that the receiver has been accurately tuned first without the A.F.C., or improper adjustment may result, whereby the frequency is automatically detuned instead of tuned. When this condition of no change in cathode current is obtained, it is indicated that no control voltage is being generated at exact resonance, which is the desired condition. If now the receiver is slightly detuned either above or below resonance, the cathode current will either increase or decrease above its normal value with the A.F.C. OFF, or no signal fed into the antenna. The voltage thus generated as indicated by this change in current serves to shift the frequency of the oscillator in the proper direction so as to automatically retune the oscillator to the exact frequency required to bring in the desired station with maximum clarity and a minimum of noise.

NOTE - IN ALLIGNING THE BROADCAST BAND (1500 KC AND 600 KC) THE A.F.C. MUST BE OFF

ON MODEL 4016 ONLY

300 KC. ADJUSTMENT - The band selector switch is set in position for operation on the long wave band. The receiver and generator are both tuned to 300 kc. and the procedure outlined above is repeated.

The signal generator is set at 150 kc. and the signal is tuned in on the dial. The long wave padder condenser is adjusted for maximum response while the gang tuning condenser is rocked slightly to the right and left. The 300 kc. adjustment should then be rechecked.

©John F. Rider, Publisher

©John F. Rider, Publisher

All voltages except filament, are measured from socket terminals to chassis and with a 1000 Ohms per volt voltmeter. The set must be in operation and the sensitivity control in its maximum clockwise position.

Filament voltages are taken from filament prong to filament prong at tube socket and measured with a low impedance AC voltmeter.

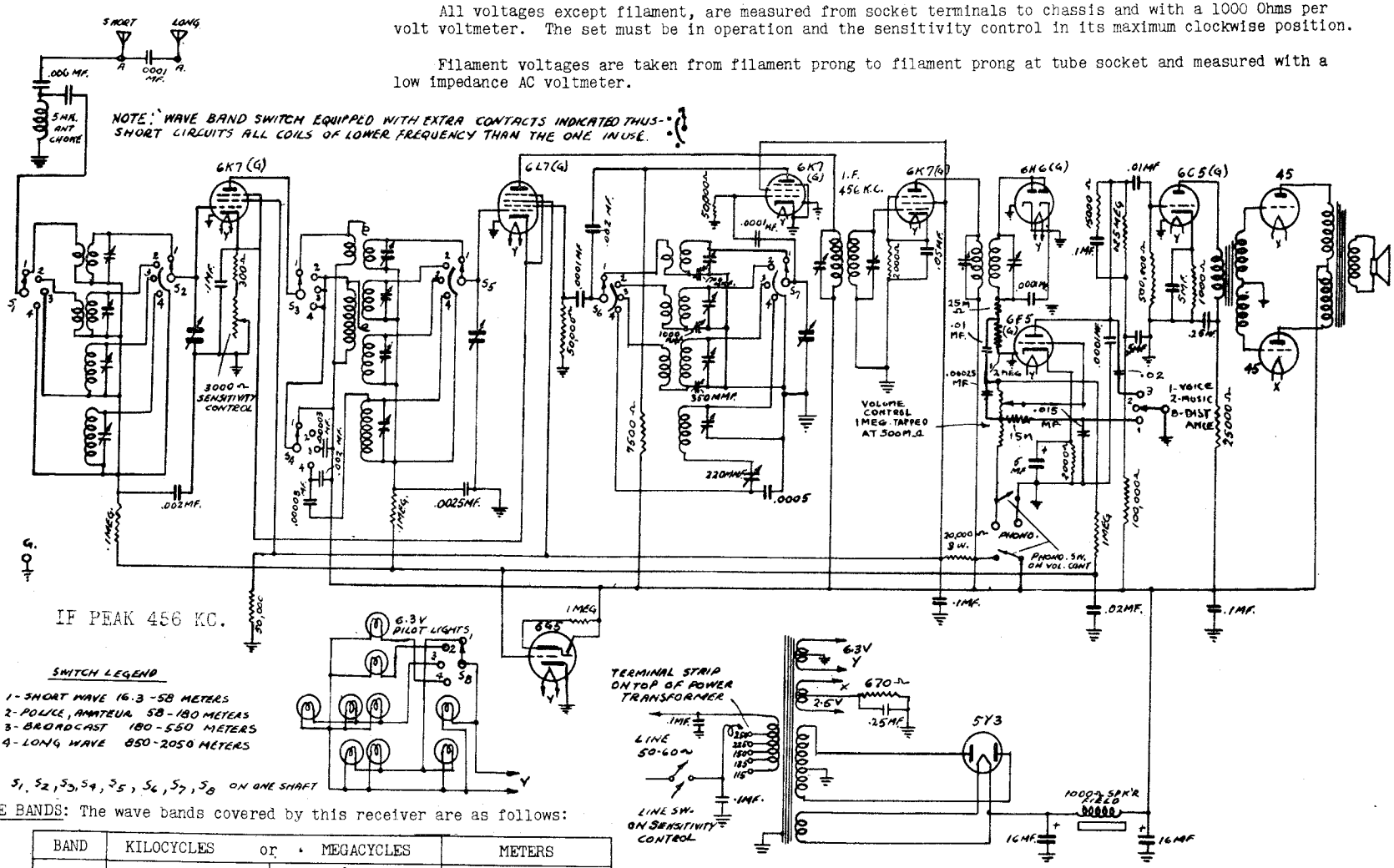

WAVE BANDS: The wave bands covered by this receiver are as follows:

BAND	KILOCYCLES	or • MEGACYCLES	METERS
1		5.65 to 18.5	16.2 to 53
2		1.75 to 5.7	52.6 to 173
3	550 to 1800		167 to 545
4	145 to 345		870 to 2070

TUBE	FUNCTION	HEATER	PLATE	SC. GR.	CATH	
					V	I
6K7 (G)	RF Amp.	6.3	275	90	2	9.0
6K7 (G)	Oscillator	6.3	240	90	0	8.0
6L7 (G)	Converter	6.3	275	90	2	5.0
6K7 (G)	1st IF	6.3	275	90	4	4.5
6H6 (G)	Diode	6.3	0		0	
6F5 (G)	1st Audio	6.3	90		1	.3
6C5 (G)	2nd Audio	6.3	200		8	3.0
45 (2)	Output	2.5	275		45	36.
5Y3	Rectifier	5.0			385	110.

MODELS 4110,4110E,4110KC
Socket,Trimmers,Alignment

GAROD RADIO CORP.

I.F. ADJUSTMENT - The signal generator is set at 456 kc. and is connected to the grid of the first detector (6A8). With the oscillator section of the tuning condenser short-circuited and the receiver volume control at its maximum position, the i.f. trimmers are adjusted for maximum output. These trimmers may be found on the tops of the I.F. Transformers.

18 MEGACYCLE ADJUSTMENT - The high side of the signal generator is connected to the antenna lead of the receiver and the low side to the ground lead. The receiver and the signal are both tuned to a frequency of 18 mc. with the selector switch in position for band no. 1. The oscillator trimmer condenser is adjusted so that the 18 mc. signal is tuned in exactly at the 18 mc. calibration point, with the volume control on full and the signal generator adjusted for minimum input. The antenna preselector and interstage trimmers are then adjusted in the order named for maximum output. These trimmers are located as indicated in the bottom view of the chassis.

6 MEGACYCLE ADJUSTMENT - The signal generator is set at 6 megacycle and the signal tuned in on the dial. The short wave padding condenser is adjusted for maximum output, while the gang condenser is rocked slightly to the right and left. The 18 megacycle adjustment should then be rechecked.

5 MC. ADJUSTMENT - With the band selector switch in position for operation on band no. 2. and the receiver and signal generator both set at 5 mc. the procedure outlined above is repeated.
The signal generator is set at 1.8 mc. and the signal tuned in on the dial. The police band padder condenser is adjusted for maximum gain while the gang tuning condenser is rocked slightly to the right and left. The 5 mc. adjustment should then be rechecked.

1500 KC. ADJUSTMENT - The band selector switch is set in position for operation on the no. 3. band. The receiver and signal generator are both set at 1500 kc. and the procedure outlined above is repeated.

The signal generator is set at 600 kc. and the signal tuned in on the dial. The broadcast padder condenser is adjusted for maximum response while the gang tuning condenser is rocked slightly to the right and left. The 1500 kc. adjustment should then be rechecked.

300 KC. ADJUSTMENT - The band selector switch is set in position for operation on band no. 4. The receiver and generator are both tuned to 300 kc. and the procedure outlined above is repeated.

The signal generator is set at 150 kc. and the signal is tuned in on the dial. The long wave padder condenser is adjusted for maximum response while the gang tuning condenser is rocked slightly to the right and left. The 300 kc. adjustment should then be rechecked.

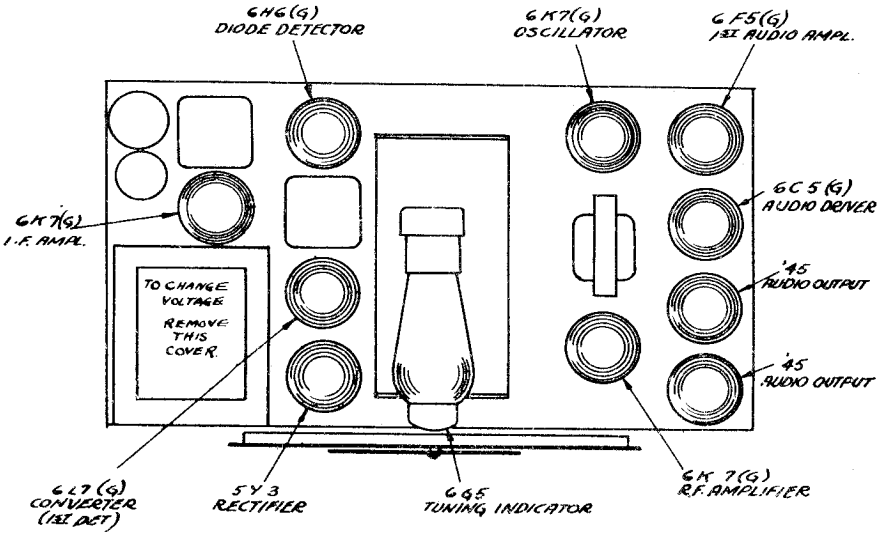

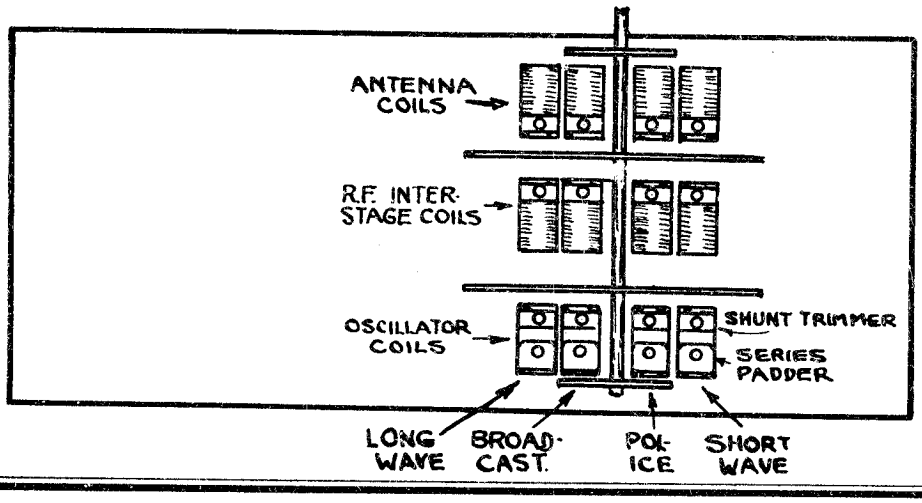

©John F. Rider, Publisher

GAROD RADIO CORP.

MODEL 5140
Schematic
Voltage

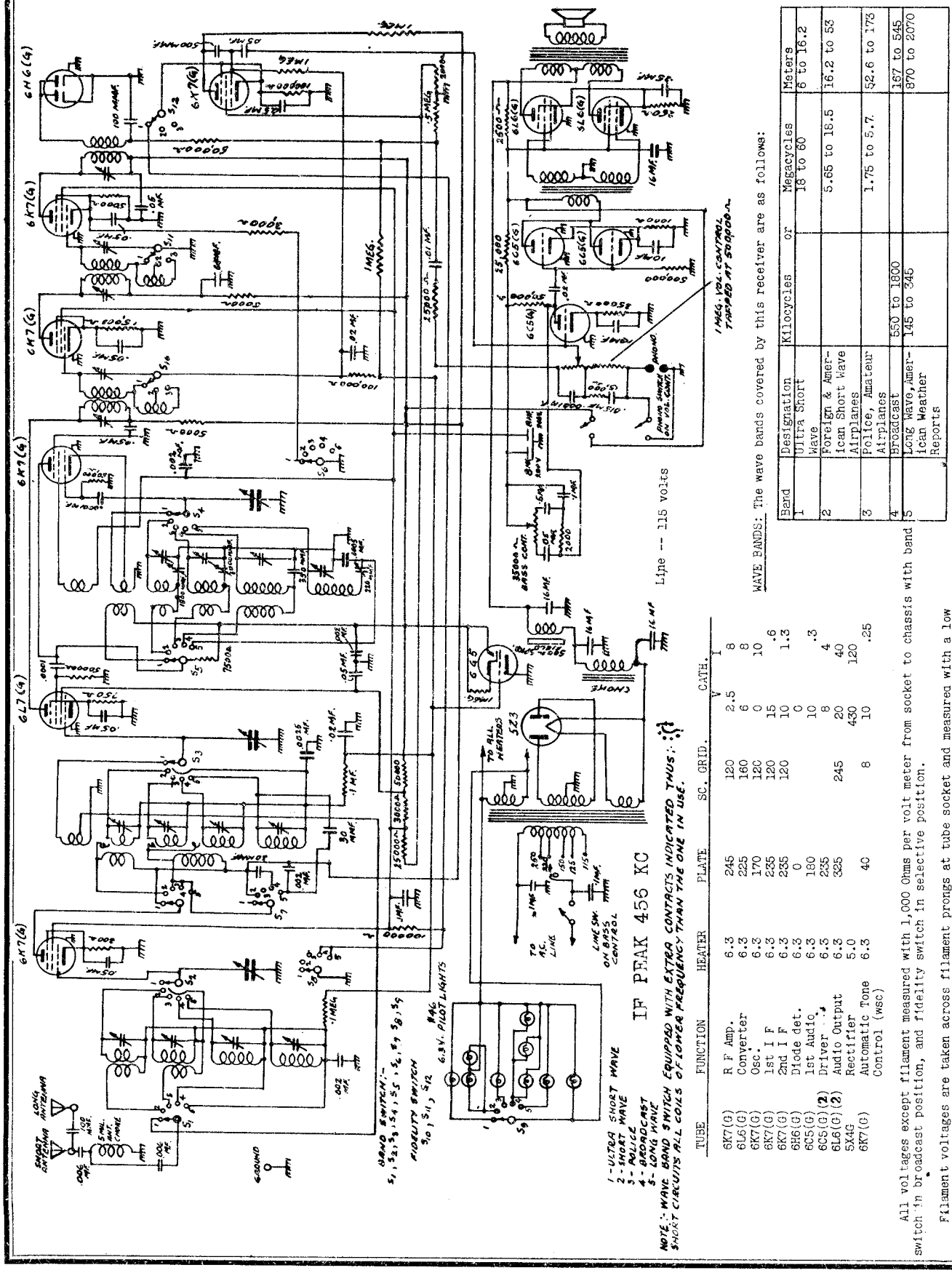

WAVE BANDS: The wave bands covered by this receiver are as follows:

Band	Designation	Kilocycles	or	Megacycles	Meters
1	Ultra Short Wave			18 to 80	6 to 16.2
2	Foreign & American Short Wave Airplanes			5.65 to 18.5	16.2 to 53
3	Police, Amateur Airplanes			1.75 to 5.7	52.6 to 175
4	Broadcast	550 to 1800			167 to 545
5	Long Wave, American Weather Reports	145 to 345			870 to 2070

TUBE	FUNCTION	HEATER	PLATE	SC. GRID.	CATH. V	CATH. I
6K7(G)	R F Amp.	6.3	245	120	2.5	8
6L6(G)	Converter	6.3	225	160	6	8
6K7(G)	Osc.	6.3	170	120	0	10
6K7(G)	1st I F	6.3	235	120	15	.6
6K7(G)	2nd I F	6.3	235	120	10	1.3
6H6(G)	Diode det.	6.3	0		0	
6C5(G)	1st Audio	6.3	180		10	.3
6C5(G)(2)	Driver	6.3	235		8	4
6L6(G)(2)	Audio Output	6.3	325	245	20	40
5X4G	Rectifier	5.0			430	120
6K7(G)	Automatic Tone Control (wsc)	6.3	40	8	10	.25

All voltages except filament measured with 1,000 Ohms per volt meter from socket to chassis with band switch in broadcast position, and fidelity switch in selective position.

Filament voltages are taken across filament prongs at tube socket and measured with a low impedance AC voltmeter.

©John F. Rider, Publisher

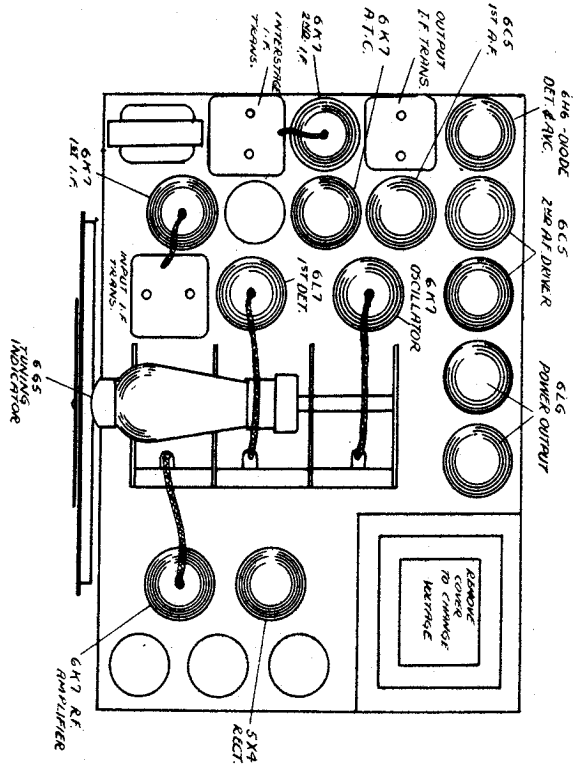

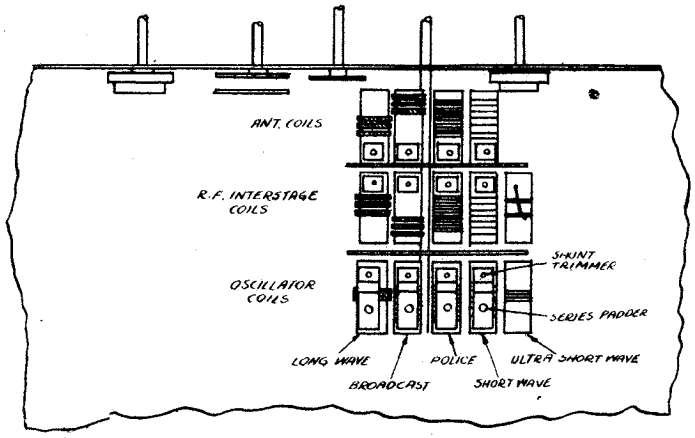

SERVICE NOTES FOR THE MODEL 5140
14 TUBE 5 BAND A.C. SUPERHETERODYNE RECEIVER
ALIGNMENT PROCEDURE

CURRENT: This receiver operates on AC (Alternating Current) only, on frequencies from 50 to 60 cycles.

VOLTAGE: Any line voltage from 105 to 260 volts may be used. This model is equipped with a universal Transformer, with five taps marked as follows:- 110, 135, 150, 220, 250. Access to this tap changer is obtained by lifting off the black cover on top of the transformer. The lug attached to the flexible lead is then moved to the point which corresponds most nearly to the line voltage available. The cover is then snapped back into place. Unles otherwise specified, the receiver is always connected to the 110 volt tap (suitable for 105 to 125 volts). Before inserting the line plug, be sure to ascertain what the line voltage is and connect to the correct tap.

Realignment of this receiver should not be attempted unless all other possible causes of faulty operation have been thoroughly investigated. An accurately calibrated signal generator which will cover the necessary wave-bands and an output meter for indicating the effect of adjustments are required.

It is important to remember that in receivers of this kind which are equipped with automatic volume control it is necessary to use the minimum possible signal from the signal generator; otherwise the avc action will tend to nullify the variations in output as the trimmers are adjusted. A surer method is to make the avc tube inoperative. This may be done by shorting return of RF trimmers to ground.

I.F. ADJUSTMENT: The signal generator is set at 456 kc. and is connected to the grid of the first detector (6L7). With the oscillator section of the tuning condenser short-circuited and the receiver volume control at its maximum position, the i.f. trimmers are adjusted for maximum output. These trimmers may be found on the tops of the I.F. transformers.

18 MEGACYCLE ADJUSTMENT: The high side of the signal generator is connected to the antenna lead of the receiver and the low side to the ground lead. The receiver and the signal are both tuned to a frequency of 18 mc. with the selector switch in position for band no. 2 (Short Wave). The oscillator trimmer condenser is adjusted so that the 18 mc. signal is tuned in exactly at the 18 mc. calibration point, with the volume control on full and the signal generator adjusted for minimum input. The antenna preselector and interstage trimmers are then adjusted in the order named for maximum output. These trimmers are located as indicated in the bottom view of the chassis.

6 MEGACYCLE ADJUSTMENT: The signal generator is set at 6 megacycles and the signal tuned in on the dial. The Short Wave padding condenser is adjusted for maximum gain while the gang tuning condenser is rocked slightly to the right and left.

5 MC. ADJUSTMENT: With the band selector switch in position for operation on band no. 3 (Police) and the receiver and signal generator both set at 5 mc. the procedure outlined above is repeated.

The signal generator is set at 1.8 mc. and the signal tuned in on the dial. The padder condenser for this band is adjusted for maximum gain while the gang tuning condenser is rocked slightly to the right and left. The 5 mc. adjustment should then be rechecked.

1500 KC. ADJUSTMENT: The band selector switch is set in position for operation on the no. 4 band. (Broadcast). The receiver and signal generator are both set at 1500 kc. and the procedure outlined above is repeated.

The signal generator is set at 600 kc. and the signal tuned in on the dial. The padder condenser for this band is adjusted for maximum response while the gang tuning condenser is rocked slightly to the right and left. The 1500 kc. adjustment should then be rechecked.

300 KC. ADJUSTMENT: The band selector switch is set in position for operation on band no. 5. The receiver and generator are both tuned to 300 kc. and the procedure outlined above is repeated.

The signal generator is set at 150 kc. and the signal is tuned in on the dial. The Long Wave padder condenser is adjusted for maximum response while the gang tuning condenser is rocked slightly to the right and left. The 300 kc. adjustment should then be rechecked.

©John F. Rider, Publisher

©John F. Rider, Publisher

MODEL F-40

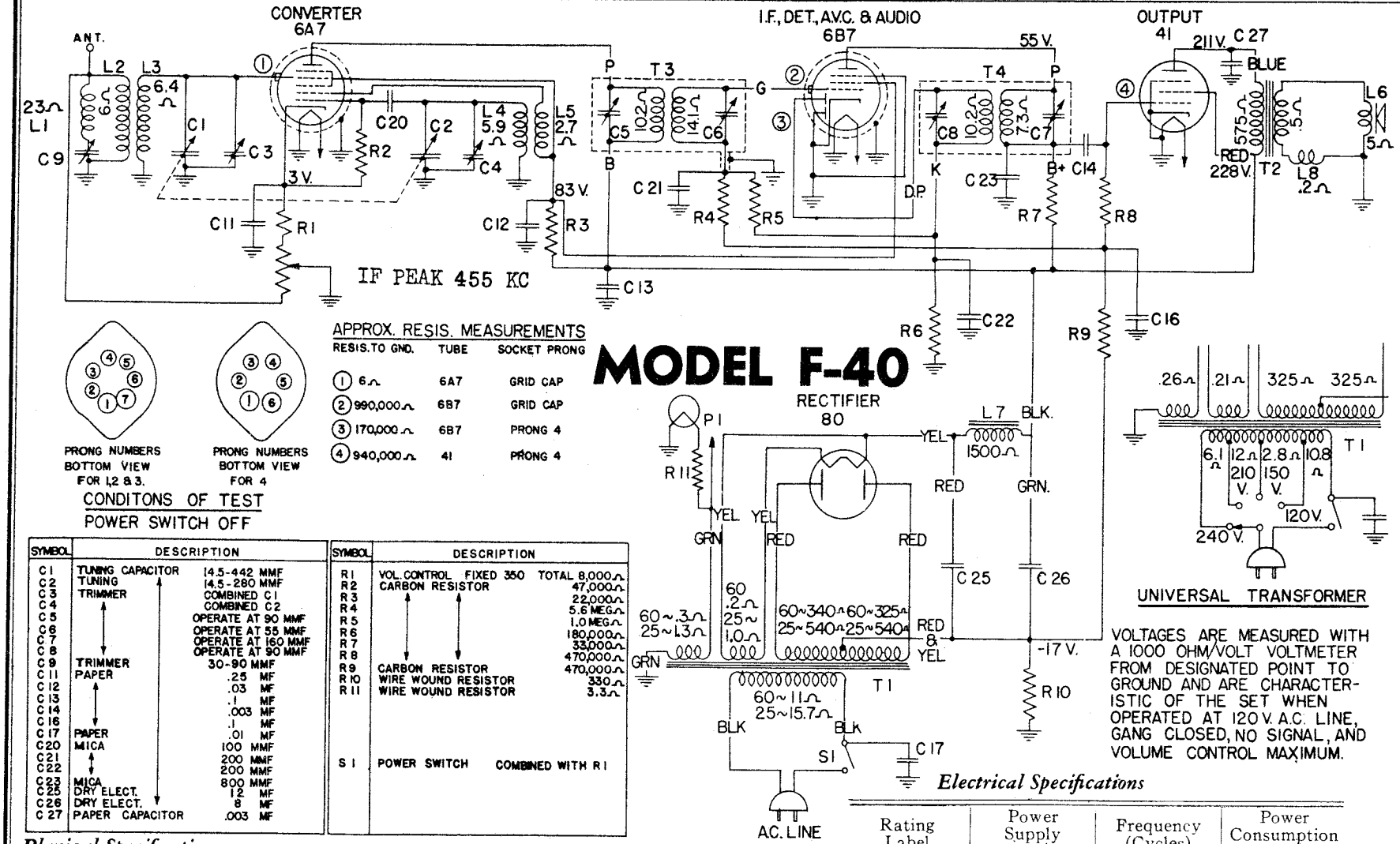

PRONG NUMBERS BOTTOM VIEW FOR 1,2 & 3.

PRONG NUMBERS BOTTOM VIEW FOR 4

APPROX. RESIS. MEASUREMENTS

	RESIS. TO GND.	TUBE	SOCKET PRONG
1	6 Ω	6A7	GRID CAP
2	990,000 Ω	6B7	GRID CAP
3	170,000 Ω	6B7	PRONG 4
4	940,000 Ω	41	PRONG 4

CONDITONS OF TEST
POWER SWITCH OFF

SYMBOL	DESCRIPTION	
C1	TUNING CAPACITOR	14.5-442 MMF
C2	TUNING	14.5-280 MMF
C3	TRIMMER	COMBINED C1
C4		COMBINED C2
C5		OPERATE AT 90 MMF
C6		OPERATE AT 55 MMF
C7		OPERATE AT 160 MMF
C8		OPERATE AT 90 MMF
C9	TRIMMER	30-90 MMF
C11	PAPER	.25 MF
C12		.03 MF
C13		.1 MF
C14		.003 MF
C16		.1 MF
C17	PAPER	.01 MF
C20	MICA	100 MMF
C21		200 MMF
C22		200 MMF
C23	MICA	800 MMF
C25	DRY ELECT.	12 MF
C26	DRY ELECT.	8 MF
C27	PAPER CAPACITOR	.003 MF

SYMBOL	DESCRIPTION	
R1	VOL. CONTROL FIXED 350	TOTAL 8,000 Ω
R2	CARBON RESISTOR	47,000 Ω
R3		22,000 Ω
R4		5.6 MEG. Ω
R5		1.0 MEG. Ω
R6		180,000 Ω
R7		33,000 Ω
R8		470,000 Ω
R9	CARBON RESISTOR	470,000 Ω
R10	WIRE WOUND RESISTOR	330 Ω
R11	WIRE WOUND RESISTOR	3.3 Ω
S1	POWER SWITCH	COMBINED WITH R1

VOLTAGES ARE MEASURED WITH A 1000 OHM/VOLT VOLTMETER FROM DESIGNATED POINT TO GROUND AND ARE CHARACTERISTIC OF THE SET WHEN OPERATED AT 120 V. A.C. LINE, GANG CLOSED, NO SIGNAL, AND VOLUME CONTROL MAXIMUM.

Physical Specifications

Model F-40
Height ..... 7¾ inches
Width ..... 10¼ inches
Depth ..... 7¾ inches
Weight packed ..... 17 lbs

Tuning Control Drive Ratio 1:1

Tuning Frequency Range

Band "B" ..... 540–1800 kc.

Intermediate Frequency .... 455 kc.

Electrical Power Output

Undistorted ..... 1.5 watts
Maximum ..... 3.0 watts

Loud Speaker—Electrodynamic

Cone Diameter 6½-inch
Voice Coil Impedance 5.5 ohms at 400 cycles

Electrical Specifications

Rating Label	Power Supply (Volts)	Frequency (Cycles)	Power Consumption (Watts)
A	115–125	50–60	60
C	115–125	25–60	65
V	115–155 and 190–250	50–60	65

NOTE: Rating "V" receivers may be used on 40-cycle circuits provided the voltage does not exceed 110 volts on the 115–125 volt tap or 200 volts on the 190–220 volt tap.

©John F. Rider, Publisher

GENERAL ELECTRIC

SERVICE NOTES RFS-40

Tubes

Converter	6A7 Pentagrid Converter
I.F. amplifier, diode det. and 1st audio	6B7 Duplex Diode Pentode
Output	41 Power Amplifier Pentode
Rectifier	80 Full-wave Rectifier
Pilot Lamp	Mazda No. 46

GENERAL INFORMATION

This compact, single band receiver employs four Pre-tested General Electric tubes described above in a highly efficient superheterodyne circuit which includes a single stage of I.F., partial automatic volume control, wave trap, and pentode power output.

Description of Circuit

The signal from the antenna is applied to the control grid of the 6A7 through the R.F. transformer L2 and L3, the secondary of which is tuned by the rear section of the gang condenser. The 6A7 pentagrid converter tube is employed as a combination first detector and oscillator which converts the incoming signal to 455 kc. The intermediate frequency is transferred to the next tube by the 1st I.F. transformer T-3. The second tube, 6B7, performs the triple function of I.F. amplifier, detector and AVC, and audio amplifier. This is accomplished by inserting the 455 kc. signal from T3 into the grid circuit of the pentode section of the 6B7. After amplification at I.F. frequency, the signal is coupled through the I.F. transformer T-4 to the diode section of the same tube where it is rectified and the AVC voltage developed across R6. This AVC is in turn applied through R5 to the grid of the 6B7, causing a control of the amplification dependent upon the strength of the carrier. The audio voltage developed across R6 is fed through R5 and through the secondary of T-3 to the grid of the 6B7.

After amplification in the 6B7 this audio frequency is taken off of the plate load, R-7, through the coupling capacitor C-14, and thence to the grid of the 41 pentode power output tube.

Volume is controlled by the variable potentiometer R-1 in the cathode circuit of the 6A7 tube. This changes the self-bias on this tube and thereby changes the gain of the input tube. This same control functions to gradually short the antenna to ground as volume is decreased.

Plate and grid bias voltages for all tubes are supplied by the power supply system employing an 80 type full-wave rectifier tube.

ALIGNMENT PROCEDURE

I.F.	Broadcast	Broadcast
455 kc.	1830 kc.	1500 kc.

In order to align this receiver properly, it is necessary to have available:

1. A modulated test oscillator capable of producing the above alignment frequencies.
2. An output indicator, such as a high resistance A-C voltmeter with a maximum scale reading of 3 to 5 volts.
3. An alignment tool consisting of an insulating shaft with a small screw driver blade.

The location of all alignment trimmers are shown in Fig. 2.

I.F. Alignment

With gang condenser plates closed, turn the volume control to maximum (extreme clockwise position). Short circuit the antenna and ground leads.

Connect the test oscillator output between the chassis and the control grid of the 6A7 tube. A .05 mfd. capacitor should be used in series with the signal generator lead to the control grid. Connect the output meter across the voice coil of the speaker. Set the test oscillator to 455 kc. and adjust the oscillator output until a small deflection is noted on the output meter.

The four I.F. trimmers, see Fig. 2, are adjusted in the following sequence:

1. Secondary trimmer of 2nd I.F. transformer
2. Primary trimmer of 2nd I.F. transformer
3. Secondary trimmer of 1st I.F. transformer
4. Primary trimmer of 1st I.F. transformer

For a final check, the above adjustments should be repeated, keeping the test oscillator output at a low level.

I.F. Wave Trap Alignment

After completion of the I.F. alignment with the test oscillator still set at 455 kc. point, apply this frequency to the antenna lead of the receiver through a dummy antenna. This dummy antenna consists of a 400 ohm resistor in series with a 250 mmfd. capacitor and should be connected in series between the test oscillator output and the receiver antenna lead. With the 455 kc. signal applied to the receiver antenna lead, adjust the I.F. wave trap trimmer (C-9) for a minimum output indication.

R.F. Alignment

Remove the chassis. Connect the signal generator to the antenna and ground leads of the chassis through a dummy antenna consisting of a 400 ohm resistor in series with a 250 mmf. capacitor. Connect the output indicator across the voice coil of the speaker. With the gang condenser set to the minimum capacity position, i.e., plates fully open, peak the oscillator trimmer C-4 (front section) for maximum output with the signal generator set at the 1830 kc. point. Now reduce the signal generator frequency to 1500 kc. and tune in carefully this new frequency by means of the gang condenser. Now peak the antenna trimmer (C-3) (rear section) for a maximum output. After replacing the chassis in the cabinet, set the pointer by turning the station selector to the extreme clockwise position. Grasp the dial pointer and turn clockwise until the long end is opposite the last mark beyond 160.

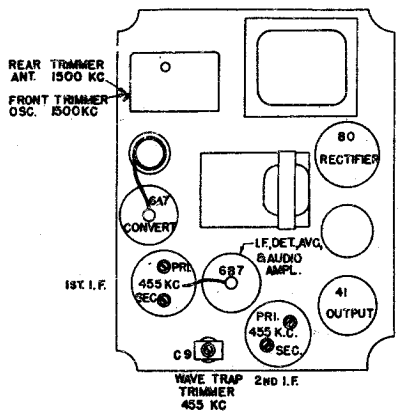

Fig. 2. Trimmer Location

REPLACEMENT PARTS LIST MODEL F-40

Stock No.	Description	List Price
	CHASSIS ASSEMBLY	
RB-070	BOARD—Terminal board (3 terminals)	$0.10
*RC-015	CAPACITOR—.003 Mfd., 400 V. paper (C-14)	.25
RC-055	CAPACITOR—.003 Mfd., 600 V. paper (C-15)	.25
*RC-083	CAPACITOR—.03 Mfd., 400 V. paper (C-12)	.25
*RC-123	CAPACITOR—.1 Mfd., 400 V. paper (C-13, C-16)	.35
RC-152	CAPACITOR—.25 Mfd., 400 V. paper (C-11)	.40
*RC-234	CAPACITOR—100 Mmf., mica (C-20)	.25
RC-252	CAPACITOR—200 Mmf., mica (C-21, C-22)	.80
RC-310	CAPACITOR—800 Mmf., mica (C-23)	.25
RC-585	CAPACITOR—12 Mfd., 450 V.; 8 Mfd., 450 V. dry electrolytic (C-25, C-26)	1.50
RC-644	CAPACITOR—Double trimmer, 2nd I.F. transformer (C-7, C-8)	.40
RC-669	CAPACITOR—Double trimmer, 1st I.F. transformer (C-5, C-6)	.30
RC-723	CONDENSER—2-gang tuning condenser and trimmers (C-1, C-2, C-3, C-4)	2.60
*RC-756	CAPACITOR—.01 Mfd., 200 V. paper (C-17)	.25
RC-1969	CUSHION—Cushion ring between speaker and cabinet	.15
*RC-863	CORD—Power cord	.65
RG-013	GRID CLIP—Control grid clip (Pkg. of 5)	.10
RK-024	KNOB—Volume or tone control knob (Ivory) (Pkg. of 5)	.40
RL-054	COIL—"B" Antenna Coil (L-2, L-3)	.70
PL-258	COIL—"B" Oscillator Coil (L-4, L-5)	.80
RP-754	POINTER—Pointer and two washers	.40
RQ-1299	RESISTOR—47,000 ohms, ½ watt carbon (R-2) (Pkg. of 5)	.70
RQ-1313	RESISTOR—180,000 ohms, ½ watt carbon (R-6) (Pkg. of 5)	.70
RQ-1323	RESISTOR—470,000 ohms, ½ watt carbon (R-8, R-9) (Pkg. of 5)	.70
RQ-1331	RESISTOR—1 megohm, ½ watt carbon (R-5) (Pkg. of 5)	.70
RQ-1349	RESISTOR—5.6 megohms, ½ watt carbon (R-4) (Pkg. of 5)	.70
RQ-1491	RESISTOR—22,000 ohms, 1 watt carbon (R-3)	.20
RQ-1495	RESISTOR—33,000 ohms, 1 watt carbon (R-7)	.20
RR-350	RESISTOR—3.3 ohms, 2 watt wire-wound (R-11)	.35
RR-1005	RESISTOR—330 ohms, 1 watt moulded (R-10)	.20
RS-179	SHIELD—Tube shield	.15
RS-180	SHIELD—2nd I.F. transformer shield	$0.20
RS-181	SHIELD—1st I.F. transformer shield	.20
RS-215	SOCKET—6-pin tube socket (Pkg. of 5)	.60
RS-217	SOCKET—4-prong tube socket (Pkg. of 5)	.50
RS-219	SOCKET—7-pin tube socket (Pkg. of 5)	.60
RS-423	SPRING—Knob spring (Pkg. of 10)	.25
RT-040	TRANSFORMER—Power transformer, 115-125 V., 60 cycles (T-1)	4.00
RT-041	TRANSFORMER—Power transformer, 115-125 V., 25 cycles (T-1)	6.60
RT-042	TRANSFORMER—Universal power transformer (T-1)	7.60
RT-249	TRANSFORMER—1st I.F. transformer (complete) (T-3)	1.60
RT-250	TRANSFORMER—2nd I.F. transformer (complete) (T-5)	1.45
RV-036	VOLUME CONTROL—Volume control and power switch (R-1, S-1)	.95
*RW-101	WASHER—Felt washer for knobs (Pkg. of 10)	.45
RW-405	WAVE TRAP—Wave trap coil and trimmer (L-1, C-9)	.75
RX-034	ASSEMBLY—Screws and washers for cabinet back	.05
RX-035	ASSEMBLY—Gang condenser mounting screws and cushions	.15
RX-036	ASSEMBLY—Chassis mounting screws and washer	.10
	DIAL MECHANISM	
RC-3018	CABLE—Condenser drive cord and spring	.80
RD-065	DIAL—Dial scale—Ivory	1.50
RL-920	LAMP—Pilot light 6.3 V., .25 amps. (Pkg. of 10)	.15
RP-752	PULLEY—Drive pulley on condenser	.10
RP-753	PULLEY—Drive pulley attached to pointer	.15
RR-916	REFLECTOR—Red pilot light reflector (Pkg. of 5)	.05
RS-216	SOCKET—Dial light socket assembly	
	SPEAKER ASSEMBLY	
RB-074	BOARD—Terminal board	.10
RC-923	CONE—6½-in. cone and voice coil assembly	.90
RC-1950	CLAMP—Voice coil spider clamp	.05
RS-065	SPEAKER—6½-in. speaker (complete)	6.10
RT-432	TRANSFORMER—Output transformer	1.25
	CABINET ASSEMBLY	
RN-005	NUT—Speed nut for mounting dial ring (Pkg. of 10)	.20
RS-909	SCREEN—Dial screen	.35
RZ-080	CABINET—Brown plastic (complete)	7.25

* Used on previous receivers.

Always Specify General Electric Pre-tested Tubes.

(Prices subject to change without notice)

SOCKET VOLTAGES

Tube No.	Plate to Ground Volts D-C	Screen-Grid to Ground Volts D-C	Cathode to Ground Volts D-C	Cathode Current M.A.	Heater Volts A-C
6A7 Oscillator	83	....	3	5.3	6.3
6A7 Converter	228	83			
6B7 Amplifier	55	83	.....	5.7	6.3
41 Output	211	228	.....	33	6.3
80 Rectifier	600/300 R.M.S.	....	300 D-C	45	5.0

Line voltage 120. 1000 ohms per-volt meter. No signal. Volume control set for maximum. Gang condenser plates closed.

GENERAL ELECTRIC CO.

GENERAL ELECTRIC CO.

MODELS G-50, G-55
Schematic, Coils

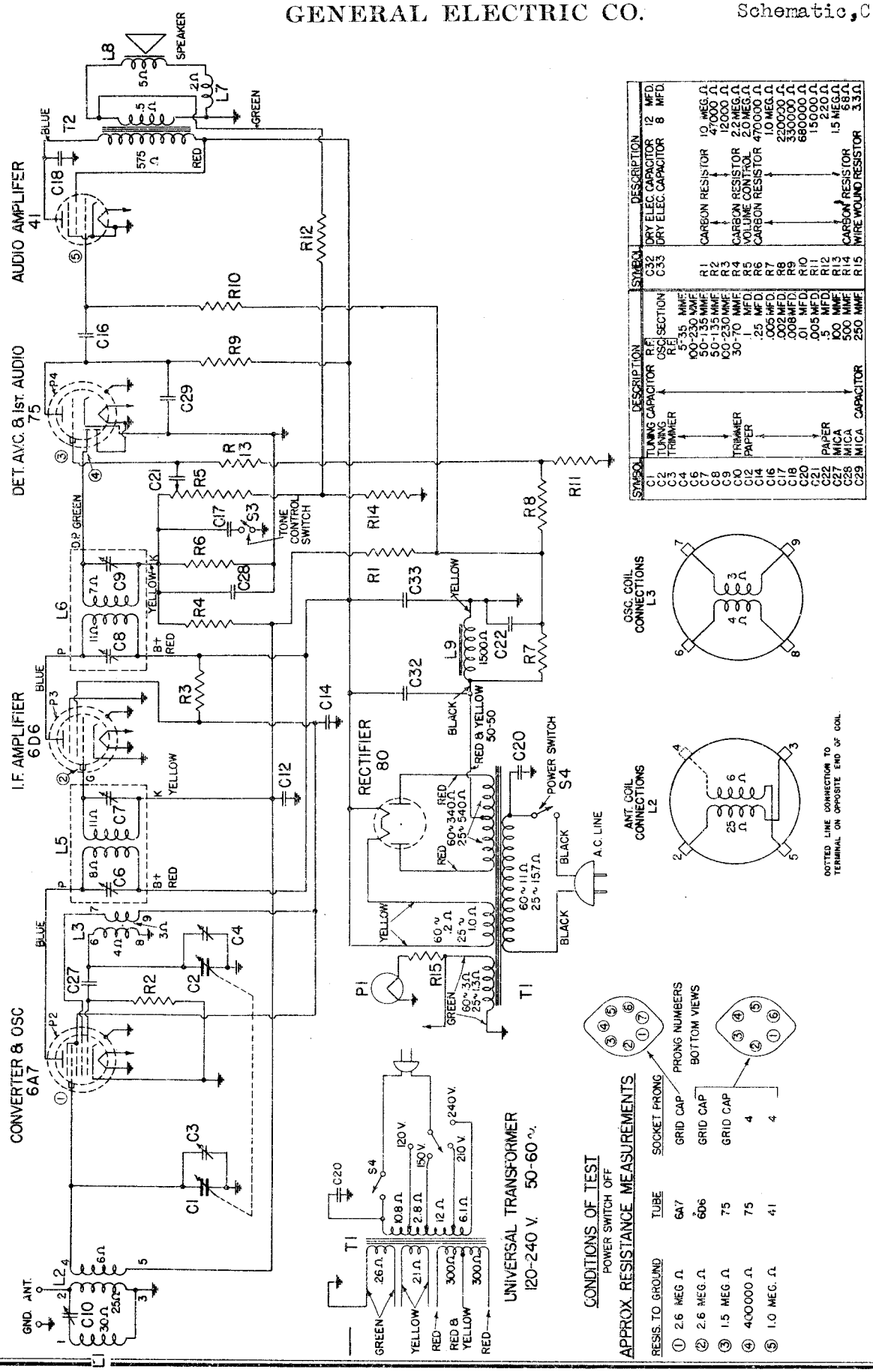

SYMBOL	DESCRIPTION	
C1	TUNING CAPACITOR	R.F.
C2	TUNING	OSC. SECTION
C3	TRIMMER	R.F.
C4		OSC.
C6	TRIMMER	
C7		
C8		
C9		
C10	TRIMMER	
C12	PAPER	
C14		
C16	MICA	
C17		
C18	MICA	
C20		
C21		
C22	PAPER	
C27	MICA	
C28	MICA	
C29	MICA	CAPACITOR

SYMBOL	DESCRIPTION	
C32	DRY ELEC. CAPACITOR	12 MFD
C33	DRY ELEC. CAPACITOR	8 MFD
R1	CARBON RESISTOR	10 MEG. Ω
R2		470000 Ω
R3		12000 Ω
R4	CARBON RESISTOR	2.2 MEG. Ω
R5	VOLUME CONTROL	2.0 MEG. Ω
R6	CARBON RESISTOR	470000 Ω
R7		1.0 MEG. Ω
R8		2200000 Ω
R9		3300000 Ω
R10		680000 Ω
R11		150000 Ω
R12		220 Ω
R13	CARBON RESISTOR	1.5 MEG. Ω
R14		6.8 Ω
R15	WIRE WOUND RESISTOR	3.3 Ω

RESIS. TO GROUND	TUBE	SOCKET PRONG
① 2.6 MEG Ω	6A7	GRID CAP
② 2.6 MEG. Ω	6D6	GRID CAP
③ 1.5 MEG Ω	75	GRID CAP
④ 400000 Ω	75	4
⑤ 1.0 MEG. Ω	41	4

Fig. 1. Schematic Diagram

©John F. Rider, Publisher

©John F. Rider, Publisher

SERVICE DATA

Physical Specifications

Model	G-50	G-55
Height	10⅛ in.	38 inches
Width	14¼ in.	24 inches
Depth	7¹¹⁄₁₆ in.	10⅝ inches
Weight Packed	22 lbs	46 lbs.

Tuning Control Drive Ratio ..... 2 to 1

Electrical Specifications

Rating Label	Power Supply (Volts)	Frequency (Cycles)	Power Consumption Watts
A	115–125	60	60
C	115–125	25–60	65
V	115–125 140–155 190–220 220–250	60	65

NOTE: Rating "V" receivers may be used on 40-cycle circuits provided the voltage does not exceed 110 volts on 110–125 volt tap or 200 volts on the 190–220 volt tap.

Tuning Frequency Range

Band "B" ..... 540 to 1800 kc.

Intermediate Frequency ..... 465 kc.

Electrical Power Output

Undistorted ..... 2.3 watts
Maximum ..... 3.5 watts

Tone Control ..... Two Position —Bass and Normal

Loud-speaker—Electrodynamic

Cone: Model G-50 ..... 6½ inches
Model G-55 ..... 8.0 inches
Speaker Impedance ..... 5 ohms at 400 cycles

Tubes

Oscillator & Converter .... 6A7 Pentagrid converter
I.F. Amplifier ..... 6D6 Triple-grid Super-control amplifier
Detector, AVC, 1st audio .. 75 Duplex Diode and high-gain Triode
Audio Amplifier ..... 41 Power Amplifier Pentode
Rectifier ..... 80 Full-wave rectifier
Indicator Lamp ..... MAZDA No. 46 Green

SOCKET VOLTAGES

	Tube No.	Plate to Ground Volts D.C.	Screen Grid to Ground Volts D.C.	Cathode to Ground Volts D.C.	Cathode Current M.A.	Heater Volts A.C.
6A7	Oscillator	105	105	0	14.8	6.3
	Converter	230				
6D6	1st I.F. Amp.	230	105	0	10	
75	Det A.V.C.					6.3
	1st audio	100 *		0	.16	6.3
41	Output	215	230	0	29	6.3
80	Rectifier	300/600 RMS		315 to B—	54	

A-c line voltage 120. No signal input 1000 ohms per-voltmeter.
Dial pointer at 530 kc.
* Measured on 500-volt scale.

GENERAL INFORMATION

The Models G-50 and G-55 employ five General Electric Pre-Tested Tubes as described above in a highly efficient superheterodyne circuit. A unique arrangement of push buttons mechanically connected to the dial drive mechanism allows instantaneous and accurate selection of eight different stations automatically.

Description of Electrical Circuit

A signal from the antenna is applied to the control grid of the 6A7 tube through the R.F. transformer, the secondary of which is tuned to the incoming signal by the rear section of the main tuning condenser. In the 6A7 tube the incoming signal is combined with the local oscillator signal which is 465 kc higher in frequency. A local signal is generated by the oscillator section of this tube and the proper frequency difference is maintained throughout the tuning range by the front section of the tuning condenser used in conjunction with the oscillator coil. The special cut rotor of the front condenser section makes the use of a padding capacitor unnecessary.

The combination of the oscillator and incoming signal frequencies produces an intermediate frequency of 465 kc. This signal is applied to an I.F. amplifier consisting of a 6D6 tube and two transformers, the primary and secondaries of each being tuned to 465 kc. The amplified I.F. frequency is applied to the diode section of the 75 and rectification causes a current to flow through resistor R-6. This in turn causes a voltage to be built up across R-6 and this voltage is applied to the 6A7 and 6D6 control grids and produces the right amount of AVC action. A variable resistor R-5 is shunted across R-6 and by varying the slider of R-5 the desired amount of audio voltage is impressed on the control grid of the 75 which in turn amplifies the audio frequency. The output of the 75 is resistance coupled to the grid of the 41 output tube. A transformer is used in the output of the 41 to properly match the speaker to the tube.

Tone control action is obtained by inserting or removing capacitor C-17 by means of switch S-3. Part of the output voltage is fed back through resistor R-12 to a point between R-5 and R-14 to improve the frequency response and reduce distortion.

Plate and grid voltages for all tubes are supplied by the power supply system employing an 80 full-wave rectifier tube. A suitable resistor network across the speaker field provides the proper bias for the tubes.

TOUCH TUNING MECHANISM

Automatic tuning of the receiver is accomplished by the mechanism as shown in Fig. 4. By pressing in a station button and rotating it to the lower part of the assembly, the button arm (B) will engage between the two gates (A) allowing the set to be mechanically tuned to a pre-set station at this point. When the station button is not depressed, the arm (B) should clear the gates by ⅛ in. To adjust this clearance, merely loosen the two set screws (D) and slide the assembly (F) in the proper direction on the gang condenser drive shaft; then tighten set screws.

The red dot (C) indicates the position of the pointer and is an aid in locating the desired station when the pointer is removed.

Station Set-up

The buttons are easily set up for the station as follows: Use the wrench provided with the receiver to press in a button. Bring the button down until it locks into position, then loosen button lock nut. While still holding the button pressed in, tune in a station and then tighten the button lock nut.

To check the button tuning accuracy, merely press in the button and bring it down until it locks in position. The station should be correctly tuned. Each button will tune the following range of frequencies.

Button No.	Frequency range (Kilocycles)
1	540–590
2	570–670
3	630–780
4	710–940
5	830–1150
6	1020–1400
7	1220–1700
8	1580–1800

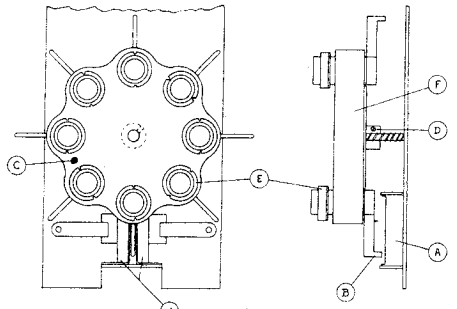

Fig. 4. Dial Mechanism

©John F. Rider, Publisher

REPLACEMENT PARTS LIST
MODELS G-50 AND G-55

Insist on genuine factory-tested parts which may be purchased from authorized dealers

Stock No.	Description	List Price
*RB-041	BOARD—Terminal Board (2 terminals)	$0.10
*RB-066	BOARD—Terminal Board (4 terminals)	.10
*RB-078	BOARD—Terminal Board (7 terminals)	.10
*RC-011	CAPACITOR—.002 Mfd., 600 V. paper (C-17)	.25
*RC-023	CAPACITOR—.005 Mfd., 600 V. paper (C-16, 21)	.25
*RC-042	CAPACITOR—.01 Mfd., 1000 V. paper Capacitor (C-20)	.30
*RC-104	CAPACITOR—.1 Mfd., 600 V. paper (C-12)	.30
*RC-152	CAPACITOR—.25 Mfd., 400 V. paper (C-14)	.40
*RC-156	CAPACITOR—.5 Mfd., 100 V. paper (C-22)	.45
*RC-193	CAPACITOR—.008 Mfd., 600 V. paper (C-18)	.25
RL-259	COIL—Oscillator Coil (L-3)	.75
*RQ-685	RESISTOR—12,000 ohm, 2 w. carbon (R-3)	.25
*RQ-1231	RESISTOR—68 ohm, ½ w. carbon (R-14) (Pkg. of 5)	.70
*RQ-1243	RESISTOR—220 ohm, ½ w. carbon (R-12) (Pkg. of 5)	.70
*RQ-1287	RESISTOR—15,000 ohm, ½ w. carbon (R-11) (Pkg. of 5)	.70
*RQ-1299	RESISTOR—47,000 ohm, ½ w. carbon (R-2) (Pkg. of 5)	.70
*RQ-1315	RESISTOR—220,000 ohm, ½ w. carbon (R-8) (Pkg. of 5)	.70
*RQ-1319	RESISTOR—330,000 ohm, ½ w. carbon (R-9) (Pkg. of 5)	.70
*RQ-1323	RESISTOR—470,000 ohm, ½ w. carbon (R-6) (Pkg. of 5)	.70
*RQ-1327	RESISTOR—680,000 ohm, ½ w. carbon (R-10) (Pkg. of 5)	.70
*RQ-1331	RESISTOR—1 megohm, ½ w. carbon (R-7) (Pkg. of 5)	.70
*RQ-1335	RESISTOR—1.5 megohm, ½ w. carbon (R-13) (Pkg. of 5)	.70
*RQ-1339	RESISTOR—2.2 megohm, ½ w. carbon (R-4) (Pkg. of 5)	.70
*RQ-1355	RESISTOR—10 megohm, ½ w. carbon (R-1) (Pkg. of 5)	.70
*RR-350	RESISTOR—3.3 ohms, 2 w. wire wound (R-15)	.35
*RS-179	SHIELD—Tube Shield for 6A7 or 75	.15
*RS-181	SHIELD—1st or 2nd I.F. Transformer Shield	.20
*RS-183	SHIELD—Tube Shield for 6D6	.15
*RS-215	SOCKET—6-prong Tube Socket (Pkg. of 5)	.60
*RS-217	SOCKET—4-prong Tube Socket (Pkg. of 5)	.50
*RS-219	SOCKET—7-prong Tube Socket (Pkg. of 5)	.60
RS-375	SWITCH—Tone Control Switch (S-3)	.35
RT-253	TRANSFORMER—1st I.F. Transformer (complete)	1.25
RT-254	TRANSFORMER—2nd I.F. Transformer (complete)	1.25
*RT-0510	TRANSFORMER—Power Transformer 115-125 V., 50-60 Cycles (T-1)	3.95
*RT-0512	TRANSFORMER—Power Transformer 115-125 V., 25-60 Cycles (T-1)	6.50
*RT-0513	TRANSFORMER—Universal Power Transformer (T-1)	7.65
*RC-235	CAPACITOR—100 Mmf., mica (C-27)	$0.25
*RC-259	CAPACITOR—250 Mmf., Mica (C-22)	.30
*RC-296	CAPACITOR—500 Mmf., Mica (C-28)	.25
*RC-587	CAPACITOR—Dry Electrolytic 12 Mfd., 450 V.; 8 Mfd., 450 V. (C-32, 33)	1.15
RC-671	CAPACITOR—Double Trimmer 1st or 2nd I.F. Transformer (C-6, 7, 8, 9)	.40
RC-672	CAPACITOR—Oscillator Trimmer (C-4)	.15
RC-724	CONDENSER—2-gang Tuning Condenser (C-1, -2, -3)	3.00
RC-865	CORD—Power Cord with Plug	.45
RC-8024	CABLE—Speaker Cable with Female Plug	.55
RG-013	GRID CLIP—Control Grid Clip (Pkg. of 5)	.10
RK-025	KNOB—Control Knob (Pkg. of 5)	.40
RL-055	COIL—Antenna Coil (L-2)	.80
RV-038	VOLUME CONTROL—Volume Control and Power-Switch (R-5, S-4)	$0.95
*RW-101	WASHER—Felt Washer for Knobs (Pkg. of 10)	.45
*RW-406	WAVE TRAP—Wave Trap Assembly (L-1, C-10)	.85
RX-039	ASSEMBLY—Gang Condenser Mounting Cushions, Washer and Screws	.05
	SPEAKER ASSEMBLY G-50	
RB-074	BOARD—Terminal Board (2 terminals)	.10
*RC-923	CONE—6½-inch Cone and Voice Coil Assembly	.90
*RC-1950	CLAMP—Voice Coil Spider Clamp	.05
*RP-015	PLUG—Male Speaker Plug	.20
RS-068	SPEAKER—6½-inch Speaker (complete)	5.90
*RT-428	TRANSFORMER—Output Transformer (T-2)	1.20
	SPEAKER ASSEMBLY G-55	
*RC-924	CONE—8-inch Cone and Voice Coil Assembly	.90
*RC-990	CLAMP—Voice Coil Spider Clamp	.05
*RP-015	PLUG—Male Speaker Plug	.20
RS-069	SPEAKER—8-inch Speaker (complete)	6.10
*RS-416	SPRING—Voice Coil Leads Spring (Pkg. of 2)	.10
RT-433	TRANSFORMER—Output Transformer (T-2)	1.20
	DIAL MECHANISM	
RC-1971	CAP—Brass Push Button Cap and Window (Pkg. of 5)	.25
RC-8055	CARD—Station Letter Cards (Set of 5)	.25
RD-063	DIAL—Dial Scale	.95
RL-921	LEVER—Push Button Lever	.75
RN-003	NUT—Nut for Dial Pointer Disc	.15
RN-004	NUT—Lock Nut for Push Button	.20
RP-092	POINTER—Pointer Disc and Nut	.75
RR-921	REFLECTOR—Reflector Jewel and Holder	.10
RS-230	SOCKET—Lamp Socket Assembly	.10
RS-507	SLEEVE—Push Button Sleeve, Spring and Ring	.50
RW-500	WRENCH—Dial Nut and Push Button Wrench	.10
RX-040	ASSEMBLY—Push Button Dial Mechanism (complete)	7.35

* Used on previous receivers.

(Prices subject to change without notice)

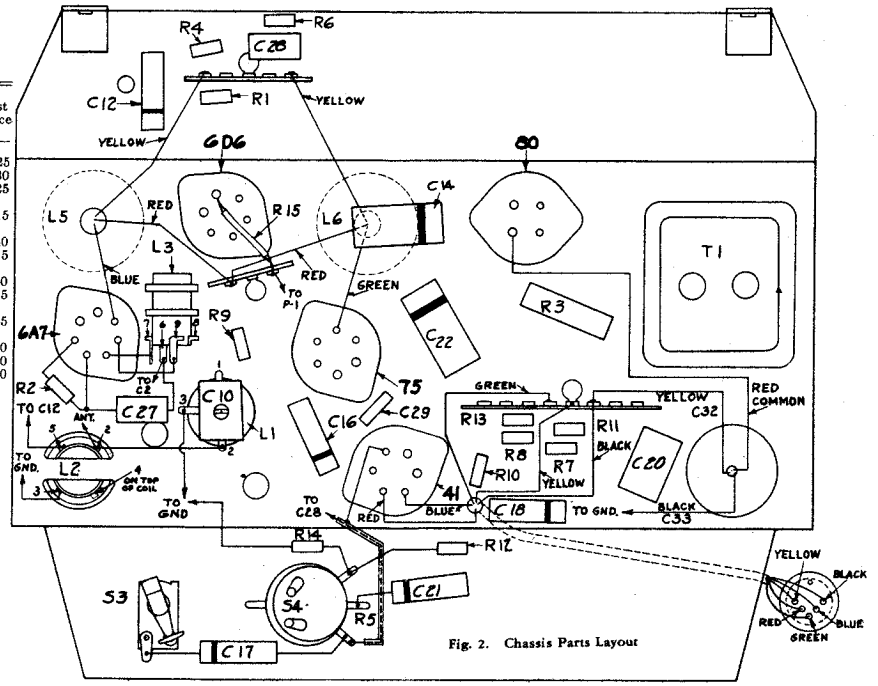

Fig. 2. Chassis Parts Layout

ALIGNMENT PROCEDURE

I.F.	*Broadcast*	*Broadcast*
465 kc.	*1500 kc.*	*1830 kc.*

In order to align these receivers properly, it is necessary to have the following test equipment.

1. A modulated test oscillator.
2. An output indicator such as an a-c voltmeter with a range of from 3 to 5 volts.
3. A screwdriver type aligning tool.

The trimmer locations are shown in Fig. 3.

I.F. Alignment

Turn the volume control to maximum (extreme clockwise position). Tune the receiver to a point where no signal comes in and short circuit the antenna and ground leads.

Connect the test oscillator output between the chassis and through a .05 Mfd. capacitor to the control grid of the 6A7 tube. Connect the output meter across the voice coil of the speaker. Set the test oscillator to 465 kc. and adjust the output until a small deflection is obtained on the output meter.

The four I.F. trimmers (see Fig. 3) are adjusted in the following sequence:

1. Secondary trimmer on second I.F. transformer
2. Primary trimmer on second I.F. transformer
3. Secondary trimmer on first I.F. transformer
4. Primary trimmer on first I.F. transformer

Throughout all adjustments the output should be maintained at a low level by decreasing the test oscillator output as various stages are aligned. After these adjustments have been made the same procedure should be repeated as a final check.

I.F. Wave Trap Alignment

Leave the test oscillator set at 465 kc. and connect one output lead to the receiver chassis and the other through a 250 mmf. condenser in series with 400 ohms to the receiver antenna lead. Adjust C-10 for minimum output.

R.F. Alignment

Connect the signal generator to the antenna and ground leads of the chassis through a dummy antenna consisting of a 400 ohm resistor in series with a 250 mmf. capacitor. Connect the output indicator across the voice coil of the speaker. With the gang condenser set to the minimum capacity position, i.e., plates fully open, peak the oscillator trimmer C-4 (front section) for maximum output with the signal generator set at the 1830 kc. point. Now reduce the signal generator frequency to 1500 kc. and tune in carefully this new frequency by means of the gang condenser. Now peak the antenna trimmer (C-3) (rear section) for a maximum output.

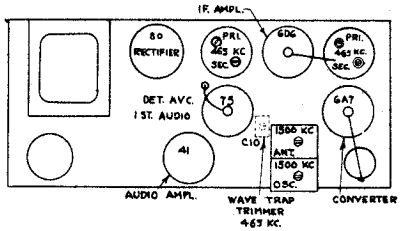

Fig. 3. Chassis Layout and Trimmer Location

MODELS GD-41,GD-41U
Schematic,Voltage
Alignment,Parts
Specifications

GENERAL ELECTRIC CO.

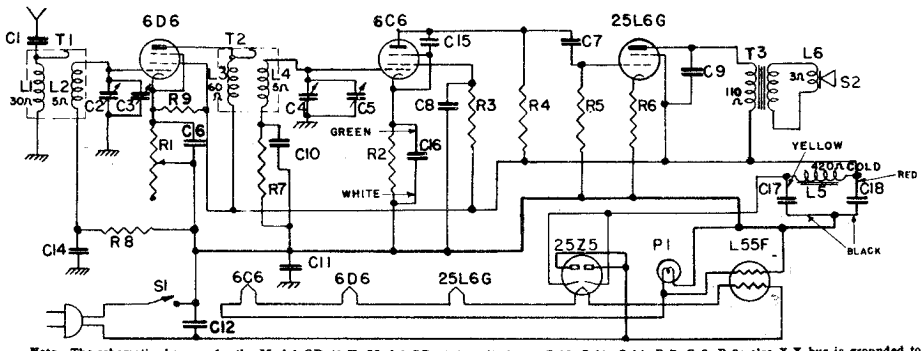

Note—The schematic shown is for the Model GD-41-U. Model GD-41-A omits items C-10, C-11, C-14, R-7, R-8, R-9; also X-X bus is grounded to chassis, coils L-2 and L-4 return to chassis, C-15 to chassis ground instead of to 6C6 cathode, low end of volume control is connected between C-1 and L-1.

SOCKET VOLTAGES

Tube No.	Plate to −B Volts D.C.		Screen to −B Volts D.C.		Cathode to −B Volts D.C.		Cathode Current M.A. D-C		Heater Volts	
	AC	DC	AC	DC	AC	DC	AC	DC	AC	DC
6D6	113	90	113	90	9.0	7.4	0.7	0.6	6.35	6.06
6C6	20 *	16.4 *	45	37	3.1	2.5	0.1	0.08	6.35	6.06
25L6G	108	88	113	90	7.6	6.2	40.5	33.1	25.0	23.5
25Z5	.....	.....			133	108	43.0	35.0	26.0	24.0

Line voltage 115 AC or DC—No signal input—1000 ohms per volt meter * Measured on 250 volt scale.
Dial pointer at 540 kc. Volume control at minimum. Note—The B − is not chassis ground on the Model GD-41-U.

MODELS GD-41 AND GD-41-U

Physical Specifications

	GD-41	GD-41-U
Model		
Height	7¾ inches	7¾ inches
Width	10⅝ inches	10⅝ inches
Depth	6⅛ inches	6⅛ inches
Weight packed	10 lbs.	10 lbs.

Tuning Control Drive Ratio 8:1

Electrical Specifications

Rating Label	Power Supply (Volts)	Frequency (Cycles)	Power Consumption (Watts)
GD-41A	105–125	40–100	48
GD-41C	105–125	25–40	48
GD-41-U	105–125	40–100	48

Tuning Frequency Range
Band "B" ..... 540–1800 kc.
Alignment Frequency ..... 1500 kc.

Electrical Power Output
Undistorted ..... 1.0 watt
Maximum ..... 2.0 watts

Loud-speaker—Electrodynamic
Outside Cone Diameter ..... 5 inches
Voice Coil Impedance ..... 3.5 ohms at 400 cycles
Field Coil Resistance ..... 420 ohms (cold)

Tubes
R. F. Amplifier GE-6D6
Detector GE-6C6
Power Output GE-25L6G
Rectifier GE-25Z5
Ballast Tube Resistor L55F
Dial Lamp ..... MAZDA No. 44

GENERAL INFORMATION

Models GD-41 and GD-41-U are compact four tube AC-DC tuned radio frequency receivers that operate only in the broadcast band of frequencies. The Model GD-41 has one side of the power line connected directly to the chassis ground; while in the Model GD-41-U, condensers are used to isolate the power supply voltage from the chassis frame. Model GD-41-U is fully approved by Underwriters' Laboratories.

When operating from a DC source of power, it is necessary to insert the power plug with proper polarity; otherwise, the receiver will fail to function. If any hum is noticed when the receiver is used on AC, reverse the power plug in the receptacle.

ALIGNMENT

Connect the high side of the signal generator through a 250 mmf. condenser to the antenna lead. The low side of the signal generator output should be connected to the receiver chassis through a .05 mfd. condenser. Connect a suitable output meter across the voice coil leads; then proceed as follows:

1. With gang condenser plates completely closed, the dial pointer should coincide with the horizontal dial line.
2. Tune receiver to the 1500 kc. point on the dial; then align trimmers (C-3 and C-5) on the gang condenser at 1500 kc. for a maximum output meter reading.

Precaution—One side of the power supply is connected to the chassis—Do not connect chassis to any external ground.

REPLACEMENT PARTS LIST

Stock No.	Description	List Price
	CHASSIS ASSEMBLY	
*RC-009	CAPACITOR—.001 mfd., 600 V., paper (C-1) (GD-41-U only)	$0.30
*RC-039	CAPACITOR—.01 mfd., 600 V. paper (C-7, 8, 10, 14) (C-1 on GD-41)	.25
*RC-048	CAPACITOR—.02 mfd., 600 V. paper (C-9)	.30
*RC-092	CAPACITOR—.05 mfd., 600 V. paper (C-6, 12)	.30
*RC-104	CAPACITOR—.1 mfd., 600 V. paper (used on GD-41-U only) (C-11)	.30
*RC-235	CAPACITOR—100 mmf., mica (C-15)	.25
RC-598W	CAPACITOR—5 mfd., 16 mfd., 10 mfd., dry electrolytic (C-16, 17, 18)	1.50
RC-730W	CONDENSER—2 gang tuning condenser (C-2, 3, 4, 5)	2.50
*RC-865	CORD—Power cord with plug	.45
RC-934W	CONE—5-inch speaker cone	2.50
RC-5103W	CAPACITOR—Dry electrolytic (C-16, 17, 18) (25 cycle only) *	2.00
RC-8062W	CORD—Drive cord and spring	.25
RD-076W	DIAL—Dial scale	.40
RD-077W	DRIVE—Condenser drive drum assembly	.40
*RG-013	GRID CLIP—Control grid clip (Pkg. 5)	.10
RH-002W	HANK—Antenna hank—20-foot	.30
RK-029W	KNOBS—Control knobs (Pkg. 2)	.40
RL-064W	COIL—Antenna coil (L-1, L-2) (GD-41-U only)	1.00
RL-068W	COIL—Antenna coil (L-1, L-2) (GD-41 only)	.90
RL-143W	COIL—R.F. coil (L-3, L-4) (GD-41-U only)	.95
RL-147W	COIL—R.F. coil (L-3, L-4) (GD-41 only)	.85
RL-352W	COIL—Speaker field coil	2.50
RP-114W	POINTER—Dial scale pointer	$0.50
*RQ-1239	RESISTOR—150 ohm, ½-W. carbon (R-6) (Pkg. 5)	.70
*RQ-1296	RESISTOR—35,000 ohm, ½-W. carbon (R-2) (Pkg. 5)	.70
*RQ-1299	RESISTOR—50,000 ohm, ½-W. carbon (R-9) (Pkg. 5)	.70
*RQ-1324	RESISTOR—0.5 megohm, ½-W. carbon (used on Model GD-41-U only) (R-7, 8) (Pkg. 5)	.70
*RQ-1331	RESISTOR—1.0 megohm, ½-W. carbon (R-4, 5) (Pkg. 5)	.70
*RQ-1343	RESISTOR—3.0 megohm, ½-W. carbon (R-3) (Pkg. 5)	.70
RR-741W	RESISTOR—Ballast tube resistor	.60
RS-078W	SPEAKER—5-inch dynamic speaker (GD-41)	4.25
RS-080W	SPEAKER—5-inch dynamic speaker (GD-41-U)	4.50
RS-189W	SHIELD—Tube shield, base and ring	.15
RS-191W	SHIELD—Asbestos shield (GD-41-U)	.15
*RS-200	SOCKET—8 pin tube socket (octal base) (Pkg. 5)	.75
*RS-215	SOCKET—6-prong socket (Pkg. 5)	.60
RS-913W	SHAFT—Drive shaft and "C" washer	.20
RT-441W	TRANSFORMER—Output transformer (T-3)	2.50
RV-043W	VOLUME CONTROL—Combination volume control (R-1)	1.10
RW-026W	WINDOW—Dial scale window	.40
RX-050W	ASSEMBLY—Pilot lamp assembly (GD-41)	.20
RX-054W	ASSEMBLY—Pilot lamp assembly (GD-41-U)	.50
RZ-106W	CABINET—GD-41 or GD-41-U cabinet	6.25

* Used on previous receivers.
(Prices subject to change without notice)

Symbol	Description
C-1	Capacitor—.01 Mfd. (GD-41)
C-1	Capacitor—Paper .001 Mfd. (GD-41-U)
C-2	Capacitor—Variable
C-3	Capacitor—Trimmer on gang
C-4	Capacitor—Variable
C-5	Capacitor—Trimmer on gang
C-6	Capacitor—Paper .05 Mfd.
C-7	Capacitor—Paper .01 Mfd.
C-8	Capacitor—Paper .01 Mfd.
C-9	Capacitor—Paper .02 Mfd.
C-10	Capacitor—Paper .01 Mfd.
C-11	Capacitor—Paper .1 Mfd.
C-12	Capacitor—Paper .05 Mfd.
C-14	Capacitor—Paper .01 Mfd.
C-15	Capacitor—Mica 100 Mmf.
C-16	Capacitor—Elect. 5 Mfd. 25 V.
C-17	Capacitor—Elect. 16 Mfd. 150 V.
R-5	Resistor—1 Megohm
R-6	Resistor—150 Ohms
R-7	Resistor—½ Megohm
R-8	Resistor—½ Megohm
T-1	Antenna Transformer
T-2	R.F. Transformer
T-3	Output Transformer (on speaker)
R-1	Resistor—35,000 Ohms
S-1	Power Switch (Comb. with R-1)
S-2	Loud-speaker—5-inch
C-16	Capacitor—Elect. 10 Mfd. 150 V.
R-1	Resistor—35,000 Ohms Volume Control
R-2	Resistor—35,000 Ohms
R-3	Resistor—3 Megohms
R-4	Resistor—1 Megohm

©John F. Rider, Publisher

GENERAL ELECTRIC CO.

MODEL F-51
Schematic, Socket
Trimmers, Dial Data
Chassis Wiring

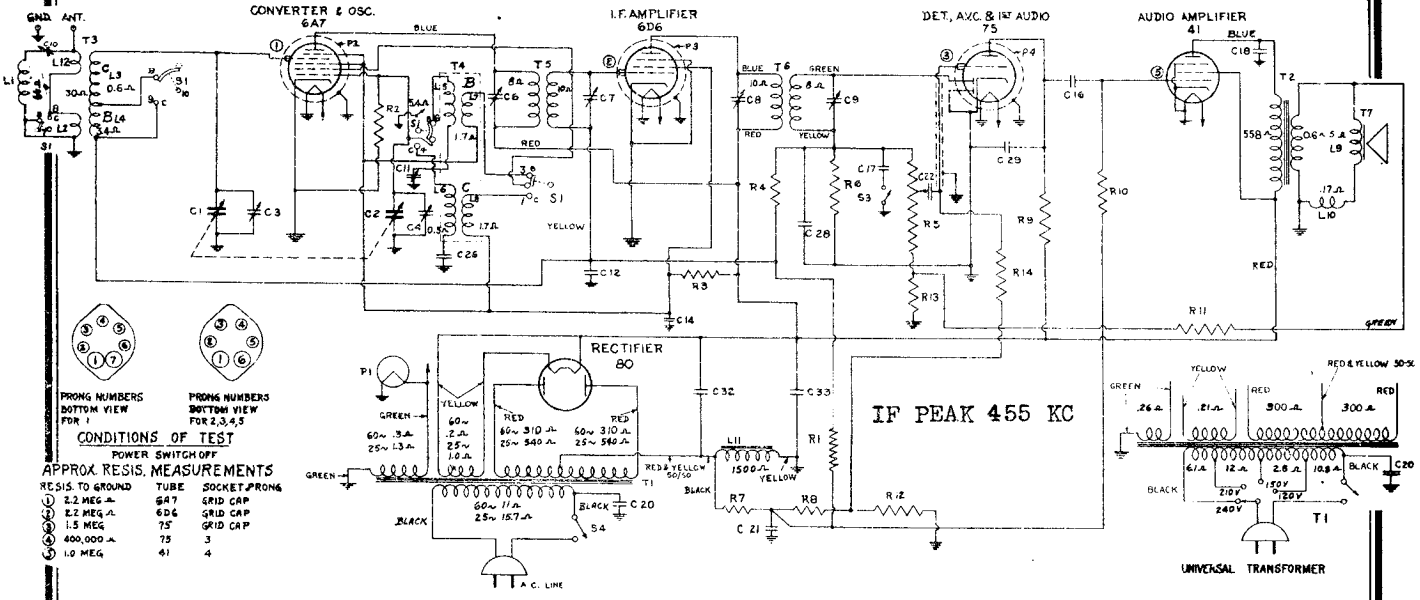

SYMBOL	DESCRIPTION	
C1	TUNING CAPACITOR	13.0-464.7 MMF
C2	TUNING CAPACITOR	13.0-464.7 MMF
C3	TRIMMER CAPACITOR	COMBINED C1
C4		COMBINED C2
C6		OPERATE AT 280 MMF
C7		OPERATE AT 135 MMF
C8		OPERATE AT 135 MMF
C9		OPERATE AT 230 MMF
C10	TRIMMER CAPACITOR	OPERATE AT 70 MMF
C11	PADDER CAPACITOR	OPERATE AT 530 MMF
C12	PAPER CAPACITOR	.05 MF
C14		.25 MF
C16		.001 MF
C17		.002 MF
C18	PAPER CAPACITOR	.008 MF
C20	MOULDED PAPER CAPACITOR	.01 MF
C21	PAPER CAPACITOR	.58 MF
C22	PAPER CAPACITOR	.005 MF
C26	MICA CAPACITOR	1600 MMF
C28		500 MMF
C29	MICA CAPACITOR	250 MMF
C32	DRY ELECTROLYTIC CAPACITOR	12 MF
C33	DRY ELECTROLYTIC CAPACITOR	8 MF
R1	CARBON RESISTOR	10 MEG Ω
R2		47000 Ω
R3		12,000 Ω
R4	CARBON RESISTOR	1.8 MEG Ω
R5	VOLUME CONTROL	2 MEG Ω
R6	CARBON RESITOR	470,000 Ω
R7		1 MEG Ω
R8		220,000 Ω
R9		330,000 Ω
R10		680,000
R11		220 Ω
R12	CARBON RESISTOR	15,000
R13	CARBON RESISTOR	68 Ω
R14	CARBON RESISTOR	1.5 MEG Ω
S1	BAND CHANGE SWITCH	
S3	TONE CONTROL SWITCH	
S4	POWER SWITCH COMBINED R5	

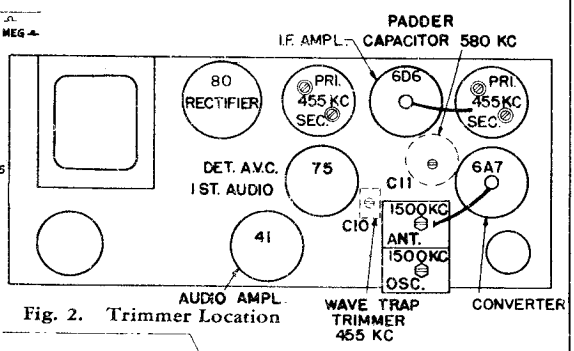

Fig. 2. Trimmer Location

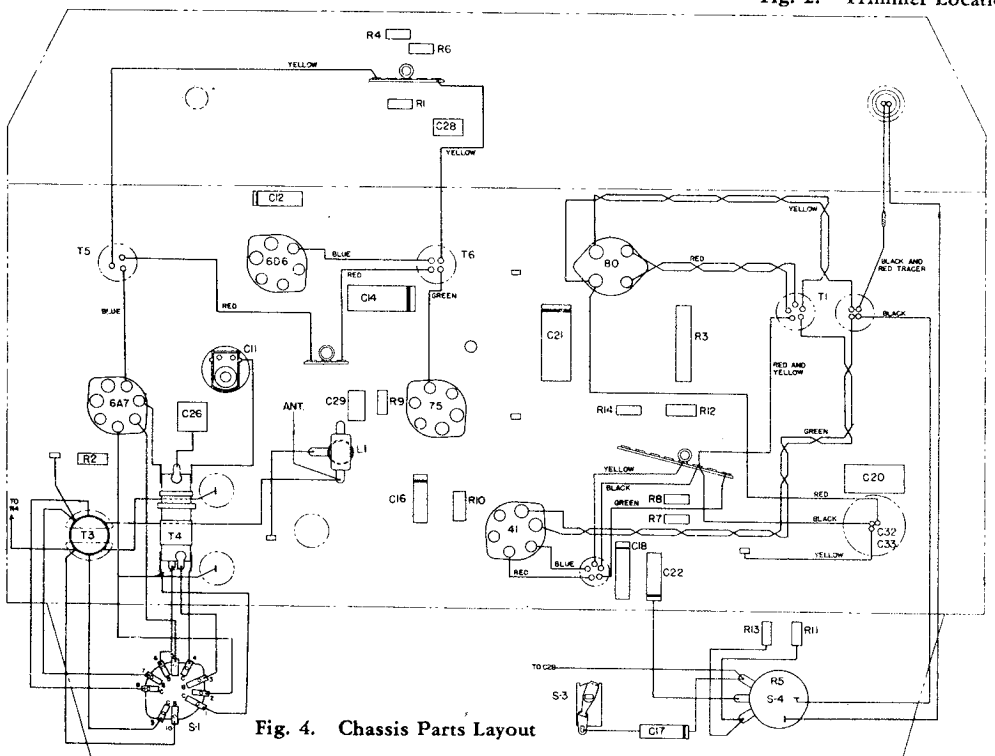

Fig. 4. Chassis Parts Layout

MODEL F-51

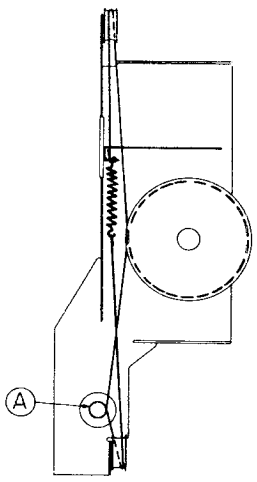

Fig. 3. Dial Mechanism

©John F. Rider, Publisher

MODEL F-51
Alignment, Parts
Specifications
Voltage

GENERAL ELECTRIC CO.

RFS-51 Radio Receiver, Model F-51

REPLACEMENT PARTS LIST MODEL F-51

(Insist on genuine factory-tested parts which may be purchased from authorized dealers)

Stock No.	Description	List Price	Stock No.	Description	List Price
	CHASSIS ASSEMBLY		RQ-1355	RESISTOR—10 megohm, ½ watt carbon (R-1) (Pkg. of 5)	$0.70
*RB-041	BOARD—Terminal board (2 terminals)	$0.10	RS-179	SHIELD—Tube shield for 6A7 or 75	.15
RB-066	BOARD—Terminal board (4 terminals)	.10	RS-181	SHIELD—1st or 2nd I.F. transformer shield	.20
RB-078	BOARD—Terminal board (7 terminals)	.10	RS-183	SHIELD—Tube shield for 6D6	.15
*RC-023	CAPACITOR—.005 Mfd., 600 V., paper (C-16, C-22)	.25	RS-215	SOCKET—6-prong tube socket (Pkg. of 5)	.60
*RC-031	CAPACITOR—.008 Mfd., 1,600 V., paper (C-18)	.25	RS-217	SOCKET—4-prong tube socket (Pkg. of 5)	.50
*RC-091	CAPACITOR—.05 Mfd., 400 V., paper (C-12)	.30	RS-219	SOCKET—7-prong tube socket (Pkg. of 5)	.60
*RC-150	CAPACITOR—.25 Mfd., 400 V., paper (C-14)	.35	RS-423	SPRING—Knob spring (Pkg. of 10)	.25
RC-182	CAPACITOR—.5 Mfd., 100 V., paper (C-21)	.40	RS-427	SWITCH—Tone control switch (S-3)	.35
*RC-198	CAPACITOR—.002 Mfd., 1,000 V., paper (C-17)	.30	RS-378	SWITCH—Band change switch (S-1)	.75
*RC-259	CAPACITOR—250 Mmf., mica (C-29)	.30	RT-0510	TRANSFORMER—Power transformer 115-125 V., 50-60 cycles (T-1)	3.95
*RC-296	CAPACITOR—500 Mmf., mica (C-28)	.25	RT-0512	TRANSFORMER—Power transformer 115-125 V., 25-60 cycles (T-1)	6.50
*RC-348	CAPACITOR—1,000 Mmf., mica (C-26)	.25	RT-0513	TRANSFORMER — Universal power transformer (T-1)	7.65
RC-587	CAPACITOR—.25 Mfd. Electrolytic .12 Mfd., 450 V. (C-32, C-33)	.35	RT-255	TRANSFORMER—1st I.F. transformer (complete) (T-5)	1.25
*RC-634	CAPACITOR—350-550 Mmf., mica (C-11)	.35	RT-256	TRANSFORMER—2nd I.F. transformer (complete) (T-6)	1.25
RC-644	CAPACITOR—Double trimmers 1st. or 2nd I.F. transformer (C-6, C-7, C-8, C-9)	.40	RV-039	VOLUME CONTROL—2 megohm tapped volume control and power switch (R-5, S-4)	1.00
RC-726	CONDENSER—2 gang tuning condenser with trimmers (C-1, C-2, C-3, C-4)	2.20	*RW-101	WASHER—Felt washers on knob shafts (Pkg. of 10)	.45
*RC-756	CAPACITOR—.01 Mfd. 600 V., D.C. moulded (C-20)	.25	RW-406	WAVE TRAP—Wave trap coil and trimmer (C-10, L-1)	.85
RC-8026	CABLE—Speaker cable with female plug	.55	RX-039	ASSEMBLY—Gang condenser mounting cushions, screws and washers	.40
RC-8019	CORD—Power cord without plug	.40	RX-041	ASSEMBLY—Chassis mounting cushions and screws	.05
RG-013	CLIP—Control grid clip (Pkg. of 5)	.10		***SPEAKER ASSEMBLY***	.10
RK-023	KNOB—Control knob (tan) (Pkg. of 5)	.40	RB-074	BOARD—Terminal board (2 terminals)	
RL-056	COIL—"B" and "C" Ant. coil (T-2)	1.25	RC-923	CONE—6½-in. cone and voice coil assembly	.90
RL-260	COIL—"B" and "C" Osc. coil (T-3)	1.15	RC-1950	CLAMP—Voice coil spider clamp	.05
RL-920	LAMP—Pilot lamp .25 Amps. 6.3 V. (Pkg. of 10)	1.50	RP-015	PLUG—Male speaker plug	.20
RQ-685	RESISTOR—12,000 ohm, 2 watt carbon (R-3)	.25	RS-070	SPEAKER—6½-in. speaker (complete)	6.20
RQ-1231	RESISTOR—68 ohm, ½ watt carbon (R-13) (Pkg. of 5)	.70	RT-434	TRANSFORMER—Output transformer	1.25
RQ-1243	RESISTOR—220 ohm, ½ watt carbon (R-11) (Pkg. of 5)	.70	RX-042	ASSEMBLY—Speaker mounting cushions and screws	.10
RQ-1287	RESISTOR—1,500 ohm, ½ watt carbon (R-12) (Pkg. of 5)	.70		***DIAL SCALE MECHANISM***	
RQ-1299	RESISTOR—47,000 ohm, ½ watt carbon (R-2) (Pkg. of 5)	.70	RC-8027	CABLE—Tuning condenser drive cord	.10
RQ-1315	RESISTOR—220,000 ohm, ½ watt carbon (R-8) (Pkg. of 5)	.70	RD-064	DIAL—Dial scale	.25
RQ-1319	RESISTOR—330,000 ohm, ½ watt carbon (R-9) (Pkg. of 5)	.70	RD-050	DRUM—Condenser drive drum	.30
RQ-1323	RESISTOR—470,000 ohm, ½ watt carbon (R-6) (Pkg. of 5)	.70	RP-093	POINTER—Dial scale pointer	.10
RQ-1327	RESISTOR—680,000 ohm, ½ watt carbon (R-10) (Pkg. of 5)	.70	RS-218	SOCKET—Dial Lamp socket assembly	.10
RQ-1331	RESISTOR—1 megohm, ½ watt carbon (R-7) (Pkg. of 5)	.70	*RS-401	SPRING—Tuning drive cord tension spring (Pkg. of 2)	.20
RQ-1335	RESISTOR—1.5 megohm, ½ watt carbon (R-14) (Pkg. of 5)	.70	RZ-090	***CABINET ASSEMBLY*** CABINET—Brown plastic cabinet (complete)	8.40
RQ-1337	RESISTOR—1.8 megohm, ½ watt carbon (R-4) (Pkg. of 5)	.70	RG-401	GRILL CLOTH—Grille cloth and backing	.15

* Used on previous receivers.

Always Specify General Electric Pre-tested Tubes.
(Prices subject to change without notice)

Physical Specifications

Height	9¼ inches
Width	13 inches
Depth	7¾ inches
Weight packed	20 lbs

Tuning Frequency Range

Band "B"	540–1720 kc.
Band "C"	2200–7000 kc.

Intermediate Frequency . . . . 455 kc.

Electrical Output

Undistorted	2.3 watts
Maximum	3.5 watts

Tuning Drive Ratio . . . . 8 to 1

Loudspeaker—Electrodynamic

Cone . . . . 6.5 inches
Voice Coil Impedance 5.5 ohms at 400 cycles

Tone Control . . . . 2 point

GENERAL ELECTRIC

SERVICE NOTES RFS-51

Tubes

Oscillator and Converter	6A7 Pentagrid converter
I.F. Amplifier	6D6 Triple-grid super-control amplifier
Detector, A.V.C. and 1st Audio	75 Duplex diode high-gain triode
Audio Power Amplifier	41 Power Amplifier Pentode
Rectifier	80 Full-wave Rectifier
Dial Lamp	MAZDA No. 46

GENERAL INFORMATION

This two-band receiver employs five General Electric Pre-tested tubes in a superheterodyne circuit. The circuit incorporates a wave trap and a two point tone control.

A signal from the antenna is coupled by the antenna transformer to the control grid on the 6A7 oscillator and converter tube. After conversion to 455 kc. the signal is amplified at this frequency by the intermediate frequency amplifier which employs two double tuned I.F. transformers.

The diode part of the 75 tube is used as a detector and provides the avc voltage. The 75 tube is resistance coupled to the 41 pentode amplifier output tube.

Minimum bias is supplied for all tubes by the voltage drop over the resistance R-7.

Negative feed back is used to improve the tone of reproduction. In this circuit voltage is fed back from the voice coil circuit to a tap on the volume control. This feed back voltage is out of phase with the input voltage to the audio amplifier. Engineers have shown that the resulting degeneration reduces distortion arising in the audio amplifier and extends the tone range.

ALIGNMENT PROCEDURE

Alignment Frequencies

I.F.	Broadcast
455 kc.	1500 and 580 kc.

The location of all trimmers is shown in Fig. 2.

I.F. Alignment

Connect an output meter across the voice coil. Set the volume control for maximum.

Set the test oscillator to 455 kc. and connect one output lead to the receiver chassis and the other through a .05 Mfd. condenser to the control grid of the 6A7. Do not remove the grid lead from the 6A7 as this would remove the minimum bias from this tube. Keep the test oscillator output as low as possible to give a readable output. The four I.F. trimmers, see Fig. 2, should be adjusted in the following sequence for maximum output.

1. Secondary trimmer (C-9) } on second I.F. transformer
2. Primary trimmer (C-8) }
3. Secondary trimmer (C-7) } on first I.F. transformer
4. Primary trimmer (C-6) }

Wave Trap Alignment

Leave the test oscillator set to 455 kc. and connect one output lead to the receiver chassis and the other through a 250 mmf. condenser in series with 400 ohms to the receiver antenna lead. Adjust C-10 for minimum output.

R.F. Alignment

Use the same dummy antenna (250 mmf. and 400 ohms). With 1500 kc. input, and the band switch on the broadcast position, adjust oscillator trimmer C-4 and antenna trimmer C-3 for maximum output. Next with 580 kc. input adjust the broadcast padder C-11 for maximum output while rocking the gang condenser in the vicinity of 580 kc. Repeat the adjustments at 1500 kc. No adjustment is required on "C" band.

Electrical Specifications

Rating Label	Power Supply (Volts)	Frequency (Cycles)	Power Consumption (Watts)
A	115–125	50–60	60
C	115–125	25–60	65
V	115–125 140–155 190–220 220–550	50–60	65

NOTE: Rating "V" receivers may be used on 40-cycle circuits provided the voltage does not exceed 110 on the 115–125 volt tap or 200 volts on the 190–220 volt tap.

TUNING DRIVE

The drive cable should be carefully threaded around the condenser drive drum and pulleys as shown in Fig. 3. "A" is the tuning shaft.

SOCKET VOLTAGES

Tube No.		Plate to Ground Volts D.C.	Screen Grid to Ground Volts D.C.	Cathode to Ground Volts D.C.	Cathode Current M.A.	Heater Volts A.C.
6A7	Oscillator	105	105	0	14.8	6.3
	Converter	230				
6D6	1st I.F. Amp.	230	105	0	10	6.3
75	Det. A.V.C. 1st audio	100 *	....	0	.16	6.3
41	Output	215	230	0	29	6.3
80	Rectifier	300/600 RMS		315 to B—	54	

A.C. line voltage 120, No signal input 1000 ohms per-voltmeter.
Dial pointer at 530 K.C.
* Measured on 500-volt scale.

GENERAL ELECTRIC COMPANY
APPLIANCE AND MERCHANDISE DEPARTMENT, BRIDGEPORT, CONN.

©John F. Rider, Publisher

GENERAL ELECTRIC CO.

MODELS G-53,G-56
Schematic,Socket
Trimmers,Dial Data
Chassis Wiring

MODELS G-53 AND G-56

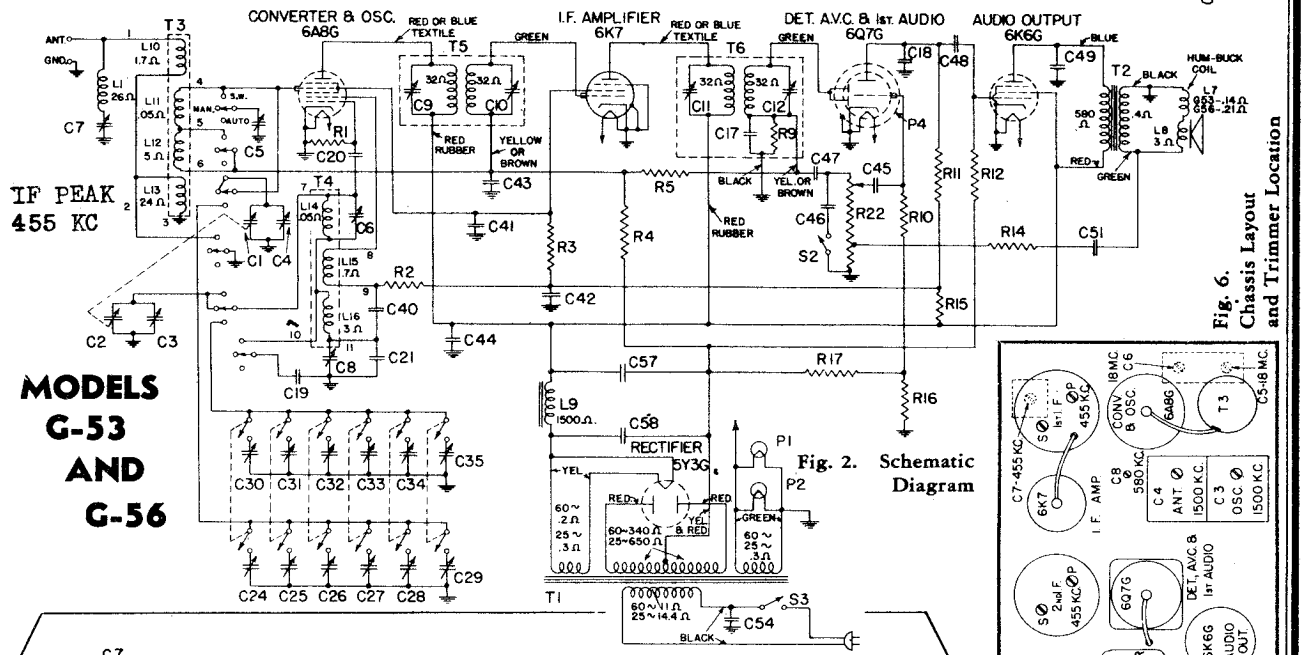

Fig. 2. Schematic Diagram

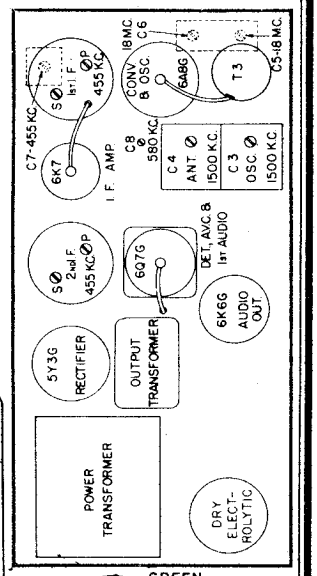

Fig. 6. Chassis Layout and Trimmer Location

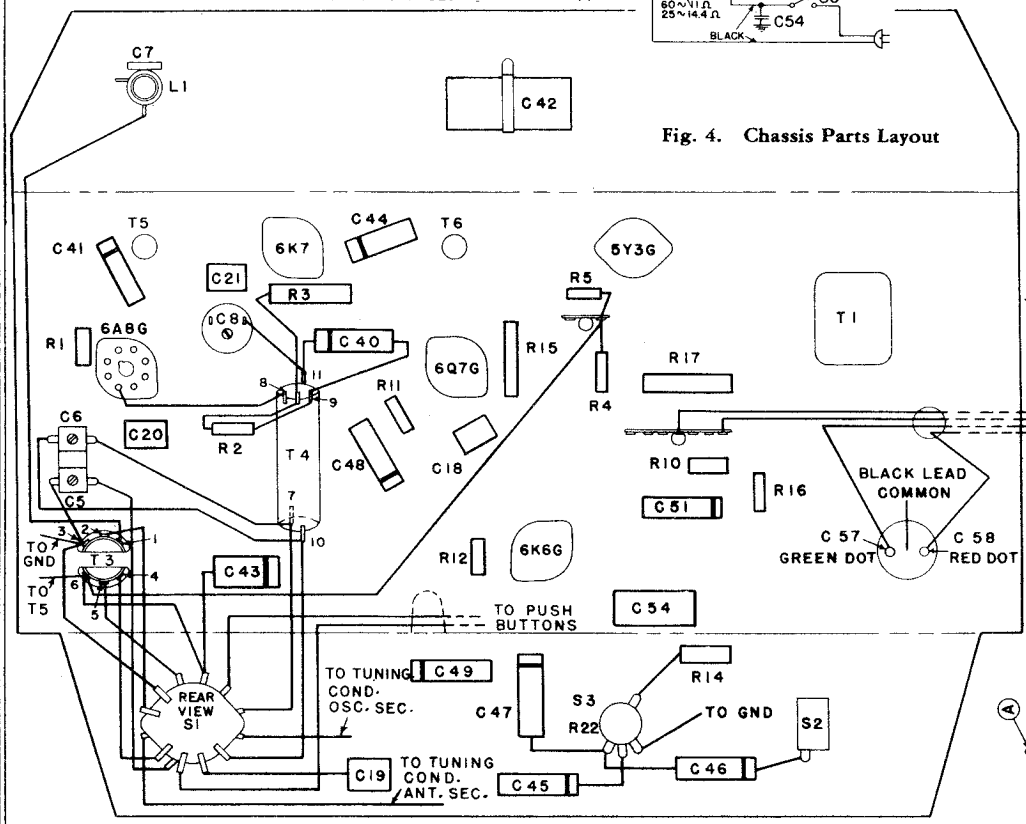

Fig. 4. Chassis Parts Layout

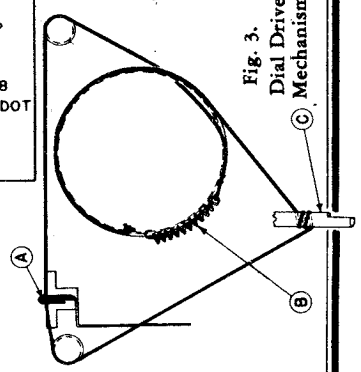

Fig. 3. Dial Drive Mechanism

Symbol	Description	Symbol	Description	Symbol	Description
C5	R.F. Trimmer Capacitor, "D" Band	C40	Paper Capacitor, 0.001 Mfd.	R10	Carbon Resistor, 2.2 Megohms
C6	Osc. Trimmer Capacitor, "D" Band	C41	Paper Capacitor, 0.05 Mfd.	R11	Carbon Resistor, 330,000 Ohms
C8	Osc. Padder Condenser, "B" Band	C42	Paper Capacitor, 0.5 Mfd.	R12	Carbon Resistor, 330,000 Ohms
C17	Mica Capacitor, 470 Mmf.	C43	Paper Capacitor, 0.05 Mfd.	R14	Carbon Resistor, 22,000 Ohms
C18	Mica Capacitor, 330 Mmf.	C44	Paper Capacitor, 0.05 Mfd.	R15	Carbon Resistor, 3900 Ohms
C19	Mica Capacitor, 3900 Mmf.	C45	Paper Capacitor, 0.01 Mfd.	R16	Carbon Resistor, 22 Ohms
C20	Mica Capacitor, 47 Mmf.	C46	Paper Capacitor, 0.001 Mfd.	R17	Carbon Resistor, 330 Ohms
C21	Mica Capacitor, 370 Mmf.	C47	Paper Capacitor, 0.005 Mfd.	R22	Volume Control, 2 Megohms, tap at 15,000 Ohms
C24	Mica Trimmer, 165-450 Mmf.	C48	Paper Capacitor, 0.005 Mfd.		
C25	Mica Trimmer, 95-345 Mmf.	C49	Paper Capacitor, 0.012 Mfd.	T1	Power Transformer
C26	Mica Trimmer, 80-235 Mmf.	C51	Paper Capacitor, 0.1 Mfd.	T2	Output Transformer
C27	Mica Trimmer, 35-175 Mmf.	C54	Molded Paper Capacitor, 0.01 Mfd.	L-8	Speaker, 6½ Inches (G-53)
C28	Mica Trimmer, 30-115 Mmf.	C57	Dry Electrolytic Capacitor, 8 Mfd.		Speaker, 12 Inches (G-56)
C29	Mica Trimmer, 11-60 Mmf.	C58	Dry Electrolytic Capacitor, 8 Mfd.	S1	Band Switch
C30	Mica Trimmer, 165-450 Mmf.	R1	Carbon Resistor, 47,000 Ohms	S2	Tone Control Switch
C31	Mica Trimmer, 95-345 Mmf.	R2	Carbon Resistor, 4700 Ohms	S3	Power Switch (Part of Volume Control)
C32	Mica Trimmer, 80-235 Mmf.	R3	Carbon Resistor, 18,000 Ohms		
C33	Mica Trimmer, 35-175 Mmf.	R4	Carbon Resistor, 10 Megohms	S4	Push-button Switches
C34	Mica Trimmer, 30-115 Mmf.	R5	Carbon Resistor, 1.5 Megohms		
C35	Mica Trimmer, 11-60 Mmf.	R9	Carbon Resistor, 470,000 Ohms		

©John F. Rider, Publisher

MODELS G-53, G-56
Specifications
Alignment

GENERAL ELECTRIC CO.

RGS-53 Radio Receivers, Models G-53 and G-56

SPECIFICATIONS

Physical Specifications

Model	G-53	G-56
Height	10 11/32 in.	38 1/2 in.
Width	18 7/8 in.	26 in.
Depth	7 11/32 in.	10 1/2 in.
Weight Packed	22 lbs.	58 lbs.

Tuning Control Drive Ratio ..... 10 to 1

Electrical Specifications

Rating Label	Power Supply (Volts)	Frequency (Cycles)	Power Consumption (Watts)
A	115–125	50–60	65
V	115–125 140–155 190–220 220–250	50–60	70

Tuning Frequency Range

Band "B" ..... 540 to 1750 kc.
Band "D" ..... 5700 to 18,300 kc.

Intermediate Frequency ..... 455 kc.

Electrical Power Output

Undistorted 2.0
Maximum 3.8

Tone Control ..... 2 Point—
Bass and Normal

Loud-speaker—Electrodynamic
Voice Coil Impedance 3.5 ohms
at 400 cycles

Fig. 5. Over-all I.F. Curve.

ALIGNMENT PROCEDURE

I.F. ALIGNMENT WITH OSCILLOSCOPE

Band Switch Setting	Input Freq.	Point of Input	Dummy Antenna	Trimmer	Comments
1. Band "B"	455 K.C. Sweep	I.F. Grid	.05 Mfd. or Larger	2nd I.F. Sec. (C-12) 2nd I.F. Pri. (C-11)	Gang condenser plates wide open—connect audio input of oscilloscope to ground and to the junction of C-47 and R-5—Adjust trimmers in order mentioned for a single symmetrical curve of maximum amplitude. The resulting curve with input at converter grid is shown in Fig. 5.
2. Band "B"	455 K.C. Sweep	Converter Grid	.05 Mfd. or Larger	1st I.F. Sec. (C-10) 1st I.F. Pri. (C-9)	
3. Band "B"	455 K.C. Sweep	Antenna Post	250 Mmf. 200 Ohms	Wave Trap Trimmer (C-7)	Adjust trimmer for minimum amplitude.

I.F. ALIGNMENT WITH OUTPUT METER

1. Band "B"	455 K.C. with Modulation	I.F. Grid	.05 Mfd. or Larger	2nd I.F. Sec. (C-12) 2nd I.F. Pri. (C-11)	Gang condenser plates wide open—connect output meter across voice coil—keep input signal low and volume control on as far as possible. Adjust all trimmers for maximum output.
2. Band "B"	455 K.C. with Modulation	Converter Grid	.05 Mfd. or Larger	1st I.F. Sec. (C-10) 1st I.F. Pri. (C-9)	
3. Band "B"	455 K.C. with Modulation	Antenna Post	250 Mmf. 200 Ohms	Wave Trap Trimmer (C-7)	Adjust trimmer for minimum output.

R.F. ALIGNMENT

1. Band "B"	....	....	....	....	Close gang condenser plates. Adjust pointer, to first line at left end of tuning scale.
2. Band "B"	1500 K.C. with Modulation	Antenna Post	250 Mmf. 200 Ohms	Osc. (C-3) Ant. (C-4)	Connect output meter across voice coil—tone control on "bass" position—peak trimmers for maximum output with a low input signal.
3. Band "B"	580 K.C. with Modulation	Antenna Post	250 Mmf. 200 Ohms	Osc. Padder (C-8)	Adjust padder for a maximum output meter indication in vicinity of 580 kc. while rocking the gang condenser.
4. Band "B"	Repeat Operation 2				
5. Band "D"	18 M.C. with Modulation	Antenna Post	250 Mmf. 200 Ohms	Osc. (C-6) Ant. (C-5)	Peak C-5 for maximum output while rocking the gang at the 18 mc. point. The image of any signal on "D" band should be heard 930 kc. **below** the input signal when proper peak is obtained on oscillator trimmer C-6. Example: 12 mc. image—11.09 mc.

©John F. Rider, Publisher

GENERAL ELECTRIC CO.

MODELS G-53, G-56
Circuit Data, Voltage
Pick-up, Parts

REPLACEMENT PARTS LIST
MODELS G-53 AND G-56

Stock No.	Description	List Price
	CHASSIS ASSEMBLY	$0.10
*RB-008	BOARD—Terminal Board (2 lug)	.10
RB-093	BOARD—Terminal Board (6 lug)	
*RC-009	CAPACITOR—.001 mfd., 600 V. paper (C-40, 46)	.30
*RC-023	CAPACITOR—.005 mfd. 600 V. paper (C-47, 48)	.25
*RC-039	CAPACITOR—.01 mfd., 200 V. paper (C-45)	.25
RC-044	CAPACITOR—.012 mfd., 600 V. paper (complete)	.30
*RC-092	CAPACITOR—.05 mfd., 600 V. paper (C-41, 43, 44)	.30
*RC-104	CAPACITOR—0.1 mfd., 600 V. paper (C-51)	.30
*RC-196	CAPACITOR—0.5 mfd., 600 V. paper (C-42)	.75
RC-216	CAPACITOR—47 mmf., mica (C-20)	.25
*RC-274	CAPACITOR—330 mmf., mica (C-18)	.30
RC-285	CAPACITOR—370 mmf., mica (C-21)	.25
RC-294	CAPACITOR—470 mmf., mica (C-17)	.30
RC-380	CAPACITOR—3900 mmf., mica (C-19)	.35
RC-593	CAPACITOR—8 mfd., 450 V., 8 mfd., 450 V., dry electrolytic (C-57, 58)	1.40
*RC-630	CAPACITOR—Oscillator Padder (C-8)	.40
RC-674	CAPACITOR—Wave Trap Trimmer (C-7)	.15
RC-675	CAPACITOR—Trimmer Capacitors "D" Band (C-5, 6)	.30
RC-727	CONDENSER—Tuning Condenser (C-1, 2, 3)	2.25
RC-791	CAPACITOR—.01 mfd., 250 V. A.C. (C-54)	.30
RC-8035	CABLE—Speaker Cable and Plug	.50
*RC-863	CORD—Power Cord	.65
RG-016	GRID CLIP—Control Grid Clip (Pkg. of 5)	.10
RK-027	KNOB—Winged Control Knob (Pkg. of 5)	.50
RK-028	KNOB—Plain Control Knob (Pkg. of 5)	.30
RL-961	COIL—Antenna Coil, Bands "B" and "D"	1.15
RL-265	COIL—Oscillator Coil, Bands "B" and "D"	.75
RL-603	COIL—Wave Trap Coil (L-1)	.60
*RQ-1219	RESISTOR—22 ohm, ½ watt Carbon (R-16) (Pkg. of 5)	.70
*RQ-1275	RESISTOR—4700 ohm, ½ watt carbon (R-2) (Pkg. of 5)	.70
*RQ-1291	RESISTOR—22,000 ohm, ½ watt carbon (R-14) (Pkg. of 5)	.70
*RQ-1299	RESISTOR—47,000 ohm, ½ watt carbon (R-1) (Pkg. of 5)	.70
*RQ-1319	RESISTOR—330,000 ohm, ½ watt carbon (R-11, 12) (Pkg. of 5)	.70
*RQ-1323	RESISTOR—470,000 ohm, ½ watt carbon (R-9) (Pkg. of 5)	.70
*RQ-1335	RESISTOR—1.5 megohm ½ watt carbon (R-3) (Pkg. of 5)	.70
*RQ-1339	RESISTOR—2.2 megohm, ½ watt carbon (R-10) (Pkg. of 5)	.70
*RQ-1355	RESISTOR—10 megohm, ½ watt carbon (R-4) (Pkg. of 5)	.70
*RQ-1447	RESISTOR—330 ohm, 1 watt carbon (R-17)	.20
*RQ-1473	RESISTOR—3900 ohm, 1 watt carbon (R-15)	.20
*RQ-1489	RESISTOR—18,000 ohm, 1 watt carbon (R-3)	.20
RS-185	SHIELD—6Q7G Tube Shield (complete)	.15
*RS-200	SOCKET—Octal Base Tube Socket (Pkg. of 5)	.75
*RS-204	SOCKET—Rectifier Tube Socket (Pkg. of 5)	.75
*RS-218	SOCKET—Lamp Socket Assembly	.10
*RS-223	SOCKET—Socket for 6A8G (Pkg. of 5)	.80

Stock No.	Description	List Price
RS-890	SWITCH—Tone Control Switch (S-2)	$0.35
RS-891	SWITCH—Band Change Switch (S-1)	.90
RT-0516	TRANSFORMER—Power Transformer (50-60 cycles) (T-1)	4.20
RT-0517	TRANSFORMER—Power Transformer (25 cycles) (T-1)	7.05
RT-0518	TRANSFORMER—Power Transformer (Universal) (T-1)	9.00
RT-259	TRANSFORMER—2nd I.F. Transformer (complete)	1.40
RT-260	TRANSFORMER—1st I.F. Transformer (complete)	1.15
RT-438	TRANSFORMER—Output Transformer (T-2)	1.70
RV-040	VOLUME CONTROL—2 meg. Volume Control and Power Switch (R-22, S-3)	.95
*RW-101	WASHER—Felt Washers for Control Knobs (Pkg. of 10)	.45
*RX-015	ASSEMBLY — Chassis Mounting Assembly	.10
RX-046	ASSEMBLY—Gang Condenser Mounting Assembly	.20
	SPEAKER ASSEMBLY G-53	
RC-931	CONE—6½-in. Cone and Voice Coil Assembly	.60
RD-300	DUST CAP—6½-in. Cone Dust Cap (Pkg. of 5)	.10
RP-109	PLUG—Male Speaker Plug	.20
RS-077	SPEAKER—6½-in. Speaker (complete)	3.75
RX-047	ASSEMBLY—Speaker Nuts and Washers	.05
	SPEAKER ASSEMBLY G-56	
RC-932	CONE—12-in. Cone and Voice Coil Assembly	1.10
RD-301	DUST CAP—Speaker Dust Cap (Pkg. of 5)	.10
RP-109	PLUG—Male Speaker Plug	.20
RS-072	SPEAKER—12-in. Speaker (complete)	5.60
RX-047	ASSEMBLY—Speaker Nuts and Washers	.05
	TOUCH-TUNING AND DIAL SCALE MECHANISM	
RB-612	BUTTON—Molded Push Button (Pkg. of 5)	.70
RC-8034	CORD—Drive Cord (Pkg. of 5)	.35
RC-8033	CARD—Station Letter Card (set)	.70
RC-8073	CARD—Station Letter Card (sheet 1) (CFAC-KIT)	.45
RC-8074	CARD—Station Letter Card (sheet 2) (KIUL-WEBQ)	.15
RC-8075	CARD—Station Letter Card (sheet 3) (WEBR-WSM)	.15
RC-8076	CARD—Station Letter Card (sheet 4) (WSMB-XE2)	.15
RD-070	DRIVE—Condenser Drive Drum	.20
RD-204	DRIVE—Drive Shaft, Dial Scale Escutcheon	.15
RP-028	ESCUTCHEON—Dial Scale Escutcheon	1.60
*RP-075	PULLEY—Pointer Drive Cord Pulley (Pkg. of 5)	.20
RP-108	POINTER—Dial Scale Pointer	.15
RS-392	SWITCH—Touch-tuning Switch (less trimmer strips)	2.35
*RS-432	SPRING—Spring for molded Push Button (Pkg. of 5)	.20
RS-444	SPRING—Spring for molded Push Button (Pkg. of 10)	.10
RT-852	TRIMMER STRIP—Push Button Trimmer Strip, Osc. Section	1.05
RT-853	TRIMMER STRIP—Push Button Trimmer Strip; R.F. Section	1.05

* Used on previous receivers.

(Prices subject to change without notice)

GENERAL INFORMATION

Models G-53 and G-56 are two-band A.C operated receivers, employing five General Electric Pre-tested Tubes as described above, in a superheterodyne circuit. They incorporate a simplified trimmer tuned "Touch-Tuning" system allowing a set-up of six stations for automatic tuning. Other features of design include I.F. wave trap, degenerative feedback and an improved dust-proof electrodynamic speaker.

Coil System

The "B" and "D" band antenna coils are wound on a single coil form (T-3) as shown in Fig. 2. T-4 is the oscillator transformer for both the "B" and "D" bands. All coil terminals are numbered in Fig. 2 and 4 to facilitate in service by showing common points on the schematic diagram. Fig. 2, and the pictorial wiring diagram, Fig. 4.

The following table shows the coils in use for the various positions of the wave change switch.

Band Switch Position	Antenna Primary	Antenna Secondary	Oscillator Grid Coil	Oscillator Plate Coil	REMARKS
Short Wave	L-10	L-11	L-14	L-15	L-12 Shorted L-16 Shorted
Manual Broadcast	L-10 and L-13	L-11 and L-12	L-14 and L-16	L-15	Tuned by gang (after con-nected to L-1 and C-2
Automatic Tuning	L-10 and L-13	L-11 and L-12	L-14 and L-16	L-15	C-1 and C-2 trimmers set by fixed trimmers

Loud-speaker

12-inch speaker—To center the voice coil, remove dust cover by softening with acetone. Loosen the two clamping screws and place three 1 in. by ¼ in. by 0.010 in. paper or celluloid strips equally spaced around pole piece for clearance—then tighten clamping screws. Remove strips and cement the dust cap back in place with glyptal cement.

6½-inch speaker—To center the voice coil, remove dust cover by softening with acetone. Loosen the two clamping screws and place three 1 in. by ¼ in. by 0.010 in. paper or celluloid strips equally spaced around pole piece for clearance—then tighten clamping screws. Remove strips and cement the dust cap back in place with glyptal cement. If the cone is off center in this speaker, it is necessary to replace cone. Remove cone and clean cementing surfaces. Cut a piece of 0.005 in. to 0.006 in. paper about 1½ in. wide and 2¼ in. long and roll into a cylinder and place inside the voice coil collar. Apply a film of glyptal cement to the rim and spider shelf of speaker frame. Using the paper cylinder as a pilot over the center post, place the cone assembly in the housing making sure that the voice coil leads head toward the plug. Press the edge of the cone to contact the cemented surface, and, using a bent paper clip or similar tool, do the same to the edge of the spider. Give the cement sufficient time to set before removing the center shim. Cement dust cap in cone and connect speaker voice coil leads to the plug.

Phonograph Connection

Fig. 1 shows a simple sketch for connecting a crystal or high impedance magnetic pick-up into the G-53 or G-56 circuit for the reproduction of phonograph recordings. S-1 is either a rotary or toggle type double-pole, double-throw switch. A suitable loading circuit composed of a resistor or resistor and capacitor network should be used across the pick-up leads when using a crystal type unit. It is very important that the pick-up leads have a shield such as copper braid to prevent hum interference. This shield should be connected to the chassis ground.

The circuit should be opened between R-5 and C-47 and phonograph connections made as shown in Fig. 1. This procedure requires removal of the chassis from the cabinet.

When the pick-up is connected as shown, the regular radio volume and tone controls work for both radio and phonograph reproduction.

Fig. 1. Pick-up Connections

SOCKET VOLTAGES

Tube No.		Plate to Ground Volts D.C.	Screen Grid to Ground Volts D.C.	Cathode to Ground Volts D.C.	Cathode Current M.A. D.C.	Heater Volts A.C.
6A8G	Converter	236	95	0	12.2	6.5
	Oscillator	186	....			
6K7		236	95	0	8.7	6.5
6Q7G		84 *	....	0	0.4	6.5
6K8G		220	236	0	30.1	6.5
5Y3G		....	....	320	51.4	5.3

A-C line voltage—120. No signal input. 1000 ohms per volt meter. Dial pointer at 530 kc. on "B" band.
* Measured on 500-volt scale.

©John F. Rider, Publisher

©John F. Rider, Publisher

I. F. ALIGNMENT WITH OSCILLOSCOPE

Band Switch Setting	Input Freq.	Point of Input	Dummy Antenna	Trimmer	Comments
1. Band "B"	465 kc. Sweep	I.F. Grid	.05 Mfd. or Larger	2nd I.F. Sec. (C-10) 2nd I.F. Pri. (C-9)	Gang condenser plates wide open—connect input of oscilloscope to B- and to the junction of R-3 and R-4 of the 2nd I.F. transformer—Adjust trimmers in order mentioned for a single symmetrical curve of maximum amplitude.
2. Band "B"	465 kc. Sweep	Converter Grid	.05 Mfd. or Larger	1st I.F. Sec. (C-7) 1st I.F. Pri. (C-6)	
3. Band "B"	465 kc. Sweep	Antenna Lead	250 Mmf. 400 Ohms	Wave Trap Trimmer (C-2)	Adjust trimmer for minimum amplitude.

I. F. ALIGNMENT WITH OUTPUT METER

1. Band "B"	465 kc. with Modulation	I.F. Grid	.05 Mfd. or Larger	2nd I.F. Sec. (C-10) 2nd I.F. Pri. (C-9)	Gang condenser plates wide open—connect output meter across voice coil—keep input signal low and volume control on as far as possible. Adjust all trimmers for maximum output
2. Band "B"	465 kc. with Modulation	Converter Grid	.05 Mfd. or Larger	1st I.F. Sec. (C-7) 1st I.F. Pri. (C-6)	
3. Band "B"	465 kc. with Modulation	Antenna Lead	250 Mmf. 400 Ohms	Wave Trap Trimmer (C-2)	Adjust trimmer for minimum output.

R. F. ALIGNMENT

1. Band "B"					Close gang plates—Adjust pointer to first line at left end of tuning scale.
2. Band "C"	No adjustments necessary				
3. Band "B"	1500 kc. with Modulation	Antenna Lead	250 Mmf. 400 Ohms	Osc. trimmer (Front sect. of gang cond.) Ant. trimmer (Rear sect. of gang cond.)	Connect output meter across voice coil—tone control on "bass" position—peak trimmers for maximum output with a low input signal.
4. Band "B"	580 kc. with Modulation	Antenna Lead	250 Mmf. 400 Ohms	Osc. padder (C-3)	Adjust padder for a maximum output meter indication in vicinity of 580 kc. while rocking the gang condenser.
5. Band "B"	Repeat operation No. 3				

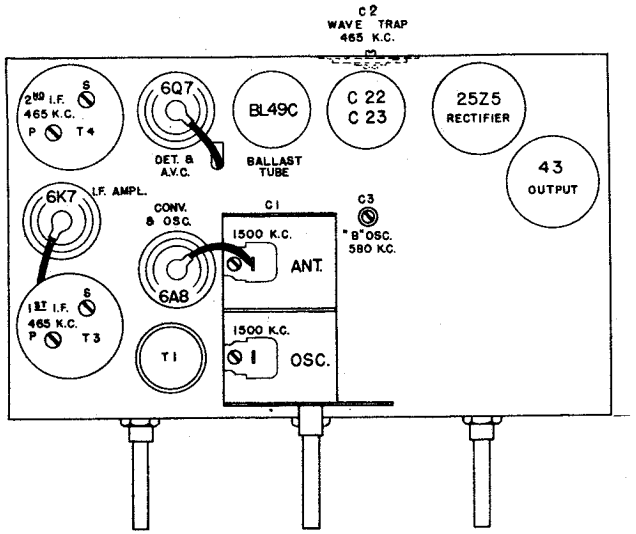

Fig. 3. Chassis Layout and Trimmer Location

REPLACEMENT PARTS LIST

Models FD-62 and FD-625

Insist on genuine factory-tested parts which may be purchased from authorized dealers.

Stock No.	Description	List Price
*RB-041	BOARD—Terminal board (3 terminals) (on rear chassis apron)	$0.10
RB-058	BOARD—Terminal board (8 terminals)	.10
RB-059	BOARD—Terminal board (4 terminals) (under 1st I.F.)	.10
RB-077	BOARD—Terminal board (4 terminals) (under 2nd I.F.)	.10
*RC-017	CAPACITOR—.0045 Mfd., 200 V. paper (C-13)	.25
*RC-023	CAPACITOR—.005 Mfd., 600 V. paper (C-20)	.25
*RC-042	CAPACITOR—.01 Mfd., 1,000 V. paper (C-5, C-12, C-17)	.30
*RC-080	CAPACITOR—.02 Mfd., 400 V. paper (C-14)	.25
*RC-091	CAPACITOR—.05 Mfd., 200 V. paper (C-8, C-18, C-26)	.30
*RC-149	CAPACITOR—.25 Mfd., 400 V. paper (C-15, C-21, C-25)	.35
*RC-198	CAPACITOR—.002 Mfd., 1,000 V. paper (C-19)	.30
*RC-213	CAPACITOR—50 Mmf. mica (C-27)	.25
*RC-234	CAPACITOR—100 Mmf. mica (C-24)	.25
*RC-259	CAPACITOR—260 Mmf. mica (C-11, C-16)	.30
*RC-348	CAPACITOR—1,600 Mmf. mica (C-4)	.35
RC-586	CAPACITOR—Dry electrolytic 50 Mfd., 150 V.; (C-22, C-23)	2.15
*RC-608	CAPACITOR—300-500 Mmf. "B" band padder (C-3)	.45
RC-644	CAPACITOR—Double trimmer pri. and sec., 1st or 2nd I.F. transformer (C-6, C-7, C-9, C-10)	.40
RC-670	CAPACITOR—5-100 Mmf. wave trap trimmer (C-2)	.30
RC-709-22	CONDENSER—2-gang tuning condenser (C-1)	3.25
RC-865	CORD—Power cord with plug	.45
RD-202	DRIVE—Planetary reduction drive (friction)	1.00
RE-025	ESCUTCHEON—Escutcheon and window (complete)	2.00
RG-001	GRID CAP—Control grid cap (Pkg. of 5)	.10
RG-300	GROMMET—Tuning shaft grommet and washer (Pkg. of 5)	.20
RK-017	KNOB—Control knob (Pkg. of 5)	.40
RK-018	KNOB—Wave change switch knob (Pkg. of 5)	.40
RL-042	COIL—"B" and "D" band antenna coil (T-1)	1.20
RL-244	COIL—"B" and "D" band oscillator coil (T-2)	.95
*RL-602	COIL—Wave trap coil (L-13)	.50
RL-920	LAMP—Dial lamp 6.3 V., .25 Amp. (Pkg. of 10)	1.50
RQ-1217	RESISTOR—18 ohm, ½ watt carbon (R-11) (Pkg. of 5)	.70
RQ-1239	RESISTOR—150 ohm, ½ watt carbon (R-10) (Pkg. of 5)	.70
RQ-1275	RESISTOR—4,700 ohm, ½ watt carbon (R-6) (Pkg. of 5)	.70
RQ-1287	RESISTOR—15,000 ohm, ½ watt carbon (R-9) (Pkg. of 5)	.70
RQ-1295	RESISTOR—33,000 ohm, ½ watt carbon (R-14, R-16) (Pkg. of 5)	.70
RQ-1299	RESISTOR—47,000 ohm, ½ watt carbon (R-1) (Pkg. of 5)	.70
RQ-1311	RESISTOR—150,000 ohm, ½ watt carbon (R-15) (Pkg. of 5)	.70
RQ-1315	RESISTOR—220,000 ohm, ½ watt carbon (R-12) (Pkg. of 5)	$0.70
RQ-1319	RESISTOR—330,000 ohm, ½ watt carbon (R-7, R-8) (Pkg. of 5)	.70
RQ-1323	RESISTOR—470,000 ohm, ½ watt carbon (R-2, R-4) (Pkg. of 5)	.70
RQ-1339	RESISTOR—2.2 megohm, ½ watt carbon (R-3) (Pkg. of 5)	.70
RQ-1447	RESISTOR—330 ohm, 1 watt carbon (R-13)	.20
RR-736	RESISTOR—Ballast resistor—Tube BL-49C	.80
RS-141	SHIELD—1st I.F. transformer shield	.15
RS-142	SHIELD—2nd I.F. transformer shield	.15
*RS-200	SOCKET—8-pin octal base socket (Pkg. of 5)	.75
RS-215	SOCKET—6-prong tube socket (Pkg. of 5)	.60
RS-322	SWITCH—Band Switch (S-1)	.75
RS-347	SWITCH—Tone control switch (S-2)	.50
RT-251	TRANSFORMER—1st I.F. transformer (T-3)	1.35
RT-252	TRANSFORMER—2nd I.F. transformer (T-4)	1.40
RT-434	TRANSFORMER—Output transformer	1.30
RT-952	TERMINAL—Speaker lead terminal (Pkg. of 10)	.05
RV-037	VOLUME CONTROL—2 megohm volume control, tap at 500,000 ohms, and power switch (R-5, S-3)	1.00
RW-018	WINDOW—Escutcheon window and rubber cushions	.35
*RW-101	WASHER—Felt washer for knobs (Pkg. of 10)	.45
*RX-015	ASSEMBLY—Chassis mounting screws and washers	.10
*RX-016	ASSEMBLY—Gang condenser mounting cushions and studs	.30
	SPEAKER ASSEMBLY FD-62	
RC-929	CONE—6½-inch cone and voice coil assembly	1.00
RS-066	SPEAKER—6½-inch P.M. speaker (complete)	4.95
	SPEAKER ASSEMBLY FD-625	
RC-930	CONE—8-inch cone and voice coil assembly	1.25
RS-067	SPEAKER—8-inch P.M. speaker (complete)	5.95
	DIAL SCALE MECHANISM	
RB-604	BUSHING—Volume control cable drive bushing	.10
RC-840	CABLE—Gang condenser drive cable (Pkg. of 5)	.45
RC-841	CABLE—Volume control drive cable (Pkg of 5)	.45
RC-842	CABLE—Tone control drive cable (Pkg. of 5)	.40
RD-051	DIAL—Dial scale	1.00
*RD-030	DRUM—Condenser drive drum	.40
RP-073	POINTER—Volume or tone control pointer (Pkg. of 5)	.10
RP-074	POINTER—Dial scale pointer (Pkg. of 5)	.90
RP-075	PULLEY—Small drive cord idler pulley (Pkg. of 6)	.20

* Used on previous receivers.

(Prices subject to change without notice)

GENERAL ELECTRIC CO.

MODELS FD-62, FD-625
Schematic, Coils
Voltage, Resistance

MODELS FD-62 AND FD-625

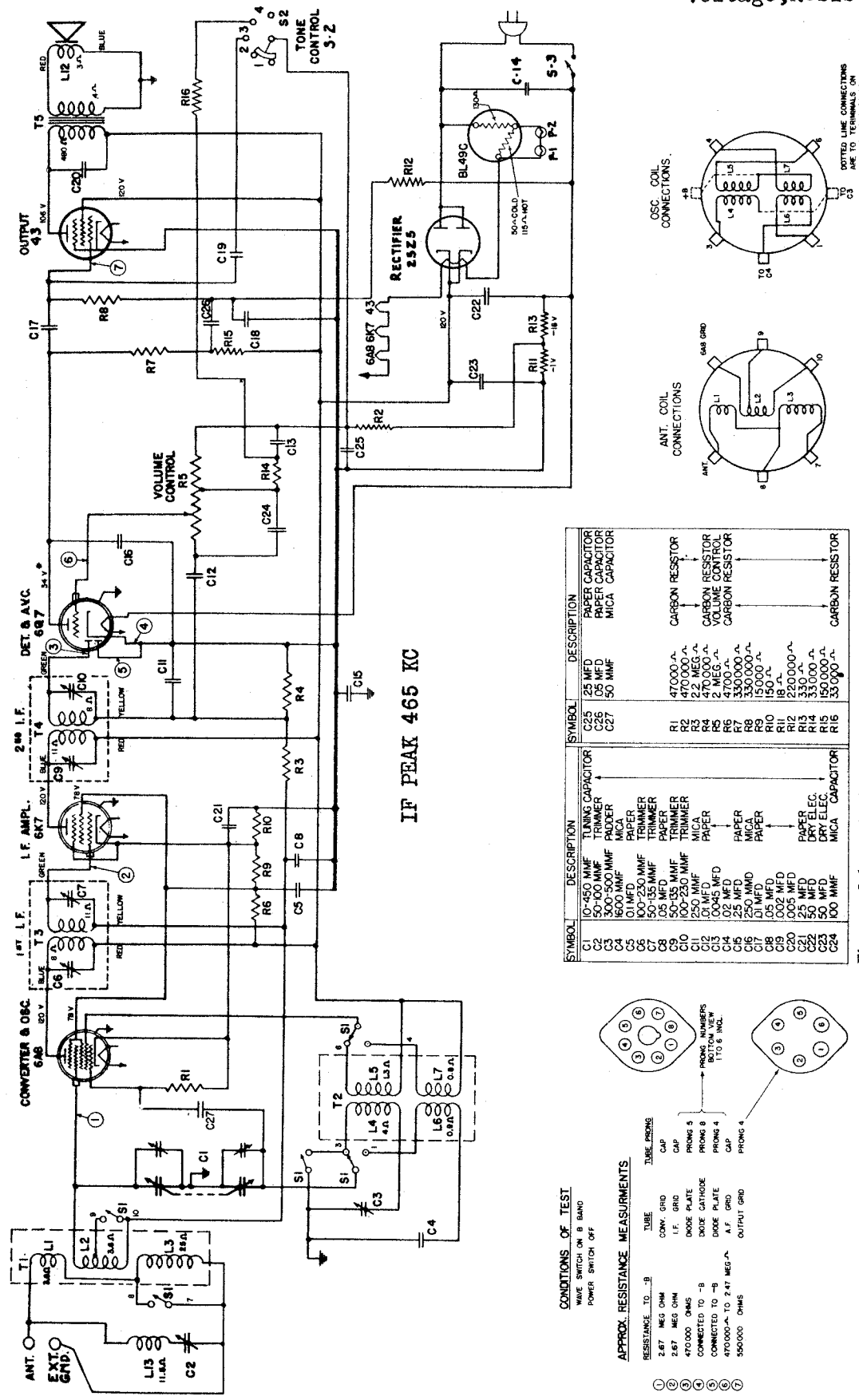

SYMBOL	DESCRIPTION		SYMBOL	DESCRIPTION	
C1	10-450 MMF	TUNING CAPACITOR	C25	.25 MFD	PAPER CAPACITOR
C2	50-100 MMF	TRIMMER	C26	.05 MFD	PAPER CAPACITOR
C3	300-500 MMF	PADDER	C27	50 MMF	MICA CAPACITOR
C4	1600 MMF	MICA			
C5	.01 MFD	PAPER			
C6	100-230 MMF	TRIMMER	R1	47000 Ω	CARBON RESISTOR
C7	50-135 MMF	TRIMMER	R2	470000 Ω	CARBON RESISTOR
C8	.05 MFD	PAPER	R3	2.2 MEG Ω	CARBON RESISTOR
C9	100-230 MMF	TRIMMER	R4	470000 Ω	VOLUME CONTROL
C10	250 MMF	MICA	R5	1 MEG Ω	CARBON RESISTOR
C11	.0045 MFD	PAPER	R6	47000 Ω	
C12	.02 MFD	PAPER	R7	330000 Ω	
C13	.25 MFD	MICA	R8	330000 Ω	
C14	250 MMD	PAPER	R9	150000 Ω	
C15	.01 MFD		R10	150 Ω	
C16	.05 MFD		R11	18 Ω	
C17	.002 MFD		R12	220000 Ω	
C18	.005 MFD		R13	330 Ω	
C19	.25 MFD	PAPER	R14	33000 Ω	
C20	.50 MFD	DRY ELEC.	R15	50000 Ω	CARBON RESISTOR
C21	.50 MFD	DRY ELEC.	R16	33000 Ω	
C22	100 MMF	MICA CAPACITOR			
C23					
C24					

Fig. 1. Schematic Circuit Diagram

CONDITIONS OF TEST
WAVE SWITCH ON B BAND
POWER SWITCH OFF

APPROX. RESISTANCE MEASURMENTS

	RESISTANCE TO -B	TUBE	TUBE PRONG
① ②	2.67 MEG OHM	CONV. GRID	CAP
① ②	2.67 MEG OHM	I.F. GRID	CAP
③ ④	470 000 OHMS	DIODE PLATE	PRONG 5
③ ④	CONNECTED TO -B	DIODE CATHODE	PRONG 8
⑤ ⑥ ⑦	CONNECTED TO -B	DIODE PLATE	PRONG 4
⑤ ⑥ ⑦	470000Ω TO 2.67 MEGΩ	A.F. GRID	CAP
⑤ ⑥ ⑦	550000 OHMS	OUTPUT GRID	PRONG 4

PRONG NUMBERS BOTTOM VIEW 1 TO 8 INCL.

©John F. Rider, Publisher

©John F. Rider, Publisher

SERVICE DATA

Physical Specifications

	FD-62	FD-625
Model	FD-62	FD-625
Height	8½ in.	38½ in.
Width	17⅛ in.	24 in.
Depth	7¼ in.	11⅛ in.
Wt. Packed	20 lb.	48 lb.

Tuning Control Drive Ratio ..... 8 to 1

Electrical Specifications

Power Supply (Volts)	Frequency (Cycles on A.C.)	Power (Watts)
100-125 A-C or D-C	40-100	50

Tuning Frequency Range

Band "B" ..... 540-1740 kc.
Band "C" ..... 2.2-7.0 mc.

Intermediate Frequency ..... 465 kc.

Electrical Power Output

Undistorted ..... 0.56 Watts
Maximum ..... 2.0 Watts

Tone Control ..... 4-point control

Loud-speaker—Permanent Magnet Dynamic

Cone: Model FD-62 ..... 6½ in.
Model FD-625 ..... 8 in.
Speaker Impedance ..... 3.5 ohms at 400 cycles

Tubes

Oscillator and Converter .... 6A8 Pentigrid converter
IF Amplifier ..... 6K7 Triple-grid Super-control Amplifier
Detector, AVC, and First Audio Amplifier ..... 6Q7 Duplex-Diode High-gain Triode
Audio Power Amplifier ..... 43 Power Amplifier Pentode
Rectifier ..... 25Z5 Half-wave Rectifier
Ballast tube BL-49C
Dial Lamp ..... MAZDA No. 46

GENERAL INFORMATION

These two-band receivers employ six General Electric tubes described above in a superheterodyne circuit which includes a single stage of I.F., automatic volume control, four-point tone control, wave trap and pentode output.

L1, L2 and L3 are the components of the "B" band antenna coil and are wound on the same coil form. When operating in the "C" band, L3 and a part of L2 are shorted out by the wave-change switch. L4-L5 and L6-L7 are the "B" and "C" band oscillator coils respectively and are wound on the same coil form. The "B" band oscillator grid coil is shorted out by a contact of S-1 when the set is operating on the "C" band.

The intermediate frequency amplifier consists of a 6K7 tube and two transformers, both of which have tuned primaries and secondaries.

The output of this amplifier is applied to one plate of the diode section of the 6Q7 tube. The diode serves as a detector and source of the automatic volume control voltage.

The audio voltage developed over the resistor R-4 is fed through the capacitor C-12 to the volume control R-5 which is in the grid circuit of the 6Q7 tube. The 6Q7 is resistance coupled to the 43 pentode output tube, which is in turn coupled through the output transformer to the "alnicore" permanent magnet dynamic speaker.

The 6A8 and 6K7 tubes have a combination of self and fixed bias which is the voltage drop over the resistor R-10. The 6Q7 and 43 tubes are supplied with semi-fixed bias obtained from the voltage drop over the resistors R-11 and R-13 in the B- lead.

One section of the BL49C ballast tube serves as a voltage dropping resistor in series with tube heaters. The second section of the BL49C is a low resistance shunt across the pilot lights. When the tubes reach their normal operating temperature this shunt across the pilot lights has more than doubled in resistance and thus allows the correct voltage drop across the pilot lights.

D-C Operation

When operating from a d-c source, it is necessary to insert the plug with proper polarity. If the set fails to function, after allowing time for the tubes to reach their operating temperature, reverse the power plug in the receptacle.

When the set is used on a d-c supply, the 25Z5 rectifier tube and the filter remain in the circuit and serve two purposes. If the power cord should be plugged in with incorrect polarity, the 25Z5 tube protects the filter condensers from damage. On correct d-c polarity the 25Z5 tube passes the d-c and the filter circuit aids in smoothing the supply voltage-thus minimizing line noise.

A-C Operation

When the set is used on alternating current, all d-c potentials are supplied by a 25Z5 rectifier tube and its associated filter circuit. The tube is connected as a half-wave rectifier.

If any hum is noticed when the set is used on a-c reverse the power plug in the receptacle. When the set has not been used for some time, a slight hum may be audible when the set is first turned on. This hum may not immediately clear up upon reversal of the power plug. However, it will probably be eliminated after approximately five minutes operation by which time the anode plates of the electrolytic capacitors will have re-formed.

TONE CONTROL

On the "Normal" position, No. 1 of the tone control bass compensation is obtained by the resistor R-14 and capacitor C-13 across the lower portion of the volume control. C-24 serves to inject higher frequencies at the tap.

The "Bass" position connects C-19 effectively across R-8 the grid resistor of the 43 tube thus limiting the high frequency input to that tube.

The "Foreign" position places R-16 in parallel with C-13 and thus reduces the bass compensation. C-19 is left connected across the grid circuit of the 43 tube and again limits the high frequency input to that tube. The result is a middle range response.

The "Speech" position removes C-19 from the circuit, so the high frequency response is the same as in the "Normal" position. However R-16 is left across C-13 thus removing the bass compensation. This arrangement adds clarity to programs predominating in speech.

ALIGNMENT PROCEDURE

In order to align these receivers properly, it is necessary to have the following test equipment:

1. A modulated test oscillator.
2. An output indicator such as an a-c voltmeter with a scale reading of 3 to 5 volts.
3. A screwdriver-type alignment tool.

To realize all the performance built into these receivers at the factory, alignment using cathode-ray equipment is to be preferred. The alignment procedure is given in table form on page 5 along with a trimmer location drawing Fig. 3. The "Dummy Antenna" is the capacitor or capacitor and resistor used in series with the signal generator antenna lead. The grid lead should not be removed from the tube to which the input signal is applied when aligning the I.F.

SOCKET VOLTAGES

Tube No.	Plate to B- VOLTS D-C		Screen Grid to B- VOLTS D-C		Cathode to B- VOLTS D-C		Cathode Current M.A.		Heater VOLTS
	A-C	D-C	A-C	D-C	A-C	D-C	A-C	D-C	
6A8 Oscillator	120	102	..	..	..	..	..	..	..
6A8 Converter	120	102	78	68	2.6	2.1	7.0	5.2	6.3
6K7 1st I.F. Amp	120	102	78	68	2.6	2.1	5.3	4.6	6.3
BL49C Ballast	Series section 52 V. drop		Lamp Shunt Section 9.0 Volt drop						
6Q7 Det and 1st Audio	34*	32*	..	..	.9	.8	.12	.10	6.3
43 Output	106	90	120	102	..	..	40.	33.	25.
25Z5 Rectifier	120 a-c	106 d-c	..	..	120	102	54.	44.	25.

Line voltage 120 A-C or D-C—No signal input—1000 ohms per-volt meter.
Dial pointer at 530 kc.
* Measured on 500 volt scale.
Note: The chassis is not the "B-" lead of the power supply. For voltage measurements, the "B-" may be taken at the green terminal of the electrolytic capacitor.

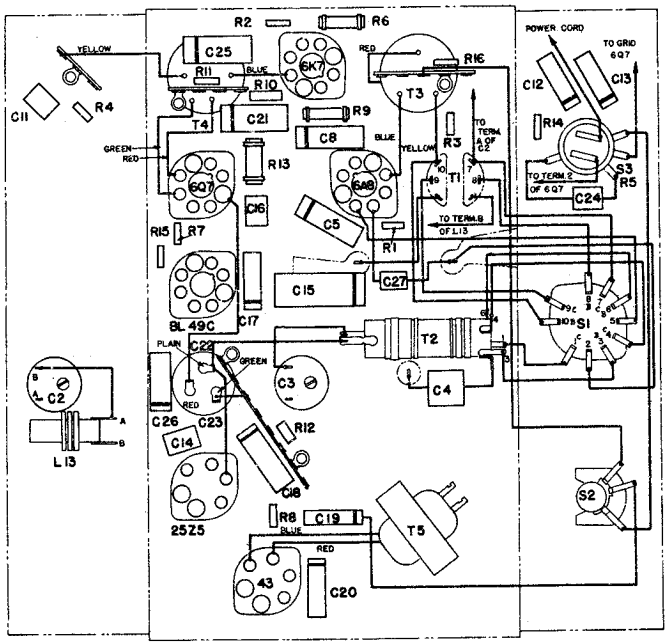

Fig. 2. Chassis Parts Layout

©John F. Rider, Publisher

GENERAL ELECTRIC CO.

MODELS F-74, F-77

Schematic, Resistance
Transformer Data.
Voltage

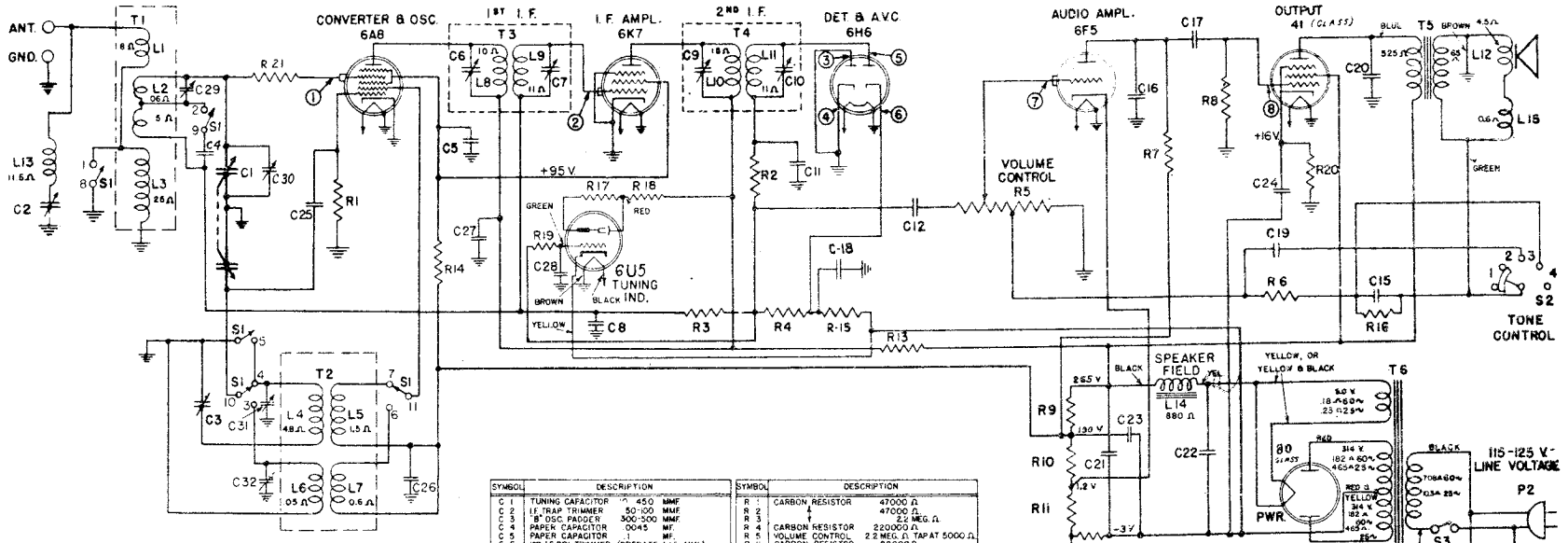

SYMBOL	DESCRIPTION		
C 1	TUNING CAPACITOR	450	MMF
C 2	I.F. TRAP TRIMMER	50-100	MMF
C 3	"B" OSC. PADDER	300-500	MMF
C 4	PAPER CAPACITOR	.0045	MF
C 5	PAPER CAPACITOR	.1	MF
C 6	1ST I.F. PRI. TRIMMER (OPERATE 145		MMF)
C 7	1ST I.F. SEC. TRIMMER (OPERATE 80		MMF)
C 8	PAPER CAPACITOR	.05	MF
C 9	2ND I.F. PRI. TRIMMER (OPERATE 75		MMF)
C 10	2ND I.F. SEC. TRIMMER (OPERATE 150		MMF)
C 11	MICA CAPACITOR	500	MMF
C 12	PAPER	.01	MF
C 13	PAPER	.01	MF
C 14	PAPER	.01	MF
C 15	PAPER	.1	MF
C 16	MICA	250	MMF
C 17	PAPER	.005	MF
C 18	PAPER	.1	MF
C 19	PAPER	.01	MF
C 20	PAPER	.008	MF
C 21	DRY ELECT.	8	MF
C 22	DRY ELECT.	.12	MF
C 23	DRY ELECT.	8	MF
C 24	DRY ELECT.	.10	MF
C 25	MICA	50	MMF
C 26	PAPER	.05	MF
C 27	PAPER	.1	MF
C 28	PAPER CAPACITOR	.02	MF
C 29	"D" ANT. TRIMMER	3-20	MMF
C 30	"B" ANT. TRIMMER	3-20	MMF
C 31	"B" OSC. TRIMMER	5-40	MMF
C 32	"D" OSC. TRIMMER	7-12	MMF

SYMBOL	DESCRIPTION	
R 1	CARBON RESISTOR	47000 Ω
R 2		47000 Ω
R 3		2.2 MEG. Ω
R 4	CARBON RESISTOR	220000 Ω
R 5	VOLUME CONTROL	2.2 MEG. Ω TAP AT 5000 Ω
R 6	CARBON RESISTOR	22000 Ω
R 7		220000 Ω
R 8		470 000 Ω
R 9		4 700 Ω
R 10		27000 Ω
R 11		180 Ω
R 12		47 Ω
R 13		2 700 Ω
R 14		18 000 Ω
R 15		220000 Ω
R 16		68000 Ω
R 17		1.0 MEG. Ω
R 18		15 000 Ω
R 19	CARBON RESISTOR	2.2 MEG. Ω
R 20	WIRE WOUND RESISTOR	410 Ω
R 21	CARBON RESISTOR	68 Ω
S 1	BAND CHANGE SWITCH	
S 2	TONE CONTROL SWITCH	
S 3	POWER SWITCH (PART OF VOLUME CONTROL)	

CONDITIONS OF TEST

WAVE SWITCH ON B BAND
POWER SWITCH OFF

APPROX. RESISTANCE MEASURMENTS

	RESISTANCE TO GROUND		TUBE	TUBE PRONG
①	2.64	MEG OHM	CONV. GRID	CAP
	2.64	MEG OHM	I.F. GRID	CAP
	GROUNDED		DIODE PLATE	PRONG 3
	GROUNDED		DIODE CATHODE	PRONG 4
	467,000	OHM	DIODE PLATE	PRONG 5
	220,000	OHM	DIODE CATHODE	PRONG 6
②	0-2 MEG OHM	VOL. CONT.	I.F. GRID	CAP
	470,000	OHM	OUTPUT GRID	PRONG 4

* MEASURED WITH VOLTMETER OF AT LEAST 500,000 OHMS RESISTANCE

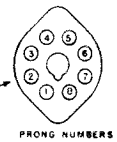

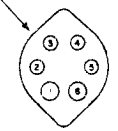

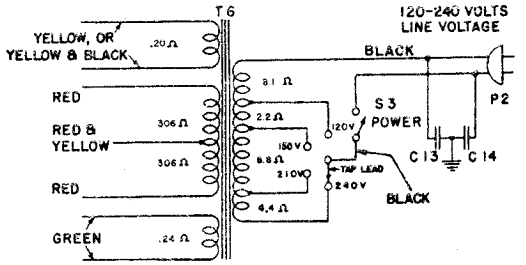

UNIVERSAL TRANSFORMER

ALL VOLTAGES TO GROUND UNLESS OTHERWISE SPECIFIED

ALL VOLTAGES MEASURED WITH ANT. & GND. TERMINALS SHORTED & 120 VOLTS ON PRI.

Tuning Frequency Range

Band "B".....540–1720 kc.
Band "D".....5,600–18,000 kc.

Intermediate Frequency.....465 kc.
Electrical Power Output
Undistorted.....2.5 watts
Maximum.....5.0 watts

Tone Control.....4-point control

Oscillator and Converter.....6A8 Pentagrid converter
I.F. Amplifier..6K7 Triple Grid Super-control Amplifier
Detector and AVC.....6H6 Twin diode
Tuning Indicator.....6U5 Electron-ray Tube
First Audio Amplifier.....6F5 High-gain Triode
Audio Power Amplifier.....41 Power Amplifier Pentode
Rectifier.....80 Full Wave Rectifier
Dial Lamp.....MAZDA No. 46

Loud-speaker—Electrodynamic

Cone: Model F-74.....8 inch
Model F-77.....12 inch

Voice coil impedance.....5.5 ohms at 400 cycles

MODELS F-74,F-77
Socket,Trimmers
Chassis Wiring

GENERAL ELECTRIC CO.

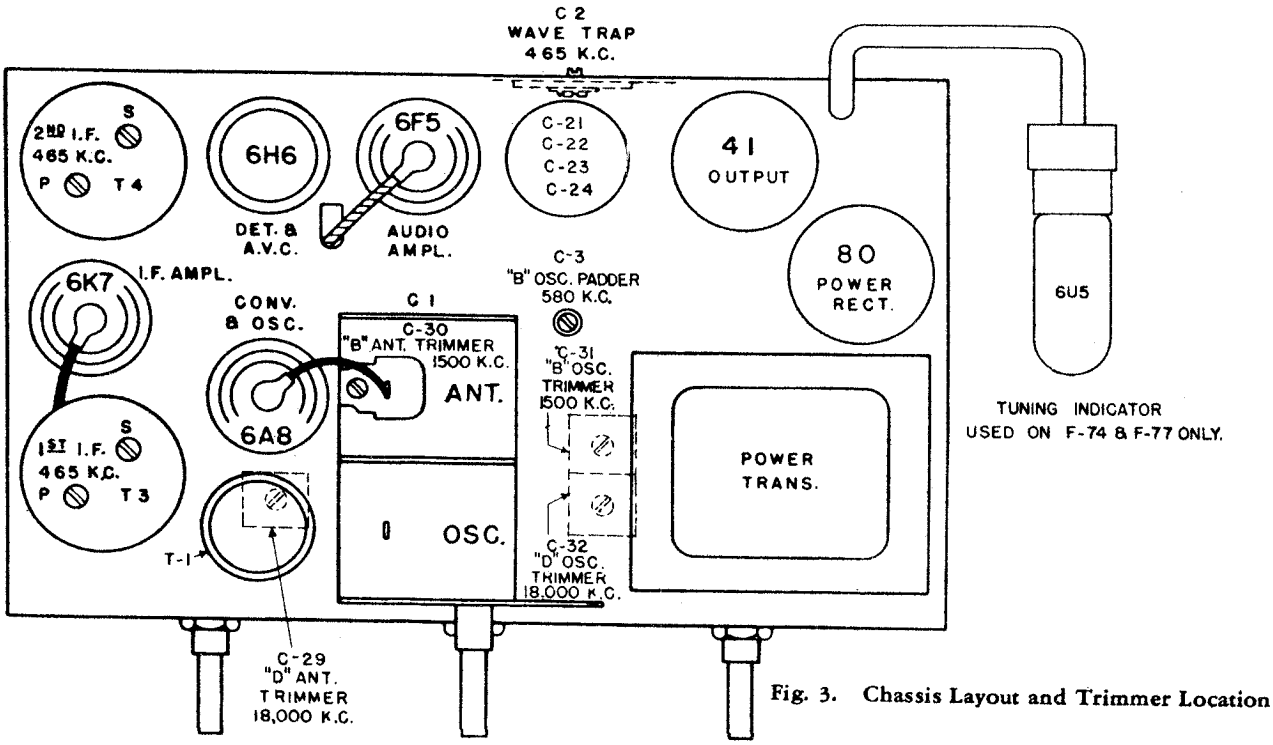

Fig. 3. Chassis Layout and Trimmer Location

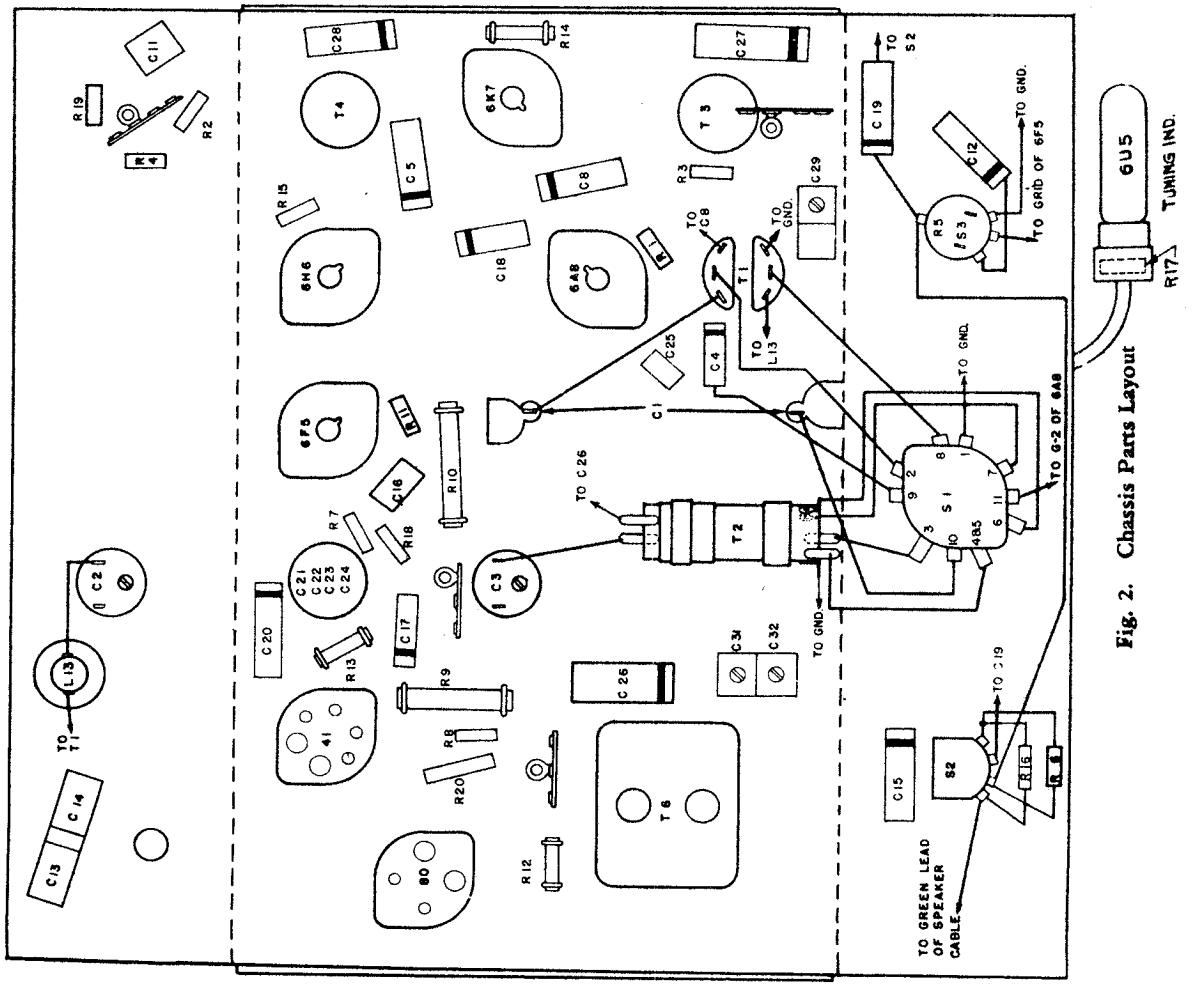

Fig. 2. Chassis Parts Layout

©John F. Rider, Publisher

©John F. Rider, Publisher

ALIGNMENT PROCEDURE

In order to align these receivers properly, it is necessary to have the following test equipment:

1. A modulated test oscillator.
2. An output indicator such as an a-c voltmeter with a scale reading of 3 to 5 volts.
3. A screwdriver-type alignment tool.

To realize all the performance built into these receivers at the factory, alignment using cathode-ray equipment is to be preferred. The alignment procedure is given in table form on page 5 along with a trimmer location drawing Fig. 3. The "Dummy Antenna" is the capacitor or capacitor and resistor used in series with the signal generator antenna lead. The grid lead should not be removed from the tube to which the input signal is applied when aligning the I.F.

Electrical Specifications

Rating Label	Power Supply (Volts)	Frequency (Cycles)	Power Consumption (Watts)
A	115–125	50–60	75
C	115–125	25–60	75
V	115–125 140–155 190–220 220–250	50–60	80

NOTE: Rating "V" receivers may be used on 40 cycle circuits provided the voltage does not exceed 110 volts on the 115-125 volt tap or above 200 volts on the 190-220 volt tap.

I.F. ALIGNMENT WITH OSCILLOSCOPE

Band Switch Setting	Input Freq.	Point of Input	Dummy Antenna	Trimmer	Comments
1. Band "B"	465 K.C. Sweep	I.F. Grid	0.5 Mfd. or Larger	2nd I.F. Sec. (C-10) 2nd I.F. Pri. (C-9)	Gang condenser plates wide open—connect audio input of oscilloscope to ground and to the junction of R-3 and R-4 of the 2nd I.F. transformer—Adjust trimmers in order mentioned for a single symmetrical curve of maximum amplitude.
2. Band "B"	465 K.C. Sweep	Converter Grid	.05 Mfd. or Larger	1st I.F. Sec. (C-7) 1st I.F. Pri. (C-6)	
3. Band "B"	465 K.C. Sweep	Antenna Post	250 Mmf. 400 ohms	Wave Trap Trimmer (C-2)	Adjust trimmer for minimum amplitude.

I.F. ALIGNMENT WITH OUTPUT METER

1. Band "B"	465 K.C. with Modulation	I.F. Grid	0.5 Mfd. or Larger	2nd I.F. Sec. (C-10) 2nd I.F. Pri. (C-9)	Gang condenser plates wide open—connect output meter across voice coil—keep input signal low and volume control on as far as possible. Adjust all trimmers for maximum output.
2. Band "B"	465 K.C. with Modulation	Converter Grid	.05 Mfd. or Larger	1st I.F. Sec. (C-7) 1st I.F. Pri. (C-6)	
3. Band "B"	465 K.C. with Modulation	Antenna Post	250 Mmf. 400 ohms	Wave Trap Trimmer (C-2)	Adjust trimmer for minimum output.

R.F. ALIGNMENT

1. Band "B"	....	....	....	....	Close gang condenser plates. Adjust pointer, to first line at left end of tuning scale.
2. Band "B"	1500 K.C. with Modulation	Antenna Post	250 Mmf. 400 ohms	Osc. (C-31) Ant. (C-30)	Connect output meter across voice coil—tone control on "bass" position—peak trimmers for maximum output with a low input signal.
3. Band "B"	580 K.C. with Modulation	Antenna Post	250 Mmf. 400 ohms	Osc. Padder (C-3)	Adjust padder for a maximum output meter indication in vicinity of 580 kc. while rocking the gang condenser.
4. Band "B"	Repeat Operation 2				
5. Band "D"	18 MC. with Modulation	Antenna Post	250 Mmf. 400 ohms	Osc. (C-32) Ant. (C-29)	Peak C-29 for maximum output while rocking the gang at the 18 mc. point. (*Start with C-29 at minimum capacity. The first peak is correct.*) The image of any signal on "D" band should be heard 930 kc. **above** the input signal when proper peak is obtained on oscillator trimmer C-32. Example: 12 mc. image—12.93 mc.

SOCKET VOLTAGES

Tube No.		Plate to Ground Volts D-C	Screen Grid to Ground Volts D-C	Cathode to Ground Volts D-C	Cathode Current M.A.	Heater Volts A-C
6A8	Oscillator	195	...	...	...	...
	Converter	240	95	0	12	6.3
6K7	I.F. Amplifier	240	95	0	9	6.3
6F5	Audio Amplifier	100*	...	1.2	0.3	6.3
41	Output	240	250	16	35	6.3
6U5	Tuning Indicator	110*	210 target	−3	4	6.3
80	Power Rectifier	600/300 RMS	...	...	60	5.0

A-C line voltage 115. No signal input. 1000 ohms per volt meter. Dial pointer at 530 kc. on "B" band.
* Measured on 500-volt scale.

REPLACEMENT PARTS LIST
MODELS F-74 AND F-77

Insist on genuine factory-tested parts which may be purchased from authorized dealers

Stock No.	Description	List Price
	CHASSIS ASSEMBLY	
*RB-040	BOARD—Terminal board (3 lugs)	$0.10
*RB-041	BOARD—Terminal board (2 lugs) (on rear wall)	.10
RB-072	BOARD—Terminal board (2 lugs)	.10
RB-073	BOARD—Terminal board (4 lugs)	.10
RB-158	BRACKET—Tuning indicator bracket	.15
*RC-017	CAPACITOR—.0045 mfd. 200 V. paper (C-4)	.25
*RC-023	CAPACITOR—.005 mfd. 600 V. paper (C-17)	.25
*RC-031	CAPACITOR—.008 mfd. 1600 V. paper (C-20)	.25
*RC-042	CAPACITOR—.01 mfd. 1000 V. paper (C-12, C-19)	.30
*RC-080	CAPACITOR—.02 mfd. 400 V. paper (C-28)	.25
RC-091	CAPACITOR—.05 mfd. 400 V. paper (C-8, C-26)	.25
*RC-123	CAPACITOR—.1 mfd. 400 V. paper (C-5, C-15, C-18, C-27)	.35
*RC-213	CAPACITOR—50 mmf. mica (C-25)	.25
*RC-259	CAPACITOR—250 mmf. mica (C-16)	.30
*RC-296	CAPACITOR—500 mmf. mica (C-11)	.25
RC-589	CAPACITOR—Dry electrolytic 8 mfd. 450 V.-12 mfd. 450 V.-8 mfd. 350 V.-10 mfd. 25 V. (C-21, C-22, C-23, C-24)	2.10
*RC-608	CAPACITOR—"B" band osc. padding condenser 300-500 mmf. (C-3)	.45
*RC-609	CAPACITOR—Wave trap trimmer	.40
RC-644	CAPACITOR—1st or 2nd I.F. transformer double trimmer condenser (C-6, C-7, C-9, C-10)	.40
RC-664	CAPACITOR—"B" and "D" band osc. trimmer (C-31, C-32)	.35
RC-663	CAPACITOR—"D" band ant. trimmer 3-20 mmf. (C-29)	.20
RC-721	CAPACITOR—Two gang tuning condenser and "B" band ant. trimmer (C-1, C-30)	3.75
*RC-755	CAPACITOR—Line capacitor 250 V. A.C. paper (C-13, C-14)	.40
RC-864	CORD—Power cord	.50
RC-8016	CABLE—Tuning indicator cable	.55
RC-8022	CABLE—Speaker cable and female socket	.60
RD-202	DRIVE—Planetary reduction drive	1.00
RE-014	ESCUTCHEON—Escutcheon plate and window	1.75
RE-021	ESCUTCHEON—Tuning indicator escutcheon	.35
*RG-001	CLIP—Control grid clip (Pkg. of 5.)	.10
RG-301	GROMMET—Grommet and metal washer for tuning shaft (Pkg. of 5)	.20
RK-017	KNOB—Control knob (Pkg. of 5)	.40
RK-018	KNOB—Band change knob (Pkg. of 5)	.40
RL-052	COIL—"B" and "D" band ant. coil (T-1)	1.20
RL-256	COIL—"B" and "D" band osc. coil (T-2)	1.00
*RL-602	WAVE TRAP—Wave trap (coil only) (L-13)	.50
RL-920	LAMP—Dial lamp 6.3 V. .25 amps (Pkg. of 10)	1.50
RQ-675	RESISTOR—4,700 ohms 2 watt carbon (R-9)	.20
RQ-693	RESISTOR—27,000 ohms 2 watt carbon (R-10)	.20
RQ-1227	RESISTOR—47 ohms ½ watt carbon (R-12) (Pkg. of 5)	.70
RQ-1231	RESISTOR—68 ohms ½ watt carbon (R-21) (Pkg. of 5)	.70
RQ-1241	RESISTOR—180 ohms ½ watt carbon (R-11) (Pkg. of 5)	.70
RQ-1269	RESISTOR—2,700 ohms ½ watt carbon (R-13) (Pkg. of 5)	.70
RQ-1287	RESISTOR—15,000 ohms ½ watt carbon (R-18) (Pkg. of 5)	.70
RQ-1289	RESISTOR—18,000 ohms ½ watt carbon (R-14) (Pkg. of 5)	.70
RQ-1291	RESISTOR—22,000 ohms ½ watt carbon (R-6) (Pkg. of 5)	.70
RQ-1299	RESISTOR—47,000 ohms ½ watt carbon (R-1, R-2) (Pkg. of 5)	.70
RQ-1303	RESISTOR—68,000 ohms ½ watt carbon (R-16) (Pkg. of 5)	.70
RQ-1315	RESISTOR—220,000 ohms ½ watt carbon (R-4, R-7, R-15) (Pkg. of 5)	.70
RQ-1323	RESISTOR—470,000 ohms ½ watt carbon (R-8) (Pkg. of 5)	$0.70
RQ-1331	RESISTOR—1.0 meg. ½ watt carbon (R-17) (Pkg. of 5)	.70
RQ-1339	RESISTOR—2.2 meg ½ watt carbon (R-3, R-19) (Pkg. of 5)	.70
RR-727	RESISTOR—410 ohms 1½ watt moulded (R-20)	.15
RS-141	SHIELD—1st I.F. transformer shield	.15
RS-142	SHIELD—2nd I.F. transformer shield	.15
RS-178	SHIELD—Tuning indicator light shield (Pkg. of 5)	.05
*RS-200	SOCKET—Octal tube socket (Pkg. of 5)	.75
RS-215	SOCKET—6-prong tube socket (Pkg. of 5)	.60
RS-217	SOCKET—4-prong tube socket (Pkg. of 5)	.50
*RS-322	SWITCH—Band change switch (S-1)	.75
RS-347	SWITCH—Tone control switch (S-2)	.50
RT-241	TRANSFORMER—1st I.F. transformer (T-3)	1.60
RT-242	TRANSFORMER—2nd I.F. transformer (T-4)	1.65
RT-0712	TRANSFORMER—Power transformer 50-60 cycles 115-125 V (T-6)	5.30
RT-0713	TRANSFORMER—Power transformer 25-60 cycles 115-125 V. (T-6)	8.10
RT-0714	TRANSFORMER—Power transformer 50-60 cycles, Universal 115-250 V. (T-6)	8.20
RV-028	VOLUME CONTROL—2 meg potentiometer and power switch (tapped at 5000 ohms) (R-5, S-3)	.95
*RW-101	WASHER—Felt washer for knobs (Pkg. of 10)	.45
*RX-016	ASSEMBLY—Gang condenser mounting cushions and studs	.30
RX-032	ASSEMBLY—Chassis mounting screws, washers and rubber cushions	.10
	SPEAKER ASSEMBLY F-74	
RC-924	CONE—8-inch cone and voice coil assembly	.90
*RC-990	CLAMP—Voice coil spider clamp	.05
RP-015	PLUG—Male speaker plug	.20
RS-063	SPEAKER—8-inch speaker (complete)	6.10
RS-416	SPRING—Voice coil leads spring (Pkg. of 2)	.10
RT-428	TRANSFORMER—Output transformer	1.20
	SPEAKER ASSEMBLY F-77	
*RC-925	CONE—12-in. cone and voice coil assembly	1.25
*RC-991	CLAMP—Spider clamp	.05
*RP-015	PLUG—Male speaker plug	.20
RS-057	SPEAKER—12-in. type speaker (complete)	7.10
*RS-416	SPRING—Voice coil leads spring (Pkg. of 2)	.10
RX-030	ASSEMBLY—Speaker mtg. cushions and nuts	.15
RT-421	TRANSFORMER—Output transformer (T-5)	1.30
	DIAL SCALE MECHANISM	
RB-604	BUSHING—Volume control cable drive bushing	.10
RC-840	CABLE—Dial pointer drive cable (Pkg. of 5)	.55
RC-841	CABLE—Volume control pointer drive cable (Pkg. of 5)	.45
RC-842	CABLE—Tone control pointer drive cable (Pkg. of 5)	.40
RD-030	DRUM—Condenser drive drum	.40
RD-060	DIAL—Dial scale	1.15
RP-073	POINTER—Volume or tone control pointer (Pkg. of 5)	.10
RP-074	POINTER—Dial scale pointer (Pkg. of 5)	.90
RP-075	PULLEY—Small drive cord idler pulley (Pkg. of 6)	.20
RP-076	PULLEY—Tone control cord drive pulley	.15
RS-218	SOCKET—Lamp socket assembly	.10
RS-426	SPRING—Volume or tone control cable tension spring (Pkg. of 5)	.10
RS-432	SPRING—Tuning drive cable tension spring (Pkg. of 5)	.20

*Used on previous receivers.

(Prices subject to change without notice)

October, 1937 (20M)

Always Insist on General Electric Pre-tested Tubes

MODELS F-80 AND F-85

I.F. ALIGNMENT WITH OSCILLOSCOPE

Band Switch Setting	Input Freq.	Point of Input	Dummy Antenna	Trimmer	Comments
1. Band "B"	465 K.C. Sweep	2nd I.F. Grid	.05 Mfd.	3rd I.F. Sec. (C-22) 3rd I.F. Pri. (C-21)	Gang condenser plates wide open—connect vertical input of oscilloscope to ground and the junction of C-24 and R-9 on 3rd I.F. transformer. Adjust trimmers for a single symmetrical curve of maximum amplitude. The resulting curve with input at converter grid is shown in Figure 8.
2. Band "B"	465 K.C. Sweep	1st I.F. Grid	.05 Mfd.	2nd I.F. Sec. (C-20) 2nd I.F. Pri. (C-19)	
3. Band "B"	465 K.C. Sweep	Converter Grid	.05 Mfd.	1st I.F. Sec. (C-18) 1st I.F. Pri. (C-17)	
4. Band "B"	465 K.C. Sweep	Antenna Post	250 Mmf. 400 ohms	Wave Trap Trimmer (C-4)	Adjust for minimum amplitude.

I.F. ALIGNMENT WITH OUTPUT METER

1. Band "B"	465 K.C. with Modulation	2nd I.F. Grid	.05 Mfd.	3rd I.F. Sec. (C-22) 3rd I.F. Pri. (C-21)	Gang condenser plates wide open—connect output meter across voice coil—keep input signal low and volume control at maximum. Adjust all trimmers in order mentioned for maximum output. Do not attempt an overall realignment after stage by stage alignment has been accomplished.
2. Band "B"	465 K.C. with Modulation	1st I.F. Grid	.05 Mfd.	2nd I.F. Sec. (C-20) 2nd I.F. Pri. (C-19)	
3. Band "B"	465 K.C. with Modulation	Converter	.05 Mfd.	1st I.F. Sec. (C-18) 1st I.F. Pri. (C-17)	
4. Band "B"	465 K.C. with Modulation	Antenna Post	250 Mmf. 400 ohms	Wave Trap Trimmer (C-4)	Adjust for minimum output.

R.F. ALIGNMENT

1. Band "B"					Close gang plates—adjust pointer to first line at left end of tuning scale.
2. Band "D"	18 M.C. with Modulation	Antenna Post	250 Mmf. 400 ohms	Osc. (C-3) Ant. (C-2)	Connect output meter across voice coil—tone control on "Bass" position. The image of any "D" band signal should be heard 930 K.C. above signal input when (C-3) is on proper peak. Example: 15 M.C. image—15,930 K.C. Peak (C-2) while rocking the gang condenser.
3. Band "C"	No adjustments necessary.				
4. Band "B"	1500 K.C. with Modulation	Antenna Post	250 Mmf. 400 ohms	Osc. (C-12) Ant. (C-7)	Peak trimmers for maximum output with a low input signal.
5. Band "B"	580 K.C. with Modulation	Antenna Post	250 Mmf. 400 ohms	Osc. Padder (C-13)	Adjust padder for maximum output in vicinity of 580 K.C. while rocking the gang condenser.
6. Band "B"	1500 K.C. with Modulation	Antenna Post	250 Mmf. 400 ohms	Osc. (C-12) Ant. (C-7)	Peak trimmers for maximum output with a low input signal.

SOCKET VOLTAGES

Tube No.	Plate to Ground Volts D-C	Screen Grid to Ground Volts D-C	Cathode to Ground Volts D-C	Cathode Current M.A.	Heater Volts A-C
6A8 Oscillator	190	...	...	..	...
6A8 Converter	235	100	0	11	6.3
6K7 1st I.F. Amplifier	235	105	0	5	6.3
6K7 2nd I.F. Amplifier	235	105	0	7	6.3
6H6 Detector and A.V.C.	0 sig. −5 delay	...	0 sig. −5 delay	0 0	6.3
6U5 Indicator	110 *	Target 210	−5.0	4	6.3
6F5 Audio Amplifier	120 *	...	1.2	0.2	6.3
42 Output	250	265	16	39	6.3
80 Power Rectifier	640/320 RMS	..	335 D-C	70	5.0

A-C line voltage 120—No signal input—1000 ohms per volt-meter—dial pointer at 530 K.C.
* Measured on 500-volt scale.

Stock No.	Description	List Price
*RB-008	BOARD—Terminal Board (2 Terminals)	$0.10
*RB-026	BOARD—Ant. & Gnd. Terminal Board	.10
RB-158	BRACKET—Tuning indicator bracket	.15
*RC-017	CAPACITOR—.0045 Mfd., 200 V. Paper (C-6)	.25
*RC-023	CAPACITOR—.005 Mfd., 600 V. Paper (C-24)	.25
*RC-034	CAPACITOR—.01 Mfd., 200 V. Paper (C-26) (Close Tolerance)	.25
*RC-042	CAPACITOR—.01 Mfd., 1000 V. Paper (C-5, C-36)	.30
*RC-080	CAPACITOR—.02 Mfd., 400 V. Paper (C-27, C-28)	.25
*RC-091	CAPACITOR—.05 Mfd., 400 V. Paper (C-11, C-15, C-23)	.30
RC-103	CAPACITOR—0.1 Mfd., 200 V. Paper (Close Tolerance) (C-25)	.30
*RC-123	CAPACITOR—.1 Mfd., 400 V. Paper (C-16, C-30, C-37)	.35
*RC-213	CAPACITOR—50 Mmf. Mica (C-14)	.25
*RC-259	CAPACITOR—250 Mmf. Mica (C-29 C-35)	.30
RC-339	CAPACITOR—1300 Mmf. Mica (C-10)	.35
RC-575	CAPACITOR—Dry Electrolytic; 8 Mfd., 350 V; 10 Mfd., 25 V; 8 Mfd., 400 V; 12 Mfd., 450 V; (C-31, C-32, C-33, C-34)	2.10
*RC-618	CAPACITOR—"B" Band Osc. Trimmer 5-45 Mmf. (C-7, C-12)	.25
RC-634	CAPACITOR—"B" Band Osc. Padder 350-550 Mmf. (C-15)	.35
RC-635	CAPACITOR—Double Trimmer, 1st or 2nd I.F. Transformer (C-18, C-17, C-19, C-20)	.45
*RC-637	CAPACITOR—Double Trimmer, 3rd I.F. Transformer (C-21, C-22)	.60
*RC-710-22	CONDENSER—2-gang Tuning Condenser (C-1, C-2, C-3)	3.60
*RC-754	CAPACITOR—Line Filter Capacitor .01-.01 Mfd., 250 V., A.C. (C-8, C-9)	.40
RC-843	CABLE—Speaker Cable and Plug	.35
RC-8016	CABLE—Tuning indicator cable	.55
RC-865	CORD—Power Cord and Plug	.45
RD-203	DRIVE—Planetary reduction drive	1.10
RE-014	ESCUTCHEON—Escutcheon Plate Assembly	1.75
RE-021	ESCUTCHEON—Tuning indicator escutcheon	.35
*RF-010	FOOT—Mounting Foot Assembly (Pkg. of 2)	.30
*RG-001	GRID CLIP—Control Grid Clip (Pkg. of 5)	.10
RG-309	GROMMET—Tuning Shaft Grommet (Pkg. of 5)	.20
RK-017	KNOB—Control Knob (Pkg. of 5)	.40
RK-018	KNOB—Wave Change Switch Knob (Pkg. of 5)	.40
RL-043	COIL—"B," "C," and "D" Band Ant. Coil (T-3)	1.50
RL-245	COIL—"D" Band Oscillator Coil (T-4)	.65
RL-246	COIL—"B" and "C" Band Oscillator Coil (T-5)	1.05
RL-920	LAMP—Dial Lamp, 6.3 V., 0.25 Amp. (Pkg. of 10)	1.50
RQ-1225	RESISTOR—39 Ohms, ½ W. Carbon (R-16) (Pkg. of 5)	.70
RQ-1267	RESISTOR—2,200 Ohms, ½ W. Carbon (R-4) (Pkg. of 5)	.70
RQ-1273	RESISTOR—3,900 Ohms, ½ W. Carbon (R-15) (Pkg. of 5)	.70
RQ-1275	RESISTOR—4,700 Ohms, ½ W. Carbon (R-7) (Pkg. of 5)	.70
RQ-1287	RESISTOR—15,000 Ohms, ½ W. Carbon (R-18) (Pkg. of 5)	.70
RQ-1291	RESISTOR—22,000 Ohms, ½ W. Carbon (R-13) (Pkg. of 5)	.70
RQ-1299	RESISTOR—47,000 Ohms, ½ W. Carbon (R-2) (Pkg. of 5)	.70
RQ-1303	RESISTOR—68,000 Ohms, ½ W. Carbon (R-8, R-14) (Pkg. of 5)	.70
RQ-1307	RESISTOR—.1 Meg., ½ W. Carbon (R-6) (Pkg. of 5)	.70
RQ-1315	RESISTOR—220,000 Ohms, ½ W. Carbon (R-5, R-9) (Pkg. of 5)	.70
RQ-1323	RESISTOR—470,000 Ohms, ½ W. Carbon (R-3) (Pkg. of 5)	.70
RQ-1331	RESISTOR—1.0 Megohm, ½ W. Carbon (R-10) (Pkg. of 5)	.70
RQ-1339	RESISTOR—2.2 Megohm, ½ W. Carbon (R-19) (Pkg. of 5)	.70
RQ-1349	RESISTOR—5.6 Megohms, ½ W. Carbon (R-22) (Pkg. of 5)	$0.70
RR-726	RESISTOR—Candohm Tapped Resistor (R-11)	.65
RR-727	RESISTOR—410 Ohms, 1½ W. Molded Resistor (R-12)	.15
RS-172	SHIELD—Shield for 1st, 2nd or 3rd I.F. Transformer	.25
RS-174	SHIELD—6F5 Grid Shield Cap (Pkg. of 5)	.25
*RS-200	SOCKET—8-pin Octal Base Socket (Pkg. of 5)	.75
RS-215	SOCKET—6-prong Tube Socket (Pkg. of 5)	.60
RS-217	SOCKET—4-prong Tube Socket (Pkg. of 5)	.50
RS-348	SWITCH—Tone Control and Power Switch (S-2, S-3)	.85
RS-349	SWITCH—Band Change Switch (S-1)	1.30
RT-078	TRANSFORMER—Power Transformer, 115-125 V., 60 cycles (T-2)	4.30
RT-0710	TRANSFORMER—Universal Power Transformer (T-2)	7.40
RT-0711	TRANSFORMER—Power Transformer, 115-125 V., 25-60 cycles (T-2)	7.60
*RT-232	TRANSFORMER—3rd I.F. Transformer (Complete) (L-8, C-21, C-22)	1.75
RT-233	TRANSFORMER—1st or 2nd I.F. Transformer (Complete) (L-6, C-17, C-18; L-7, C-19, C-20)	1.50
RV-029	VOLUME CONTROL—2 Megohm Volume Control (R-1)	.75
RW-015	WINDOW—Escutcheon Window with Rubber Mountings	.45
*RW-101	WASHER—Felt Washers for Knobs (Pkg. of 10)	.45
*RW-400	WAVE TRAP—Wave Trap Complete (L-1, C-4)	.80
*RX-016	ASSEMBLY—Gang Condenser Mounting Assembly	.30
RX-021	ASSEMBLY—Chassis Mounting Assembly	.10
	SPEAKER ASSEMBLY F-80	
RC-924	CONE—8-in. Cone and Voice Coil Assembly	.90
*RC-990	CLAMP—Voice Coil Spider Clamp	.05
*RP-015	PLUG—Male Speaker Plug	.20
RS-056	SPEAKER—8-inch Speaker (Complete)	5.90
*RS-416	SPRING—Voice Coil Leads Spring (Pkg. of 2)	.10
RT-421	TRANSFORMER—Output Transformer	1.30
	SPEAKER ASSEMBLY F-85	
RC-925	CONE—12-in. Cone and Voice Coil Assembly	1.25
*RC-991	CLAMP—Voice Coil Spider Clamp	.05
*RP-015	PLUG—Male Speaker Plug	.20
RS-057	SPEAKER—12-in. Speaker Complete	6.80
*RS-416	SPRING—Voice Coil Leads Spring (Pkg. of 2)	.10
RT-421	TRANSFORMER—Output Transformer	1.30
	DIAL SCALE MECHANISM	
RB-155	BRACKET—Band Change Bracket	.05
RB-604	BUSHING—Volume Control Cable Drive Bushing	.10
RC-840	CABLE—Gang Condenser Drive Cable (Pkg. of 5)	.55
RC-844	CABLE—Tone Control Cable (Pkg. of 5)	.45
RC-845	CABLE—Volume Control Cable (Pkg. of 5)	.45
*RD-030	DRUM—Condenser Drive Drum	.40
RD-052	DIAL—Dial Scale	1.40
RP-073	POINTER—Volume or Tone Control Pointer (Pkg. of 5)	.10
RP-075	PULLEY—Small Drive Cord Idler Pulley (Pkg. of 6)	.20
RP-076	PULLEY—Tone Control Drive Pulley	.15
RP-077	POINTER—Dial Scale Pointer (Pkg. of 5)	.90
RR-910	REFLECTOR—Lamp Reflector	.10
RS-218	SOCKET—Lamp Socket Assembly	.10
RS-425	SPRING—Tuning Drive Cord Tension Spring (Pkg. of 5)	.10
RS-426	SPRING—Tone or Volume Control Drive Cord Spring (Pkg. of 5)	.10
RX-022	ASSEMBLY—Band Indicator Assembly (Includes Cord, Pointer, and Spring)	.20

*Used on previous receivers.

(Prices subject to change without notice)

October, 1937 (20M)

©John F. Rider, Publisher

GENERAL ELECTRIC CO.

MODELS F-80, F-85
Schematic, Socket
Trimmers, Transformer
Resistance, Voltage

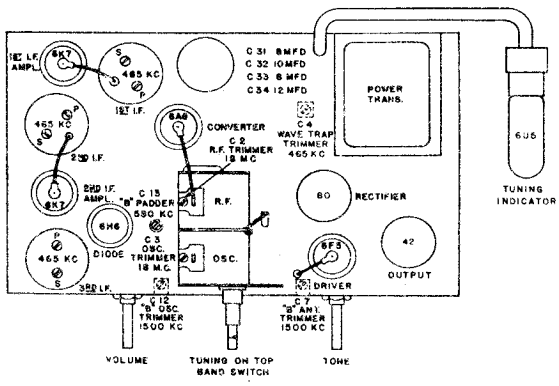

Fig. 4. Chassis Layout and Trimmer Location

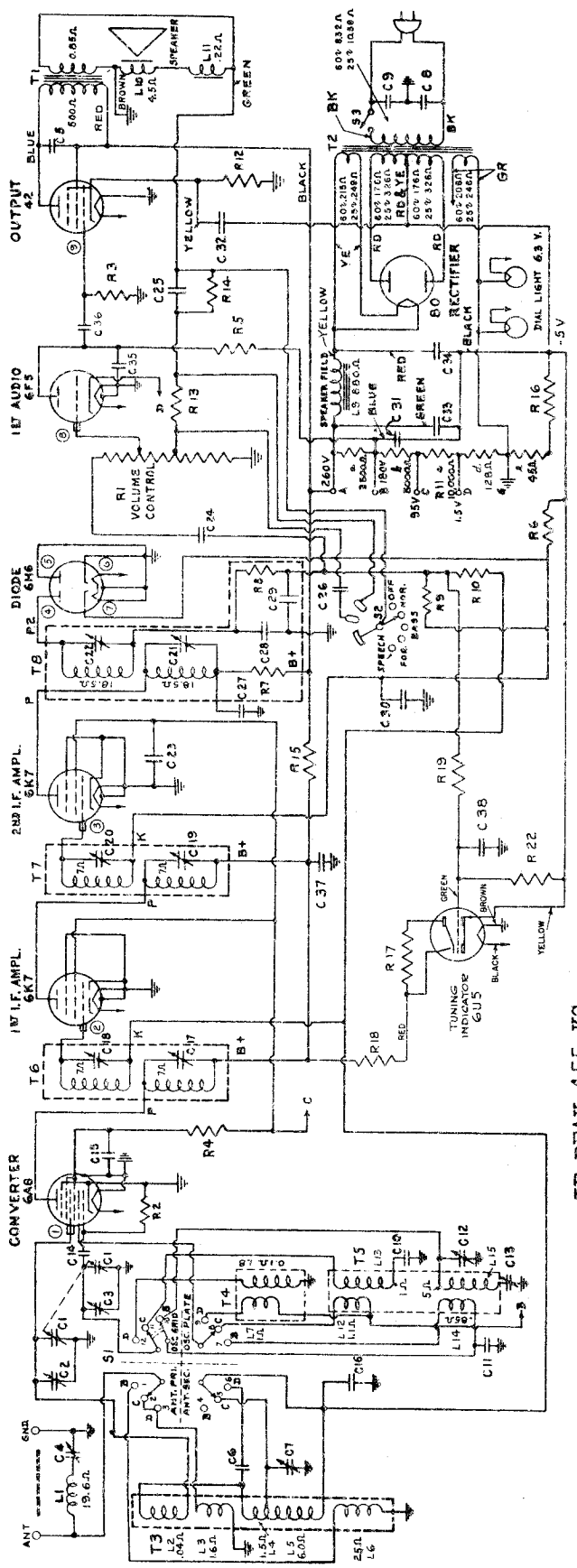

Fig. 1. Schematic Diagram

MODELS F-80 AND F-85

SYMBOL	DESCRIPTION	
R1	VOLUME CONTROL 2 MEGA TAP AT 500Ω	
R2	CARBON RESISTOR	470Ω
R3		47000Ω
R4		2200Ω
R5		22000Ω
R6		47000Ω
R7		68000Ω
R8		68000Ω
R9		2.2 MEGΩ
R10		1 MEGΩ
R11	CARBON	410Ω
R12	CANDOHM	2800Ω
R13	WIREWOUND	6800Ω
R14	CARBON	22Ω
R15		1.5 MEGΩ
R16		22Ω
R17		2.2 MEGΩ
R18		5.6 MEGΩ
R19		
R22	CARBON RESISTOR	
T1	OUTPUT TRANSFORMER	
T2	POWER	
T3	B C OSC. ANT.	COIL
T4	B C OSC	
T5	1ST I.F.	
T6	2ND I.F.	
T7	I.F. TRANSFORMER	
T8	3RD	
L9	WAVE TRAP	COIL
L10	SPEAKER FIELD	COIL
L11	VOICE	
	HUM	
S1	BAND CHANGE SWITCH	
S2	TONE CONTROL SWITCH	
S3	POWER SWITCH	

SYMBOL	DESCRIPTION	
C1	TUNING TRIM.	CAPACITOR 10-430 MMF
C2	OSC. TRIM.	2-20 MMF
C3	WAVE TRAP TRIM.	2-20 MMF
C4	PAPER	.75 MMF
C5	B ANT TRIM.	5-45 MMF
C6	PAPER	.0045 MF
C7	MICA	.01 MF
C8	PAPER	.1300 MMF
C9	MICA	.01 MF
C10	B OSC. TRIM.	5-25 MMF
C11	PADDER	.05 MF
C12	B PADDER TRIM.	5-25 MMF
C13	MICA	330-530 MMF
C14	PAPER	.05 MF
C15	PAPER	.55 MF
C16	PAPER	.1 MF
C17	1ST I.F. PRI. TRIM.	335 MMF
C18	1ST I.F. SEC. TRIM.	335 MMF
C19	2ND I.F. PRI. TRIM.	335 MMF
C20	2ND I.F. SEC. TRIM.	335 MMF
C21	3RD I.F. PRI. TRIM.	190 MMF
C22	3RD I.F. SEC. TRIM.	190 MMF
C23	PAPER	.05 MF
C24		.005 MF
C25	PAPER	.1 MF
C26	PAPER	.01 MF
C27	MICA	.02 MF
C28	PAPER	.25 MMF
C29	PAPER	.01 MF
C30	PAPER	.1 MF
C31	DRY ELECT.	8 MF
C32	+	10 MF
C33	DRY ELECT.	6 MF
C34	MICA	250 MMF
C35	PAPER	.01 MF
C36	PAPER	.02 MF
C37	PAPER	.02 MF
C38	CAPACITOR	.02 MF

CONDITIONS OF TEST
WAVE SWITCH ON B BAND
POWER SWITCH OFF

APPROXIMATE RESISTANCE MEASUREMENTS

	RESISTANCE TO GROUND	TUBE	SOCKET PRONG
1	1.2 MEGΩ	CONV. GRID	CAP
2	1.2 MEGΩ	1ST I.F. GRID	CAP
3	100,000Ω	2ND I.F. GRID	CAP
4	290,000Ω	DIODE PLATE	PRONG 3
5	1.2 MEGΩ	DIODE PLATE	PRONG 5
6	100,000Ω	DIODE CATH.	PRONG 6
7	GROUNDED	DIODE CATH.	PRONG 8
8	0-2 MEGΩ VOL. CONT.	1ST AUDIO GRID	CAP
9	470,000Ω	OUTPUT GRID	PRONG 4

ALL VOLTAGES TO GROUND UNLESS OTHERWISE SPECIFIED.
ALL VOLTAGES MEASURED WITH ANT. & GND. TERMINALS SHORTED & 120V ON PRI.

PRONG NUMBERS BOTTOM VIEW 1T0 8 INCL

PRONG NUMBERS BOTTOM VIEW FOR 9

UNIVERSAL TRANSFORMER
120-240 VOLTS

©John F. Rider, Publisher

©John F. Rider, Publisher

SERVICE DATA

RFS-80 Radio Receivers, Models F-80 and F-85

Physical Specifications

	F-80	F-85
Model		
Height	11 1/16 in.	40 in.
Width	20 3/4 in.	25 7/8 in.
Depth	9 in.	12 1/4 in.
Wt. Packed	29 pounds	68 pounds

Tuning Control Drive Ratio

Fast Tuning ..... 8 to 1
Vernier Tuning ..... 40 to 1

Electrical Specifications

Rating Label	Power Supply (Volts)	Frequency (Cycles)	Power Consumption (Watts)
A	115–125	50–60	80
C	115–125	25–60	85
V	115–125 140–155 190–220 220–250	50–60	85

NOTE: Rating "V" receivers may be used on 40-cycle circuits provided the voltage does not exceed 110 volts on the 115-125 volt tap or 200 volts on the 190-220 volt tap.

Tuning Frequency Range

Band "B" ..... 540– 1600 K.C.
Band "C" ..... 1550– 5800 K.C.
Band "D" ..... 5400–18000 K.C.

Intermediate Frequency ..... 465 K.C.

Electrical Power Output

Undistorted ..... 2.5 watts
Maximum ..... 5.0 watts

Tone Control ..... 4-point control

Loud-speaker—Electrodynamic

Cone: Model F-80 ..... 8 in.
Model F-85 ..... 12 in.

Speaker Impedance ..... 5.5 ohms at 400 cycles

Tubes

Oscillator and Converter ..... 6A8 Pentagrid Converter
1st I.F. Amplifier ..... 6K7 Triple-grid Super-control Amplifier
2nd I.F. Amplifier ..... 6K7 Triple-grid Super-control Amplifier
Detector and AVC ..... 6H6 Twin Diode
Tuning Indicator ..... 6U5 Electron-ray Tube
First Audio Amplifier ..... 6F5 High-gain Triode
Audio Power Amplifier ..... 42 Power Amplifier Pentode
Rectifier ..... 80 Full-wave Rectifier
Dial Lamp ..... MAZDA No. 46

GENERAL INFORMATION

The Models F-80 and F-85 employ eight General Electric tubes described above in a superheterodyne circuit, which includes two stages of I.F. and wave trap, compensated volume control, four-point tone control, and ample pentode power output.

The "B," "C," and "D" band antenna coils are wound on a single coil form designated as T-3 in Fig. 1. Coils L4, L5, and L6 are the components of the "B" band antenna coil. When operating in the "C" band, L4 is used for the grid coil while L3 acts as the antenna primary. L2 is the "D" band antenna grid coil using L3, as in the "C" band, for the antenna primary coil. T4 consisting of plate and grid coils L7 and L8 are the components of the "D" band oscillator coil. L12, L13 and L14, L15 are the "C" and "B" band oscillator coils respectively and are wound on the same coil form. The "B" and "C" band oscillator grid coils are shorted out by a contact of S1 when the set is operating in the "C" and "D" bands respectively.

The intermediate frequency amplifier consists of two 6K7 tubes and three tuned transformers. The output of the third I.F. transformer is applied to one plate of the 6H6 diode, which is a combined detector, initial bias and automatic volume control tube.

Volume is controlled by the variable potentiometer R1 in the grid circuit of the 6F5 audio amplifier tube. The output of the 6F5 is resistance coupled to the grid of the type 42 power amplifier pentode. The plate circuit of the 42 tube is matched to the loud-speaker by means of a suitable step-down output transformer.

Proper bias for the various tubes are obtained by the use of a tapped bleeder resistance (R-11). One of the cathodes of the 6H6 diode is returned to −5 volts on this bleeder in order to provide initial bias to all tubes controlled by the AVC.

Tone Control

When the tone control is in the "normal" position, a portion of the output voltage of the receiver is fed back through a resistor-capacitor network consisting of C-25, R-14 and R-13 to a tap on the volume control. This feedback voltage is out of phase with the input and the resulting degeneration reduces the speaker resonance boom due to pentode output, gives an extended and relatively flat response to a wide range of low frequencies, and reduces distortion arising in the audio amplifier. In the "bass" position, the tone control switch connects C-26 in parallel with the above network. The value of C-26 is such that more degeneration of the high than the low frequency notes occurs, thereby increasing the bass response. The "foreign" position of the switch shorts out capacitor C-25 and resistor R-14 and places C-26 and R-13 in parallel which gives a frequency response best suited for short-wave reception. In the speech position, C-25 and R-14 are shorted out; C-26 is removed from the circuit, leaving R-13, thereby providing flat degeneration at all frequencies which is the most desirable condition for the reception of programs predominating in speech. The tone control switching described can be traced on the schematic diagram shown in Fig. 1.

Tuning Indicator

The 6U5 tuning indicator tube is the remote cut-off type which enables it to operate on a wide range of signal strengths. The avc voltage is maximum when the set is tuned to resonance. This avc voltage is applied to the grid of the 6U5 tube so that the 6U5 triode plate current decreases as the avc voltage increases. As the triode plate voltage rises the voltage on the ray control electrode, which is connected to the plate, rises and changes the electron stream hitting the target. Resonance is indicated by the 6U5 tube when the dark sector reaches minimum width.

ALIGNMENT PROCEDURE

In order to align these receivers properly, it is necessary to have the following test equipment:

1. A modulated test oscillator.
2. An output indicator such as an a-c voltmeter with a scale reading of 3 to 5 volts. A cathode-ray oscilloscope is preferred for I.F. alignment.
3. A screw-driver-type alignment tool.

The alignment procedure is given in table form on page 5 along with the trimmer location drawing, Fig. 4. A "dummy antenna" should be used in all alignments and is the capacitor or capacitor and resistor used in series with the signal generator. The grid lead should not be removed from the tube to which the input signal is applied when aligning the I.F. as this would remove the grid bias from the tube.

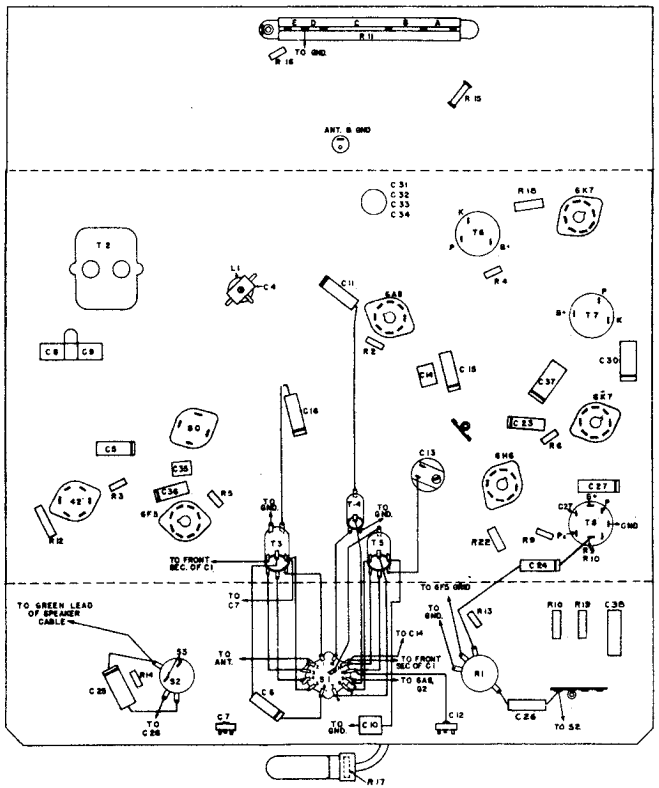

Fig. 2. Chassis Parts Layout

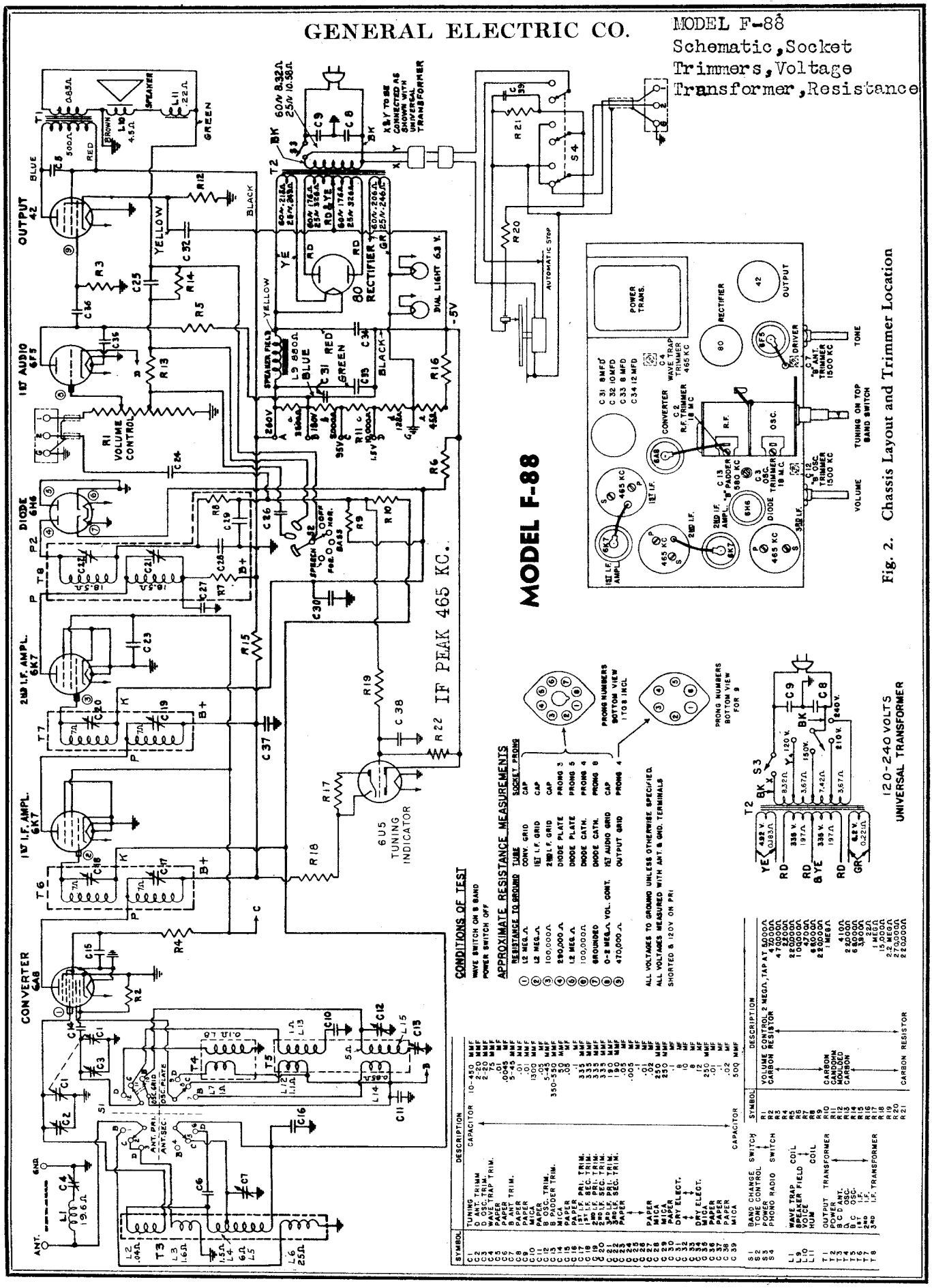

Fig. 2. Chassis Layout and Trimmer Location

©John F. Rider, Publisher

MODEL F-88
Changes, Voltage

GENERAL ELECTRIC CO.

Bypass condenser C-23 has been disconnected from the 2nd I.F. screen grid and connected to the screen of the first I.F.

Second I.F. screen grid has been connected to the converter and first I.F. plate voltage supply lead through a 68,000 ohms dropping resistor, R4A, which has been bypassed by C-23A, a .05 mfd 400 v. condenser.

The 6A8 screen grid resistor R4 has been changed from 2200 ohms to 4700 ohms.

The resistance in series with the crystal pickup has been reduced to 39,000 ohms, the parallel resistance reduced to 100,000 and the parallel capacity increased to .002 mfd.

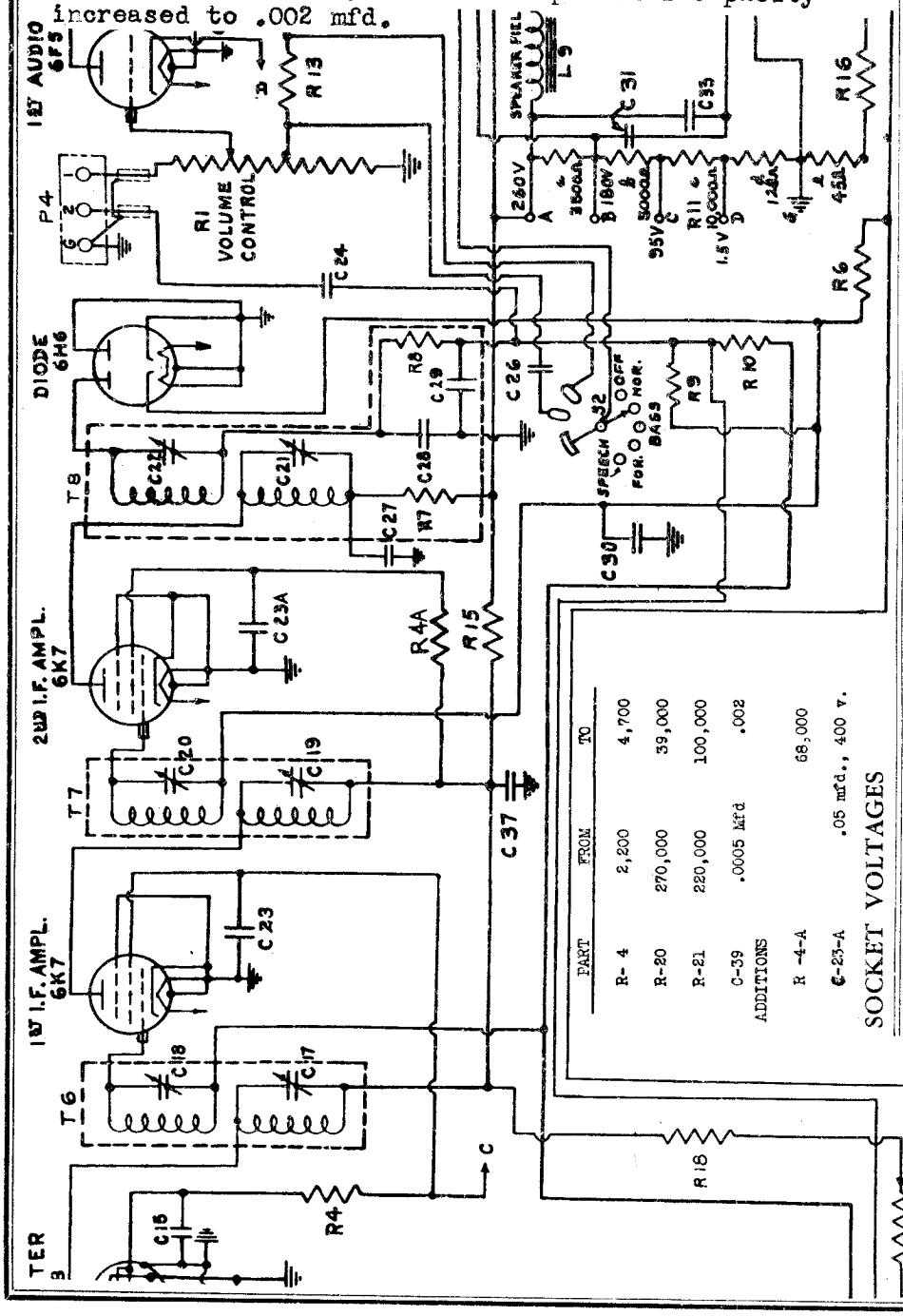

SOCKET VOLTAGES

Tube No.	Plate to Ground Volts D-C	Screen Grid to Ground Volts D-C	Cathode to Ground Volts D-C	Cathode Current M.A.	Heater Volts A.C.
6A8 Oscillator	190	...	...	...	...
Converter	235	100	0	11	6.3
6K7 1st I.F. Amplifier	235	105	0	5	6.3
6K7 2nd I.F. Amplifier	235	105	0	7	6.3
6H6 Detector and A.V.C. Sig. Plate	-5V	...	-5V	0	6.3
6F5 Audio Amplifier	120*	...	1.2	0.2	6.3
42 Output	250	265	16	39	6.3
6U5 Tuning Indicator	250	Target 250	-5V	3.5	6.3
80 Power Rectifier	640/320 RMS	...	335DC	74.0	5.0

A.C. line voltage 120—No signal input—1000 ohms per volt-meter—Dial pointer at 530 K.C. *Measured on 500-volt

PART	FROM	TO
R-4	2,200	4,700
R-20	270,000	39,000
R-21	220,000	100,000
C-39	.0005 Mfd	.002
ADDITIONS		
R-4-A		68,000
C-23-A	.05 mfd., 400 v.	

PRODUCTION CHANGES

Model F-88

©John F. Rider, Publisher

GENERAL ELECTRIC CO.

MODEL F-88
Specifications
Chassis Wiring

Electrical Specifications

Rating Label	Power Supply (Volts)	Frequency (Cycles)	Power Consumption (Watts)
A-6	115–125	60	115
A-5	115–125	50	115
C-2	115–125	25	115
V-6	115–250	60	115
V-5	115–250	50	115

Physical Specifications

Model.....F-88
Height.....42 inches
Width.....27½ inches
Depth.....17¼ inches

Tuning Control Drive Ratio

Fast Tuning..... 8 to 1
Vernier Tuning.....40 to 1

Tuning Frequency Range

Band "B"..... 540–1600 K.C.
Band "C".....1550–5800 K.C.
Band "D".....5400–18000 K.C.

Intermediate Frequency.....465 K.C.

Electrical Power Output

Undistorted.....2.5 watts
Maximum.....5.0 watts

Tone Control.....4-point control

Loud-speaker—Electrodynamic

Cone diameter.....12-inch
Speaker Impedance.....5.5 ohms at 400 cycles

Phonograph Pick-up

Type.....Crystal
Impedance.....80,000 ohms at 1000 cycles

Tubes

Oscillator and Converter..6A8 Pentagrid Converter
1st I.F. Amplifier.....6K7 Triple-grid Super-control Amplifier
2nd I.F. Amplifier.....6K7 Triple-grid Super-control Amplifier
Detector and AVC.....6H6 Twin Diode
First Audio Amplifier....6F5 High-gain Triode
Audio Power Amplifier...42 Power Amplifier Pentode
Rectifier.....80 Full-wave Rectifier
Tuning Indicator.....6U5 Electron-ray Tube
Dial Lamp.....MAZDA No. 46, 6.3 volt, 0.25 amp.

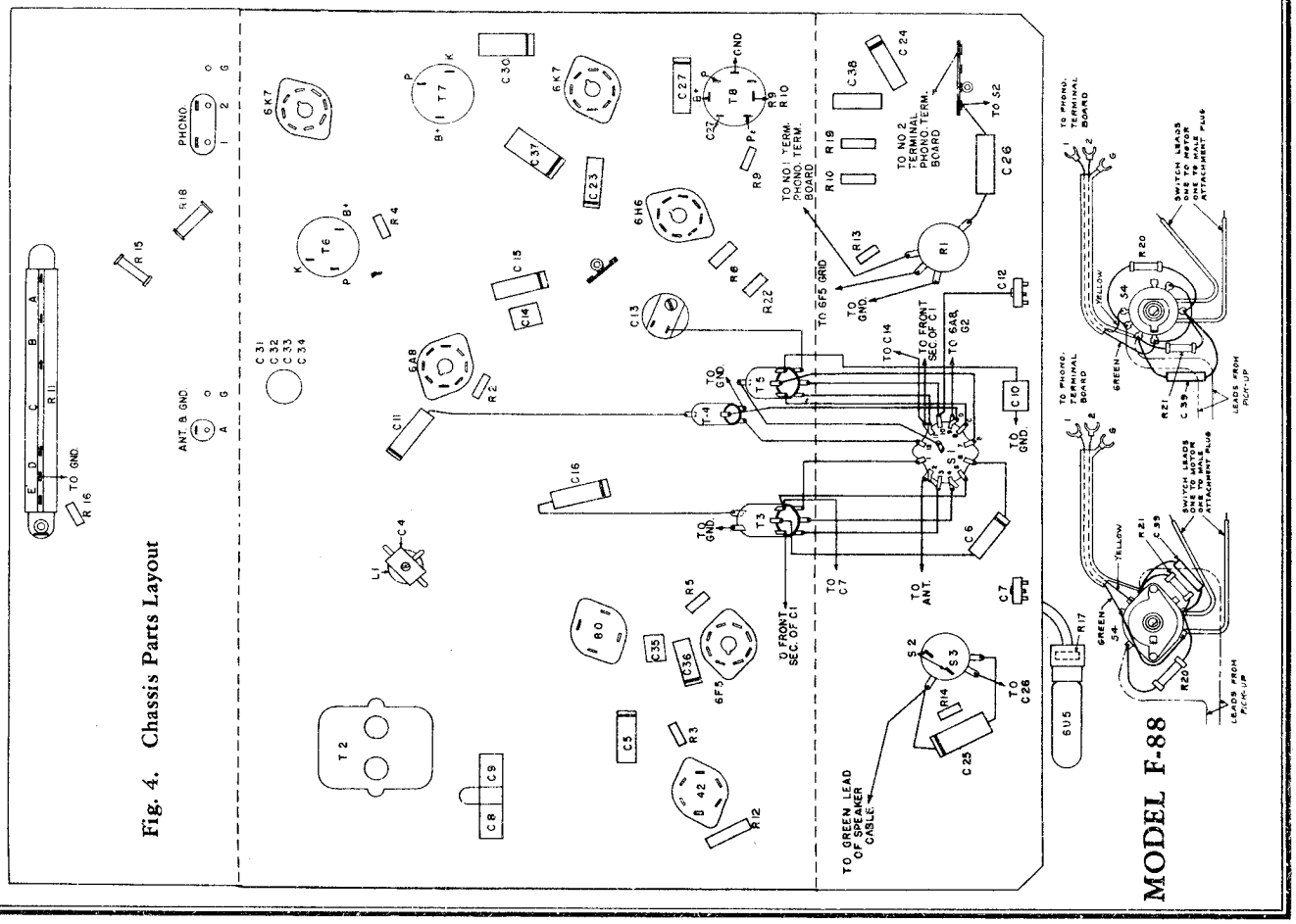

Fig. 4. Chassis Parts Layout

©John F. Rider, Publisher

RFS-88 Radio Receiver, Model F-88

SERVICE DATA

GENERAL INFORMATION

The Model F-88 is a three-band A-C operated radio receiver with the added facilities for the reproduction of phonograph recordings. It employs eight General Electric tubes in a superheterodyne circuit as described above. The receiver circuit incorporates two stages of I.F. amplification, I.F. wave trap, four-point tone control, and other features of design as described in the following paragraphs.

Coil System

The "B", "C" and "D" band antenna coils are wound on a single coil form designated as T-3, in Fig. 1. Coils L4, L5 and L6 are the components of the "B" band antenna coil. When operating in the "C" band, L4 is used for the grid coil while L-3 acts as the antenna primary. L2 is the "D" band antenna grid coil using L3, as in the "C" band, for the antenna primary coil. T4 consisting of plate and grid coils L7 and L8 are the components of the "D" band oscillator coil. L12, L13 and L14, L15 are the "C" and "B" band oscillator coils respectively and are wound on the same coil form.

The oscillator grid coil on the next lower frequency band to the *one in use* is shorted out by a wave switch contact of the switch S1.

The various contact terminals of the wave-change switch are numbered from 1 to 12 to facilitate the tracing of the circuit to the switch when transposing from the schematic to the parts layout diagrams.

Receiver Operation

The intermediate frequency amplifier consists of two 6K7 tubes and three tuned transformers. The output of the third I.F. transformer is applied to one plate of the 6H6 diode which is a combined detector and automatic volume control tube.

Volume is controlled by the variable potentiometer R-1 in the grid circuit of the 6F5 audio amplifier tube. The output of the 6F5 is resistance coupled to the grid of the type 42 power amplifier pentode.

Proper bias for the various tubes is obtained by the use of a tapped bleeder resistance (R-11). The diode load resistance R-9 is returned to approximately −5 volts on R-11 in order to provide an initial bias to all tubes controlled by the AVC.

Tone Control

When the tone control is in the "normal" position, a portion of the output voltage of the receiver is fed back through a resistor-capacitor network consisting of C-25, R-14, and R-13 to a tap on the volume control. This feedback voltage is out of phase with the input and the resulting degeneration reduces the speaker resonance boom due to pentode output, gives an extended and relatively flat response to a wide range of low frequencies, and reduces distortion arising in the audio amplifier. In the "bass" position, the tone control switch connects C-26 in parallel with the above network. The value of C-26 is such that more degeneration of the high than the low frequency notes occurs, thereby increasing the bass response. The "foreign" position of the switch shorts out capacitor C-25 and Resistor R-14 and places C-26 and R-13 in parallel which gives a frequency response best suited for short-wave reception. In the speech position, C-25 and R-14 are shorted out: C-26 is removed from the circuit, leaving R-13, thereby providing flat degeneration at all frequencies which is the most desirable condition for the reception of programs predominating in speech. The tone control switching described can be traced on the schematic diagram shown in Fig. 1.

ALIGNMENT PROCEDURE

In order to align these receivers properly, it is necessary to have the following test equipment:

1. A modulated test oscillator.
2. An output indicator such as an AC voltmeter with a scale reading of 3 to 5 volts. A cathode ray oscilloscope is preferred for I.F. alignment.
3. A screw-driver type alignment tool.

The alignment procedure is given in table form on Page 3 along with the trimmer location drawing, Fig. 2. A "dummy antenna" should be used in all alignments and is the capacitor or capacitor and resistor used in series with the signal generator. The grid lead should not be removed from the tube to which the input signal is applied when aligning the I.F. as this would remove the grid bias from the tube.

Phonograph

The record-reproducing facilities consist of a high impedance crystal pick-up with its associated balanced tone arm connected across the volume control R-1 so that the regular audio system is used. When changing from radio reception to phonograph reception, the phono-radio switch S-4 simultaneously disconnects the 6H6 diode from the volume control, connects the crystal pick-up across this control, and shorts the 6H6 diode output, rendering the radio receiver section inoperative.

The motor switch is turned "on" when the phono-radio switch is placed in the phonograph position. A separate manual motor switch is provided to permit starting and stopping. The automatic stop lever also actuates the manual switch.

PHONOGRAPH MECHANISM

The phonograph mechanism used in this receiver has been designed to be as simple as possible and give long and trouble-free performance. Under normal operating conditions, service difficulties should be negligible. Occasionally, however, certain adjustments may be required. These adjustments are explained in the following paragraphs.

Motor Adjustments

The speed of the turntable is controlled by a governor which allows correct adjustment of the turntable rotation to 78 revolutions per minute. The speed may be checked by placing a piece of paper under and counting the number of revolutions in a minute while the record is being played. If adjustment is necessary lift up the turntable and the speed regulator set screw will be found adjacent to the turntable hub of the motor. Clockwise rotation of this set screw reduces speed.

The motor bearings and gears are properly lubricated for long operation under normal weather conditions. If the motor chatters or runs uneven, place a few drops of light machine oil on the governor felt.

Trip Mechanism

The trip mechanism is of simple design and consists of a latch bar connected to the motor switch and a trip lever. The latch is held closed by means of a spring between the latch bar and the trip lever. The motor switch is mechanically connected to the latch bar so that when the trip mechanism is released the motor switch is in the "off" position. Be sure this latch bar mechanism works freely without binding.

The trip is actuated by an adjustable arm on the trip lever. When the eccentric groove in the record swings the tone arm back and forth, it pushes the latch out of engagement.

Crystal Pick-up

The astatic crystal pick-up employs a crystal element which is coupled to a light needle chuck. The needle movement bends the crystal element thus generating voltage by the piezo-electric effect. The voltage developed is dependent upon the needle movement amplitude and the load resistance.

The crystal cartridge is a factory-sealed unit and no adjustments are provided. In case of replacement the cartridge is held in the tone arm by means of two screws. The pick-up and tone arm assembly should require very little servicing and if treated with reasonable care should perform its function without attention for long periods of time.

©John F. Rider, Publisher

©John F. Rider, Publisher

REPLACEMENT PARTS LIST — MODEL F-88

Stock No.	Description	List Price
RQ-1287	RESISTOR—15,000 ohms, ½ W. carbon (R-18) (Pkg. of 5)	$0.70
RQ-1291	RESISTOR—22,000 ohms, ½ W. carbon (R-13) (Pkg. of 5)	.70
RQ-1299	RESISTOR—47,000 ohms, ½ W. carbon (R-2) (Pkg. of 5)	.70
RQ-1303	RESISTOR—68,000 ohms, ½ W. carbon (R-8, R-14) (Pkg. of 5)	.70
RQ-1307	RESISTOR—1 meg., ½ W. carbon (R-6) (Pkg. of 5)	.70
RQ-1315	RESISTOR—220,000 ohms, ½ W. carbon (R-5, R-9, R-21) (Pkg. of 5)	.70
RQ-1317	RESISTOR—270,000 ohms, ½ W. carbon (R-20) (Pkg. of 5)	.70
RQ-1323	RESISTOR—470,000 ohms, ½ W. carbon (R-3) (Pkg. of 5)	.70
RQ-1331	RESISTOR—1.0 megohm, ½ W. carbon (R-10, R-17) (Pkg. of 5)	.70
RQ-1339	RESISTOR—2.2 megohm, ½ W. carbon (R-19) (Pkg. of 5)	.70
RQ-1349	RESISTOR—5.6 megohm, ½ W. carbon (R²22) (Pkg. of 5)	.70
RR-726	RESISTOR—Candohm tapped resistor (R-11)	.65
RR-727	RESISTOR—410 ohm, 1½ W. molded resistor (R-12)	.15
RS-172	SHIELD—Shield for 1st, 2nd, or 3rd IF transformer	.25
RS-174	SHIELD—6P5 grid shield cap (Pkg. of 5)	.25
*RS-200	SOCKET—8-pin octal base socket (Pkg. of 5)	.75
RS-215	SOCKET—6-prong tube socket (Pkg. of 5)	.60
RS-217	SOCKET—4-prong tube socket (Pkg. of 5)	.50
RS-348	SWITCH—Tone control and power switch (S-2, S-3)	.85
RS-349	SWITCH—Band change switch (S-1)	1.30
RT-078	TRANSFORMER—Power transformer, 115–125 V., 60 cycles (T-2)	4.30
RT-079	TRANSFORMER—Power transformer, 115–125 V., 25 cycles (T-2)	7.60
RT-0710	TRANSFORMER—Universal power transformer (T-2)	7.40
*RT-232	TRANSFORMER—3rd I.F. transformer (Complete) (L-8, C-21, C-22, C-28)	1.75
RT-233	TRANSFORMER—1st or 2nd I.F. transformer (complete) (L-6, C-17, C-18; L-7, C-19, C-20)	1.50
RV-029	VOLUME CONTROL—2 megohm volume control (R-1)	.75
RW-015	WINDOW—Escutcheon window with rubber mountings	.45
*RW-101	WASHER—Felt washers for knobs (Pkg. of 10)	.45
*RW-400	WAVE TRAP—Wave trap complete (L-1 C-4)	.80
*RX-016	ASSEMBLY—Gang condenser mounting assembly	.30
RX-021	ASSEMBLY—Chassis mtg. assembly	.10
	SPEAKER ASSEMBLY	
RC-925	CONE—12-in. cone and voice coil assembly	$1.25
*RC-991	CLAMP—Voice coil spider clamp	.05
*RP-015	PLUG—Male speaker plug	.20
RS-057	SPEAKER—12-in. speaker complete	6.80
*RS-416	SPRING—Voice coil leads spring (Pkg. of 2)	.10
RT-421	TRANSFORMER—Output transformer	1.30
	DIAL SCALE MECHANISM	
RB-155	BRACKET—Band change bracket	.05
RB-604	BUSHING—Volume control cable drive bushing	.10
RC-840	CABLE—Gang condenser drive cable (Pkg. of 5)	.55
RC-844	CABLE—Tone control cable (Pkg. of 5)	.45
RC-845	CABLE—Volume control cable (Pkg. of 5)	.45
*RD-030	DRUM—Condenser drive drum	.40
RD-052	DIAL—Dial scale	1.40
RP-073	POINTER—Volume or tone control pointer (Pkg. of 5)	.10
RP-075	PULLEY—Small drive cord idler pulley (Pkg. of 6)	.20
RP-076	PULLEY—Tone control drive pulley	.15
RP-077	POINTER—Dial scale pointer (Pkg. of 5)	90
RR-910	REFLECTOR—Lamp reflector	.10
RS-218	SOCKET—Lamp socket assembly	.10
RS-425	SPRING—Tuning drive cord tension spring (Pkg. of 5)	.10
RS-426	SPRING—Tone or volume control drive cord spring (Pkg. of 5)	.10
RX-022	ASSEMBLY—Band indicator assembly (includes cord, pointer, and spring)	.20
	PHONOGRAPH ASSEMBLY	
RA-405	ARM—Pick-up tone arm	2.30
RC-5000	CRYSTAL—Crystal cartridge assembly	6.00
RC-8021	CABLE—Radio-phono shielded cable	.35
RK-018	KNOB—Radio-phono switch knob (Pkg. of 5)	.40
RM-106	MOTOR—Motor complete, 78 R.P.M., 115–125 V., 60 cycles	13.75
RM-107	MOTOR—Motor complete, 78 R.P.M., 115–125 V., 50 cycles	13.75
RM-108	MOTOR—Motor complete, 78 R.P.M., 115–125 V., 25 cycles	15.25
*RP-024	PLUG—Two contact round female plug	.60
*RP-025	PLUG—Two contact round male connector plug	.20
RS-366	SWITCH—Radio-phono switch	1.10
RS-374	SWITCH—Automatic stop and switch (complete)	1.50
RS-859	SCREW—Needle clamp screw	.10
RT-903	TURNTABLE—10-inch turntable (brown velveteen)	1.75
RX-037	ASSEMBLY—Motor mounting assembly	.20
*RB-008	BOARD—Terminal board (2 terminals)	$0.10
*RB-026	BOARD—Ant. & Gnd. terminal board	.10
RB-158	BRACKET—Tuning Indicator Bracket	.10
*RC-017	CAPACITOR—.0045 Mfd., 200 V. paper (C-6)	.25
*RC-023	CAPACITOR—.005 Mfd., 600 V. paper (C-24)	.25
*RC-034	CAPACITOR—.01 Mfd., 200 V. paper (C-26) (close tolerance)	.25
*RC-042	CAPACITOR—.01 Mfd., 1000 V. paper (C-5, C-36)	.30
*RC-080	CAPACITOR—.02 Mfd., 400 V. paper (C-27, C-38)	.25
*RC-091	CAPACITOR—.05 Mfd., 400 V. paper (C-11, C-15, C-23)	.30
RC-103	CAPACITOR—0.1 Mfd., 200 V. paper (close tolerance) (C-25)	.30
*RC-123	CAPACITOR—.1 Mfd., 400 V. paper (C-16, C-30, C-37)	.35
*RC-213	CAPACITOR—50 Mmf. Mica (C-14)	.25
*RC-259	CAPACITOR—250 Mmf. Mica (C-29, C-35)	.30
*RC-296	CAPACITOR—500 Mmf. Mica (C-39)	.25
RC-339	CAPACITOR—1300 Mmf. Mica (C-10)	.35
RC-575	CAPACITOR—Dry electrolytic; 8 Mfd. 350 V; 10 Mfd., 25 V; 8 Mfd., 400 V; 12 Mfd., 450 V; (C-31, C-32, C-33, C-34)	2.10
*RC-618	CAPACITOR—"B" band osc. trimmer 5–45 Mmf. (C-7, C-12)	.25
RC-634	CAPACITOR—"B" band osc. padder 350–550 Mmf. (C-13)	.35
RC-635	CAPACITOR—Double trimmer, 1st or 2nd IF transformer (C-18, C-17, C-19, C-20)	.45
*RC-637	CAPACITOR—Double trimmer, 3rd IF transformer (C-21, C-22, C-28)	.60
*RC-710	CONDENSER—2-gang tuning condenser (C-1, C-2, C-3)	$3.60
*RC-754	CAPACITOR—Line filter capacitor, .01–.01 Mfd., 250 V. A.C. (C-8, C-9)	.40
RC-843	CABLE—Speaker cable and plug	.35
RC-865	CORD—Power cord and plug	.45
RC-8018	CABLE—Tuning Indicator Cable and Socket	.65
RD-203	DRIVE—Tuning Condenser friction drive reduction	1.10
RE-014	ESCUTCHEON—Escutcheon plate (assembly)	1.75
RE-021	ESCUTCHEON—Tuning Indicator escutcheon	.35
*RF-010	FOOT—Mounting foot assembly (Pkg. of 2)	.30

ALIGNMENT PROCEDURE

I. F. ALIGNMENT WITH OSCILLOSCOPE

Band Switch Setting	Input Freq.	Point of Input	Dummy Antenna	Trimmer	Comments
1. Band "B"	465 K.C. Sweep	2nd I.F. Grid	.05 Mfd.	3rd I.F. Sec. (C-22) 3rd I.F. Pri. (C-21)	Gang condenser plates wide open—connect vertical input of oscilloscope to ground and the junction of C-24 and R-9 on 3rd I.F. transformer. Adjust trimmers for a single symmetrical curve of maximum amplitude. The resulting curve with input at converter grid is shown in Figure 3.
2. Band "B"	465 K.C. Sweep	1st I.F. Grid	.05 Mfd.	2nd I.F. Sec. (C-20) 2nd I.F. Pri. (C-19)	
3. Band "B"	465 K.C. Sweep	Converter Grid	.05 Mfd.	1st I.F. Sec. (C-18) 1st I.F. Pri. (C-17)	
4. Band "B'	465 K.C. Sweep	Antenna Post	250 Mmf. 400 ohms	Wave Trap Trimmer (C-4)	Adjust for minimum amplitude.

I. F. ALIGNMENT WITH OUTPUT METER

1. Band "B"	465 K.C. with Modulation	2nd I.F. Grid	.05 Mfd.	3rd I.F. Sec. (C-22) 3rd I.F. Pri. (C-21)	Gang condenser plates wide open—connect output meter across voice coil—keep input signal low and volume control at maximum. Adjust all trimmers in order mentioned for maximum output. Do not attempt an overall realignment after stage by stage alignment has been accomplished.
2. Band "B"	465 K.C. with Modulation	1st I.F. Grid	.05 Mfd.	2nd I.F. Sec. (C-20) 2nd I.F. Pri. (C-19)	
3. Band "B"	465 K.C. with Modulation	Converter	.05 Mfd.	1st I.F. Sec. (C-18) 1st I.F. Pri. (C-17)	
4. Band "B"	465 K.C. with Modulation	Antenna Post	250 Mmf. 400 ohms	Wave Trap Trimmer (C-4)	Adjust for minimum output.

R. F. ALIGNMENT

1. Band "B"					Close gang plates—adjust pointer to first line at left end of tuning scale.
2. Band "D"	18 M.C. with Modulation	Antenna Post	250 Mmf. 400 ohms	Osc. (C-3) Ant. (C-2)	Connect output meter across voice coil—tone control on "Bass" position. The image of any "D" band signal should be heard 930 K.C. above input signal when (C-3) is on proper peak. Example: 15 M.C. image—15,930 K.C. Peak (C-2) while rocking the gang condenser.
3. Band "C"	No adjustments necessary.				
4. Band "B"	1500 K.C. with Modulation	Antenna Post	250 Mmf. 400 ohms	Osc. (C-12) Ant. (C-7)	Peak trimmers for maximum output with a low input signal.
5. Band "B"	580 K.C. with Modulation	Antenna Post	250 Mmf. 400 ohms	Osc. Padder (C-13)	Adjust padder for maximum output in vicinity of 580 K.C. while rocking the gang condenser.
6. Band "B"	1500 K.C. with Modulation	Antenna Post	250 Mmf. 400 ohms	Osc. (C-12) Ant. (C-7)	Peak trimmers for maximum output with a low input signal.

Stock No.	Description	List Price
*RG-001	GRID CLIP—Control grid clip (Pkg. of 5)	.10
RG-300	GROMMET—Tuning shaft grommet (Pkg. of 5)	.20
RK-017	KNOB—Control knob (Pkg. of 5)	.40
RK-018	KNOB—Wave change switch knob (Pkg. of 5)	.40
RL-043	COIL—"B", "C", and "D" band ant. coil (T-3)	1.50
RL-245	COIL—"D" band oscillator coil (T-4)	.65
RL-246	COIL—"B" and "C" band oscillator coil (T-5)	1.05
RL-920	LAMP—Dial lamp, 6.3 V., 0.25 amp. (Pkg. of 10)	1.50
RQ-1219	RESISTOR—22 ohms, ½ W. carbon (R-16) (Pkg. of 5)	.70
RQ-1267	RESISTOR—2,200 ohms, ½ W. carbon (R-4) (Pkg. of 5)	.70
RQ-1273	RESISTOR—3900 ohms, ½ W. carbon (R-15) (Pkg. of 5)	.70
RQ-1275	RESISTOR—4700 ohms, ½ W. carbon (R-7) (Pkg. of 5)	.70

*Used on previous receivers. (Prices subject to change without notice)

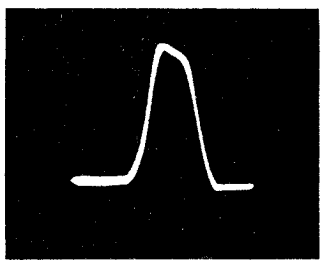

Fig. 1. Over-all I.F. Curve

©John F. Rider, Publisher

SERVICE DATA

Physical Specifications

Model F-96
Height ..... 41 in.
Width ..... 26½ in.
Depth ..... 14¼ in.
Weight packed ..... 81 lb

Tuning Control Drive Ratio

Fast tuning ..... 10 to 1
Vernier tuning ..... 55 to 1

Electrical Specifications

Rating Label	Power Supply (Volts)	Frequency (Cycles)	Power Consumption (Watts)
A	110–120 and (120–130)*	50–60	105
C	110–120 and (120–130)*	25–60	105

*The receiver as shipped from the factory, has the power cord connected to the 120–130 volt tap of the transformer, (red and black lead). If the normal voltage of your power supply is always below 115 volts, the power cord should be removed from this tap and connected to the lower voltage tap, (yellow and black lead). Solder and tape the joint and also tape the exposed end of the unused lead.

Tuning Frequency Range

Band "B" ..... 540–1640 kc.
Band "C" ..... 1600–5650 kc.
Band "D" ..... 5640–18,000 kc.

Intermediate Frequency ..... 465 kc.

Electrical Power Output

Undistorted ..... 2.5 watts
Maximum ..... 5.0 watts

Tone Control 4-point

Loud-speaker—Electrodynamic

Cone 12-inch
Voice Coil Impedance ..... 5.5 ohms at 400 cycles

Tubes

R.F. Amplifier ..... 6K7 Triple-grid, super-control Amplifier
Oscillator and Converter ..... 6A8-G Pentagrid Converter
A.F.C. Control ..... 6J5-G Detector Amplifier Triode
1st I.F. Amplifier ..... 6K7 Triple-grid, Super-control Amplifier
2nd I.F. Amplifier ..... 6K7 Triple-grid, Super-control Amplifier
Detector AFC and AVC ..... 6H6 Twin Diode
First Audio Amplifier ..... 6F5 High Gain Triode
Audio Power Amplifier ..... 42 Power Amplifier Pentode
Rectifier ..... 80 Full-wave Rectifier
Dial Lamp ..... Mazda No. 46—6.3 volts, 0.25 amps.

GENERAL INFORMATION

Model F-96 is a three band a-c operated receiver employing nine General Electric Pre-tested Tubes as described above in a superheterodyne circuit. The receiver circuit consists of an R.F. amplifier, an oscillator-converter with automatic frequency control, a two stage I.F. amplifier, a detector, avc and discriminator circuit and the audio amplifier. Added features are a four point tone control, wave trap, and the "Touch Tuning" system with its sever buttons allowing the instant selection of seven stations.

Receiver Operation

The R.F. amplifier consists of the antenna transformer (T-6) connected to the 6K7 which is coupled to the 6A8-G through the R.F. transformer (T-4). The signal is converted to an intermediate frequency of 465 kc by the oscillator and converter tube 6A8-G. The intermediate frequency is then amplified by the two 6K7 tubes used in conjunction with the three double tuned I.F. transformers. The primary and secondary coils of these I.F. transformers are carefully adjusted midway between the points of critical and over coupling so as to give the I.F. amplifier a broadened band width with the resultant improvement in fidelity of the received program.

The output of the I.F. amplifier is applied to a 6H6 twin diode, which is a combination detector, automatic volume control and discriminator voltage source for the automatic frequency control tube 6J5-G.

A detailed explanation of A.F.C. will be found in a following paragraph.

The volume is controlled by a potentiometer in the grid circuit of the 6F5 audio amplifier tube. This tube is resistance coupled to the 42 pentode output tube. The output transformer is designed to correctly load the 42 tube over a broad range of frequencies thus enabling the tube to deliver ample undistorted output to the 12-inch speaker.

Tone Control

Negative feed back is used to control the quality and tone of reproduction. The frequency response of the audio circuit is varied by the tone control switch and its associated network as follows:

In the "Normal" position, voltage from the voice coil is fed back through R-23, R-2 and C-49 to a tap on the volume control. C-31 serves to inject high frequencies into a tap higher up on the volume control. This arrangement gives an extended high frequency response, holds down the "boom" caused by pentode output and speaker resonance, and at the same time improves the quality and response to an extended range of both high and low frequencies.

In the "Bass" position, the high frequency input to the audio system is limited by the addition of C-41 across the volume control and its coupling condenser; and, also, by the omission of the high frequency injector capacitor C-31. This permits the true reproduction of a wide range of low frequencies without the "boom" at speaker resonance.

In the "Foreign" position R-2 and C-49 are shorted out of the network used for "Bass." C-41 is used, as in the "Bass" position, to limit the high frequency input to the audio amplifier. This permits more degeneration of the lower frequencies, and provides a tone range most suited for foreign reception. This position may be used to reduce noise and also to reduce bass on programs which predominate in low frequency tones.

C-41 is removed from the circuit in the "Speech" position; R-2 and C-49 are shorted out leaving R-23 and C-31 in the circuit, thus allowing flat degeneration of all frequencies. This arrangement has been found to give the best response for programs predominating in speech.

Coil System

The coils for the three bands are wound on a single form. The antenna transformer is designated as T-6, the R.F. transformer as T-4 and the oscillator transformer as T-5. All contacts on the band switch are numbered in Fig. 5 and Fig. 6 to facilitate tracing the coil circuits.

The band switch connects the coils to operate as follows:

	Primary	Secondary	Remarks
Ant.			
"B"	L-6	L-4 & L-5	
"C"	L-3	L-4	L-5 shorted
"D"	L-2 & L-3	L-1	L-4 & L-5 shorted
R.F.			
"B"	L-13	L-11 & L-12	
"C"	L-10	L-11	L-12 shorted
"D"	L-9 & L-10	L-8	L-11 & L-12 shorted
Osc.			
"B"	L-19	L-18	
"C"	L-17	L-16	Connects C-30 across L-18
"D"	L-15	L-14	Connects C-30 across L-16

On "D" band contact No. 9 is used to provide a ground for the General Electric noise-reducing antenna systems KV-300 and FT-40.

Automatic Frequency Control

The Automatic Frequency Control used in this receiver shifts the oscillator frequency so that the correct intermediate frequency is very closely produced even when the receiver is mistuned several kilocycles.

The essential elements are the discriminator transformer T-9, the twin diode 6H6 with its balanced discriminator network, and the 6J5-G control tube connected across the broadcast oscillator plate coil.

The discriminator transformer is designed to deliver (when properly tuned to 465 kc.) equal voltages to each section of the 6H6. Under this condition the voltage drop across R-21 is equal and opposite to the voltage across the total resistance of R-19, R-22, and R-17; thus no discriminator voltage is produced to control the 6J5-G tube.

However, if the signal frequency is increased above 465 kc. unequal voltages are applied to the diodes and the voltage over R-21 is greater than the voltage over the combined resistance of R-19, R-22, and R-17. The difference of these two voltages is positive and is applied to the 6J5-G control tube.

When the signal frequency is decreased below 465 kc. the result is less voltage over R-21 and a greater voltage over the combined resistances R-19, R-22 and R-17. The difference of these two voltages, as applied to the 6J5-G control tube, is negative.

Thus three conditions arise:

On resonance:	no discriminator voltage developed
Above 465 kc.:	a positive control voltage
Below 465 kc.:	a negative control voltage

The 6J5-G A.F.C. control tube has a combination of self and fixed bias, the latter being the result of the current supplied through R-8 to the cathode resistor R-4. The R.F. voltage applied to the control grid of the 6J5-G is obtained from the drop across the C-6 series padder and C-30. The vector sum of these two voltages is applied to the phase-shifting network C-25 and R-3 and in turn to the control grid. This phase-shifting network causes the control tube to appear as a reactance in parallel with the oscillator coil. The value of the apparent reactance depends upon the control voltage produced by the discriminator.

When the set is mistuned above the incoming signal the converter output is above the 465 kc. required. A positive discriminator voltage is produced as explained above. This causes the 6J5-G tube to act as more capacitive reactance and thus lower the oscillator frequency; this gives a lower converter output frequency, approximately 465 kc.

When the set is mistuned below the incoming signal, the converter output is below the 465 kc. required. A negative discriminator voltage is produced as explained above. This causes the 6J5-G to act as less capacitive reactance thus increasing the oscillator frequency. This in turn gives a higher converter output frequency, approximately 465 kc.

A decided A.F.C. action is apparent on short waves. The discriminator voltage is produced in the same manner as above. However, the action of the 6J5-G tube is different. The 6A8-G oscillator plate voltage and 6J5-G plate voltage are supplied through the same resistor (R-5). A positive discriminator voltage allows the 6J5-G plate current to increase, thus reducing the 6A8-G oscillator plate voltage. This causes a lower oscillator frequency with the resultant lower converter output frequency, approximately 465 kc.

With a negative discriminator voltage the 6J5-G plate current is less, thus increasing the 6A8-G oscillator plate voltage. This causes a higher oscillator frequency with the resultant higher converter output frequency, approximately 465 kc.

Touch Tuning

This receiver employs six pairs of selector trimmers to tune the antenna and oscillator circuits to six different stations in the broadcast band. By leaving the gang condenser tuned to a station, not tuned by the above trimmers, any one of seven stations is available by merely touching a button.

The manual button operates the switches S-6, S-7, S-8, and S-9 simultaneously. The switches are shown in the manual position in Fig. 5. S-9 is used to provide the ground connection for the 1500 kc. antenna trimmer C-2, and it also grounds the antenna selector trimmers.

Pressing any one of the buttons releases any other button which may have been depressed. When the manual button is in the released position, S-6 opens the antenna transformer connection to the grid of the 6K7 R.F. amplifier, and replaces the antenna section of the gang condenser with the antenna selector trimmers.

S-7 opens the circuit to the R.F. stage and connects the 6A8-G grid to the antenna transformer. It should be noted that both the input and output circuits of the R.F. stage are disconnected.

S-9 removes the ground from C-2 and from the antenna selector trimmers. It shorts out R-32 thus decreasing the self bias on the 6K7, 1st I.F. amplifier, and consequently increasing the sensitivity.

S-8 connects the oscillator selector trimmers in the place of the oscillator section of the gang condenser C-20.

A depressed station button simultaneously connects the antenna and oscillator selector trimmers. As an example, the extreme left-hand button connects C-65 and C-71 to the antenna and oscillator transformers respectively.

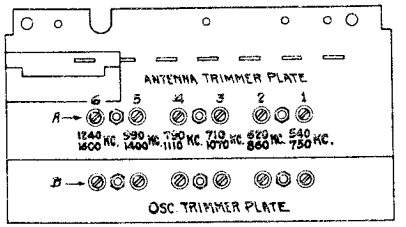

Fig. 1. Selector Trimmer Location

The frequency range covered by each trimmer is shown in Fig. 1. To set up a pair of trimmers for a station within their range, press the corresponding button until it locks in position. First tune the oscillator trimmer to the station and then tune the antenna trimmer for maximum output. Weak stations may require an approximate setting of the antenna trimmer before it will be possible to tune in the station with the oscillator trimmer. Be sure the A.F.C. switch is turned off while making these adjustments. The trimmers in the top row tune the antenna transformer while those in the lower row are used to tune the oscillator.

When operating with the manual button depressed, the gang condenser is used to tune the secondary circuits as described under coil system. The manual button must be depressed when operating on "C" and "D" bands.

SERVICE HINTS

If depressing a button does not release another button which was depressed, check the latch-bar spring. If there is only one spring, and that spring is in the center of the latch bar, decreasing the tension will remedy the trouble. Another solution is to replace the center spring with two springs, one at each end of the latch bar. They should have approximately the same tension. Make sure that the ears on the latch bar are twisted sufficiently to reduce, to a minimum, play in the direction of key movement.

C-2 was connected directly to ground in some of the early production receivers; connecting C-2 as shown in Fig. 5 will extend the high-frequency range of the antenna selector trimmers, because C-2 is then connected across only a small part of the antenna secondary when operating the touch tuning.

Where local conditions require a special range trimmer, this can be obtained by selecting a trimmer of lower capacity and shunting it with a good grade low power factor mica capacitor. Replacement parts RC-207, RC-211, RC-228 and RC-236 have capacities of 25, 50, 85 and 100 Mmf. respectively and should fill the requirements.

Where trimmers do not cover the high-frequency range assigned to them, inspect the trimmer for a bent lug. The lug may be bent in such a manner that the trimmer plates do not separate sufficiently to reach minimum capacity.

It will be found that stability is better if care is exercised to operate the trimmers near maximum capacity where possible, rather than using the trimmer of the next higher range and thus operating that trimmer at minimum capacity.

GENERAL ELECTRIC CO.

MODEL F-96
Schematic
Resistance

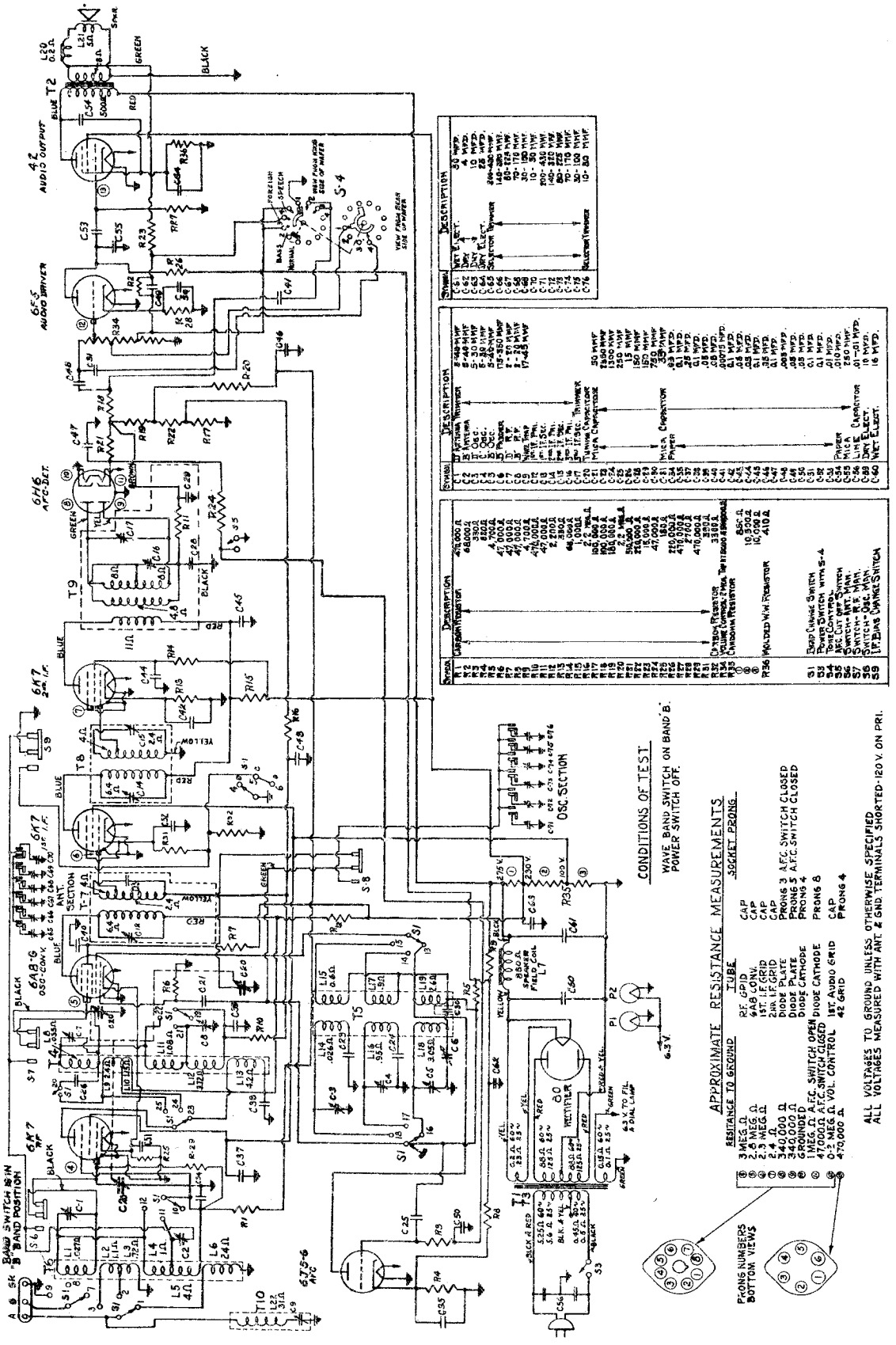

©John F. Rider, Publisher

MODEL F-96
Chassis Wiring

GENERAL ELECTRIC CO.

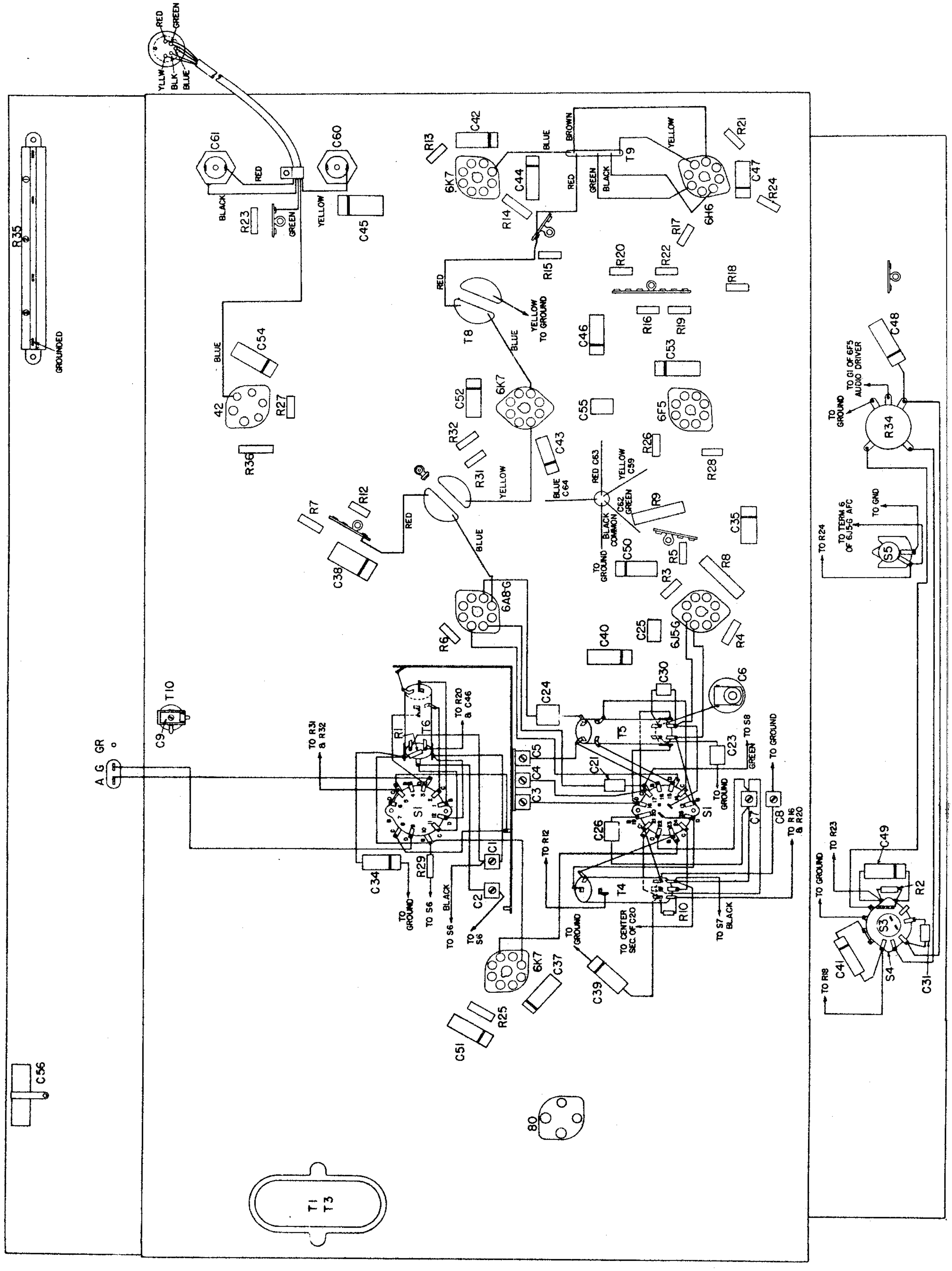

©John F. Rider, Publisher

©John F. Rider, Publisher

ALIGNMENT PROCEDURE

I.F. Alignment with Oscilloscope

Band Switch Setting	Input Frequency	Point of Input	Dummy Ant.	Trimmer (See Fig. 2)	Remarks
1. Band "B"	465 kc. Sweep	2nd I.F. Grid	.05 Mfd.	3rd I.F. Pri. (C-16)	A.F.C. switch "off"—Condenser gang at minimum capacity—vertical input ground and the junction of R-18, R-19, R-21 and brown lead from the 3rd I.F. trans. Adjust trimmers in order listed for a single curve of maximum amplitude. The resulting curve with input at converter grid is shown in Fig. 3.
2. Band "B"	465 kc. Sweep	1st I.F. Grid	.05 Mfd.	2nd I.F. Sec. (C-15) Pri. (C-14)	
3. Band "B"	465 kc. Sweep	Converter Grid	.05 Mfd.	1st I.F. Sec. (C-13) Pri. (C-12)	
4. Band "B"	465 kc. Sweep	Converter Grid	.05 Mfd.	3rd I.F. Sec. (C-17)	Disconnect one end of C-47—Turn A.F.C. switch "on"—Vertical input of oscilloscope to ground and discriminator cathode; prong No. 8 on 6H6. Adjust trimmer for cross on horizontal axis Fig. 4.
5. Band "B"	465 kc. Sweep	Antenna Post	250 Mmf. 400 Ohms	Wave Trap Trimmer (C-9)	Adjust for minimum amplitude.

I.F. Alignment with Output Meter

1. Band "B"	465 kc. Modulated	2nd I.F. Grid	.05 Mfd.	3rd I.F. Pri. (C-16)	A.F.C. switch "off"—Condenser gang at minimum capacity—output meter connected across the voice coil—volume control at maximum—input as low as practical. Adjust all trimmers in order listed for maximum output. Do not attempt an over-all re-alignment once a stage alignment has been completed.
2. Band "B"	465 kc. Modulated	1st I.F. Grid	.05 Mfd.	2nd I.F. Sec. (C-15) Pri. (C-14)	
3. Band "B"	465 kc. Modulated	Converter Grid	.05 Mfd.	1st I.F. Sec. (C-13) Pri. (C-12)	
4. Band "B"	.....	.....	.....	3rd I.F. Sec. (C-17)	See paragraph on A.F.C. adjustment.
5. Band "B"	465 kc. Modulated	Antenna Post	250 Mmf. 400 Ohms	Wave Trap Trimmer (C-9)	Adjust for minimum amplitude.

R.F. Alignment

1. Band "B"	.....	.....	.....	.....	Turn A.F.C. switch "off"—Set dial pointer to first line at left-hand end of dial scale with condenser gang fully meshed.
2. Band "D"	18 mc. Modulated	Antenna Post	250 Mmf. 400 Ohms	Osc. (C-3) R.F. (C-7) Ant. (C-1)	Connect output meter across voice coil—Turn tone control to bass. D band image should be 930 kc. *below* input signal when oscillator trimmer (C-3) is peaked properly. Example: 15 mc.—image 14.07 mc. Peak C-7 and C-1 while rocking gang condenser.
3. Band "C"	5220 kc. Modulated	Antenna Post	250 Mmf. 400 Ohms	Osc. (C-4)	Adjust trimmer for greatest output with dial pointer at 5220 kc.
4. Band "B"	1500 kc. Modulated	Antenna Post	250 Mmf. 400 Ohms	Osc. (C-5) R.F. (C-8) Ant. (C-2)	Adjust trimmers, in order listed, for greatest output at 1500 kc.
5. Band "B"	580 kc. Modulated	Antenna Post	250 Mmf. 400 Ohms	Osc. Padder (C-6)	Adjust padder for maximum output in vicinity of 580 kc. while rocking gang condenser.
6. Band "B"	Repeat operation No. 4				

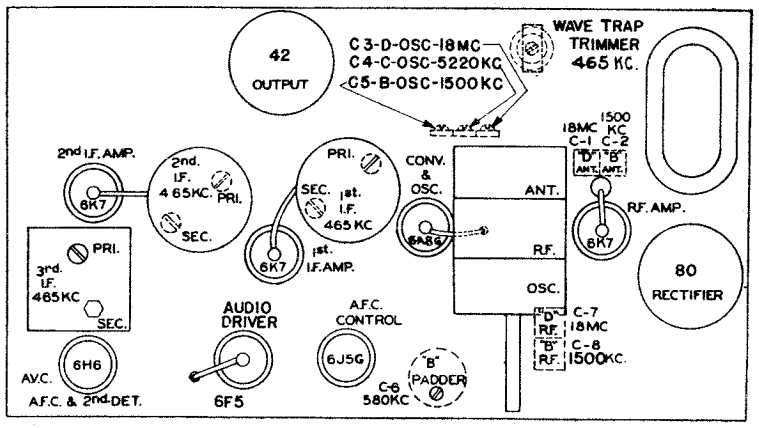

Fig. 2. Chassis Layout and Trimmer Location

ALIGNMENT PROCEDURE

In order to align these receivers properly, it is necessary to have the following test equipment:

1. A modulated test oscillator.
2. An output indicator such as an AC voltmeter with a scale reading of 3 to 5 volts. A cathode ray oscilloscope is preferred for I.F. Alignment.
3. A screwdriver type alignment tool.

The alignment procedure is given in table form along with the trimmer location drawing, Fig. 2. A "dummy antenna" should be used in all alignments and is the capacitor, or capacitor and resistor, used in series with the signal generator. The grid lead should not be removed from the tube to which the input signal is applied when aligning the I.F. as this would remove the grid bias from the tube.

4. Alignment of the "touch tuning" trimmers is discussed in the section on "Touch Tuning."

Automatic Frequency Control Adjustments

After I.F. alignment is completed with output meter, without disturbing the generator setting, remove the signal generator lead from the grid of the 6A8-G converter. Apply the 465 kc. signal to the 6A8-G grid capacitively through the insulation of the grid lead.

Tune in a weak broadcast station at about 1000 kc. and, with the A.F.C. switch "off," tune the receiver carefully for "zero" beat between this carrier and the 465 kc. generator signal. Throw the A.F.C. switch on and adjust the 3rd I.F. secondary trimmer (C-17) to zero beat. This adjustment is very critical and must be made with great care. When the alignment is correctly done, there will be no appreciable difference in the beat note with the A.F.C. switch "on" or "off."

Another method of A.F.C. adjustment, after I.F. alignment with an output meter, is to connect a low range voltmeter between the cathodes of the 6H6 A.F.C. tube. Leave the signal generator connected to the 6A8-G grid and, without disturbing the 465 kc. setting of the signal generator, adjust C-17. It will be noticed that the meter reads plus when C-17 is tuned off resonance on one side and negative when tuned on the opposite side of resonance. The correct adjustment of C-17 is between these positions when the voltmeter reads zero.

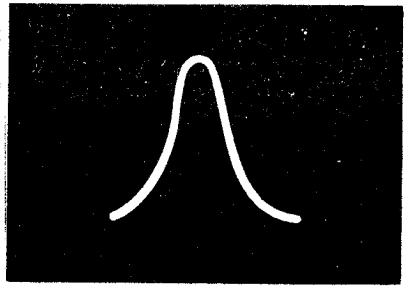

Fig. 3. Over-all I.F. Curve

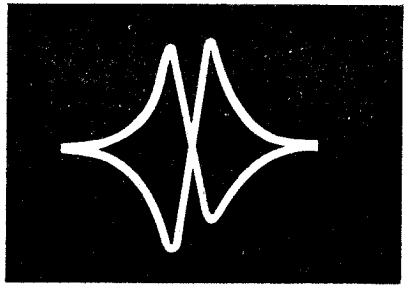

Fig. 4. A.F.C. Alignment Curve

©John F. Rider, Publisher

SOCKET VOLTAGES

Tube No.		Plate to Ground Volts D-c	Screen Grid to Ground Volts D-c	Cathode to Ground Volts D-c	Cathode Current M.A.	Heater Volts A-c
6K7	R.F. Amp.	215	100	3.0	7.6	6.15
6A8-G	Oscillator	180	...	3.0	9.0	6.15
	Converter	215	83			
6J5-G	A.F.C. control	170	...	6.5	4.0	6.15
6K7	1st I.F. Amp.	225	100	3.0 C & D bands 7.5 B band	7.9 2.0	6.15
6K7	2nd I.F. Amp.	225	100	3.0	8.5	6.15
6F5	Audio	120*	...	1.0	0.37	6.15
42	Output	255	230	13.5	33.0	6.15
80	Rectifier	680/340 RMS*	...	354	83.0	5.0

A.C. line voltage 120 on Primary 125-volt tap—No signal input—1000 ohms per-voltmeter.
Dial pointer at 530 kc.
* Measured on 500-volt scale.

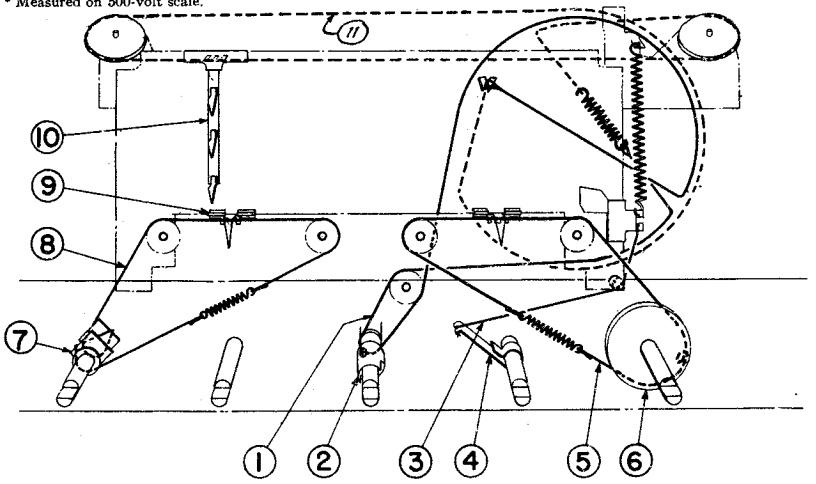

Fig. 7 Dial Mechanism

DIAL MECHANISM

The dial mechanism (Fig. 7) is rigidly mounted to the chassis by means of two brackets and four self-tapping screws. The gang condenser is operated by means of an "automatic vernier" reduction drive unit, mounted on the receiver chassis, and connected to the gang drive drum by a drive cable.

The dial pointer is connected to the gang condenser drum by a cable which passes around two idler pulleys. The pointer is guided on a rail in the rear of the dial scale. The following instruction will aid in making repairs to this mechanism.

To Replace Drive Cable and Pointer Cable

Remove the dial scale. This will allow ready access to all the dial mechanism.

To replace the drive cable (1), set the drive drum to the relative position as shown in Fig. 7, loop the cord over the tab on the drum, then thread it once around the vernier drive of the pointer set the tone control in the extreme counter-clockwise position. Slide the pointer until it extends about 1/16 in. over the left-hand end of the guide rail. After the dial scale has been replaced, a final adjustment may be made by loosening the setscrew and slightly rotating the drive pulley (6).

To Replace Volume Control Cable

Thread the cable (8) around the drive pulley (7) as shown in Fig. 7. Fasten the loops of the cable into the tension spring. To adjust the pointer, turn the control to the extreme clockwise direction and set the pointer so that the left-hand side of the pointer coincides with the left-hand edge of the rail. Crimp the pointer tab on the drive cable. A final adjustment of this pointer may be made by adjusting the pulley (7) on the volume control shaft after the scale has been replaced.

Band Indicator Control

The threading and assembly of the band indicator is self-explanatory from an inspection of Fig. 7. It must be adjusted

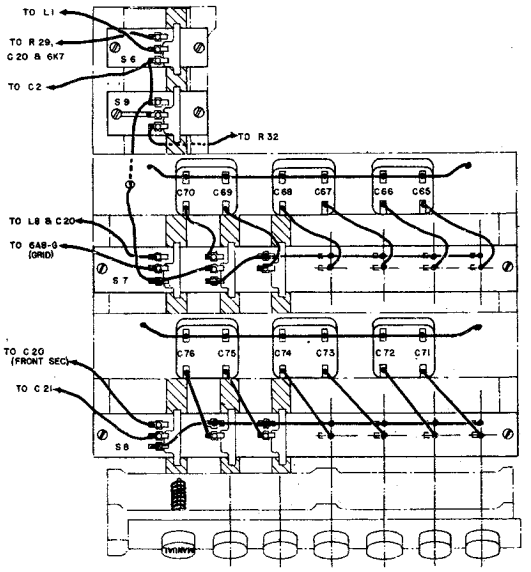

Fig. 8. "Touch Tuning" Mechanism

as indicated. The other end of the cord is looped through one end of the tension spring in back of the drive drum.

To replace the wire pointer drive cable (11), set the drive drum to the relative position as shown in Fig. 7. Loop the cord over the tab on the drum, and thread it around the drive pulley and idler pulleys and back to the tension spring on the drive drum. Slide the pointer (10) in place, as shown, but do not solder. Replace the dial scale and rotate the gang until the plates are fully meshed. Slide the pointer until it coincides with the last mark at the left end of the dial and then solder it to the wire cable (11).

To Replace Tone Control Cable

First set the tone control switch so that the pulley (6) is in the position shown. Thread the cable (5) as shown in Fig. 7 around the drive pulley (6), loop it in the notch as shown, then around the idler pulleys. Fasten the ends in the tension spring. Be sure that the tension spring does not touch either the idler or the drive pulley when the tone control is in either of the extreme positions. For adjustment with the dial in place by rotating the bracket (4) on the band switch shaft.

To Adjust "Automatic Vernier" Drive

The vernier drive used on this receiver includes a planetary reduction unit equipped with a clutch which automatically changes the reduction ratio. This clutch consists of a sleeve mounted on the knob shaft. To adjust, loosen the locking screw and move the sleeve (2) axially along the shaft until the cam surface in the end of the sleeve engages with the pin in the knob shaft. This engagement should take place at a point on the cam surface as near to the stop as possible and still allow complete release of the clutch.

To Change Dial Lamps

Dial lamps are located at either end of the dial scale assembly. Slide the dial lamp socket assembly off the projection at the top of the light reflector. The bulbs are readily replaced without removing the chassis from the cabinet.

GENERAL ELECTRIC CO.

MODEL F-96
Parts

"TOUCH-TUNING" RADIO

THREE-BAND A-C SUPERHETERODYNE

MODEL F-96

Stock No.	Description	List Price
RS-217	SOCKET—4-prong tube socket (Pkg. of 5)	$0.50
RS-223	SOCKET—Special socket for oscillator (Pkg. of 5)	.80
RS-356	SWITCH—A.F.C. switch (S-5)	.40
RS-370	SWITCH—Manual control switch (4 sections) (S-6, S-7, S-8, S-9)	8.15
RS-371	SWITCH—Tone control and power switch (S-3, S-4)	1.15
RS-372	SWITCH—Wave change switch (S-1)	2.50
RS-431	SPRING—Key spring, staple and spacer (Pkg. of 5)	.05
RS-433	SPRING—Latch bar spring (Pkg. of 5)	.10
RT-096	TRANSFORMER—Power transformer 115–125 V., 25–60 cycles (T-1)	9.30
RT-097	TRANSFORMER—Power transformer 115–125 V., 60 cycles (T-3)	5.95
RT-247	TRANSFORMER—3rd I.F. (A.F.C.) transformer (complete) (T-9)	3.95
RT-248	TRANSFORMER—1st or 2nd I.F. transformer and trimmers (no shield) (T-7, T-8)	1.20
RV-035	VOLUME CONTROL—2 Megohm volume control tap at 5,000 and 500,000 ohm (R-34)	.90
RW-014	WINDOW—Escutcheon window and rubber mounting	.45
RW-017	WINDOW—Push-button celluloid window (Pkg. of 25)	.10
*RW-101	WASHER—Felt washer for control shafts (Pkg. of 10)	.45
RW-403	WAVE TRAP—Wave trap (complete) (L-8, C-9)	.70
RX-027	ASSEMBLY—Chassis mounting bolts and washers	.15
	SPEAKER ASSEMBLY F-96	
RC-925	CONE—12-in. cone and voice coil assembly	1.25
*RC-991	CLAMP—Voice coil spider clamp	.05
*RP-015	PLUG—Male speaker plug	$0.20
RS-057	SPEAKER—12-in. speaker (complete)	6.80
*RS-416	SPRING—Voice coil leads spring (Pkg. of 2)	.10
RT-421	TRANSFORMER—Output transformer (T-2)	1.30
RX-030	ASSEMBLY—Speaker mounting cushions and nuts	.10
	DIAL SCALE MECHANISM	
RB-155	BRACKET—Band change bracket	.05
RB-604	BUSHING—Volume control cable drive bushing	.10
RC-869	CABLE—Volume or tone control pointer cable (Pkg. of 5)	.30
RC-870	CABLE—Dial pointer drive cable (Pkg. of 5)	.70
RC-871	CABLE—Tuning condenser drive cable (Pkg. of 5)	.45
*RD-013	DRUM—Condenser drive drum	.35
RD-062	DIAL—Dial scale	3.50
RL-920	LAMP—Pilot lamp 6.3 V., .25 amp. (Pkg. of 10)	1.50
*RP-049	PULLEY—Pointer cable pulley	.15
RP-073	POINTER—Volume or tone control pointer (Pkg. of 5)	.10
RP-075	PULLEY—Small drive cord idler pulley (Pkg. of 6)	.20
RP-076	PULLEY—Tone control cord drive pulley	.15
RP-077	POINTER—Dial scale pointer (Pkg. of 5)	.90
RP-091	PULLEY—Tuning drive cord idler pulley	.10
RS-218	SOCKET—Lamp socket assembly	.10
*RS-401	SPRING—Tuning condenser cable tension spring (Pkg. of 2)	.20
RS-426	SPRING—Volume or tone control cable tension spring (Pkg. of 5)	.10
RX-023	ASSEMBLY—Band indicator, cord and spring	.20

* Used on previous receivers.

REPLACEMENT PARTS LIST

Stock No.	Description	List Price
	CHASSIS ASSEMBLY	
*RB-008	BOARD—Terminal board (2 terminals)	$0.10
*RB-009	BOARD—Terminal board (1 terminal)	.15
*RB-023	BOARD—Terminal board (4 terminals)	.10
*RB-049	BOARD—Antenna ground terminal board	.10
*RB-053	BOARD—Terminal board (3 terminals)	.10
RB-062	BOARD—Terminal board (6 terminals)	.10
RB-606	LATCH BAR—Latch bar for push buttons	.20
RB-607	BUTTON—Push button (Pkg. of 5)	.10
RC-002	CAPACITOR—.00075 Mfd., 200 V. paper (C-41)	.25
*RC-023	CAPACITOR—.005 Mfd., 600 V. paper (C-48)	.25
*RC-042	CAPACITOR—.01 Mfd., 1,000 V. paper (C-53, C-64)	.30
*RC-091	CAPACITOR—.05 Mfd., 400 V. paper (C-34, C-39, C-40, C-43, C-44, C-46, C-49, C-50)	.30
*RC-123	CAPACITOR—1 Mfd., 400 V. paper (C-35, C-38, C-42, C-45, C-47, C-51, C-52)	.35
*RC-150	CAPACITOR—.25 Mfd., 400 V. paper (C-37)	.35
*RC-204	CAPACITOR—15 Mmf., mica (C-26)	.25
RC-206	CAPACITOR—50 Mmf., mica (special for oscillator) (C-21)	.25
RC-208	CAPACITOR—35 Mmf., mica (C-31)	.25
*RC-242	CAPACITOR—150 Mmf., mica (C-28, C-29)	.25
*RC-259	CAPACITOR—250 Mmf., mica (C-25, C-55)	.30
RC-308	CAPACITOR—750 Mmf., mica (C-30)	.35
*RC-360	CAPACITOR—2,850 Mmf., mica (C-23)	.50
RC-364	CAPACITOR—1,300 Mmf., mica (C-24)	.35
RC-427	CAPACITOR—Wet electrolytic 16 Mfd. 450 V. (C-60)	1.05
RC-428	CAPACITOR—Wet electrolytic 30 Mfd. 450 V. (C-61)	1.20
RC-579	CAPACITOR—Dry electrolytic 10 Mfd. 12 V.; 4 Mfd., 400 V.; 10 Mfd., 400 V.; 25 Mfd., 25 V. (C-59, C-62, C-63, C-64)	1.70
RC-650	CAPACITOR—Double trimmer "B" and "D" band antenna 5-40 Mmf. (C-1, C-2)	.25
RC-651	CAPACITOR—Double trimmer "B" and "D" band R.F. 2-20 Mmf. (C-7, C-8)	.25
RC-652	CAPACITOR—"B" band padder 175-350 Mmf. (C-6)	.30
RC-655	CAPACITOR—Double trimmer 3rd I.F. transformer (C-16, C-17)	1.55
RC-661	CAPACITOR—"B," "C" and "D" band oscillator triple trimmer (C-3, C-4, C-5)	.60
RC-665	CAPACITOR—Double trimmer antenna or oscillator selector 200-430 Mmf. and 140-320 Mmf. (C-65, C-66, C-71, C-72)	.50
RC-666	CAPACITOR—Double trimmer, antenna or oscillator selector 80-225 Mmf. and 70-170 Mmf. (C-67, C-68, C-73, C-74)	.45
RC-667	CAPACITOR—Double trimmer, antenna or oscillator selector 30-100 Mmf. and 10-50 Mmf. (C-69, C-70, C-75, C-76)	.40
RC-673	CAPACITOR—Double trimmer 1st or 2nd I.F. transformer (C-12, C-13, C-14, C-15)	.45
RC-722	CONDENSER—3-gang tuning condenser (C-20)	5.10
*RC-755	CAPACITOR—Line capacitor .01–.01 Mfd., 250 V. A.C. (C-56)	.40
*RC-863	CORD—Power cord with plug	.65
*RC-992	CUSHION—Gang condenser mounting cushions (Pkg. of 3)	$0.10
RC-1968	CUSHION—Cushion for push button assembly (Pkg. of 5)	.05
RC-8025	CABLE—Speaker cable and female plug	.60
RD-201	DRIVE—Vernier drive mechanism	1.55
RE-023	ESCUTCHEON—Push button escutcheon	.70
RE-024	ESCUTCHEON—Escutcheon for dial (complete)	2.10
*RG-001	GRID CLIP—Control grid clip (Pkg. of 5)	.10
RK-017	KNOB—Control knob (Pkg. of 5)	.40
RK-018	KNOB—Band or A.F.C. switch knob (wing) (Pkg. of 5)	.40
RK-201	KEY—Push button key (Pkg. of 5)	.15
RL-053	COIL—"B," "C" & "D" band antenna coils (T-6)	1.20
RL-139	COIL—"B," "C" and "D" band R.F. coils (T-4)	1.10
RL-257	COIL—"B," "C" and "D" band oscillator coils (T-5)	1.25
RQ-1241	RESISTOR—180 ohm, ½ watt carbon (R-25) (Pkg. of 5)	.70
RQ-1247	RESISTOR—330 ohm, ½ watt carbon (R-3, R-13) (Pkg. of 5)	.70
RQ-1249	RESISTOR—390 ohm, ½ watt carbon (R-31) (Pkg. of 5)	.70
RQ-1257	RESISTOR—820 ohm, ½ watt carbon (R-4) (Pkg. of 5)	.70
RQ-1259	RESISTOR—1,000 ohm, ½ watt carbon (R-15) (Pkg. of 5)	.70
RQ-1269	RESISTOR—2,700 ohm, ½ watt carbon (R-28) (Pkg. of 5)	.70
RQ-1271	RESISTOR—3,300 ohm, ½ watt carbon (R-32) (Pkg. of 5)	.70
RQ-1275	RESISTOR—4,700 ohm, ½ watt carbon (R-5) (Pkg. of 5)	.70
RQ-1287	RESISTOR—15,000 ohm, ½ watt carbon (R-23) (Pkg. of 5)	.70
RQ-1299	RESISTOR—47,000 ohm, ½ watt carbon (R-6, R-7, R-11, R-24) (Pkg. of 5)	.70
RQ-1303	RESISTOR—68,000 ohm, ½ watt carbon (R-2, R-14) (Pkg. of 5)	.70
RQ-1307	RESISTOR—100,000 ohm, ½ watt carbon (R-17, R-18) (Pkg. of 5)	.70
RQ-1313	RESISTOR—180,000 ohm, ½ watt carbon (R-19) (Pkg. of 5)	.70
RQ-1315	RESISTOR—220,000 ohm, ½ watt carbon (R-22, R-26) (Pkg. of 5)	.70
RQ-1323	RESISTOR—470,000 ohm, ½ watt carbon (R-1, R-10, R-27, R-29) (Pkg. of 5)	.70
RQ-1324	RESISTOR—510,000 ohm, ½ watt carbon (R-21) (Pkg. of 5)	.70
RQ-1339	RESISTOR—2.2 Megohm, ½ watt carbon (R-16, R-20) (Pkg. of 5)	.70
RQ-1475	RESISTOR—4,700 ohm, 1 watt carbon (R-9) (Pkg. of 5)	.70
RQ-1499	RESISTOR—47,000 ohm. 1 watt carbon (R-8)	.20
RR-727	RESISTOR—410 ohm, 1 watt moulded (R-36)	.15
RR-733	RESISTOR—Candohm tapped resistor (R-35)	.60
*RS-139	SHIELD—3rd I.F. transformer shield	.20
RS-175	SHIELD—1st or 2nd I.F. transformer shield	.25
RS-179	SHIELD—Tube shield (includes base)	.10
*RS-200	SOCKET—8-pin octal base socket (Pkg. of 5)	.75
RS-215	SOCKET—6-prong tube socket (Pkg. of 5)	.60

* Used on previous receivers.

(Prices subject to change without notice)

©John F. Rider, Publisher

MODELS G-105, G-106
Specifications
Tuner Data

GENERAL ELECTRIC CO.

Fig. 12. Pre-timer Wiring Diagram

Physical Specifications

Model	G-105	G-106
Height	42 inches	43 inches
Width	28¼ inches	29½ inches
Depth	15⅝ inches	17⅛ inches
Weight Packed	100 lbs	130 lbs

Manual Tuning Drive Ratio . . 50:1

Tuning Frequency Range

Band "B"	540–1575 kc
Band "C"	1575–5700 kc
Band "D"	5700–18,000 kc

Intermediate Frequency. 455 kc

Electrical Power Output

Undistorted	11.0 watts
Maximum	13.0 watts

Tone Control. . . . . 5 Position

Loud-speaker—Electrodynamic

Outside Cone Diameter. . 12-inch
Voice Coil Impedance. . . 3.5 ohms at 400 cycles
Field Coil Resistance. . . . 460 ohms (cold)

Tubes

R.F. Amplifier	GE-6K7
Converter and Oscillator	GE-6A8G
I.F. Amplifier	GE-6K7
Detector and A.V.C.	GE-6H6
Audio Driver	GE-6F5
Audio Inverter	GE-6J5G
Audio Power Amplifier	(2) GE-6V6G
Tuning Indicator	GE-6U5
Rectifier	GE-5U4G
Dial Lamp	(2) MAZDA No. 44

TOUCH-TUNING

The General Electric "Touch-Tuning" system consists of three essential units: the keyboard assembly of fourteen keys, used for touch-tuning control; the motor and drive mechanism; and the split contact segment with its adjustable station buttons, allowing a set up of thirteen different stations to be tuned automatically.

Thirteen keys are used for the selection of pre-set stations while the No. 14 key is used to turn power "Off." Pressing-in any key will lock the key in a semi-depressed position and release any other that may be in the circuit, thus the selection of any station by a station key will release the "Off" key, turning the set power on.

The tuning motor is operated as a 23-volt split-phase induction motor using capacitor C-51 as the phase shifting device. On the Model G-105, the 23 volts is supplied directly from the receiver power transformer while on the Model G-106 the voltage is obtained from a separate transformer which operates the motor only and is always connected to the power line. In this receiver the "Off" key resembles a station key in its operation and is set up when the receiver is assembled at the factory. A special button is assembled on the fan tail assembly, at the rear of the gang condenser, for the "Off" position. This button is white to distinguish it from the regular station buttons and the contact point is narrower so that no bounce back is allowed on the "Off" position.

Fig. 6 shows a simplified schematic of the control circuit and the following cycle of operation may be traced very easily. When a key is depressed, it completes the 23-volt circuit through the button making contact with the contact segment (CT) and energizes one winding of the motor. The other winding on the motor is energized through the condenser C-51. The direction of rotation of the motor is dependent upon whichever half of the contact segment (CT) that the station button rubber cone hub (I) with the dial drive wheel (D), (see Fig. 9) which in turn rotates the gang condenser and contact segment (CT). This operation continues until the insulated segment (1) breaks the station button circuit to the contact segment and removes voltage from the motor. The inertia in the tuning system drives the insulated segment past the station button and makes contact with the other half of the contact segment. This energizes the other winding of the motor and causes the motor to reverse. The brake on the dial drive wheel does not allow the tuning system to store up enough inertia to go past this insulated strip on the reversal of the motor and thus allows the station button to come to rest on the narrow insulated segment, thus stopping the tuning operation to this pre-set position.

The motor scan switch S-7 is incorporated to allow finger-tip control of the motor drive. Normally, the switch contacts are open and control of the motor is had by closing either of the two sides of the switch dependent upon the direction of travel desired.

On 25-cycle receivers, two motor capacitors (RC-597) are used to obtain the necessary phase shift. The brake pad tension should be re-adjusted when operating a 25-cycle receiver on a 60-cycle circuit.

Silent Tuning

During period of motor operation, either for automatic station selection or for scanning, silent tuning is incorporated. This is accomplished by a circuit which gives both instantaneous cut-off of the audio amplifier and time delay in restoring the response. By reference to the schematic Fig. 5, it will be observed that one half of the 6H6 diode is used to rectify the 23 volts A.C. available from the motor and the resulting D.C. voltage is used to bias the audio amplifier tube to cut-off. Note that the charging time of the bias circuit is only determined by the diode resistance which is very small. The time required for the audio amplifier (6F5) to return to normal bias however, is determined by the product of R-26 and C-56 and is therefore controllable.

Drive Wheel Brake Adjustment

A friction brake has been incorporated on the drive wheel circumference (D) to accomplish accurate stopping of the motor driven tuning system. When the button passes into the insulated segment it will easily over-ride the insulated segment on the contactor drum, since this segment is very narrow. If this condition continues an oscillatory motion or "hunting", is set up and the motor will not come to rest as long as the station key is pressed. The brake, located at the left side of dial scale, should be adjusted on normal line voltage so that the motor only has to make one or two reversals.

This adjustment should be made under an average operating line voltage and allowance made for changes in voltage over the 24-hour period.

Lubrication

For smooth and noiseless operation of the tuning system, it is absolutely necessary to keep it well lubricated.

Contactor Drum—use thin film of petroleum jelly
Dial Pointer Guide Rods—use thin film of petroleum jelly
Motor Bearings—these are oil-less type and do not require lubrication

Dial Mechanism

A sketch showing the threading of the dial mechanism controls is shown in Fig. 9.

The manual drive involves two extra parts in addition to the motor drive; these are, the manual rubber drive cone (J) and its shaft (C), see Fig. 9. If the idler drive wheel (D) on which the manual drive cone engages is set up too high, the manual drive cone is liable to wedge underneath the idler drive wheel, thus not allowing the motor drive cone to engage when using Touch-Tuning. If this occurs by only a normal pressure on manual control, then the idler drive wheel must be moved down and the motor drive cone adjusted accordingly. The bracket which mounts the large idler drive wheel has slots and mounting screws so that idler drive wheel can be moved either up or down.

The 25-cycle receivers as they leave the factory have a larger rubber manual drive cone than the 60-cycle receivers. The cone for the 60-cycle receiver may be substituted for replacement provided the idler drive wheel is lowered slightly.

REMOTE CONTROL

The GM-8 Remote Control is merely another station keyboard assembly that is wired in parallel with the regular station keys. In addition, a remotely controlled motor is used to either raise or lower the volume at the receiver. By referring to Fig. 11, the details of the operation of this device may be readily understood. Leads No. 2 to No. 7 are the automatic tuning button control leads that parallel any six of the regular receiver station keys. Lead No. 1 supplies 23 volts to the remote keyboard assembly while leads No. 8 and No. 9 are the phase-reversing leads to the volume control motor.

When the remote control is attached to a receiver, then the semi-depressed positions of the receiver push-button keys may or may not indicate which station is tuned in. This will then depend upon whether the receiver was last operated from the remote control or from the station keys of the receiver itself. For this reason, the key assembly of the remote control has not been equipped with a latch bar. All keys of the remote control key assembly are wired in series to avoid possibility of two keys completing the circuit to the motor at the same time.

The remote volume control motor uses a phase-shifting resistor in place of a condenser as used on the tuning motor when operating from a 50 or 60-cycle power supply. When operation is desired from 25 cycles replace the 30-ohm, 10-watt resistor across the volume control motor terminals with a 60 microfarad motor capacitor (RC-597).

The mechanical installation of the volume control motor is shown in Fig. 10. For full installation instructions refer to service notes RGMS-8.

Remote Control Notes

1. If key assembly on remote control unit is too high in the case, it is possible that one or all of the keys may be slightly depressed at all times so as to cause faulty operation of the system. To remedy, lower the complete assembly by loosening the two setscrews on the inside of the case and then lower assembly—tighten setscrews.

2. The tension of the friction clutch on the remote control motor is adjusted at the factory and should not require resetting. If it is set too tight, the volume control may be damaged when "VOL. DEC." key is held in a depressed position after the volume control is turned to the minimum position. If this slip clutch is too loose the control will fail to turn.

AUTOMATIC STATION PRE-TIMER
G-106

The Pre-timer is quite similar to the remote control in operation in that it works in parallel with the regular station keys; turning "On" and "Off" power and tuning stations. The operation, however, instead of being controlled manually, is controlled by a synchronous motor. This allows a parallel circuit to be made with a selected station key by a pre-set timing contact.

The 96 timing contacts project through slots in the clock panel and are supported by two metal plates at the rear. A molded carriage is propelled from left to right during the 12 hours of the AM period and from right to left during the PM period, by means of a lead screw having right and left-handed threads, which is rotated continuously by the clock motor. Projections on the timing contacts engage sliders on the carriage corresponding to the stations to which the contacts are set. When the contact is made the pre-timer energizes the corresponding station button on the fantail (in back of the gang condenser) and thus drives the tuning motor to the desired station. In order to differentiate between AM and PM operations, a limit switch is provided that is operated by the carriage at the end of its travel. This switch causes the AM sliders to be energized during the AM period, and the PM sliders during the PM period.

As the contact carriage moves very slowly, the accuracy with which it makes and breaks the control circuits is not sufficient. In order to obtain accurate timing, the contacts on the carriage are arranged so as to engage the sliders several minutes before and to disengage several minutes after the quarter hour and a cam-operated switch is provided in series with the common return lead. This switch closes the control circuit exactly on the quarter hour, and opens it after ample time has elapsed for the completion of the tuning operation, in this case, about ten seconds.

The clock motor is of the self-starting synchronous type with enclosed gearing running in a bath of oil. It operates on the 110-volt power supply.

The circuit controlling the receiver is shown on the lower left-hand portion of Fig. 5. The wiring diagram to the clock panel is shown in Fig. 12.

Phonograph Connections

Fig. 13 shows a simple sketch for connecting a crystal or high impedance magnetic pick-up into the G-105 or G-106 circuit for the reproduction of phonograph recording. This method uses a two-circuit jack and is connected into the receiver by opening the circuit between C-32 and the volume control (R-19) and connecting the jack terminals as shown. A telephone plug is attached to the pick-up leads; and for phonograph operation, it is merely necessary to insert it into the jack. The jack may be mounted on the rear chassis deck and all connecting leads should be properly shielded to prevent pick-up.

When the pick-up is connected as suggested, the regular radio volume and tone controls work for both radio and phonograph reproduction.

NOTE.—In most cases a suitable loading circuit composed of a resistor or resistor and capacitor network should be used across the pick-up leads when using a crystal type unit.

Phonograph Connections Fig. 13.

©John F. Rider, Publisher

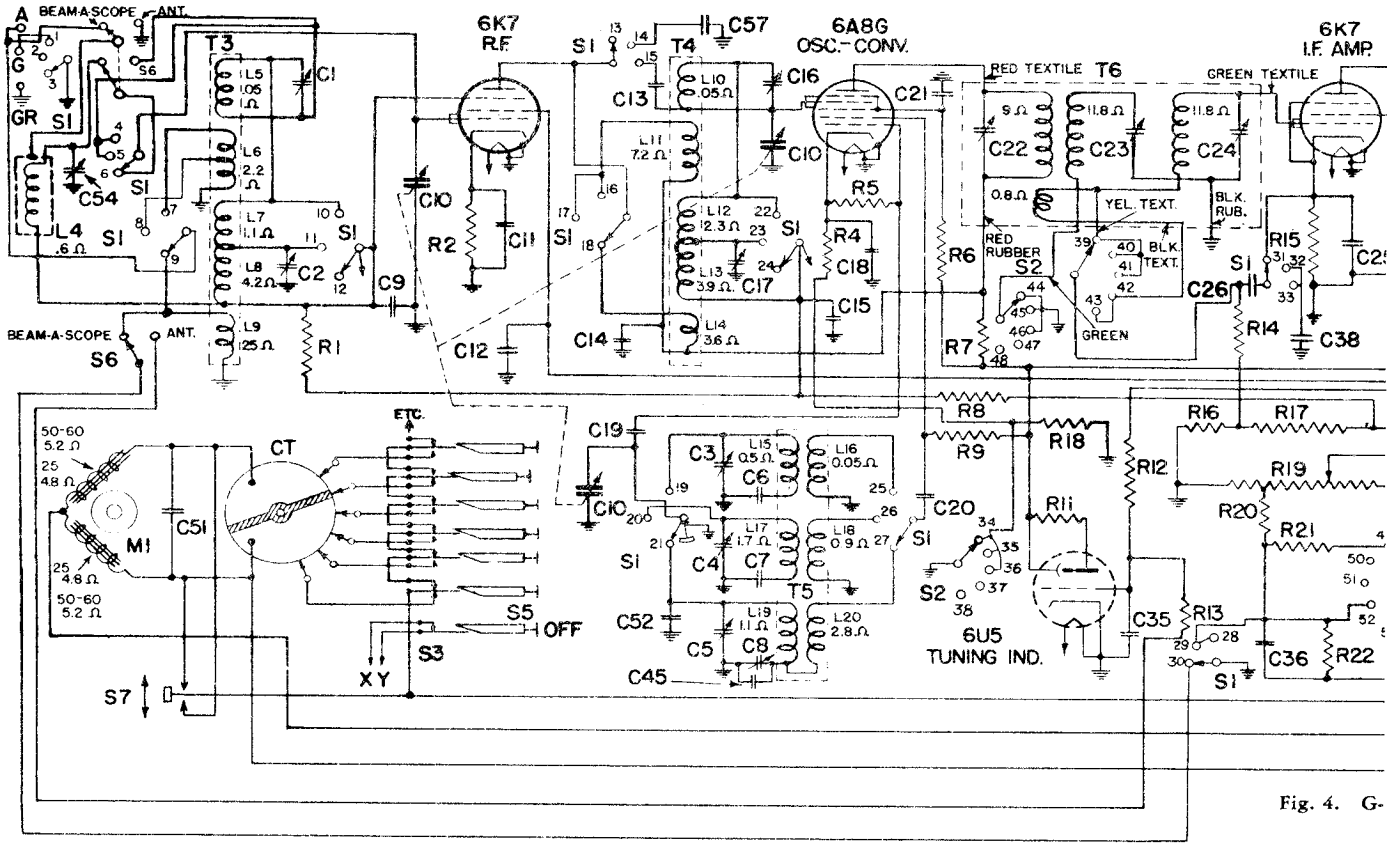

Fig. 4. G-

SYMBOL	DESCRIPTION
R-1	220,000 Ohm Carbon Resistor
R-2	330 Ohm Carbon Resistor
R-4	330 Ohm Carbon Resistor
R-5	47,000 Ohm Carbon Resistor
R-6	39,000 Ohm Carbon Resistor
R-7	1,000 Ohm Carbon Resistor
R-8	1.8 Megohm Carbon Resistor
R-9	22,000 Ohm Carbon Resistor
R-11	1 Megohm Carbon Resistor
R-12	2.2 Megohm Carbon Resistor
R-13	2.7 Megohm Carbon Resistor
R-14	2.2 Megohm Carbon Resistor
R-15	330 Ohm Carbon Resistor
R-16	56,000 Ohm Carbon Resistor
R-17	220,000 Ohm Carbon Resistor
R-18	330 Ohm Carbon Resistor
R-19	2 Megohm, 1 Megohm Tap. Vol. Control
R-20	68,000 Ohm Carbon Resistor
R-21	68,000 Ohm Carbon Resistor
R-22	1.2 Megohm Carbon Resistor
R-23	1,000 Ohm Carbon Resistor
R-24	1,000 Ohm Carbon Resistor
R-25	47,000 Ohm Carbon Resistor
R-26	470,000 Ohm Carbon Resistor
R-27	1.5 Megohm Carbon Resistor
R-28	82,000 Ohm Carbon Resistor
R-29	1.2 Megohm Carbon Resistor
R-30	68,000 Ohm Carbon Resistor
R-31	68,000 Ohm Carbon Resistor
R-32	220,000 Ohm Carbon Resistor
R-33	220,000 Ohm Carbon Resistor
R-34	230 Ohm Resistor (W.W.)
R-35	4 Sections Voltage Divider
1	1600 Ohms
2	9000 Ohms
3	9000 Ohms
4	11 Ohms
R-36	1,000 Ohm Carbon Resistor
R-37	1,000 Ohm Carbon Resistor

SYMBOL	DESCRIPTION
R-38	470,000 Ohm Carbon Resistor
R-40	20 Ohm W.W. Resistor
C-1	5-40 MMF. "D" Ant. Trimmer
C-2	5-40 MMF. "B" Ant. Trimmer
C-3	2-20 MMF. "D" Osc. Trimmer
C-4	2-20 MMF. "C" Osc. Trimmer
C-5	7-23 MMF. "B" Osc. Trimmer
C-6	3200 MMF. Mica Capacitor
C-7	2100 MMF. Mica Capacitor
C-8	160-375 MMF. "B" Padder
C-9	.05 MFD. Paper Capacitor
C-10	10-450 MMF. Tuning Capacitor
C-11	.05 MFD. Paper Capacitor
C-12	.05 MFD. Paper Capacitor
C-13	18 MMF. Mica Capacitor
C-14	.1 MFD. Paper Capacitor
C-15	.05 MFD. Paper Capacitor
C-16	2-20 MMF. "D" R.F. Trimmer
C-17	3-30 MMF. "B" R.F. Trimmer
C-18	.05 MFD. Paper Capacitor
C-19	50 MMF. Silver Plated Capacitor
C-20	4,700 MMF. Mica Capacitor
C-21	.05 MFD. Paper Capacitor
C-22	100-230 MMF. 1st I.F. Pri. Trimmer
C-23	50-135 MMF. 1st I.F. Sec. Trimmer
C-24	50-135 MMF. 1st I.F. Tert. Trimmer
C-25	.05 MFD. Paper Capacitor
C-26	.05 MFD. Paper Capacitor
C-27	50-135 MMF. 2nd I.F. Pri. Trimmer
C-28	100-230 MMF. 2nd I.F. Sec. Trimmer
C-29	150 MMF. Mica Capacitor
C-30	150 MMF. Mica Capacitor
C-31	.05 MFD. Paper Capacitor
C-32	.02 MFD. Paper Capacitor
C-33	.0055 MFD. Paper Capacitor
C-34	.002 MFD. Paper Capacitor
C-35	.05 MFD. Paper Capacitor
C-36	.0055 MFD. Paper Capacitor
C-37	.02 MFD. Paper Capacitor

SYMBOL	DESCRIPTION
C-38	.01 MFD. Paper Capacitor
C-39	270 MMF. Mica Capacitor
C-40	.02 MFD. Paper Capacitor
C-41	.05 MFD. Paper Capacitor
C-42	.05 MFD. Paper Capacitor
C-43	.003 MFD. Paper Capacitor
C-44	.003 MFD. Paper Capacitor
C-45	175 MMF. Compensating Capacitor
C-46	25 MFD. 25 V. W.V. Dry Electro.
C-47	10 MFD. 400 V. W.V. Dry Electro.
C-48	30 MFD. 450 V. W.V. Wet Electro.
C-49	30 MFD. 450 V. W.V. Wet Electro.
C-50	.01-.01 MFD. 250 V A-C Line Capacitor
C-51	60 MFD. 40 V A-C Dry Electro.
C-52	20 MMF. Compensating Capacitor
C-54	2-20 MMF. Trimmer Capacitor
C-55	.25 MFD. Paper Capacitor
C-56	.25 MFD. Paper Capacitor
C-57	82 MMF. Mica Capacitor
T-1	Power Transformer, 50-60 cycles—25 cycles
T-2	Output Transformer
T-3	Ant. Transformer
T-4	R.F. Transformer
T-5	Osc. Transformer
T-6	1st I.F. Transformer
T-7	2nd I.F. Transformer
L-1	Field Coil 460 Ohms cold
L-2	Hum Buck Coil
L-3	Voice Coil, 3.5 Ohms
L-4	Beam-a-Scope
CT	Contactor Assembly
P-1	Pilot Lamp 6.3 V.—.25 Amp.
P-2	Pilot Lamp 6.3 V.—.25 Amp.
P-3	Tuning Lamp 25 V.—.2 Amp.
S-1	Band Change Switch
S-2	Tone Control Switch
S-3	Power Supply Switch

SYMBOL	
S-4	Tuning Lam
S-5	Station Sele
S-6	Beam-a-Scop
S-7	Motor Scan
M	Tuning Mot

Cycles

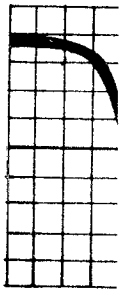

(a) Sha

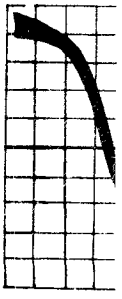

(b) Ex

©John F. Rider, Publisher

TRIC CO.

MODEL G-105
Schematic, Dial Data

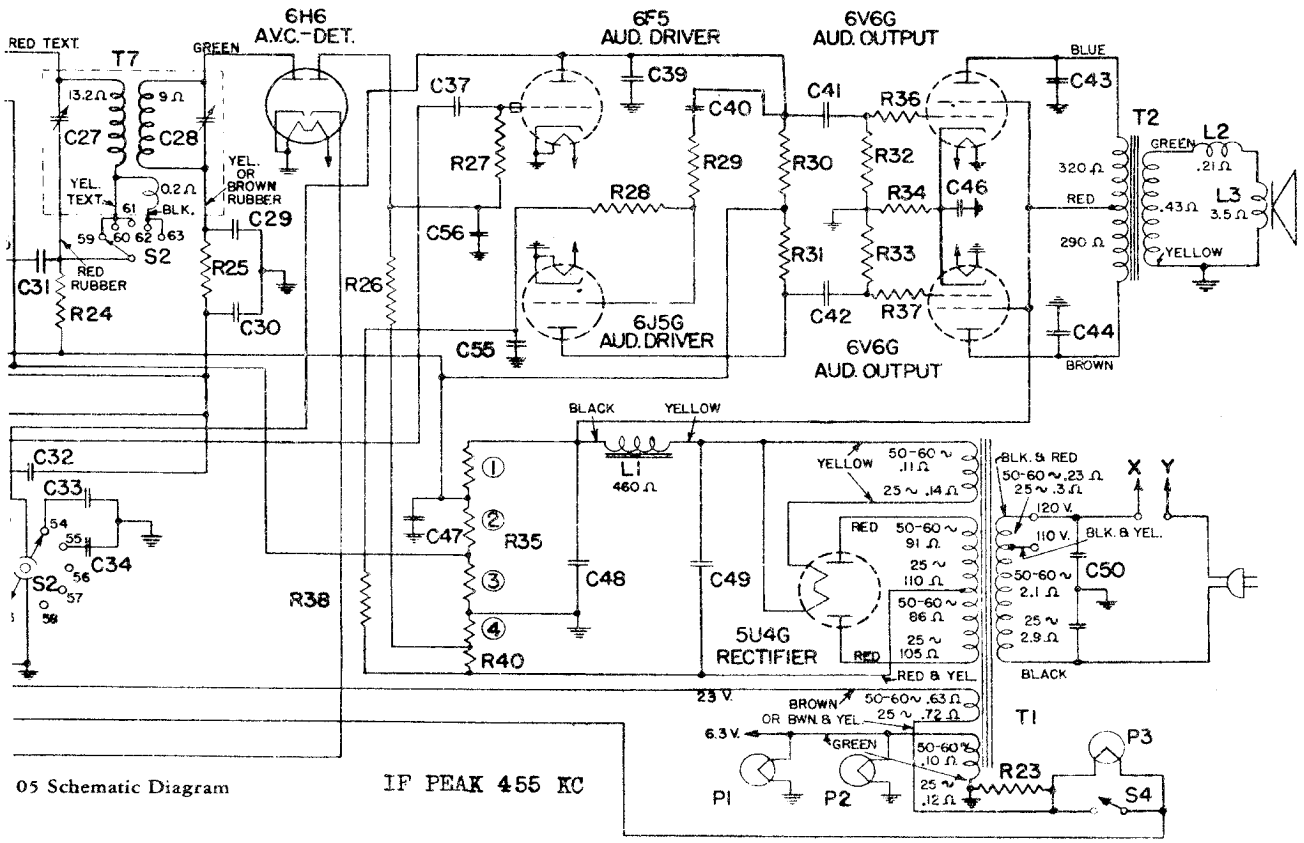

05 Schematic Diagram

DESCRIPTION
Switch
or Switch
—Ant. Switch
witch
r 23 V. 50-60 Cycles,—25

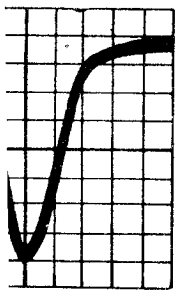

position

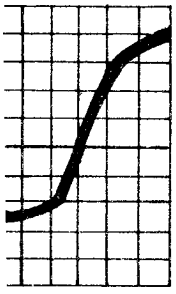

nded position

Fig. 2. I.F. curves taken on G-E oscilloscope OFM-1

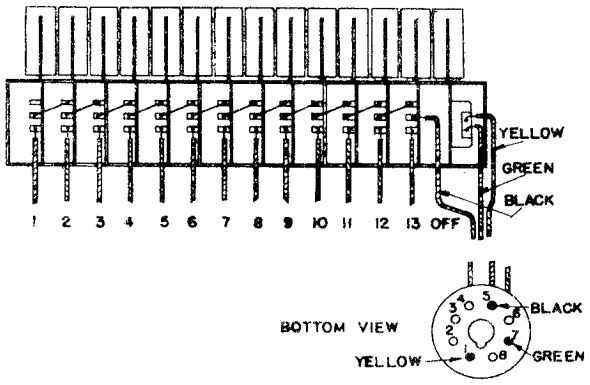

Fig. 7. Keyboard Wiring Diagram—G105

Stopping Accuracy

The exact location at which the dial pointer will come to rest may be made more accurate by slightly lowering the insulated segment (X) on the contactor wheel as shown in Fig. 8. Merely loosen the two screws (Y) and lower the yoke, (Z).

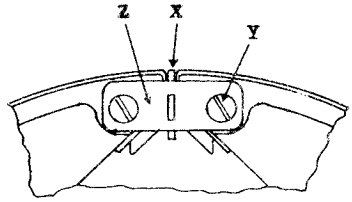

Fig. 8

The proper adjustment is made at the factory and should not require alteration provided the contactor drum is kept well lubricated.

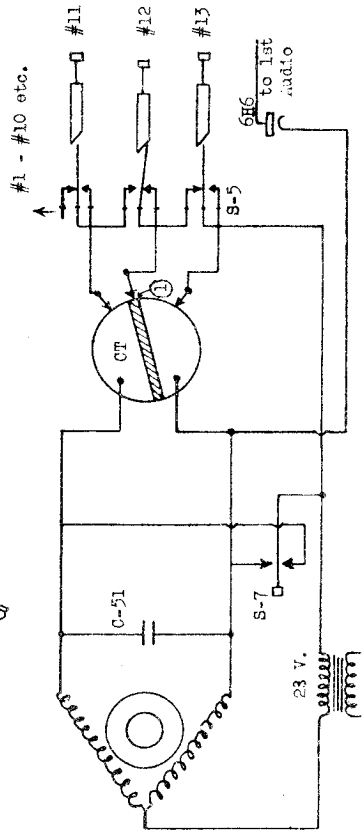

Fig. 6. Schematic of Touch-Tuning System

MODEL G-106
Schematic

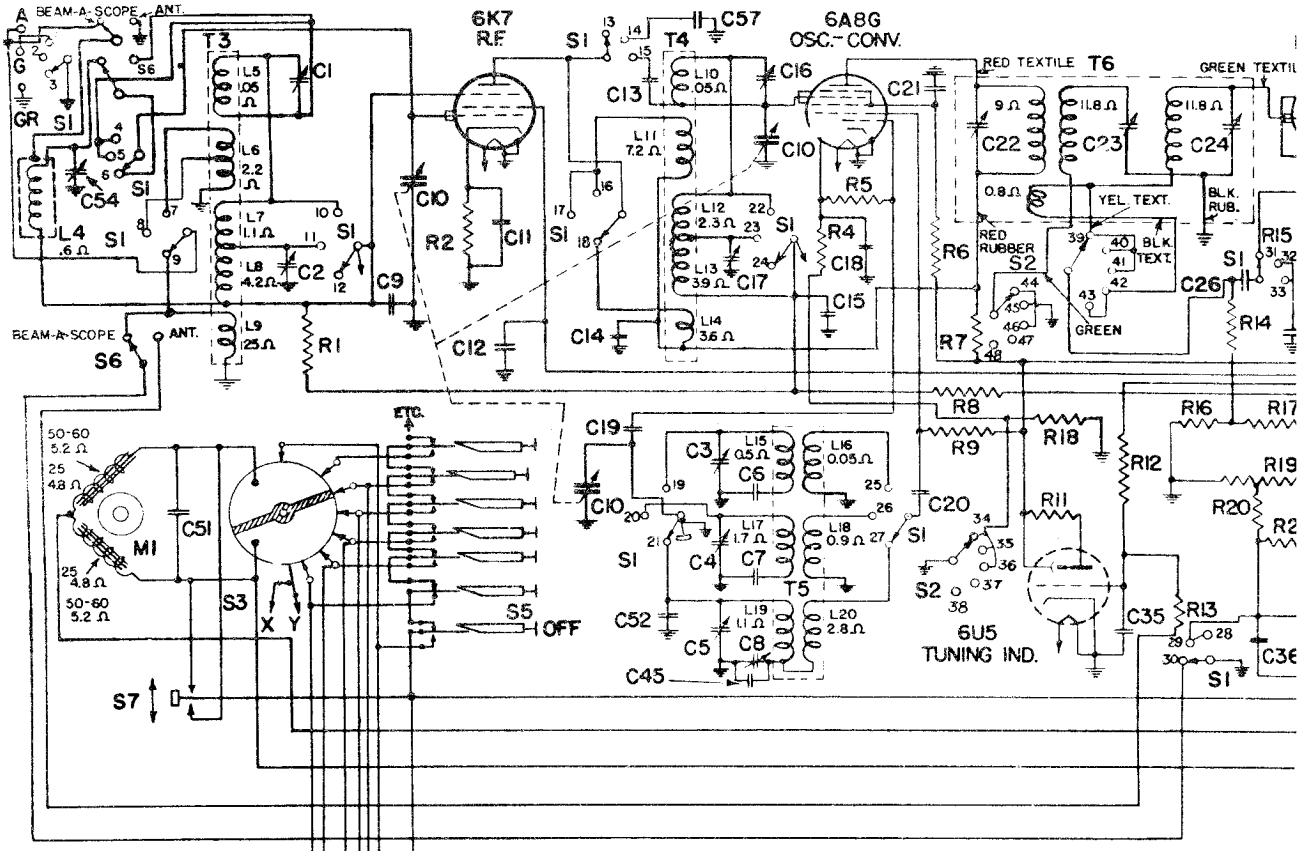

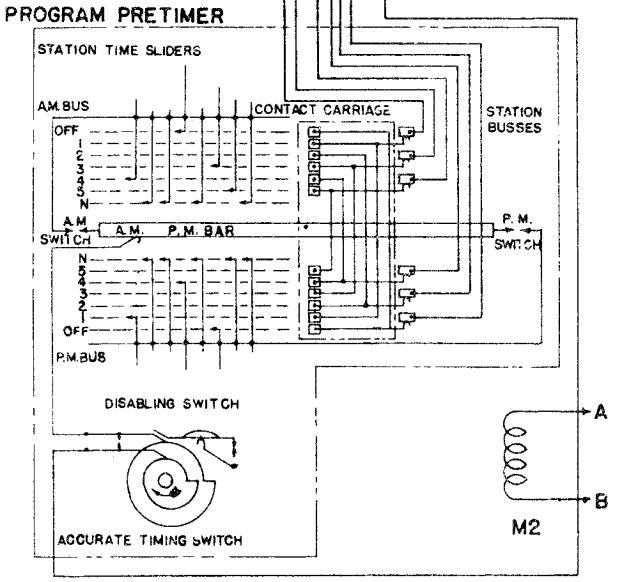

SYMBOL	DESCRIPTION
R-1	Resistor Carbon 220,000 Ohms
R-2	Resistor Carbon 330 Ohms
R-4	Resistor Carbon 330 Ohms
R-5	Resistor Carbon 47,000 Ohms
R-6	Resistor Carbon 39,000 Ohms
R-7	Resistor Carbon 1,000 Ohms
R-8	Resistor Carbon 1.8 Megohms
R-9	Resistor Carbon 22,000 Ohms
R-11	Resistor Carbon 1 Megohm
R-12	Resistor Carbon 2.2 Megohms
R-13	Resistor Carbon 2.7 Megohms
R-14	Resistor Carbon 2.2 Megohms
R-15	Resistor Carbon 330 Ohms
R-16	Resistor Carbon 56,000 Ohms
R-17	Resistor Carbon 220,000 Ohms
R-18	Resistor Carbon 330 Ohms
R-19	Volume Control 2 Megohms
R-20	Resistor Carbon 68,000 Ohms
R-21	Resistor Carbon 68,000 Ohms
R-22	Resistor Carbon 1.2 Megohms
R-23	Resistor Carbon 1,000 Ohms
R-24	Resistor Carbon 1,000 Ohms
R-25	Resistor Carbon 47,000 Ohms
R-26	Resistor Carbon 470,000 Ohms
R-27	Resistor Carbon 1.5 Megohm
R-28	Resistor Carbon 82,000 Ohms
R-29	Resistor Carbon 1.2 Megohms
R-30	Resistor Carbon 68,000 Ohms
R-31	Resistor Carbon 68,000 Ohms
R-32	Resistor Carbon 220,000 Ohms
R-33	Resistor Carbon 220,000 Ohms
R-34	Resistor W.W. 230 Ohms
R-35	4 Sections Voltage Divider
1	1600 Ohms
2	9000 Ohms
3	9000 Ohms
4	11 Ohms

SYMBOL	
R-36	Resisto
R-37	Resisto
R-38	Resisto
R-40	Resisto
C-1	Capacit Ant.
C-2	Capacit Ant.
C-3	Capacit Osc.
C-4	Capacit Osc.
C-5	Capacit Osc.
C-6	Capacit
C-7	Capacit
C-8	Capacit
C-9	Capacit
C-10	Capacit
C-11	Capacit
C-12	Capacit
C-13	Capacit
C-14	Capacit
C-15	Capacit
C-16	Capacit R.F.
C-17	Capacit R.F.
C-18	Capacit
C-19	Capacit
C-20	Capacit
C-21	Capacit
C-22	Capacit I.F.
C-23	Capacit I.F.
C-24	Capacit I.F.

Fig. 5. G-106 Sc

©John F. Rider, Publisher

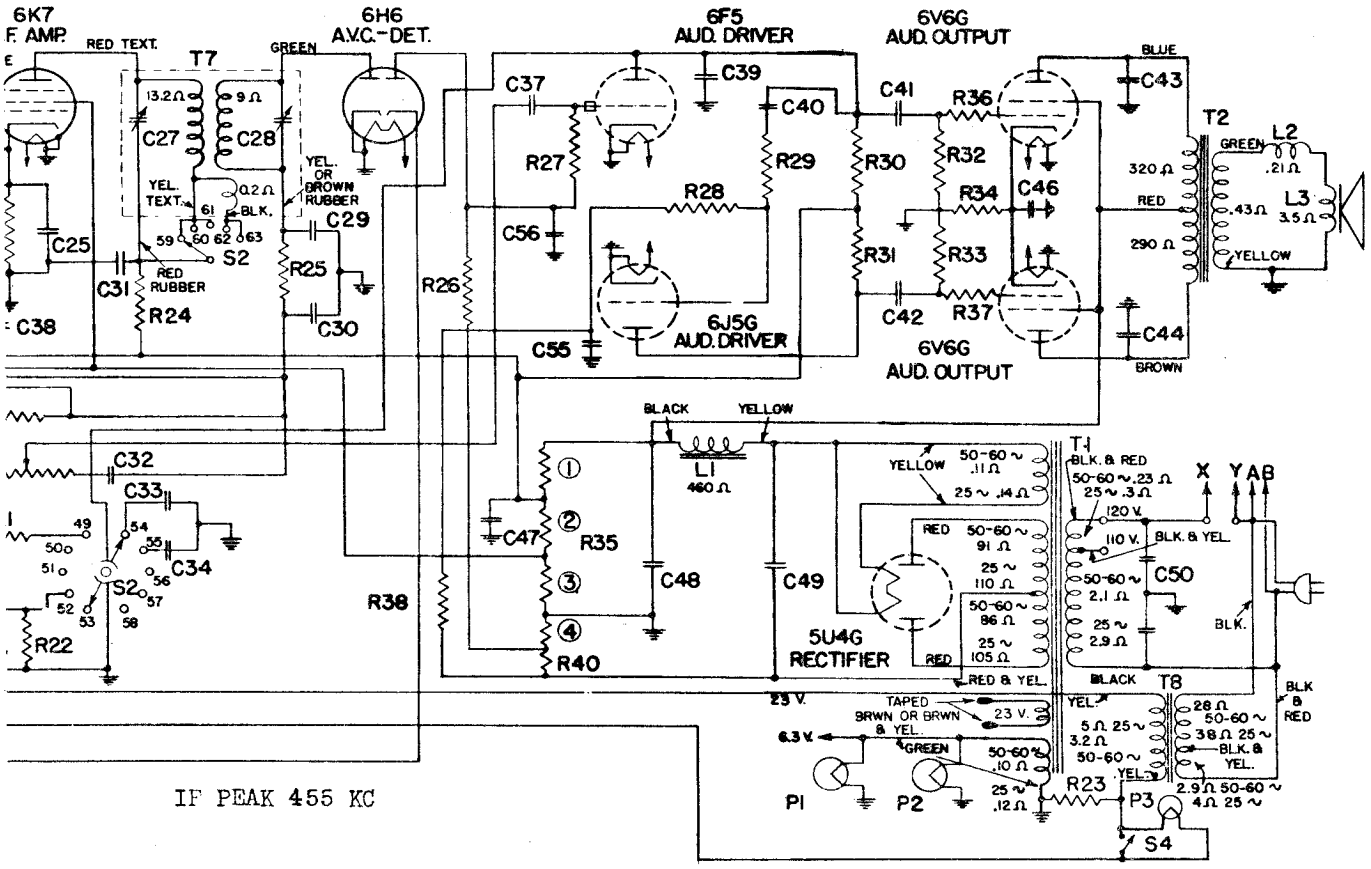

DESCRIPTION	
Carbon	1,000 Ohms
Carbon	1,000 Ohms
Carbon	470,000 Ohms
W W	20 Ohms
or Trimmer	5–40 MMF. "D"
or Trimmer	5–40 MMF. "B"
or Trimmer	2–20 MMF. "D"
or Trimmer	2–20 MMF. "C"
or Trimmer	7–23 MMF. "B"
or Mica	3200 MMF.
or Mica	2100 MMF.
or Padder	160–375 MMF. "B"
or Paper	.05 MFD.
or Tuning	10–450 MMF.
or Paper	.05 MFD.
or Paper	.05 MFD.
or Mica	18 MMF.
or Paper	.1 MFD.
or Paper	.05 MFD.
or Trimmer	2–20 MMF "D"
or Trimmer	3–30 MMF. "B"
or Paper	.05 MFD.
or Silver Plated	50 MMF.
or Mica	4700 MMF.
or Paper	.05 MFD.
or Trimmer	100–230 MMF. 1st
ri.	
or Trimmer	50–135 MMF. 1st
ec.	
or Trimmer	50–135 MMF. 1st
ert.	

SYMBOL	DESCRIPTION
C-25	Capacitor Paper .05 MFD.
C-26	Capacitor Paper .05 MFD.
C-27	Capacitor Trimmer 50–135 MMF. 2nd I.F. Pri.
C-28	Capacitor Trimmer 100–230 MMF. 2nd I.F. Sec.
C-29	Capacitor Mica 150 MMF.
C-30	Capacitor Mica 150 MMF.
C-31	Capacitor Paper .05 MFD.
C-32	Capacitor Paper .02 MFD.
C-33	Capacitor Paper .0055 MFD.
C-34	Capacitor Paper .002 MFD.
C-35	Capacitor Paper .05 MFD.
C-36	Capacitor Paper .0055 MFD.
C-37	Capacitor Paper .02 MFD.
C-38	Capacitor Paper .01 MFD.
C-39	Capacitor Mica 270 MMF.
C-40	Capacitor Paper .02 MFD.
C-41	Capacitor Paper .05 MFD.
C-42	Capacitor Paper .05 MFD.
C-43	Capacitor Paper .003 MFD.
C-44	Capacitor Paper .003 MFD.
C-45	Capacitor Compensating 175 MMF.
C-46	Capacitor Dry Electro. 25 MFD. 25 V. W.V.
C-47	Capacitor Dry Electro. 10 MFD. 400 V.W.V.
C-48	Capacitor Wet Electro. 30 MFD. 450 V.W.V.
C-49	Capacitor Wet Electro. 30 MFD. 450 V.W.V.
C-50	Capacitor Line .01–.01 MFD. 250 V. A.C.
C-51	Capacitor Dry Electro- 60 MFD. 40 V.A.C (Use Quan. 2 on 25-cycle receivers)
C-52	Capacitor Compensating 20 MMF.
C-54	Capacitor Trimmer 2–20 MMF.
C-55	Capacitor Paper .25 MFD.
C-56	Capacitor Paper .25 MFD.

SYMBOL	DESCRIPTION
C-57	Capacitor Mica 82. MMF.
T-8	23 volt Transformer 50–60 cycles—25 cycles
T-1	Power Transformer 50–60 cycles—25 cycles
T-2	Output Transformer
T-3	Ant. Transformer B.C.D.
T-4	R.F. Transformer B.C.D.
T-5	Osc. Transformer B.C.D.
T-6	1st I.F. Transformer
T-7	2nd I.F. Transformer
L-1	Field Coil 460 Ohms Cold
L-2	Hum Buck Coil
L-3	Voice Coil 3.5 Ohms
L-4	Beam-a-Scope
CT	Contactor Assembly
P-1	Pilot Lamp 6.3 V.—.25 Amp.
P-2	Pilot Lamp 6.3 V.—.25 Amp.
P-3	Tuning Lamp 25 V.—.2 Amp.
S-1	Band Change Switch
S-2	Tone Control Switch
S-3	Power Supply Switch
S-4	Tuning Lamp Switch
S-5	Station Selector Switch
S-6	Beam-a-Scope—Ant. Switch
S-7	Motor Scan Switch
M-1	Tuning Motor 23 V. 50–60 cycles—25 cycles
M-2	Pre-timer Motor—60 cycles, 50 cycles, 25 cycles

hematic Diagram

GENERAL ELECTRIC CO.

MODELS G-105,G-106
Chassis Wiring,Socket
Trimmers,Dial Mechanism
Volume Control Motor

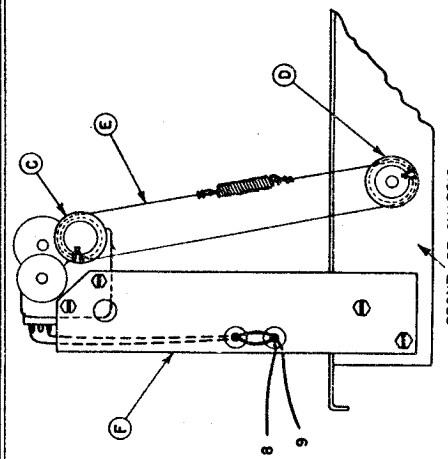

Fig. 10. Volume Control Motor Mounting

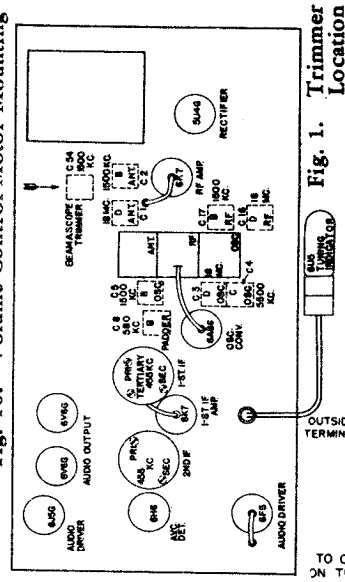

Fig. 1. Trimmer Location

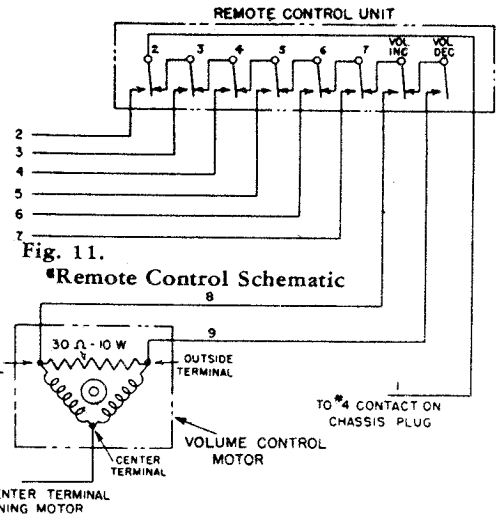

Fig. 11. Remote Control Schematic

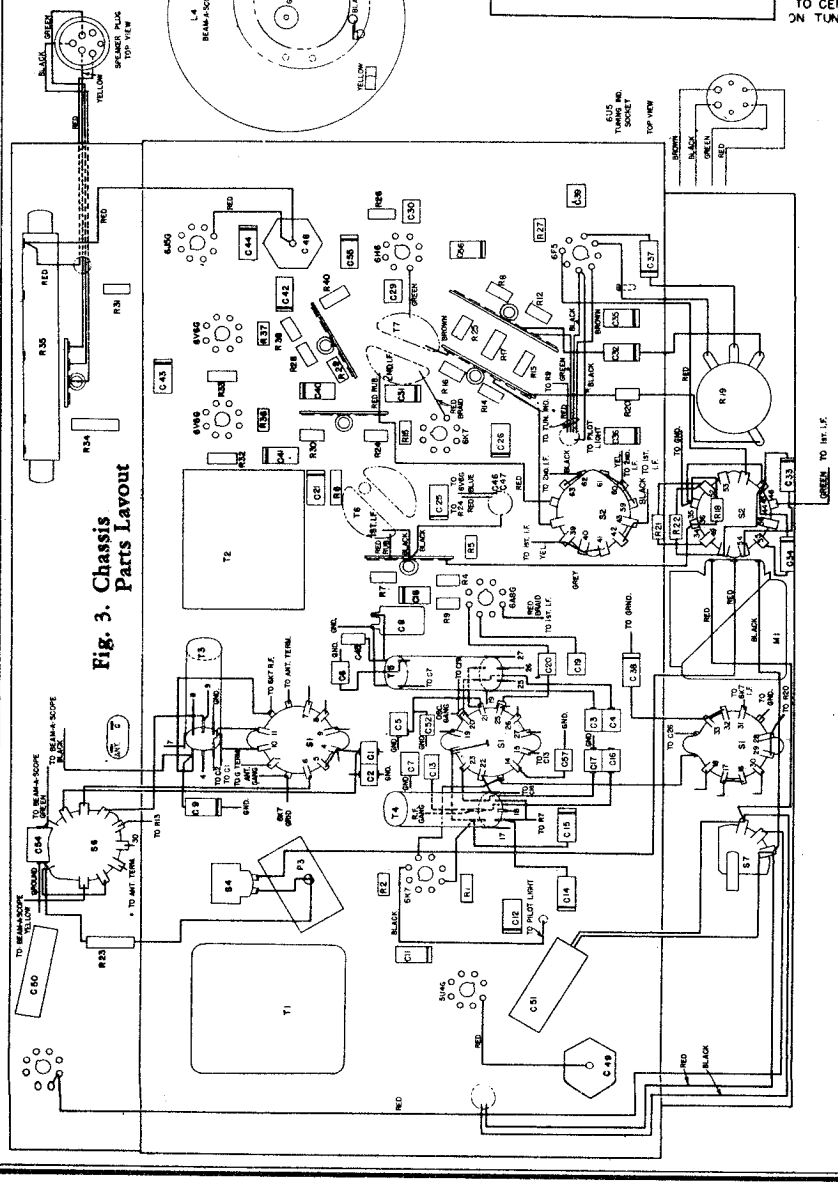

Fig. 3. Chassis Parts Layout

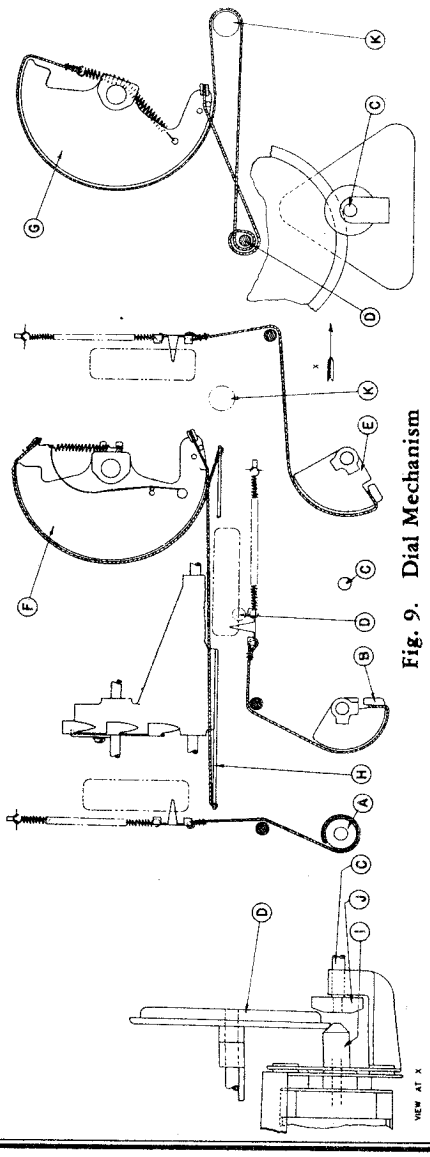

Fig. 9. Dial Mechanism

©John F. Rider, Publisher

MODELS G-105, G-106
Circuit Data
Alignment

GENERAL ELECTRIC CO.

KEYBOARD TOUCH-TUNING
THREE-BAND SUPERHETERODYNE RECEIVERS

SERVICE DATA

MODELS G-105 AND G-106

Electrical Specifications

Model G-105:
Rating "A" . . . 105–115 (115–125)* volts, 50–60 cycles, 155 watts
Rating "C" . . . 105–115 (115–125)* volts, 25–60 cycles, 160 watts

Model G-106:
Rating "A" . . . 105–115 (115–125)* volts, 60 cycles, 155 watts
Rating "B" . . . 105–115 (115–125)* volts, 50 cycles, 155 watts
Rating "C" . . . 105–115 (115–125)* volts, 25 cycles, 160 watts

* The receivers as shipped from the factory have the power cord connected to the 115–125-volt tap of the transformer (black and red lead). If the normal voltage of the power supply is always below 110 volts, the connection of the power cord should be removed from this lead and soldered to the 105–115-volt tap (black and yellow lead). After changing the connection, tape the soldered joint as well as the exposed end of the unused lead. This change requires removal of the chassis from the cabinet.

GENERAL INFORMATION

The Models G-105 and G-106 are three band A-C operated receivers employing ten General Electric Pre-tested tubes in a superheterodyne circuit as described above. These receivers are equipped with a simplified Touch Tuning system allowing motor-tuning of thirteen stations; and the new and exclusive self-contained antenna system, "Beam-a-Scope." Other features of design include; electric finger-tip dial drive control, R.F. Amplifier, five position hi-fidelity tone control, special I.F. transformers and push-pull output.

The Model G-106 not only has all the above features, but it also incorporates an ingenious automatic program preselector which permits the automatic tuning of favorite programs at 15-minute intervals throughout a 24-hour period.

BEAM-A-SCOPE

The "Beam-a-Scope" is essentially a tuned coil antenna wound on an impregnated frame and shielded by a Faraday screen against electrostatic disturbances. This construction discriminates in favor of the desired signal as against a local man-made noise source in three ways. First, since any noise source is composed of two components—electrostatic and magnetic fields—the "Beam-a-Scope" may be revolved so that a null point is found where no voltage is produced from these two components in the direction where the noise originates. Due to the fact that this null point is very sharp, it is very unusual that any desired station will be in a direct line with the rejected noise signal and thereby have its signal strength reduced appreciably. In the second place, the "Beam-a-Scope" eliminates the external return path to ground present in the case of an unshielded antenna. This reduces or eliminates local man-made noise sources in much the same way as a shielded antenna lead-in does in an ordinary antenna installation. In the third place, the "Beam-a-Scope" discriminates against the electrostatic component of an incoming wave in comparison with the magnetic component, because of the Faraday shield. Since the electrostatic component of a local noise source is a great deal larger than the magnetic component, this rejection property brings about an enormous increase in signal-to-noise ratio.

The above operation is only available on the broadcast band and in this position the Beam-a-Scope is also the first tuned grid circuit. On the "C" and "D" bands, the Beam-a-Scope is connected to operate as a capacity type antenna.

Switch (S-6) located at the rear of the chassis is the Beam-a-Scope-antenna transfer switch to allow operation on all bands with either the Beam-a-Scope or an outside antenna. This switch also reduces the sensitivity of the 6U5 tuning indicator tube in the "B" band only.

Loud-speaker

To center the voice coil, remove dust cover by softening with acetone. Loosen the two spider clamping screws and place three 1 in. by ¼ in. by 0.010 in. paper or celluloid strips equally spaced around pole piece for clearance; then tighten clamping screws. Remove centering strips and cement the dust cap back in place with Glyptal cement.

Coil System

The "B," "C" and "D" band antenna coils are wound on a single coil form T-3 as shown in Fig. 4 and 5. T-4 and T-5 are the R.F. and oscillator transformers respectively for the "B," "C" and "D" bands. All switch points are numbered in Fig. 4 and 5 to facilitate in locating these switch points on the pictorial wiring diagram, Fig. 3.

The following table gives the coils in use for the various positions of the wave change switch.

Coil	Band "B"	Band "C"	Band "D"
Antenna Primary Beam-a-Scope	.....	Lower portion of L-6	L-6
Regular Antenna	L-9	Lower portion of L-8	L-6
Wave change switch point	Gnd to (3) Ant to (9)	Gnd to (2) Ant to (8)	Gnd to (1) Ant to (7)
Antenna Secondary Beam-a-Scope	L-4 (Beam-a-Scope)	L-5 + L-7	L-5
Regular antenna	L-5+L-7+L-8	L-5+L-7	L-5
Wave change switch point	C-9 to (12) .	C-9 to (11) & (12)	C-9 to (10) and (11)
R.F. Primary	6K7 grid to (6) L-14	6K7 grid to (6) L-11	6K7 grid to (4) L-11
Wave change switch point	6K7 plate to (13) and (18)	6K7 plate to (14) and (17)	6K7 plate to (15) and (16)
R.F. Secondary	L-10+L12+L13	L-10 + L-12	L-10
Wave change switch point	C-15 to (24)	C-15 to (23) and (24)	C-15 to (22) and (23)
Oscillator Primary	L-19	L-17	L-15
Wave change switch point	Osc. grid to (21)	Osc. grid to (20) Gnd to (22)	Osc. grid to (19) Gnd to (20)
Oscillator Secondary	L-20	L-18	L-16
Wave change switch point	C-20 to (27)	C-20 to (26)	C-20 to (25)

In the "C" and "D" bands, the band switch removes bass compensation by grounding capacitor C-36, increases the I.F. sensitivity and also increases the sensitivity of the tuning indicator tube.

Note:—When replacing capacitors C-45 and C-52, it is absolutely necessary to replace with capacitors of this same rating as these are special temperature coefficient capacitors that compensate for oscillator drift with temperature.

ALIGNMENT PROCEDURE

Alignment Procedure

Use a "dummy" antenna in making all alignments. The grid lead should not be removed from the tube to which the input signal is applied when aligning the I.F. amplifier.

I.F. Alignment with Oscilloscope *

Band Switch Setting	Input Frequency	Tone Control Position	Point of Input	Trimmer	Comments
1. Band B	455 K.C. and 30 K.C. Sweep	Normal	I.F. 6K7 Grid	2nd I.F. Sec. 2nd I.F. Pri.	Condenser gang at minimum capacity—vertical input to ground and junction at R-25, R-12, and R-17. Adjust trimmers in order mentioned for a single curve of maximum amplitude. The resulting curve on the "normal" position is shown in Fig. 2A. The expanded curve taken with tone control at "Treble I" is shown in Fig. 2B.
2. Band B	455 K.C. and 30 K.C. Sweep	Treble I	Converter 6A8 Grid	1st I.F. Sec. 1st I.F. Pri.	
3. Band B	455 K.C. and 30 K.C. Sweep	Normal	Converter 6A8 Grid	1st I.F. Tertiary	
4. Band B	455 K.C. and 30 K.C. Sweep	Normal	Converter 6A8 Grid	All I.F. Trimmers	

I.F. Alignment with Output Meter *

Band Switch Setting	Input Frequency	Tone Control Position	Point of Input	Trimmer	Comments
1. Band B	455 K.C. modulated	Normal	I.F. 6K7 Grid	2nd I.F. Sec. 2nd I.F. Pri.	Condenser gang at minimum capacity-output meter connected across voice coil-volume control at maximum-input as low as practical. Adjust all trimmers in order listed for maximum output. Note:—Do not attempt alignment in the expanded position.
2. Band B	455 K.C. modulated	Normal	Converter 6A8 Grid	1st I.F. Sec. 1st I.F. Pri. 1st I.F. Tertiary	
3. Band B	455 K.C. modulated	Normal	Converter 6A8 Grid	All I.F. Trimmers	

R.F. Alignment **

Band Switch Setting	Input Frequency	Tone Control Position	Point of Input	Trimmer	Comments
1. Band B					Mechanically adjust dial pointer to first line at left-hand end of dial scale with condenser gang fully meshed.
2. Band B	1500 K.C. modulated	Bass	Antenna Post	Osc. (C-5) R.F. (C-17) Ant. (C-2)	Connect output meter across voice coil-antenna switch turned to counter-clockwise position. Adjust trimmers in order listed for maximum output.
3. Band B	580 K.C. modulated	Bass	Antenna Post	Osc. Padder (C-8)	Adjust padder for maximum output in vicinity of 580 K.C. while rocking gang condenser.
4. Band B	1500 K.C. modulated				
5. Band C	5500 K.C. modulated	Bass	Antenna Post	Osc. (C-4)	Adjust trimmer for greatest output with dial pointer at 5500 K.C.
6. Band D	18.0 M.C. modulated	Bass	Antenna Post	Osc. (C-3) R.F. (C-16) Ant. (C-1)	Peak C16 and C1 while rocking gang condenser. The image of any signal on the D band should be 910 K.C. below input signal. Example: 15 M.C. image 14.09 M.C.
7. Band B	1500 K.C. modulated	Bass	Antenna Post	Beam-a-scope (C-54)	Turn antenna switch to clockwise position, align Beam-a-scope trimmer for maximum output.

* Use "dummy" antenna consisting of .05 mfd. capacitor between signal generator and point of input.
** Use "dummy" antenna consisting of 250 mmf. capacitor in series with 200-ohm resistance between the signal generator and the point of input.

©John F. Rider, Publisher

©John F. Rider, Publisher

MODELS G-105 AND G-106

Insist on genuine factory-tested parts, which may be purchased from authorized dealers.

Stock No.	Description	List Price
	CHASSIS ASSEMBLY	
*RB-008	BOARD—Terminal Board (2 lugs) (25-cycle set)	$0.10
*RB-023	BOARD—Terminal Board (4 lugs)	.10
*RB-049	BOARD—Antenna-ground terminal board	.10
*RB-062	BOARD—Terminal board (6 terminals)	.10
*RB-066	BOARD—Terminal board (4 lugs)	.10
*RB-070	BOARD—Terminal board (3 lugs)	.10
RB-094	BOARD—Terminal board (7 lugs)	.10
RB-163	BRACKET—Tuning motor transformer bracket (G-106 only)	.80
*RC-011	CAPACITOR—.002 mfd., 600 V. paper (C-34)	.25
RC-020	CAPACITOR—.003 mfd., 1500 V. paper (C-43, -44)	.25
*RC-023	CAPACITOR—.005 mfd., 600 V. paper (C-33, -36)	.25
*RC-039	CAPACITOR—.01 mfd., 600 V. paper (C-38)	.25
*RC-048	CAPACITOR—.02 mfd., 600 V. paper (C-32, -37, -40)	.30
*RC-092	CAPACITOR—.05 mfd., 600 V. paper (C-9, 11, -12, -15, -18, -21, -25, -23, -31, -35, -41, -42)	.30
*RC-104	CAPACITOR—.1 mfd., 600 V. paper (C-14)	.30
*RC-136	CAPACITOR—.25 mfd., 200 V. paper (C-55, -56)	.30
RC-217	CAPACITOR—50 mmf., mica (silver plated) (C-19)	.35
RC-219	CAPACITOR—18 mmf., mica (C-13)	.25
RC-227	CAPACITOR—82 mmf., mica (C-57)	.25
RC-230	CAPACITOR—20 mmf., compensating capacitor (C-52)	.35
*RC-242	CAPACITOR—150 mmf., mica (C-29, -30)	.25
RC-245	CAPACITOR—175 mmf., compensating capacitor (C-45)	.45
RC-263	CAPACITOR—270 mmf., mica (C-39)	.25
*RC-349	CAPACITOR—2100 mmf., mica (C-7)	.30
*RC-353	CAPACITOR—3200 mmf., mica (C-6)	.70
RC-393	CAPACITOR—4700 mmf., mica (silvered) (C-20)	.50
*RC-429	CAPACITOR—30 mfd., 450 V. wet electrolytic (C-48, -49)	1.35
RC-596	CAPACITOR—25 mfd., 25 V.; 10 mfd., 400 V.; dry electrolytic (C-46, -47)	1.10
RC-597	CAPACITOR—60 mfd., 40 V. A-C motor capacitor (C-51)	1.00
RC-678	CAPACITOR—160-375 mmf., "B" padder (C-8)	.30
RC-679	CAPACITOR—2-20 mmf., trimmer (C-54)	.20
RC-680	CAPACITOR—2-20 mmf., 3-30 mmf., double trimmers (C-16, -17)	.35
RC-681	CAPACITOR—7-23 mmf., "B" osc. trimmer (C-5)	.90
RC-682	CAPACITOR—2-20 mmf., double trimmers (osc.) (C-3, -4)	.35
RC-683	CAPACITOR—5-40 mmf., double trimmers (ant.) (C-1, -2)	.35
RC-729	CONDENSER—3 gang tuning condenser (C-10)	5.60
*RC-863	POWER CORD—Power cord	.65
RC-1977	CLAMP—Tuning indicator clamp and thumb screw	.10
RC-8035	Cable—Speaker cable and plug	.50
RC-8040	CABLE—Tuning indicator cable and socket	.45
RC-892	CABLE—Clock connector cord and plug	.50
RG-016	GRID CLIP—Control grid clip (for metal tubes) (Pkg. of 5)	.10
RK-027	KNOB—Tone and band change knobs (Pkg. of 5)	.50
RK-028	KNOB—Control knobs (plain) (Pkg. of 5)	.30
RL-063	COIL—Ant. coil band "B," "C," and "D" (T-3)	1.25
RL-142	COIL—R.F. coil band "B," "C," and "D" (T-4)	1.15
RL-267	COIL—Osc. coil band "B," "C," and "D"	$1.25
RL-500	BEAM-A-SCOPE—Beam-a-scope antenna complete	9.15
*RQ-1247	RESISTOR—330 ohm, ½-W. carbon (R-2, -4, -15, -18) (Pkg. of 5)	.70
*RQ-1259	RESISTOR—1000 ohm, ½-W. carbon (R-7, -24, -36, -37) (Pkg. of 5)	.70
*RQ-1291	RESISTOR—22,000 ohm, ½-W. carbon (R-9) (Pkg. of 5)	.70
*RQ-1299	RESISTOR—47,000 ohm, ½-W. carbon (R-5, -25) (Pkg. of 5)	.70
*RQ-1301	RESISTOR—56,000 ohm, ½-W. carbon (R-16) (Pkg. of 5)	.70
*RQ-1303	RESISTOR—68,000 ohm, ½-W. carbon (R-20, -30, -31) (Pkg. of 5)	.70
RQ-1305	RESISTOR—82,000 ohm, ½-W. carbon (R-28) (Pkg. of 5)	.70
*RQ-1315	RESISTOR—220,000 ohm, ½-W. carbon (R-1, -17, -32, -33) (Pkg. of 5)	.70
*RQ-1323	RESISTOR—470,000 ohm, ½-W. carbon (R-26, -38) (Pkg. of 5)	.70
*RQ-1331	RESISTOR—1.0 megohm, ½-W. carbon (R-11) (Pkg. of 5)	.70
*RQ-1333	RESISTOR—1.2 megohm, ½-W. carbon (R-22, -29) (Pkg. of 5)	.70
*RQ-1335	RESISTOR—1.5 megohm, ½-W. carbon (R-27) (Pkg. of 5)	.70
*RQ-1337	RESISTOR—1.8 megohm, ½-W. carbon (R-8) (Pkg. of 5)	.70
*RQ-1339	RESISTOR—2.2 megohm, ½-W. carbon (R-12, -14) (Pkg. of 5)	.70
RQ-1341	RESISTOR—2.7 megohm, ½-W. carbon (R-13) (Pkg. of 5)	.70
RQ-1459	RESISTOR—1000 ohm, 1-W. carbon (R-23)	.20
RQ-1497	RESISTOR—39,000 ohm, 1-W. carbon (R-6)	.20
RR-740	RESISTOR—Voltage divider resistor (R-35)	.85
RR-1006	RESISTOR—20 ohm, ½-W. carbon W.W. resistor (R-40) (Pkg. of 5)	.70
RR-1007	RESISTOR—230 ohm, 2-W. carbon resistor (R-34)	.20
*RS-174	SHIELD—Grid shield cap (Pkg. of 5)	.25
*RS-200	SOCKET—8 prong octal base socket (Pkg. of 5)	.75
*RS-204	SOCKET—5 prong octal tube socket (Pkg. of 5)	.75
RS-225	SOCKET—Dial light bayonet socket assembly	.10
RS-226	SOCKET—Octal base (on rear deck of chassis)	.15
RS-227	SOCKET—Tube socket (low loss octal base)	.15
RS-228	SOCKET—Station set-up lamp socket	.20
RS-229	SOCKET—Tube socket (6A8G)	.35
RS-508	SPACER—Tuning motor transformer spacer (Pkg. of 4)	.25
RS-396	SWITCH—Tone control switch (S-2)	1.35
RS-397	SWITCH—Station set-up lamp switch (S-4)	.20
RS-398	SWITCH—Motor scan switch (S-7)	.75
RS-399	SWITCH—Antenna loop switch (S-6)	.85
RS-3007	SWITCH—Band change switch (S-1)	3.00
RS-3001	SWITCH—Tuning motor "Off" switch	1.00
RT-104	TRANSFORMER—Power transformer, 105-125 V., 25-60 cycles (T-1)	14.75
RT-105	TRANSFORMER—Power transformer, 105-125 V., 50-60 cycles (T-1)	9.00
RT-106	TRANSFORMER—Tuning motor transformer, 50-60 cycles	3.70
RT-107	TRANSFORMER—Tuning motor transformer, 25 cycles	11.10
RT-263	TRANSFORMER—1st I.F. transformer and shield (T-6)	2.30
RT-264	TRANSFORMER—2nd I.F. transformer and shield (T-7)	1.60
RT-439	TRANSFORMER—Output transformer (T-2)	3.20
RV-042	VOLUME CONTROL—2 megohm volume control (R-19)	$0.75
*RW-101	WASHERS—Felt washers for knobs (Pkg. of 10)	.45
*RX-027	ASSEMBLY—Chassis mounting assembly	.15
RX-049	ASSEMBLY—Condenser mounting assembly	.15
	DIAL SCALE AND AUTOMATIC DRIVE ASSEMBLY	
RB-160	BRACKET—Reduction drive wheel bracket	.20
RB-161	BRACKET—Manual and motor drive bracket	.40
RB-162	BRACKET—Tuning condenser mounting bracket (front)	.45
RB-700	BRAKE—Drive wheel friction brake (complete)	.20
RC-8041	CABLE—Dial pointer drive cable (2 cords)	.15
RC-8042	CABLE—Tone or volume control indicator cable (Pkg. of 5)	.40
RC-8043	CABLE—Band indicator cable (Pkg. of 5)	.35
RC-8044	CABLE—Condenser drive cable (Pkg. of 5)	.65
RD-073	DIAL—Dial scale	2.25
RE-031	ESCUTCHEON—Dial scale escutcheon	1.75
RM-112	MOTOR—Tuning motor, 50-60 cycles	4.00
RM-113	MOTOR—Tuning motor, 25 cycles	5.35
*RP-048	DRIVE PULLEY—Condenser drive pulley (G)	.35
*RP-079	PULLEY—Volume control drive pulley assembly (A)	.15
*RP-083	PULLEY—Band change drive cord pulley (E)	.10
*RP-084	PULLEY—Tone control drive pulley (B)	.10
RP-110	POINTER—Band change, tone and volume indicator pointer (Pkg. of 5)	.20
RP-111	POINTER—Dial scale pointer and clamp	.15
RP-300	PULLEY—Rubber cone drive pulley (motor) (1)	.25
RP-301	PULLEY—Drive cord idler pulley (Pkg. of 2)	.10
RP-302	DRIVE PULLEY—Pointer and drive pulley (F)	.35
*RS-427	SPRING—Volume, tone and band indicator tension springs (Pkg. of 5)	.20
RS-446	SPRING—Drive cord tension spring (Pkg. of 5)	.25
RS-911	SHAFT—Drive wheel shaft and collar	.15
RS-912	SHAFT—Manual drive shaft and rubber cone pulley	.20
RW-022	WINDOW—Volume control window	.30
RW-023	WINDOW—Tone control window	.30
RW-024	WINDOW—Band change window	.30
RW-900	WHEEL—Idler drive wheel (D)	45
	AUTOMATIC PROGRAM PRESELECTOR—G-106 ONLY	
RC-8079	CARDS—Station letter cards (set)	.35
RC-8080	CARDS—Neutral (card) (Strip of 5)	.05
RE-041	ESCUTCHEON—Clock face escutcheon and window	.65
RW-028	WINDOW—Celluloid station windows (Pkg. of 10)	.05
	PUSH-BUTTON MECHANISM	
RC-8045	CARDS—Station letter cards (set)	$0.60
RC-8046	CABLE—Power cable and plug to push-button assembly	.50
RC-8047	CABLE—Station selector button cable	.95
RK-203	KEY—Station key (Pkg. of 5)	.30
RS-444	SPRING—Station button springs (Pkg. of 10)	.10
RS-864	SCREWS—Keyboard assembly thumb screws (Pkg. of 10)	.40
RS-3008	SWITCH—Push button "On-Off" switch	.50
RT-906	TAB—"Off" tab for station button (Strip of 10)	.05
RW-025	WINDOW—Celluloid station window (Pkg. of 25)	.15
RX-051	ASSEMBLY—Keyboard touch-tuning assembly switch complete (G-105)	7.40
RX-052	ASSEMBLY—Keyboard touch-tuning assembly switch (complete) (G-106)	7.45
	STATION SELECTOR ASSEMBLY (BEHIND TUNING CONDENSER)	
RB-701	BAND—Contactor band	.10
RC-1978	CONTACT—Thumb screw contact (complete) (Pkg. of 5)	.45
RC-1979	CONTACT—Stationary contact complete (For "Off" switch) (G-106 only)	.15
RI-108	INSULATOR—Contactor band insulator (Pkg. of 5)	.15
RS-447	SPRING—Contactor band tension spring (Pkg. of 5)	.15
RW-901	WHEEL—Contactor wheel (CT) complete	2.00
	SPEAKER ASSEMBLY	
RC-936	CONE—12-inch cone and voice coil assembly	1.10
RC-991	CLAMP—Cone spider clamp	.05
RD-301	DUST CAP—Speaker cone dust cap (Pkg. of 5)	.10
RP-109	PLUG—Male speaker plug	.20
RS-075	SPEAKER—12-inch speaker	5.50
*RX-030	ASSEMBLY—Speaker mounting assembly	.10

(Prices subject to change without notice.)

***Used on previous receivers.**

SOCKET VOLTAGES

Tube No.	Plate to Ground Volts D-C	Screen Grid to Ground Volts D-C	Cathode to Ground Volts D-C	Cathode Current MA	Heater Volts A-C
6K7 R.F.	215	95	2.6	7.5	6.4
6A8 Conv.	215	85	2.7	9.0	6.4
6A8 Osc.	135	...			
6K7 I.F.	215	95	2.6	7.5	6.4
6H6 Det.	...	...	...	...	6.4
6F5 Audio	150*	...	0	1.0	6.4
6J5G Inverter	85*	...	0	2.0	6.4
6V6G Output	280	290	17.5	40 each	6.4
6U5 Indicator	220	...	...	0.5	6.4
5U4G Rectifier	Plate to Plate 680 RMS		350	120	5.1

6F5 Bias Supply Voltage—1.2 Volts
6J5G Bias Supply Voltage—3.5 Volts

AC Line voltage—120 No signal input—1000 ohms per volt meter—dial pointer at 530 K.C. on broadcast band.
* Measured on 500-volt scale.

MODEL F-107
Parts

GENERAL ELECTRIC CO.

REPLACEMENT PARTS LIST
Model F-107

Insist on genuine factory-tested parts which may be purchased from authorized dealers.

Stock No.	Description	List Price
	CHASSIS ASSEMBLY	
*RB-008	BOARD—2 lug terminal board	$0.10
*RB-023	BOARD—4 lug terminal board (near 6J5 socket)	.10
*RB-049	BOARD—Ant. and ground terminal board	.10
*RB-053	BOARD—3 lug terminal board (near 1st and 2nd I.F.)	.10
RB-063	BOARD—Fuse terminal board and bracket	.25
RB-062	BOARD—6 lug terminal board (near 6H6 socket)	.10
RC-002	CAPACITOR—.00075 mfd., 200 V. paper (C-41)	.25
RC-005	CAPACITOR—.001 mfd., 400 V. paper (C-55)	.25
*RC-023	CAPACITOR—.005 mfd., 600 V. paper (C-48)	.25
*RC-042	CAPACITOR—.01 mfd., 1,000 V. paper (C-54)	.30
*RC-091	CAPACITOR—.05 mfd., 400 V. paper (C-34, C-39, C-40, C-43, C-44, C-46, C-50, C-53)	.30
RC-092	CAPACITOR—.05 mfd., 600 V. paper (C-36)	.35
*RC-123	CAPACITOR—.1 mfd., 400 V. paper (C-35, C-38, C-42, C-45, C-47, C-49)	.35
*RC-150	CAPACITOR—.25 mfd., 400 V. paper (C-37)	.35
*RC-205	CAPACITOR—20 mmf., mica (C-26)	.35
RC-206	CAPACITOR—50 mmf., mica (C-21) (special for osc.)	.35
*RC-242	CAPACITOR—150 mmf., mica (C-28, C-29, C-31)	.25
*RC-259	CAPACITOR—250 mmf., mica (C-25)	.30
RC-308	CAPACITOR—750 mmf., mica (C-30)	.35
*RC-357	CAPACITOR—3,600 mmf., mica (C-23)	.50
RC-364	CAPACITOR—1,300 mmf., mica (C-24)	.35
RC-427	CAPACITOR—16 mfd., 450 V. wet electrolytic (C-60)	1.05
RC-428	CAPACITOR—30 mfd., 450 V. wet electrolytic (C-61)	1.20
RC-579	CAPACITOR—Dry electrolytic, 10 mfd., 12 V. A.C.; 4 mfd., 400 V.; 10 mfd., 400 V.; 25 mfd., 25 V. (C-59, C-62, C-63, C-64)	1.70
RC-582	CAPACITOR—1,000 mfd., 12 V. A.C. dry electrolytic (C-58) for 50-60 cycle sets	$2.45
RC-588	CAPACITOR—2300 mfd., 12 V. A.C. dry electrolytic for 25-cycle sets (C-57)	4.50
RC-650	CAPACITOR—Double trimmers (5-40 mmf.) (C-1, C-2) "B" and "D" band antenna	.25
RC-651	CAPACITOR—Double trimmers (2-20 mmf.) (C-7, C-8) "B" and "D" band R.F.	.25
RC-652	CAPACITOR—"B" band padder (175-350 mmf.) (C-6)	.25
RC-654	CAPACITOR—Double trimmers, pri. and sec., 1st or 2nd I.F. transformer (C-12, C-13, C-14, C-15)	.45
RC-655	CAPACITOR—Double trimmers, pri. and sec., 3rd I.F. transformer (C-16, C-17)	1.55
RC-661	CAPACITOR—"B", "C" and "D" band oscillator trimmer (C-3, C-4, C-5)	.60
RC-719	CONDENSER—3-gang tuning condenser (C-20)	5.15
*RC-755	CAPACITOR—Line capacitor .01-.01 mfd., 250 V. A.C. (C-56)	.40
*RC-863	CORD—Power cord with plug	.65
*RC-992	CUSHION—Condenser mounting cushion assembly (Pkg. of 3)	.10
RC-8011	CABLE—Speaker cable with female plug	.60
*RF-301	FUSE—3 amp. fuse (Pkg. of 10)	1.00
*RG-001	GRID CAP—Control grid cap (Pkg. of 5)	.10
RK-017	KNOB—Volume and tone control knobs (Pkg. of 5)	.40
RK-018	KNOB—Band and A.F.C. switch knobs (Pkg. of 5)	.40
RK-021	KNOB—Manual tuning knob (Pkg. of 5)	.50
RL-046	COIL—Antenna coil "A", "B", and "C" bands (T-6)	1.35
RL-134	COIL—R.F. coil "A", "B", and "C" bands (T-4)	1.25
RL-249	COIL—Osc. coil, "A", "B" and "C" bands (T-3)	1.50
RP-078	PLATE—Fuse cover plate	.10
RQ-1247	RESISTOR—330 ohm, ½ watt carbon (R-3, R-13) (Pkg. of 5)	.70
RQ-1257	RESISTOR—820 ohm, ½ watt carbon (R-4) (Pkg. of 5)	.70
RQ-1259	RESISTOR—1,000 ohm, ½ watt carbon (R-15, R-29) (Pkg. of 5)	$0.70
RQ-1267	RESISTOR—2,200 ohm, ½ watt carbon (R-12, R-23) (Pkg. of 5)	.70
RQ-1275	RESISTOR—4,700 ohm, ½ watt carbon (R-5, R-28) (Pkg. of 5)	.70
RQ-1287	RESISTOR—15,000 ohm, ½ watt carbon (R-32) (Pkg. of 5)	.70
RQ-1291	RESISTOR—22,000 ohm, ½ watt carbon (R-31) (Pkg. of 5)	.70
RQ-1299	RESISTOR—47,000 ohm, ½ watt carbon (R-2, R-6, R-7, R-11, R-24, R-26) (Pkg. of 5)	.70
RQ-1303	RESISTOR—68,000 ohm, ½ watt carbon (R-14) (Pkg. of 5)	.70
RQ-1307	RESISTOR—100,000 ohm, ½ watt carbon (R-17, R-18, R-25, R-27) (Pkg. of 5)	.70
RQ-1313	RESISTOR—180,000 ohm, ½ watt carbon (R-19) (Pkg. of 5)	.70
RQ-1315	RESISTOR—220,000 ohm, ½ watt carbon (R-22) (Pkg. of 5)	.70
RQ-1323	RESISTOR—470,000 ohm, ½ watt carbon (R-1, R-10) (Pkg. of 5)	.70
RQ-1324	RESISTOR—510,000 ohm, ½ watt carbon (R-21) (Pkg. of 5)	.70
RQ-1339	RESISTOR—2.2 megohm, ½ watt carbon (R-16, R-20) (Pkg. of 5)	.70
RQ-1481	RESISTOR—8,200 ohm, 1 watt carbon (R-9)	.20
*RQ-1499	RESISTOR—47,000 ohm, 1 watt carbon (R-8)	.20
RR-730	RESISTOR—Tapped bleeder resistor (R-35)	.70
RR-1004	RESISTOR—230 ohm, 1½ watt moulded (R-30)	.15
*RS-139	SHIELD—3rd I.F. transformer shield	.20
RS-175	SHIELD—1st or 2nd I.F. transformer shield	.25
*RS-200	SOCKET—8-pin tube socket (Pkg. of 5)	.75
RS-217	SOCKET—4-prong tube socket (Pkg. of 5)	.50
RS-221	SOCKET—8-pin socket (push button control cable receptacle) (Pkg. of 5)	.60
RS-223	SOCKET—8-pin socket for osc. and converter (Pkg. of 5)	.80
RS-356	SWITCH—Manual A.F.C. switch (S-5)	.40
RS-357	SWITCH—Tone control switch (S-4)	.70
RS-358	SWITCH—Band change switch (S-7)	2.50
RT-101	TRANSFORMER—Power trans., 110-130 V., 50-60 cycles (T-1)	5.90
RT-102	TRANSFORMER—Power Transformer, 100-130 V., 25-60 cycles (T-3)	10.00
RT-103	TRANSFORMER—Power transformer, 110-250 V., universal (T-1)	10.50
RT-246	TRANSFORMER—1st or 2nd I.F. transformer (complete) (T-4, T-5)	1.80
RT-247	TRANSFORMER—3rd I.F. transformer (complete) (T-6)	3.95
RV-033	VOLUME CONTROL—2 megohm volume control, tap at 5,000 ohms and 500,000 ohms (R-34)	1.05
*RW-101	WASHER—Felt washer for knobs (Pkg. of 10)	.45
RX-027	ASSEMBLY—Chassis mounting assembly	.15
	DIAL SCALE ASSEMBLY	
RC-868	CORD—Band indicator, tone control and volume control pointer cord (Pkg. of 5)	.60
RC-8012	CABLE—Tuning drive cables (Pkg. of 5 pairs)	.55
RD-054	DRUM—Condenser drive drum	.30
RD-056	DIAL—Dial scale assembly	3.50
RE-017	ESCUTCHEON—Dial escutcheon (complete)	1.95
RL-920	LAMP—Dial lamp 6.3 volt, .25 amp. (Pkg. of 10)	1.50
RP-079	PULLEY—Volume control cord drive pulley	.15
RP-080	POINTER—Volume or tone control pointer (Pkg. of 5)	$0.15
RP-081	POINTER—Band change indicator (Pkg. of 5)	.20
RP-082	POINTER—Dial scale pointer (includes support) (Pkg. of 5)	.55
RP-083	PULLEY—Band switch cord drive pulley	.10
RP-084	PULLEY—Tone control cord drive pulley	.10
RP-911	REFLECTOR—Lamp reflector	.75
RS-222	SOCKET—Lamp socket assembly	.45
*RS-401	SPRING—Tuning drive cord tension spring (Pkg. of 2)	.20
RS-427	SPRING—Volume, tone or band indicator cord tension spring (Pkg. of 5)	.20
RW-016	WINDOW—Escutcheon window and cushion	.30
	AUTOMATIC DRIVE AND MOTOR ASSEMBLY	
RA-404	ARM—Motor reversing switch arm (on gang condenser shaft)	.15
RB-156	BRACKET—Guide and spiral rod bracket; includes bearing (motor end)	.10
RB-157	BRACKET—Spiral rod bracket with bearing (Manual tuning end)	.10
RB-605	BELT—Motor belt	.25
RG-010	GEAR—Manual drive beveled idler gear and tuning shaft gear	.40
RG-011	GEAR—Manual drive leather faced bevel gear on spiral rod	.20
RM-104	Motor—25-cycle automatic tuning motor (motor only)	4.45
RM-105	MOTOR—50-60 cycle automatic tuning motor (motor only)	4.05
RP-085	PULLEY—Spiral rod pulley (belt driven)	.15
RR-912	RIDER—Spiral rod rider nut	.30
RR-913	ROD—Pointer slider guide rod	.15
RR-914	SPIRAL ROD—Tuning pointer spiral drive rod	.25
RR-915	RELAY—60-cycle relay (complete)	2.80
RR-917	RELAY—25-cycle relay (complete)	3.10
RS-359	SWITCH—Tuning motor reversing switch (operated by gang condenser shaft)	.70
RS-429	SPRING—Motor relay armature spring (Pkg. of 2)	.20
RS-505	SLIDER—Dial pointer slider assembly	.70
RS-908	SHAFT—Manual tuning shaft	.05
RS-028	ASSEMBLY—Motor clutch assembly (complete)	.30
RX-029	ASSEMBLY—Drive motor mounting assembly	.15
	STATION SELECTOR ASSEMBLY Behind Tuning Condenser	
RC-1962	COLLAR—Contactor shaft collar	.10
RC-1963	SLIDING CONTACTOR—Bakelite mounted rotating contactor and holder	.40
RC-1964	CONTACT—Thumbscrew contact (complete) (Pkg. of 10)	.95
RI-103	INSULATORS—Insulators and washers (Thumbscrew contact) (Pkg. of 10)	.05
RP-087	PLATE—Contact mounting segment	.55
RU-002	COUPLING UNIT—Flexible coupling with contactor arm	.75
RW-106	WICK—Wick assembly (Pkg. of 5)	.50
	PUSH BUTTON AUTOMATIC TUNING MECHANISM	
RB-064	TERMINAL BOARDS—Terminal strips (7 terminals) (pair)	.40
RB-065	TERMINAL BOARD—Terminal strip (6 terminals) (long)	.20
RB-068	TERMINAL BOARD—Terminal strip (6 terminals) (short)	.20
RB-606	LATCH BAR—Push button mechanism latch bar	$0.10
RB-607	BUTTON—Moulded push button (Pkg. of 5)	.20
RC-1965	CLAMP—Push button cable clamp (Pkg. of 10)	.10
RC-1966	CONTACTOR CLIP—Clip and insulator (on leads from terminal strip) (Pkg. of 5)	.15
RC-8013	CABLE—"On", "Off", "Scan" switch cable with plug	.65
RE-018	ESCUTCHEON—Touch tuning button escutcheon plate	1.50
RI-104	INSULATOR—Insulator between key and switch blade (Manual and off switches) (Pkg. of 5)	.15
RI-107	INSULATOR—Escutcheon separating insulator (Pkg. of 10)	.05
RI-105	Insulator between key and switch blade (Scan switch) (Pkg. of 10)	.10
RK-200	KEY—Push button key (Pkg. of 5)	.15
*RP-026	PLUG—A-c line connector female plug	.45
*RP-027	PLUG—A-c line connector male plug	.45
RS-361	SWITCH—Tuning control switch (3 section)	1.10
RS-430	SPRING—Latch bar spring (Pkg. of 5)	.10
RS-431	SPRING—Key spring and staple (Pkg. of 5)	.05
RS-506	SPACER—Contact point spacer (fiber) (Pkg. of 10)	.05
RW-017	WINDOW—Push button celluloid window (Pkg. of 25)	.10
RW-105	WASHER—Fiber washer on push button key (Pkg. of 10)	.05
RX-031	ASSEMBLY—Push button assembly (complete)	9.50
	SPEAKER ASSEMBLY	
RC-925	CONE—Cone and voice coil	$1.25
*RC-991	CLAMP—Cone spider clamp and screw	.05
*RP-015	PLUG—Male speaker plug	.20
RS-060	SPEAKER—12 in. speaker (complete)	7.50
*RS-416	SPRING—Voice coil leads spring (Pkg. of 2)	.10
RT-430	TRANSFORMER—Output transformer (T-2)	1.70
RX-030	ASSEMBLY—Speaker mounting bushings and nuts	.10
	REMOTE CONTROL UNIT	
RA-551	ADAPTER—Adapter socket	.75
RB-075	BOARD—Terminal board (9 terminals) (top)	.25
RB-076	BOARD—Terminal board (9 terminals) (bottom)	.25
RB-607	BUTTON—Moulded push button	.05
RB-608	LATCH BAR—Latch bar for keys	.10
RC-1970	CLAMP—Remote cable clamp	.05
RC-8023	CABLE—Flat cable (10 leads)	6.90
RK-201	KEY—Push button key	.10
RK-202	KEY—Push button key (silent)	.10
RS-430	SPRING—Latch bar spring (Pkg. of 5)	.10
RS-431	SPRING—Key spring and spacer (Pkg. of 5)	.10
RT-950	TERMINAL—Terminal for No. 10 lead (Pkg. of 5)	.05
RT-951	TERMINAL—Terminal on leads No. 1 to No. 9 and rubber insulator (Pkg. of 5)	.05
RW-017	WINDOW—Push button celluloid window (Pkg. of 25)	.05

*Used on previous receivers.

(Prices subject to change without notice)

©John F. Rider, Publisher

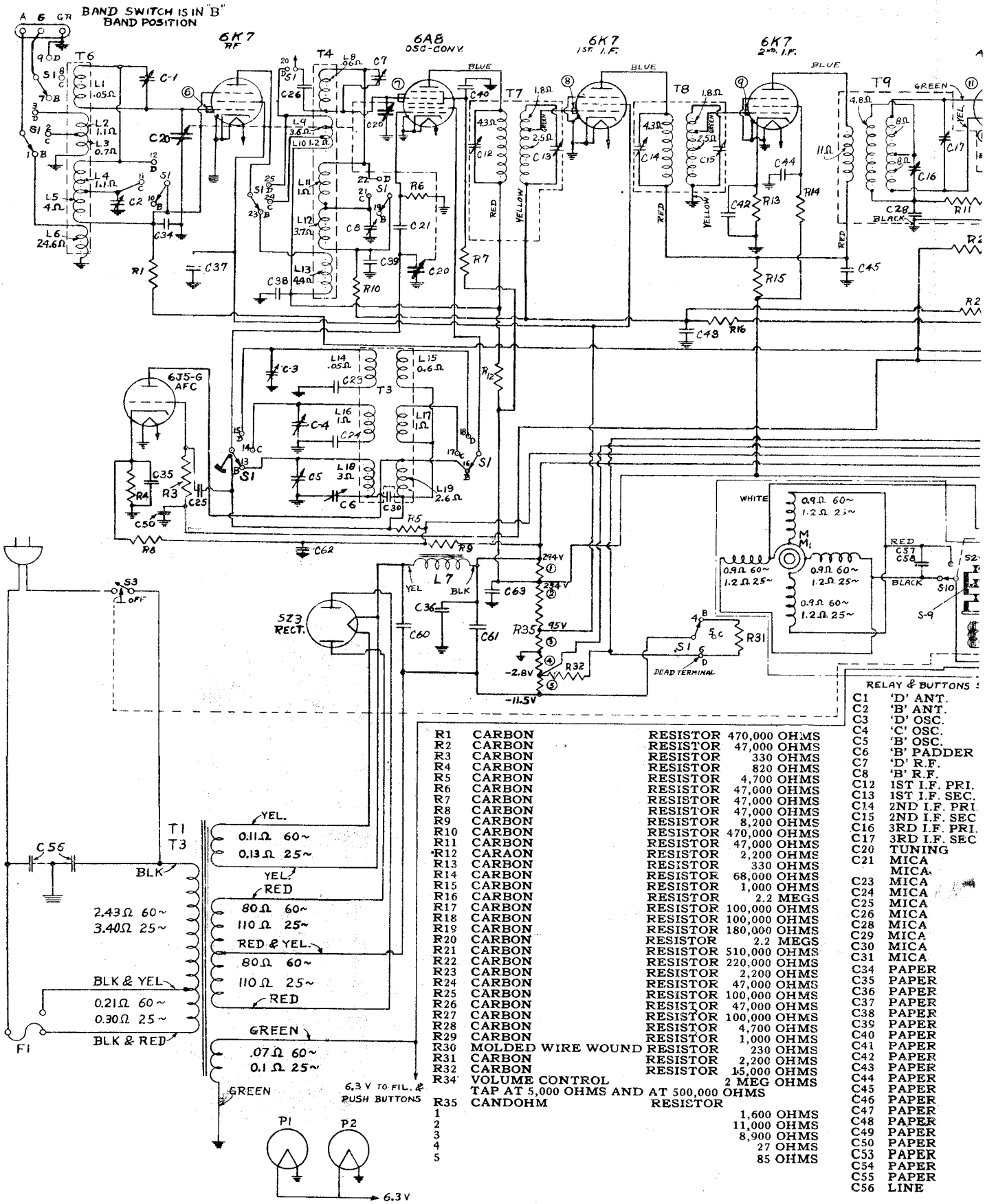

R1	CARBON	RESISTOR	470,000 OHMS
R2	CARBON	RESISTOR	47,000 OHMS
R3	CARBON	RESISTOR	330 OHMS
R4	CARBON	RESISTOR	820 OHMS
R5	CARBON	RESISTOR	4,700 OHMS
R6	CARBON	RESISTOR	47,000 OHMS
R7	CARBON	RESISTOR	47,000 OHMS
R8	CARBON	RESISTOR	47,000 OHMS
R9	CARBON	RESISTOR	8,200 OHMS
R10	CARBON	RESISTOR	470,000 OHMS
R11	CARBON	RESISTOR	47,000 OHMS
R12	CARAON	RESISTOR	2,200 OHMS
R13	CARBON	RESISTOR	330 OHMS
R14	CARBON	RESISTOR	68,000 OHMS
R15	CARBON	RESISTOR	1,000 OHMS
R16	CARBON	RESISTOR	2.2 MEGS
R17	CARBON	RESISTOR	100,000 OHMS
R18	CARBON	RESISTOR	100,000 OHMS
R19	CARBON	RESISTOR	180,000 OHMS
R20	CARBON	RESISTOR	2.2 MEGS
R21	CARBON	RESISTOR	510,000 OHMS
R22	CARBON	RESISTOR	220,000 OHMS
R23	CARBON	RESISTOR	2,200 OHMS
R24	CARBON	RESISTOR	47,000 OHMS
R25	CARBON	RESISTOR	100,000 OHMS
R26	CARBON	RESISTOR	47,000 OHMS
R27	CARBON	RESISTOR	100,000 OHMS
R28	CARBON	RESISTOR	4,700 OHMS
R29	CARBON	RESISTOR	1,000 OHMS
R30	MOLDED WIRE WOUND	RESISTOR	230 OHMS
R31	CARBON	RESISTOR	2,200 OHMS
R32	CARBON	RESISTOR	15,000 OHMS
R34	VOLUME CONTROL TAP AT 5,000 OHMS AND AT 500,000 OHMS		2 MEG OHMS
R35	CANDOHM	RESISTOR	
1			1,600 OHMS
2			11,000 OHMS
3			8,900 OHMS
4			27 OHMS
5			85 OHMS

RELAY & BUTTONS

C1	'D' ANT.
C2	'B' ANT.
C3	'D' OSC.
C4	'C' OSC.
C5	'B' OSC.
C6	'B' PADDER
C7	'D' R.F.
C8	'B' R.F.
C12	1ST I.F. PRI.
C13	1ST I.F. SEC.
C14	2ND I.F. PRI.
C15	2ND I.F. SEC
C16	3RD I.F. PRI.
C17	3RD I.F. SEC
C20	TUNING
C21	MICA
	MICA
C23	MICA
C24	MICA
C25	MICA
C26	MICA
C28	MICA
C29	MICA
C30	MICA
C31	MICA
C34	PAPER
C35	PAPER
C36	PAPER
C37	PAPER
C38	PAPER
C39	PAPER
C40	PAPER
C41	PAPER
C42	PAPER
C43	PAPER
C44	PAPER
C45	PAPER
C46	PAPER
C47	PAPER
C48	PAPER
C49	PAPER
C50	PAPER
C53	PAPER
C54	PAPER
C55	PAPER
C56	LINE

©John F. Rider, Publisher

TRIC CO.

MODEL F-107
Schematic, Resistance Specifications

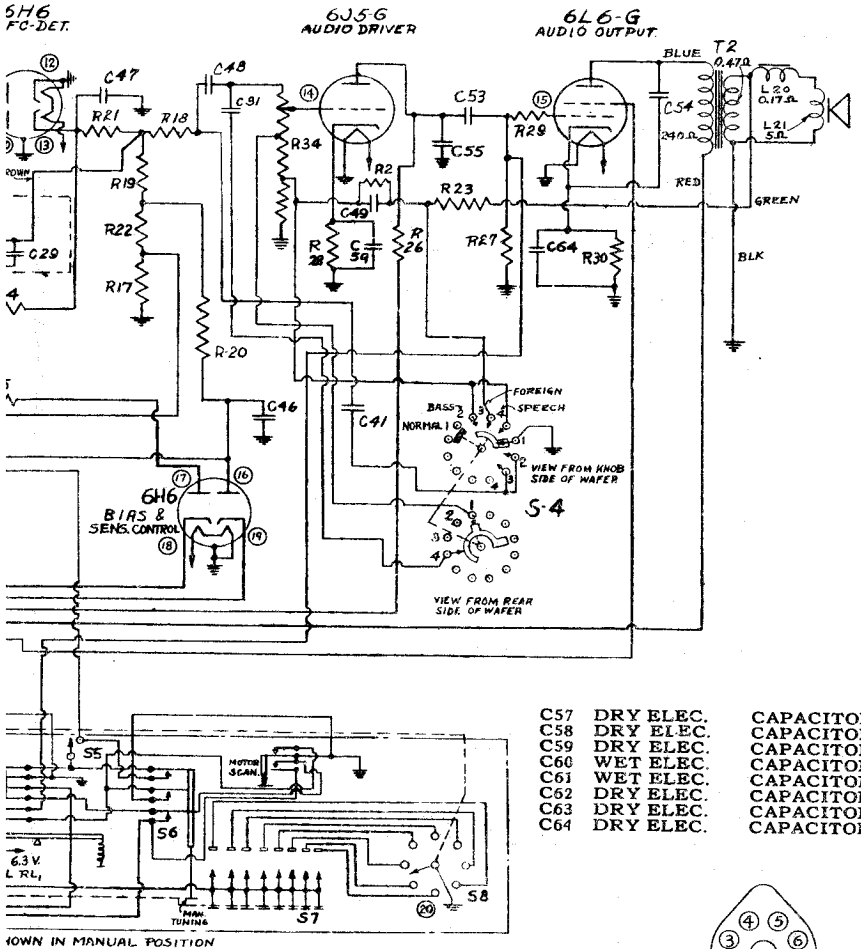

DOWN IN MANUAL POSITION

C57	DRY ELEC.	CAPACITOR 2,300 MF
C58	DRY ELEC.	CAPACITOR 1,000 MF
C59	DRY ELEC.	CAPACITOR 10 MF
C60	WET ELEC.	CAPACITOR 16 MF
C61	WET ELEC.	CAPACITOR 30 MF
C62	DRY ELEC.	CAPACITOR 4 MF
C63	DRY ELEC.	CAPACITOR 10 MF
C64	DRY ELEC.	CAPACITOR 25 MF

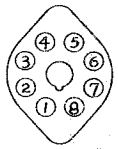

PRONG NUMBERS
BOTTOM VIEW

TRIMMER	5-40 MMF
TRIMMER	5-40 MMF
TRIMMER	5-30 MMF
TRIMMER	5-30 MMF
TRIMMER	5-40 MMF
TRIMMER	175-350 MMF
TRIMMER	2-20 MMF
TRIMMER	2-20 MMF
TRIMMER	(OPERATE 330 MMF)
TRIMMER	(OPERATE 330 MMF)
TRIMMER	(OPERATE 330 MMF)
TRIMMER	(OPERATE 330 MMF)
TRIMMER	(OPERATE 280 MMF)
TRIMMER	(OPERATE 41.5 MMF)
CAPACITOR	10-450 MMF
CAPACITOR	50 MMF
CAPACITOR	MMF
CAPACITOR	3,600 MMF
CAPACITOR	1,300 MMF
CAPACITOR	250 MMF
CAPACITOR	20 MMF
CAPACITOR	150 MMF
CAPACITOR	150 MMF
CAPACITOR	750 MMF
CAPACITOR	150 MMF
CAPACITOR	0.05 MF
CAPACITOR	0.1 MF
CAPACITOR	0.05 MF
CAPACITOR	0.25 MF
CAPACITOR	0.1 MF
CAPACITOR	0.05 MF
CAPACITOR	0.05 MF
CAPACITOR	0.00075 MF
CAPACITOR	0.1 MF
CAPACITOR	0.05 MF
CAPACITOR	0.05 MF
CAPACITOR	0.1 MF
CAPACITOR	0.05 MF
CAPACITOR	0.1 MF
CAPACITOR	0.005 MF
CAPACITOR	0.1 MF
CAPACITOR	0.05 MF
CAPACITOR	0.05 MF
CAPACITOR	0.01 MF
CAPACITOR	0.001 MF
CAPACITOR	0.01-0.01 MF

CONDITIONS OF TEST

WAVE SWITCH ON BAND "B"
POWER SWITCH OFF

APPROXIMATE RESISTANCE MEASUREMENTS

	RESISTANCE TO GROUND	TUBE	SOCKET PRONG	
⑥	3 MEG Ω	R.F. GRID	CAP	
⑦	2.8 MEG Ω	6A8 CONV.	CAP	
⑧	2.8 MEG Ω	1ST I.F. GRID	CAP	
⑨	3 Ω	2ND I.F. GRID	CAP	
⑩	340,000 Ω	DIODE PLATE	PRONG 3	A.F.C. SW. CLOSED
⑪	340,000 Ω	DIODE PLATE	PRONG 5	A.F.C. SW. CLOSED
⑫	GROUNDED	DIODE CATHODE	PRONG 4	
⑬	1 MEG Ω A.F.C. SWITCH OPEN 47,000 Ω A.F.C. SW. CLOSED	DIODE CATHODE	PRONG 8	
⑭	0-2 MEG Ω VOL. CONTROL	1ST AUDIO GRID	PRONG 5	
⑮	100,000 Ω	6L6 GRID	PRONG 5	
⑯	2.5 MEG Ω	DIODE PLATE	PRONG 3	
⑰	2.7 MEG Ω	DIODE PLATE	PRONG 5	
⑱	10,000 Ω	DIODE CATHODE	PRONG 8	
⑲	27 Ω	DIODE CATHODE	PRONG 4	

⑳ 2.2 Ω PIN ON CONTACTOR (CORRESPONDING BUTTON PRESSED)

ALL VOLTAGES TO GROUND UNLESS OTHERWISE SPECIFIED
ALL VOLTAGES MEASURED WITH ANT. & GND. TERMINALS SHORTED & 120 V ON PRI. 125 V Tap

Electrical Specifications

Rating Label	Power Supply (Volts)	Frequency (Cycles)	Power Consumption (Watts)
A	110–120	50–60	145
	(120–130)*		
C	110–120	25	145
	(120–130)*		

*The receivers, as shipped from the factory, have the fuse clipped to the 120–130 volt tap of the transformer, marked 125 on the fuse board. If the normal voltage of your power supply is always below 115 volts, the fuse should be removed from this tap and placed in the lower voltage clip marked 115.

Tuning Frequency Range

Band "B" . . . . . 540–1680 kc.
Band "C" . . . . . 1600–5600 kc.
Band "D" . . . . . 5400–18,000 kc.

Intermediate Frequency . . . . . 465 kc.

Electrical Power Output

Undistorted . . . . . 5½ watts
Maximum . . . . . 10 watts

Tone Control . . . . . 4-point control

Loud-speaker—Electrodynamic

Cone diameter . . . . . 12 inch
Voice coil impedance . . . . . 5.5 ohm at 400 cycles

L7	FIELD COIL 460 OHMS COLD
S1	BAND CHANGE SWITCH
S2	AFC S.T. SWITCH (ON RELAY)
S3	POWER SWITCH
S4	TONE CONTROL SWITCH
S5	AFC CUT-OFF SWITCH
S6	MANUAL TUNING BUTTON
S7	STATION SELECTOR BUTTONS
S8	TUNING CAP. BRAKE SWITCH
S9	MOTOR STOP (ON RELAY)
S10	MOTOR REVERSING SWITCH

PRODUCTION CHANGES
R-9, 7500 OHMS, 2 WATT
C-31 35 MMF

MODEL F-107
Chassis Wiring

GENERAL ELECTRIC CO.

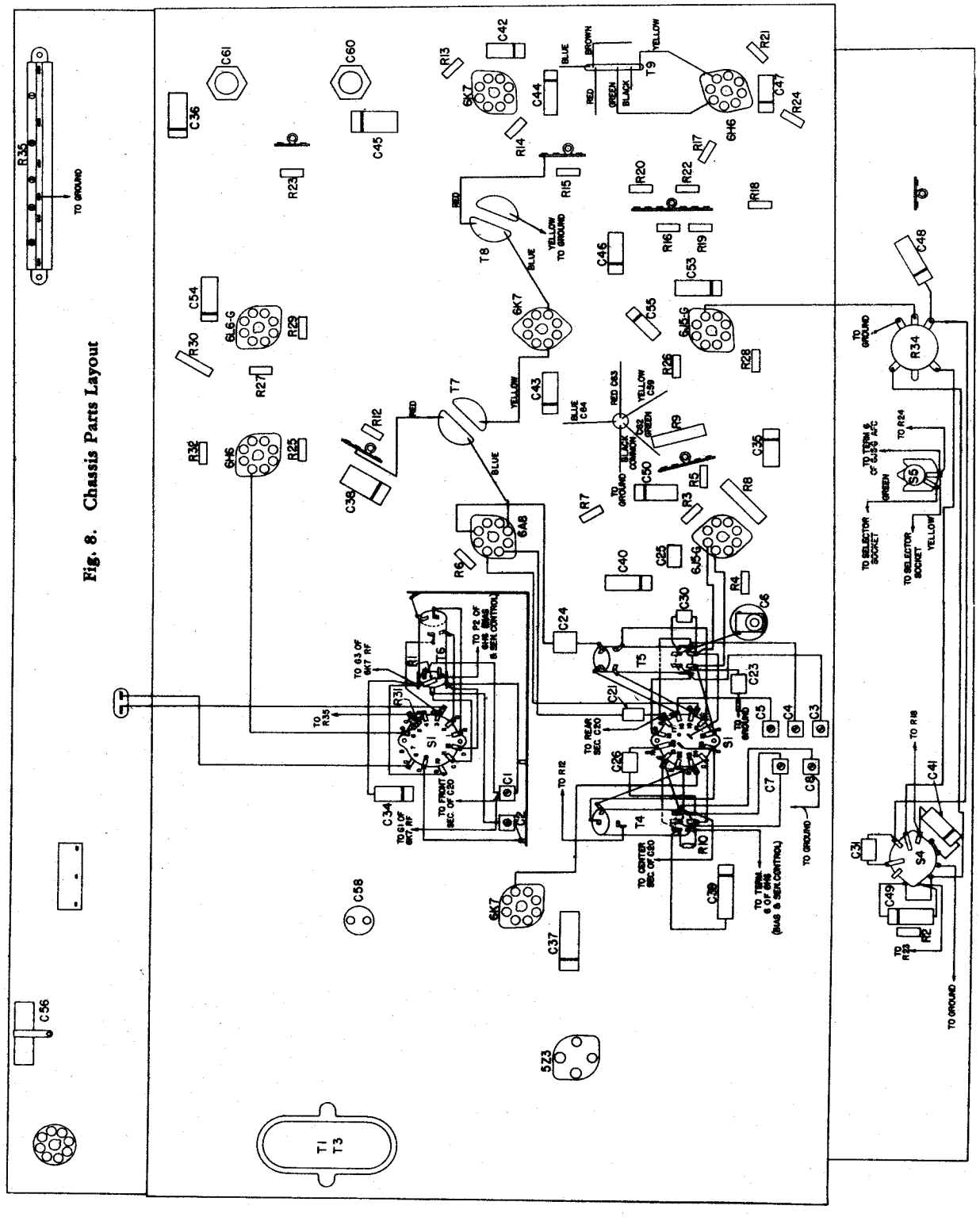

Fig. 8. Chassis Parts Layout

©John F. Rider, Publisher

©John F. Rider, Publisher

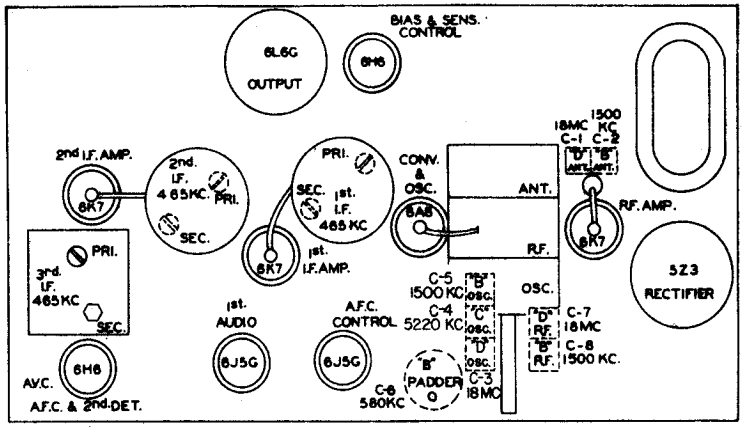

Fig. 9. Chassis Layout and Trimmer Location

ALIGNMENT PROCEDURE

In order to align these receivers properly, it is necessary to have the following test equipment:

1. A modulated test oscillator.
2. An output indicator such as an AC voltmeter with a scale reading of 3 to 5 volts. A cathode ray oscilloscope is preferred for I.F. alignment.
3. A screw-driver type alignment tool.

The alignment procedure is given in table form along with the trimmer location drawing, Fig. 9. A "dummy antenna" should be used in all alignments and is the capacitor or capacitor and resistor used in series with the signal generator. The grid lead should not be removed from the tube to which the input signal is applied when aligning the I.F. as this would remove the grid bias from the tube.

Automatic Frequency Control Adjustments

After I.F. alignment is completed with output meter and without disturbing the generator setting, remove the signal generator lead from the grid of the 6A8 converter. Apply the 465 kc. signal, to the 6A8 grid capacitively through the insulation of the grid lead.

Tune in a weak broadcast station at about 1000 kc. and, with the A.F.C. switch "off," tune the receiver carefully for "Zero" beat between this carrier and the 465 kc. generator signal. Throw the A.F.C. switch on and adjust the 3rd I.F. secondary trimmer (C-17) to zero beat. This adjustment is very critical and must be made with great care. When the alignment is correctly done, there will be no appreciable difference in the beat note with the A.F.C. switch "on" or "off."

Another method of A.F.C. adjustment after I.F. alignment with an output meter is to connect a low range voltmeter between the cathodes of the 6H6 discriminator. Leave the signal generator connected to the 6A8 grid and without disturbing its setting adjust C-17. It will be noticed that the meter reads plus when C-17 is tuned off resonance on one side and negative when tuned on the opposite side of resonance. The correct adjustment of C-17 is between these positions, when the voltmeter reads zero.

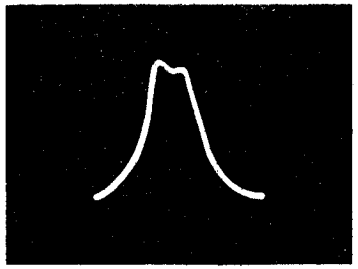

Fig. 10. Over-all I. F. Curve

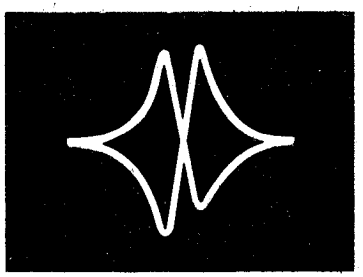

Fig. 11. AFC Adjustment Curve

COIL SYSTEM

The coils for the three bands are wound a single form. The antenna transformer is designated as T-6, the R.F. transformer as T-4 and the oscillator transformer is marked T-3. All contacts on the band switch are numbered in Fig. 7 and Fig. 8 to facilitate tracing the coil circuits.

The band switch connects the coils to operate as follows:

	Ant.	Primary	Secondary	Remarks
"B"	L-6		L-4 & L-5	
"C"	L-8		L-4	L-5 shorted
"D"	L-2 & L-3	L-1		L-4 & L-5 shorted

R.F.			
"B"	L-13	L-11 & L-12	
"C"	L-10	L-11	L-12 shorted
"D"	L-9 & L-10	L-8	L-11 & L-12 shorted
Osc.			
"B"	L-19	L-18	
"C"	L-17	L-16	Connects C-30 across L-18
"D"	L-15	L-14	Connects C-30 across L-16

On "D" band contact No. 9 is used to provide a ground for the General Electric noise reducing antenna systems KV-300 and FT-40.

ALIGNMENT PROCEDURE

I.F. Alignment with Oscilloscope

Band Switch Setting	Input Frequency	Point of Input	Dummy Ant.	Trimmer (See Fig. (9)	Remarks
1. Band "B"	465 kc. Sweep	2nd I.F. Grid	.05 Mfd.	3rd I.F. Pri. (C-16)	A.F.C. switch "off"—Condenser gang at minimum capacity—vertical input ground and the junction of R-18, R-19, R-21 and brown lead from the 3rd I.F. trans. Adjust trimmers in order listed for a single curve of maximum amplitude. The resulting curve with input at converter grid is shown in Fig. 10.
2. Band "B"	465 kc. Sweep	1st I.F. Grid	.05 Mfd.	2nd I.F. Sec. (C-15) Pri. (C-14)	
3. Band "B"	465 kc. Sweep	Converter Grid	.05 Mfd.	1st I.F. Sec. (C-13) Pri. (C-12)	
4. Band "B"	465 kc. Sweep	Converter Grid	.05 Mfd.	3rd I.F. Sec. (C-17)	Disconnect one end of C-47—Turn A.F.C. switch "on"—Vertical input of oscilloscope to ground and discriminator cathode; prong No. 8 on 6H6.—Adjust trimmer for cross on horizontal axis. Fig. 11.

I.F. Alignment with Output Meter

1. Band "B"	465 kc. Modulated	2nd I.F. Grid	.05 Mfd.	3rd I.F. Pri. (C-16)	A.P.C. switch "off"—Condenser gang at minimum capacity—output meter connected across the voice coil—volume control at maximum—input as low as practical. Adjust all trimmers in order listed for maximum output. Do not attempt an over-all re-alignment once a stage alignment has been completed.
2. Band "B"	465 kc. Modulated	1st I.F. Grid	.05 Mfd.	2nd I.F. Sec. (C-15) Pri. (C-14)	
3. Band "B"	465 kc. Modulated	Converter Grid	.05 Mfd.	1st I.F. Sec. (C-13) Pri. (C-12)	
4. Band "B"	.....	.....	.....	3rd I.F. Sec. (C-17)	See paragraph on A.F.C. adjustment.

R.F. Alignment

1 Band "B"					Turn A.F.C. switch "off"—Set dial pointer to first line at left-hand end of dial scale with condenser gang fully meshed.
2 Band "D"	18 mc. Modulated	Antenna post	250 Mmf. 400 ohms	Osc. (C-3) R.F. (C-7) Ant. (C-1)	Connect output meter across voice coil—Turn tone control to bass. D band image should be 930 kc. below input signal when oscillator trimmer (C-3) is peaked properly. Example: 15 mc.—image 14.07 mc. Peak C-7 and C-1 while rocking gang condenser.
3. Band "C"	5220 kc. Modulated	Antenna post	250 Mmf. 400 ohms	Osc. (C-4)	Adjust trimmer for greatest output with dial pointer at 5,220 kc.
4. Band "B"	1500 kc. Modulated	Antenna post	250 Mmf. 400 Ohms	Osc. (C-5) R.F. (C-8) Ant. (C-2)	Adjust trimmers, in order listed, for greatest output at 1500 kc.
5. Band "B"	580 kc. Modulated	Antenna post	250 Mmf. 400 Ohms	Osc. padder (C-6)	Adjust padder for maximum output in vicinity of 580 kc. while rocking gang condenser.
6. Band "B"	Repeat operation No. 4				

SOCKET VOLTAGES

Tube No.		Plate to Ground Volts D-c	Screen Grid to Ground Volts D-c	Cathode to Ground Volts D-c	Cathode Current M.A.	Heater Volts A-c
6K7	R.F. Amplifier	220	95	....	6.0	6.3
6A8	Oscillator	150	....	....	10	6.3
	Converter	220	90			
6J5-G	A.F.C. Control	150	....	6.1	3.5	6.3
6K7	1st I.F. Amplifier	236	92	....	7.0	6.3
6K7	2nd I.F. Amplifier	225	102	3.0	8.6	6.3
6J5-G	Audio	130	....	5.5	1.3	6.3
6L6-G	Output	280	234	13.5	57	6.3
5Z3	Rectifier	660/330 RMS	....	360 d-c	110	5.0

A-C line voltage—120 volts with fuse clipped in the 125 volt tap—no signal input—1000 ohms per volt meter—dial pointer at 580 kc. on Broadcast band.

©John F. Rider, Publisher

AUTOMATIC FREQUENCY CONTROL

The Automatic Frequency Control used in this receiver shifts the oscillator frequency so that the correct intermediate frequency is very closely produced even when the receiver is mistuned several kilocycles.

The essential elements are the discriminator transformer T-9, the twin diode 6H6 with its balanced discriminator network, and the 6J5-G control tube connected across the broadcast oscillator plate coil.

The discriminator transformer is designed to deliver (when properly tuned to 465 kc.) equal voltages to each section of the 6H6 when the receiver is correctly tuned to give an I.F. frequency of 465 kc. Under this condition the voltage drop across R-21 is equal and opposite to the voltage across the total resistance of R-19, R-22 and R-17; thus no discriminator voltage is produced to control the 6J5-G tube.

However, if the signal frequency is increased above 465 kc., unequal voltages are applied to the diodes and the voltage over R-21 is greater than the voltage over the combined resistance of R-19, R-22 and R-17. The difference of these two voltages is positive and is applied to the 6J5-G control tube.

When the signal frequency is decreased below 465 kc., the result is less voltage over R-21 and a greater voltage over the combined resistances R-19, R-22 and R-17. The difference of these two voltages, as applied to the 6J5-G control tube, is negative.

Thus three conditions arise:

On resonance:	no discriminator voltage developed
Above 465 kc.:	a positive control voltage
Below 465 kc.:	a negative control voltage

The 6J5-G A.F.C. control tube has a combination of self and fixed bias, the latter being the result of the current supplied through R-8 to the cathode resistor R-4. The R.F. voltage applied to the control grid of the 6J5-G is obtained from the drop across the C-6 series padder and C-30. The vector sum of these two voltages is applied to the phase shifting network C-25 and R-3 and, in turn, to the control grid. This phase shifting network causes the control tube to appear as a reactance in parallel with the oscillator coil. The value of the apparent reactance depends upon the control voltage produced by the discriminator.

When the set is mistuned above the incoming signal, the converter output is above the 465 kc. required. A positive discriminator voltage is produced as explained above. This causes the 6J5-G tube to act as more capacitive reactance and thus lower the oscillator frequency; this gives a lower converter output frequency, approximately 465 kc.

When the set is mistuned below the incoming signal, the converter output is below the 465 kc. required. A negative discriminator voltage is produced as explained above. This causes the 6J5-G to act as less capacitive reactance thus increasing the oscillator frequency. This in turn gives a higher converter output frequency, approximately 465 kc.

A decided A. F. C. action is apparent on short waves. The discriminator voltage is produced in the same manner as above. However, the action of the 6J5-G tube is different. The 6A8 oscillator plate voltage and 6J5-G plate voltage are supplied through the same resistor (R-5). A positive discriminator voltage allows the 6J5-G plate current to increase, thus reducing the 6A8 oscillator plate voltage. This causes a lower oscillator frequency with the resultant lower converter output frequency, approximately 465 kc.

With a negative discriminator voltage the 6J5-G plate current is less, thus increasing the 6A8 oscillator plate voltage. This causes a higher oscillator frequency with the resultant higher converter output frequency, approximately 465 kc.

DIAL MECHANISM

(A) Manual drive leather-faced bevel gear
(B) Beveled idler gear
(C) Tuning shaft gear
(D) Volume control drive cord pulley
(E) Band switch drive cord pulley
(F) Tone control drive cord pulley
(G) Belt driven spiral rod drive pulley
(1) Spiral drive rod rider
(2) Pointer slider guide rod
(3) Tuning pointer spiral drive rod
(4) Motor belt
(5) Spiral rod bracket with bearing
(6) Motor shaft collar
(7) Clutch tension spring
(8) Pulley dog
(9) Motor shaft collar
(10) Tone control pointer
(11) Tone control cord pulley stud
(12) Band switch indicator
(13) Band switch indicator cord pulley stud
(14) Long dial drive cord
(15) Dial scale pointer
(16) Volume control pointer
(19) Short dial drive cord
(20) Stationary spring support } Fig. 4
(23) Relay armature extension } Fig. 4
(24) Armature back stop } Fig. 4

Tuning mechanism diagram (Fig. 1) is self-explanatory. The tuning condenser drive cord can be easily replaced without removing *any* part of the chassis while all dial indicating control cords are made readily accessible for servicing by merely removing the seven small screws holding the dial reflector assembly.

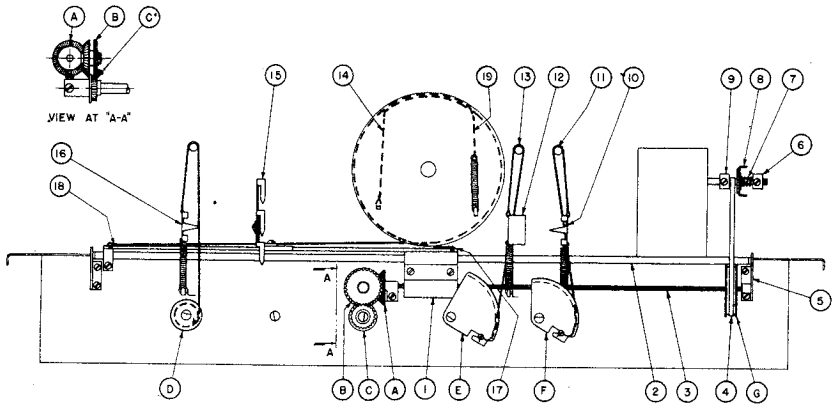

Fig. 1. Dial Mechanism

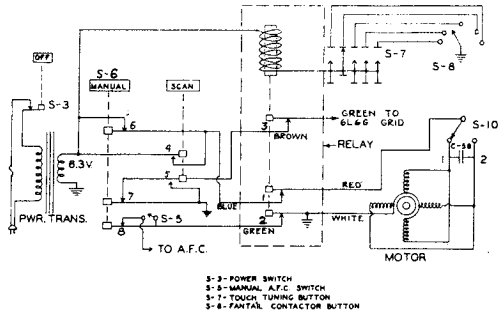

Fig. 2. Schematic of "Touch Tuning" System

TOUCH TUNING

General Electric "Touch Tuning" consists of three essential units; the push-button assembly of sixteen buttons, used by the operator for control; the motor and relay assembly, operating in conjunction with the buttons to provide fast and accurate tuning; and the contact segment with its sliding contactor and adjustable contacts enabling selection of thirteen different stations to be tuned automatically.

Of the sixteen push-buttons, thirteen are used for station selection. The other buttons are used for "Manual" control (No. 8), "Scanning" (No. 15) and "Off" (No. 16). Depression of any button except No. 15 will lock the depressed button and release any other that may be in the circuit. Thus the selection of any station button or of "Manual" will release the "Off" switch turning the set on.

The tuning motor is operated as a capacitor type squirrel cage induction motor, with capacitor, C-58 as the phase shifting device. By tracing the motor circuit it will be seen that C-58 is in series with one set of poles when the motor reversing switch is in the position shown in Fig. 2. When the switch S-10 is reversed the capacitor C-58 is in series with the opposite set of poles. This causes the motor field to rotate in the opposite direction with the resultant change in motor rotation.

The motor power is supplied from the tube heater circuit through "Manual" switch (contact No. 6), Fig. 2, the relay (contact No. 1) and the motor reversing switch (S-10) with the chassis as common return. It will continue to run until the sliding contactor (S-8) contacts the stud on the contact segment which is connected to the button in the circuit. When this contact is made, the relay field coil is energized, causing the relay to open the motor circuit (contact No. 1). At the same time the relay arm also engages the motor clutch, causing instantaneous stopping of tuning mechanism travel. Depression of another station button causes another similar cycle.

Pressing the "Manual" button (S-6) releases any depressed button. Thus S-7 is opened and the relay field coil can not be energized. Contact No. 6 opens the motor circuit. Contacts No. 7 and No. 8 remove the ground from the grid of the 6L6-G and from the A.F.C. circuit respectively.

With the receiver set for "Manual" operation, depression of the "Scan" button closes the motor circuit by the shunting of contact No. 6 on the "Manual" switch allowing continuous motor operation and dial travel. As the motor drives to the dial limits on either end, S-10 is automatically thrown, causing reversal of motor rotation.

During periods of motor operation, either for automatic station selection or for scanning, the grid of the 6L6-G is shorted to ground. This "silent tuning," accomplished by relay contact No. 3, in the former case or scan button contact (No. 5) in the latter, avoids reception of unwanted stations or inter-station noise when tuning automatically or by means of the "Scan" button.

The use of automatic frequency control on "Manual" is made optional by the A.F.C. switch (S-5). When any one of the thirteen "Touch Tuning" buttons is depressed, circuit is made through contact No. 8 on S-6 and is completed through relay contact No. 2, thus removing A.F.C. while the motor is in operation. When the station is reached the relay opens contact No. 2, thus removing the ground on the A.F.C. circuit. *The A.F.C. is automatically turned on when "Touch Tuning" is being used.*

REMOTE CONTROL

There are ten leads in the "Remote Touch Tuning Control" cable. These leads serve the following functions:

The No. 1 and No. 2 leads are connected to the octal base adapter and serve to connect the silencing button to the output tube.

The No. 3 to No. 9 leads correspond to the button numbers and, with the No. 10 lead, provide the selection of stations from the remote control unit. These leads are to be connected to pins on the contact segment on the rear of the chassis.

Remove the least desirable station's letters from one of the "Touch Tuning" buttons of the receiver and insert the "Remote" tab. Note the number of this button as marked on the escutcheon.

Remove from a pin on the contact segment on the receiver, the lead which bears this number, and connect it to the No. 10 lead from the remote control cable, Fig. 3.

(The pin on the contact segment from which this lead was removed is left vacant.)

Now note the number of a receiver push button which bears the same call letters as a remote unit button. Remove the lead with this number from the pin on the contact segment. Connect to this pin the lead from the remote cable which corresponds to the above-mentioned remote unit button. Fasten the lead with a hex nut and tighten lightly with a pair of pliers or small wrench. Now re-connect the original lead to the pin. Proceed in the same manner until the seven remote button leads are connected.

Remove the 6L6G tube and place in the 6L6G tube socket the adapter which is connected to leads No. 1 and No. 2. Insert the 6L6G tube in this adapter.

When the "Remote Touch Tuning Control" unit is connected, as explained above, the action is identical with that of the regular station selection circuit. The remote button unit is in series with the "Remote" button lead on the receiver through lead No. 10 of the remote unit cable. The relay field coil circuit is completed through the set "Remote" button (S-7); the common (No. 10) lead; the depressed control button; its lead to a pin on the contact segment, and to ground through the sliding contactor. *The "Silent" button must be in the released position when operating the receiver from either the remote control unit or from the receiver controls or no audio output will be obtained.*

©John F. Rider, Publisher

RELAY ADJUSTMENTS

The following adjustments should be made with relay assembled on the motor bracket, Fig. 4.

(1) Make sure contacts are adjusted to open in correct sequence: center contacts (motor) first, contacts farthest from armature (AFC) second, contacts nearest armature (silent tuning) last. *It is very important that the silent tuning switch open last.*

(2) Adjust backstop (24) so that the armature snaps closed when the relay coil is energized with 4.5 volts A.C. The backstop must make a positive contact with the back of the armature in the open position; otherwise sluggish operation of the relay will result which will cause the motor drive to skip buttons. If the relay will not close at 4.5 volts and still maintain proper travel and sequence, weaken the spring on the rear of the armature plate by bending the stationary spring support (20).

(3) Loosen the setscrew on the motor shaft collar nearest motor (9) and adjust collar so that the pulley dog (8) misses the relay armature extension by .001 in. (relay not energized). All contacts must be closed when the relay armature touches the end of the motor dog; if the motor contacts open in this position the armature will chatter.

(4) Spring adjustment (7) on slip clutch should be just tight enough so as not to allow slippage of motor when driving the dial mechanism. Loosen setscrew on outside shaft collar (6) and screw the collar on the shaft to tighten slip clutch.

(5) The pole piece of the relay coil is divided in two semicircles. The relay armature should only touch the pole segments towards the motor shaft. There should be a .001 in. clearance between the back segment (21) and the armature when closed; otherwise a buzzing will be heard. Sometimes a front pole segment that is not perfectly flat will cause the same trouble. File off the offending bump.

(6) Backstop setting should be such that the distance (22) is 26/32 in. with the relay closed and 29/32 in. with the relay open.

(7) Spacing between relay contact points when open should be .015 to .018 inches for contact No. 1 and .008 to .010 inches for contact No. 2 and No. 3.

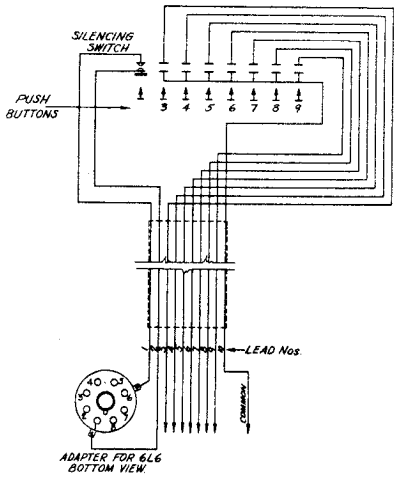

Fig. 3. Schematic of Remote Control

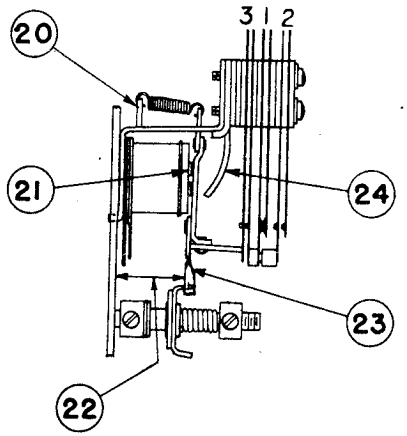

Fig. 4. Relay

INCORRECT OPERATION AND SUGGESTED REMEDIES

Skipping of Stations

(a) "Touch Tuning" button leads not making good contact to adjustable contact pins. Clean contacts and re-insert.

(b) Sliding contactor blade either covered by thin piece of bakelite or dirty. Carefully run fine file over top of sliding contactor, making sure not to leave any sharp corners. Sliding contactor should have a small amount of vaseline on beveled surface to prevent chattering.

(c) Nipple too sharp on adjustable contacts will cause sliding contactor blade to jump across. Smooth off with fine sand paper.

(d) Relay armature out of adjustment causing sluggish operation of relay switch. See paragraph 2 under Relay Adjustments.

(e) Excessive side play in sliding contactor. Loosen the setscrew on the back of the sliding contactor and slide holder together. Final adjustment should allow sliding contactor to rock freely.

(f) Not enough tension on sliding contactor arm. Loosen collar on shaft in rear of contact segment and move sliding contactor arm towards the contact segment; then tighten collar on shaft.

(g) If the contacts at the rear of the "Touch Tuning" button assembly shafts do not close or make good contact, the motor will continue to scan the dial without stopping at the desired station.

(h) Contact segment may be bent out of shape. This should be perpendicular to chassis deck and parallel to rear chassis apron in order to allow the contactor arm to wipe the adjustable contacts evenly.

No Action When Station Button Is Pressed

(a) Relay remains energized and audio continues to function—push button escutcheon grounded. Be sure dial and push button escutcheons are insulated from each other or from the control shafts.

(b) "Off" switch contacts do not close.

(c) If set does not tune automatically unless scan button is also depressed, contacts No. 6, Fig. 2, require closer spacing.

(d) Open or shorted motor capacitor—Characterized by motor armature humming but no torque. Replace 1000 mfd. capacitor C58

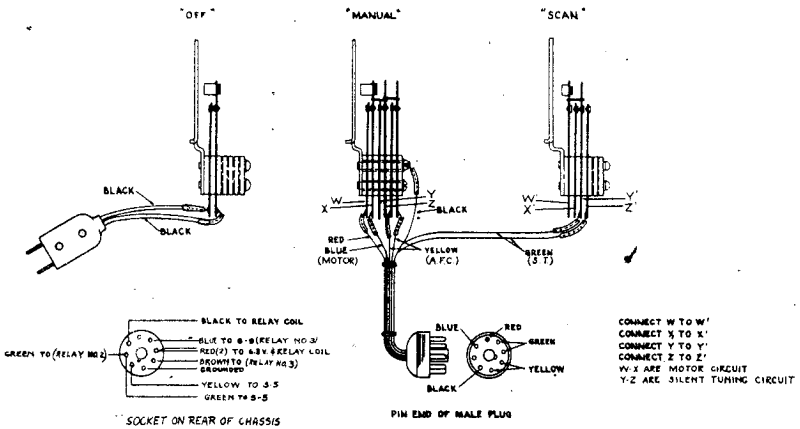

Fig. 5. Wiring Diagram of "Off," "Manual" and "Scan"

(e) Open or shorted coil in motor—Characterized by no torque or low torque in one direction. Replace motor or repair coil.

(f) Drive mechanism bound, or too tight for motor to drive.

(g) Not enough friction in Slip Pulley—The friction of the slip pulley is adjusted by tightening the collar on the end of the motor shaft. Care should be exercised that the setscrew does not hit the relay armature.

(h) Belt slippage—The tension of the belt may be increased by raising the motor on the relay bracket. If the belt still slips, reverse belt and use other surface or use belt dressing.

Noise in Audio Output While "Touch Tuning"

(a) Improper sequence—If the relay switch contacts open in improper sequence, audio output will be available too soon, and the break in the motor switch will be heard in the speaker. Correct as described in (1) under Relay Adjustments.

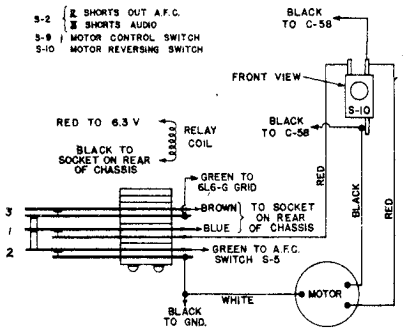

Fig. 6. Motor Relay Wiring Diagram

(b) Dressing of Silent Tuning Lead—Early production receivers had silencing lead from 6L6 grid run to connector socket on rear apron, up to "Push Button" switch, and return through socket connector to the relay switch where the ground wires of AFC, motor and silent tuning contacts were connected together and grounded to chassis. Reconnect as follows: Ground A.F.C. and motor contacts to a point of the chassis directly underneath the motor. The green grid lead from the 6L6 should be rewired over the top of the chassis deck to the silencing contact, Fig. 6, of the relay switch; the lead from the other relay silencing contact should be connected to a prong of the connector plug, Fig. 5; from this point, connection is made to the silencing portion of the "Touch Tuning" switch, and a return to ground from this point is made through the connector plug to the chassis near the connector plug socket.

(c) Noise through filter circuit—The "blurp" in the speaker on early production due to the sudden application of audio may be reduced by placing a .05 mfd., 600-volt capacitor (RC-092) across the output filter capacitor (C-61).

Miscellaneous Adjustments

(a) When a "Touch Tuning" button will not remain in a locked position, it usually indicates that the springs at each end of the latch bar are not in proper adjustment. They should exert an equal pull on each end.

(b) The fork on the tuning condenser should be adjusted so that the motor reversing switch clicks over when the pointer approximately reaches the 540 and 1620 kc. markings on the dial scale. With the pointer at the extreme end of calibrations when tuning manually, the reversing switch lever should be set so there is not more than 1/16 in. nor less than 1/32 in. clearance between the lever and the switch trigger after the switch has snapped.

(c) The motor and relay mounting plate should rest parallel to the chassis deck. Do not adjust the spring tension foot; raise or lower motor on bracket, as required. Make sure that there is no electrical connection between the motor frame and the chassis.

(d) The "Off" switch on the "Touch Tuning" assembly should stay closed for at least one-half the movement of the key, opening only on the final click. If firm contact does not exist between the points, vibration of the set may cause an intermittent noise.

(e) The silent tuning contacts of the "Manual" and "Scan" switches should open last to permit quiet operation.

GENERAL ELECTRIC CO.

MODEL G-97
Schematic, Socket
Trimmers, Resistance
Dial Mechanism

MODEL G-97

Fig. 3. Schematic Diagram

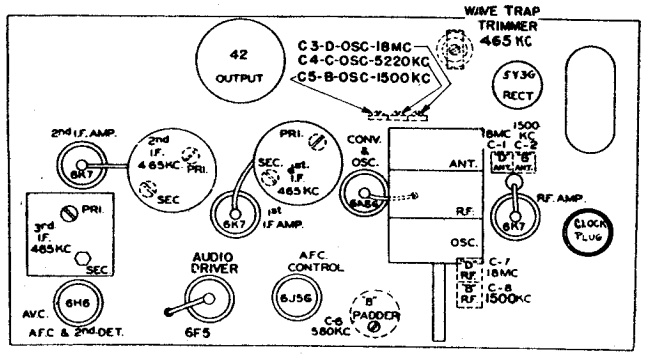

Fig. 1. Trimmer Location

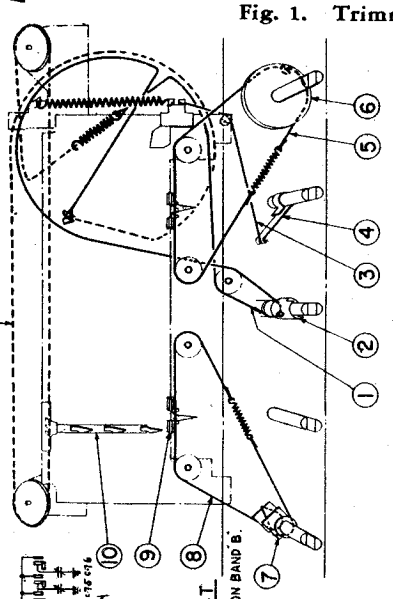

Fig. 2. Dial Mechanism

Symbol	Description	
R1	Carbon Resistor	470,000 Ω
R2		68,000 Ω
R3		330 Ω
R4		850 Ω
R5		4,700 Ω
R6		47,000 Ω
R7		47,000 Ω
R8		47,000 Ω
R9		4,700 Ω
R10		470,000 Ω
R11		47,000 Ω
R12		2,200 Ω
R13		330 Ω
R14		68,000 Ω
R15		1,000 Ω
R16		2.2 Meg. Ω
R17		1.5 Meg. Ω
R18		100,000 Ω
R19		100,000 Ω
R20		100,000 Ω
R21		2.2 Meg. Ω
R22		510,000 Ω
R23		220,000 Ω
R24		15,000 Ω
R25		47,000 Ω
R26		150 Ω
R27		220,000 Ω
R28		470,000 Ω
R29		2700 Ω
R30		470,000 Ω
R31		390 Ω
R32	Carbon Resistor	3300 Ω
R34	Volume Control, 5 Meg. Taper	5000 Ω & 500,000 Ω
R35	Carbohm Resistor	850 Ω
		10,500 Ω
		10,000 Ω
R36	Molded W.W. Resistor	410 Ω
S1	Band Change Switch	
S3	Power Switch with S-4	
S4	Tone Control	
S5	AFC Cut Off Switch	
S6	Switch - Ant. Man.	
S7	Switch - R.F. Man.	
S8	Switch - Osc. Man.	
S9	I.F. Bias Change Switch	
C1	"B" Antenna Trimmer	5-40 MMF
C2	"B" Antenna	5-40 MMF
C3	"B" Osc.	5-40 MMF
C4	"B" Osc.	5-50 MMF
C5	"B" Osc.	5-40 MMF
C6	"B" Padder	115-350 MMF
C7	"B" R.F.	7-70 MMF
C8	"B" R.F.	2-20 MMF
C9	Wave Trap	17-45 MMF
C10	1st I.F. Pri.	
C11	1st I.F. Sec.	
C12	2nd I.F. Pri.	
C13	2nd I.F. Sec.	
C14	3rd I.F. Pri.	
C15	3rd I.F. Sec.	
C16	I.F. Trimmer	
C17	Tuning Capacitor	
C18	Mica Capacitor	50 MMF
C19		7250 MMF
C20		1500 MMF
C21		250 MMF
C22		15 MMF
C23		150 MMF
C24		150 MMF
C25		750 MMF
C26	Mica Capacitor	35 MMF
C27	Paper	.035 MFD.
C28		.1 MFD.
C29		.25 MFD.
C30		.1 MFD.
C31		.05 MFD.
C32		.05 MFD.
C33		.00075 MFD.
C34		.1 MFD.
C35		.05 MFD.
C36		.1 MFD.
C37		.05 MFD.
C38		.1 MFD.
C39		.005 MFD.
C40		.05 MFD.
C41		.05 MFD.
C42		.1 MFD.
C43		.1 MFD.
C44		.01 MFD.
C45		.010 MFD.
C46	Mica	250 MMF.
C47	Electrolytic Capacitor	.01-.01 MFD.
C48	Dry Electrolytic	10 MFD.
C49	Wet Electrolytic	16 MFD.
C50	Wet Electrolytic	30 MFD.
C51	Dry Electrolytic	4 MFD.
C52	Dry Electrolytic	10 MFD.
C53	Dry Electrolytic	25 MFD.
C54	Selector Trimmer	220-550 MMF.
C55		140-320 MMF.
C56		80-225 MMF.
C57		70-170 MMF.
C58		30-100 MMF.
C59		10-50 MMF.
C60		200-450 MMF.
C61		140-320 MMF.
C62		80-225 MMF.
C63		70-170 MMF.
C64		30-100 MMF.
C65		10-50 MMF.
C76	Selector Trimmer	

IF PEAK 465 KC

BAND SWITCH IS IN BROADCAST POSITION

CONDITIONS OF TEST

WAVE BAND SWITCH ON BAND B.
POWER SWITCH OFF.
ANTENNA SHORTED - 120 V. ON PRI.

ALL VOLTAGES TO GROUND UNLESS OTHERWISE SPECIFIED
ALL VOLTAGES MEASURED WITH ANT. & GND TERMINALS SHORTED - 120 V. ON PRI.

APPROXIMATE RESISTANCE MEASUREMENTS

TUBE	SOCKET PRONG	RESISTANCE TO GROUND
6K7 R.F.	GRID	3 MEG. Ω
6A8 CONV.	CAP	2.8 MEG. Ω
6K7 1st I.F.	GRID	2.4 Ω
6K7 2nd I.F.	PLATE	340,000 Ω
6K7 2nd I.F.	GRID	340,000 Ω
6K7 2nd I.F.	GROUNDED	1 MEG. Ω
6H6 DIODE	CATHODE	47,000 Ω
6H6 DIODE	CATHODE	0.2 MEG. Ω
6F5 1st AUDIO	GRID	470,000 Ω
42	GRID	
6F5	PLATE	
42	PLATE	
5Y3G	PRONG 3	A.F.C. SWITCH CLOSED
5Y3G	PRONG 5	A.F.C. SWITCH CLOSED
5Y3G	PRONG 4	
6H6 DIODE	PRONG 8	
6H6 DIODE	CAP	
1st AUDIO	PRONG 4	
42	GRID	

PRONG NUMBERS BOTTOM VIEWS

©John F. Rider, Publisher

MODEL G-97
Specifications
Circuit Data, Alignment
Tuner, Parts

GENERAL ELECTRIC CO.

SERVICE DATA

Electrical Specifications

Rating Label	Power Supply (Volts)	Frequency (Cycles)	Power Consumption (Watts)
A	110–120 (120–130)*	60	105
For 50 cycles only	110–120 (120–130)*	50	105
For 25 cycles only	110–120 (120–130)*	25	105

* The receiver as shipped from the factory, has the power cord connected to the 120–130 volt tap of the transformer (red and black lead). If the normal voltage of your power supply is always below 115 volts, the power cord should be removed from this tap and connected to the lower voltage tap (yellow and black lead). Solder and tape the joint and also tape the exposed end of the unused lead.

Tubes

R.F. Amplifier	6K7 Triple-grid, super control amplifier
Osc. and Converter	6A8-G Pentagrid Converter
AFC Control	6J5-G Detector Amplifier Triode
1st I.F. Amplifier	6K7 Triple-grid, super control amplifier
2nd I.F. Amplifier	6K7 Triple-grid, super control amplifier
Detector, AVC and AFC	6H6 Twin Diode
1st Audio Amplifier	6F5 High Gain Triode
Audio Power Amplifier	42 Power Amplifier Pentode
Rectifier	5Y3G Full-wave Rectifier
Dial Lamp	MAZDA No. 46-6.3 volts; 0.25 amps.

GENERAL INFORMATION

Model G-97 is a three-band AC operated receiver, employing nine General Electric pre-tested tubes as described above, in a superheterodyne circuit. It incorporates the simplified "Touch-Tuning" system as well as the Automatic Station Timer. The "Touch-Tuning" system allows a set-up of six buttons for automatic tuning of your favorite stations. The Automatic Station Timer may be set up in advance so that the set power will be automatically turned on at a predetermined time and in a similar manner it will turn "off" the receiver at any pre-set quarter-hour interval. Other features of design include automatic frequency control, four-point tone control by degeneration, and two stages of I.F. amplification.

Receiver Operation

The R.F. amplifier consists of the antenna transformer (T-6) connected to the 6K7 which is coupled to the 6A8-G through the R.F. transformer (T-4). The signal is converted to an intermediate frequency of 465 kc. by the oscillator and converter tube 6A8-G. The intermediate frequency is then amplified by the two 6K7 tubes used in conjunction with the three double-tuned I.F. transformers. The primary and secondary coils of these I.F. transformers are carefully adjusted midway between the points of critical and over coupling so as to give the I.F. amplifier a broadened band width with the resultant improvement in fidelity of the received program.

The output of the I.F. amplifier is applied to a 6H6 twin diode, which is a combination detector, automatic volume control and discriminator voltage source for the automatic frequency control tube 6J5-G.

The volume is controlled by a potentiometer in the grid circuit of the 6F5 audio amplifier tube. This tube is resistance coupled to the 42 pentode output tube. The output transformer is designed to correctly load the 42 tube over a broad range of frequencies thus enabling the tube to deliver ample undistorted output to the 12-inch speaker.

A detailed description of the inverse-feedback tone control, coil system, AFC, and touch-tuning as used in this receiver, will be found in the Model F-96 service notes.

Operation

There are 48 keys located on the circumference of the clock dial, each of which represents a 15-minute interval. When a key is pulled out, the timer will automatically turn on the radio for the indicated 15 minutes; i.e., by pulling out the red key at 6, the power will be turned "on" at 6:00 and turned "off" at 6:15. The operating period actually starts a minute or two before the indicated time so that the tubes will have a chance to reach their operating temperature before the program begins. Likewise, the operating period is prolonged beyond the indicated time by a minute or two. At the end of the operating period, the power will be automatically turned off unless the next key (in a clockwise direction) is also pulled out.

Since the tone control operates the manual power switch, it is necessary to leave the tone control in the "off" position whenever automatic operation by the Station Timer is desired. In the "off" position (refer to Fig. 3), the tone control is set for the same range of frequencies that is available on the "normal" position except for a slight loss in the treble due to the removal of the injector capacitor, C-31.

Station Timer Operating Notes

1. Timer keys cannot easily be pulled out except in advance of the program. Keys may be pushed in at any time, but unless this is done during the first half of the 15-minute interval, the receiver will continue to operate until the conclusion of this 15-minute interval.
2. Receiver will operate normally without clock plug in chassis receptacle. The four-prong plug merely connects the clock switch in parallel with the receiver switch and connects the clock to the power supply.
3. After the Automatic Timer has been used, the keys will automatically reset to their "off" position so that the program will not be repeated at the end of 12 hours unless the keys are again pulled out.
4. Red keys indicate hours.
5. The receiver may be tuned manually or with "Touch-Tuning" at any time during operation without disturbing the Timer Operation.

DIAL MECHANISM

The dial mechanism is rigidly mounted to the chassis by means of two brackets and four self-tapping screws. The gang condenser is operated by means of an "automatic vernier" reduction drive unit, mounted on the receiver chassis, and connected to the gang drive drum by a drive cable. The threading of the various controls is shown in Fig. 2.

ALIGNMENT PROCEDURE

Refer to the Model F-96 service notes for a detailed description of the R.F. and I.F. alignment procedure. A cut showing the trimmer location and alignment frequencies is shown in Fig. 1.

To align the Automatic Frequency Control Circuit, the following method is recommended: after aligning the I.F. at 465 kc.; without disturbing the signal generator setting, apply the 465 kc. from the signal generator lead to the 6A8-G grid capacitively through the insulation of the grid lead.

Tune in a weak broadcast station at about 1000 kc. and, with the AFC switch "off," tune the receiver carefully for "zero" beat between this carrier and the 465 kc. generator signal. Throw the AFC switch on and adjust the 3rd I.F. secondary trimmer (C-17) to zero beat. This adjustment is very critical and must be made with great care. When the alignment is correctly done, there will be no appreciable difference in the beat note with the AFC switch "on" or "off."

Tuning Frequency Range

Band "B"	540–1640 kc.
Band "C"	1600–5650 kc.
Band "D"	5600–18,000 kc.

Intermediate Frequency ..... 465 kc.

Electrical Power Output

Undistorted	2.5 watts
Maximum	5.0 watts

Physical Specifications

Model	G-97
Height	41½ inches
Width	28¼ inches
Depth	14¼ inches
Weight (packed)	94 lbs.

Tuning Control Drive Ratio

Fast Tuning	10 to 1
Vernier Tuning	55 to 1

Loud-speaker—Electrodynamic

Cone	12-inch
Voice Coil Impedance	5.5 ohms at 400 cycles

Tone Control 4-position

AUTOMATIC STATION TIMER

The Automatic Station Timer is a self-starting, synchronous motor clock which controls a power switch by 48 15-minute intervals. This clock-controlled power switch is connected in parallel with the regular receiver power switch incorporated in the tone control mechanism, allowing the set power to be automatically turned "on" or "off" at a predetermined time. The clock is properly lubricated as it leaves the factory and should require no further attention.

To Set Timer

Pull out the setting knob on the back of the clock and turn it to the left. Rotation to the right will loosen the setting knob.

REPLACEMENT PARTS — Model G-97

The following revisions, in conjunction with the Model F-96 replacement parts list constitute a complete parts list for the Model G-97 receiver. When ordering parts, refer to the RFS-96 service notes, noting the following changes:

Stock No.	Description	List Price
	Remove	
RB-607	BUTTON—Push Button (Pkg. of 5)	$0.20
RD-062	DIAL—Dial Scale	3.50
RE-023	ESCUTCHEON—Push-button Escutcheon	.70
RE-024	ESCUTCHEON—Escutcheon for Dial (Complete)	2.10
RK-017	KNOB—Contrpl Knob (Pkg. of 5)	.40
RK-018	KNOB—Control Knob (Winged) (Pkg. of 5)	.40
	Add	
RB-615	BUTTON—Touch-tuning Button (Pkg. of 5)	$0.45
RD-075	DIAL—Dial Scale	1.25
RE-034	ESCUTCHEON—Dial Scale Escutcheon	2.00
RE-035	ESCUTCHEON—Touch-tuning Escutcheon	.85
RK-027	KNOB—Control Knob (Winged) (Pkg. of 5)	.30
RK-028	KNOB—Control Knob (Plain) (Pkg. of 5)	.50
*RS-204	SOCKET—Tube Socket (5Y3G) (Pkg. of 5)	.75
RS-865	SCREWS—Escutcheon Screws (Pkg. of 20)	.05

(Prices subject to change without notice)

* Used on previous receivers.

©John F. Rider, Publisher

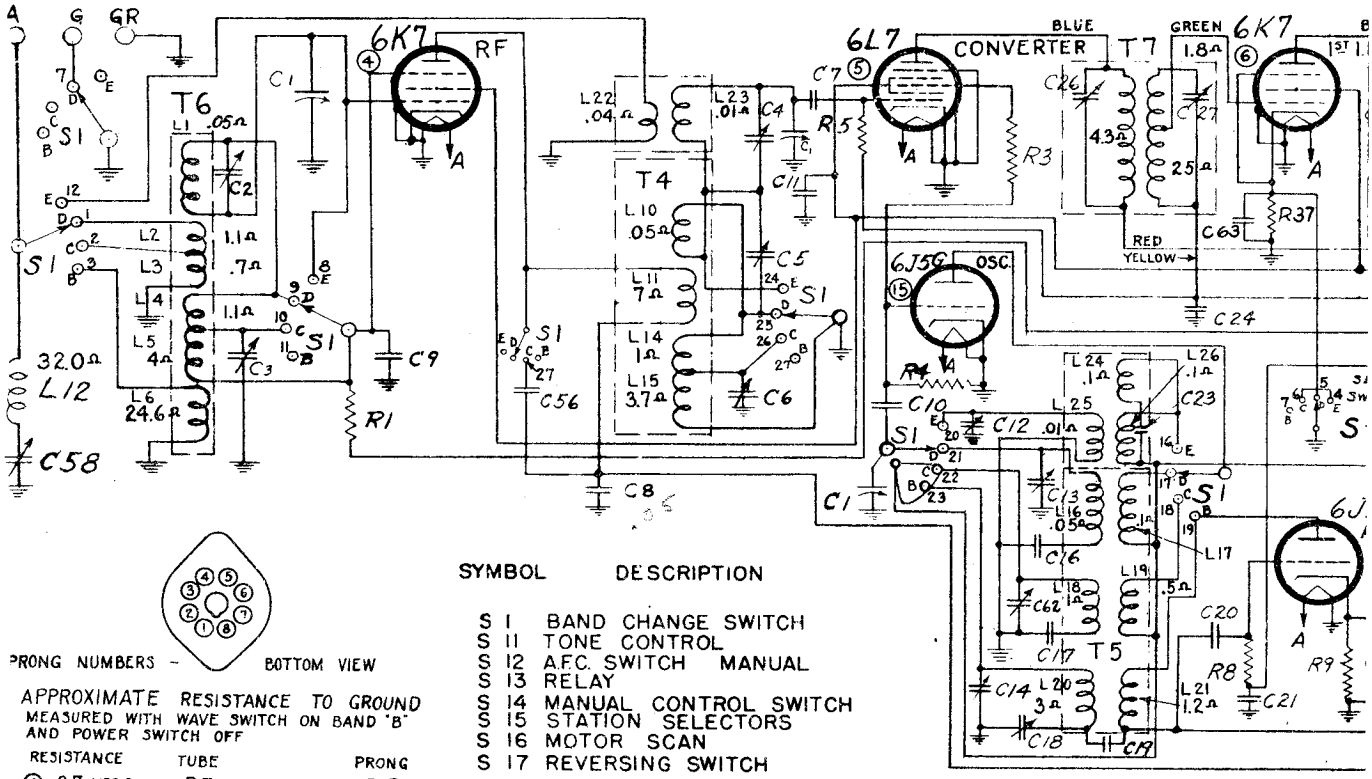

PRONG NUMBERS — BOTTOM VIEW

APPROXIMATE RESISTANCE TO GROUND
MEASURED WITH WAVE SWITCH ON BAND "B" AND POWER SWITCH OFF

	RESISTANCE	TUBE	PRONG
④	2.7 MEG Ω	R.F.	CAP
⑤	3.5 MEG Ω	CONV.	CAP
⑥	1.1 MEG Ω	1ST I.F.	CAP
⑦	2.5 Ω	2ND I.F.	CAP
⑧	550,000 Ω	DET. & A.V.C. DIODE	#3
⑨	550,000 Ω	" " "	#5
⑩	GROUND	" " "	#8
⑪	1 MEG Ω (AFC OPEN) / 470,000 Ω (AFC CLOSED)	" " "	#4
⑫	0 Ω TO 2 MEG Ω (VOL. CONTROL)	1ST AUDIO	#5
⑬	120,000 Ω	OUTPUT	#5
⑭	120,000 Ω	OUTPUT	#5
⑮	47,000	OSC.	CAP
⑯	8200 Ω	PHASE INVERTER	#5
⑰	20 Ω	BIAS DIODE	#4
⑱	2.5 MEG Ω	" "	#5
⑲	2.2 MEG Ω	" "	#3

ALL VOLTAGES TO GROUND UNLESS OTHERWISE SPECIFIED. ALL VOLTAGES MEASURED WITH ANT. & GROUND TERMINALS SHORTED & 115 V. ON PRI. (115 V. TAP).

SYMBOL	DESCRIPTION
S 1	BAND CHANGE SWITCH
S 11	TONE CONTROL
S 12	A.F.C. SWITCH MANUAL
S 13	RELAY
S 14	MANUAL CONTROL SWITCH
S 15	STATION SELECTORS
S 16	MOTOR SCAN
S 17	REVERSING SWITCH

R 1	CARBON RESISTOR	220,000 Ω
R 2		68,000 Ω
R 3		220 Ω
R 4		47,000 Ω
R 5		1.0 MEG. Ω
R 6		330 Ω
R 7		470,000 Ω
R 8		330 Ω
R 9		820 Ω
R 10		3300 Ω
R 11		47,000 Ω
R 13		3300 Ω
R 14		47,000 Ω
R 15		510,000 Ω
R 16		180,000 Ω
R 17		220,000 Ω
R 18		100,000 Ω
R 19		2.2 MEG. Ω
R 20		270,000 Ω
R 21	CARBON RESISTOR	180,000 Ω
R 22	VOLUME CONTROL	2.0 MEG. Ω
	TAP AT	500,000 Ω
R 23	CARBON RESISTOR	68,000 Ω
R 24		120,000 Ω
R 25		8200 Ω
R 26		68,000 Ω
R 27		180 Ω
R 28		120,000 Ω
R 29		4700 Ω
R 30		22,000 Ω
R 31		100,000 Ω
R 32		680 Ω
R 34		1.0 MEG. Ω
R 35		3300 Ω
R 36		3300 Ω
R 37	CARBON RESISTOR	2700 Ω

SYMBOL	DESCRIPTION	
R 40	CANDOHM RESISTOR SECTION 1	5,000 Ω
	2	5,000 Ω
	3	18 Ω
R 41	CARBON RESISTOR	1000 Ω
R 42	CARBON RESISTOR	1000 Ω

C 1.	TUNING CAPACITOR	10-450 MMF
C 2	TRIMMER	5-40 MMF
C 3		5-40 MMF
C 4		50-120 MMF
C 5		2-20 MMF
C 6	TRIMMER	2-20 MMF
C 7	MICA	50 MMF
C 8	PAPER	.05 MF
C 9	PAPER	.05 MF
C 10	MICA	50 MMF
C 11	PAPER	.1 MF
C 12	TRIMMER	5-45 MMF
C 13	TRIMMER	5-30 MMF
C 14	TRIMMER	5-30 MMF
C 15	PAPER	.05 MF
C 16	MICA	3000 MMF
C 17	MICA	1300 MMF
C 18	PADDER	140-280 MMF
C 19	PAPER	.005 MMF
C 20	MICA	250 MMF
C 21	PAPER	.10 MF
C 22	PAPER	.05 MF
C 23	MICA	40 MMF
C 24	PAPER	.05 MF
C 25	PAPER CAPACITOR	.05 MF

©John F. Rider, Publisher

ELECTRIC CO.

MODEL F-135
Schematic, Resistance

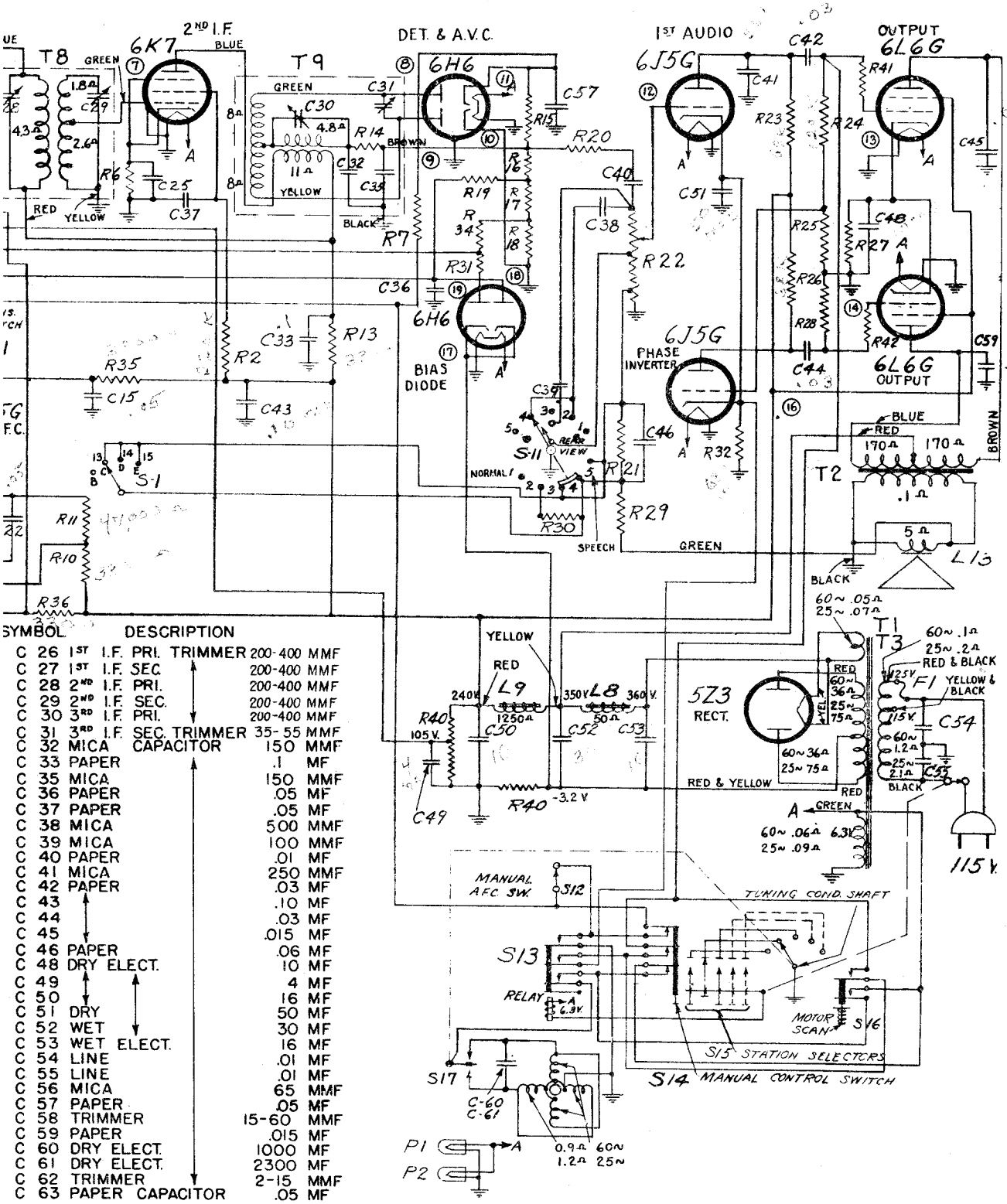

SYMBOL	DESCRIPTION	
C 26	1ST I.F. PRI. TRIMMER	200-400 MMF
C 27	1ST I.F. SEC.	200-400 MMF
C 28	2ND I.F. PRI.	200-400 MMF
C 29	2ND I.F. SEC.	200-400 MMF
C 30	3RD I.F. PRI.	200-400 MMF
C 31	3RD I.F. SEC. TRIMMER	35-55 MMF
C 32	MICA CAPACITOR	150 MMF
C 33	PAPER	.1 MF
C 35	MICA	150 MMF
C 36	PAPER	.05 MF
C 37	PAPER	.05 MF
C 38	MICA	500 MMF
C 39	MICA	100 MMF
C 40	PAPER	.01 MF
C 41	MICA	250 MMF
C 42	PAPER	.03 MF
C 43		.10 MF
C 44		.03 MF
C 45		.015 MF
C 46	PAPER	.06 MF
C 48	DRY ELECT.	10 MF
C 49		4 MF
C 50		16 MF
C 51	DRY	50 MF
C 52	WET	30 MF
C 53	WET ELECT.	16 MF
C 54	LINE	.01 MF
C 55	LINE	.01 MF
C 56	MICA	65 MMF
C 57	PAPER	.05 MF
C 58	TRIMMER	15-60 MMF
C 59	PAPER	.015 MF
C 60	DRY ELECT.	1000 MF
C 61	DRY ELECT.	2300 MF
C 62	TRIMMER	2-15 MMF
C 63	PAPER CAPACITOR	.05 MF

©John F. Rider, Publisher

ALIGNMENT PROCEDURE

I.F. Alignment with Oscilloscope

Band Switch Setting	Input Frequency	Point of Input	Dummy Ant.	Trimmer (See Fig. 9)	Remarks
1. Band "B"	465 kc. Sweep	2nd I.F. Grid	.05 Mfd.	3rd I.F. Pri. (C-30)	A.F.C. switch "off" —Condenser gang at minimum capacity vertical input of oscilloscope to ground and the junction of R-15, R-16, R-20 and Brown lead from the 3rd I.F. trans. Adjust trimmers in order listed for a single curve of maximum amplitude. The resulting curve with input at converter grid is shown in Fig. 10.
2. Band "B"	465 kc. Sweep	1st I.F. Grid	.05 Mfd.	2nd I.F. Sec. (C-29) Pri. (C-28)	
3. Band "B"	465 kc. Sweep	Converter Grid	.05 Mfd.	1st I.F. Sec. (C-27) Pri. (C-26)	
4. Band "B"	465 kc. Sweep	Converter Grid	.05 Mfd.	3rd I.F. Sec. (C-31)	Disconnect one end of C-57—Turn A.F.C. switch "on"—vertical input of oscilloscope to ground and discriminator cathode; prong no. 4 on 6H6. Adjust trimmer for cross on horizontal axis. Fig. 11.
5. Band "B"	465 kc. Sweep	Antenna Post	250 Mmf. 400 Ohms	Wave Trap Trimmer (C-58)	Adjust for minimum amplitude.

I.F. Alignment with Output Meter

1. Band "B"	465 kc. Modulated	2nd I.F. Grid	.05 Mfd.	3rd I.F. Pri. (C-30)	A.F.C. switch "off"—Condenser gang at minimum capacity output meter connected across the voice coil—volume control at maximum—input as low as practical. Adjust all trimmers in order listed for maximum output. Do not attempt an over-all re-alignment once a stage by stage alignment has been completed.
2. Band "B"	465 kc. Modulated	1st I.F. Grid	.05 Mfd.	2nd I.F. Sec. (C-29) Pri. (C-28)	
3. Band "B"	465 kc. Modulated	Converter Grid	.05 Mfd.	1st I.F. Sec. (C-27) Pri. (C-26)	
4. Band "B"	.....	.....	.....	3rd I.F. Sec. (C-31)	See paragraph on A.F.C. adjustment.
5. Band "B"	465 kc. Modulated	Antenna Post	250 Mmf. 400 Ohms	Wave Trap Trimmer (C-58)	Adjust for minimum output.

R.F. Alignment

1. Band "B"	.....	.....	.....	.....	Turn A.F.C. switch "off"—Set dial pointer to first line at left-hand end of dial scale with condenser gang fully meshed.
2. Band "E"	42 mc. Modulated	Antenna Post	250 Mmf. 400 Ohms	Osc. (C-12) Ant. (C-4)	Connect output meter across voice coil—Turn tone control to bass. "E" band image should be 930 kc *above* input signal when oscillator trimmer (C-12) is peaked properly.
3. Band "D"	18 mc. Modulated	Antenna Post	250 Mmf 400 Ohms	Osc. (C-13) R.F. (C-5) Ant. (C-2)	"D" band image should be 930 kc. *below* input signal when oscillator trimmer (C-13) is peaked properly Example: 15 mc.—image 14.07 mc. Peak C-2 and C-5 while rocking gang condenser.
4. Band "C"	5220 kc. Modulated	Antenna Post	250 Mmf. 400 Ohms	Osc. (C-62)	Adjust trimmer for greatest output with set dial at 5220 kc.
5. Band "B"	1500 kc. Modulated	Antenna Post	250 Mmf. 400 Ohms	Osc. (C-14) R.F. (C-6) Ant. (C-3)	Adjust trimmers, in order listed, for greatest output at 1500 kc.
6. Band "B"	580 kc. Modulated	Antenna Post	250 Mmf. 400 Ohms	Osc. Padder (C-18)	Adjust padder for maximum output in vicinity of 580 kc while rocking gang condenser.
7. Band "B"	Repeat operation No. 5				

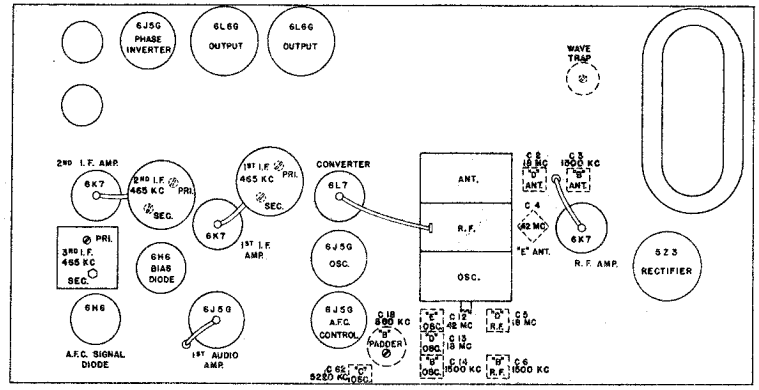

Fig. 9. Chassis Layout and Trimmer Location

ALIGNMENT PROCEDURE

In order to align these receivers properly, it is necessary to have the following test equipment:

1. A modulated test oscillator.
2. An output indicator such as an A-C voltmeter with a scale reading of 3 to 5 volts. A cathode ray oscilloscope is preferred for I.F. alignment.
3. A screw-driver type alignment tool.

The alignment procedure is given in table form along with the trimmer location drawing, Fig. 9. A "dummy antenna" should be used in all alignments and is the capacitor or capacitor and resistor used in series with the signal generator. The grid lead should not be removed from the tube to which the input signal is applied when aligning the I.F. as this would remove the grid bias from the tube.

Automatic Frequency Control Adjustments

After I.F. alignment is completed with output meter, and without disturbing the generator setting, remove the signal generator lead from the grid of the 6L7 converter. Apply the 465 kc. signal to the 6L7 grid capacitively through the insulation of the grid lead.

Tune in a weak broadcast station at about 1000 kc. and, with the A.F.C. switch "off," tune the receiver carefully for "Zero" beat between this carrier and the 465 kc. generator signal. Throw the A.F.C. switch on and adjust the 3rd I.F. secondary trimmer C-31 to zero beat. This adjustment is very critical and must be made with great care. When the alignment is correctly done, there will be no appreciable difference in the beat note with the A.F.C. switch "on" or "off."

Another method of A.F.C. adjustment, after I.F. alignment with an output meter, is to connect a low range voltmeter between the cathodes of the 6H6 discriminator. Leave the signal generator connected to the 6L7 grid and, without disturbing this 465 kc. setting of the signal generator, adjust C-31. It will be noticed that the meter reads plus when C-31 is tuned off resonance on one side and negative when tuned on the opposite side of resonance. The correct adjustment of C-31 is between these positions, when the voltmeter reads zero.

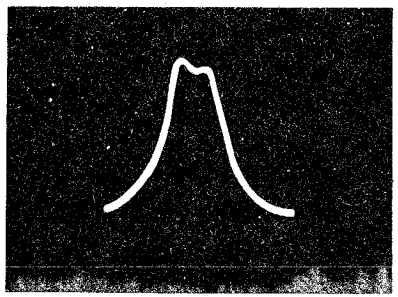

Fig. 10. Over-all I. F. Curve

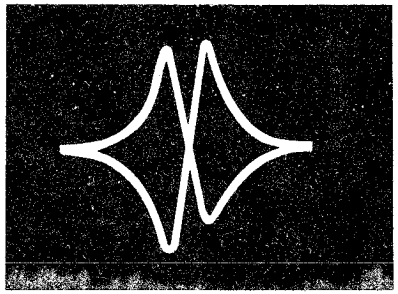

Fig. 11. A.F.C. Adjustment Curve

MODEL F-135
Voltage
Chassis Wiring

GENERAL ELECTRIC CO.

SOCKET VOLTAGES

Tube No.	Plate to Ground Volts D-c	Screen Grid to Ground Volts D-c	Cathode to Ground Volts D-c	Cathode Current M.A.	Heater Volts A-c
6K7 R.F. Amplifier	218	107	0	9.0	6.3
6J5 Oscillator	203	....	0	12.0	6.3
6L7 Converter	218	107	0	4.2	6.3
6J5-G A.F.C. Control	203	....	7.9	10.0	6.3
6K7 1st I.F. Amp.	218	107	4.1	2.0	6.3
6K7 2nd I.F. Amp.	218	102	3.0	9.6	6.3
6J5-G Inverter 6J5-G 1st Audio	95	....	3.2	2.2	6.3
6L6-G Output 6L6-G Output	327	222	17.0	43	6.3
5Z3 Rectifier	670/350 RMS	....	....	152	5.0

A-c line voltage 115 with the fuse clipped to the 115-volt tap—no signal input—1000 ohms per volt meter—dial pointer at 530 kc.

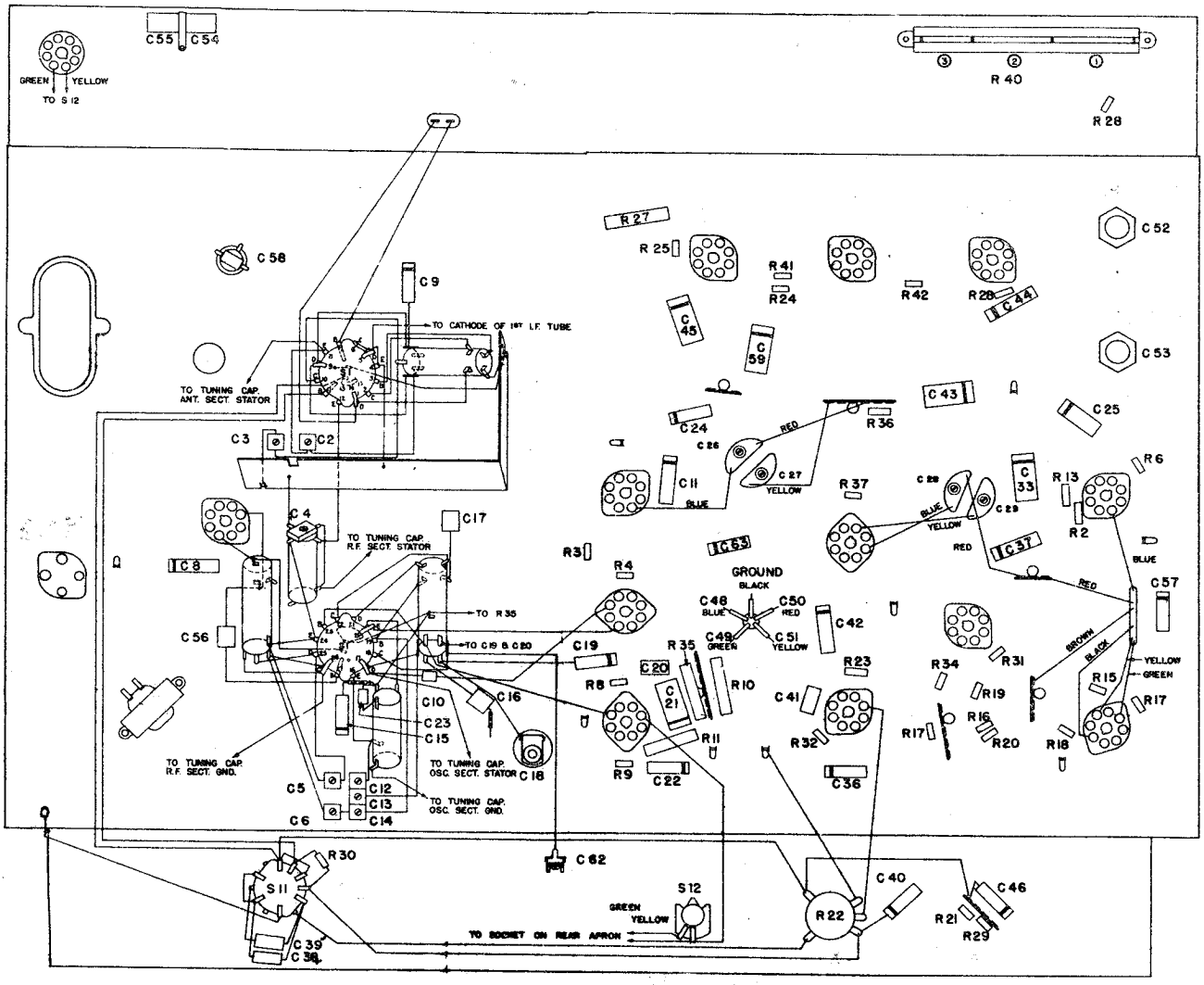

Fig. 8. Chassis Parts Layout

©John F. Rider, Publisher

©John F. Rider, Publisher

SERVICE DATA

Physical Specifications

Model	F-135
Height	43¾ in.
Width	29¼ in.
Depth	15⅛ in.
Weight Packed	123 lbs.
Tuning Control Drive Ratio Manual	90–1

Electrical Specifications

Rating Label	Power Supply (Volts)	Frequency (Cycles)	Power Consumption (Watts)
A	110–120 (120–130)*	50–60	200
C	110–120 (120–130)*	25	210

*The receivers, as shipped from the factory, have the fuse clipped to the 120–130 volt tap of the transformer, marked 125 on the fuse board. If the normal voltage of your power supply is always below 115 volts, the fuse should be removed from this tap and placed in the lower voltage clip marked 115.

Tuning Frequency Range

Band "B"	540–1620 kc.
Band "C"	1620–5600 kc.
Band "D"	5600–18,000 kc.
Band "E"	18,000–43,000 kc.
Intermediate Frequency	465 kc.

Electrical Power Output

Undistorted	15 watts
Maximum	20 watts
Tone Control	5-point control
Loud-speaker—Electrodynamic	
Cone Diameter	12 inch
Voice Coil Impedance	5.5 ohm at 400 cycles

Tubes

R.F. Amplifier	6K7 Triple-grid, super control amplifier
Converter	6L7 Pentagrid, mixer amplifier
Oscillator	6J5-G Detector amplifier triode
A.F.C. Control	6J5-G Detector amplifier triode
1st I.F. Amplifier	6K7 Triple-grid, super control amplifier
2nd I.F. Amplifier	6K7 Triple-grid, super control amplifier
A.F.C. Discriminator and Detector	6H6 Twin diode
Bias and Sensitivity Control	6H6 Twin diode
1st Audio Amplifier	6J5-G Detector amplifier triode
Phase Inverter	6J5-G Detector amplifier triode
Audio Output	6L6-G Beam power amplifier
Audio Output	6L6-G Beam power amplifier
Rectifier	5Z3 Full wave rectifier
Dial Lamps	Mazda No. 46—6.3 volts, 0.25 amps.

GENERAL INFORMATION

The Model F-135 receiver is a four-band a-c operated receiver employing thirteen General Electric Pre-tested Tubes in a superheterodyne circuit. This receiver incorporates automatic "Touch Tuning" with thirteen station buttons, finger-tip dial "Scan" control, R.F. amplifier, two stages of I.F. amplification, five-point tone control, wave trap and other features of design as described in the following paragraphs.

Receiver Operation

The antenna transformer T-6, used in conjunction with a 6K7 tube, and the R.F. transformer T-4 are the essential elements of the R.F. amplifier. The output from the R.F. amplifier and the output from the 6J5-G oscillator tube are combined in the 6L7 oonverter tube to give an output frequency of 465 kc. The 465 kc. signal is then amplified by the I.F. amplifier which consists of three double-tuned transformers and two 6K7 tubes. The primary and secondary coils of these transformers are carefully adjusted midway between the points of critical and overcoupling so as to give the I.F. amplifier a broadened band width with a subsequent better fidelity of the received program.

The output of the I.F. amplifier is applied to a 6H6 diode rectifier, which is a combination detector, automatic volume control, and discriminator voltage source for the automatic frequency control tube. A detailed explanation of the A.F.C. will be found in a following paragraph. A second 6H6 diode is used to supply minimum bias to all tubes controlled by the avc. One of the plates (18) of this diode supplies initial bias to the R.F. stage, while the other plate (19) supplies the 6L7 converter and 1st I.F. amplifier with the proper bias. Since the cathodes of the 6H6 are connected to a 3.2 volt point on the bleeder resistance R-40, this allows the avc controlled tubes to have a constant −3.2 volt bias with no signal input. This bias will remain constant until the point at which the avc voltage developed, becomes greater than this −3.2 volts, at which time the bias on these tubes will then be dependent upon the avc developed by the strength of the carrier. The sensitivity is automatically increased on "C," "D," and "E" bands by a section on the band switch which grounds the cathode of the 6K7 1st I.F. amplifier. This ground removes the self bias which is necessary on "B" band to reduce interstation noise.

The volume is controlled by the variable potentiometer (R-22) in the grid circuit of the 6J5-G 1st audio amplifier tube. This tube is resistance coupled to both the 6L6-G output tube and to the 6J5-G phase inverter tube. The phase inverter tube is used to drive the second 6L6-G output tube 180 degrees out of phase with the first 6L6-G. Engineers have carefully balanced this circuit so that the 6L6-G tubes are operating push-pull into the output transformer which they designed to correctly load these tubes over the entire audio range of frequencies.

This careful balance together with controlled negative feed back enables the two 6L6-G tubes to deliver ample undistorted power output to the twelve-inch electrodynamic speaker.

TONE CONTROL

Negative feed back is used to control the quality and tone of reproduction. The frequency response of the audio circuit is varied by the tone control switch and its associated network as follows:

In the "Normal" position, voltage from the voice coil is fed back through R-29, R-21 and C-46 to a tap on the volume control. The tone control switch S-11 is in No. 1 position and does not make any connection with the circuit. Engineers have carefully chosen the value of R-29 and C-46 so that the negative feed back voltage holds down the "boom" caused by pentode output and speaker resonance. This arrangement improves the quality and response to an external range of both high and low frequencies.

No. 2 is the "Bass" position. The long arm of S-11 (Fig. 7) grounds C-38 thus connecting this capacitor across the volume control and limiting the high frequency input to the audio amplifier. The negative feed back circuit is the same as used in the "Normal" position. The result is the true reproduction of a wide range of low frequencies without the "boom" at speaker resonance.

The "Treble" position is No. 3 where high frequencies are injected into the second tap on the volume control. It should be noted that C-38 is removed from the circuit, and the short arm on S-11 (Fig. 7) connects C-39 across the top part of the volume control thus increasing the higher frequencies present in the lower portion of R-22. The shorting bar of S-11 across No. 2 and No. 3 connects R-30 in parallel with R-21 and C-46. This allows more degeneration of the lower frequencies. The result is improved quality with a nearly flat low frequency response and a very much extended high frequency range.

In the "Foreign" position No. 4 highs are again limited by C-38. The shorting bar across contacts No. 3 and No. 4 shorts out R-21 and C-46 thus leaving only R-29 in the feed back circuit. Because of the limiting of highs by C-38 and more degeneration of lows by the feed back circuit, a middle range response is obtained. This position may be used to reduce noise and to reduce bass response on programs which predominate in low frequency tones.

C-38 is removed from the circuit in the "Speech" position. R-21 and C-46 are shorted out of the feed back circuit. R-29 is left in the circuit to limit the amount of feed back voltage. This arrangement gives improved quality and flat response to the entire audio range of frequencies.

It should be noted that on "C," "D," and "E" bands contacts No. 13, 14, and 15 of the band switch S-1 short out R-21 and C-46 so that the feed back circuit provides flat degeneration at all times. This reduces the possibility of howl on short waves due to excessive vibration of the chassis on low frequency notes.

COIL SYSTEM

The antenna coils for three bands are wound on a single form designated as T-6. The R.F. coils T-4 and the oscillator coils T-5 are constructed on two separate forms. The "E" band antenna and oscillator coils are each supported on separate forms. All contacts on the band switch are numbered in Fig. 7 and Fig. 8 to facilitate tracing the coil circuits.

The band switch connects the coils to operate as follows:

	Primary	Secondary	Remarks
Ant.			
"B"	L-6	L-4 & L-5	
"C"	L-3	L-4	L-5 shorted
"D"	L-2 & L-3	L-1	L-4 & L-5 shorted
"E"	L-22	L-23	Coupled directly to 6L7
R.F.			
"B"	L-11	L-14 & L-15	
"C"	L-11	L-14	L-15 shorted and C-56 connected across L-11, L-14, & L-15 shorted
"D"	L-11	L-10	
"E"	....	....	R.F. 6K7 grid shorted L-10, L-14, & L-15 shorted
Osc.			
"B"	L-21	L-20	
"C"	L-19	L-18	Connects B+ lead to L-20
"D"	L-17	L-16	Connects B+ lead to L-18 & L-20
"E"	L-24 & L-26	L-25	Connects B+ lead to L-16, L-18, & L-20

On "D" band contact, No. 7 is used to provide a ground for the General Electric noise reducing antenna systems KV-300 and FT-40. Contacts No. 4, 5, and 6 short out R-37 on "C," "D," and "E" bands. This removes the self bias from the 6K7 1st I.F. amplifier and thus increases the sensitivity of the receiver on short wave bands.

Contacts No. 13, 14, and 15 short out the selective portion of the negative feed back circuit as explained under tone control.

DIAL MECHANISM

(A) Manual drive leather faced bevel gear
(B) Beveled idler gear
(C) Tuning shaft gear
(D) Volume control drive cord pulley
(E) Band switch drive cord pulley
(F) Tone control drive cord pulley
(G) Belt driven spiral rod drive pulley
(1) Spiral drive rod rider
(2) Pointer slider guide rod
(3) Tuning pointer spiral drive rod
(4) Motor belt
(5) Spiral rod bracket with bearing
(6) Motor shaft collar
(7) Clutch tension spring
(8) Pulley dog
(9) Motor shaft collar
(10 Tone control pointer
(11) Tone control cord pulley-stud
(12) Band switch indicator
(13) Band switch indicator cord pulley-stud
(14) Long dial drive cord
(15) Dial scale pointer
(16) Volume control pointer
(19) Short dial drive cord
(20 Stationary spring support } Fig. 4
(23) Relay armature extension } Fig. 4
(24) Armature back stop } Fig. 4

Tuning mechanism diagram (Fig. 1) is self-explanatory. The tuning condenser drive cord can be easily replaced without removing *any* part of the chassis while all dial indicating control cords are made readily accessible for servicing by merely removing the seven small screws holding the dial reflector assembly.

AUTOMATIC FREQUENCY CONTROL

The Automatic Frequency Control used in this receiver shifts the oscillator frequency so that the correct intermediate frequency is always produced.

The essential elements are the discriminator-transformer T-9, the twin diode 6H6 with its balanced discriminator network, and the 6J5-G control tube connected across the broadcast oscillator plate coil.

The discriminator transformer is designed to deliver (when properly tuned to 465 kc.) equal voltages to each section of the 6H6. Under this condition the voltage drop across R-15 is equal and opposite to the voltage across the

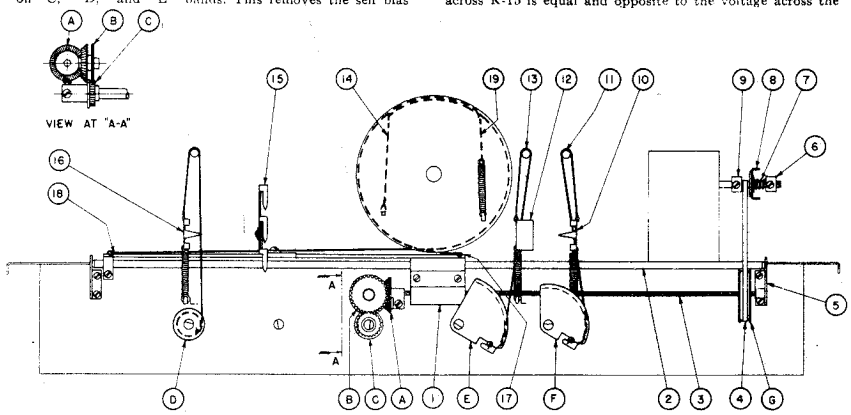

Fig. 1. Dial Mechanism

©John F. Rider, Publisher

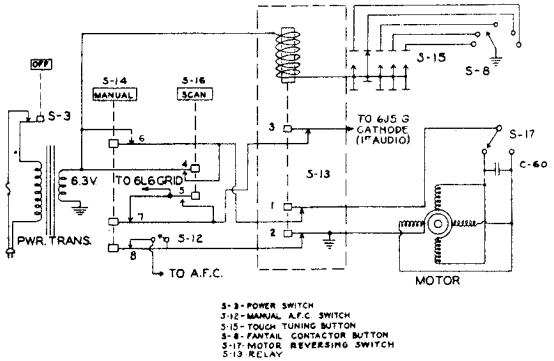

Fig. 2. Schematic of "Touch Tuning" System

total resistance of R-16, R-17, and R-18, thus no discriminator voltage is produced to control the 6J5-G tube.

However, if the signal frequency is increased above 465 kc. unequal voltages are applied to the diodes, and the voltage over R-15 is greater than the voltage over the combined resistance of R-16, R-17, and R-18. The difference of these two voltages is positive and is applied to the 6J5-G control tube.

When the signal frequency is decreased below 465 kc. the result is less voltage over R-15 and a greater voltage over the combined resistances R-16, R-17, and R-18. The difference of these two voltages, as applied to the 6J5-G control tube, is negative.

Thus three conditions arise:

On resonance, no discriminator voltage developed
Above 465 kc., a positive control voltage
Below 465 kc., a negative control voltage

The 6J5-G A.F.C. control tube has a combination of self and fixed bias, the latter being the result of the current supplied through R-10 and R-11 to the cathode resistor R-9. The R.F. voltage applied to the control grid of the 6J5-G is obtained from the drop across the C-18 series padder and C-19. The vector sum of these two voltages is applied to the phase-shifting network C-20 and R-8 and in turn to the control grid. This phase-shifting network causes the control tube to appear as a reactance in parallel with the oscillator coil. The value of the apparent reactance depends upon the control voltage produced by the discriminator.

When the set is mistuned above the incoming signal the converter output is above the 465 kc. required. A positive discriminator voltage is produced as explained above. This causes the 6J5-G tube to act as more capacitive reactance and thus lowers the oscillator frequency; this gives a lower converter output frequency, approximately 465 kc.

When the set is mistuned below the incoming signal, the converter output is below the 465 kc. required. A negative discriminator voltage is produced as explained above. This causes the 6J5-G to act as less capacitive reactance thus increasing the oscillator frequency. This in turn gives a higher converter output frequency approximately 465 kc.

TOUCH TUNING

"General Electric Touch Tuning" consists of three essential units: the push-button assembly of sixteen buttons, used by the operator for control; the motor and relay assembly, operating in conjunction with the buttons to provide fast and accurate tuning; and the contact segment with its sliding contactor and adjustable contacts enabling selection of thirteen different stations to be tuned automatically.

Of the sixteen push-buttons, thirteen are used for station selection. The other buttons are used for "Manual" control (No. 8), "Scanning" (No. 15), and "Off" (No. 16). Depression of any button except No. 15 will lock the depressed button and release any other that may be in circuit. Thus the selection of any station button or of "Manual" will release the "Off" switch, turning the set on.

The tuning motor is operated as a capacitor type squirrel-cage induction motor, with capacitor C-60 as the phase-shifting device. By tracing the motor circuit it will be seen that C-60 is in series with one set of poles when the motor reversing switch is in the position shown in Fig. 2. When the switch S-17 is reversed, the capacitor C-60 is in series with the opposite set of poles. This causes the motor field to rotate in the opposite direction with the resultant change in motor rotation.

The motor power is supplied from the tube heater circuit through "Manual" switch (contact No. 6), the relay (contact No. 1) and the motor reversing switch (S-17) with the chassis as common return. It will continue to run until the sliding contactor (S-8) contacts the stud on the contact segment which is connected to the button in circuit. When this contact is made, the relay field coil is energized, causing the relay to open the motor circuit (contact No. 1). At the same time, the relay arm also engages the motor clutch, causing instantaneous stopping of tuning mechanism travel. Depression of another station button causes another similar cycle.

Pressing the "Manual" button (No. 8) releases any depressed button. Thus S-15 is opened and the relay field coil can not be energized. Contact No. 6 opens the motor circuit.

With the receiver set for "Manual" operation, depression of the "Scan" button closes the motor circuit by the shunting of contact No. 6 on the "Manual" switch, allowing continuous motor operation and dial travel. As the motor drives to the dial limits on either end, S-17 is automatically thrown causing reversal of motor rotation.

During periods of motor operation, either for automatic station selection or for scanning, the grid of the 6L6-G is shorted to the common cathode connection of the first audio and phase inverter tubes. This "silent tuning," accomplished by relay contact No. 3 in the former case, or scan button contact No. 5 in the latter, avoids reception of unwanted stations or interstation noise when tuning automatically or by means of the "Scan" button.

The use of automatic frequency control on "Manual" is made optional by the A.F.C. switch. When any one of the thirteen "Touch Tuning" buttons is depressed, circuit is made through contact No. 8 on S-14 and is completed through relay contact No. 2, thus removing A.F.C. while the motor is in operation. When the station is reached, the relay opens contact thus removing the ground on the A.F.C. circuit. *The A.F.C. is automatically turned on when "touch tuning" is being used.*

REMOTE CONTROL

There are ten leads in the "Remote Touch Tuning Control" cable. These leads serve the following functions:

The No. 1 and No. 2 leads are connected to the octal base adapter and serve to connect the silencing button to the output tube.

The No. 3 to No. 9 leads correspond to the button numbers and, with the No. 10 lead, provide the selection of stations from the remote control unit. These leads are to be connected to pins on the contact segment on the rear of the chassis.

Remove the least desirable station's letters from one of the "Touch Tuning" buttons of the receiver and insert the "Remote" tab. Note the number of this button as marked on the escutcheon.

Remove from a pin on the contact segment on the receiver, the lead which bears this number, and connect it to the No. 10 lead from the remote control cable, Fig. 3.

(The pin on the contact segment from which this lead was removed is left vacant.)

Now note the number of a receiver push button which bears the same call letters as a remote unit button. Remove the lead with this number from the pin on the contact segment. Connect to this pin the lead from the remote cable which corresponds to the above-mentioned remote unit button. Fasten the lead with a hex nut and tighten lightly with a pair of pliers or small wrench. Now reconnect the original lead to the pin. Proceed in the same manner until the seven remote button leads are connected.

There are three glass tubes in a row along the back of this receiver. Remove the center one of these tubes which is a 6L6-G and place the adapter in the socket. Insert the 6L6-G in the adapter.

When the "Remote Touch Tuning Control" unit is connected, as explained above, the action is identical with that of the regular station selection circuit. The remote button unit is in series with the "Remote" button lead on the receiver through lead No. 10 of the remote unit cable. The relay field coil circuit is completed through the set "Remote" button (S-15); the common (No. 10) lead; the depressed control button; its lead to a pin on the contact segment, and to ground through the sliding contactor. *The "silent" button must be in the released position when operating the receiver from either the remote control unit or from the receiver controls, otherwise no audio output will be obtained.*

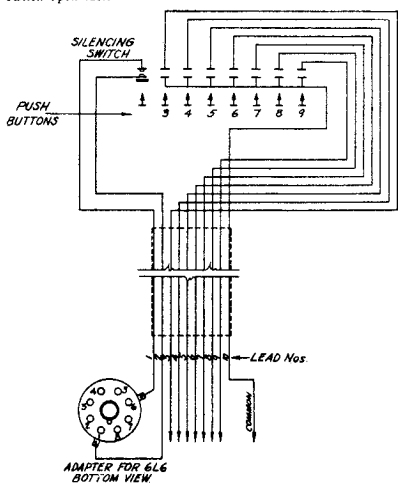

Fig. 3. Schematic of Remote Control

RELAY ADJUSTMENTS

The following adjustments should be made with relay assembled on the motor bracket, Fig. 4.

(1) Make sure contacts are adjusted to open in correct sequence: center contacts (motor) first, contacts furthest from armature (AFC) second, contacts nearest armature (silent tuning) last. *It is very important that the silent tuning switch open last.*

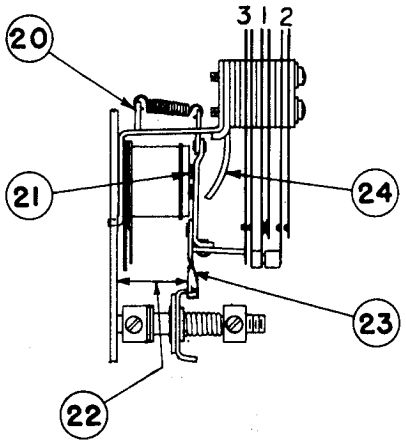

Fig. 4. Relay

(2) Adjust backstop (24) so that the armature snaps closed when the relay coil is energized with 4.5 volts A.C. The backstop must make a positive contact with the back of the armature in the open position; otherwise sluggish operation of the relay will result which will cause the motor drive to skip buttons. If the relay will not close at 4.5 volts and still maintain proper travel and sequence, weaken the spring on the rear of the armature plate by bending the stationary spring support (20).

(3) Loosen the setscrew on the motor shaft collar nearest motor (9) and adjust collar so that the pulley dog (8) misses the relay armature extension by .001 in. (relay not energized). All contacts must be closed when the relay armature touches the end of the motor dog; if the motor contacts open in this position, the armature will chatter.

(4) Spring adjustment (7) on slip clutch should be just tight enough so as not to allow slippage when driving the dial mechanism. Loosen setscrew on outside shaft collar (6) and screw the collar on the shaft to tighten slip clutch.

(5) The pole piece of the relay coil is divided in two semi-circles. The relay armature should only touch the pole segments towards the motor shaft. There should be a .001 in. clearance between the back segment (21) and the armature when closed; otherwise a buzzing will be heard. Sometimes a front pole segment that is not perfectly flat will cause the same trouble. File off the offending bump.

(6) Backstop setting should be such that the distance (22) is 26/32 in. with the relay closed and 29/32 in. with the relay open.

(7) Spacing between relay contact points when open should be .015 to .018 inches for contact No. 1, and .008 to .010 inches for contact No. 2 and No. 3.

INCORRECT OPERATION AND SUGGESTED REMEDIES

Skipping of Stations

(a) "Touch Tuning" buttons' leads not making good contact to adjustable contact pins. Clean contacts and reinsert.

(b) Sliding contactor blade either covered by thin piece of bakelite or dirty. Carefully run fine file over top of sliding contactor, making sure not to leave any sharp corners. Sliding contactor should have small amount of vaseline on beveled surface to prevent chattering.

(c) Nipple too sharp on adjustable contacts will cause sliding contactor blade to jump across. Smooth off with fine sandpaper.

(d) Relay armature out of adjustment causing sluggish operation of relay switch. See paragraph 2 under Relay Adjustments.

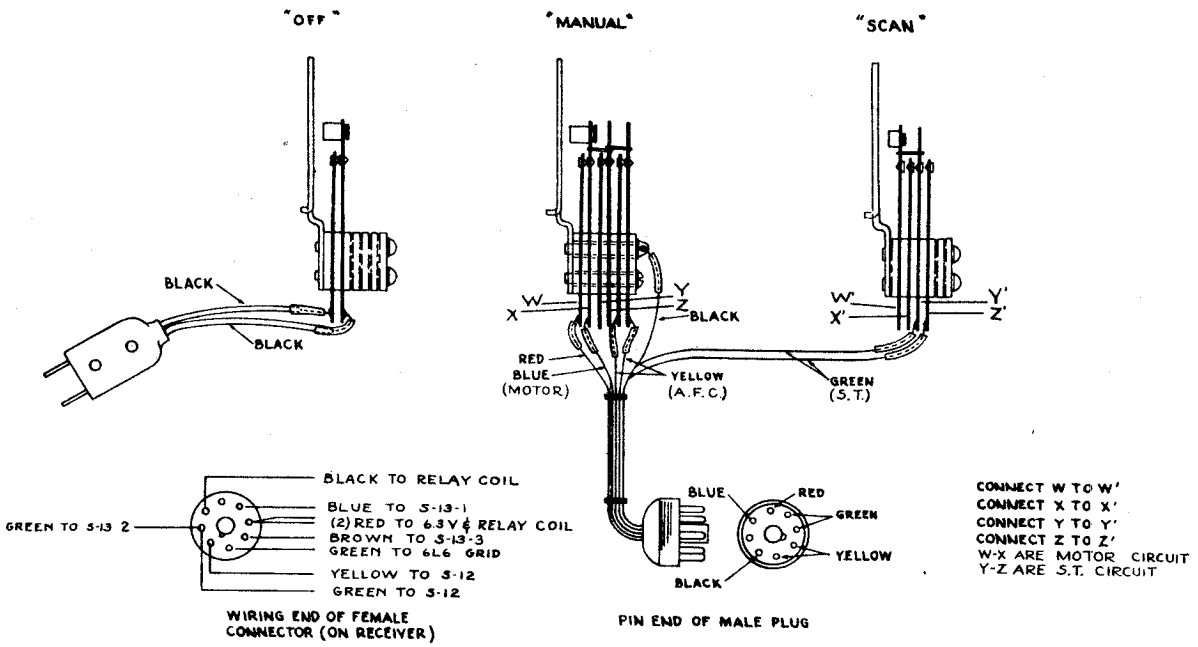

Fig. 5. Wiring Diagram of "Off," "Manual," and "Scan"

(e) Excessive side play in sliding contactor. Loosen the setscrew on the back of the sliding contactor and slide holder together. Final adjustment should allow sliding contactor to rock freely.

(f) Not enough tension on sliding contactor arm. Loosen collar on shaft in rear of contact segment and move sliding contactor arm towards the contactor segment; then tighten collar on shaft.

(g) If the contacts at the rear of the "Touch Tuning" button assembly shafts do not close or make good contact, the motor will continue to scan the dial without stopping at the desired station.

(h) Contact segment may be bent out of shape. This should be perpendicular to chassis deck and parallel to rear chassis apron in order to allow the contactor arm to wipe the adjustable contacts evenly.

No Action When Station Button Is Pressed

(a) Relay remains energized and audio continues to function—push-button escutcheon grounded. Be sure dial and push-button escutcheons are insulated from each other or from the control shafts.

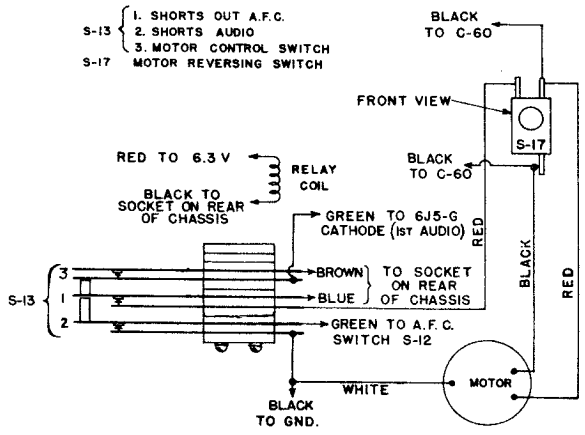

Fig. 6. Motor Relay Wiring Diagram

(b) "Off" switch contacts do not close.

(c) If set does not tune automatically unless scan button is also depressed, contacts No. 6, Fig. 2, require closer spacing.

(d) Open or shorted motor capacitor—Characterized by motor armature humming but no torque. Replace 1000 mfd. capacitor C-60.

(e) Open or shorted coil in motor—Characterized by no torque or low torque in one direction. Replace motor or repair coil.

(f) Drive mechanism bound, or too tight for motor to drive.

(g) Not enough friction in Slip Pulley—The friction of the slip pulley is adjusted by tightening the collar on the end of the motor shaft. Care should be exercised that the setscrew does not hit the relay armature.

(h) Belt slippage—The tension of the belt may be increased by raising the motor on the relay bracket. If the belt still slips, reverse belt and use other surface or use belt dressing.

Miscellaneous Adjustments

(a) When a "Touch Tuning" button will not remain in a locked position, it usually indicates that the springs at each end of the latch bar are not in proper adjustment. They should exert an equal pull on each end.

(b) The fork on the tuning condenser should be adjusted so that the motor reversing switch clicks over when the pointer approximately reaches the 540 and 1620 kc. markings on the dial scale. With the pointer at the extreme end of calibrations when tuning manually, the reversing switch lever should be set so there is not more than 1/16 inch nor less than 1/32 in. clearance between the lever and the switch trigger after the switch has snapped.

(c) The motor and relay mounting plate should rest parallel to the chassis deck. Do not adjust the spring tension foot; raise or lower motor on bracket, as required. Make sure that there is no electrical connection between the motor frame and the chassis.

(d) The "Off" switch on the "Touch Tuning" assembly should stay closed for at least one-half the movement of the key, opening only on the final click. If firm contact does not exist between the points, vibration of the set may cause an intermittent noise.

(e) The silent tuning contacts of the "Manual" and "Scan" switches should open last to permit quiet operation.

©John F. Rider, Publisher

GENERAL ELECTRIC CO.

REPLACEMENT PARTS LIST

MODEL F-135

Insist on genuine factory-tested parts which may be purchased from authorized dealers.

Stock No.	Description	List Price
	RECEIVER CHASSIS ASSEMBLY	
*RB-008	BOARD—2 lug terminal board	$0.10
RB-013	BOARD—1 lug terminal board	.10
*RB-023	BOARD—4 lug terminal board	.10
RB-046	BOARD—5 lug terminal board	.15
*RB-049	BOARD—Ant. and ground terminal board	.10
*RB-053	BOARD—3 lug terminal board	.10
RB-063	BOARD—Fuse terminal board and bracket	.25
*RC-023	CAPACITOR—.005 mfd. 600 V. paper (C-19)	.25
*RC-042	CAPACITOR—.01 mfd., 1000 V. paper (C-40)	.30
*RC-045	CAPACITOR—.015 mfd., 1500 V. paper (C-45, C-59)	.25
RC-083	CAPACITOR—.03 mfd., 400 V. paper (C-42, C-44)	.25
*RC-091	CAPACITOR—.05 mfd., 400 V. paper (C-8, C-9, C-15, C-22, C-24 C-25, C-36, C-37, C-57, C-63)	.30
RC-093	CAPACITOR—.06 mfd., 200 V. paper (C-46)	.25
*RC-123	CAPACITOR—.1 mfd., 400 V. paper (C-11, C-21, C-33, C-43)	.35
*RC-150	CAPACITOR—.25 mfd., 400 V. paper (C-37)	.35
RC-206	CAPACITOR—50 mmf., mica, special for osc.	.35
*RC-213	CAPACITOR—50 mmf., mica (C-34)	.25
*RC-214	CAPACITOR—40 mmf., mica (C-23)	.25
RC-215	CAPACITOR—65 mmf., mica (C-56)	.25
RC-234	CAPACITOR—100 mmf., mica (C-39)	.25
*RC-242	CAPACITOR—150 mmf., mica (C-32, C-35)	.25
*RC-259	CAPACITOR—250 mmf., mica (C-20, C-41)	.30
*RC-296	CAPACITOR—500 mmf., mica (C-7, C-38)	.25
RC-308	CAPACITOR—750 mmf., mica (C-30)	.35
*RC-344	CAPACITOR—1300 mmf., mica (C-17)	.35
RC-368	CAPACITOR—3000 mmf., mica (C-16)	$0.35
RC-427	CAPACITOR—16 mfd., 450 V. wet electrolytic (C-53)	1.05
RC-429	CAPACITOR—30 mfd., 450 V. wet electrolytic (C-52)	1.35
RC-580	CAPACITOR—10 mfd., 25 V.; 4 mfd., 300 V.; 16 mfd., 400 V.; 50 mfd., 6 V. dry electrolytic (C-48, C-49, C-50, C-51)	1.75
RC-583	CAPACITOR—1000 mfd., 12 V. A.C. dry electrolytic (C-60) for 50-60-cycle sets	2.45
RC-588	CAPACITOR—2300 mfd., 12 V. A.C. dry electrolytic (C-61) for 25-cycle sets	4.50
RC-645	CAPACITOR—"C" band oscillator trimmer (2.15 mmf.) (C-62)	.15
RC-650	CAPACITOR—Double trimmers (5-40 mmf.) (C-2, C-3)	.25
RC-651	CAPACITOR—Double trimmers (2-20 mmf.) (C-5, C-6)	.25
RC-654	CAPACITOR—Double trimmers, pri. and sec., 1st or 2nd I.F. transformer (C-26, C-27, C-28, C-29)	.45
RC-655	CAPACITOR—Double trimmers, pri. and sec., 3rd I.F. transformer (C-30, C-31)	1.55
RC-660	CAPACITOR—"E" band ant. trimmer (50-120 mmf.) (C-4)	.20
RC-661	CAPACITOR—Triple trimmer (C-12, C-13, C-14)	.60
RC-662	CAPACITOR—"B" band padder (140-280 mmf.) (C-18)	.25
RC-719	CONDENSER—3-gang tuning condenser (C-1)	5.15
*RC-755	CAPACITOR—Line capacitor .01-.01 mfd., 250 V. A.C. (C-54, C-55)	.40
*RC-863	CORD—Power cord with plug	.65
*RC-992	CUSHION—Condenser mtg. cushion assembly (Pkg. of 5)	.15
RC-8015	CABLE—Speaker cable with female plug	.60
RC-8028	CARDS—Station letter cards (set)	.35
*RF-301	FUSE—3 amp. fuse (Pkg. of 10)	1.00
*RG-001	GRID CAP—Control grid cap (Pkg. of 5)	.10
RK-017	KNOB—Volume and tone control knobs (Pkg. of 5)	.40
RK-018	KNOB—Band and A.F.C. switch knobs (Pkg. of 5)	$0.40
RK-021	KNOB—Manual tuning knob (Pkg. of 5)	.50
RL-050	COIL—Ant. coil "B," "C," and "D" bands (T-6)	1.40
RL-051	COIL—Ant. coil "E" band (L-22 and L-23)	1.10
RL-138	COIL—R.F. coil "B," "C," and "D" bands (T-4)	1.05
RL-254	COIL—Osc. coil "B," "C," and "D" bands (T-5)	1.60
RL-255	COIL—Osc. coil "E" band (L-24, L-26 and L-26)	1.05
RL-334	REACTOR—Filter choke (L-8)	1.40
RP-078	PLATE—Fuse cover plate	.10
RQ-1243	RESISTOR—220 ohm, ½ watt carbon (R-3) (Pkg. of 5)	.70
RQ-1247	RESISTOR—330 ohm, ½ watt carbon (R-6, R-8) (Pkg. of 5)	.70
RQ-1255	RESISTOR—680 ohm, ½ watt carbon (R-32) (Pkg. of 5)	.70
RQ-1257	RESISTOR—820 ohm, ½ watt carbon (R-9) (Pkg. of 5)	.70
RQ-1259	RESISTOR—1000 ohm, ½ watt carbon (R-41, R-42) (Pkg. of 5)	.70
RQ-1269	RESISTOR—2700 ohm, ½ watt carbon (R-37) (Pkg. of 5)	.70
RQ-1271	RESISTOR—3300 ohm, ½ watt carbon (R-13, R-36) (Pkg. of 5)	.70
RQ-1275	RESISTOR—4700 ohm, ½ watt carbon (R-29) (Pkg. of 5)	.70
RQ-1281	RESISTOR—8200 ohm, ½ watt carbon (R-25) (Pkg. of 5)	.70
RQ-1291	RESISTOR—22,000 ohm, ½ watt carbon (R-30) (Pkg. of 5)	.70
RQ-1299	RESISTOR—47,000 ohm, ½ watt carbon (R-4, R-14) (Pkg. of 5)	.70
RQ-1303	RESISTOR—68,000 ohm, ½ watt carbon (R-2, R-23, R-26) (Pkg. of 5)	.70
RQ-1307	RESISTOR—100,000 ohm, ½ watt carbon (R-18, R-31, R-33) (Pkg. of 5)	.70
RQ-1309	RESISTOR—120,000 ohm, ½ watt carbon (R-24, R-28) (Pkg. of 5)	.70
RQ-1313	RESISTOR—180,000 ohm, ½ watt carbon (R-16, R-21) (Pkg. of 5)	.70
RQ-1315	RESISTOR—220,000 ohm, ½ watt carbon (R-1, R-17) (Pkg. of 5)	.70
RQ-1317	RESISTOR—270,000 ohm, ½ watt carbon (R-20) (Pkg. of 5)	.70
RQ-1323	RESISTOR—470,000 ohm, ½ watt carbon (R-7) (Pkg. of 5)	.70
RQ-1324	RESISTOR—510,000 ohm, ½ watt carbon (R-15) (Pkg. of 5)	.70
RQ-1331	RESISTOR—1 megohm, ½ watt carbon (R-5, R-34) (Pkg. of 5)	.70
RQ-1339	RESISTOR—2.2 megohm, ½ watt carbon (R-19) (Pkg. of 5)	.70
RQ-1471	RESISTOR—3300 ohm, 1 watt carbon (R-10, R-35)	.20
*RQ-1499	RESISTOR—47,000 ohm, 1 watt carbon (R-11)	.20
RR-732	RESISTOR—Tapped bleeder resistor (R-40)	.60
RR-1004	RESISTOR—230 ohm, 1½ watt moulded (R-30)	.15
*RS-139	SHIELD—3rd I.F. transformer shield	.20
RS-175	SHIELD—1st or 2nd I.F. transformer shield	.25
*RS-200	SOCKET—8 pin tube socket (Pkg. of 5)	.75
RS-217	SOCKET—4 prong tube socket (Pkg. of 5)	.50
RS-221	SOCKET—8 pin socket (push-button control cable receptacle) (Pkg. of 5)	.60
RS-223	SOCKET—8 pin socket for osc. and converter (Pkg. of 5)	.80
RS-356	SWITCH—Manual A.F.C. switch (S-5)	.40
RS-368	SWITCH—Tone control switch (S-11)	$0.70
RS-369	SWITCH—Band change switch (S-1 to S-10)	2.85
RT-134	TRANSFORMER—Power transformer 110-130 V.; 50-60 cycles (T-1)	8.50
RT-135	TRANSFORMER—Power transformer 110-130 V.; 25-60 cycles (T-1)	13.95
RT-246	TRANSFORMER—1st or 2nd I.F. transformer (complete) (T-7, T-8)	1.80
RT-247	TRANSFORMER—3rd I.F. transformer (complete) (T-9)	3.95
RV-033	VOLUME CONTROL—2 megohm, volume control, tap at 5000 ohms and 500,000 ohms (R-22)	1.05
*RW-101	WASHER—Felt washer for knobs (Pkg. of 10)	.45
RW-404	WAVE TRAP—Wave trap complete	.70
RX-027	ASSEMBLY—Chassis mounting assembly	.15
	DIAL SCALE ASSEMBLY	
RC-868	CORD—Band indicator, tone control and volume control pointer cord (Pkg. of 5)	.60
RC-8012	CABLE—Tuning drive cables (Pkg. of 5 pairs)	.55
RD-054	DRUM—Condenser drive drum	.30
RD-059	DIAL—Dial scale assembly	3.70
RE-017	ESCUTCHEON—Dial escutcheon plate complete	1.95
RL-920	LAMP—Dial lamp 6.3 volt .25 amp. (Pkg. of 10)	1.50
RP-079	PULLEY—Volume control cord drive pulley	.15
RP-080	POINTER—Volume or tone control pointer (Pkg. of 5)	.15
RP-083	PULLEY—Band switch cord drive pulley	.10
RP-084	PULLEY—Tone control cord drive pulley	.10
RP-089	POINTER—Dial scale pointer (includes support) (Pkg. of 5)	.60
RP-090	POINTER—Band change indicator (Pkg. of 5)	.90
RR-911	REFLECTOR—Lamp reflector	.75
RS-222	SOCKET—Lamp socket assembly	.45
*RS-401	SPRING—Tuning drive cord tension spring (Pkg. of 2)	.20
RS-427	SPRING—Volume, tone or band indicator cord tension spring (Pkg. of 5)	.20
RW-016	WINDOW—Escutcheon window and cushion	.30
	AUTOMATIC DRIVE AND MOTOR ASSEMBLY	
RA-404	ARM—Motor reversing switch arm (on gang condenser shaft)	.15
RB-156	BRACKET—Guide and spiral rod bracket, includes bearing (motor end)	.10
RB-157	BRACKET—Spiral rod bracket with bearing (manual tuning end)	.10
RB-605	BELT—Motor belt	.25
RG-010	GEAR—Manual drive beveled idler and tuning shaft gear	.40
RG-011	GEAR—Manual drive leather faced bevel gear	.20
RM-104	MOTOR—25-cycle automatic tuning motor (motor only)	4.45
RM-105	MOTOR—50-60-cycle automatic tuning motor (motor only)	4.05
RP-085	PULLEY—Spiral drive rod pulley (belt driven)	.15
RR-912	RIDER—Spiral drive rod rider	.30
RR-913	ROD—Pointer slider guide rod	.15
RR-914	SPIRAL ROD—Tuning, pointer spiral drive rod	.25
RR-915	RELAY—50-60-cycle relay (complete)	$2.85
RR-917	RELAY—25-cycle relay (complete)	3.10
RS-359	SWITCH—Tuning motor reversing switch (Operated by gang cond. shaft) (S-17)	.70
RS-429	SPRING—Motor relay armature spring (Pkg. of 2)	.20
RS-505	SLIDER—Dial pointer slider assembly	.70
RS-908	SHAFT—Manual tuning shaft (shaft only)	.05
RX-028	ASSEMBLY—Motor clutch assembly (complete)	.30
RX-029	ASSEMBLY—Drive motor mounting cushions and screws	.15
	STATION SELECTOR ASSEMBLY (Behind Tuning Condenser)	
RC-1962	COLLAR—Contactor shaft collar	.10
RC-1963	SLIDING CONTACTOR—Bakelite mounted rotating contactor and holder	.40
RC-1964	CONTACT—Thumbscrew contact (complete) (Pkg. of 10)	.95
RI-103	INSULATORS—Insulators and washers (thumbscrew contact) (Pkg. of 10)	.05
RP-067	PLATE—Contactor mounting segment	.55
RU-002	COUPLING UNIT—Flexible coupling with contactor arm	.75
RW-106	WICK—Wick assembly (Pkg. of 5)	.50
	PUSH BUTTON AUTOMATIC TUNING MECHANISM	
RB-064	2 TERMINAL BOARDS—Terminal strips (7 terminals)	.40
RB-065	TERMINAL BOARD—Terminal strip (6 terminals) (long)	.20
RB-068	TERMINAL BOARD—Terminal strip (short) (6 terminals)	.20
RB-606	LATCH BAR—Push button mechanism latch bar	.10
RB-607	BUTTON—Molded push button (Pkg. of 5)	.20
RC-1965	CLAMP—Push button cable clamp (Pkg. of 10)	.10
RC-1966	CONTACTOR CLIP—Clip and insulator (on leads from terminal strip) (Pkg. of 5)	.15
RC-8013	CABLE—"Off," "Manual," "Scan" switch cable with plug	.65
RE-018	ESCUTCHEON—Touch tuning button escutcheon plate	1.50
RI-104	INSULATOR—Insulator between key and switch blade (manual and off switches) (Pkg. of 5)	.15
RI-105	INSULATOR—Insulator between key and switch blade (scan switch) (Pkg. of 5)	.10
RI-107	INSULATOR—Escutcheon separating insulators (Pkg. of 10)	$0.05
RK-200	KEY—Push button key (Pkg. of 5)	.15
*RP-026	PLUG—A.C. line connector female plug	.45
*RP-027	PLUG—A.C. line connector male plug	.45
RS-361	SWITCH—Tuning control switch (3 section) "Off," "Manual," "Scan" (complete) (S-14, S-16)	1.10
RS-430	SPRING—Latch bar spring (Pkg. of 5)	.10
RS-431	SPRING—Key spring and staple (Pkg. of 5)	.05
RS-506	SPACER—Contact point spacer (fiber) (Pkg. of 10)	.05
RW-017	WINDOW—Push button celluloid window (Pkg. of 25)	.10
RW-105	WASHER—Fiber washer on push button key (Pkg. of 10)	.05
RX-031	ASSEMBLY—Push button assembly (complete)	9.50
	SPEAKER ASSEMBLY	
RC-925	CONE—Cone and voice coil	1.25
*RC-991	CLAMP—Cone spider clamp and screw	.05
RP-058	PLUG—Speaker plug	.20
RS-062	SPEAKER—12-in. type speaker (complete)	8.30
*RS-416	SPRING—Voice coil leads spring (Pkg. of 2)	.10
RT-431	TRANSFORMER—Output transformer (T-2)	2.30
RX-030	ASSEMBLY—Speaker mounting bushings and nuts	.10
	REMOTE CONTROL UNIT	
RA-551	ADAPTER—Adapter socket	.75
RB-075	BOARD—Terminal board (9 terminals) (top)	.25
RB-076	BOARD—Terminal board (9 terminals) (bottom)	.25
RB-607	BUTTON—Moulded push button (Pkg. of 5)	.20
RB-608	LATCH BAR—Latch bar for keys	.10
RC-1970	CLAMP—Remote cable clamp	.05
RC-8023	CABLE—Flat cable (10 leads)	6.90
RK-201	KEY—Push button key	.10
RK-202	KEY—Push button key (silent)	.10
RS-430	SPRING—Latch bar spring (Pkg. of 5)	.10
RS-431	SPRING—Key spring and spacer (Pkg. of 5)	.10
RT-950	TERMINAL—Terminal for No. 10 lead (Pkg. of 5)	.05
RT-951	TERMINAL—Terminal on leads No. 1 to No. 9 and rubber insulator (Pkg. of 5)	.05
RW-017	WINDOW—Push button celluloid window (Pkg. of 25)	.10

* Used on previous receivers. (Prices subject to change without notice.)

©John F. Rider, Publisher

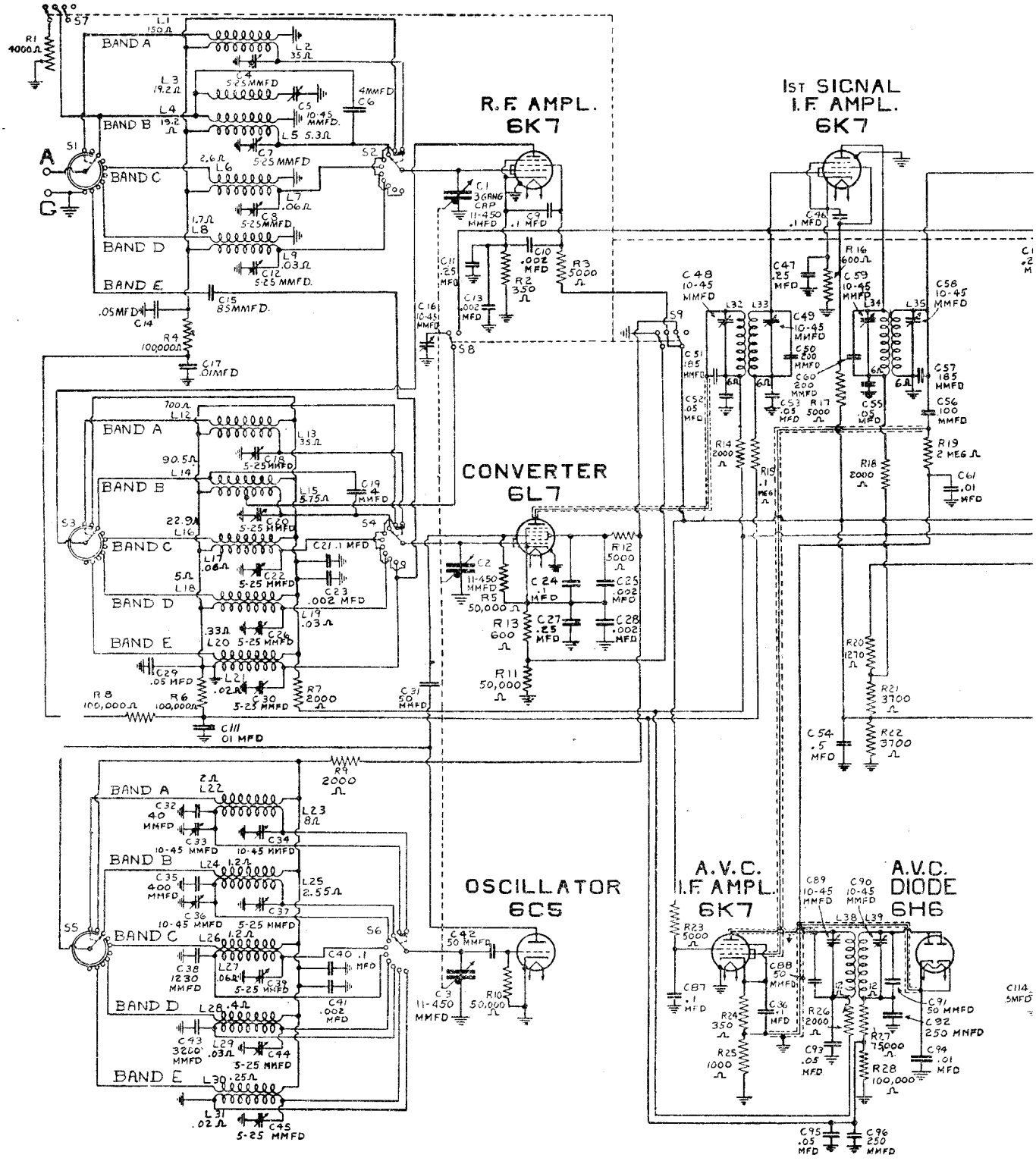

Fig. 2. Model A-205 Schem

©John F. Rider, Publisher

ELECTRIC CO.

MODEL A-205
Schematic

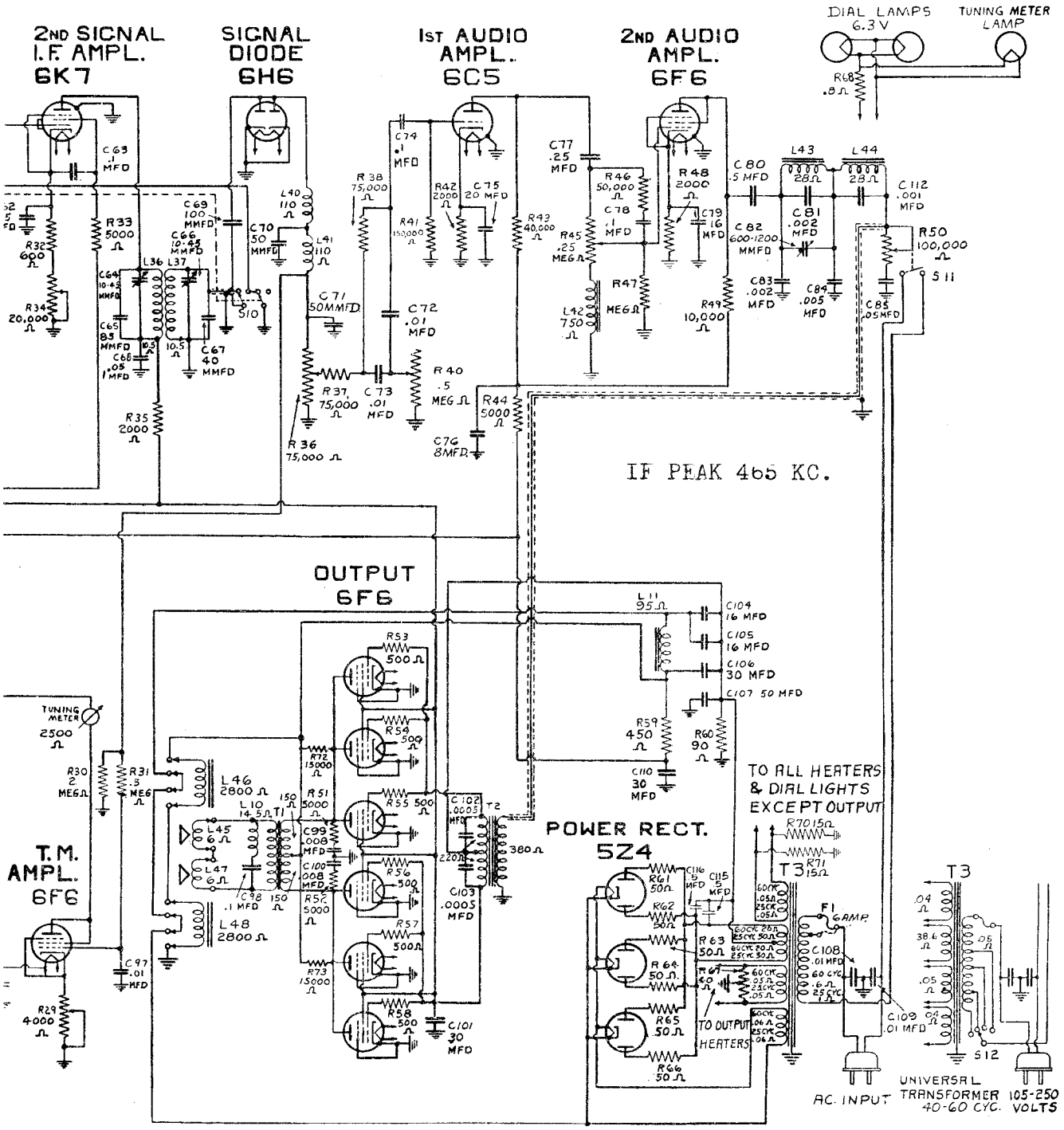

atic Circuit Diagram

GENERAL ELECTRIC CO.

MODEL A-205
Chassis Wiring
Coil Data

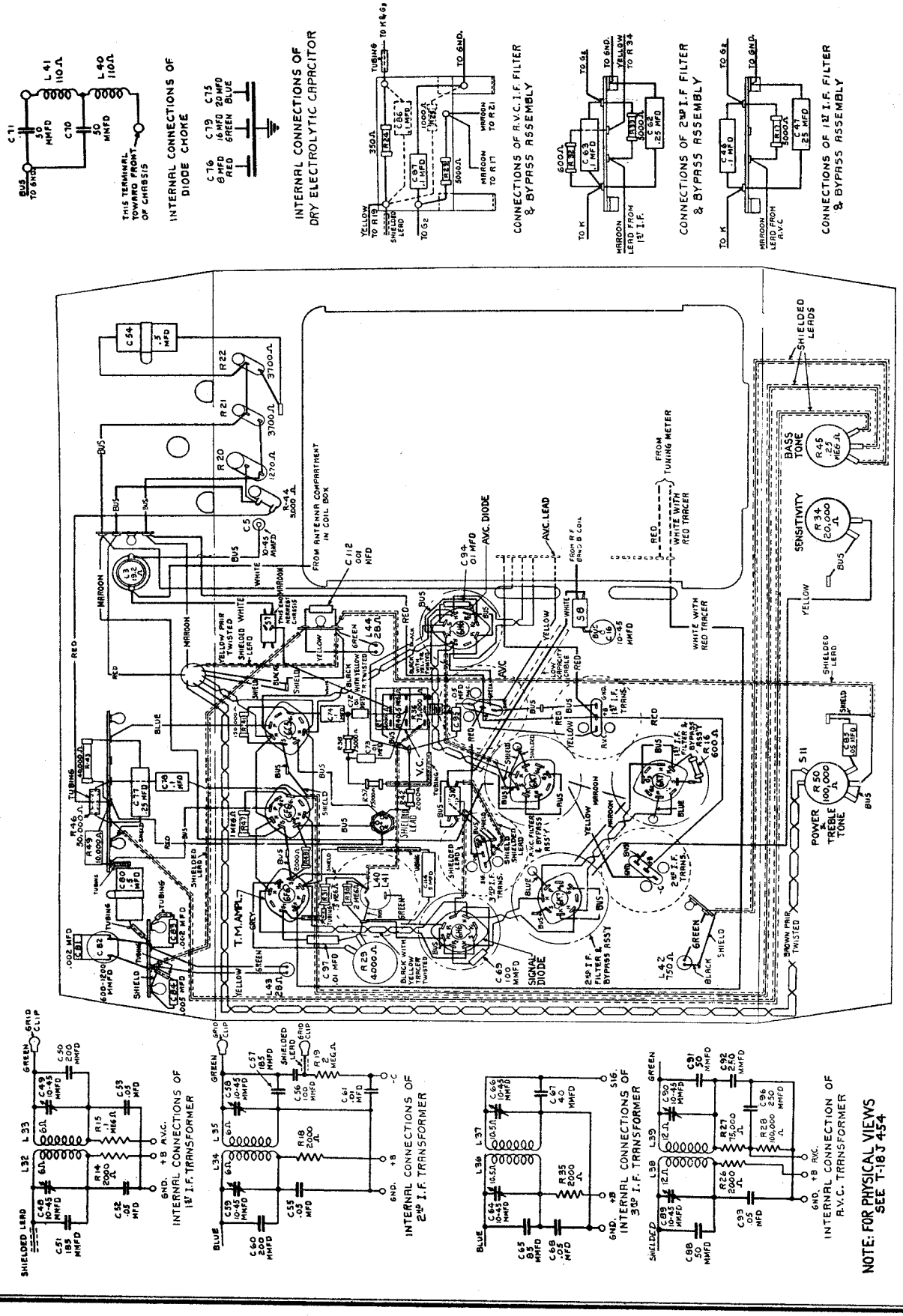

Fig. 1. Model A-205 Chassis Wiring Diagram

©John F. Rider, Publisher

MODEL A-205
Speaker and Power
Unit Wiring

GENERAL ELECTRIC CO.

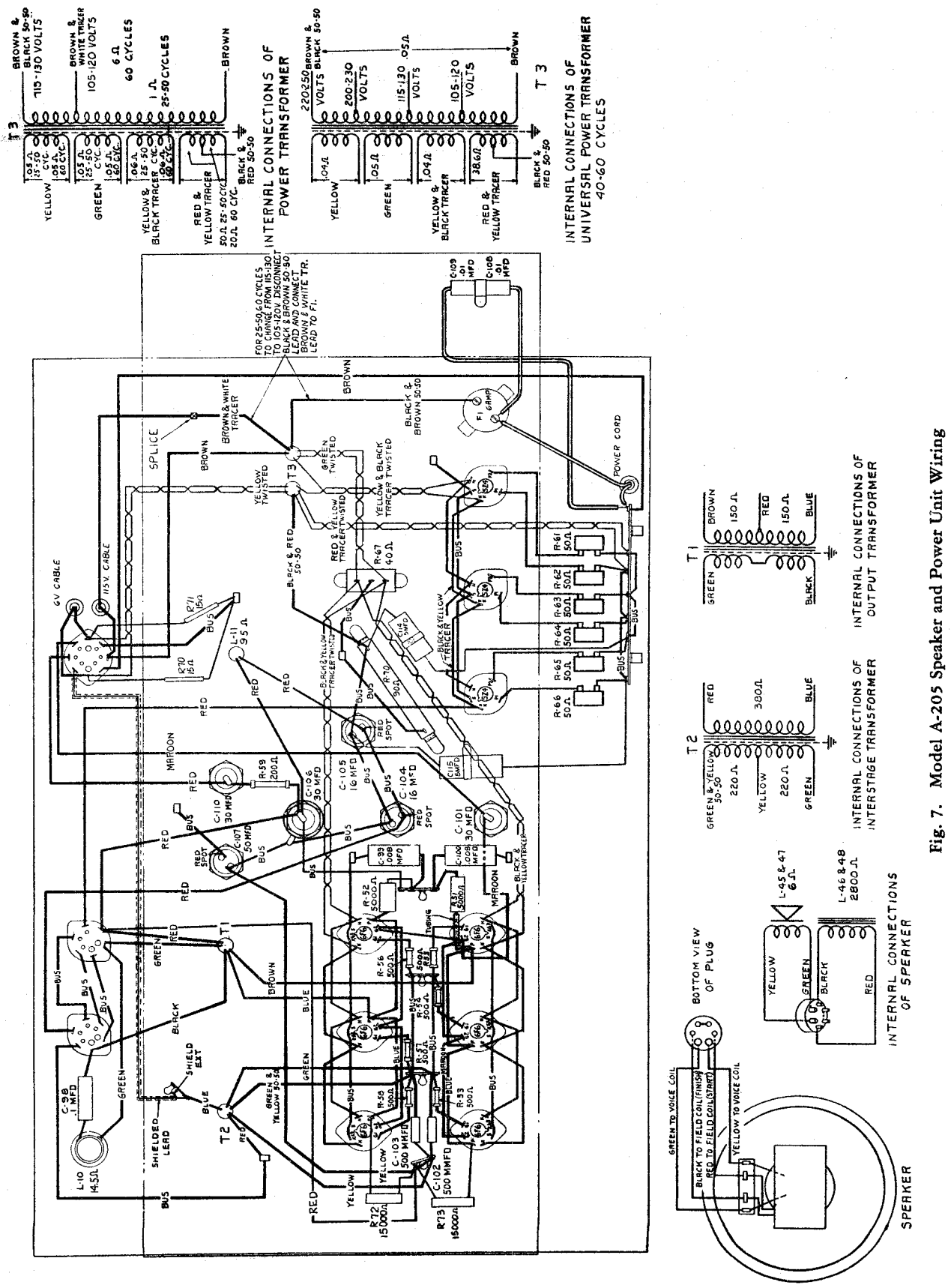

Fig. 7. Model A-205 Speaker and Power Unit Wiring

©John F. Rider, Publisher

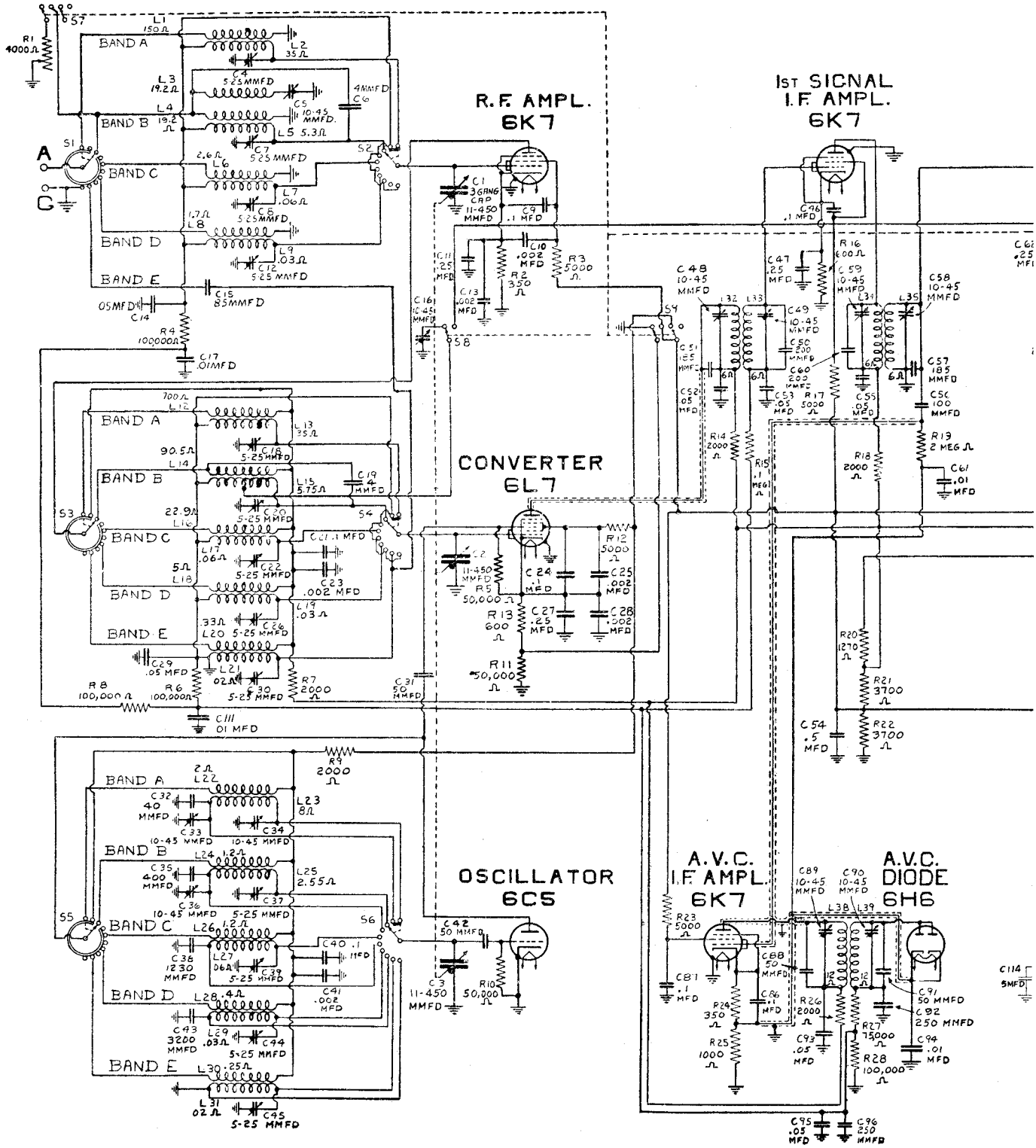

Fig. 3. Model A-

©John F. Rider, Publisher

ECTRIC CO.

MODEL A-208
Schematic

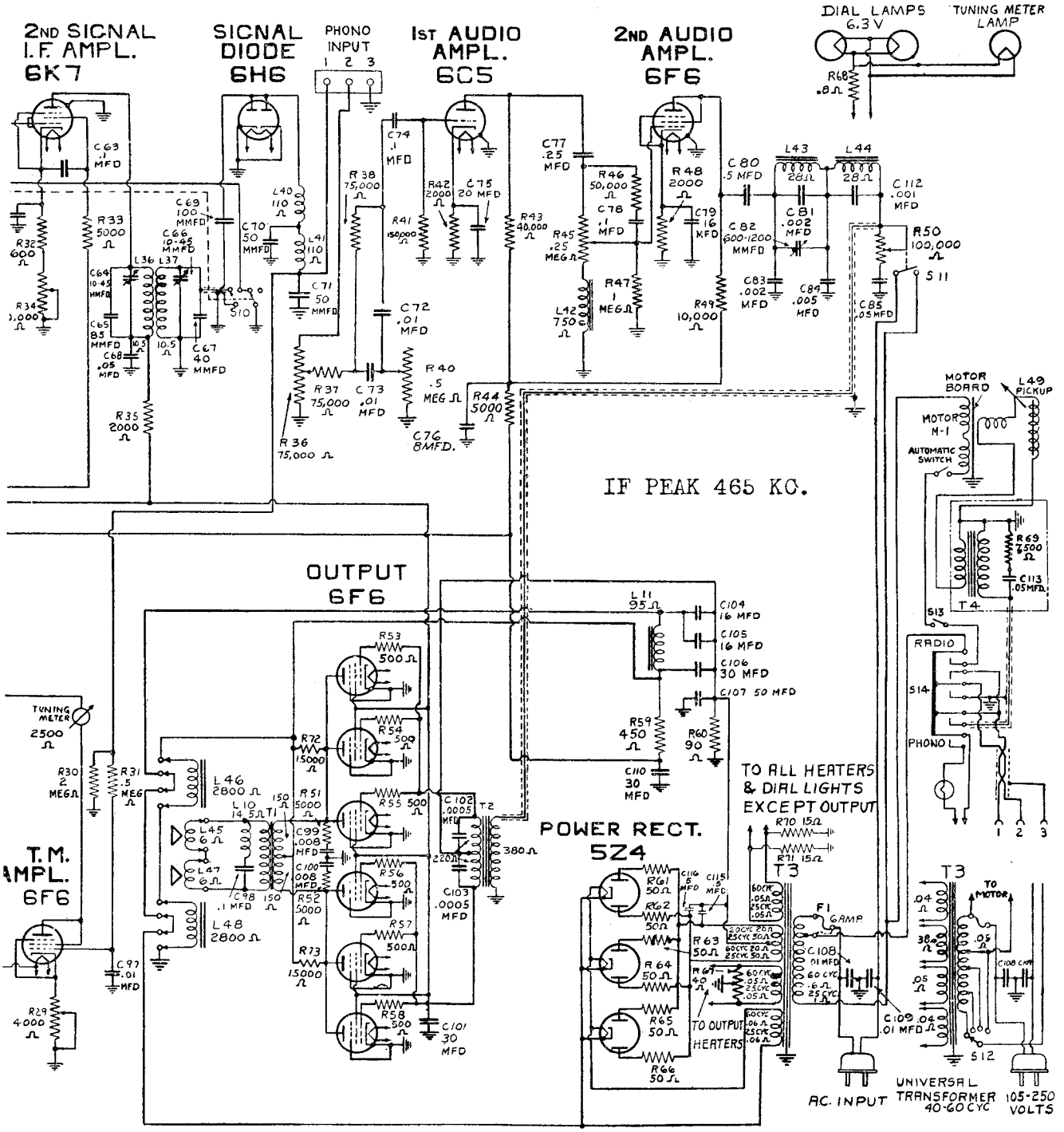

208 Schematic Circuit Diagram

GENERAL ELECTRIC CO.

MODEL A-208
Chassis Wiring
Coil Data

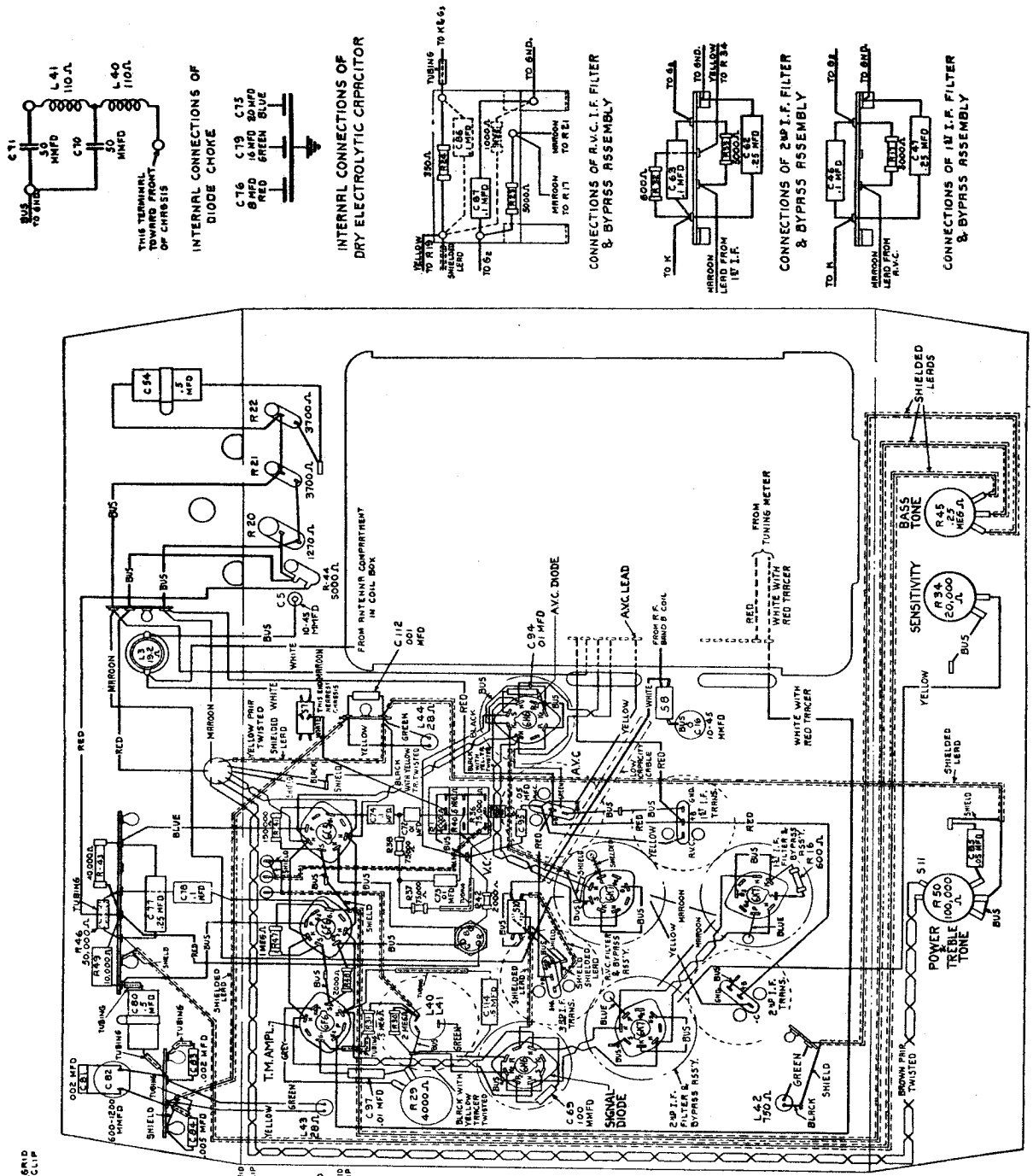

Fig. 4. Model A-208 Chassis Wiring Diagram

©John F. Rider, Publisher

MODEL A-208
Speaker and Power
Unit Wiring

GENERAL ELECTRIC CO.

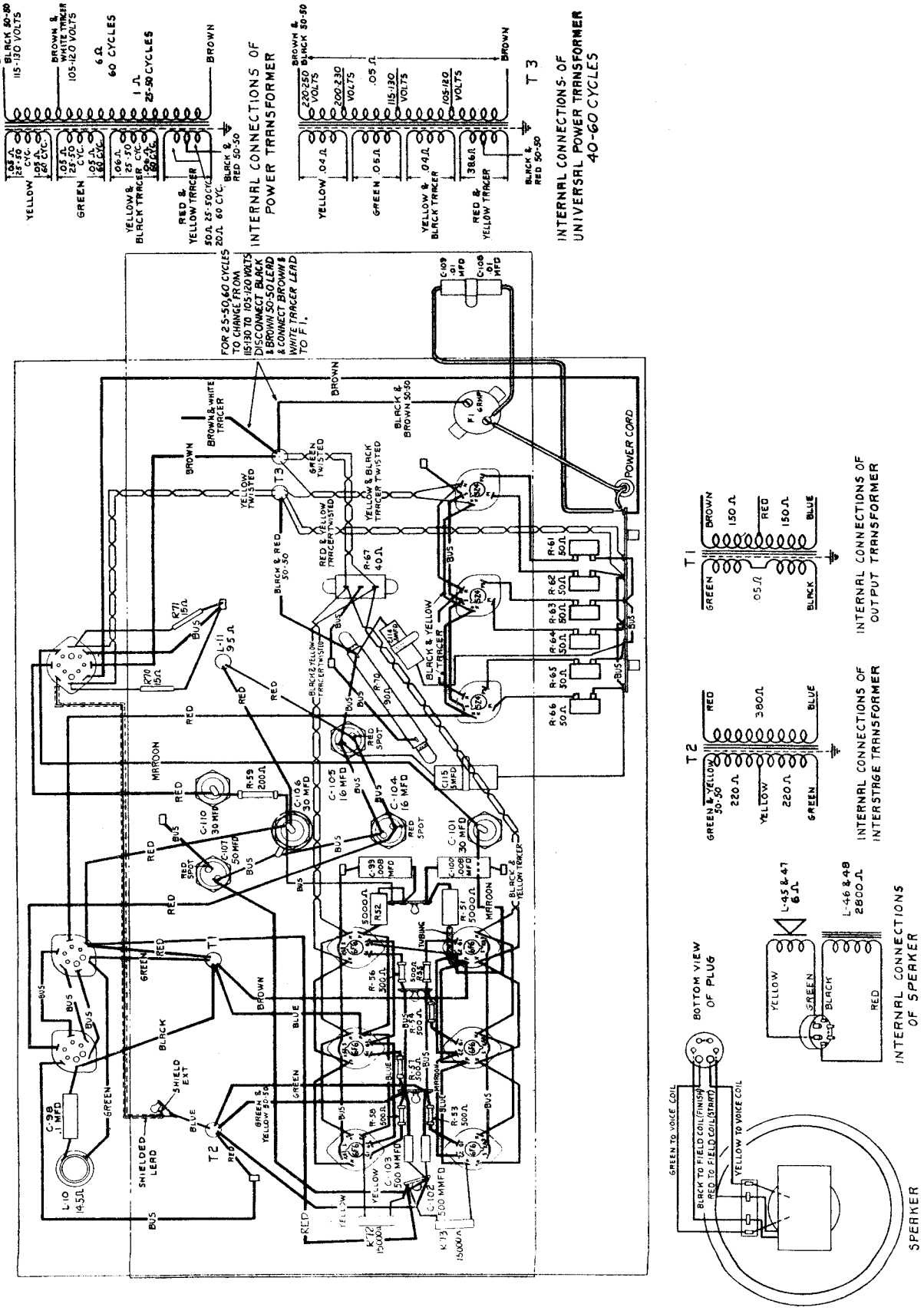

Fig. 8. Model A-208 Speaker and Power Unit Wiring

©John F. Rider, Publisher

GENERAL ELECTRIC CO.

MODELS A-205, A-208
"Sentry Box" Wiring

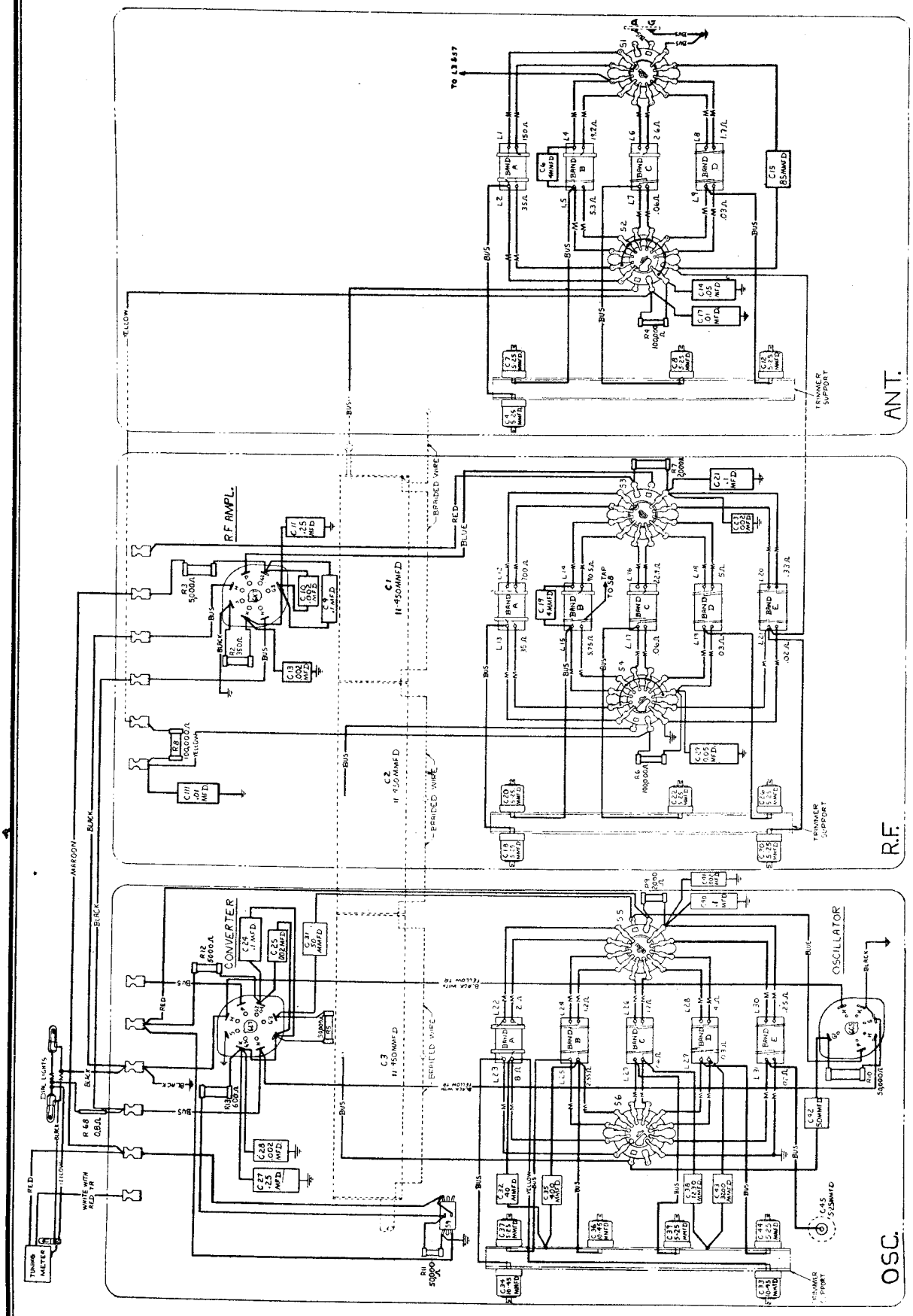

Fig. 6. Sentry Box Wiring Diagram

©John F. Rider, Publisher

MODELS A-205, A-208
Socket, Trimmers
Voltage

GENERAL ELECTRIC CO.

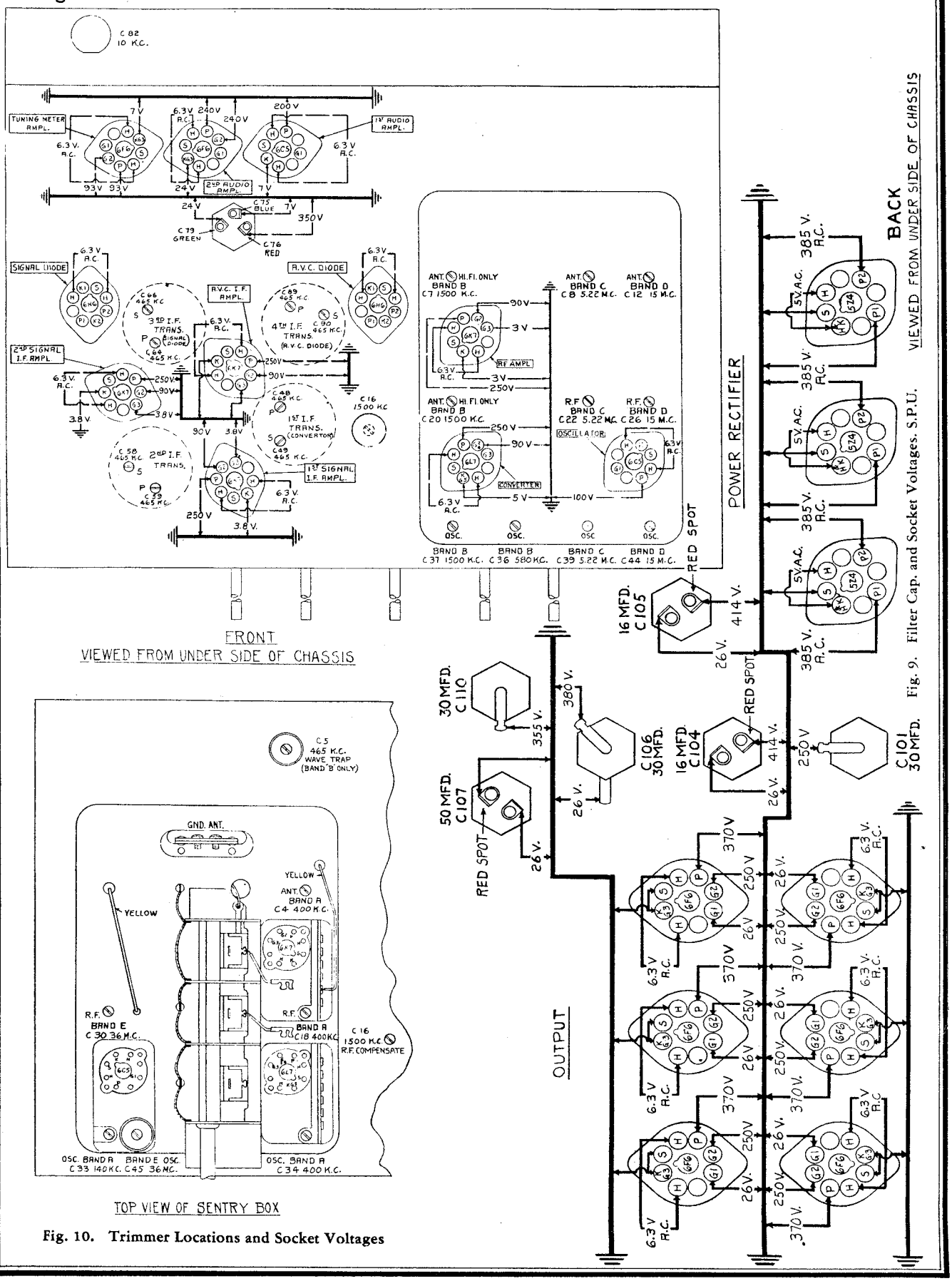

Fig. 9. Filter Cap. and Socket Voltages. S.P.U.

Fig. 10. Trimmer Locations and Socket Voltages

©John F. Rider, Publisher

GENERAL ELECTRIC CO.

MODEL A-208
Assembly Wiring

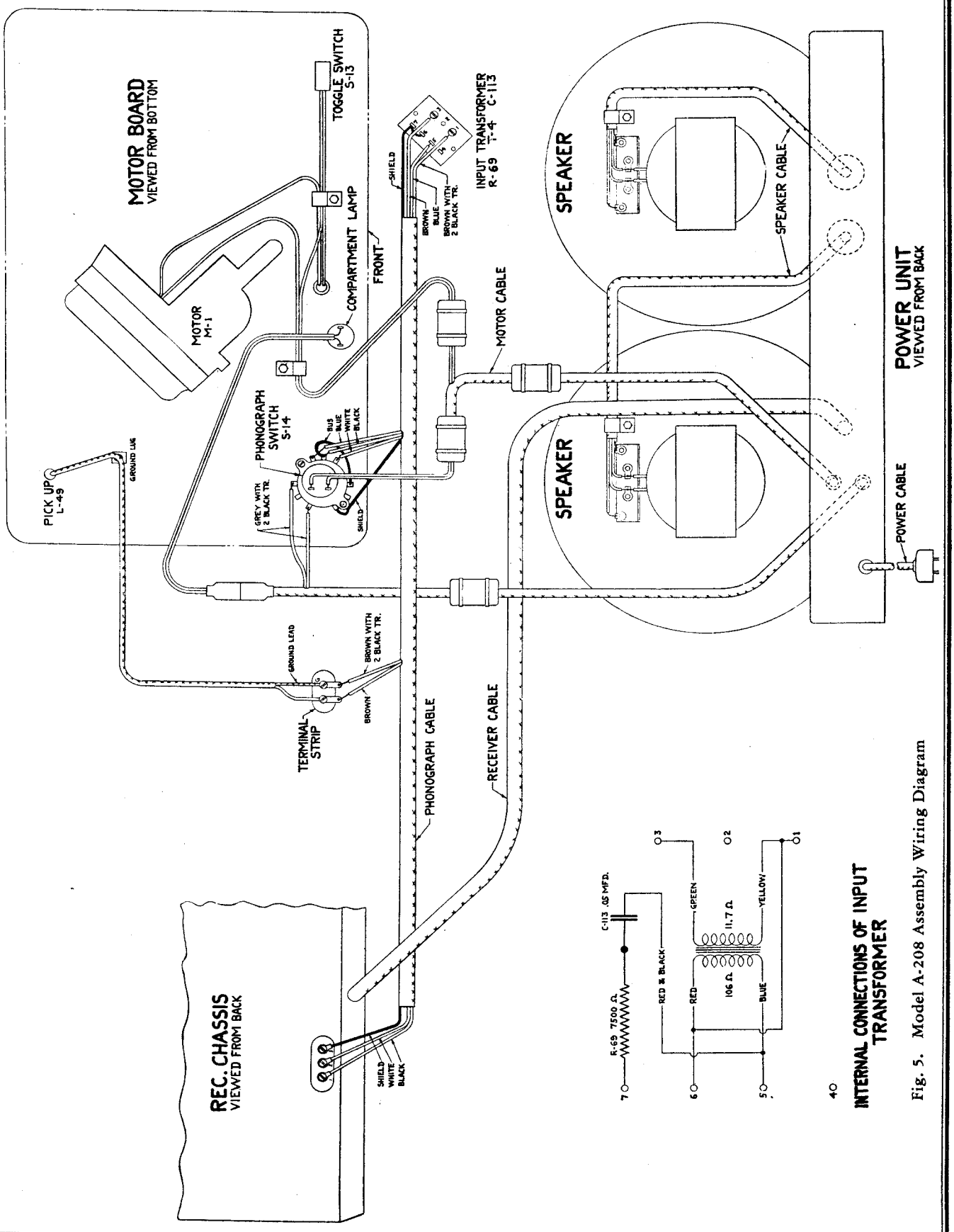

Fig. 5. Model A-208 Assembly Wiring Diagram

©John F. Rider, Publisher

©John F. Rider, Publisher

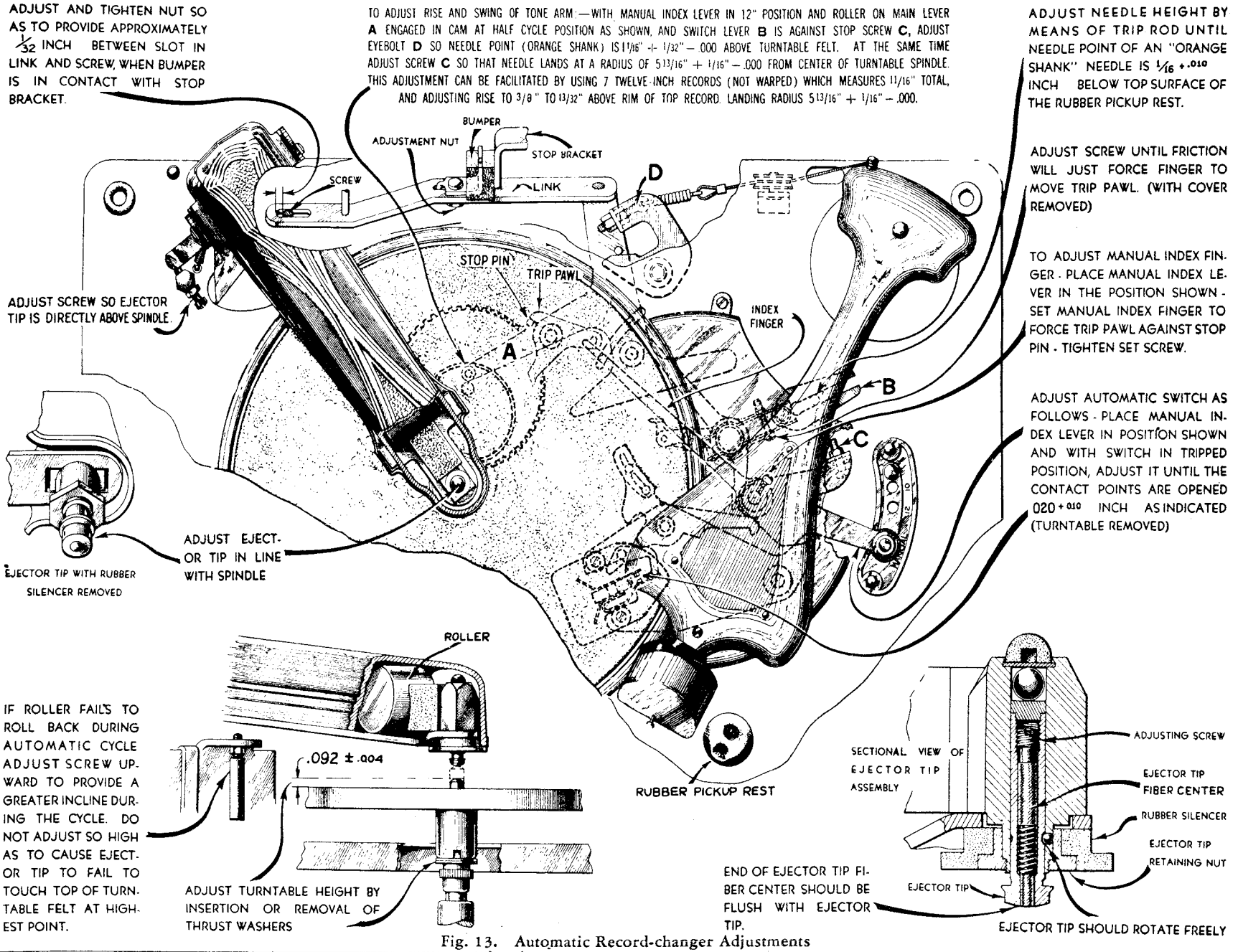

Fig. 13. Automatic Record-changer Adjustments

©John F. Rider, Publisher

A-205, A-208

SERVICE DATA

Physical Specifications

	A-205	A-208
Model		
Height	46 5/16 i.	40 1/16 in.
Width	33⅜ in.	53¼ in.
Depth	18 11/16 in.	21 5/16 in.
Weight Packed	215 lb.	294 lb.

Electrical Specifications

Rating Label	Power Supply (Volts)	Frequency (Cycles)	Power Consumption (Watts)
A	105–130	60	325
C	105–130	25–60	340
V	105–130 and 200–250	40–60	340

NOTE. Taps on universal transformers (Rating "V") are accessible by removing the cap cover on the top of the transformer. Schematic and wiring diagrams of the universal transformer are shown in Figs. 2 and 3.

Tuning Frequency Range

Band A	140-410 KC
Band B	540-1650 KC
Band C	1650-5450 KC
Band D	5450-18,000 KC
Band E	18-41 MC

Tuning Control Drive Ratio

Fast Tuning Drive Ratio 5½ to 1
Slow Tuning Drive Ratio 55 to 1
Precision Tuning Indicator Ratio 12 to1

Tuning Meter

Shadow Type D.C. milliammeter—operating from a separate 6F6 D.C. amplifier.

Electrical Power Output

Undistorted	28 watts
Maximum	40 watts

Loud-speaker Unit—Duo-Electrodynamic

Each Cone: 10¾ in. overall, 9¼ in. effective diameter
Each cone coil impedance: 6 ohms at 400 cycles
Total Series Impedance: 12 ohms at 400 cycles

Phonograph Pickup, Model A-208 Only

Viscoloid Damped
Pick-up Coil Impedance: 4.6 ohms at 1000 cycles

Record Changer, Model A-208 Only

Record Ejector Type
Capacity: Nine 10-in. records or eight 12-in. records
Turntable Speed: 78 rpm
Time to complete record-changing cycle: 4½ seconds.

Tubes

R. F. Amp.	6K7 Super Control Amp.
Converter	6L7 Hexode Converter
Oscillator	6C5 Low Mu Triode
1st I. F. Amp. (Sig.)	6K7 Super Control Amp.
2nd I. F. Amp. (Sig.)	6K7 Super Control Amp.
I. F. AVC Amp.	6K7 Super Control Amp
Detector	6H6 Twin Diode
A. V. C. Rectifier	6H6 Twin Diode
First Audio Tube	6C5 Low Mu Triode
2nd Audio Tube	6F6 (Triode connected)
Output (Push Pull Class A-B)	6-6F6 Power Amplifier
Power Rectifiers	3-5Z4 Parallel
Tuning Meter Amp.	1-6F6 (Triode connected)
Dial Lamps (three)	Mazda No. 46

A-205, A-208, A-205E, A-208E
DESCRIPTION OF ELECTRICAL CIRCUIT

Models A-205 and A-208 employ twenty metal envelope tubes connected so as to offer with the turning of a single knob the choice of either an all-wave superheterodyne circuit giving excellent selectivity and sensitivity on frequencies from 140 kc to 41,000 kc; or an R.F. amplifier employing two tuned circuits giving high fidelity reception from 540 kc to 1650 kc. Separate groups of coils are used for each frequency band, all radio frequency coils for both circuits being housed in the "Sentry Box" unit, together with their associated band switches, capacitors, resistors, and tube sockets. This type of construction permits using extremely short connecting leads and isolates each radio frequency circuit in its own shielded compartment. Permanence of alignment adjustments is assured through use of the new sealed, air-dielectric "Permaliner" trimmer capacitors in all tuned circuits. Sturdy chassis construction, including a removable base shield, insures rigidity of parts and freedom from microphonic vibration.

The change over between "High Fidelity" and "High Selectivity" is accomplished by means of four switches mechanically linked to the change-over knob shaft.

* A-205E, A-208E USE 19 TUBES

High Fidelity Receiver

On high fidelity position the receiver is operative only on band B. The four change-over switches make the following connections: S7 connects the antenna to ground through a 4000-ohm variable resistor which is one of the three units of the volume control and is necessary to minimize cross talk. S8 connects the output of the second R.F. transformer to a lead which in turn carries the R.F. power directly to the 6H6 diode detector. S9 removes the 6C5 oscillator plate voltage and renders the 6L7 inoperative by removing the screen voltage and placing the cathode positive with respect to the two control grids. S10 selects for the diode input power from the R.F. amplifier stage.

Having in mind the connections for high fidelity one may trace the course of the signal as follows. The signal on the antenna is applied to first R.F. transformer, the secondary of which is tuned and is connected to the control grid of the 6K7 R.F. amplifier. The signal is amplified and appears on the second R.F. transformer, the secondary of which is also tuned. A mid-tap on the secondary (Band B only) takes power from the coil and applies it to the plates of the 6H6 diode detector. From this point on, receiver operation is the same for both "High Fidelity" and "High Selectivity" and it is best that the high selectivity circuit be described next.

High Selectivity Receiver

On "High Selectivity" position the receiver is operative on all bands. Connections effected by the four change-over switches are as follows:

S7 removes the attenuating resistor R1 from the antenna, thus allowing full signal strength to be impressed on the first R.F. transformer at all times. S8 connects the mid-tap of the second R.F. transformer to a compensating condenser which takes the place of the lead formerly supplying R.F. to the 6H6 diode. S9 connects plate voltage to the 6C5 oscillator and screen voltage to the 6L7 converter. S9 also grounds the cathode return circuit of the 6L7 so as to properly bias it. S-10 connects the 6H6 diode detector plates to the output of the second intermediate frequency amplifier.

The course followed by the signal on the "High Selectivity" connection is as follows:

The signal from the antenna is applied to the control grid of the 6K7 R.F. amplifier tube through the antenna coil, the secondary of which is tuned to the incoming signal by the rear section of the main tuning condenser. The secondaries of the antenna, R.F. and oscillator coils for the band next lower in frequency to the one in use are short-circuited by the band switch to prevent absorption of energy at their resonant frequencies, which fall in the next higher band. The primaries of all antenna and R.F. coils not in use are short-circuited by the band switch.

The amplified radio frequency signal is impressed upon the signal control grid of the 6L7 hexode converter tube through the R.F. coil, the secondary of which is tuned to the signal frequency by the center section of the main tuning condenser. The 6L7 is a new type tube designed for improved superheterodyne conversion efficiency in conjunction with a separate oscillator tube. In the 6L7, two separate control grids are shielded from each other and each acts independently upon the electron stream. Coupling effects between the signal and oscillator control grids are very small, making possible high gain and stable oscillator outputs at high frequencies and effectively reducing interaction between tuned circuits in the receiver.

The superheterodyne oscillator signal is generated by the 6C5 oscillator tube, its frequency being maintained 465 kc above the incoming signal frequency by the front section of the main tuning condenser in conjunction with the oscillator coil and padding capacitors. The oscillator section of the main tuning condenser, although of the same capacity as the other two sections, is larger physically to permit wider spacing of the plates, thereby reducing the possibility of microphonic feedback howl. The oscillator output is coupled to the oscillator grid of the 6L7 tube, where it is combined with the signal frequency to produce the intermediate frequency of 465 kilocycles. This particular intermediate frequency is chosen to reduce image response and improve short-wave performance.

The converter I.F. (intermediate frequency) transformer, consisting of two tuned circuits, transfers the I.F. output from the converter tube to the control grid of the 6K7 first I.F. signal amplifier tube. Here the I.F. signal is amplified and appears on the first I.F. signal amplifier transformer. This transformer consists of two tuned circuits and transfers the energy to the control grids of the second 6K7 signal I.F. amplifier tube and the 6K7 AVC (automatic volume control) I.F. amplifier tube. Separate I.F. channels are used for further signal amplification and for automatic volume control. The sensitivity of the receiver is controlled by a variable resistor in the cathode circuit of the second 6K7 signal I.F. amplifier which varies the amplification in that circuit upon manipulation of the sensitivity control. By controlling sensitivity in the I.F. circuit, better signal-to-noise ratio is obtained at reduced sensitivity.

The output from the second signal I.F. amplifier tube is coupled to the 6H6 diode detector through the second signal I.F. transformer. Both primary and secondary coils of this transformer are tuned.

Signal for automatic volume control is amplified by the 6K7 AVC I.F. amplifier tube, the plate circuit of which is connected to the primary coil of the AVC I.F. transformer. Both primary and secondary of this transformer are tuned, the 6H6 AVC rectifier being connected across the entire secondary. An initial negative voltage of about 11 volts, obtained from the bias resistor R25 of the AVC 6K7 amplifier, is maintained on the plates of the AVC rectifier tube. This gives delayed AVC action, which prevents attenuation of weak signals and gives a flat AVC characteristic on strong signals. Through the use of dual-channel, delayed AVC, the output of the receiver will not vary more than a few per cent over variations in signal input of 100,000 to 1. The d-c drop across R-28 due to the rectified signal supplies full automatic bias to the R.F. amplifier and converter tubes and to the signal I.F. amplifier.

Detector and Audio Frequency Circuits

In the 6H6 tube the signal is rectified, the audio frequency component producing a corresponding voltage drop across the R-36 section of the manual volume control. This is a triple control, the second or lo-note compensation section (R-40) acting with capacitors C-72 and C-73 and resistor R-38 to preserve proper balance between high and low audio frequencies as the volume is changed. The third section of the volume control is the aforementioned antenna attenuator, R1. The manual volume control selects the amount of audio signal applied through coupling capacitors C-74 to the grid of the 6C5 first audio amplifier tube and thus controls the output of the receiver.

Power from the 6C5 audio amplifier is applied through C-77 to the input network of the 6F6 triode audio stage. This network consists of resistors R-45, R-46, R-47, condenser C-78 and inductance L-42, and comprises the bass tone control. Voltage developed across the 6F6 plate resistor R-49 is applied through condenser C-80 to the high cut-off network, L-43, L-44, C-81, C-82, C-83, C-84, C-112. This circuit is very effective in rejecting unwanted heterodyne signals which otherwise might be annoying on high fidelity reception.

The audio signal is then impressed on the grids of the high power output amplifier through transformer T2. R-50 and C-85 across the primary of T2 comprise the treble tone control. The power amplifier consists of six 6F6's in Pentode push-pull parallel with a maximum output of 40 watts. This amplifier is in turn matched to the dual stabilized dynamic speaker unit through transformer T1.

Tuning Meter

The tuning meter operates on both "High Fidelity" and "High Selectivity," its action being dependent on the d-c voltage developed across R-37 caused by the rectified incoming signal. This voltage is impressed on the grid of the 6F6 T.M. (tuning meter) amplifier tube and affects the plate current of this tube. The meter is in the plate circuit of this tube and is sensitive to changes in plate current. Thus, the meter gives relative readings of the incoming signal strength. The 6F6 T.M. amplifier is biased by voltage across R-29 (which is adjusted at the factory) to give maximum meter deflection for a strong signal.

Power Supply

Plate and grid voltages for all tubes and power for the speaker unit fields are supplied by the power supply system employing three 5Z4 full wave rectifiers with their corresponding plates in parallel. Equal distribution of the current load among the rectifiers is assured by the plate series resistors R-61 to R-66 inclusive. Filtering action is obtained by the filter choke L-11 and its associated filter condensers, while various resistors throughout the set fix the applied voltages at their proper values.

Phonograph, Model A-208 Only

The record-reproducing facilities consist of a low impedance magnetic pick-up with its associated inertia-type tone arm, and the compensated volume control, audio amplifier and loud-speaker of the receiver. In changing from radio reception to phonograph reproduction the radio-phono switch simultaneously disconnects the 6H6 diode from the volume control, connects the secondary of the phonograph input transformer across this control, and renders the radio frequency amplifier inoperative by inserting a high resistance in the cathode circuit of the 6A8 converter and oscillator tube.

The turntable assembly consists of the perfected automatic record changer, which is simple and foolproof in operation. A separate motor switch is provided to permit starting and stopping the phonograph motor independently without operating the radio-phono switch.

ALIGNMENT PROCEDURE

Alignment Frequencies

I.F.	Band "A"	Band "B"	Band "C"	Band "D"	Band "E"
465 KC	145 KC 400 KC	580 KC 1500 KC	5220 KC	15,000 KC	36,000 KC

In order to align this receiver properly, it is necessary to have available the following test equipment:

1. A modulated test oscillator with the above alignment frequencies available. In case 36,000 KC (36 MC) is not directly available, the second harmonic of 18,000 KC usually will be found strong enough for alignment purposes. The test oscillator calibration points for all alignment frequencies should be checked at the time of using. A reliable check by the zero beat method may be obtained against known controlled frequencies such as broadcast station frequencies and their harmonics.
2. An output indicator, such as a high resistance a-c voltmeter with a maximum scale reading of 3 to 5 volts, or a neon lamp indicator.
3. An alignment tool consisting of an insulating shaft with a small screw-driver blade.
4. A tuning wand.

The location of all trimmer capacitors is shown in Fig. 10. *It should be noted that on "Permaliner" trimmer capacitors, used throughout this receiver, clockwise rotation of the adjusting screw decreases capacity, while counterclockwise rotation increases capacity.*

If the phonograph cable is disconnected from the chassis on Model A-208, it is necessary to connect terminals 1 and 2 together before the receiver will operate.

NOTE: To remove the chassis from Model A-208 it is necessary to take off the front right curved panel of the cabinet. The screws holding this panel are accessible from the front upon opening the right-hand record compartment door.

1. I.F. Alignment Adjustments

The I.F. Alignment adjustment is not easily made without oscillograph equipment. Moreover, the AVC channel alignment requires removal of the chassis from the cabinet and removal of the base shield. (Removal of the base shield does not, however, affect any of the circuits.) There is also the

danger that the frequency of the test oscillator will be much farther from 465 kc than the receiver's I.F. peak, even after long service. Unless the test oscillator frequency can be given a precision check at the time of using, it is better not to shift the I.F. peak frequency of the receiver at all, unless bad alignment is definitely indicated.

Each of the three I.F. transformers has two air-dielectric "Permaliner" trimmer capacitors. The secondary of the converter I.F. transformer delivers signal to two separate I.F. channels, the signal channel and the A.V.C. channel, which must be aligned independently.

Signal I.F. Channel

Set the frequency band switch of the receiver to Band "B." Short-circuit the antenna and ground terminals, tune the receiver to some point above 1500 KC so that no signal is heard, and ground the chassis.

Connect the test oscillator output between the connected grid clip of the 6L7 converter tube and the receiver chassis. Connect the output indicator across the cone coil of the loud-speaker. Turn on the receiver and set the volume and sensitivity controls to maximum (extreme clockwise position). Place the test oscillator in operation and set the test oscillator dial to 465 KC. Reduce the input from the test oscillator until only a slight output registers on the output indicator across the speaker cone coil. The input should be kept at such a low level that a temporary removal of the 6H6 A.V.C. rectifier tube makes no appreciable difference in output.

Before touching the receiver trimmers, adjust the *test oscillator* for maximum response. Note the exact setting of the test oscillator dial so it may be duplicated if necessary. This setting is likely to be very close to 465 KC and should be used for the I.F. adjustment following, unless bad misalignment is definitely evident, in which case the most accurate known test oscillator setting may be used. Trimmer locations are shown in Fig. 4.

Alignment adjustments should be made in the following sequence:

1. 3rd I.F. Transformer (Signal Diode)

Remove the test oscillator connection from the grid of the 6L7 tube and attach it to the connected grid clip of the 6K7 2nd signal I.F. amplifier tube. Adjust each of the two 3rd signal I.F. trimmers in turn. There is some interaction between two trimmers of the same transformer, so that these alternate adjustments should be repeated several times until a maximum output is obtained. Do not touch these trimmers again.

2. 2nd I.F. Transformer

Remove the test oscillator connection from the grid of the 2nd signal I.F. tube and attach it to the connected grid clip of the 6K7 1st I.F. amplifier tube. Adjust each of the two 2nd I.F. transformer trimmers alternately several times until a maximum output is obtained. Do not touch these trimmers again.

3. 1st I.F. Transformer (Converter)

After the alignment of the 2nd signal I.F. transformer is finished, restore the test oscillator connection to the grid clip of the 6L7 converter tube. Adjust each of the two converter (1st) I.F. trimmers alternately several times until a maximum output is obtained. Do not touch these trimmers again.

4. 4th I.F. Transformer (A.V.C. Diode)

After alignment of the 3rd I.F. transformer, 2nd I.F. transformer and converter transformer is completed, remove the output meter from the cone coil. Then remove the test oscillator connection from the grid of the 6L7 tube and attach it to the connected grid clip of the 6K7 A.V.C. I.F. amplifier.

Next remove the guard over the terminal boards on the "Sentry Box." Connect a high resistance voltmeter (this meter should have at least 1000 ohms per volt resistance and should be used on the 100-volt position or higher), to the yellow A.V.C. lead (See Fig. 1) on the R.F. compartment terminal strip and the chassis. The A.V.C. rectifier tube has delay bias voltage which should be removed by connecting its cathodes to the chassis. Then adjust each of the two A.V.C. I.F. trimmers alternately several times until a maximum output is obtained on the voltmeter. The peak, however, being rather broad, when properly trimmed, may be somewhat difficult to obtain. Do not touch the A.V.C. I.F. trimmers again.

Restore all original connections; this completes the I.F. alignment.

2. R.F. "Sentry Box" Alignment Adjustments

Bands "A" and "B" each require four trimmer adjustments, while Bands "C" and "D" each require three, and Band "E" only two. Take care to adjust only the trimmers under test. Connect the test oscillator to the antenna and ground terminals and place the receiver in operation with the output indicator across the speaker cone coil. A standard "dummy antenna," for connection between the test oscillator and the receiver antenna terminal, is a capacitor of 250 mmfd. (Stock No. RC258) in series with a resistor of 200 ohms; a condenser at least *must* be used, having some such small value of capacitance. Before any alignment the position of the pointer should be checked. This position should be at the extreme left-hand scale mark on the Band "B" scale for maximum capacitance position of the main tuning condenser (plates fully engaged).

The Oscillator, Converter Input and Antenna Compartments of the Sentry Box are conveniently referred to as "OSC", "R.F." and "ANT", respectively, thereafter. Before making any adjustments, it is wise to determine the correctness of the existing alignment. This may be done by supplying a signal from the test oscillator to the receiver, at the alignment frequencies only, and inserting a "Tuning Wand" into the coil involved. The "Tuning Wand" consists of a rod of insulating material having a ring of non-magnetic metal attached to one end, and a small core of finely divided iron compacted into the opposite end. By inserting the metal ring into the center of a particular coil through the openings provided in the "Sentry Box" compartment shields, the inductance of that coil is lowered, increasing its resonant frequency. If the circuits are in exact alignment, inserting either end of the tuning wand in any coil will result in a decrease in output. When an increase in signal is obtained with the iron-filled end of the wand, a decrease in resonant frequency of that circuit by increasing its trimmer capacity is indicated. When an increase in signal is obtained with the metal ring, a decrease in trimmer capacity is indicated.

CHANGES INDICATED BY WAND

Wand	Signal	Trimmer adjustment required
Metal Ring	Decrease	None
Iron Filings	Decrease	
Metal Ring	Increase	Decrease Capacity
Iron Filings	Decrease	
Metal Ring	Decrease	Increase Capacity
Iron Filings	Increase	

Band "A" (140-410 KC)

Band "A" (140-410 KC)

Set the band change switch to the position where the scale indicates the above range. This will be at the extreme counterclockwise position of the band change switch knob. Be sure the center control knob is in the high-selectivity position.

Tune the test oscillator to 400 KC, set the pointer at 400 KC on the receiver, and adjust the Band "A" OSC, R.F. and ANT trimmers for maximum output. To reduce noise pick-up it is advisable to turn the sensitivity control to minimum sensitivity (counterclockwise) position. If necessary, reduce input from the test oscillator so that the signal reaching the speaker is kept at a low or moderate level.

Next tune the oscillator to 145 KC. Keep slowly rocking the tuning knob through the point of resonance, at the same time adjusting the 145 KC padding trimmer, until the highest peak of output is secured.

"Noise" alignment may be substituted when the preceding adjustment is nearly finished, in cases where there is a steady output of very loud pick-up noise at the lower end of the scale. With the pointer at 145 KC on the receiver and the test oscillator removed, simply adjust the 145 KC padding trimmer only until a peak in the noise output is obtained. This should result in the same trimmer setting as in the preceding paragraph.

The interaction between the trimmer adjustments at each end of the scale makes it necessary to repeat the adjustments alternately until both are correct. This may require two or three adjustments each. *The last adjustment* must always be made at the high frequency end of the scale. This completes the adjustment of this band; do not touch these trimmers again.

Band "B" (530-1660 KC)

Set the band change switch to the position where the scale indicates the above range. Turn the hi-fidelity switch to the *hi-fidelity* position. Make sure the test oscillator output is quite high. Tune the test oscillator to 1500 KC, set the pointer at 1500 KC on the receiver dial, and adjust the Band "B" R.F. and ANT trimmers for maximum output, reducing input to maintain a low or moderate signal.

Now reduce the test oscillator output and without changing the receiver or test oscillator frequencies, throw the high fidelity switch to the high selectivity position. At this point adjust the Band "B" OSC trimmer for maximum output. Adjust the compensating Band "B" R.F. trimming, which is on top of the chassis between the 1st I.F. transformer (converter) and the Sentry Box, for maximum output.

Next tune the oscillator to 580 KC. Keep slowly rocking the tuning knob through the resonance point, at the same time adjusting the Band "B" padding trimmer for maximum output.

The interaction between the trimmer adjustments at each end of the scale make it necessary to repeat the adjustments alternately until both are correct. This may require two or three adjustments each. The last adjustment must always be made at the high frequency end of the scale. This completes the adjustments of this band.

Band "C" (1.58-5.4 MC)

Set the band change switch to the position where the scale indicates the above range. Be sure the center control knob is in high selectivity position.

Tune the test oscillator to 5.22 MC, set the pointer at 5.22 MC on the receiver, and adjust the Band "C" OSC trimmer for maximum output, reducing input to maintain a low or moderate signal.

Check for the image signal which should be received at about 4.3 MC on the receiver dial. It may be necessary to increase the input to the receiver from the test oscillator for this check.

Retune the receiver to the correct scale reading 5.22 MC to secure the previous response. Adjust the RF and ANT trimmers now also for maximum output. This completes the alignment of Band "C"; do not touch these trimmers again.

Band "D" (5.3-18.3 MC)

Set the band change switch to the position where the scale indicates the above range. This position should occasionally be readjusted during subsequent trimmer adjustment, since it is possible to get some signals through on the higher frequencies when the switch position is not exactly in position.

Tune the test oscillator to 15 MC, set the pointer at 15 MC on the receiver, and adjust the OSC trimmer for maximum output, leaving it at the *first* peak obtained when increasing it from minimum capacitance by counterclockwise rotation.

Check for the image signal which should be received at about 14.1 MC on the receiver dial. It may be necessary to increase the input to the receiver from the test oscillator for this check.

Reduce the capacitance of the RF trimmer to minimum. Reset the main tuning knob to secure the previous response at 15 MC and, while slowly rocking the knob through this resonance point, increase the RF trimmer capacitance until a maximum response is obtained.

Carefully holding the main tuning knob on the peak of resonance at 15 MC, adjust the ANT trimmer for maximum output. This completes the alignment of Band "D"; do not touch these trimmers again.

Band "E" (16-41 MC)

Set the band change switch to the position where the scale indicates the above range. This position should occasionally be readjusted during subsequent trimmer adjustment, since it is possible to get some signals through on the higher frequencies when the switch position is not exactly in position.

Tune the test oscillator to 36 MC, set the pointer at 36 MC on the receiver, and adjust the OSC trimmer for maximum output, leaving it at the *first* peak obtained when increasing it from minimum capacitance by counterclockwise rotation.

Check for the image signal which should be received at about 35.1 MC on the receiver dial. It may be necessary to increase the input to the receiver from the test oscillator for this check.

Reduce the capacitance of the RF trimmer to minimum. Reset the main tuning knob to secure the previous response at 36 MC and while slowly rocking the knob through this resonance point, increase the RF trimmer capacitance until a maximum response is obtained. There is no ANT trimmer to adjust.

This completes the alignment of Band "E"; do not touch these trimmers again.

Adjustment of Wave Trap

To adjust the 465 KC Wave Trap set the dial scale for Band "B," increase the output of the test oscillator and adjust it to 465 KC, leaving it connected to the ANT and GND posts of the receiver. Now adjust the 465 KC trimmer (C5) which is mounted on top of the chassis immediately behind the "Sentry Box," to *minimum* output. This completes this alignment; do not adjust this trimmer again.

Adjustment of 10 Kc Trap

Obtain an audio oscillator; tune it to 10 KC; connect its output to the signal diode plate. This can be done by removing the signal diode and connecting to either of its plates by means of a test prod. Now adjust the trimmer (C82) on the back skirt of the chassis for minimum output in the cone coil. This completes this adjustment. Do not disturb it again.

Dual Unit Speaker

If, for any reason, it is necessary to disconnect one or both of the speaker units the speaker wiring diagram (see Fig. 5 and 7) should be carefully followed upon reconnecting either unit. It is important that both the field coil and voice coil of each be connected properly in order that the voice coils operate in phase.

VISUAL ALIGNMENT OF I.F.

In order to realize to full advantage the performance built into a receiver of this class at the factory, circuit alignment using cathode-ray oscilloscope equipment is much to be preferred. The oscilloscopic method is particularly advantageous in aligning the I.F. tuned circuits.

For visual alignment it is necessary to vary the frequency of an unmodulated test oscillator signal over a range extending on both sides of the peak frequency. This variation must take place in synchronism with the horizontal traverse of the cathode-ray beam on its screen. The frequency modulator must therefore, provide means for synchronizing the periodic test frequency variation with the cathode-ray horizontal deflection circuit. The test oscillator may advantageously have facilities for audio-frequency amplitude modulation of a fixed radio frequency test signal, as well as for frequency modulation, but audio modulation is not required for visual I.F. alignment.

Instead of an output meter across the speaker cone coil, the vertical plates of the cathode-ray tube are connected across the load resistor of one of the diode rectifiers of the receiver. With the frequency modulator in operation in conjunction with the test oscillator, the resonance curve of the circuit under test will then be shown on the screen.

Preliminary Procedure

In order to properly connect the oscilloscope for visual alignment, it is necessary to remove the base pan shield from the bottom of the receiver chassis. After this is done a preliminary alignment should be made as outlined under I.F. Alignment Procedure using the oscilloscope as an output meter. To do this connect the vertical plates of the oscilloscope across the receiver volume control (R36) and turn off the horizontal sweep entirely, using only the vertical deflection as an indication of output. In carrying out this preliminary alignment the test oscillator sweep mechanism is not used.

Final Visual Adjustments

Connect the test oscillator output to the control grid of the 6L7 converter tube and place the sweep mechanism in operation. Turn on the horizontal sweep of the oscilloscope and synchronize it correctly with the test oscillator sweep mechanism. Now adjust the *test oscillator* so that the two I.F. response curves are coincident as nearly as possible. This gives a setting for the test-oscillator frequency which must not be changed throughout the rest of the procedure.

To align the signal I.F. and converter I.F. transformers connect the test oscillator as described in I.F. alignment beginning on page 15 and adjust the corresponding transformer trimmers so as to cause the resulting I.F. response curves to be coincident and as high as possible.

After alignment of the signal and converter I.F. transformers has been completed, the vertical plates of the oscilloscope should be connected to the yellow A.V.C. lead and the chassis. Connect the test oscillator output to the grid of the A.V.C. 6K7 I.F. amp. and ground the cathode of the A.V.C. diode. Adjust the A.V.C. I.F. trimmers so that the response curves are coincident and of maximum height. This completes the I.F. alignment.

©John F. Rider, Publisher

©John F. Rider, Publisher

Visual R.F. alignment may be carried out in the same general manner as above by applying a suitable frequency-modulated signal between the antenna and ground terminals of the receiver and connecting the cathode-ray vertical deflecting plates across the receiver volume control.

METHOD OF SERVICE PROCEDURE—SENTRY BOX

The "Sentry Box" assembly includes the tuning condenser and dial mechanism as well as the coil and switch compartments. The complete unit may be dismounted from the chassis by removing the side-fastening bolts, unscrewing the dial mechanism anchoring nut and unsoldering the leads to the chassis from the terminal strips.

In order to remove the coil shield cans it is necessary to take out the frequency band switch shaft. With the "Sentry Box" dismounted from the chassis the dial gears may be disengaged and the switch shaft removed merely by lifting the reduction drive end of the dial assembly, allowing the switch shaft gear to pass the dial scale cap shaft. With the "Sentry Box" mounted in place, removal of the switch shaft requires removing the dial scale gear and cap shaft.

Each compartment shield can houses a bracket assembly comprising the coils, band switch and other component parts associated with that particular circuit. With the band

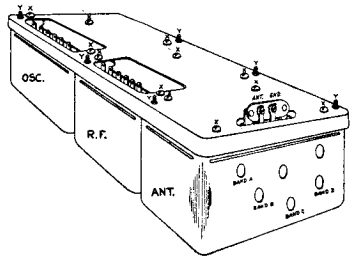

Fig. 11. "Sentry Box" Coil Locations and Assembly

switch shaft out, any shield can be easily removed by unscrewing the two mounting stud nuts ("Y," Fig. 11).

In most cases, coils or Permaliner trimmer capacitors may be replaced merely by removing their particular shield can. It is an easy matter, however, to remove each complete bracket assembly by taking out the mounting bolts ("X," Fig. 11) and unsoldering the bus or braid connections to the tuning condenser. In the case of the R.F. or oscillator units it will also be necessary to unsolder the external leads to the respective terminal boards of these units.

Permaliner trimmers are replaced by unsoldering the bus lead from the trimmer terminal, and then unsoldering the Permaliner case from its mounting cup. The latter operation may require the use of two soldering irons.

Coils are replaceable by merely unsoldering the coil lugs from the switch lugs. If it is necessary to replace a section of the band switch, however, it will be found expedient to remove the complete bracket and coil assembly for easy access to the switch lugs.

ADJUSTMENT OF DIAL MECHANISM

The dial mechanism is rigidly mounted at one end to the tuning condenser frame by two removable screws, and anchored to the chassis deck at the other end by a rubber-cushioned nut. The dial pointer, station selector knob, and tuning condenser drive drum are interconnected by means of the drive cord and drive cable; the frequency band switch and cylindrical scale by the switch shaft and the scale gears. The precision tuning indicator assembly is mounted independently by two screws to the tuning condenser frame. The tuning meter is fastened to the dial mechanism mounting plate with two other screws.

1. Position of Drum on Condenser Shaft

With set screws (5) loosened and tuning condenser plates fully engaged, place the drum in the position shown in Fig. 12. The drum should be located on the tuning condenser shaft so as to be in line with the drive cord pulleys (1/16 in. from the dial mechanism mounting bracket) and so that, with condenser plates fully engaged, guide (50) occupies the position shown in Fig. 12.

2. Removing and Replacing Scale

Pry out fastener (40) and remove the scale by lowering the fastener end below the mounting ear. Take the scale out of cap assembly (29). Replace by placing tabs of caps (29) and (30) in slots of scale. Replace fastener (40).

3. Removing and Replacing Band Switch Shaft

To remove the band switch shaft with the "Sentry Box" assembled in place, the dial scale cap and gear must be removed. This is done by removing the cylindrical scale as in paragraph 2. Then loosen set screws (9) and remove cap (29), spring (7), and gear (8).

When replacing the switch shaft, note that the shaft will fit the switch gang slots in only one position; turn the shaft before inserting so that the locating button will pass through the keyed side of the slots. Note also that the brass bearing just behind the switch shaft gear determines the forward position of the gear, Insert the bushing just far enough into the index plate hub so that the shaft gear meshes snugly with the scale gear; then tighten the set screw.

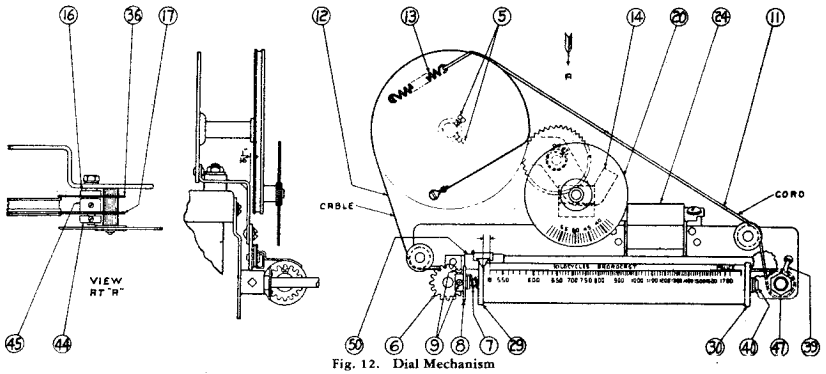

Fig. 12. Dial Mechanism

4. Locating Scale

Loosen the two gear set screws (9). Rotate the scale backward until there is slight tension on spring (7) with the pointer indicating on the Band "A" scale. With the frequency band switch in the Band "A" position, place gear (8) in mesh with the gear on part (6) and tighten the two set screws (9).

5. Replacing Drive Cord and Drive Cable

The position of the dial scale pointer with respect to the tuning condenser drum is held fixed by a special metal braid cable (12) connecting the drum with guide (50). Tension is maintained on the cable through the drum spring (13) and drive cord (11). To replace either the drive cable or the drive cord, remove the dial scale for convenient access to guide (50). Unhook spring (13) from its drum tab to release tension. Unhook the cable or cord from guide (50) and unwind from the pulleys and drum. To replace the cable or cord, rethread to agree with Fig. 12, and rehook drum spring (13) as shown.

6. Replacing Reduction Drive

To replace the reduction drive, unhook spring (13), loosening the drive cord. Unscrew nut (47) and remove drive. Replace with new drive and rehook drive cord.

7. Setting Scale Pointer

The scale pointer is soldered to the slider (50). To set the pointer mechanically, turn the tuning condenser rotor so that the plates are fully engaged, and solder the pointer to indicate a point 3/32 in. to the left of the extreme left-hand mark on the Band "B" scale.

8. Replacing Dial Lamps

The dial lamp sockets are easily accessible by lifting them clear of the dial mechanism. Lamps may then be replaced in their sockets. After replacing lamps, slide the socket clip back onto the mounting bracket. Be sure the sockets are quite clear of other metal parts. The tuning meter lamp is easily replaced by merely unscrewing it from its socket at the rear of the meter.

9. Replacing Tuning Meter

In case of damage to, or defect within, the tuning meter (24), the meter should be replaced rather than an attempt made to repair it. The meter is replaceable as a unit by removing its two mounting screws and unsoldering the meter leads and meter lamp leads.

10. Precision Tuning Indicator

The precision tuning indicator dial and gear assembly is illustrated at the left of Fig. 12. This assembly is removable as a unit by removing the two mounting screws which fasten its bracket (14) to the tuning condenser frame. The dial and pinion assembly (20) is held on its shaft by a small horseshoe spring washer which should be pried off to replace this assembly. The drive gear (17) and backlash gear (36) may be removed by loosening the set screws on collars (44) and (45), which hold them in place.

When replacing the complete precision tuning assembly, the tuning condenser plates should be fully disengaged. Refasten the assembly to the tuning condenser frame, but before tightening the mounting screws, and before meshing the drum gear sector with the precision dial drive gear, place an initial tension on the backlash spring (16) by rotating the precision dial about two revolutions clockwise from the position in which the spring holds it when unwound. Maintaining this tension on the backlash spring, mesh the gears.

PHONOGRAPH SERVICE DATA
A-208 & A-208E ONLY

Replacing Transformer

When installing a new phonograph input transformer, T4, first make all connections without screwing the new transformer to the cabinet. Then, with the power on and the Phono-Radio switch turned to Phono, rotate the transformer until the position is found in which hum is reduced to a minimum. The transformer should then be mounted permanently in this position.

AUTOMATIC RECORD EJECTOR

The record-changing mechanism is designed to be simple and fool-proof. Under normal operating conditions, service difficulties should be negligible. Occasionally, however, certain adjustments may be required. These adjustments are illustrated and explained in Fig. 13.

It is important when servicing the automatic mechanism, to have it placed on a level support. It is also important to refrain from forcing the mechanism if there is a tendency to bind or jam, since bent levers and possibly broken parts may result.

The tip of the record ejector is adjustable in relation to the turntable spindle, the two being exactly coaxial when properly adjusted. To align the tip, remove the rubber silencer of the ejector assembly, loosen ejector tip retaining nut and slide the tip assembly to the position where it is in true line with the axis of the turntable spindle. This adjustment may be simplified by placing several records on the turntable, depressing the spindle through the top record hole and lining up the ejector tip in the spindle hole of the record.

To insure that the ejector tip rotates freely, apply a slight amount of oil to the shank of the tip at the point where it is in contact with the ball bearing.

MAGNETIC PICKUP

The pickup used in the phonograph unit is of an improved design, having several variations from the usual type of pickup. The magnetic assembly is one rigid piece. The horseshoe magnet is solidly welded to the pole pieces and is irremovable. There is a centering spring attached to the armature to maintain proper adjustment and provides a damping effect on the movement of the armature. A neutralizing coil is mounted in the magnet assembly in such manner that it balances out hum induced by stray magnetic fields but does not affect the audio signal. The frequency response is uniform over a wide range.

Service operations which may be necessary on the pickup are as follows:

Centering Armature

Refer to Fig. 14 showing the pickup inner structure. The armature is shown in its proper relation to the magnet pole pieces, *i.e.*, exactly centered. Whenever this centering adjustment has been disturbed, the screws A, B, and C should be loosened and the armature clamp adjusted to the

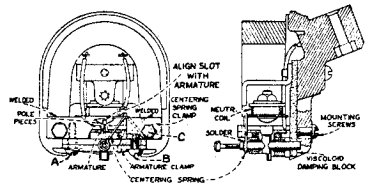

Fig. 14. Details of Pickup

point where the vertical axis of the armature is at right angles to the horizontal axis of the pole pieces, and centered between them. This centering operation may be facilitated by inserting a small rod or nail into the armature needle hole, using it as a lever to test the angular movement of the armature. The limitations of the movement in each direction will be caused by the armature striking the pole pieces. The proper adjustment is obtained when there is equal angular displacement of the armature and adjustment rod or nail to each side of the vertical axis of the magnet and coil assembly. The screws A and B should then be secured, observing care not to disturb the adjustment of the armature clamp. Then place the pickup in a vise and secure the centering spring-clamp by means of the screw C, allowing the centering spring to remain in the position at which the armature is exactly centered between the pole pieces. With a little practice, the correct adjustment of the armature may be readily obtained. The air gap between the pole pieces and the armature should be kept free from dust, filings, and other such foreign materials which would obstruct the movement of the pickup armature.

A-205,A-208 Damping Block A-205E,A-208E

The viscoloid block which is attached to the back end of the armature shank serves as a mechanical filter to eliminate undesirable resonances and to cause the frequency response to be uniform. Should it be necessary to replace this damping block, it may be done by removing the armature and viscoloid assembly from the mechanism and taking off the old viscoloid block. The surface of the armature which is in contact with the viscoloid should be thoroughly cleaned with fine emery cloth and then inserted into the new block so that it occupies the same position as it did originally. Make certain that the block is in correct vertical alignment with the armature. The hole in the new viscoloid block is somewhat smaller than the diameter of the armature in order to permit a snug fit. With the viscoloid aligned on the armature, heat should be applied to the armature (viscoloid side) so that the viscoloid block will fuse at the point of contact and become rigidly attached to the armature. A special-tip soldering iron constructed as shown in Fig. 15 will be found very useful in performing this operation. The iron should be applied only long enough to slightly melt the block and cause a small bulge on both sides. The pickup should then be carefully reassembled and the armature centered as previously explained.

Fig. 15. Special Soldering-iron Tip

Replacing Coils

Whenever there is defective operation due to open or shorted pickup coils, these coils should both be replaced. The method of replacement will be obvious upon inspection of the pickup assembly and by study of the cut-away illustrations. It is important to readjust the armature as previously explained after reassembly of the mechanism. It is also necessary to have the hum and signal coils mounted in proper relation to each other in order that there may be the intended neutralization between them. Make certain that the slot in the center screw of the neutralizing coil is aligned directly over the armature tip, as illustrated. Only rosin core solder should be used for soldering the coil leads in the pickup. This same type of solder should be used when necessary for soldering the centering spring to the armature.

Magnetizing

Loss of magnetization will not usually occur when the pickup has received normal care, due to the fact that the magnet and pole pieces are one unit and the magnetic circuit remains closed at all times. When the pickup has been mishandled, subjected to a strong a-c field, jolted, or dropped, there may be an appreciable loss of magnetic strength, in which case it will be necessary to remagnetize the entire structure. This should be done by placing the pickup assembly on the poles of a standard pickup magnetizer and charging the pickup in accordance with the instructions accompanying the magnetizer. It is preferable to check the polarity of the pickup magnet and to remagnetize it so that the same polarity is maintained.

REPLACEMENT PARTS

A-205,A-208

† Indicates Parts Used In Model A-208 Only.
* Indicates Parts Used In Model A-205 Only.

RECEIVER CHASSIS ASSEMBLIES

Stock No.	Description	List Price
RA-402	ARM—Crank arm on changeover shaft for long switching link, pkg. 2	$0.10
RA-403	ARM—Crank arm on changeover shaft for short switching link, pkg. of 2	.10
RB-006	BOARD—Terminal board near 10 kc filter trimmer condensers	.15
RB-009	BOARD—Terminal board on same bracket as S7	.15
RB-019	BOARD—Three lug terminal board on rear apron near L3	.10
RB-030	BOARD—Terminal board inside AVC 6K7 socket shield	.10
RB-031	BOARD—Terminal board inside 1st and 2nd signal I.F. 6K7 socket shields	.10
RB-033	BOARD—1st, 2nd, 3rd and AVC I.F. Transformer Assembly Board	.35
RB-034	BOARD—Eight lug terminal board on rear chassis apron	.15
†RB-036	BOARD—Phonograph Connector Terminal Board	.20
RB-128	BRACKET—Treble tone control mounting bracket, pkg. of 2	.10
RB-129	BRACKET—Supports switch S10	.10
RB-130	BRACKET—Bracket supporting switch S7, and changeover shaft	.10
RB-131	BRACKET—Volume control mounting bracket, pkg. of 2	.10
RB-132	BRACKET—Bracket for mounting S8 and C16	.15
RC-033	CAPACITOR—.01 mfd.—200 V. Paper (C72)	.25
RC-034	CAPACITOR—.01 md. 200 Volt Paper (C61, C73, C94, C95, C97)	.25
RC-072	CAPACITOR—.05 mfd. 200 V. Paper (C53, C85)	.25
RC-091	CAPACITOR—.05 mfd. 400 V. Paper (C52, C55, C68, C93)	.30
RC-096	CAPACITOR—.1 mfd. 200 V. Paper (C46, C63, C74, C78, C86, C87)	.30
RC-136	CAPACITOR—.25 mfd. 200 V. Paper (C47, C62)	.30
RC-150	CAPACITOR—.25 mfd. 400 V. Paper (C77)	.30
RC-178	CAPACITOR—.5 mfd. 200 Volts Paper (C54, C114)	.40
RC-180	CAPACITOR—.5 mfd. 400 V. Paper (C80)	.50
RC-211	CAPACITOR—50 mmfd. Mica (C70, C71)	.25
RC-213	CAPACITOR—50 mmfd. Low Power Factor Mica (C88, C91)	$0.25
RC-214	CAPACITOR—40 mmfd. Low Power Factor Mica (C67)	.25
RC-228	CAPACITOR—85 mmfd. Low Power Factor Mica (C65)	.25
RC-236	CAPACITOR—100 mmfd. Low Power Factor Mica (C66, C89)	.25
RC-247	CAPACITOR—185 mmfd. Low Power Factor Mica (C51, C57)	.30
RC-252	CAPACITOR—200 mmfd. Low Power Factor Mica (C50, C60)	.30
RC-259	CAPACITOR—250 mmfd. Low Power Factor Mica (C92, C96)	.30
RC-335	CAPACITOR—.001 mfd. Mica (C112)	.30
RC-350	CAPACITOR—.002 mfd. Low Power Factor Mica (C81, C83)	.35
RC-392	CAPACITOR—.005 mfd. Mica (C84)	.50
RC-520	CAPACITOR—20 mfd. 25 V.; 8 mfd. 450 V.; 16 mfd. 50 V. (C75, C79, C76)	2.60
RC-602	CAPACITOR—Permaliner Trimmer Capacitor 10-45 mmfd. (C5, C16, C48, C49, C58, C59, C64, C66, C89, C90)	.50
RC-616	CAPACITOR—10 kc Filter Padder Condenser, 600, 1200 mmfd. (C82)	.65
RC-810	CABLE—Receiver Chassis Power Cable with Plug	2.40
RC-979	CONDUIT—Concentric Transmission Conduit, from S8 to S10	.35
*RC-980	COVER—Cabinet Back Cover Screen	3.75
RC-981	CLAMP—Cable Clamp (near S7), pkg. of 5	.10
RC-982	CLAMP—I.F. Permaliner Trimmer Mounting Clamp, pkg. of 4	.15
RC-983	CUP—Cup for Mounting Permaliner, pkg. of 4	.10
†RC-985	COVER—Cabinet Back Cover Screen	5.95
*RE-008	ESCUTCHEON	1.10
†RE-009	ESCUTCHEON—Escutcheon Front Panel and Under Block	13.15
RG-005	GASKET—Felt Speaker Gasket, pkg. of 2	.25
*RI-003	INSULATOR—Escutcheon Shaft Insulator Bushing, pkg. of 10	.40
RK-002	KNOB—Control Knobs, pkg. of 5	.50
RL-306	COIL—Signal Diode Choke Coil (L40 and L41)	1.15
RL-307	COIL—Bass Tone Control Reactor (L42)	3.40
RL-308	COIL—10 kc Filter Reactor (L44)	3.95
RL-309	COIL—10 kc Filter Reactor (L43)	3.95
RL-401	COIL—1st I. F. Transformer Coil (L32, L33)	$0.95
RL-402	COIL—2nd I. F. Transformer Coil (L34, L35)	.95
RL-403	COIL—3rd I. F. Transformer Coil (L36, L37)	1.00
RL-404	COIL—AVC I.F. Transformer Coil (L38, L39)	1.10
RL-601	COIL—Wave Trap Coil (L3)	.80
RL-906	LINK—Short Switching Link for S9	.10
RL-907	LINK—Long Switching Link for S10	.15
RM-002	METER—Tuning Meter (48)	2.70
*RN-001	NUT—Escutcheon Mounting Nut, pkg. of 10	.45
*RP-014	PLATE—Escutcheon Mounting Plate, pkg. of 2	.25
RP-034	PLUG—Receiver Chassis 8 prong Plug	.20
*RP-035	PLATE—Control Knob Name Plate	.35
RP-036	PIN—Taper Pin in Front End of Changeover Shaft, pkg. of 5	.10
RR-007	RESISTOR—350 ohm ¼ watt (R24), pkg. of 5	.70
RR-010	RESISTOR—1000 ohm ¼ watt Carbon (25), pkg. of 5	.70
RR-016	RESISTOR—5000 ohm ¼ watt Carbon (R-17, R-23, R-33), pkg. of 5	.70
RR-022	RESISTOR—600 ohm ¼ watt Carbon (R16, R32), pkg. of 5	.70
RR-035	RESISTOR—50,000 ohm ¼ watt Carbon (R46), pkg. of 5	.70
RR-042	RESISTOR—75,000 ohm ¼ watt Carbon (R27, R37, R38), pkg. of 5	.60
RR-049	RESISTOR—100,000 ohm ¼ watt Carbon (R15, R28), pkg. of 5	.70
RR-054	RESISTOR—150,000 ohm ¼ watt Carbon (R41), pkg. of 5	.70
RR-064	RESISTOR—.5 megohm ¼ watt Carbon (R31), pkg. of 5	.60
RR-068	RESISTOR—2 megohm ¼ watt (R19, R30), pkg. of 5	.60
RR-163	RESISTOR—2000 ohm ½ watt Carbon (R14, R18, R26, R35, R42, R48), pkg. of 5	.70
RR-202	RESISTOR—1 megohm ½ watt Carbon (R47), pkg. of 5	.60
RR-281	RESISTOR—40,000 ohms 2 watt Carbon (R43)	.30
RR-627	RESISTOR—3700 ohms 10 watt (R21, R22)	.45
RR-628	RESISTOR—5000 ohm 10 watt (R44)	.45
RR-631	RESISTOR—10,000 ohm 10 watt (R49)	.45
RR-712	RESISTOR—1270 ohm 20 watt (R20)	.45
RR-900	REFLECTOR—Dial Light Reflector	.15
RS-126	SHIELD—AVC Diode Socket Shield Can	.15
RS-127	SHIELD—Signal Diode Socket Shield Can	.15
RS-128	SHIELD—1st I.F. 6K7 Tube Socket Shield Can	.30
RS-129	SHIELD—2nd I.F. 6K7 Tube Socket Shield Can	.30
RS-130	SHIELD—AVC 6K7 Tube Socket Shield Can	.30
RS-131	SHIELD—1st I.F. Transformer Shield Can	.30
RS-132	SHIELD—2nd I.F. Transformer Shield Can	.30
RS-133	SHIELD—Shield Can for 3rd I.F. Transformer, AVC I.F. Transformer and Signal Diode Detector Plate Choke	.30
*RS-134	SHIELD—Base Shield with Mounting Feet	2.75
†RS-135	SHIELD—Base Shield with Mounting Feet	2.80
RS-200	SOCKET—Eight Pin Tube Socket, pkg. of 5	.75
RS-318	SWITCH—Toggle Switch near Sentry Box (S8)	1.00
RS-319	SWITCH—Toggle Switch next to AVC 6K7 Socket Shield (S10)	1.90
RS-320	SWITCH—Rear Hi-Fidelity Changeover Toggle Switch (S7)	2.45
RS-413	SPRING—Spring on Back End of Changeover Shaft, pkg. of 4	.10
RS-414	SPRING—Spring on Long and Short Switching Links, pkg. of 4	.10
*RS-802	SENSITIVITY CONTROL—20,000 ohm Resistor (R34)	.95
†RS-803	SENSITIVITY CONTROL—20,000 ohm (R34)	.95
*RS-903	SHAFT—High Fidelity Switch Shaft Assembly	4.75
†RS-904	SHAFT—High Fidelity Switch Shaft Assembly	4.75
*RT-702	TONE CONTROL—Bass Tone Control 250,000 ohm Potentiometer (R45)	.95
*RT-706	TONE CONTROL—Treble Tone Control and Power Switch 100,000 ohm Potentiometer (R50, S11)	1.20
RT-707	TUNING METER CONTROL—4000 ohm Potentiometer (R29)	.90
†RT-708	TONE CONTROL—Bass Tone Control 250,000 ohm Potentiometer (R45)	.95
†RT-709	TONE CONTROL—Treble Tone Control Switch 100,000 ohm Potentiometer (R50, S11)	1.25
*RV-010	VOLUME CONTROL—3 Section (R1, R36, R40)	4.30
†RV-011	VOLUME CONTROL—3 Section (R1, R36, R40)	4.50
*RW-002	WINDOW—Dial Window	.15
†RW-003	WINDOW—Dial Window	.35
RW-101	WASHER—Felt Washer for Control Shafts, pkg. of 10	.45
RX-004	SCREW ASSEMBLY—Chassis Mounting Screw Assembly	.10

"SENTRY BOX" ASSEMBLIES

Stock No.	Description	List Price
RB-010	BOARD—Connection Terminal Boards on Top Side of Sentry Box	.10
RB-012	BOARD—Ant. and Ground Terminal Board	.15
RB-127	BRACKET—Toggle Switch Mounting Bracket for S9	.15
RC-034	CAPACITOR—.01 mfd. 200 V. Paper (C17)	.25
RC-072	CAPACITOR—.05 mfd. 200 V. Paper (C14, C29)	.25
RC-096	CAPACITOR—.1 mfd. 200 V. Paper (C9, C24)	.30
RC-123	CAPACITOR—.1 mfd. 400 V. Paper (C21, C40)	.35
RC-136	CAPACITOR—.25 mfd. 200 V. Paper (C11, C27)	.30
RC-202	CAPACITOR—4 mmfd. Low Power Factor Mica (C6, C19)	.25
RC-211	CAPACITOR—50 mmfd. Low Power Factor Mica (C31, C42)	.25
RC-212	CAPACITOR—40 mmfd. Low Power Factor Mica (C32)	.25
RC-228	CAPACITOR—85 mmfd. Low Power Factor Mica (C15)	.25
RC-289	CAPACITOR—400 mmfd. Mica (C35)	.25
RC-340	CAPACITOR—1230 mmfd. Low Power Factor Mica (C38)	.50
RC-349	CAPACITOR—.002 mfd. Low Power Factor Mica (C10, C13, C23, C25, C28, C41)	.30
RC-353	CAPACITOR—3200 mmfd. Mica (C43)	.70
RC-602	CAPACITOR—10-45 mmfd. Permaliner Trimmer Capacitor (C33, C34, C36)	.50
RC-603	CAPACITOR—5-25 mmfd. Permaliner Trimmer Capacitor (C4, C7, C8, C12, C18, C20, C22, C26, C30, C37, C39, C44, C45)	.55
RC-702	CONDENSER—Three Gang Tuning Condenser	4.25
RG-001	GRID GAP, pkg. of 5	.10
RG-100	GUARD—Terminal Strip Guard	.15
RL-003	COIL—Ant. Coil Band A (L1 and L2)	1.00
RL-014	COIL—Ant. Coil Band B (L4 and L5)	.75
RL-015	COIL—Ant. Coil Band C (L6, L7)	.65
RL-016	COIL—Ant. Coil Band D (L8 and L9)	.60
RL-103	COIL—R. F. Coil Band A (L12 and L13)	1.60
RL-116	COIL—R. F. Coil Band B (L14 and L15)	1.05
RL-117	COIL—R. F. Coil Band C (L16 and L17)	.65
RL-118	COIL—R. F. Coil Band D (L18 and L19)	.60
RL-119	COIL—R. F. Coil Band E (L20 and L21)	.60
RL-207	COIL—Osc. Coil Band A (L22 and L23)	.70
RL-217	COIL—Osc. Coil Band B (L24 and L25)	.85
RL-218	COIL—Osc. Coil Band C (L26 and L27)	.60
RL-219	COIL—Osc. Coil Band D (L28 and L29)	.60
RL-220	COIL—Osc. Coil Band E (L30 and L31)	.85
RR-001	RESISTOR—350 ohm ¼ watt Carbon (R2), pkg. of 5	.70
RR-015	RESISTOR—5000 ohm ¼ watt Carbon (R3, R12), pkg. of 5	.70
RR-022	RESISTOR—600 ohm ¼ watt Carbon (R13), pkg. of 5	.70
RR-036	RESISTOR—50,000 ohm ¼ watt Carbon (R5, R10), pkg. of 5	.70
RR-049	RESISTOR—100,000 ohm ¼ watt Carbon (R4, R6, R8), pkg. of 5	.70
RR-163	RESISTOR—2000 ohm ½ watt Carbon (R7, R9), pkg. of 5	.70
RR-192	RESISTOR—50,000 ohm ½ watt Carbon (R11), pkg. of 5	.70
RR-304	RESISTOR—Dial Light Series Resistor .8 ohm (R68), pkg. of 5	.70
RS-111	SHIELD—Osc. Compartment Shield Can	1.20
RS-112	SHIELD—R.F. Compartment Shield Can	1.25
RS-125	SHIELD—Ant. Compartment Shield Can	1.25
RS-303	SWITCH—Osc., R. F. or Ant. Band Change Switch (S5, S6, or S3, S4, or S1, S2)	1.20
RS-317	SWITCH—Toggle Switch (S9)	1.05
RX-002	CUSHION ASSEMBLY—Tuning Condenser Mounting Cushions, Nut and Washers	.10

POWER UNIT CHASSIS ASSEMBLIES

Stock No.	Description	List Price
RB-008	BOARD—Two Lug Terminal Board	$0.10
RB-032	BOARD—7 Lug Terminal Board	.15
RC-031	CAPACITOR—.008 mfd. 1500 V. Paper (C99, C100)	.25
RC-099	CAPACITOR—.1 mfd. 200 V. Paper (C98)	.25
RC-196	CAPACITOR—.5 mfd. 500 V. Paper (C115, C116)	.75
RC-296	CAPACITOR—.0005 mfd. 500 V. Mica (C102, C103)	.25
RC-411	CAPACITOR—30 mfd. 510 V. Wet Electrolytic (C101, C106, C110)	1.55
RC-512	CAPACITOR—50 mfd. 50 V. Dry Electrolytic (C107)	1.75
RC-515	CAPACITOR—16 mfd. 500 V. Dry Electrolytic (C104, C105)	2.70
RC-751	CAPACITOR—Twin .01 mfd. Line Capacitors C108 and C109)	.45
†RC-813	CABLE—Cable and female plug for connection to phono. lamp cable	.90
†RC-814	CABLE—Cable and female plug for connection to phonograph motor	.90
RC-859	CORD—Power Cord	.60
RC-978	COVER—Fuse Cover	.10
RF-009	FOOT—S.P.U. Chassis Mounting Foot Assembly	.25
RL-304	COIL—Filter Reactor (L11)	7.45
RL-305	COIL—Speaker Filter Coil (L10)	.60
RR-012	RESISTOR—500 ohm ¼ watt Carbon (R53, R64, R55, R56, R57, R58) (Pkg. of 5)	.70
RR-309	RESISTOR—15 ohm 1 watt Flexible (R70, R71) (Pkg. of 5)	.90
RR-628	RESISTOR—5000 ohm Vitreous Enamel (R-51, R-59)	.45
RR-705	RESISTOR—50 ohm Vitreous Enameled (R61, R62, R63, R64, R65, R66)	.40
RR-708	RESISTOR—90 ohm Vitreous Enameled Resistor (R60)	.75
RR-709	RESISTOR—450 ohm Vitreous Enamel (R59)	.40
RR-710	RESISTOR—40 ohm Center Tapped Candohm (R67)	.35
RR-711	RESISTOR—15,000 ohm Vitreous Enamel (R72, R73)	.50
RR-851	RECEPTACLE—Fuse Receptacle	.45
RS-161	SHIELD—"T" shaped Partition Shielding T1 and T2	.30
RS-207	SOCKET—Six Prong Socket for Speaker Plugs	.35
RS-208	SOCKET—8 Prong Socket Receiver Chassis Plug	.25
RS-209	SOCKET—8 Prong Socket for 6F6 Power Tubes, (Pkg. of 5)	.80
RT-191	TRANSFORMER—Power Transformer 105-130 V. 60 C. (T3)	25.90
RT-192	TRANSFORMER—Power Transformer 105-130 V., 25-60 C. (T3)	37.50

©John F. Rider, Publisher

©John F. Rider, Publisher

Stock No.	Description	List Price
RT-193	TRANSFORMER—Power Transformer 105-130 and 200-250 V. 40-60 cycles (T3)	31.80
RT-410	TRANSFORMER—Output Transformer (T1)	10.25
RT-503	TRANSFORMER—Interstage Transformer (T2)	10.30
RW-103	WASHER—Insulating Washer for Mounting Capacitor (C106) (Pkg. of 10)	.20
RW-104	WASHER—Insulating Washer for Mounting C104 and C105 (Pkg. of 4)	.15

DIAL MECHANISM ASSEMBLY

Stock No.	Description	List Price
RB-114	BRACKET—Precision Tuning Indicator Bracket (14)	$0.15
RB-120	BRACKET—Dial Mechanism Supporting Post	.15
RB-125	BRACKET—Mounting Bracket Assembly	.90
RB-126	BRACKET—Dual Lamp Bracket	.25
RC-802	CABLE—Metal Braid Dial Cable (12) (Pkg. of 5)	.55–5
RC-856	CORD—Dial Cord (11) (Pkg. of 5)	.65–5
RC-954	CAP—Scale Cap Assembly Gear End (29)	.10
RC-955	CAP—Scale Cap Free End (30)	.10
RC-957	COLLAR—Microlog Retaining Split Collar (Pkg. of 5)	.10–5
RC-962	COLLAR—Precision Drive Gear Shaft Collar External (44)	.15
RC-963	COLLAR—Precision Drive Gear Shaft Collar Internal (45)	.15
RD-009	DRUM—Tuning Condenser Drive Drum & Gear Teeth	.45
RD-010	DIAL—Precision Dial and Pinion Gear (20)	$0.60
*RD-022	DRIVE—Differential Reduction Drive	1.00
RD-023	DIAL—Cylindrical Dial Scale	.65
†RD-026	DRIVE—Differential Drive	1.00
RF-200	FASTENER—Dial Fastener (40) (Pkg. of 10)	.10–10
RG-002	GEAR—Dial Gear Assembly and Set Screws (8 & 9) 2 Screws Fil. Hd. 4-40 x 5/32 cup pt.	.15
RG-003	GEAR—Precision Dial Drive Gear (17)	.15
RG-004	GEAR—Precision Dial Backlash Gear (36)	.15
RG-200	GUIDE—Dial Pointer Guide (50) (Pkg. of 5)	.15–5
RI-004	INDEXING PLATE—Front Plate and Set Screw for Band Switch Shaft	.50
*RP-033	POINTER—Dial Pointer (Pkg. of 2)	.20–2
†RP-038	POINTER—Dial Pointer (Pkg. of 2)	.15–2
RS-401	SPRING—Drum Spring (13) (Pkg. of 2)	.10–2
RS-402	SPRING—Precision Dial Backlash Spring (16)	.15
RS-403	SPRING—Dial Scale Spring (7) (Pkg. of 2)	.10–2
RS-500	STUD—Precision Dial Gear Stud	.20
†RS-905	SHAFT—Round and Flat Shafts and Gear for Band Change Switch (6)	.45
*RS-906	SHAFT—Round and Flat Shafts and Gear for Band Change Switch (6)	.40

SPEAKER ASSEMBLIES

Stock No.	Description	List Price
RB-035	BOARD—Speaker Terminal Board Assembly	$0.10
RC-811	CABLE—Speaker Cable	.40
RC-903	CONE—11" Type Cone and Voice Coil and Gasket	1.50
RC-960	CLAMP—Speaker Cable Clamp	.10
RC-984	CUSHION—Rubber Speaker Mounting Cushion (Pkg. of 8)	.30
RP-037	PLUG—6 Pin Speaker Plug	.25
RR-801	RING—Cone Clamping Ring (Pkg. of 4)	.40
RS-021	SPEAKER—Single 11" Type Reproducer Complete	17.50
RX-014	SCREW ASSEMBLY—Nuts, Bushings, and Washers for Mounting One Speaker	.50

PHONOGRAPH REPLACEMENT PARTS, RECORD CHANGING MECHANISM

Stock No.	Description	List Price
RC-965	CAM—Cam and Gear Assembly	$1.18
RC-966	CLUTCH—Trip Lever Friction Clutch	.30
RC-967	COVER—Metal Cover for Trip Lever and Friction Finger Assembly	.36
RF-400	FINGER—Manual Index Lever Finger Assembly	.25
RF-401	FINGER—Friction Finger Assembly	.32
RL-901	LEVER—Manual Index Lever—Less Pin	.62
RL-902	LEVER—Main Lever and Link Assembly	2.10
RL-903	LEVER—Main Spring Lever	.42
RL-904	LEVER—Pick-up Arm Cable Lever Assembly—Comprising Lever with Cable, Screw, Spring and Nut	.40
RL-905	LEVER—Trip Lever and Friction Clutch Assembly	.94
RP-018	PAWL—Trip Pawl Assembly	.40
RP-019	PLATE—Eject Arm Actuating Plate Assembly	.50
RS-405	SPRING—Actuating Spring—pkg. of 10	.24
RS-406	SPRING—Cable Lever Tension Spring—pkg. of 10	.44
RS-407	SPRING—Manual Index Lever Finger Tension Spring—pkg. of 10	.30
RS-408	SPRING—Main Spring Lever Tension Spring—pkg. of 10	.38
RS-409	SPRING—Trip Lever Latch Plate Tension Spring—pkg. of 10	.30
RS-850	SCREW—Cable Lever Screw and Nut, pkg. of 10	.60
RS-851	SCREW—Manual Index Lever Finger Set Screw—pkg. of 10	.20
RS-852	SCREW—Trip Lever Clutch Tension Adjustment Screw—pkg. of 10	.22
RS-853	SCREW—Special Screw Used to Fasten Main Lever and Link Assembly Bushing—pkg. of 10	.30
RS-950	SPACER—Pick-up Arm Mounting Spacer	.28
RW-100	WASHER—Spring Washer "U" Type—pkg. of 10	.25

PICK-UP AND ARM ASSEMBLIES

Stock No.	Description	List Price
RA-401	ARM—Pick-up Arm Complete—Less Pick-up Mounting Screw, Escutcheon and Pick-up Unit	$4.80
RA-500	ARMATURE—Pick-up Armature	.72
RB-600	BACK—Pick-up Back	.52
RC-806	CABLE—Pick-up Arm Operating Cable—pkg. of 5	1.00
RC-971	COVER—Pick-up Front Cover	.22
RC-972	COVER—Pick-up Back Cover with Mounting Screws	.14
RD-100	DAMPER—Pick-up Damper—pkg. of 5	.65
RL-800	COIL—Pick-up Coil (L-29)	.80
RL-801	COIL—Pick-up Hum Bucking Coil (L-32)	.60
RP-021	PICK-UP—Pick-up Unit Complete	4.80
RS-856	SCREW—Pick-up Front Cover Screw—pkg. of 10	.42
RS-857	SCREW—Pick-up Needle Screw—pkg. of 10	$0.42
RX-007	SCREW ASSEMBLY—Screw, Nut and Washer for Mounting Pick-up to Arm—pkg. of 10	.40

MOTOR BOARD ASSEMBLIES

Stock No.	Description	List Price
RC-973	COVER—Turntable Cover	$0.88
RE-006	EXCUTCHEON—Index Escutcheon Engraved Manual—12-10	.44
RN-002	NUT—Cap Nut for Motor Board Suspension Assembly, pkg. of 4	.40
RP-022	Manual Index Pin	.42
RR-902	ROLLER—Pick-up Arm Cable Guide Roller—Comprising Bracket, Roller and Guide Pin	.34
RR-903	REST—Pick-up Rest	.14
RS-307	SWITCH—Motor Switch, Toggle Type (S-9)	.72
RT-901	TURNTABLE—Turntable Complete	2.90
RX-008	SPRING ASSEMBLY—Suspension Spring, Washer and Bolt Assembly for Motor Board—Comprising One Bolt, Two Cup Washers, Two Springs, Two "C" Washers and One Cap Nut	.42

AUTOMATIC SWITCH ASSEMBLIES

Stock No.	Description	List Price
RC-974	COVER—Motor Switch Cover	$0.26
RP-023	PLATE—Automatic Brake Latch Plate—pkg. of 5	.40
RS-308	SWITCH—Automatic Switch Complete	1.90
RS-309	SWITCH—Motor Switch	.75
RS-412	SPRINGS—Automatic Brake Springs—pkg. of 2	.50

MISCELLANEOUS ASSEMBLIES

Stock No.	Description	List Price
RB-020	BOARD—Terminal Board for Pick-up Leads	$0.15
RB-510	BOX—Used Needle Box	.40
RB-601	BASE—Phonograph Compartment Lamp Base	.55
RC-807	CABLE—Motor Connection Cable	.50
RC-812	CABLE—Phonograph Input Transformer Cable	.45
RC-975	COVER—Cap Cover for RP-028	.25
RK-003	KNOB—Radio-Phono Switch Knob	.25
RP-017	PLATE—Radio-Phono Switch Metal Nameplate	.25
RP-024	PLUG—Two-contact Female Connector Plug—Round	.60
RP-025	PLUG—Two Contact Male Connector Plug—Round	.20
RP-026	PLUG—Two-contact Female Connector Plug—Flat	.45
RP-027	PLUG—Two-contact Male Connector Plug—Flat	.45
RR-850	RECEPTACLE—New Needle Card Holder	.38
RS-310	SWITCH—Radio-phono Switch (S-10)	1.65
RS-502	SHADE—Phonograph Compartment Lamp Shade	.16
RT-601	TRANSFORMER—Phonograph Input Transformer includes R-69, C-113	5.42

MOTOR ASSEMBLIES

Stock No.	Description	List Price
RM-100	MOTOR—105-130 volts, 25 cycles (M-1)	$36.48
RM-102	MOTOR—105-130 volts, 50 cycles (M-1)	25.88
RM-103	MOTOR—105-130 volts, 60 cycles (M-1)	25.88
RX-006	SPRING ASSEMBLY—Motor Mounting Spring Washer and Stud Assembly—Comprising Six Springs, Six Cup Washers, Three Spring Washers and Three Studs	.58

EJECT ARM ASSEMBLIES

Stock No.	Description	List Price
RA-400	ARM—Eject Arm Complete	$0.82
RB-300	BALL—1/8-in. Diameter Steel Ball—pkg. of 10	.20
RB-301	BALL—3/8-in. Diameter Steel Ball—pkg. of 20	.25
RB-121	BRACKET—Eject Arm Bracket	1.72
RB-400	BEARING—Ejector Tip Bearing and Nut	.32
RC-968	COLLAR—Eject Arm Shaft Collar and Set Screw	.24
RC-969	COVER—Eject Arm Cover	1.52
RC-970	CUSHION—Counter Balance Roller Cushion—Located Inside of Eject Arm	.14
RP-020	POST—Vertical Adjustment Post—Located on Eject Arm Bracket	.30
RR-901	ROLLER—Eject Arm Counter Balance Roller—Located Inside of Eject Arm	.45
RS-410	SPRING—Eject Arm Bracket Spring—pkg. of 10	.30
RS-411	SPRING—Ejector Tip Spring—pkg. of 10	.42
RS-501	SILENCER—Ejector Tip Silencer	.14
RS-854	SCREW—No. 6-32 3/16-in. Square Head Set Screw for Eject Arm Collar—pkg. of 10	.25
RS-855	SCREW—No. 8-36 3/32-in. Special Screw for Eject Arm Tip Center Adjustment—pkg. of 10	.14
RS-902	SHAFT—Eject Arm Vertical Action Shaft and Collar Assembly	.15
RT-900	TIP—Ejector Tip with Tip Center, Adjusting Screw and Cap	.32
RY-001	YOKE—Eject Arm Yoke Assembly	.94

MODELS A-205E, A-208E Specifications — GENERAL ELECTRIC CO. — "Colorama" Data Voltage

MODELS A-205E AND A-208E

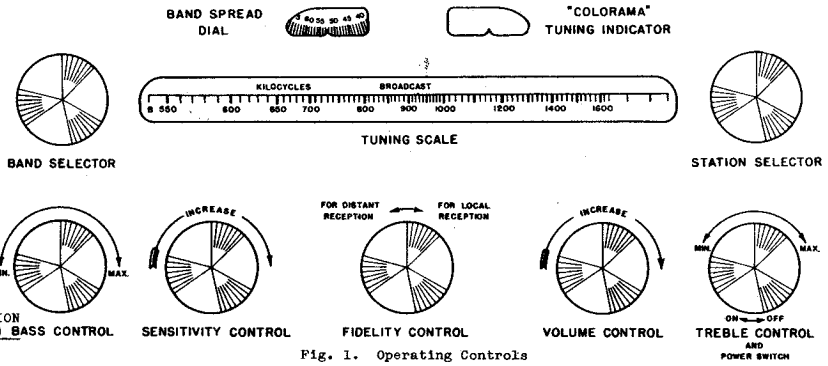

Fig. 1. Operating Controls

PHYSICAL SPECIFICATIONS

Model	A-205E	A-208E
Height	46 5/16 in.	40 1/16 in.
Width	33 5/8 in.	53 1/4 in.
Depth	18 11/16 in.	21 5/16 in.
Weight Packed	239 lb	430 lb

Tuning Control Drive Ratio
- Fast Tuning Drive Ratio. . . 5½ to 1
- Slow Tuning Drive Ratio. . . 55 to 1
- Band Spread Dial Ratio . . . 12 to 1

ELECTRICAL SPECIFICATIONS

RATING LABEL	POWER SUPPLY VOLTS	FREQUENCY (CYCLES)	POWER CONSUMPTION (WATTS)
A	105-130	60	325

Tuning Frequency Range
- Band "A" ..... 140 - 410 K.C.
- Band "B" ..... 540 - 1650 K.C.
- Band "C" ..... 1650 - 5450 K.C.
- Band "D" ..... 5450 - 18,000 K.C.
- Band "E" ..... 18,000 - 41,000 K.C.

Intermediate Frequency ..... 465 K.C.

Electrical Power Output
- Low frequency audio channel output ..... 40 Watts
- High frequency audio channel output ..... 10 Watts

Loudspeakers - Electrodynamic
- Low frequency audio channel .... 2 speakers
  - Cone 10½-inch
  - Total Series Impedance ..... 12 ohms at 400 cycles
- High frequency audio channel ... 1 speaker
  - Cone 8-inch
  - Voice coil impedance ..... 5.5 ohms at 400 cycles

Phonograph Pickup, Model A-208E Only
- Viscoloid Damped
- Pickup Coil Impedance ..... 4.6 ohms at 1000 cycles

Record Changer, Model A-208E Only
- Record Ejector Type
- Capacity: Nine 10-in. records or eight 12-in. records
- Turntable Speed: 78 Rpm
- Time to complete record-changing cycle: 4½ seconds

Tubes
R.F. Amplifier.....6K7 Super Control Amplifier
Converter .....6L7 Pentagrid Mixer Amplifier
Oscillator ..... 6C5 Low Mu Triode
1st I.F. Amp (Select.)... 6K7 Super Control Amp
2nd I.F. Amp (Select.)... 6K7 Super Control Amp
1st I.F. Amp (Fidelity).. 6K7 Super Control Amp
Detector, A.V.C. (Fidelity)..... 6H6 Twin Diode
Detector, Color Tuning Amp
A.V.C. (Select.).... 6B8 Duplex-diode Pentode
1st Audio Amp
(Hi.freq. channel)..... 6C5 Low Mu Triode
2nd Audio Amp
(Hi.freq. channel).... 6F6 (Triode connected)
1st Audio Amp
(Lo freq. channel)..... 6C5 Low Mu Triode
2nd Audio Amp
(Lo freq. channel) ... 6F6 (Triode connected)
Output push-pull
(Hi.freq. channel)..... 6F6 Power Amplifier
Output push-pull
(Lo freq. channel)6L6 Power Amplifier Tetrode
Power rectifiers..... 3 - 5Z4 Parallel
Dial Lamps (three)..... Mazda No. 46
Tuning Lamp (Red) RL-917
Tuning Lamp (Green) RL-918

Colorama Tuning Indicator

These receivers are equipped with a novel tuning aid located directly above the tuning scale. When no signal is being received, the indicator will be red in color, but as a station is tuned in, the indicator will change to green. Powerful stations will produce the darkest green color. When the Fidelity Control is in the "Local Reception" position, some stations may not cause the indicator to flood green. Such stations may be considered of insufficient power to be satisfactorily received in the "Local Reception" position.

For Method of Service Procedure-Sentry Box, Adjustment of Dial Mecharism, Phonograph Service DataModel A208 ONLY, Automatic Record Ejector, Automatic Record Changer Adjustments, Alignment Frequencies Visual Alignment of I F, R.F. "Sentry Box" Alignment Adjustments, Alignment of bards A, B, C, D, and E, Adjustment of Wave Trap and 10KC Trap SEE MODELS A205, A208.

Alignment of Fidelity Channel (#2)
1. Turn band selector to broadcast band position; sensitivity control to maximum; fidelity control to "Local Reception" position (clockwise).
2. Connect the vertical plates of the oscilloscope across the volume control (R-81).
3. Connect the test oscillator to the control grid of the "Fidelity" I.F. Amplifier (6K7), through a .05 mfd. capacitor.
4. Adjust the 2nd I.F. Fidelity transformer trimmers so that a symmetrical curve is obtained with a distinct dip in the center.
5. Move the test oscillator lead to the converter (6L7) control grid and adjust the 1st I.F. transformer trimmers. The curve obtained should be symmetrical and of maximum amplitude.

Alignment of Selective Channel (#1)
1. Set Fidelity control to "Distant Reception" position (counterclockwise).
2. Connect the test oscillator to the control grid of the "Selective" 2nd I.F. amplifier (6K7) and adjust the 3rd I.F. Selective channel transformer trimmers for a single, symmetrical curve of maximum amplitude.
3. Move the test oscillator lead to the control grid of the "Selective" 1st I.F. Amplifier (6K7) and adjust the 2nd I.F. Selective channel transformer trimmers.
4. Place the test oscillator lead on the control grid of the 6L7 converter and examine the curve for symmetry and height. Since the trimmers on the 1st I.F. transformer were adjusted when the Fidelity channel alignment was made, no further adjustment of these trimmers should be necessary.

Alignment of Color Tuning Transformer
1. Connect the vertical plates of the oscilloscope at the junction of R-39 and R-40, and ground.
2. Apply the test oscillator lead to the control grid of the selective 1st I.F. amplifier (6K7).
3. Adjust color tuning transformer trimmers for a sharp curve of maximum amplitude.

SOCKET VOLTAGES

	CONTROL GRID TO GROUND VOLTS D-C	CATHODE TO GROUND VOLTS D-C	SCREEN GRID TO GROUND VOLTS D-C	PLATES TO GROUND VOLTS D-C	HEATER VOLTS A-C
6K7 R.F. Amp	AVC	3	90	230	6.3
6L7 Converter	AVC	5	90	230	6.3
6C5 Oscillator	...	Grounded	..	130	6.3
6K7 1st I.F. Amp (Select.)	AVC	4	90	230	6.3
6K7 2nd I.F. Amp (Select.)	0	4	90	230	6.3
6K7 1st I.F. Amp (Fidelity)	0	4	90	230	6.3
6H6 Det. A.V.C. (Fidelity)	...	Grounded	..	...	6.3
6B8 Det. Color Tuning Amp A.V.C. (Select.)	...	Grounded	80	220	6.3
6C5 1st A.F. Amp (Hi-freq. channel)	0	5	..	125	6.3
6F6 2nd A.F. Amp (Hi-freq. channel)	0	15	160	160	6.3
6C5 1st A.F. Amp (Lo-freq. channel)	0	5	...	132	6.3
6F6 2nd A.F. Amp (Lo-freq. channel)	0	20	250	250	6.3
6F6 Output PP (Hi-freq. channel)	25	Grounded	302	290	6.3
6L6 Output PP (Lo-freq. channel)	25	Grounded	302	375	6.3
5Z4 rectifiers (3)	...	410	...	...	5.0

Line voltage 115 - no signal input - 1000 ohms per voltmeter -- dial pointer at 530 KC-Fidelity switch on "Local Reception" position - Sensitivity Control clockwise.

TUBE CURRENTS

TUBE	*6L6 OUTPUT	*6F6 OUTPUT	6F6 DRIVER	5Z4 RECTIFIER
Cathode Current	54-60 MA	33-40 MA	20-22 MA	113 MA each

*When replacing a power output tube, the cathode currents of the two output tubes should be within ten per cent of each other.

©John F. Rider, Publisher

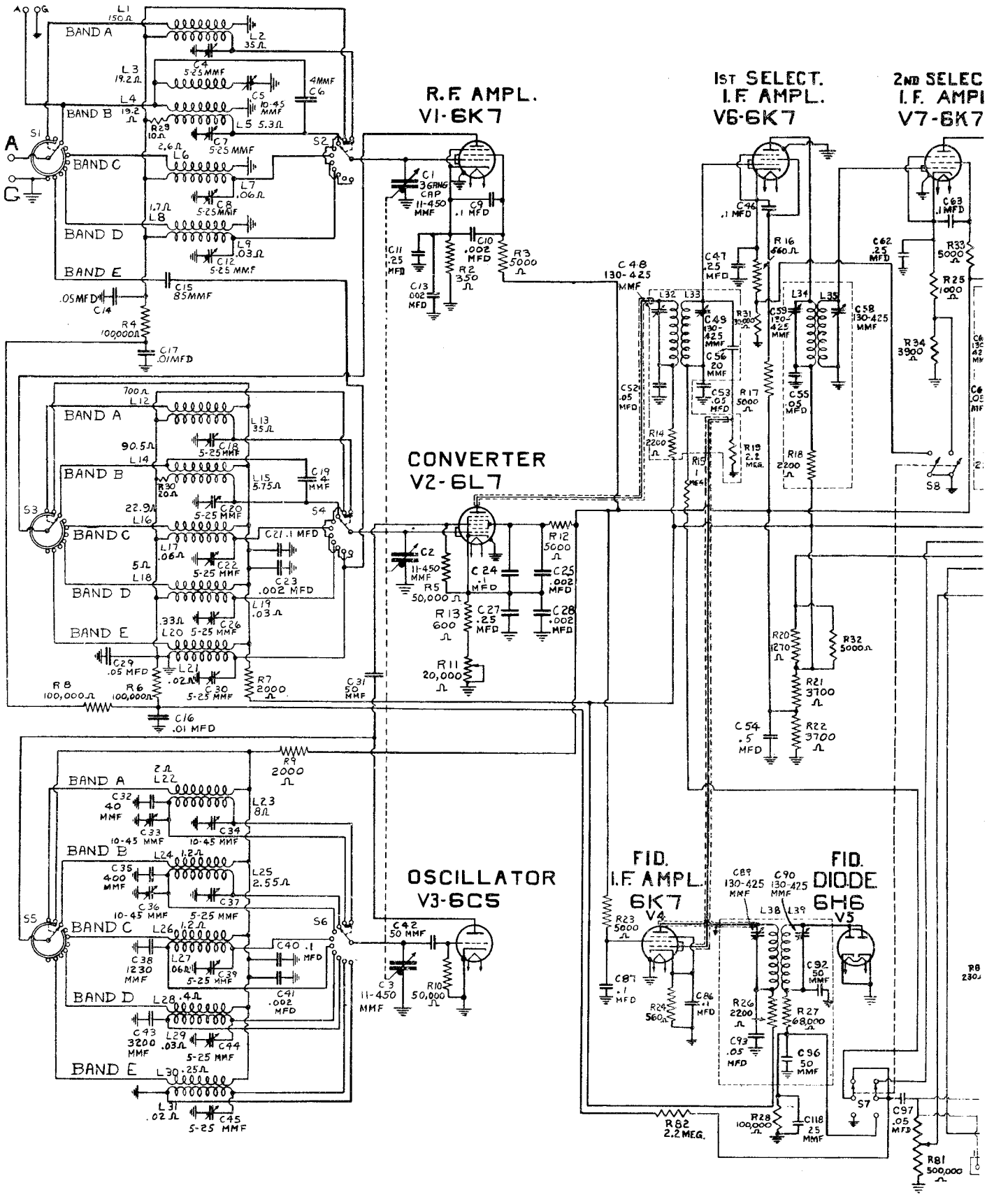

Fig. 3. Schematic C

©John F. Rider, Publisher

LECTRIC CO.

MODELS A-205E, A-208E
Schematic

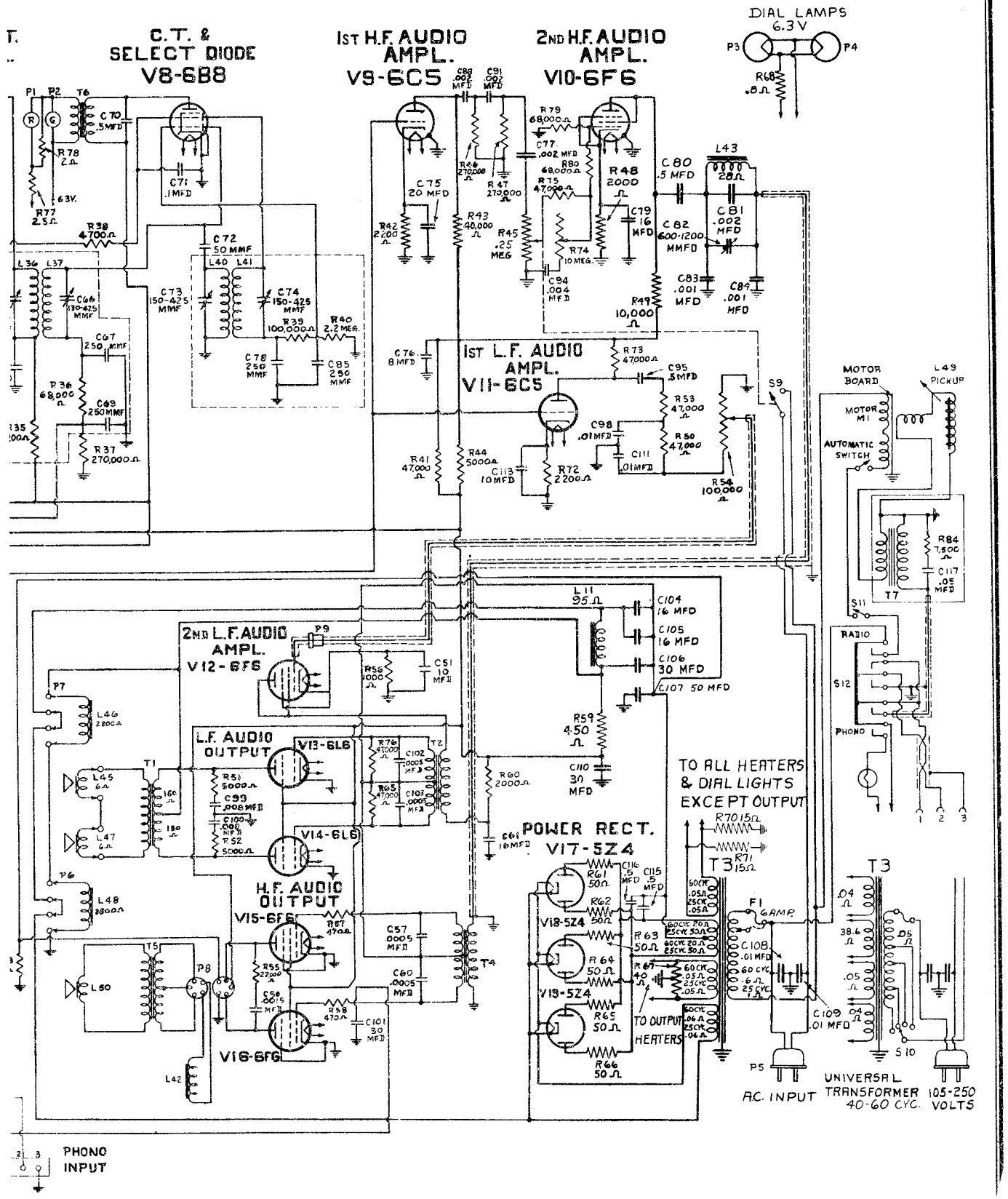

ircuit Diagram

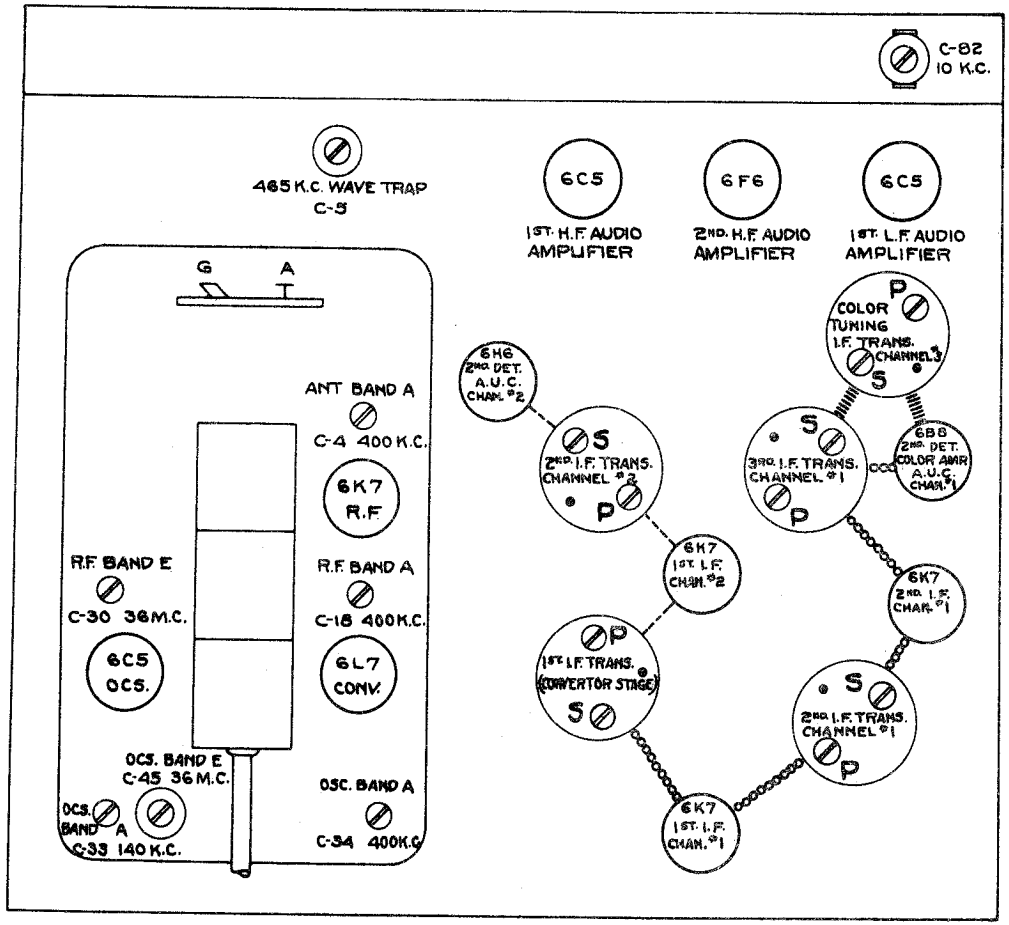

TOP VIEW OF CHASSIS

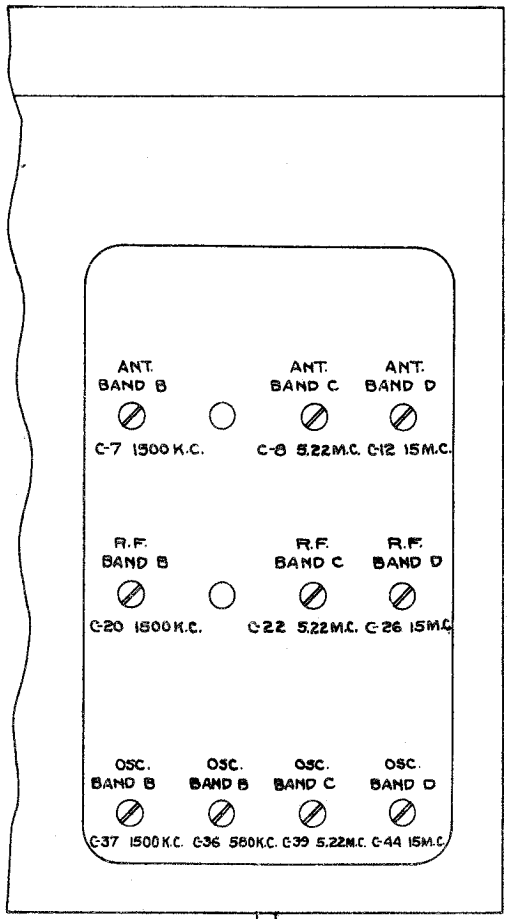

BOTTOM VIEW
OF SENTRY BOX

I.F. CHANNEL #1 "SELECTIVE" oooooooooo
I.F. CHANNEL #2 "BROAD" ----------
I.F. CHANNEL #3 "COLOR TUNING" ||||||||||||

Fig. 4. Trimmer Location

©John F. Rider, Publisher

MODEL A-208E
PHONOGRAPH OPERATION

The volume and tone for phonograph reproduction are regulated by the volume, Bass and Treble controls on the radio panel, while the mechanical operations of the phonograph are regulated by controls located in the phonograph compartment.

For automatic operation, the turntable accommodates a stack of seven or eight records at one loading, the maximum number depending on the thickness and variations in flatness of the records selected. In loading the turntable, all records selected for the stack must be of the same nominal diameter (either 10 or 12 inches). Record changing is accomplished by the Record Ejector, which swings to the left after each selection, carrying the top record from the turntable to the eject pocket at the side of the cabinet. The last or bottom record, however, remains on the turntable and will be repeated until the mechanism is attended.

The following steps are necessary to prepare to play records:

1. Turn the Power Switch "ON" (Fig. 1), making sure the Motor Switch is "OFF" (Fig. 2).
2. Set the Radio-Phono Switch to "Phono" (Fig. 2).
3. With Index Lever at "Manual" (Fig. 2), insert needle in electric pickup and place pickup on rubber rest.
4. Raise Record Ejector Arm to upright position; load records on turntable, then lower Ejector carefully on motor spindle.

Do not attempt to overload the turntable; it is fully loaded when the uppermost record is nearly flush with the top of the spindle, but will not slide off when pushed laterally at the edge. Further, each record must be equipped with an eccentric or spiral "stopping" groove near the center, that groove being depended upon to initiate the automatic mechanism. Use a flat, unwarped record at the bottom of the stack on the turntable. Make sure that the record eject pocket is empty beforeproceeding.

Care also should be observed in the choice of needles that will afford satisfactory reproduction. The orange Chromium needle is recommended for general-purpose use and should play approximately 75 consecutive selections. As alternatives, green Chromium or full-volume Tungstone needles may be used. With care, the former should play approximately 100 and the Tungstone from 100 to 150 selections. Never replace a partially worn Chromium needle (either green or orange) in the pickup, as damage to records would result. Also, do not play transparent-face (illustrated) or Victrolac records with the Tungstone needle.

After the above steps have been carried out, the phonograph is placed in operation as follows:

1. Place electric pickup on smooth outer rim of record; then--for automatic operation only - move the Index Lever to position "10" or "12," corresponding to the diameter of records on the turntable. Do not move the Index Lever from the "Manual" position until the pickup is set on the rim of the record; also be careful not to move the Index Lever beyond the proper hole. For playing records individually, leave the Index Lever at "Manual."
2. Turn the Motor Switch "on" and see that the needle is in the outermost groove of the record.
3. Close the cabinet lid and adjust the Volume Control for the desired volume level. The Volume, Bass and Treble Controls, on the radio panel, control volume and tone both for radio reception and for phonograph reproduction. Set the Tone Controls for full-range reproduction (clockwise); if needle scratch reproduction is considered excessive, decrease treble response slightly.

Note 1. To reject any record being played automatically, lift the electric pickup, move the pickup arm to the extreme left and hold lightly until again moved by the mechanism. The last record on the turntable will be played repeatedly until the motor is stopped.

Note 2. For correct automatic operation, the instrument must be level. After a record has been played and changed, the needle is lowered automatically onto the smooth rim of the next record and is fed by gravity into the starting groove. After leveling with reference to the top of the cabinet, further slight compensation may be necessary, thus: (1) If the needle fails to enter the playing groove, the right-hand side of the instrument must be raised by inserting thin blocks under the cabinet on that side; or (2) if the needle slides over several grooves, thus failing to reproduce the beginning of the selection, the left-hand side of the instrument must be similarly raised.

4. To reload the turntable, turn the Motor Switch "off," move the Index Lever to "Manual" and place pickup on rubber rest. Do not change this order. When through operating, turn the Power Switch "off."

IMPORTANT

1. Never restrain by force the normal motion of any part of the automatic mechanism while it is changing records.
2. Never experiment or tamper with any adjustment device.

With normal use and handling, trouble-free service is to be expected. The automatic phonograph mechanism and associated parts, however, should be kept clean and well lubricated. To insure continued efficient operation, it is recommended that the entire instrument be thoroughly inspected and adjusted by an experienced service man once each year.

INSTALLATION MODEL A-208E

The receiver is shipped with the chassis braced on the inside of the cabinet. In order to put the set into service proceed as follows:

1. Remove the set from its packing case.
2. Lay the set on its back and remove the four lag screws which hold the skid to the bottom of the cabinet. It is necessary that this be done first while other parts of the set are still held in place by packing materials. Care should be taken that the top lids do not swing to the floor while the set is tipped.
3. Right the set and remove the back screen from the cabinet. Take out the three copper plated screws at the corners of the radio chassis. Washers under the brackets through which these screws pass should also be removed.
4. Remove the two copper-plated screws on the under side of the phonograph board. Both the receiver chassis and the phonograph should be floating free on their suspensions.
5. Remove the envelope tacked to the upper chassis mounting board.
6. Thread the antenna and ground leads and the power cord through the hole in the back screen. Connect the antenna and ground leads to the antenna and ground terminal posts.
7. Replace the back screen; additional screws to hold it on will be found in the envelope just mentioned.
8. Remove the packing materials from inside the phonograph compartment.

Operating control knobs, felt washers, used-needle cup, and phonograph needles are shipped in the envelope also. The knobs are easily attached to the control shafts by tightening the knob set screw onto the shaft with a screw driver. The felt washers should be placed between the knobs and the panel so that there will be no possibility of the knobs rubbing on the panel. The phonograph turntable will be found in the package packed with the receiver. To install the turntable, lift the record ejector to its upright position and mount the turntable on the motor spindle. Make certain that the spindle drive key engages the slot in the turntable hub. Record albums will be found packed in the record compartments.

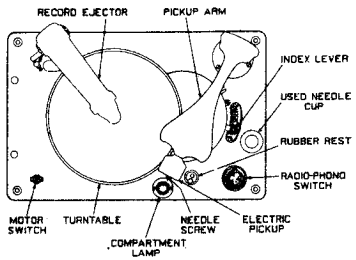

Fig. 2. Phonograph Compartment

INSTALLATION MODEL A-205E

After unpacking the receiver, remove the copper-plated shipping screws from the top of the cabinet shelf so that the chassis floats freely on its rubber mounting feet. It is essential that these shipping screws be removed before the receiver is placed in operation.

To detach the wooden skid which is fastened to the bottom of the cabinet, take off the back of the cabinet and remove the four large black nuts (two at each end of the power unit) which hold the skid bolts. The cabinet may then be lifted off the skid.

Operating control knobs are shipped in an envelope which will be found packed inside the cabinet of the receiver. The knobs are easily attached to the control shafts by tightening the knob set screws onto the shaft with a screwdriver. Sufficient clearance should be left between the knob and the panel so that there will be no danger of the knobs rubbing on the panel.

INSTALLATION - GENERAL

TUBES - Each receiver is equipped and tested at the factory with the tubes that are shipped with the instrument. The location of each tube is shown on the chassis rating label. To install any tube, place the tube directly above the proper socket, pins down, and insert the locating pin in the socket. Keeping the tube at right angles to the chassis deck, rotate the tube in its socket until the locating key slips into the socket groove. Then press the tube into place.

POWER SUPPLY - Before plugging in the power cord make sure that the power supply voltage and frequency available at the outlet agree with the rating label on the receiver chassis. Make sure also that all tubes are in place.

If, when first installed, the receiver fails to operate properly, it is probable that one or more of the tubes may have jarred loose in shipment. Make certain, therefore:

(1) That all tubes are in place in the proper sockets and pressed down firmly. Do not apply power to the receiver unless all tubes are in place.
(2) That the spring connectors of the short flexible (grid) leads shown on the diagram are securely attached to the dome terminals of the proper tubes.

All power must be disconnected from the receiver before changing tubes.

ANTENNA AND GROUND - To obtain the best possible reception from an all-wave receiver, a good antenna system is essential, particularly on short waves. The General Electric "V-Doublet" Antenna System is designed especially for use with all-wave receivers and will give excellent results on both domestic broadcasts and short waves. This system is scientifically correct to insure maximum signal strength and least interference, and is inexpensive, neat in appearance and very easily installed. The General Electric "V-Doublet" Antenna Kit, Stock No. KV-300, is available as an accessory from your General Electric Radio Dealer.

As a less desirable alternative, an antenna of the conventional type 25 to 75 feet long including lead-in and ground connection may be used. The antenna should be well insulated from all objects and run neither close nor parallel to electrical circuits inside or outside the building. Generally an indoor antenna of short or medium length will be found fairly satisfactory for broadcast reception. An outdoor antenna is recommended for localities remote from broadcasting stations and is necessary when the receiver is installed in a building of metallic construction.

A good ground connection is essential for best performance. The ground lead should be as short and direct as possible, and should be connected preferably to a cold water pipe. An approved ground clamp should be used to insure a tight and permanent connection.

Two terminals are provided at the rear of the receiver for antenna and ground connections. These terminals are so spaced as to provide direct connection to the receiver coupling transformer of the "V-Doublet" Antenna Kit.

REPLACEMENT PARTS - MODELS A-205E AND A-208E

(Insist on genuine factory-tested parts which may be purchased from authorized dealers)

RECEIVER CHASSIS ASSEMBLIES

Stock No.	Description	List Price
*RA-402	ARM--Crank arm on changeover shaft for long switching link (pkg.of 2)....	$ .10
*RB-006	BOARD--Terminal board near 10 K.C. filter trimmer condensers	.15
*RB-009	BOARD--Terminal board on same bracket as S-7	.15
*RB-019	BOARD--Three-lug terminal board on rear apron near L-3	.10
*RB-034	BOARD--8-lug terminal board on rear chassis apron	.15
*RB-036	BOARD--Phonograph connector terminal board	.20
*RB-128	BRACKET--Treble control mounting bracket (pkg. of 2)	.10
*RB-129	BRACKET--Supports switch S-8	.10
*RB-130	BRACKET--Bracket supporting switch S-7 and changeover shaft	.10
*RB-131	BRACKET--Volume control mounting bracket (pkg. of 2)	.10
RC-010	CAPACITOR--.002 mfd., 400 V. paper (C-77, C-88, C-91)	.25
*RC-021	CAPACITOR--.004 mfd., 200 V. paper (C-94)	.25
*RC-034	CAPACITOR--.01 mfd., 200 V. paper (C-98, C-111)	.25
*RC-072	CAPACITOR--.05 mfd., 200 V. paper (C-53, C-97)	.25
*RC-091	CAPACITOR--.05 mfd., 400 V. paper (C-52, C-55, C-68, C-93)	.30
*RC-096	CAPACITOR--.1 mfd., 200 V. paper (C-46, C-63, C-86)	.30
*RC-123	CAPACITOR--.1 mfd., 400 V. paper (C-71)	.35
*RC-136	CAPACITOR--.25 mfd., 200 V. paper (C-47, C-62)	.30
*RC-178	CAPACITOR--.5 mfd., 200 V. paper (C-54)	.40
*RC-180	CAPACITOR--.5 mfd., 400 V. paper (C-70, C-80, C-95)	.50
*RC-205	CAPACITOR--20 mmf. mica (C-56)	.35
*RC-211	CAPACITOR--50 mmfd. mica (C-72, C-92, C-96)	.25
*RC-261	CAPACITOR--250 mmfd. mica (C-67, C-69, C-78, C-85)	.25
*RC-333	CAPACITOR--.001 mfd. mica (C-83, C-84)	.30
*RC-350	CAPACITOR--.002 mfd. mica (C-81)	.35
*RC-504	CAPACITOR--10 mfd., 25 V. dry electrolytic (C-115)	.70
*RC-520	CAPACITOR--20 mfd., 25 V; 8 mfd., 450 V; 16 mfd., 50 V. (C-75, C-76, C-79)	2.60
*RC-616	CAPACITOR--600-1200 mmfd. trimmer (C-82)	.65
*RC-810	CABLE--Receiver chassis power cable with plug	2.40
*RC-981	CLAMP--Cable clamp (near S-7) (pkg. of 5)	.10
*RE-008	ESCUTCHEON--Escutcheon for model A-205E	$ 1.10
*RE-009	ESCUTCHEON--Escutcheon front panel and under block for model A-208E	13.15
*RI-003	INSULATOR--Escutcheon shaft insulator - bushing used on A-205E only (pkg.of 10)	.40
RI-006	INDICATOR--"Colorama" tuning indicator	
*RK-002	KNOB--Control knobs (pkg. of 5)	.50
*RL-309	COIL--10 K.C. filter reactor (L-43)	3.95
RL-330	REACTOR--Colorama tuning saturable reactor (T-6)	2.10
*RL-601	COIL--Wave trap coil (L-3)	.80
*RL-907	LINK--Long switching link for S-8	.15
RL-917	LAMP--Colorama tuning red lamp 3.2 volts (P-1) (pkg of 10).....	1.50
RL-918	LAMP--Colorama tuning green lamp 3.2 volts (P-2) (pkg of 10).....	1.50
*RN-001	NUT--Escutcheon mounting nut for A-205E only (pkg of 10)	.45
*RP-014	PLATE--Escutcheon mtg. plate for A-205E only (pkg of 2).....	.25
*RP-034	PLUG--Receiver chassis 8-prong plug	.20
*RP-035	PLATE--Control knob name plate (for A-205E only).....	.35
*RP-036	PIN--Taper pin in front end of changeover shaft (pkg. of 5)	.10
RQ-053	RESISTOR--560 ohm, ½ watt carbon (R-16, R-24) (pkg. of 5)	.60
*RQ-059 (RR-014)	RESISTOR--1000 ohm, ½ watt carbon (R-25) (pkg. of 5)	.70
*RQ-067	RESISTOR--2200 ohm, ½ watt carbon (R-14, R-18, R-26, R-35, *R-42, R-72) (pkg. of 5)	.60
RQ-073	RESISTOR--3900 ohm, ½ watt carbon (R-34) (pkg. of 5)	.60
*RQ-075	RESISTOR--4700 ohm, ½ watt carbon (R-38) (pkg. of 5)	.60
*RQ-097	RESISTOR--39,000 ohm, ½ watt carbon (R-31) (pkg. of 5)	.60
*RQ-099	RESISTOR--47,000 ohm, ½ watt carbon (R-50, R-53, R-73, R-75)(pkg. of 5)..	.60
*RQ-103	RESISTOR--68,000 ohm, ½ watt carbon (R-27, R-36, R-79, R-80)(pkg. of 5)..	.60
*RQ-107 (RR-050)	RESISTOR--100,000 ohm, ½ watt carbon (R-28, R-39) (pkg. of 5)	.70
*RQ-117	RESISTOR--270,000 ohm, ½ watt carbon (R-37, R-46, R-47) (pkg. of 5)	.70
*RQ-131 (RR-067)	RESISTOR--1 meg. ½ watt carbon (R-15) (pkg. of 5)	.70
*RQ-139	RESISTOR--2.2 meg. ½ watt carbon (R-19, R-40, R-82) (pkg. of 5)	.70
RQ-499	RESISTOR--47,000 ohm, 1 watt carbon (R-41) (pkg. of 5)	.75
*RR-016	RESISTOR--5000 ohm, ½ watt carbon (R-17, R-23, R-33) (pkg. of 5)	.70
*RR-163	RESISTOR--2000 ohm, ½ watt carbon (R-48) (pkg. of 5)	.70
*RR-281	RESISTOR--40,000 ohm, 2 watt carbon (R-43)	.30
RR-304	RESISTOR--.8 ohm, ½ watt flexible (R-68) (pkg. of 5)	.70
RR-601	RESISTOR--2.5 ohm, 5 watt vitreous (R-77)	.30
RR-602	RESISTOR--2.0 ohm, 5 watt vitreous (R-78)	.30
*RR-627	RESISTOR--3700 ohm, 10 watt vitreous (R-21, R-22)	.45
*RR-628	RESISTOR--5000 ohm, 10 watt vitreous (R-32, R-44)	.45
*RR-631	RESISTOR--10,000 ohm, 10 watt vitreous (R-49)	.45
*RR-712	RESISTOR--1270 ohm, 20 watt vitreous (R-20)	.45
*RR-900	REFLECTOR--Dial light reflector	.15
*RS-126	SHIELD--Fidelity diode socket shield can	.15
*RS-127	SHIELD--Selectivity diode socket shield can	.15
*RS-128	SHIELD--1st I.F. 6K7 tube socket shield can	.30
*RS-129	SHIELD--2nd I.F. 6K7 tube socket shield can	.30
*RS-130	SHIELD--Fidelity 6K7 tube socket shield can	.30
*RS-134	SHIELD--Base shield with mounting feet (for A-205E only).....	2.75
*RS-135	SHIELD--Base shield with mounting feet (for A-208E only).....	2.80
*RS-200	SOCKET--Eight-pin tube socket (pkg. of 5)	.75
*RS-319	SWITCH--Toggle switch next to fidelity 6K7 socket shield (S-8)	1.90
*RS-320	SWITCH--Double pole-double throw switch (S-7)	2.45
*RS-413	SPRING--Spring on back end of changeover shaft (pkg. of 4)	.10
*RS-414	SPRING--Spring on switching link (pkg. of 4)	.10
*RS-903	SHAFT--Fidelity switch shaft assembly (used on A-205E only).....	4.75
*RS-904	SHAFT--Fidelity switch shaft assembly (used on A-208E only).....	4.75
*RT-709	VOLUME CONTROL--Bass volume control, 100,000 ohms - (R-54)	1.20
RV-024	VOLUME CONTROL--500,000 ohm volume control (for A-205E only)(R-81)	
RV-025	VOLUME CONTROL--500,000 ohm volume control (for A-208E only)(R-81)	
RV-026	VOLUME AND TONE CONTROL--High frequency audio channel volume control (for A-205E only) (R-45, R-74, S-9)	
RV-027	VOLUME AND TONE CONTROL--High frequency audio channel volume control (for A-208E only)(R-45, R-74, S-9)	
*RW-002	WINDOW--Dial window (used on A-205E).....	.15
*RW-003	WINDOW--Dial window (used on A-208E).....	.35
*RW-101	WASHER--Felt washer for control shafts (pkg. of 10)	.45
*RX-004	SCREW ASSEMBLY--Chassis mounting screw assembly	.10

"SENTRY BOX" ASSEMBLIES

*RB-010	BOARD--Connection terminal board on top side of sentry box.....	.10
*RB-012	BOARD--Antenna and ground terminal board	.15
*RC-034	CAPACITOR--.01 mfd., 200 V. paper (C-16, C-17)	$ .25
*RC-072	CAPACITOR--.05 mfd., 200 V. paper (C-14, C-29)	.25
*RC-096	CAPACITOR--.1 mfd., 200 V. paper (C-9, C-24)	.30
*RC-123	CAPACITOR--.1 mfd., 400 V. paper (C-21, C-40)	.35
*RC-136	CAPACITOR--.25 mfd., 200 V. paper (C-11, C-27)	.30
*RC-202	CAPACITOR--4 mmf. mica (C-6, C-19)	.25
*RC-211	CAPACITOR--50 mmf. mica (C-31, C-42)	.25
*RC-212	CAPACITOR--40 mmf. mica (C-32)	.25
*RC-228	CAPACITOR--85 mmf. mica (C-15)	.25
*RC-289	CAPACITOR--400 mmf. mica (C-35)	.25
*RC-340	CAPACITOR--1230 mmfd. mica (C-38)	.50
*RC-349	CAPACITOR--.002 mfd. mica (C-10, C-13, C-23, C-25, C-28, C-41)	.30
*RC-353	CAPACITOR--3200 mmfd. mica (C-43)	.70
*RC-602	CAPACITOR--10-45 mmfd. permaliner trimmer (C-5, C-33, C-34, C-36)	.50
*RC-603	CAPACITOR--5-25 mmf. permaliner trimmers (C-4, C-7, C-8, C-12, C-18, C-20, C-22, C-26, C-30, C-37, C-39, C-44, C-45)	.55
*RC-702	CONDENSER--3 gang tuning condenser	4.25
*RG-001	GRID CAP--Control grid cap.(pkg. of 5)	.10
*RG-100	GUARD--Terminal strip guard	.15
*RL-003	COIL--Antenna coil band "A" (L-1 and L-2)	1.00
*RL-014	COIL--Antenna coil band "B" (L-4 and L-5)	.75
*RL-015	COIL--Antenna coil band "C" (L-6 and L-7)	.65
*RL-016	COIL--Antenna coil band "D" (L-8, L-9)	.60
*RL-103	COIL--R.F. coil band "A" (L-12, L-13)	1.60
*RL-116	COIL--R.F. coil band "B" (L-14, L-15)	1.05
*RL-117	COIL--R.F. coil band "C" (L-16, L-17)	.65
*RL-118	COIL--R.F. coil band "D" (L-18, L-19)	.60
*RL-119	COIL--R.F. coil band "E" (L-20, L-21)	.60
*RL-207	COIL--Osc. coil band "A" (L-22, L-23)	.70
*RL-217	COIL--Osc. coil band "B" (L-24, L-25)	.85
*RL-218	COIL--Osc. coil band "C" (L-26, L-27)	.60
*RL-219	COIL--Osc. coil band "D" (L-28, L-29)	.60
*RL-220	COIL--Osc. coil band "E" (L-30, L-31)	.85
RQ-011	RESISTOR--10 ohm, ½ watt carbon (R-29) (pkg. of 5)	.60
RQ-018	RESISTOR--20 ohm, ½ watt carbon (R-30) (pkg. of 5)	.60
*RR-001	RESISTOR--350 ohm, ½ watt carbon (R-2) (pkg. of 5)	.70
*RR-015	RESISTOR--5000 ohm, ½ watt carbon (R-3, R-12) (pkg. of 5)	.70
*RR-022	RESISTOR--600 ohm, ½ watt carbon (R-13) (pkg. of 5)	.70
*RR-036	RESISTOR--50,000 ohm, ½ watt carbon (R-5, R-10) (pkg. of 5)	.70
*RR-049	RESISTOR--100,000 ohm, ½ watt carbon (R-4, R-6, R-8) (pkg. of 5)	.70
*RR-163	RESISTOR--2000 ohm, ½ watt carbon (R-7, R-9) (pkg. of 5)	.70
*RR-192	SENSITIVITY CONTROL--20,000 ohm potentiometer (R-11)	.95
*RS-111	SHIELD--Osc. compartment shield can	1.20
*RS-112	SHIELD--R.F. compartment shield can	1.25
*RS-125	SHIELD--Antenna compartment shield can	1.25
*RS-303	SWITCH--Osc. R.F. pr antenna band change switch (S-1, S-2, S-3, S-4, S-5 S-6)	1.20
*RX-002	CUSHION ASSEMBLY--Tuning condenser mounting cushions, nut and washers ...	.10

©John F. Rider, Publisher

MODELS A-205E, A-208E
Parts concluded

GENERAL ELECTRIC CO.

MISCELLANEOUS ASSEMBLIES

*RB-020	BOARD--Terminal board for pickup leads	.15
*RB-510	BOX--Used neelde box	.40
*RB-601	BASE--Phonograph compartment lamp base	.55
*RC-807	CABLE--Motor connection cable	.50
*RC-812	CABLE--Phonograph input transformer cable	.45
*RK-003	KNOB--Radio Phono switch knob	.25
*RP-017	PLATE--Radio phono name plate	.25
*RP-024	PLUG--Two contact round female plug	.60
*RP-025	PLUG--Two contact male connector plug - round	.20
*RP-026	PLUG--Two contact female connector plug - flat	.45
*RP-027	PLUG--Two contact male connector plug - flat	.45
*RR-850	RECEPTACLE--Needle card holder	.38
*RS-310	SWITCH--Radio phono switch	1.65
*RS-502	SHADE--Phonograph compartment lamp shade	.16
*RT-601	TRANSFORMER--Phonograph input transformer includes C-117 and R-84	5.42

MOTOR ASSEMBLIES

*RM-102	MOTOR--105-130 V., 50 cycles	25.88
*RM-103	MOTOR--105-130 V., 60 cycles	25.88
*RX-006	SPRING ASSEMBLY--Motor mounting spring, washer, and stud assembly. Six springs, six cup washers, three spring washers and three studs	.58

(Prices subject to change without notice)

*Used on previous "A" and "E" line receivers.

POWER UNIT CHASSIS ASSEMBLIES

*RB-008	BOARD--Two-lug terminal board	.10
*RB-032	BOARD--7-lug terminal board	.15
*RC-031	CAPACITOR--.008 mfd., 1500 V. paper (C-99, C-100)	.25
RC-195	CAPACITOR--.0015 mfd., 1000 V. paper (C-50)	.25
*RC-196	CAPACITOR--.5 mfd., 500 V. paper (C-115, C-116)	.75
*RC-296	CAPACITOR--.0005 mfd., 500 V. mica (C-57, C-60, C-102, C-103)	.25
*RC-406	CAPACITOR--16 mfd., 400 V. wet electrolytic (C-61)	1.25
*RC-411	CAPACITOR--30 mfd., 400 V. wet electrolytic (C-101, C-106, C-110)	1.55
*RC-504	CAPACITOR--10 mfd., 25 V. dry electrolytic (C-51)	.70
*RC-512	CAPACITOR--50 mfd., 50 V. dry electrolytic (C-107)	1.75
*RC-515	CAPACITOR--16 mfd., 500 V. dry electrolytic (C-104, C-105)	2.70
*RC-751	CAPACITOR--.01 mfd., 250 V. A-C twin line capacitors (C-108, C-109)	.45
*RC-813	CABLE--Cable and female plug for connection to phono lamp cable (for A-208E only)	.90
*RC-814	CABLE--Cable and female plug for connection to phonograph motor	.90
*RC-859	CORD--Power cord	.60
*RC-978	COVER--Fuse cover	.10
*RF-009	FOOT--SPU chassis mounting foot assembly	.25
RF-305	FUSE--Plug type 6 amp fuse (F-1)	.20
*RL-304	CHOKE--Filter reactor (L-11)	7.45
*RQ-051	RESISTOR--470 ohm, ¼ watt carbon (R-57, R-58) (pkg. of 5)	.60
*RQ-099	RESISTOR--47,000 ohm, ¼ watt carbon (R-69, R-76) (pkg. of 5)	.60
*RQ-459	RESISTOR--1000 ohm, 1 watt carbon (R-56)	.15
RQ-666	RESISTOR--2000 ohm, 2 watt carbon (R-60)	$ .30
RQ-691	RESISTOR--22,000 ohm, 2 watt carbon (R-55)	.35
*RR-309	RESISTOR--15 ohm, 1 watt flexible (R-70, R-71) (pkg. of 5)	.90
*RR-606	RESISTOR--210 ohm, 5 watt vitreous (R-83)	.30
*RR-628	RESISTOR--5,000 ohm, 10 watt vitreous (R-51, R-52)	.45
*RR-705	RESISTOR--50 ohm vitreous enameled (R-61, R-62, R-63, R-64, R-65, R-66)	.40
*RR-709	RESISTOR--450 ohm vitreous enameled (R-59)	.40
*RR-710	RESISTOR--40 ohm center tapped candohm (R-67)	.35
*RR-851	RECEPTACLE--Fuse receptacle	.45
*RS-207	SOCKET--6-prong socket for speaker plugs	.35
*RS-208	SOCKET--8-prong socket receiver chassis plug	.25
*RT-191	TRANSFORMER--Power transformer 105-130 volt, 60 cycle (T-3)	25.90
*RT-406	TRANSFORMER--High frequency channel output transformer (T-5)	1.90
*RT-410	TRANSFORMER--Low frequency channel output transformer (T-1)	10.25
*RT-503	TRANSFORMER--High frequency channel interstage transformer (T-4)	10.30
*RT-505	TRANSFORMER--Low frequency channel interstage transformer (T-2)	5.60
*RW-103	WASHER--Insulating washer for mounting capacitor (C-106) (pkg. of 10)	.20
*RW-104	WASHER--Insulating washer for mounting (C-105 and C-104) (pkg. of 4)	.15

DIAL MECHANISM ASSEMBLY

*RB-114	BRACKET--Precision tuning indicator bracket (14)	.15
*RB-120	BRACKET--Dial mechanism supporting post	.15
*RB-125	BRACKET--Mounting bracket assembly	.90
*RB-126	BRACKET--Dual lamp bracket	.25
*RC-802	CABLE--Metal braid dial cable (12) (pkg. of 5)	.55
*RC-856	CORD--Dial cord (11) (pkg. of 5)	.65
*RC-954	CAP--Scale cap assembly gear end (29)	.10
*RC-955	CAP--Scale cap free end (30)	.10
*RC-957	COLLAR--Microlog retaining split collar (pkg. of 5)	.10
*RC-962	COLLAR--Precision drive gear shaft collar external (44)	.15
*RC-963	COLLAR--Precision drive gear shaft collar internal (45)	.15
*RD-009	DRUM--Tuning condenser drive drum and gear teeth	.45
*RD-010	DIAL--Precision dial and pinion gear (20)	.60
*RD-022	DRIVE--Differential reduction drive (for A-205E only)	1.00
*RD-023	DIAL--Cylindrical dial scale	.65
*RD-026	DRIVE--Differential drive (for A-208E only)	1.00
*RF-200	FASTENER--Dial fastener (40) (pkg. of 10)	.10
*RG-002	GEAR--Dial gear assembly and set screws (8 and 9) 2 screws fil. hd. 4-40 x 5/32 cup pt.	.15
*RG-003	GEAR--Precision dial drive gear (17)	.15
*RG-004	GEAR--Precision dial backlash gear (36)	.15
*RG-200	GUIDE--Dial pointer guide (50) (pkg. of 5)	.15
*RI-004	INDEXING PLATE--Front plate and set screw for band switch shaft	.50
*RP-033	POINTER--Dial pointer (for A-205E only) (pkg. of 2)	.20
*RP-038	POINTER--Dial pointer (for A-208E only)	.15
*RS-401	SPRING--Drum spring (13) (pkg. of 2)	.10
*RS-402	SPRING--Precision dial backlash spring (16)	.15
*RS-403	SPRING--Dial scale spring (7) (pkg. of 2)	.10
*RS-500	STUD--Precision dial gear stud	.20
*RS-905	SHAFT--Round and flat shafts and gear for band change switch (6) (for A-208E only)	.45
*RS-906	SHAFT--Round and flat shafts and gear for band change switch (6)	.40

SPEAKER ASSEMBLIES
(11-Inch Speaker Assembly)

*RB-035	BOARD--Speaker terminal board assembly	.10
*RC-811	CABLE--Speaker cable	.40
*RC-903	CONE--11-inch type cone, voice coil and gasket	1.50
*RC-960	CLAMP--Speaker cable clamp	.10
*RC-984	CUSHION--Rubber speaker mounting cushion (pkg. of 8)	.30
*RP-037	PLUG--6-pin speaker plug	.25
*RR-801	RING--Cone clamping ring (pkg. of 4)	.40
*RS-021	SPEAKER--Single 11-inch type speaker (complete)	17.50
*RX-014	SCREW ASSEMBLY--Nuts, bushings, and washers for mounting one speaker	.50

(8-Inch Speaker Assembly)

RC-921	CONE--8-inch type cone and voice coil	1.20
*RC-990	CLAMP--8-inch cone spider clamp	.05
*RP-012	PLUG--Female speaker plug	.20

*RP-015	PLUG--Male speaker plug	.20
RS-052	SPEAKER--8-in.type high-frequency channel speaker (with output transformer)	8.00
*RT-406	TRANSFORMER--Output transformer (T-5)	1.90

RECORD CHANGING MECHANISM MODEL A-208E

*RC-965	CAM--Cam and gear assembly	$1.18
*RC-966	CLUTCH--Trip lever frictional clutch	.30
*RC-967	COVER--Metal cover for trip lever and friction finger assembly	.36
*RF-400	FINGER--Manual index lever finger assembly	.25
*RF-401	FINGER--Friction finger assembly	.32
*RL-901	LEVER--Manual index lever less pin	.62
*RL-902	LEVER--Main lever and link assembly	2.10
*RL-903	LEVER--Main spring lever	.42
*RL-904	LEVER--Pickup arm cable lever assembly	.40
*RL-905	LEVER--Trip lever and friction clutch assembly	.94
*RP-018	PAWL--Trip pawl assembly	.40
*RP-019	PLATE--Eject arm actuating plate assembly	.50
*RS-405	SPRING--Actuating spring (pkg. of 10)	.24
*RS-406	SPRING--Cable lever tension spring (pkg. of 10)	.44
*RS-407	SPRING--Manual index lever finger tension spring (pkg. of 10)	.30
*RS-408	SPRING--Main spring lever tension spring (pkg. of 10)	.38
*RS-409	SPRING--Trip lever latch plate tension spring (pkg. of 10)	.30
*RS-850	SCREW--Cable lever screw and nut (pkg. of 10)	.60
*RS-851	SCREW--Manual index lever set screw (pkg. of 10)	.20
*RS-852	SCREW--Trip lever clutch tension adjustment screw (pkg. of 10)	.22
*RS-853	SCREW--Special screw fastening main lever and link assembly bushing (pkg. of 10)	.30
*RS-950	SPACER--Pickup arm mounting spacer	.28
*RW-100	WASHER--Spring washer "U" type (pkg. of 10)	.25

EJECT ARM ASSEMBLIES

*RA-400	ARM--Eject arm complete	.82
*RB-121	BRACKET--Eject arm bracket	1.72
*RB-300	BALL--1/16-in. diameter steel ball (pkg. of 10)	.20
*RB-301	BALL--3/16-in. diameter steel ball (pkg. of 20)	.25
*RB-400	BEARING--Ejector tip bearing and nut	.32
*RC-968	COLLAR--Eject arm shaft collar and set screw	.24
*RC-969	COVER--Eject arm cover	1.52
*RC-970	CUSHION--Counterbalance roller cushion located inside of eject arm	.14
*RP-020	POST--Vertical adjustment post located on eject arm bracket	.30
*RR-901	ROLLER--Eject arm counter balance roller	.45
*RS-410	SPRING--Eject arm bracket spring (pkg. of 10)	.30
*RS-411	SPRING--Ejector tip spring (pkg. of 10)	.42
*RS-501	SILENCER--Ejector tip silencer	.14
*RS-854	SCREW--6-32 x 3/16" square head set screw for eject arm collar (pkg. of 10)	.25
*RS-855	SCREW--8-36 x 7/32" special for eject arm tip center adjustment (pkg. of 10)	.14
*RS-902	SHAFT--Eject arm vertical action shaft and collar assembly	.15
*RT-900	TIP--Ejector tip with tip center adjusting screw and cap	.32
*RY-001	YOKE--Eject arm yoke assembly	.94

PICKUP AND ARM ASSEMBLIES

*RA-401	ARM--Pickup arm complete less pickup mounting screw escutcheon and pickup unit	4.80
*RA-500	ARMATURE--Pickup armature	.72
*RB-500	BACK--Pickup back	.52
*RC-806	CABLE--Pickup arm operating cable (Pkg. of 5)	1.00
*RC-971	COVER--Pickup front cover	.22
*RC-972	COVER--Pickup back cover with mounting screw	.14
*RD-100	DAMPER--Pickup damper (Pkg. of 5)	.65
*RL-800	COIL--Pickup coil	.80
*RL-801	COIL--Pickup hum bucking coil	.60
*RP-021	PICKUP--Pickup unit complete	4.80
*RS-856	SCREW--Pickup cover screw (Pkg. of 10)	.42
*RS-857	SCREW--Pickup needle screw (Pkg. of 10)	.42
*RX-007	SCREW ASSEMBLY--Screw, nut and washer for mounting pickup to arm (Pkg. of 10)	.40

MOTOR BOARD ASSEMBLIES

*RC-973	COVER--Turntable cover	$.88
*RE-006	ESCUTCHEON--Index escutcheon manual 12-10	.44
*RN-002	NUT--Cap nut for motor board suspension assembly (Pkg. of 4)	.40
*RP-022	PIN--Manual index pin	.42
*RR-902	ROLLER--Pickup arm cable guide roller, bracket roller and pin	.34
*RR-903	REST--Pickup rest	.14
*RS-307	SWITCH--Motor toggle switch	.72
*RT-901	TURNTABLE--Turntable complete	2.90
*RX-003	SPRING ASSEMBLY--Suspension spring, washer and bolt assembly for motor board - comprising one bolt, two cup washers, two springs, two "C" washers and one cap nut	.42

AUTOMATIC SWITCH ASSEMBLIES

*RC-974	COVER--Motor switch cover	.26
*RP-023	PLATE--Automatic brake latch plate (Pkg. of 5)	.40
*RS-308	SWITCH--Automatic switch complete	1.90
*RS-309	SWITCH--Motor switch	.75
*RS-412	SPRINGS--Automatic brake springs (Pkg. of 2)	.50

©John F. Rider, Publisher

GENERAL HOUSEHOLD UTILITIES CO.

MODELS 576,578
Chassis 5T
Schematic, Parts

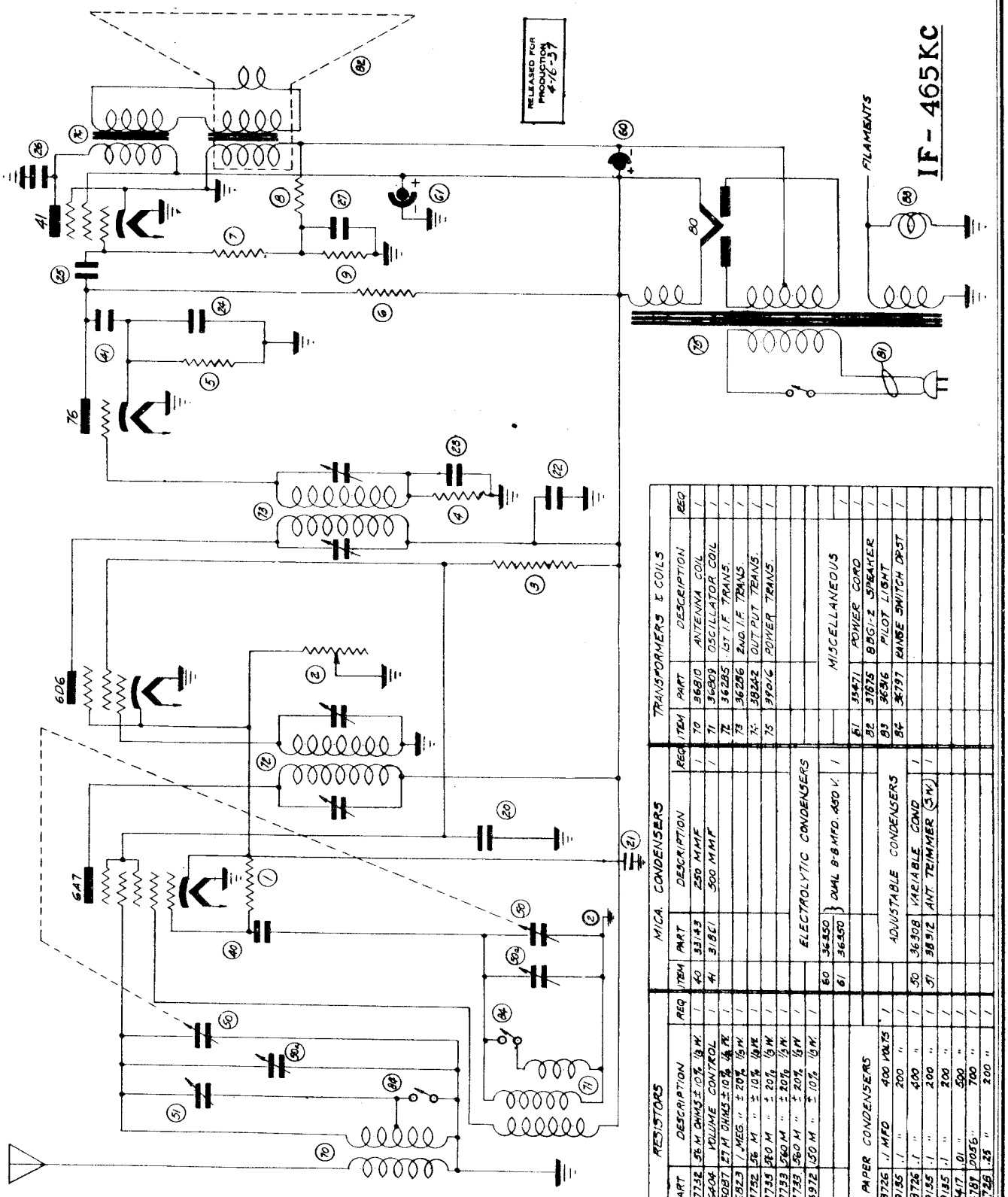

ITEM	PART	DESCRIPTION	REQ
		RESISTORS	
1	37732	36 M. OHMS ± 10% ½ W.	1
2	36404	VOLUME CONTROL	1
3	35087	27 M OHMS ± 10% ½ W.	1
4	36823	1 MEG " ± 20% ½ W	1
5	37732	36 M " ± 10% ½ W	1
6	37735	360 M " ± 20% ½ W.	1
7	37733	360 M " ± 20% ½ W.	1
8	37733	360 M " ± 20% ½ W	1
9	36972	30 M " ± 10% ½ W.	1
		PAPER CONDENSERS	
20	28726	.1 MFD 400 VOLTS	1
21	29135	.1 " 200 "	1
22	28726	.1 " 400 "	1
23	29135	.1 " 200 "	1
24	29135	.1 " 200 "	1
25	28417	.01 " 500 "	1
26	34781	.0056 " 700 "	1
27	28726	.25 " 200 "	1

ITEM	PART	DESCRIPTION	REQ
		MICA CONDENSERS	
40	33143	250 MMF	1
41	31801	500 MMF	1
		ELECTROLYTIC CONDENSERS	
60	36450	DUAL 8-8 MFD. 450 V.	1
61	36450		
		ADJUSTABLE CONDENSERS	
50	36308	VARIABLE COND	1
51	38912	ANT TRIMMER (3 W.)	1

ITEM	PART	DESCRIPTION	REQ
		TRANSFORMERS & COILS	
70	36810	ANTENNA COIL	1
71	36809	OSCILLATOR COIL	1
72	36285	1ST I.F. TRANS.	1
73	36286	2ND I.F. TRANS.	1
74	38242	OUT PUT TRANS.	1
75	39016	POWER TRANS.	1
		MISCELLANEOUS	
81	35471	POWER CORD	1
82	37635	8 OHM 2 SPEAKER	1
83	36536	PILOT LIGHT	1
84	36797	BAND SWITCH ASSY	1

©John F. Rider, Publisher

MODELS 583,585,586
588 Chassis 5W
Schematic,Parts

GENERAL HOUSEHOLD UTILITIES CO.

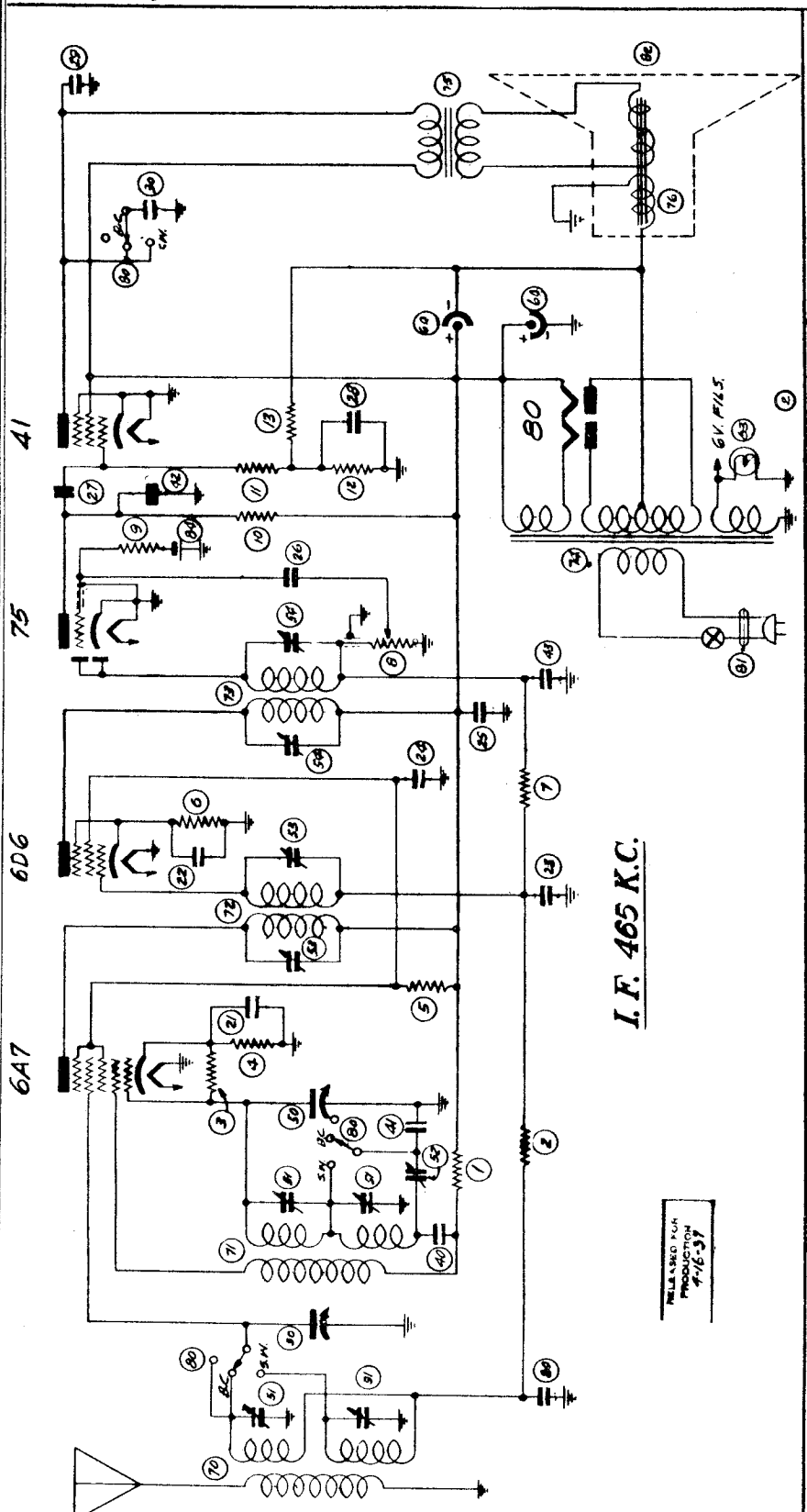

RESISTORS

ITEM	PART	DESCRIPTION	DWG
1	37575	20 M OHMS ± 10% ½ WATT	1
2	36626	1000 M OHMS ½ WATT	1
3	37732	5.6 M OHMS ± 10% ½ WATT	1
4	36967	3.90 OHMS ± 10% ½ WATT	1
5	36705	33 M OHMS 1 WATT	1
6	36567	390 OHMS ± 10% ½ WATT	1
7	36633	1 MEGOHM ½ WATT	1
8	36968	VOLUME CONTROL ASSEMBLY	1
9	36833	1 MEGOHM ½ WATT	1
10	36933	220 M OHMS ± 10% ½ WATT	1
11	37733	560 M OHMS ½ WATT	1
12	36706	150 M OHMS ± 10% ½ WATT	1
13	36707	1.5 M OHMS ± 10% ½ WATT	1
14			

PAPER CONDENSERS

ITEM	PART	DESCRIPTION	DWG
20	30153	.05 MFD 200 VOLT	1
21	29435	.1 MFD 200 VOLT	1
22	29365	.1 MFD 200 VOLT	1
23	30143	.05 MFD 200 VOLT	1
24	28726	.1 MFD 400 VOLT	1
25	28726	.1 MFD 400 VOLT	1
26	37467	.01 MFD 500 VOLT	1
27	37467	.01 MFD 500 VOLT	1
28	28728	.25 MFD 200 VOLT	1
29	36787	.0058 MFD 700 VOLT	1
30	34483	.02 MFD 500 VOLT	1
		MICA CONDENSERS	1
40	33/45	1000 M.M.F. ± 5%	1
41	27520	230 M.M.F. ± 5%	1
42	33/42	1000 M.M.F. ± 10%	1
43	3486	500 M.M.F. ± 20%	1

ADJUSTABLE CONDENSERS

ITEM	PART	DESCRIPTION	DWG
50	38919	VARIABLE CONDENSER	1
51	36550	75 MMFD CONDENSER	1
52	36558	BRONZE CAST PADDER	1
53	35341	.1 MFD TRIMMER	1
54	31141	210 MFD TRIMMER	1

TRANSFORMERS & COILS

ITEM	PART	DESCRIPTION	DWG
70	34427	ANTENNA COIL	1
71	37476	OSCILLATOR COIL	1
72	36736	I.F.	1
73	31220	2.5 H.F.	1
74	37016	POWER TRANSFORMER	1
75	34042	OUTPUT TRANSFORMER	1
76	3844	FIELD COIL	1

MISCELLANEOUS

ITEM	PART	DESCRIPTION	DWG
80	34605	RANGE SWITCH	1
81	33471	LINE CORD	1
82	38607	SPEAKER 6B5/-S	1
83	38616	SPEAKER BAFFLE (6B5/S)	1
84	38613	SPEAKER BAFFLE (6B7/S)	1
85	40643	PILOT LIGHT	1
86	43883	GLASS CELL	1

ELECTROLYTIC CONDENSERS

ITEM	PART	DESCRIPTION	DWG
60	36350	DUAL 8 MFD 450 V.	1

©John F. Rider, Publisher

GENERAL HOUSEHOLD UTILITIES CO.

MODELS 587,589,599
Chassis 5U,5P
Schematic,Parts

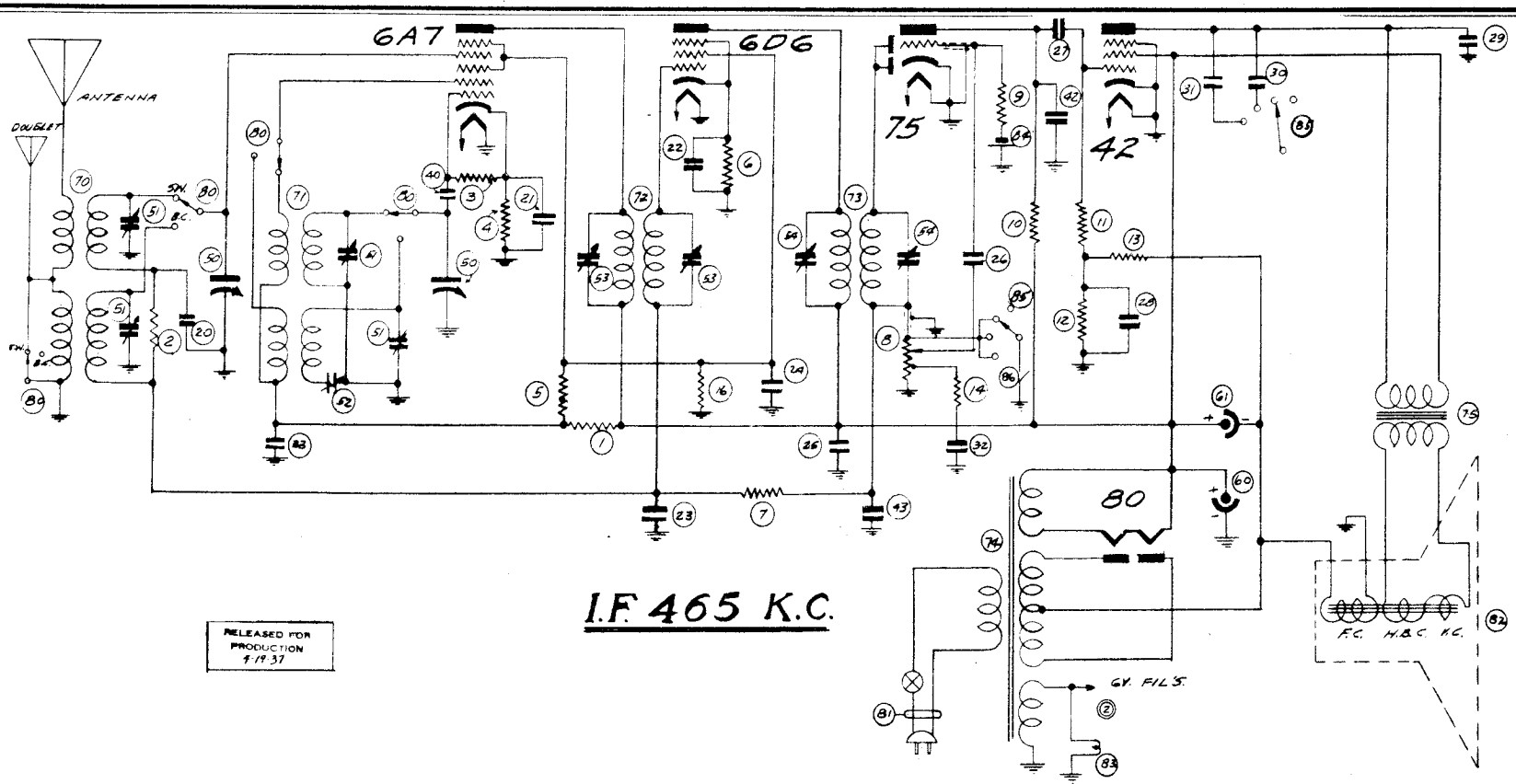

RESISTORS			
ITEM	PART	DESCRIPTION	REQ.
1	38797	6M. OHMS ±10% 1W.	1
2	36826	100M. " 1/3 W.	1
3	37732	56M. " 1/3 W.	1
4	36967	390 " 1/3 W.	1
5	38926	27M. " 1W.	1
6	38798	470 " 1/3 W.	1
7	36823	1MEG. " 1/3 W.	1
8	37576	VOL. CONT. 250M. Ω	1
8	38614	(LATE) VOLUME CONTROL	1
9	36823	1MEG OHM 1/3 W	1
10	36833	220M. OHMS 1/3 W.	1
11	37733	560M. " 1/2 W.	1
12	35106	150M. " ±10% 1/2 W.	1
13	35107	560M. " ±10% 1/2 W.	1
14	36973	33M. " ±20% 1/3 W.	1
15			
16	36829	47M. ± 10% 1/3 W.	1

PAPER CONDENSERS			
ITEM	PART	DESCRIPTION	REQ.
20	33760	.006 M.F.D. 700 VOLTS	1
21	29135	.1 " 200 "	1
22	29135	.1 " " "	1
23	30143	.05 " " "	1
24	29135	.1 " " "	1
25	28726	.1 " 400 "	1
26	34417	.01 " 500 "	1
27	34417	.01 " " "	1
28	36563	.20 " 200 "	1
29	28717	.002 " 700 "	1
30	29813	.004 " 700 "	1
31	34417	.01 " 500 "	1
32	33665	.03 " 200 "	1
33	28723	.05 " 400 "	1
MICA CONDENSERS			
40	31358	50 M.M.F.	1
41			
42	33142	1000 M.M.F.	1
43	31861	500 M.M.F.	1

ADJUSTABLE CONDENSERS			
ITEM	PART	DESCRIPTION	REQ.
50	38662	VARIABLE COND.	1
51	38522	TRIMMER COND.	1
52	38551	BROADCAST PADDER	1
53	35341	1ST I.F. TRIMMER	2
54	35342	2ND I.F. TRIMMER	2
ELECTROLYTIC CONDENSERS			
60	33469	18 M.F.D. 300V. REG.	1
61	33369	12 M.F.D. 450V.	1

TRANSFORMERS & COILS			
ITEM	PART	DESCRIPTION	REQ.
70	38796	ANTENNA COIL	1
71	38795	OSCILLATOR COIL	1
72	35276	1ST I.F.	1
73	35292	2ND I.F.	1
74	37718	POWER TRANSF.	1
75	37859	SPKR. OUTPUT TRANSF. MOD. 587 & 589	1
75	37869	OUTPUT TRANSF. MOD. 599	1

MISCELLANEOUS			
ITEM	PART	DESCRIPTION	REQ.
80	38541	RANGE SWITCH	1
81	33471	LINE CORD	1
82	38962	8BG2-6 SPEAKER (MOD. 589 & 587)	1
82	38842	12G3-3 " (MOD. 599)	1
83	38647	PILOT LIGHT	1
84	33883	BIAS CELL	1
85	38880	TONE CONTROL	1
86	ON TELEDIAL ASSEMBLY	SILENCER SWITCH	1

©John F. Rider, Publisher

MODELS 592,594
Chassis 5N
Schematic, Parts

GENERAL HOUSEHOLD UTILITIES CO.

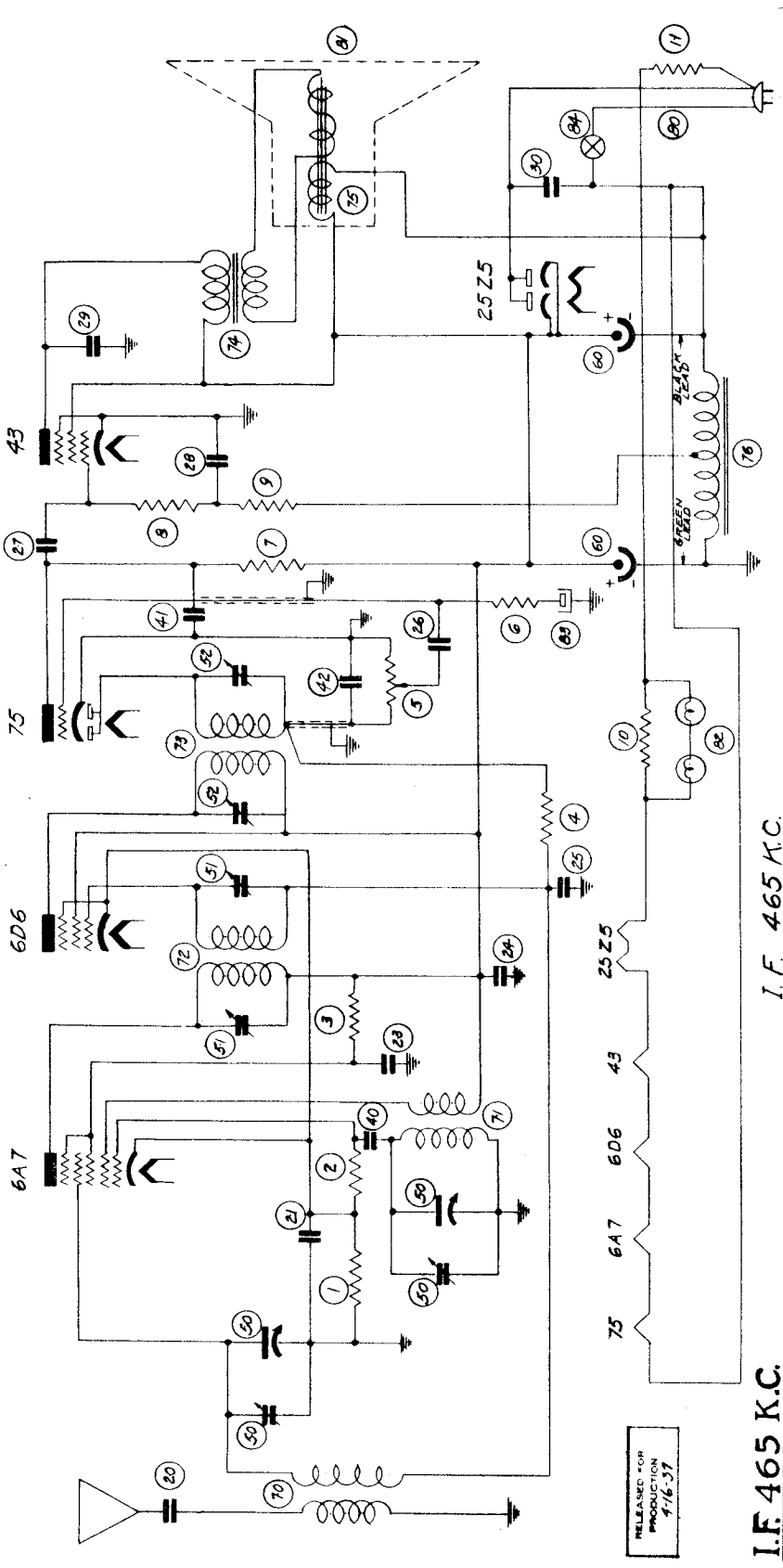

RESISTORS

ITEM	PART	DESCRIPTION	REQ
1	37880	220 OHMS ½ WATT 10%	1
2	37732	36 M OHMS ½ WATT 10%	1
3	37881	10 M OHMS ½ WATT 10%	1
4	36828	1 MEG ½ WATT 20%	1
5	35119	VOLUME CONTROL 250000 Ω	1
6	36923	1 MEG ½ WATT 20%	1
7	36833	220 M OHMS ½ WATT 20%	1
8	37733	360 M OHMS ½ WATT 20%	1
9	36833	220 M OHMS ½ WATT 10%	1
10	27455	CANDOHM 4 OHMS	1
11	LINE & CORD	LINE CORD RES 120 OHMS	1

PAPER CONDENSERS

ITEM	PART	DESCRIPTION	REQ
20	34787	.0058 MFD. 700 VOLT	1
21	29135	1 MFD 200 VOLT	1
23	30143	.05 MFD. 200 VOLT	1
24	29135	.1 MFD. 200 VOLT	1
25	30143	.05 MFD. 200 VOLT	1
26	34417	.01 MFD. 500 VOLT	1
27	34417	.01 MFD. 500 VOLT	1
28	28728	.25 MFD. 200 VOLT	1
29	34787	.0058 MFD. 700 VOLT	1
30	29453	.01 MFD. 400 VOLT	1

MICA CONDENSERS

ITEM	PART	DESCRIPTION	REQ
40	33143	250 MMF.	1
41	33142	1000 MMF	1
42	33143	250 MMF	1

ADJUSTABLE CONDENSERS

ITEM	PART	DESCRIPTION	REQ
50	38279	VARIABLE COND	1
51	35341	1ST I.F. TRIMMER COND	1
52	35342	2ND I.F. TRIMMER COND	1
53			
54			
55			
56			

ELECTROLYTIC CONDENSERS

ITEM	PART	DESCRIPTION	REQ
60	35177	16-16 MFD 150 VOLT	1
61			1

TRANSFORMERS & COILS

ITEM	PART	DESCRIPTION	REQ
70	34946	ANTENNA COIL	1
71	34947	OSCILLATOR COIL	1
72	35270	1ST I.F.	1
73	35288	2ND I.F.	
74	SPKR.	OUTPUT TRANSF.	1
75	SPKR.	FIELD COIL	1
76	35142	FILTER CHOKE	1

MISCELLANEOUS

ITEM	PART	DESCRIPTION	REQ
80	35168	LINE CORD	1
81	35176	SPEAKER	1
82	34816	PILOT LITES	2
83	33883	BIAS CELL	1
84	VOL. CONT.	POWER LINE SWITCH	1
85			

©John F. Rider, Publisher

GENERAL HOUSEHOLD UTILITIES CO.

MODELS 622,624
Chassis 6B,6Q
Schematic,Parts

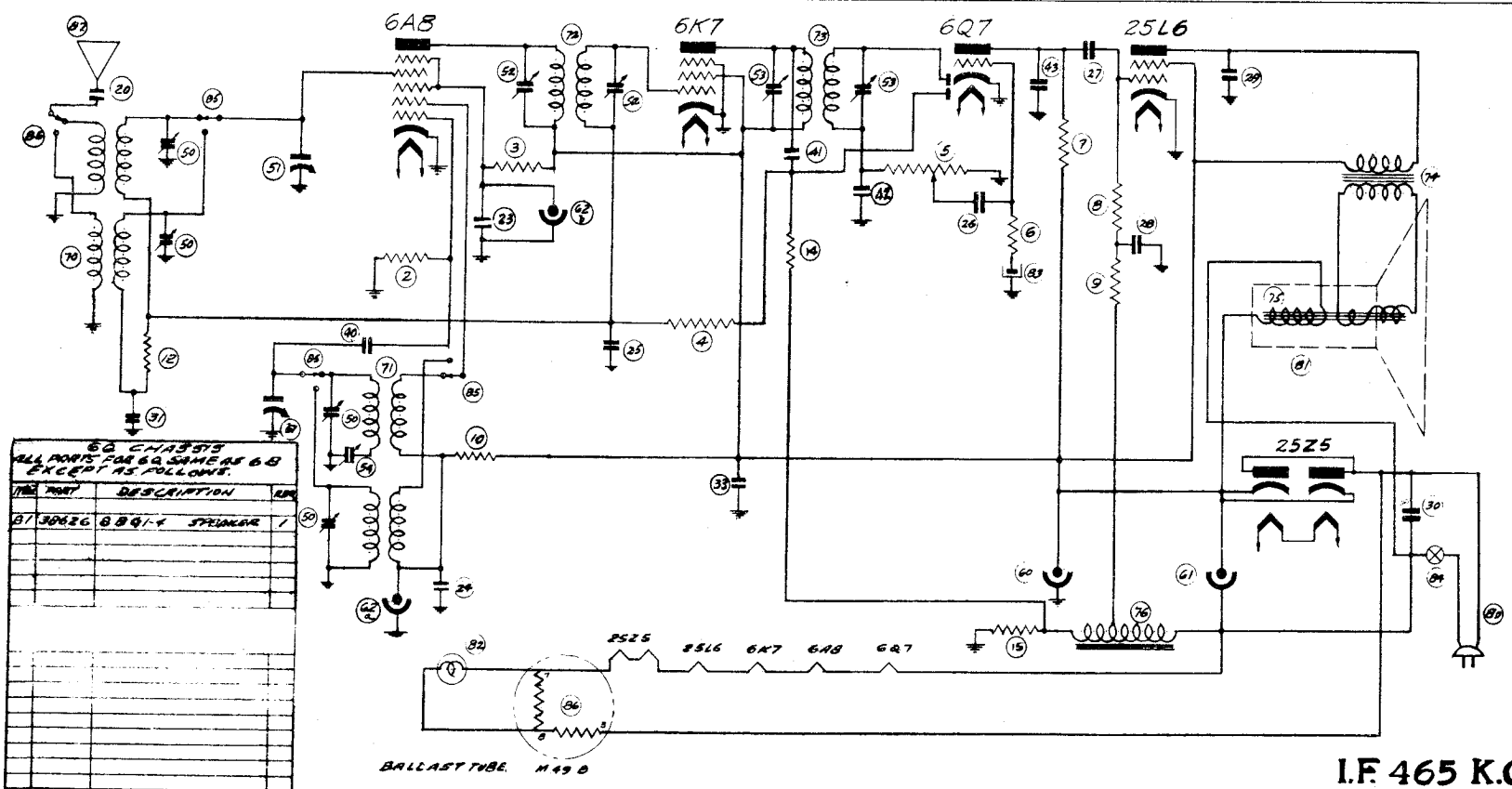

6Q CHASSIS
ALL PARTS FOR 6Q SAME AS 6B EXCEPT AS FOLLOWS.

ITEM	PART	DESCRIPTION	REQ
81	38626	8 B Q1-4 SPEAKER	1

I.F. 465 K.C.

RESISTORS

ITEM	PART	DESCRIPTION	REQ
1			
2	38707	39 M.Ω 1/3 " ±10%	1
3	36973	39 M. " 1/3 " ±10%	1
4	36823	1 MEG. " 1/3 " ±20%	1
5	38068	VOL. CONT. 250 M-OHMS	1
6	36823	1 MEG. OHM 1/3 WATT ±20%	1
7	36833	220 M. " 1/3 " ±10%	1
8	36822	330 M. " 1/3 " ±20%	1
9	36822	330 M. " 1/3 " ±20%	1
10	38706	27 M. " 1/3 " ±20%	1
11			
12	36827	47 M. " 1/3 " ±20%	1
13			
14	37733	560 M. " 1/3 " ±20%	1
15	38708	33 Ω 1/3 " ±10%	1

PAPER CONDENSERS

ITEM	PART	DESCRIPTION	REQ
20	34787	.0058 MFD. 700 V.	1
21			
22			
23	30143	.05 " 200 V.	1
24	29135	.1 " 200 V	1
25	30143	.05 " 200 V	1
26	34417	.01 " 500 V	1
27	34435	.02 " 400 V	1
28	36563	.2 " 200 V	1
29	34708	.025 " 400 V	1
30	29453	.01 " 400 V	1
31	33760	.006 " ±5% 700 V	1
32			
33	29135	.1 " 200 V.	1

ADJUSTABLE CONDENSERS

ITEM	PART	DESCRIPTION	REQ
50	38078	TRIMMER ASSY	1
51	38662	VARIABLE COND	1
52	35341	1ST I.F. TRIMMER	1
53	35342	2ND I.F. TRIMMER	1
54	35170	PADDER COND.	1

MICA CONDENSERS

ITEM	PART	DESCRIPTION	REQ
40	31358	50 M.M.F. ±10%	1
41	31358	50 " ±10%	1
42	33143	250 " ±20%	1
43	33142	1000 " ±20%	1

TRANSFORMERS & COILS

ITEM	PART	DESCRIPTION	REQ
70	38084	ANTENNA COIL	1
71	38085	OSCILLATOR COIL	1
72	35280	1ST I.F.	1
73	35296	2ND I.F.	1
74	38241	OUTPUT TRANS	1
75	38628	FIELD COIL.	1
76	38240	FILTER CHOKE.	1

ELECTROLYTIC CONDENSERS

ITEM	PART	DESCRIPTION	REQ
60	38610	25 MFD. 150 V.	1
61	38608	20 MFD. 150 V.	1
62	38709	DUAL 4 MFD. DRY 100 V.	1
63			

MISCELLANEOUS

ITEM	PART	DESCRIPTION	REQ
80	33471	LINE CORD	1
81	38627	6 B Q1-6 SPEAKER	1
82	38647	PILOT LIGHT.	1
83	33883	BIAS CELL	1
84	VOL CONT	LINE SWITCH	1
85	38540	RANGE SWITCH	1
86	38710	BALLAST TUBE (#49B)	1
87	28127	ANTENNA HANK	

RELEASED FOR PRODUCTION 4-19-37

©John F. Rider, Publisher

MODELS 623,627
Chassis 6K
Schematic,Parts

GENERAL HOUSEHOLD UTILITIES CO.

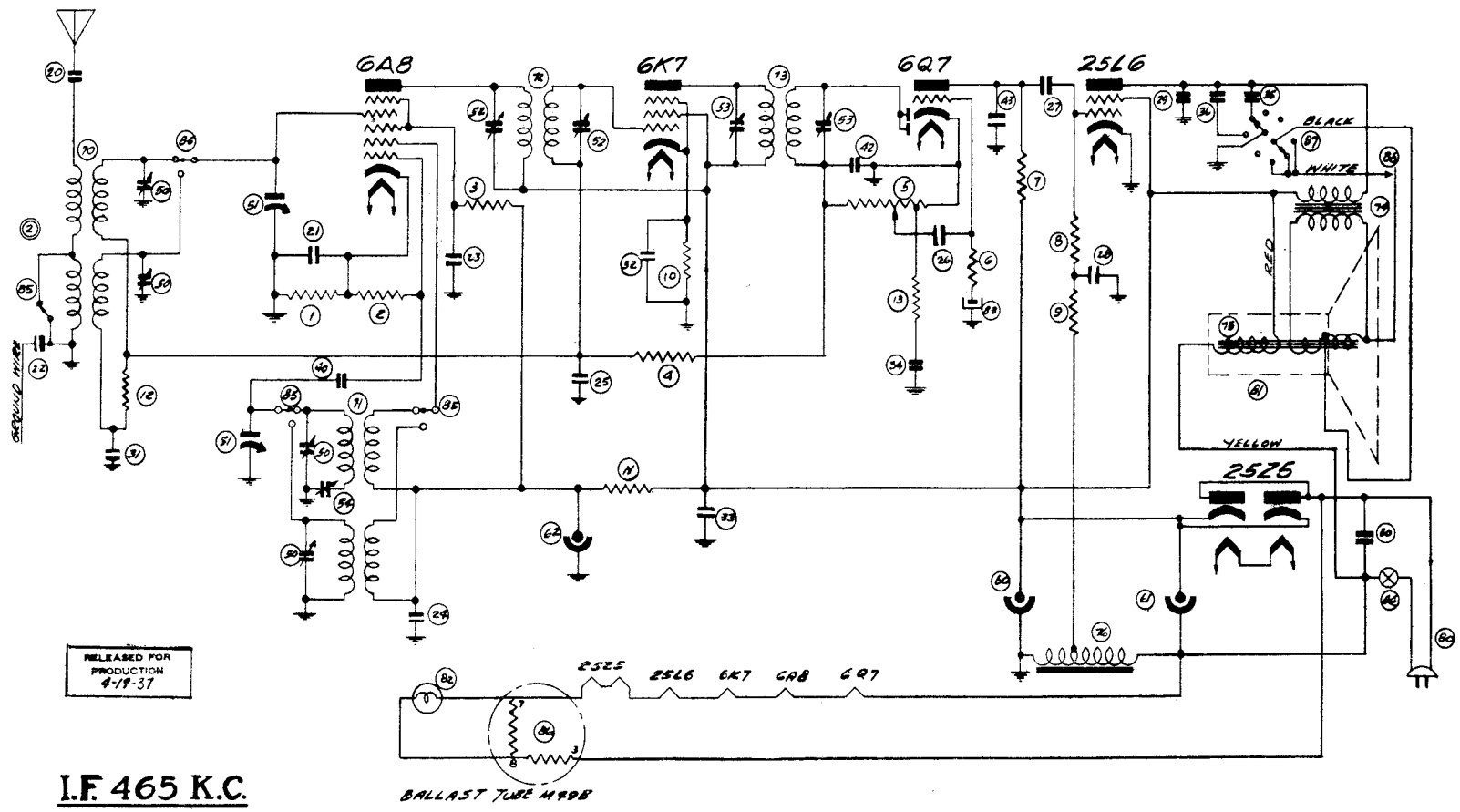

RELEASED FOR PRODUCTION 4-19-37

I.F. 465 K.C.

RESISTORS				
ITEM	PART	DESCRIPTION		REQ.
1	36967	390 Ω ±10%	1/3 W.	1
2	36831	60 M.Ω ±10%	1/2 W.	1
3	36835	4700 Ω ±10%	1/3 W.	1
4	36823	1 MEGOHM ±20%	1/3 W.	1
5	37576	VOL. CONT. 250 M. OHMS		1
5	38614	NEW VOLUME CONTROL		1
6	36823	1 MEGOHM ±20%	1/3 W.	1
7	36833	220 M. OHM ±10%	1/3 W.	1
8	36822	330 M. " ±20%	1/3 W.	1
9	36822	330 M. " ±20%	1/3 W.	1
10	36967	390 " ±10%	1/3 W.	1
11	38624	2700 " ±10%	1/3 W.	1
12	36827	47 M. " ±20%	1/3 W.	1
13	36973	33 M. " ±20%	1/3 W.	1

PAPER CONDENSERS				
ITEM	PART	DESCRIPTION		REQ.
24	29135	.1 M.F.D.	200 V.	1
25	30143	.05 "	200 V.	1
26	34417	.01 "	500 V.	1
27	34435	.02 "	400 V.	1
28	36563	.2 "	200 V.	1
29	34788	.025 "	400 V.	1
30	29453	.01 "	400 V.	1
31	33760	.006 " ±5%	700 V.	1
32	29135	.1 "	200 V.	1
33	29135	.1 "	200 V.	1
34	33665	.03 "	200 V.	1
35	28723	.05 "	400 V.	1
36	28726	.1 "	400 V.	1

ADJUSTABLE CONDENSERS				
ITEM	PART	DESCRIPTION		REQ.
50	38522	TRIMMER ASSEM.		1
51	38662	VARIABLE COND.		1
52	35341	1ST I.F. TRIMMER		1
53	38342	2ND I.F. TRIMMER		1
54	38551	PADDER COND.		1

PAPER CONDENSERS				
20	34787	.0058 M.F.D.	700 V.	1
21	29135	.1 M.F.D.	200 V.	1
22	29135	.1 M.F.D.	200 V.	1
23	30143	.05 M.F.D.	200 V.	1

TRANSFORMERS & COILS				
ITEM	PART	DESCRIPTION		REQ.
70	38796	ANTENNA COIL		1
71	38613	OSCILLATOR COIL		1
72	35275	1ST I.F.		1
73	35291	2ND I.F.		1
74	38241	OUTPUT TRANS.		1
75	SPKR.	FIELD COIL		1
76	38240	FILTER CHOKE		1

MICA CONDENSERS				
40	31358	50 M.M.F.	±10%	1
41				
42	33148	250 "	±20%	1
43	33142	1000 "	±20%	1

MISCELLANEOUS			
ITEM	PART	DESCRIPTION	REQ.
80	33471	LINE CORD	1
81	38626	8861-4 SPEAKER	1
82	38647	PILOT LIGHT	1
83	33883	BIAS CELL	1
84	VOL. CONT.	LINE SWITCH	1
85	38341	RANGE SWITCH	1
86	38710	BALLAST TUBE	1
87	38580	TONE CONTROL	1
88	ON TELEPHONE ASSEMBLY	SILENCER SWITCH	1

ELECTROLYTIC CONDENSERS			
60	38610	25 M.F.D. 150 V.	1
61	38608	20 M.F.D. 150 V.	1
62	38611	4 M.F.D. DRY 150 V.	1

©John F. Rider, Publisher

GENERAL HOUSEHOLD UTILITIES CO.

MODEL 632
Chassis 6H
Schematic, Parts

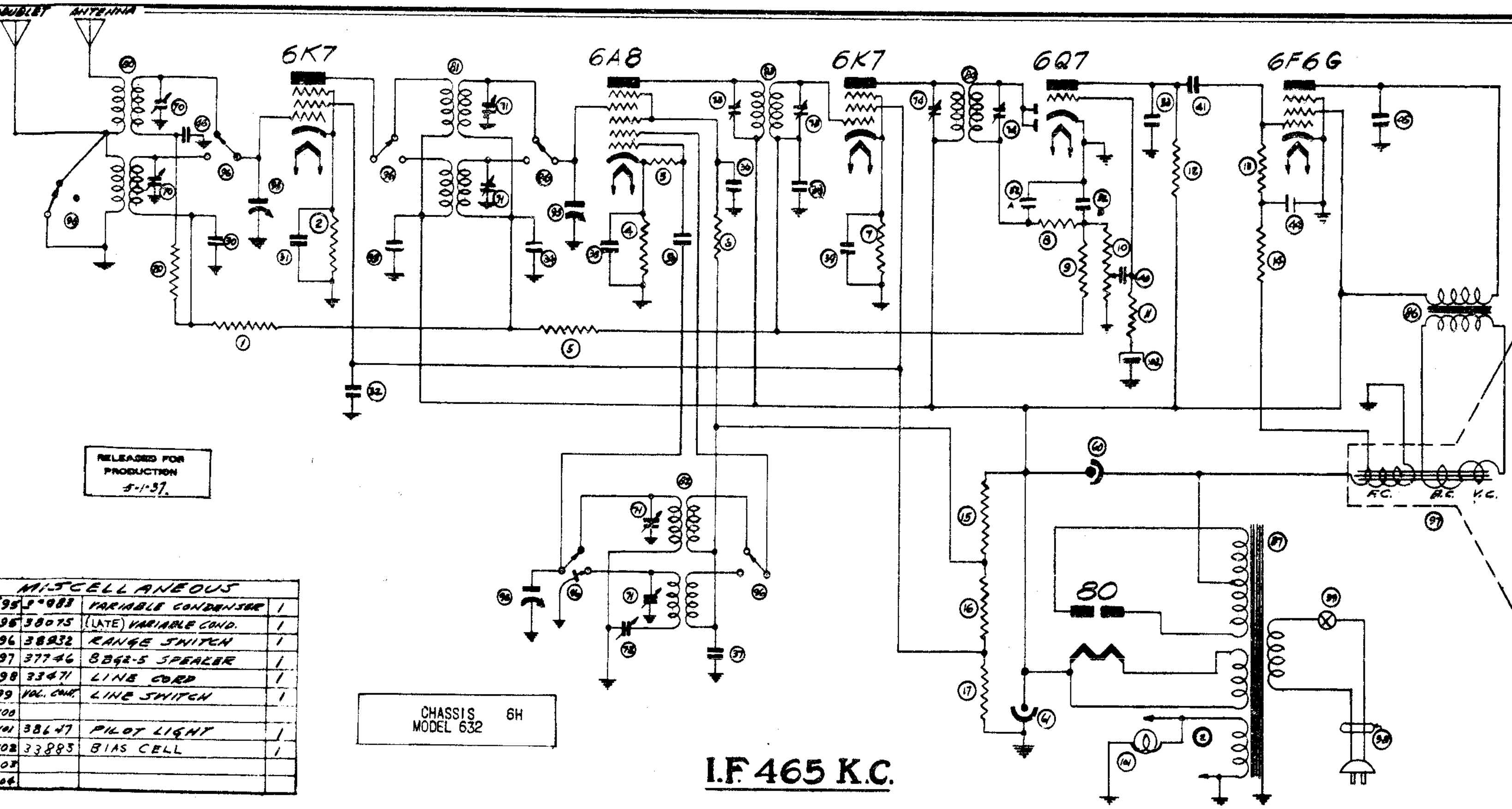

RELEASED FOR PRODUCTION 5-1-37.

CHASSIS 6H
MODEL 632

MISCELLANEOUS

95	3?983	VARIABLE CONDENSER	1
95	38075	(LATE) VARIABLE COND.	1
96	38932	RANGE SWITCH	1
97	37746	8B42-5 SPEAKER	1
98	33471	LINE CORD	1
99	VOL. CONT.	LINE SWITCH	1
100			
101	38647	PILOT LIGHT	1
102	33883	BIAS CELL	1
103			
104			

RESISTORS

ITEM	PART NO.	DESCRIPTION	REQ.
1	36826	100 M. OHM ±20% 1/3 W.	1
2	36825	600 " ±10% 1/3 W.	1
3	36826	100 M. " ±20% 1/3 W.	1
4	38798	470 " ±10% 1/3 W.	1
5	37732	56 M. " ±10% 1/3 W.	1
6	37732	56 M. " ±10% 1/3 W.	1
7	36825	600 " ±10% 1/3 W.	1
8	36827	47 M. " ±20% 1/3 W.	1
9	36823	1 MEG. " ±20% 1/3 W.	1
10	38937	300 M. " VOL. CONTROL	1
11	36823	1 MEG. " ±20% 1/3 W.	1
12	36833	250 M. " ±10% 1/3 W.	1
13	37733	560 M. " ±20% 1/3 W.	1
14	36826	100 M. " ±20% 1/3 W.	1
15	36822	5 M. " ±20% 1 W.	1
16	36971	20 M. " ±10% 1 W.	1
17	36827	47 M. " ±20% 1/3 W.	1
18			
19			
20	36826	100 M. " 1/3 W ±20%	1

PAPER CONDENSERS

ITEM	PART NO.	DESCRIPTION	REQ.
30	30143	.05 MFD. 200 V.	1
31	29136	.1 " 200 V.	1
32	29135	.1 " 200 V.	1
33	28726	.1 " 400 V.	1
34	30143	.05 " 200 V.	1
35	29135	.1 " 200 V.	1
36	28723	.05 " 400 V.	1
37	28726	.1 " 400 V.	1
38	30148	.05 " 200 V.	1
39	29135	.1 " 200 V.	1
40	34417	.01 " 500 V.	1
41	34435	.02 " 500 V.	1
42			
43			
44	28728	.25 " 200 V.	1
45	31864	.005 " 700 V.	1
46	33760	.006 " ±5% 700 V.	1
47			
48			
49			

MICA CONDENSERS

ITEM	PART NO.	DESCRIPTION	REQ.
50	31358	50 M.M.F. ±10%	1
51			
52	29074	A = 250 MMF. B = 100 MMF.	1
53	31361	500 M.M.F. ±20%	1
54			
55			

ELECTROLYTIC CONDENSERS

ITEM	PART NO.	DESCRIPTION	REQ.
60	33369	12 M.F.D. 450 V.	1
61	33469	18 " 300 V.	1
62			

ADJUSTABLE CONDENSERS

ITEM	PART NO.	DESCRIPTION	REQ.
70	37729	ANT. TRIMMER ASSEM.	1
71	37730	DET. OSC. " "	1
72	35170	PADDER	1
73	35341	1ST I.F. TRIMMER	1
74	35342	2ND I.F. "	1
75			
76			
77			

TRANSFORMERS & COILS

ITEM	PART NO.	DESCRIPTION	REQ.
80	38885	ANT. COIL	1
81	36887	DET. COIL	1
82	38886	OSC. COIL	1
83	35281	1ST I.F.	1
84	35286	2ND I.F.	1
85			
86	37859	OUTPUT TRANS.	1
87	37718	POWER TRANS.	1
88			
89			
90			

©John F. Rider, Publisher

MODEL 663
Chassis 6E
Schematic, Parts

GENERAL HOUSEHOLD UTILITIES CO.

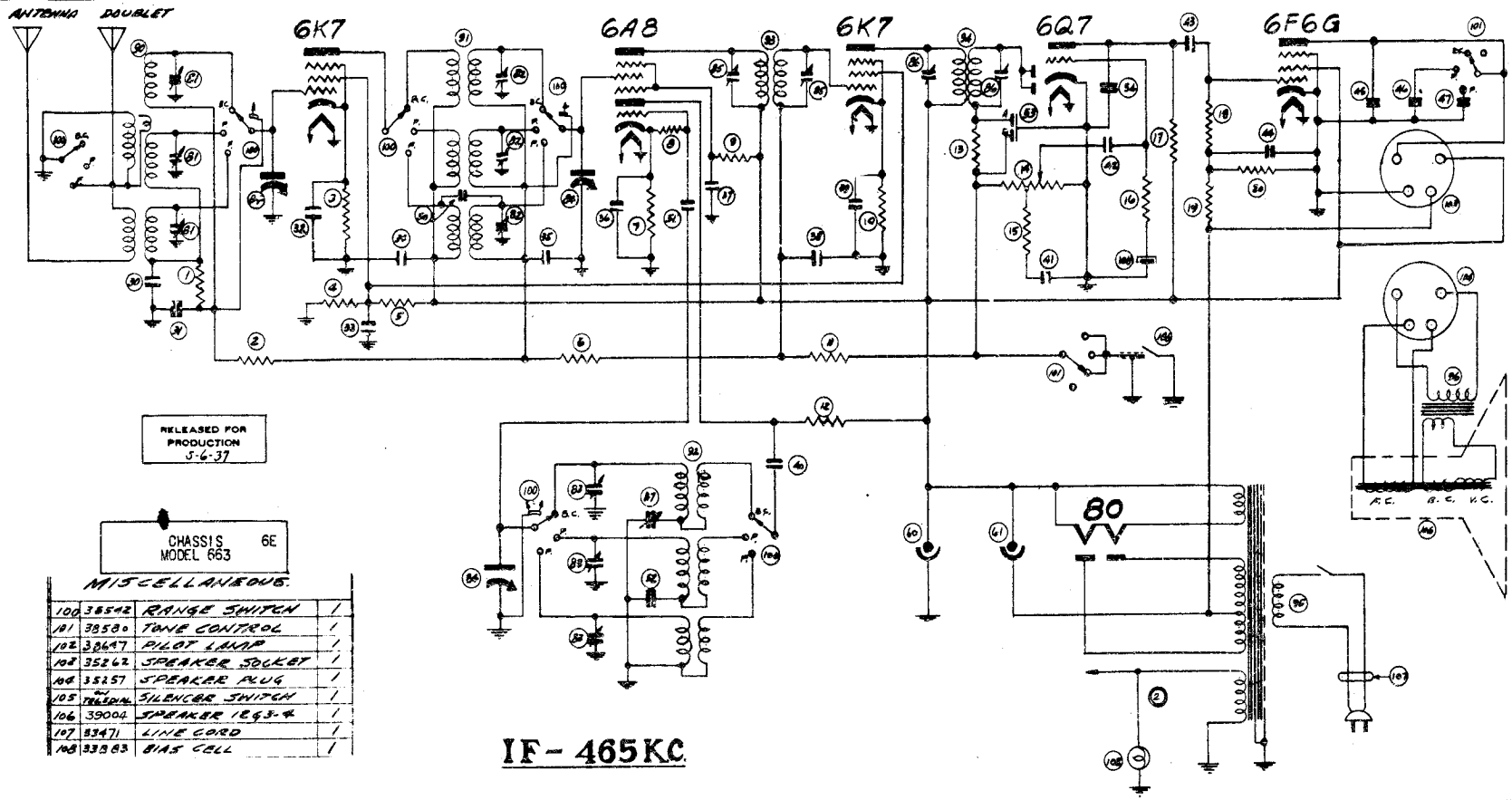

IF - 465KC

MISCELLANEOUS.

100	38542	RANGE SWITCH	1
101	38580	TONE CONTROL	1
102	38647	PILOT LAMP	1
103	35262	SPEAKER SOCKET	1
104	35257	SPEAKER PLUG	1
105	38 TELEDIAL	SILENCER SWITCH	1
106	39004	SPEAKER 12G3-4	1
107	33471	LINE CORD	1
108	33883	BIAS CELL	1

RESISTORS

ITEM	PART NO.	DESCRIPTION	REQ.
1	36826	100 M OHM ±20% ½ W.	1
2	36826	100 M. " ±20% ½ W.	1
3	36967	390 " ±10% ½ W.	1
4	36827	47M. " ±20% ½ W.	1
5	35105	33M. " ±20% 1 W.	1
6	36826	100M. " ±20% ½ W.	1
7	36967	390 " ±10% ½ W.	1
8	37732	56M. " ±10% ½ W.	1
9	36759	68M. " ±10% ½ W.	1
10	36825	600 " ±10% ½ W.	1
11	36823	1MEG. " ±20% ½ W.	1
12	36971	20M. " ±10% 1 W.	1
13	36827	47M. " ±20% ½ W.	1
14	38994	250M. " VOL. CONTROL W.	1
15	36973	33M. " ±20% ½ W.	1
16	36823	1MEG. " ±20% ½ W.	1
17	36833	220M. " ±20% ½ W.	1
18	37733	560M. " ±20% ½ W.	1
19	35107	560M. " ±10% ½ W.	1
20	35106	150M. " ±10% ½ W.	1

PAPER CONDENSERS

ITEM	PART NO.	DESCRIPTION	REQ.
30	33760	.006 M.F.D. 700 V.	
31	30143	.05 " 200 V.	
32	29135	.10 " 200 V.	
33	29135	.10 " 200 V.	
34	28726	.10 " 400 V.	
35	30143	.05 " 200 V.	
36	29135	.10 " 200 V.	
37	28723	.05 " 400 V.	
38	30143	.05 " 200 V.	
39	29135	.10 " 200 V.	
40	34417	.01 " 500 V.	
41	33663	.03 " 200 V.	
42	34417	.01 " 500 V.	
43	34435	.02 " 400 V.	
44	28728	.25 " 200 V.	
45	28717	.002 " 700 V.	
46	29813	.004 " 700 V.	
47	34417	.01 " 500 V.	

MICA CONDENSERS

ITEM	PART NO.	DESCRIPTION	REQ.
50	32989	10 M.M.F. ±20%	1
51	31358	50 " ±10%	1
52	33262	1065 " ±5%	1
53	29074	A=250 " B=100 MMF.	1
54	31861	500 " ±20%	1

ELECTROLYTIC CONDENSERS.

60	33469	18 M.F.D. 300V. REG.	1
61	33369	12 " , 450V.	1

ADJUSTABLE CONDENSERS

ITEM	PART NO.	DESCRIPTION	REQ.
81	35655	R.F. TRIMMER STRIP	1
82	35654	" " "	1
83	35655	" " "	1
84	38983	GANG CONDENSER	1
84	38075	(LATE) VARIABLE	1
85	35341	I.F. TRIMMER	1
86	35342	" "	1
87	38551	E.C. PADDER	1

TRANSFORMERS & COILS.

ITEM	PART NO.	DESCRIPTION	REQ.
90	38882	ANT. COIL	1
91	38884	DET. COIL	1
92	38883	OSC. COIL	1
93	35282	1ST I.F.	1
94	35297	DIODE I.F.	1
95	37718	POWER TRANS.	1
96	37869	OUTPUT TRANS.	1

©John F. Rider, Publisher

MODEL 1067
Chassis 10D
Schematic, Parts

GENERAL HOUSE

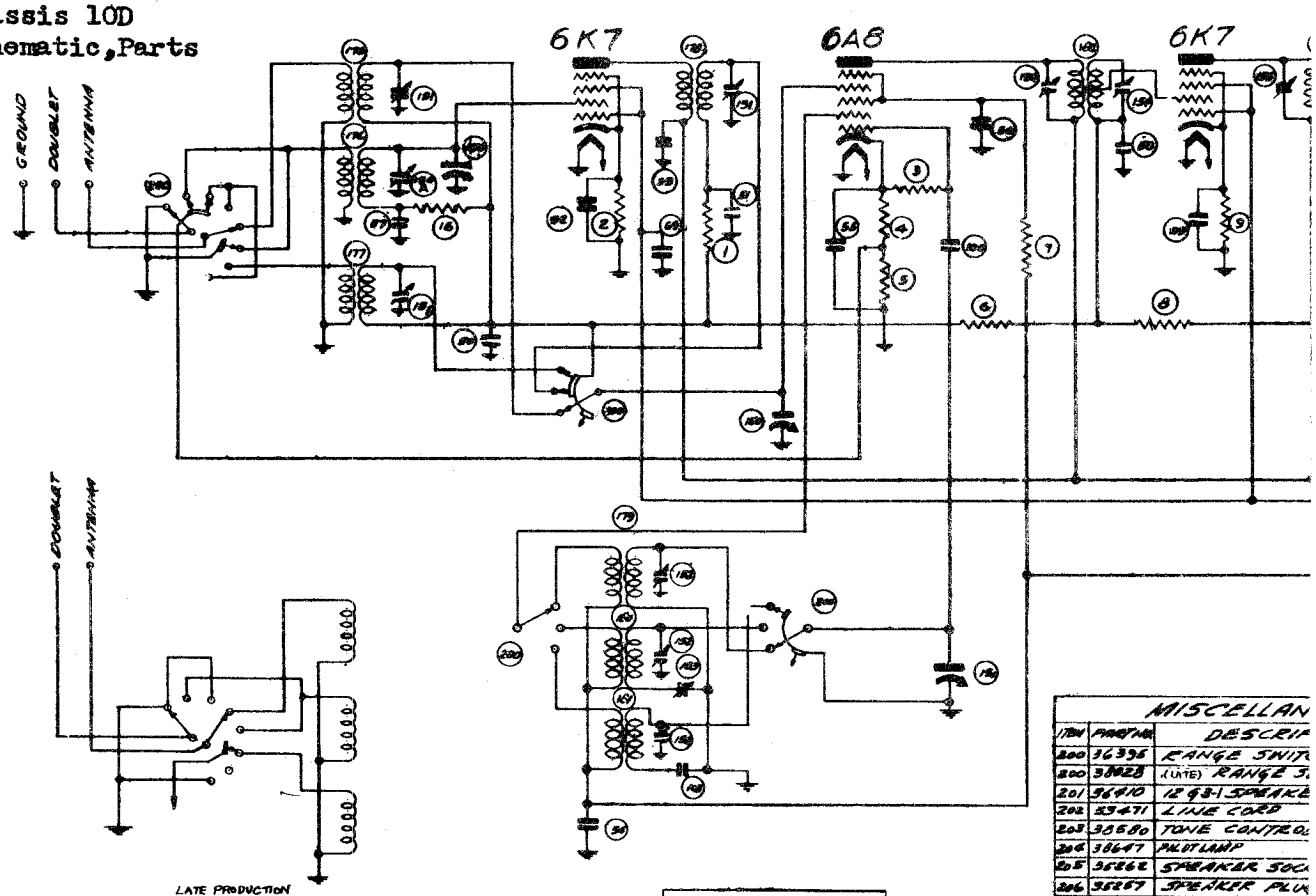

CHASSIS 10D
MODEL 1067

TENTATIVE
SCHEMATIC AND
PARTS LIST

GRUNOW RADIO

GENERAL HOUSEHOLD
UTILITIES COMPANY

CHICAGO, U.S.A.

MISCELLAN		
ITEM	PART NO.	DESCRIP
200	36395	RANGE SWIT
200	38028	(LATE) RANGE S
201	36410	12 G3-1 SPEAKE
202	33471	LINE CORD
203	38580	TONE CONTRO
204	38647	PILOT LAMP
205	35262	SPEAKER SOC
206	35257	SPEAKER PLU
207	36727 38074	LINE SWITCH (
208	36753	PHONOGRAPH
209	TELEDYNE ASSEMBLY	SILENCER SW

RESISTORS				RESISTORS			
ITEM	PART NO.	DESCRIPTION	REQ.	ITEM	PART NO.	DESCRIPTION	REQ.
1	36826	100 M OHMS ±20% 1/3 W.	1				
2	36825	600 " ±10% 1/3 W.	1	31			
3	36829	47 M. " ±10% 1/3 W.	1				
4	36967	390 " ±10% 1/3 W.	1				
5	36967	390 " ±10% 1/3 W.	1				
6	36827	47 M. " ±20% 1/3 W.	1				
7	36829	47 M. " ±10% 1/3 W.	1				
8	36823	1 MEG. " ±20 1/3 W.	1				
9	36825	600 " ±10 1/3 W.	1				
10	36887	1000 " ±10 1/3 W.	1				
11	36828	2200 " ±20 1/3 W.	1				
12	36829	47 M. " ±10 1/3 W.	1				
13	36823	220 M. " ±10 1/3 W.	1				
14	36727	1 MEG. " VOL. CONT.	1				
14	38074	NEW 1 MEG. VOL. CONT.	1				
15	36827	47 M. OHMS ±20 1/3 W.	1				
16	36826	100 M. " ±20 1/3 W.	1				
17							
18							
19	33877	3000 " ±10 1 W.	1				
20	36836	9000 " ±10 2 W.	1				
21	36832	1500 " ±10 1/3 W.	1				
22	36830	68 M. " ±20 1/2 W.	1				
23	36821	330 M. " ±5 1/2 W.	1				
24	36861	24,500 " ±5 1/2 W.	1				
25	36831	68 M. " ±10 1/3 W.	1				
26	36822	330 M. " ±10 1/3 W.	1				
27	36837	500 " ±10 2 W.	1				
28	36761	805 " ±10 2 W.	1				
29							
30	36838	14 M. " ±10 1 W.	1				

PAPER CONDENSERS					MICA CO		
ITEM	PART NO.	DESCRIPTION		REQ.	ITEM	PART NO.	
50	33760	.006 M.F.D.	700 V.	1	100	31358	5
51	36486	.021 "	400 V.	1	101	29074	DU
52	29135	.1 "	200 V.	1	102	31861	5
53	28726	.1 "	400 V.	1	103	33262	10
54	28723	.05 "	"	1	104	24231	10
55	29135	.1 "	200 V.	1			
56	28723	.05 "	400 V.	1			
57	30143	.05 "	200 V.	1			
58	30143	.05 "	"	1			
59	29135	.1 "	"	1			
60	29135	.1 "	"	1			
61	29567	.02 "	400 V.	1			
62	34417	.01 "	500 V.	1			
63				1			
64	30143	.05 "	200 V.	1			
65	34436	.05 "	400 V.	1			
66	34436	.05 "	"	1			
67	37502	.001 "	700 V.	1			
68	31866	.01 "	500 V.	1			
69	29135	.1 "	200 V.	1			
70	28717	.002 "	700 V.	1			

©John F. Rider, Publisher

HOLD UTILITIES CO.

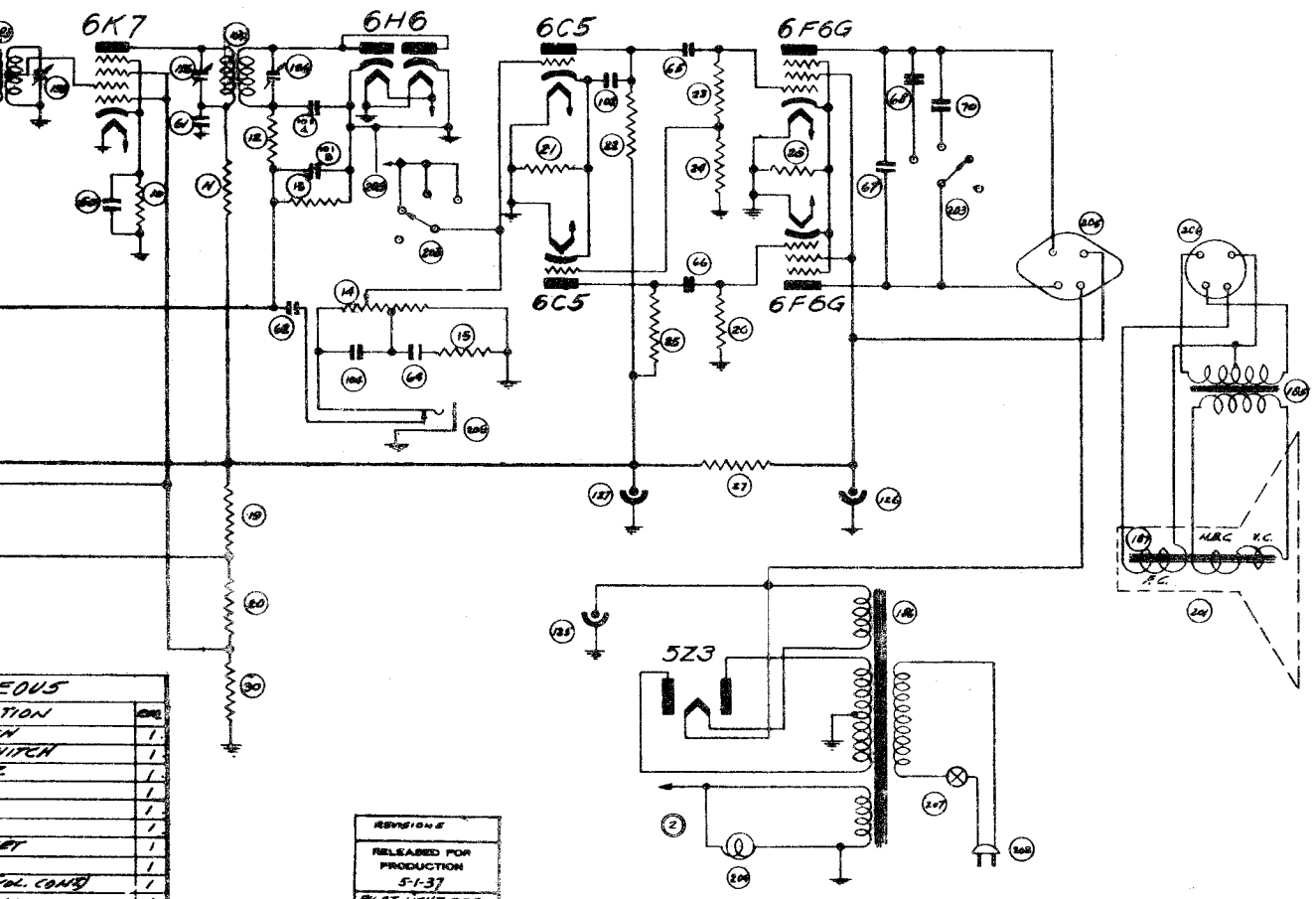

EOUS	
TION	REQ.
N	1
ITCH	1
E	1
	1
	1
	1
ET	1
	1
OL. CONT.	1
JACK	1
TCH	1

REVISIONS
RELEASED FOR PRODUCTION 5-1-37
PILOT LIGHT RES. #38716 (ITEM 31) REMOVED. 5-14-37 A.D.H.

I.F. - 465 K.C.

NDENSERS		ELECTROLYTIC CONDENSERS			
ESCRIPTION	REQ.	ITEM	PART NO.	DESCRIPTION	REQ.
M.M.F. ±10%	1	125	36752	25 MFD 450V.	1
L A=250 B=100 M.M.F.	1	126	36720	30 " 300V.	1
MMF ±20%	1	127	36721	12 " 300V.	1
5 MMF ±5%	1				
M.M.F. STYLE 3 ±20%	1				

ADJUSTABLE CONDENSERS				TRANSFORMERS & COILS			
ITEM	PART NO.	DESCRIPTION	REQ.	ITEM	PART NO.	DESCRIPTION	REQ.
150	38983	VARIABLE CONDENSER	1	175	38010	"F" BAND ANT. COIL	1
				176	38015	"B" " " "	1
				177	38012	"F" " " "	1
				178	38013	"B" " INTERSTAGE "	1
151	35654	ANT. COIL TRIMMER STRIP	1	179	38009	"F" " OSC. "	1
152	35655	OSC. " " "	1	180	38014	"B" " " "	1
153	36170	PADDER CONDENSER	1	181	38011	"F" " " "	1
153				182	38000	1ST I.F. TRANS.	1
154	36757	1ST I.F. TRIMMER COND.	1	183	38001	2ND I.F. "	1
155	36757	2ND I.F. " "	1	184	38002	DIODE I.F. "	1
156	35342	DIODE I.F. " "	1	185	35264	OUTPUT "	1
				186	38100	POWER "	1
				187	SPKR.	FIELD COIL	1
				188			

GENERAL HOUSE

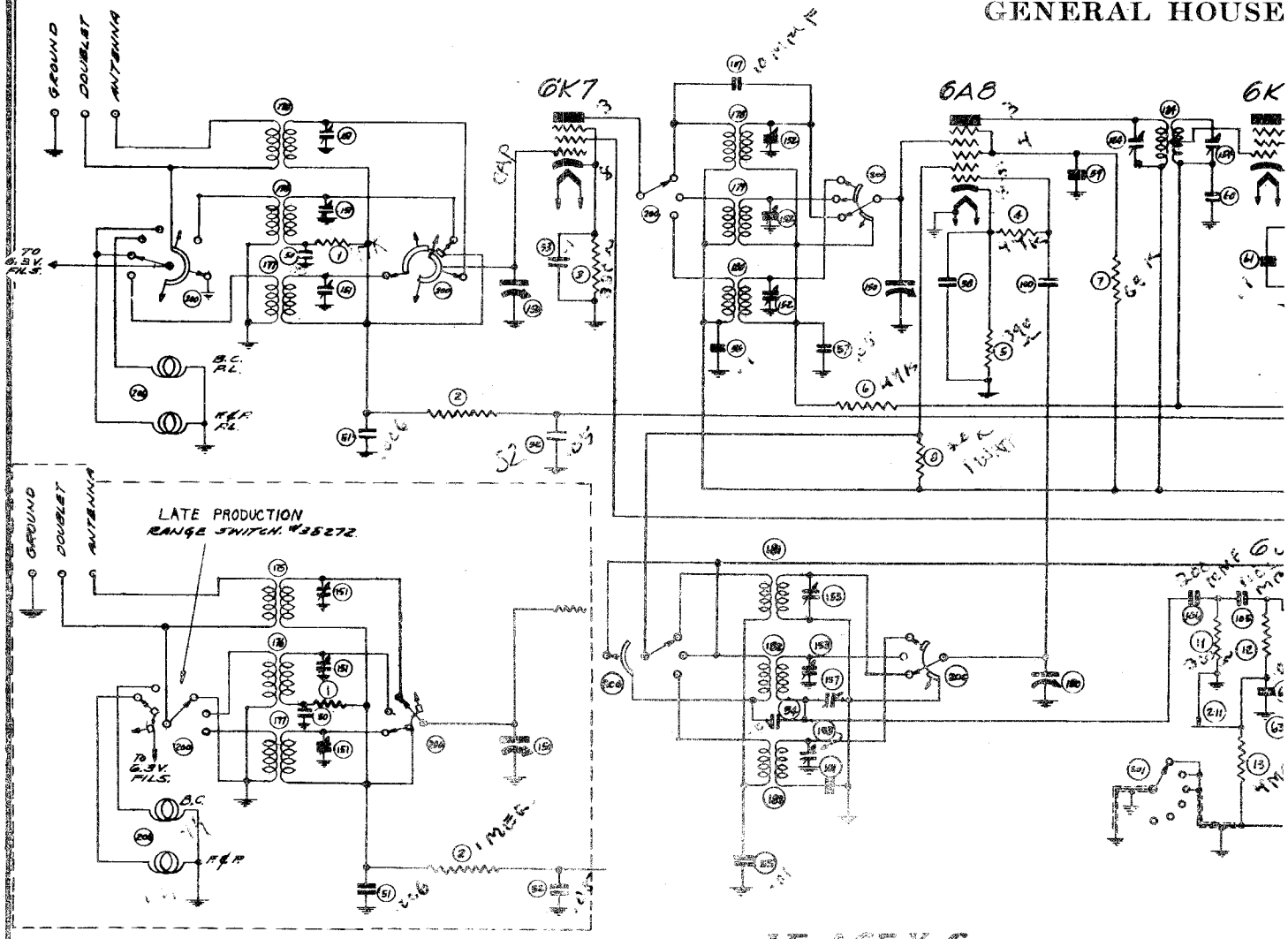

RESISTORS

ITEM	PART No.	DESCRIPTION	REQ.
1	36827	47M. OHMS ±20% (R.S.) ½ W.	1
2	36823	1MEG. " ±20% ½ W.	1
3	36967	390 " ±10% ½ W.	1
4	36829	47M. " ±10% ½ W.	1
5	36967	390 " ±10% ½ W.	1
6	36827	47M. " ±20% ½ W.	1
7	36759	6.8M. " ±10% ½ W.	1
8	36971	20M. " ±10% 1 W.	1
9	36967	390 " ±10% ½ W.	1
10	36967	390 " ±10% ½ W.	1
11	37591	300 " ±10% ½ W.	1
12	36826	100M. " ±20% ½ W.	1
13	36969	1MEG. " ±20% ½ W.	1
14	36976	500 " ±5% ½ W.	1
15	36863	500 " ±10% ½ W.	1
16	36838	1M. " ±10% 1 W.	1
17	38244	12M. " ±10% 2 W.	1
18	36828	220M. " ±20% ½ W.	1
19	36823	33M. " ±10% ½ W.	1
20	36823	1MEG. " ±20% ½ W.	1
21	36774	470M. " ±5% ½ W.	1
22	36972	15M. " ±10% ½ W.	1
23	36829	47M. " ±10% ½ W.	1
24	36823	1MEG. " ±20% ½ W.	1
25	38267	1 MEG. VOL. CONTROL	1
26	36833	220M. OHMS ±10% ½ W.	1
27	36832	150Ω " ±10% ½ W.	1
28	38970	33M. " ±10% ½ W.	1
29	38970	33M. " ±10% ½ W.	1
30	36762	330M. " ±5% ½ W.	1
31	30971	20M. " ±5% ½ W.	1
32	36761	205 " ±10% 2 W.	1
33	36822	330M. " ±10% ½ W.	1
34	36837	500 " ±10% 2 W.	1

PAPER CONDENSERS

ITEM	PART NO.	DESCRIPTION	TOL.
50	30143	.05 MFD. (R.S.)	2,000 V.
51	33760	.006 " (R.S.)	700 V.
52	30165	.05 "	200 V.
53	29135	.1 "	200 V.
54	38417	.01 " (R.S.)	500 V.
55	38417	.01 " (R.S.)	500 V.
56	28726	.1 "	400 V.
57	30143	.05 " (R.S.)	2,000 V.
58	29135	.1 "	200 V.
59	28726	.05 "	400 V.
60	30165	.05 "	200 V.
61	29135	.1 "	200 V.
62	30143	.05 "	2,000 V.
63	29135	.1 "	200 V.
64	29135	.1 "	200 V.
65	29135	.1 "	200 V.
66	28726	.1 "	400 V.
67	36562	.2 "	200 V.
68	38417	.01 "	500 V.
69	29653	.01 "	400 V.
70	34436	.05 "	400 V.
71	34436	.05 "	400 V.
72	37502	.001 "	700 V.
73	31856	.01 "	500 V.
74	28717	.002 "	700 V.
75	34485	.02 " MOULDED	400 V.
76	34485	.02 " MOULDED	400 V.
77	28717	.002 "	700 V.

MICA CONDENSERS

ITEM	PART NO.	DESCRIPTION	REQ.
100	31368	50 MMFD. (R.S.) ±10%	1
101	37862	400 " (R.S.) ±5%	1
102	28851	100 " (R.S.)	1
103	28851	100 "	1
104	31640	30 " (R.S.)	1
105	28259	1000 " ±10%	1
106	36896	200 " ±10%	1
107	32985	10 " (R.S.) ±20%	1

ELECTROLYTIC CONDEN-

ITEM	PART NO.	DESCRIPTION
125	36752	25 M.F.D. 450
126	36720	30 " 300
127	36721	12 " "

©John F. Rider, Publisher

HOLD UTILITIES CO.

MODEL 1091
Chassis 10G
Schematic, Parts

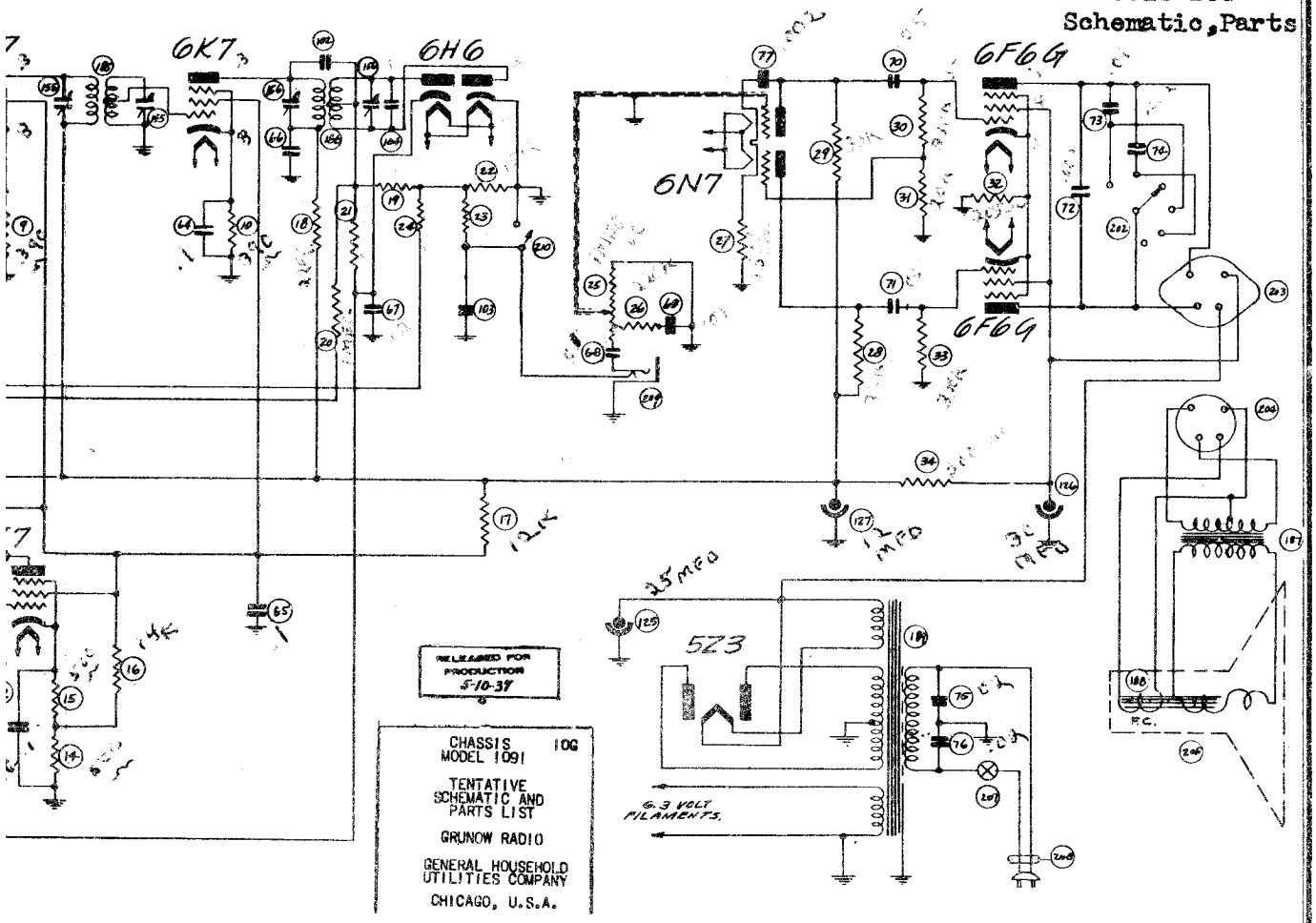

ERS		ADJUSTABLE CONDENSERS				TRANSFORMERS & COILS.				MISCELLANEOUS			
	REQ.	ITEM	PART NO.	DESCRIPTION	REQ.	ITEM	PART NO.	DESCRIPTION	REQ.	ITEM	PART NO.	DESCRIPTION	REQ.
	1	150	37998	VARIABLE COND.	1	175	38276	"F" BAND ANT. COIL	1	200	36725	RANGE SWITCH	
	1	151	35655	3GANG TRIMMER COND.	1	175	38276	(LATE) "F" " " "	1	200	38272	(LATE) RANGE SWITCH	1
	1	152	35654	" " " "	1	176	38270	"B" " " "	1	201	36714	A.F.C. "	
		153	35655	" " " "	1	176	38271	(LATE) "B" " " "	1	202		TONE CONTROL SWITCH	1
		154	36758	1ST I.F. TRIMMER "	1	177	38278	"D" " " "	1	201	38582	(LATE) A.F.C. "	
		155	36758	2ND " " "	1	177	38275	(LATE) "E" " " "	1	202		TONE CONTROL SWITCH	1
		156	36439	DISCRIM. " "	1	178	38277	"E" " DET. "	1	203	35262	SPEAKER SOCKET	1
		157	36975	195 KMF PADDER	1	179	38273	"B" " " "	1	204	35257	SPEAKER PLUG	1
						180	38276	"D" " " "	1	205	36628	12 99-1 SPEAKER	1
						181	38273	"A" " OSC. "	1	206	36316	PILOT LIGHT	2
						182	38274	"B" " " "	1	207	W. CONT.	LINE SWITCH	1
						183	38275	"D" " " "	1	208	33471	LINE CORD	1
						184	38224	1ST I.F. TRANS.	1	209	36753	PHONO JACK	1
						185	38225	2ND " "	1	210	TELEDIAL ASSEM.	INTERSTATION SILENCER SWITCH	1
						186	36452	DISCRIMINATOR TRANS.	1	211	TELEDIAL ASSEM.	TELEDIAL SWITCH	1
						187	35264	OUTPUT TRANS.	1				
						188	SPARE	FIELD COIL	1				
						189	38791	POWER TRANS.	1				

MODELS 1181,1183,1185
Chassis 11H
Schematic, Parts

GENERAL HC

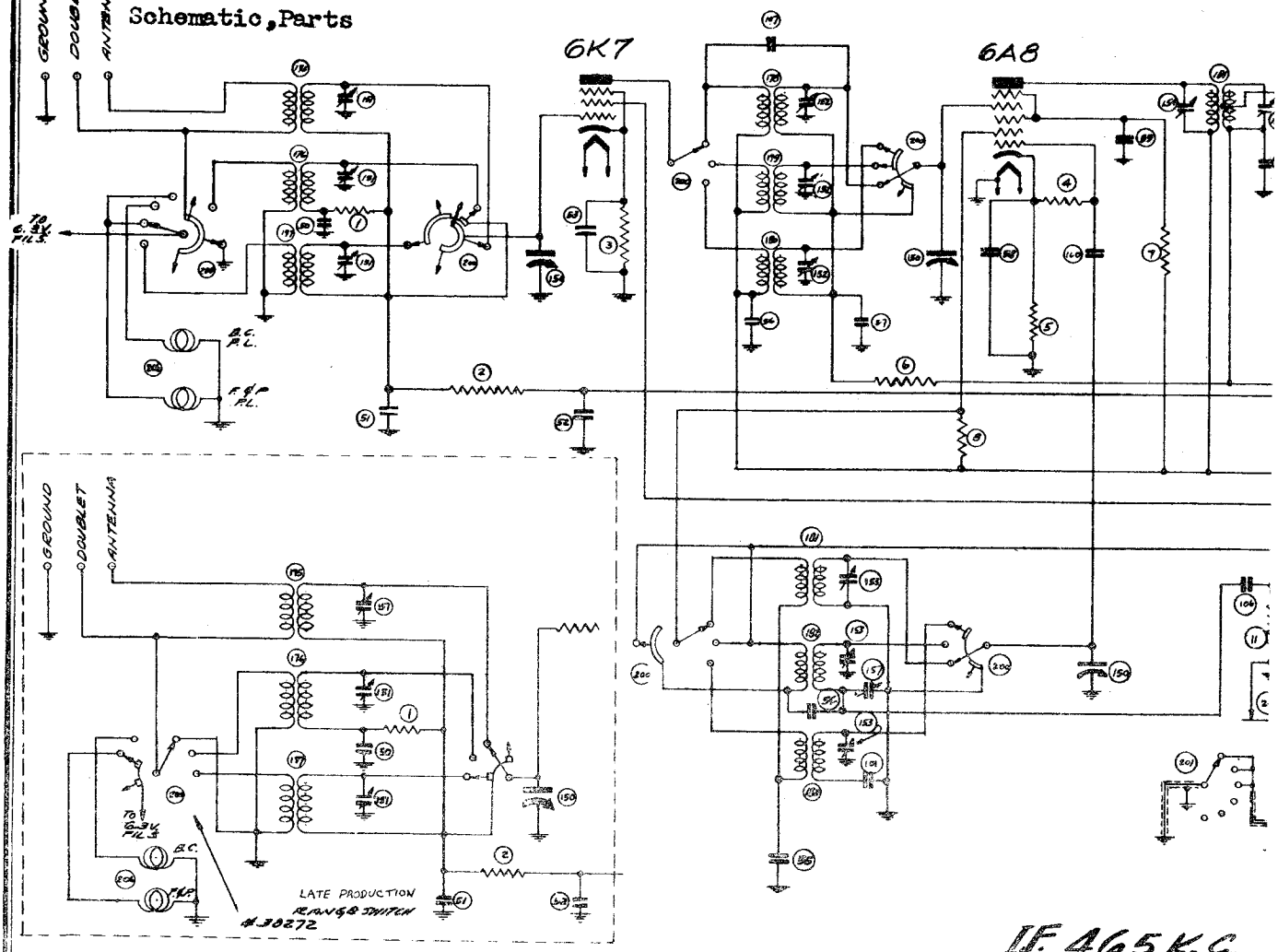

IF. 465 K.C.

RESISTORS

ITEM	PART NO.	DESCRIPTION	REQ.
1	36827	47M. OHMS (R.S.) ± 20% ½ W.	1
2	36823	1MEG. " ± 20% ½ W.	
3	36967	390 " ± 10% ½ W.	
4	36829	47M. " ± 10% ½ W.	
5	36967	390 " ± 10% ½ W.	
6	36827	47M. " ± 20% ½ W.	
7	36759	68M. " ± 10% 1 W.	
8	36971	20M. " ± 10% 1 W.	
9	36967	390 " ± 10% ½ W.	
10	36967	390 " ± 10% ½ W.	
11	37591	300 " ± 10% ½ W.	
12	36826	100M. " ± 20% ½ W.	
13	36969	4MEG. " ± 20% ½ W.	
14	36976	500 " ± 5% ½ W.	
15	36863	500 " ± 10% ½ W.	
16	36838	14M. " ± 10% ½ W.	
17	38246	12M. " ± 10% 2 W.	
18	36820	220M. " ± 20% ½ W.	
19	36822	330M. " ± 10% ½ W.	
20	36823	1MEG. " ± 20% ½ W.	
21	36774	470M. " ± 5% ½ W.	
22	38794	100M. " ± 10% ½ W.	
23	36829	47M. " ± 10% ½ W.	
24	36823	1MEG. " ± 20% ½ W.	
25	38267	1 MEG. VOL. CONTROL W.	
26	36833	220M OHMS ± 10% ½ W.	
27	36832	150M " ± 10% ½ W.	
28	36831	68M. " ± 10% ½ W.	
29	36830	68M. " ± 20% ½ W.	
30	36762	330M. " ± 5% ½ W.	
31	36841	24500 " ± 5% ½ W.	
32	36983	260 " ± 10% 2 W.	
33	36822	330M. " ± 10% ½ W.	
34	36837	500 " ± 10% 2 W.	
35	36829	47M. OHMS ± 10% ½ W.	1

PAPER CONDENSERS

ITEM	PART NO.	DESCRIPTION	REQ.
50	30143	.05 MFD. (R.S.) 200V.	1
51	33760	.006 " (R.S.) 700 V.	1
52	30143	.05 " 200V.	1
53	29135	.1 " 200 V.	1
54	34417	.01 " (R.S.) 500 V.	1
55	34417	.01 " (R.S.) 500 V.	1
56	28726	.1 " 400 V.	1
57	30143	.05 " (R.S.) 200 V.	1
58	29135	.1 " 200 V.	1
59	28723	.05 " 400 V.	1
60	30143	.05 " 200 V.	1
61	29135	.1 " 200 V.	1
62	30143	.05 " 200 V.	1
63	29135	.1 " 200 V.	1
64	29135	.1 " 200 V.	1
65	29135	.1 " 200 V.	1
66	28726	.1 " 400V.	1
67	36563	.2 " 200V.	1
68	34417	.01 " 500V.	1
69	29453	.01 " 400V.	1
70	34436	.05 " 400V.	1
71	34436	.05 " 400V.	1
72	28717	.002 " 700V.	1
73	33816	.015 " 900V.	1
74	31864	.005 " 700V.	1
75	34485	.02 " MOULDED 400V.	1
76	34485	.02 " 400V.	1

MICA CONDENSERS

ITEM	PART NO.	DESCRIPTION	REQ.
100	31358	50 M.M.F. (R.S.) ± 10 %	1
101	33262	1085 " (R.S.) ± 5%	1
102	24251	100 " (DISC.)	1
103	24251	100 "	1
104	36460	80 " (DISC.)	1
105	24254	1000 " ± 10 %	1
106	36996	800 " ± 10 %	1
107	32989	10 " (R.S. ± 20 %	1
108	24254	1000 "	1

ELECTROLYTIC

ITEM	PART NO.	DE
125	36752	25 M.F.
126	36720	30 "
127	36721	12 "

©John F. Rider, Publisher

USEHOLD UTILITIES CO.

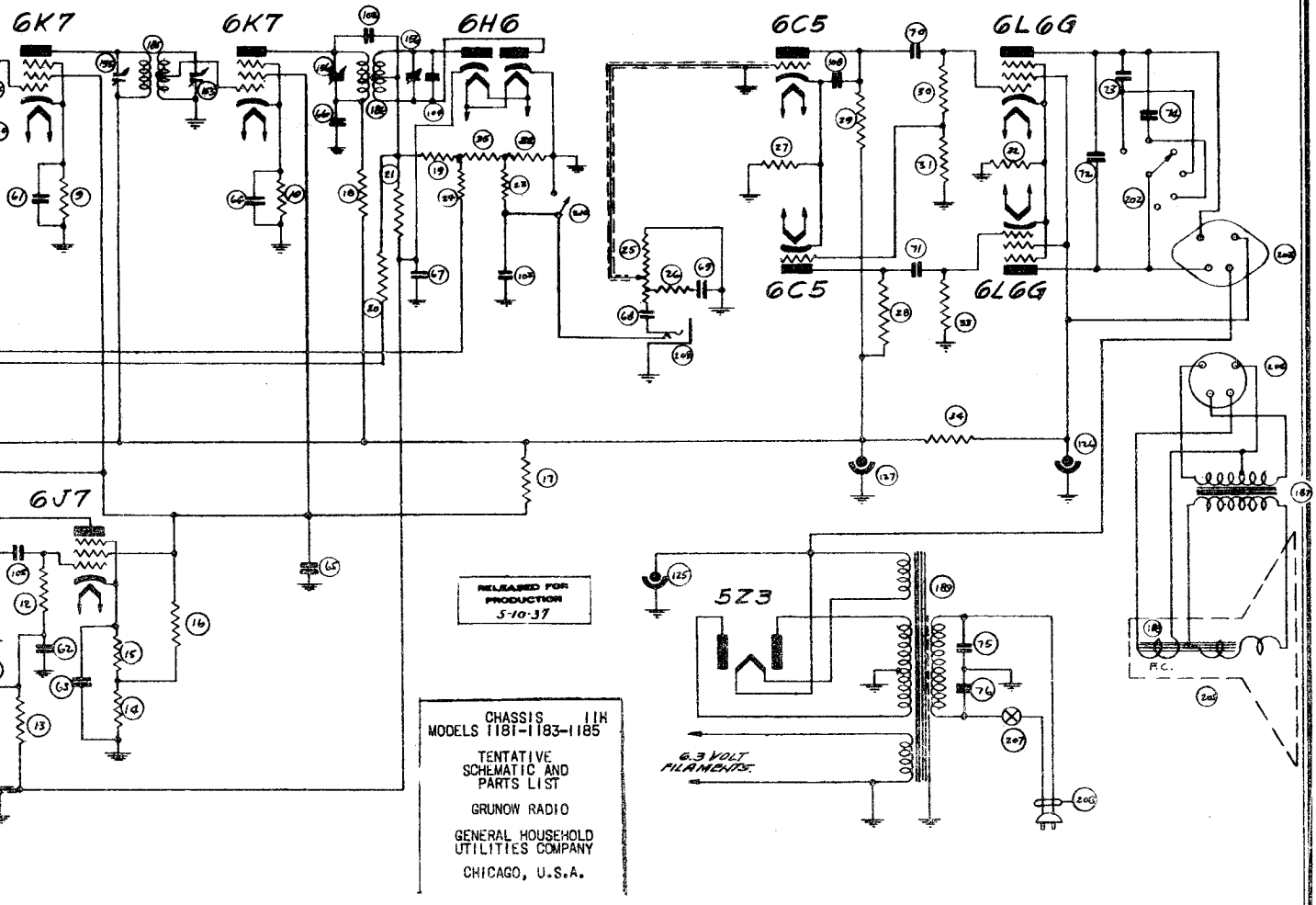

CHASSIS 11K
MODELS 1181-1183-1185

TENTATIVE SCHEMATIC AND PARTS LIST

GRUNOW RADIO

GENERAL HOUSEHOLD UTILITIES COMPANY

CHICAGO, U.S.A.

CONDENSERS

DESCRIPTION	REQ.
450 M.	1
300 M.	1
300 M.	1

ADJUSTABLE CONDENSERS

ITEM	PART NO.	DESCRIPTION	REQ.
150	37990	VARIABLE CONDENSER	1
151	35655	3 GANG TRIMMER COND.	1
152	35654	3 " " "	1
153	35655	3 " " "	1
154	36758	1ST I.F. TRIMMER "	1
155	36758	2ND " " "	1
156	36439	DISCRIM. " "	1
157	36975	1.95 MMF. PADDER	1

TRANSFORMERS & COIL

ITEM	PART NO.	DESCRIPTION	REQ.
175	38874	"F" BAND ANT. COIL	1
175	38276	(LATE) "F" " " "	1
176	38270	"B" " " "	1
176	38271	(LATE) "B" " " "	1
177	38878	"P" " " "	1
177	38275	(LATE) "P" " " "	1
178	38877	"F" " OSC. "	1
179	38273	"B" " " "	1
180	38876	"P" " " "	1
181	38873	"F" " OSC. "	1
182	38274	"B" " " "	1
183	38875	"P" " " "	1
184	38224	1ST I.F. TRANS.	1
185	38225	2ND I.F. TRANS.	1
186	36952	DISCRIMINATOR TRANS.	1
187	36956	OUTPUT TRANS.	1
188	XMR.	FIELD COIL	1
189	38791	POWER TRANS.	1

MISCELLANEOUS

ITEM	PART NO.	DESCRIPTION	REQ.
200	36725	RANGE SWITCH	1
200	38272	(LATE) RANGE SWITCH	1
201	36714	A.F.C.	
202		TONE CONTROL SWITCH	1
201	38582	(LATE) TONE	
202		A.F.C. CONTROL	1
203	35262	SPEAKER SOCKET	1
204	35257	SPEAKER PLUG	1
205	36357	12 & 8-2 SPEAKER	1
206	36316	PILOT LIGHT	2
207	INC. CONT.	LINE SWITCH	1
208	31471	LINE CORD	1
209	36753	PHONOGRAPH JACK	1
210	38129	INTERSTATION SILENCER SWITCH	1
211	TELEDIAL ASSEM.	TELEDIAL SWITCH	1

GILFILLAN BROS.

MODEL 5B8
MODEL 5G8
Schematic, Socket
Parts

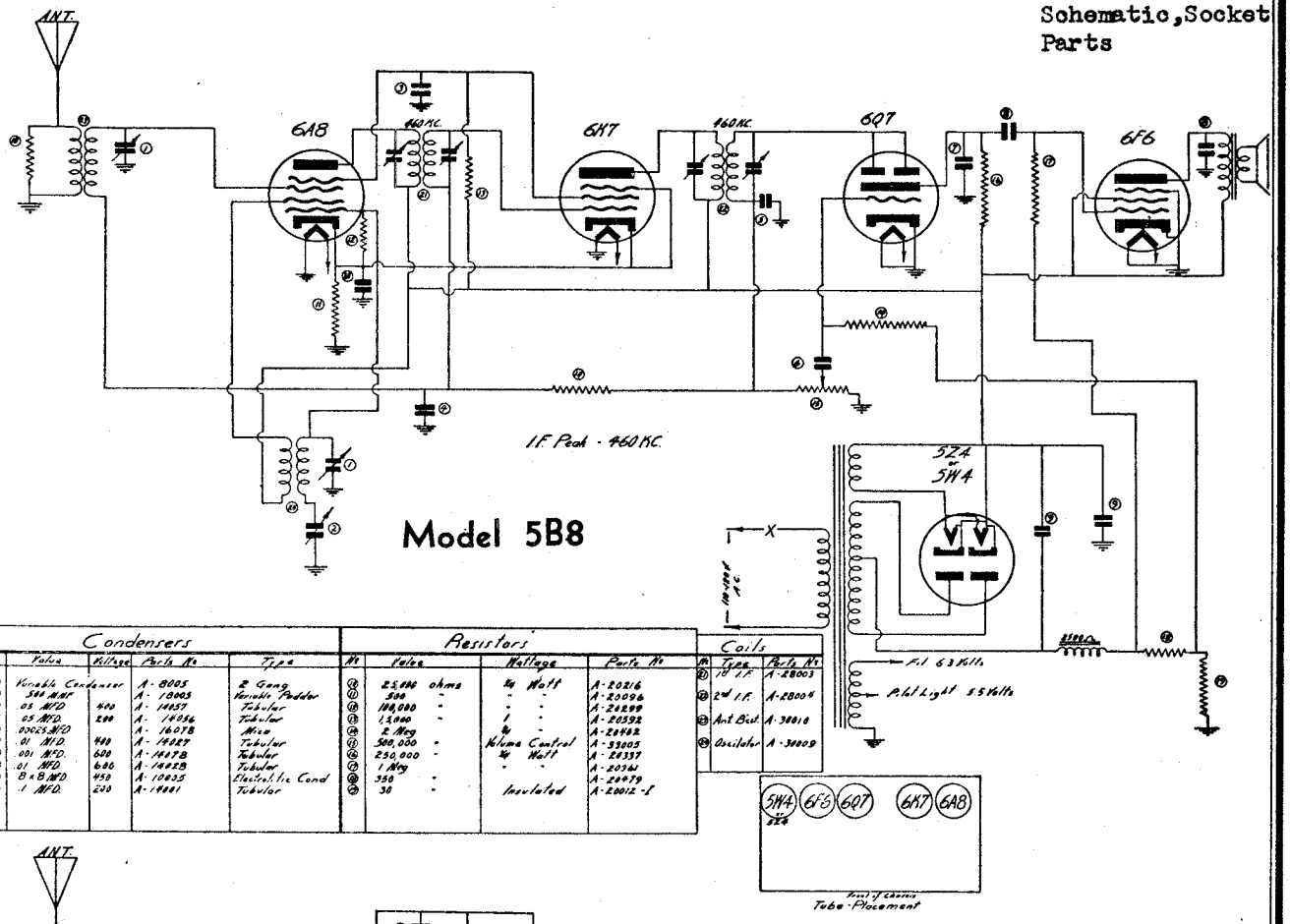

Condensers

No.	Value	Voltage	Parts No.	Type
①	Variable Condenser		A-8005	2 Gang
②	500 MMF		A-19005	Variable Padder
③	.05 MFD.	400	A-19057	Tubular
④	.05 MFD.	200	A-14056	Tubular
⑤	.00025 MFD.		A-16078	Mica
⑥	.01 MFD.	400	A-19027	Tubular
⑦	.001 MFD.	600	A-19078	Tubular
⑧	.01 MFD.	600	A-19029	Tubular
⑨	8 x 8 MFD.	450	A-10035	Electrolytic Cond
⑩	.1 MFD.	200	A-19001	Tubular

Resistors

No.	Value	Wattage	Parts No.
⑪	25,000 ohms	½ Watt	A-20216
⑫	500	- -	A-20096
⑬	100,000	- -	A-24299
⑭	1,500	1 -	A-20392
⑮	2 Meg	½ -	A-24982
⑯	500,000	Volume Control	A-33005
⑰	250,000	½ Watt	A-28337
⑱	1 Meg	- -	A-20341
⑲	350	- -	A-20979
⑳	30	Insulated	A-20012-F

Coils

No.	Type	Parts No.
㉑	1st I.F.	A-28003
㉒	2nd I.F.	A-28004
㉓	Ant. Brd.	A-30010
㉔	Oscillator	A-30009

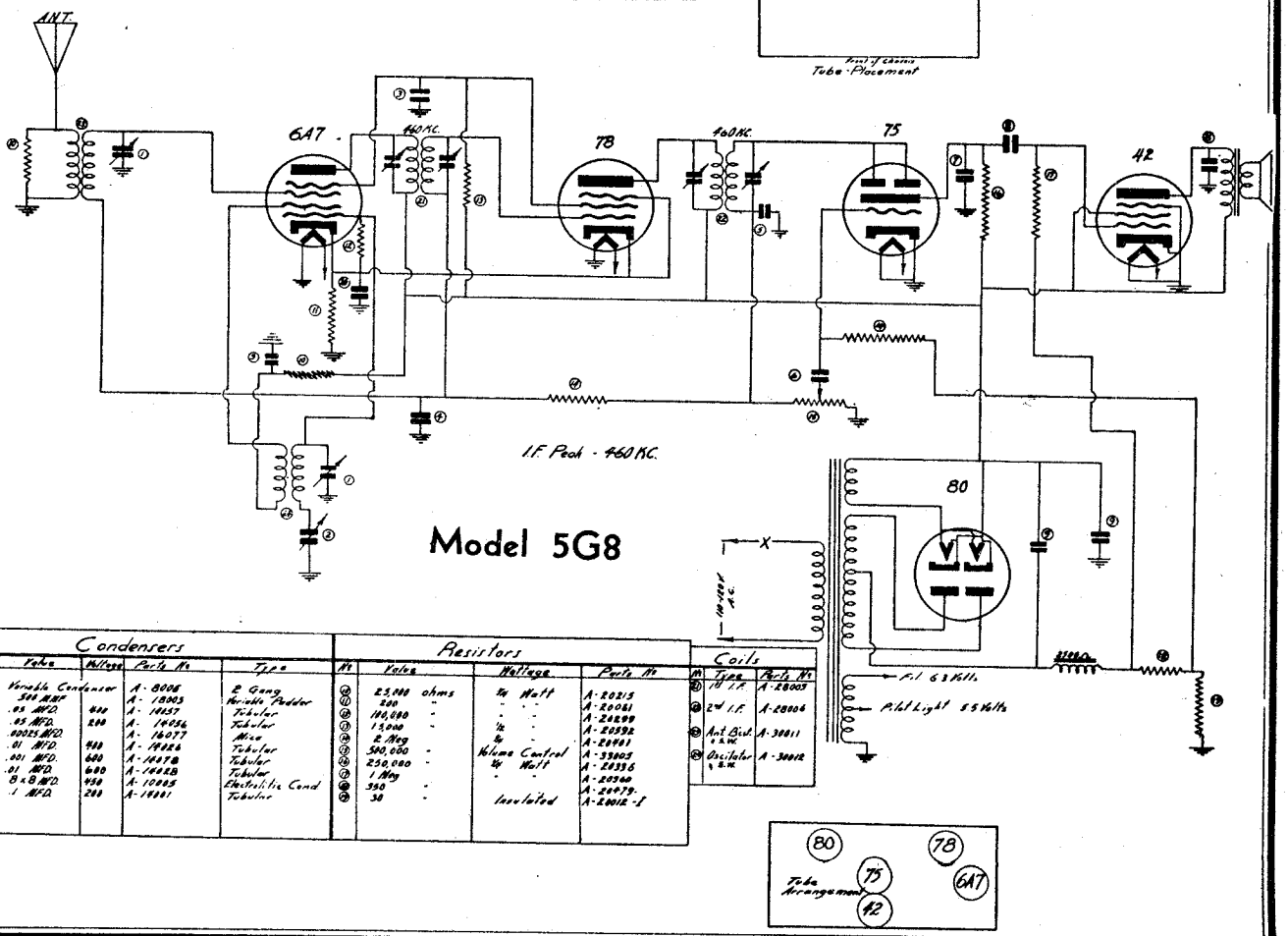

Condensers

No.	Value	Voltage	Parts No.	Type
①	Variable Condenser		A-8006	2 Gang
②	500 MMF		A-19005	Variable Padder
③	.05 MFD.	400	A-19057	Tubular
④	.05 MFD.	200	A-14056	Tubular
⑤	.00025 MFD.		A-16077	Mica
⑥	.01 MFD.	400	A-19026	Tubular
⑦	.001 MFD.	600	A-19078	Tubular
⑧	.01 MFD.	600	A-19028	Tubular
⑨	8 x 8 MFD.	450	A-10035	Electrolytic Cond
⑩	.1 MFD.	200	A-19001	Tubular

Resistors

No.	Value	Wattage	Parts No.
⑪	25,000 ohms	½ Watt	A-20215
⑫	500	- -	A-20061
⑬	100,000	- -	A-24299
⑭	1,500	½ -	A-20392
⑮	2 Meg	½ -	A-24982
⑯	500,000	Volume Control	A-33005
⑰	250,000	½ Watt	A-28336
⑱	1 Meg	- -	A-20340
⑲	350	- -	A-20979
⑳	30	Insulated	A-20012-F

Coils

No.	Type	Parts No.
㉑	1st I.F.	A-28005
㉒	2nd I.F.	A-28006
㉓	Ant. Brd. & R.F.	A-30011
㉔	Oscillator & R.F.	A-30012

©John F. Rider, Publisher

MODEL 5S8
MODEL 6X8

GILFILLAN BROS.

Schematic, Socket Parts

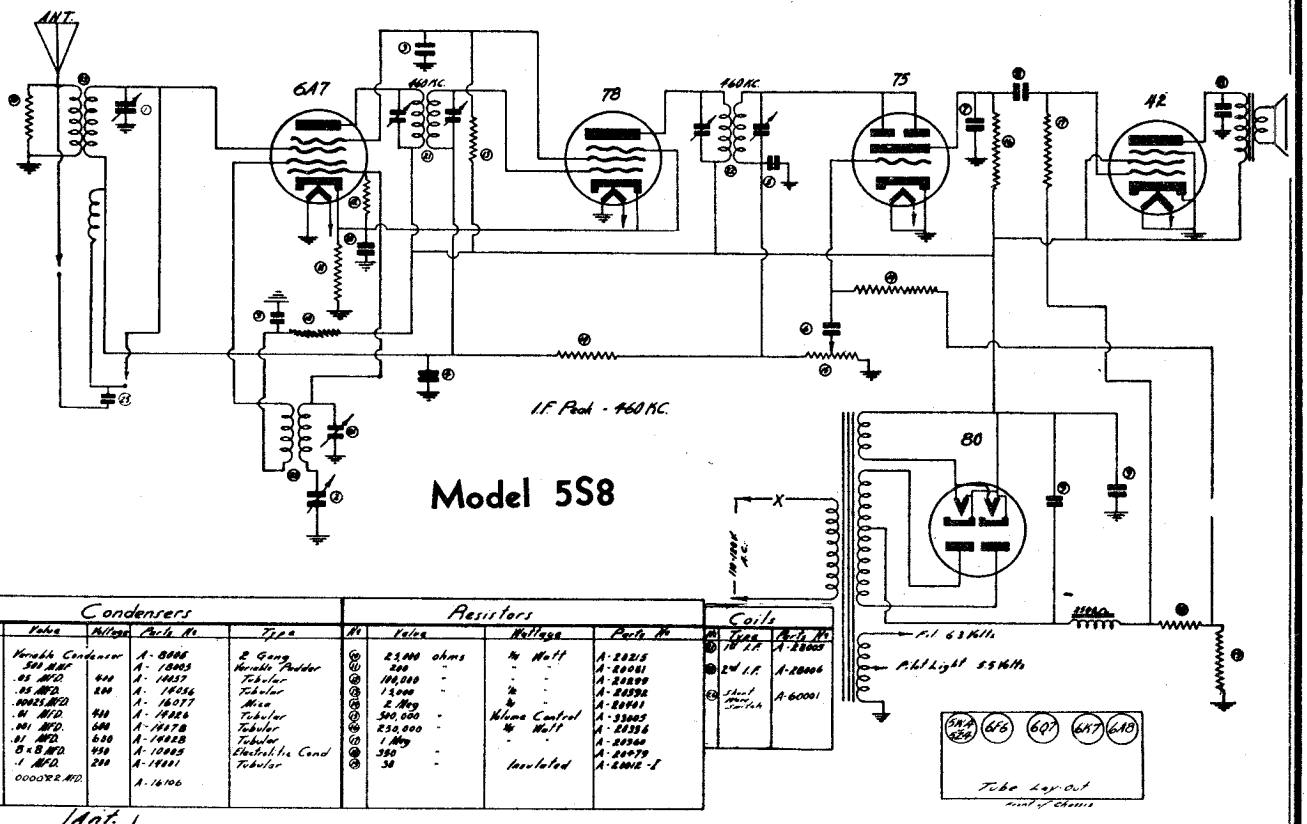

Condensers				
No.	Value	Voltage	Parts No.	Type
1	Variable Condenser		A-8006	2 Gang
2	500 MMF		A-18005	Variable Padder
3	.05 MFD.	400	A-14057	Tubular
4	.05 MFD.	200	A-14056	Tubular
5	.00025 MFD.		A-16077	Mica
6	.01 MFD.	400	A-14026	Tubular
7	.001 MFD.	600	A-14078	Tubular
8	.01 MFD.	600	A-14028	Tubular
9	8×8 MFD.	450	A-10005	Electrolytic Cond
10	.1 MFD.	200	A-14001	Tubular
11	.000022 MFD.		A-16106	

Resistors			
No.	Value	Wattage	Parts No.
10	25,000 ohms	1/4 Watt	A-20215
11	200 "	" "	A-20081
12	100,000 "	" "	A-20299
13	15,000 "	1/2 "	A-20592
14	2 Meg	1/4 "	A-20401
15	500,000 "	Volume Control	A-33005
16	250,000 "	1/4 Watt	A-20396
17	1 Meg	" "	A-20360
18	350 "		A-20479
19	30 "	Insulated	A-20012-I

Coils		
No.	Type	Parts No.
20	1st I.F.	A-28005
21	2nd I.F.	A-28006
22	Short Wave Switch	A-60001

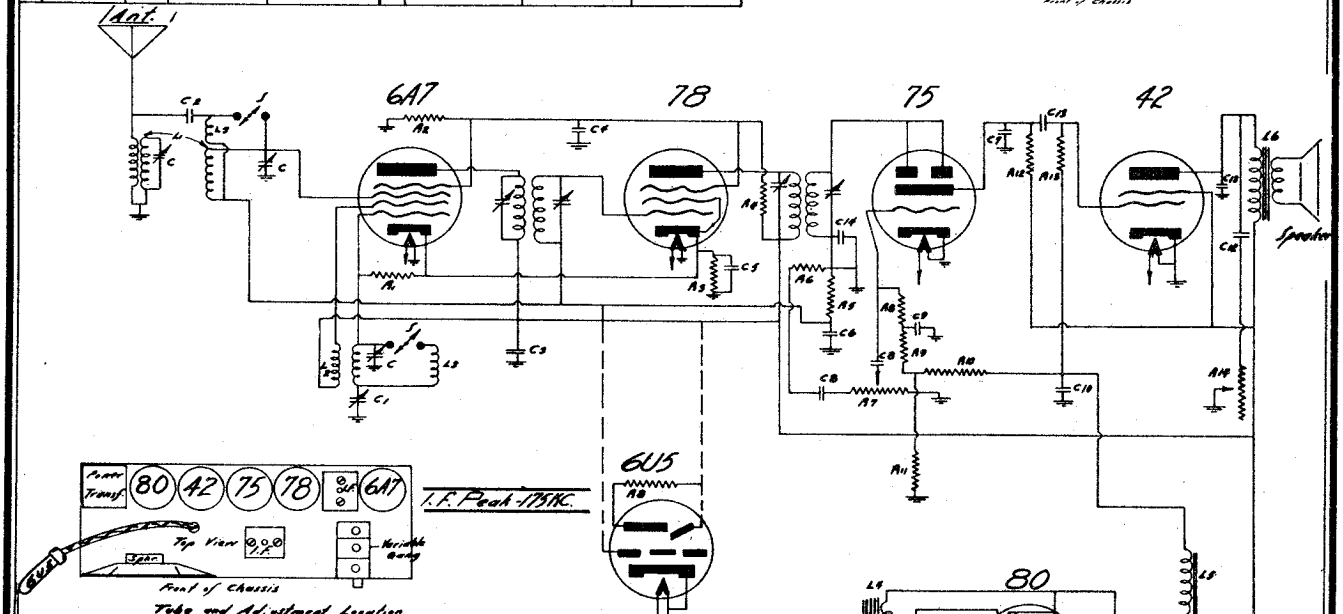

CONDENSERS			
Code	Value	Voltage	Type
C	Variable	Condenser	3 Gang
C1	1000 MFD.		Mica
C2	.000022 "		"
C3	.25 "	400	Tubular
C4	.1 "	"	"
C5	.25 "	200	"
C6	.05 "	400	"
C7	.0001 "		
C8	.01 "	400	Tubular
C9	.1 "	200	"
C10	10 "	35	"
C11	8 "	450	Electrolytic (Filter)
C12	.03 "	800	Tubular
C13	.01 "	600	"
C14	.00025 "		"

RESISTORS				
Code	Value	Ohms	Watts	Type
R1	100,000	Ω	1/4	
R2	50,000	"	1/2	
R3	300	"	1/4	
R4	40,000	"	1	
R5	2 Meg	"		
R6	250,000	"	1/4	
R7	500,000	Variable Volume Control		
R8	1 Meg	Ω		(1 in tube socket of 6U5)
R9	100,000	"	1/2	
R10	350	"	1/4	
R11	30	"	"	
R12	200,000	"	"	
R13	500,000	"	"	
R14	50,000	Variable Tone Control.		

Misc.	
L1	Broadcast Ant. Band pass coil.
L2	Best Osc Coil.
L3	Short wave coil.
L4	Power Transf.
L5	Speaker field
L6	Voice Coil
S	75 Switch S.W.

Gilfillan Bros. Inc.

Model 6X8
1937-38

©John F. Rider, Publisher

GILFILLAN BROS.

MODEL 7T8
Schematic, Socket
Trimmers

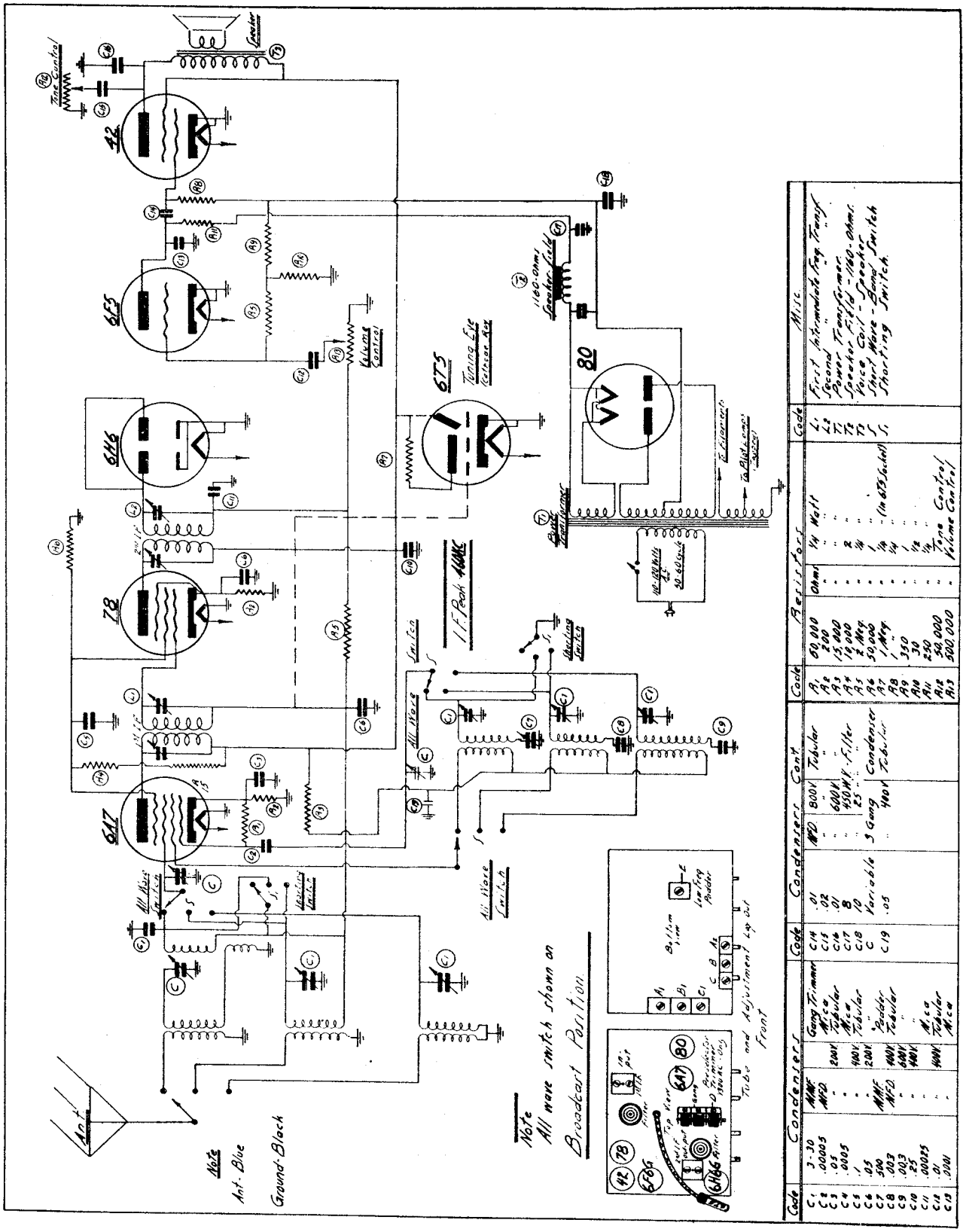

Code	Condensers			Code	Condensers Cont		Code	Resistors		Code	Misc.
C1	3-30	MMF	Gang Trimmer	C14	.01	MFD 600V Tubular	R1	80,000	Ohms	L1	First Intermediate Freq. Transf.
C2	.00005	MFD	Mica	C15	.02	" "	R2	200	"	L2	Second " "
C3	.05	200V	Tubular	C16	.01	" "	R3	15,000	"	L3	Power Transformer
C4	.0005	"	Mica	C17	8	450V Mfd. Filter	R4	10,000	"	T1	Speaker Field - 1150 Ohms
C5	.1	"	Tubular	C18	10	25 " "	R5	2	Meg.	T2	Voice Coil - Speaker
C6	.05	200V	"	C	Variable	3 Gang Condenser	R6	50,000	"	T3	Short Wave - Gang Switch
C7	500	MMF	Padder	C19	.05	400V Tubular	R7	1	Meg.	T4	Shorting Switch.
C8	.003	MFD	Tubular				R8	350	"		
C9	.003	400V	"				R9	30	"		
C10	.25	400V	"				R10	250,000	"		
C11	.00025	"	Mica				R11	500,000	"		
C12	.01	"	Tubular				R12				
C13	.2001	"	"				R13				

©John F. Rider, Publisher

MODELS 8T8,8C8
Schematic,Socket
Trimmers

GILFILLAN BROS.

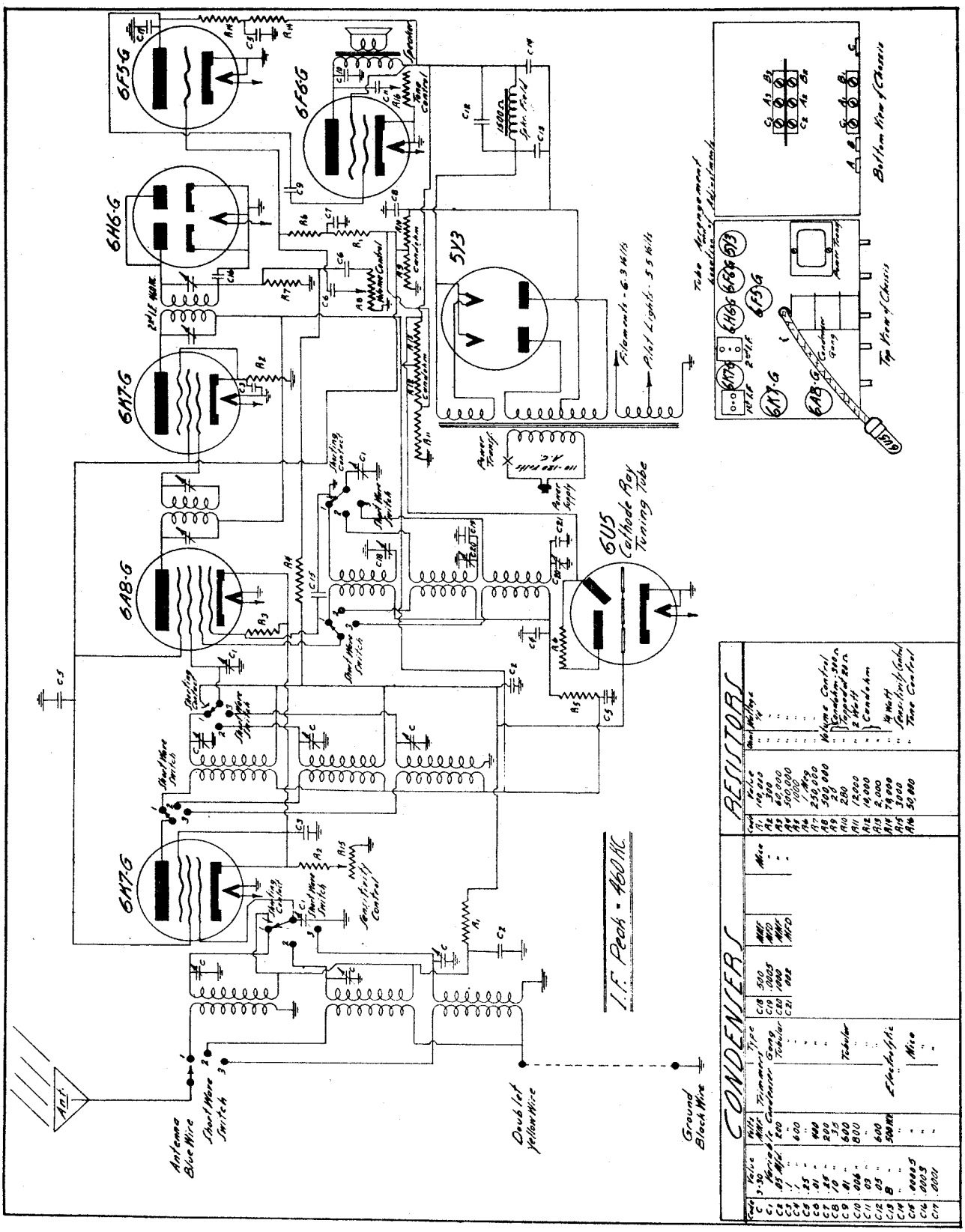

©John F. Rider, Publisher

GILFILLAN BROS.

MODELS 8T8E, 8C8E
Schematic, Socket
Trimmers

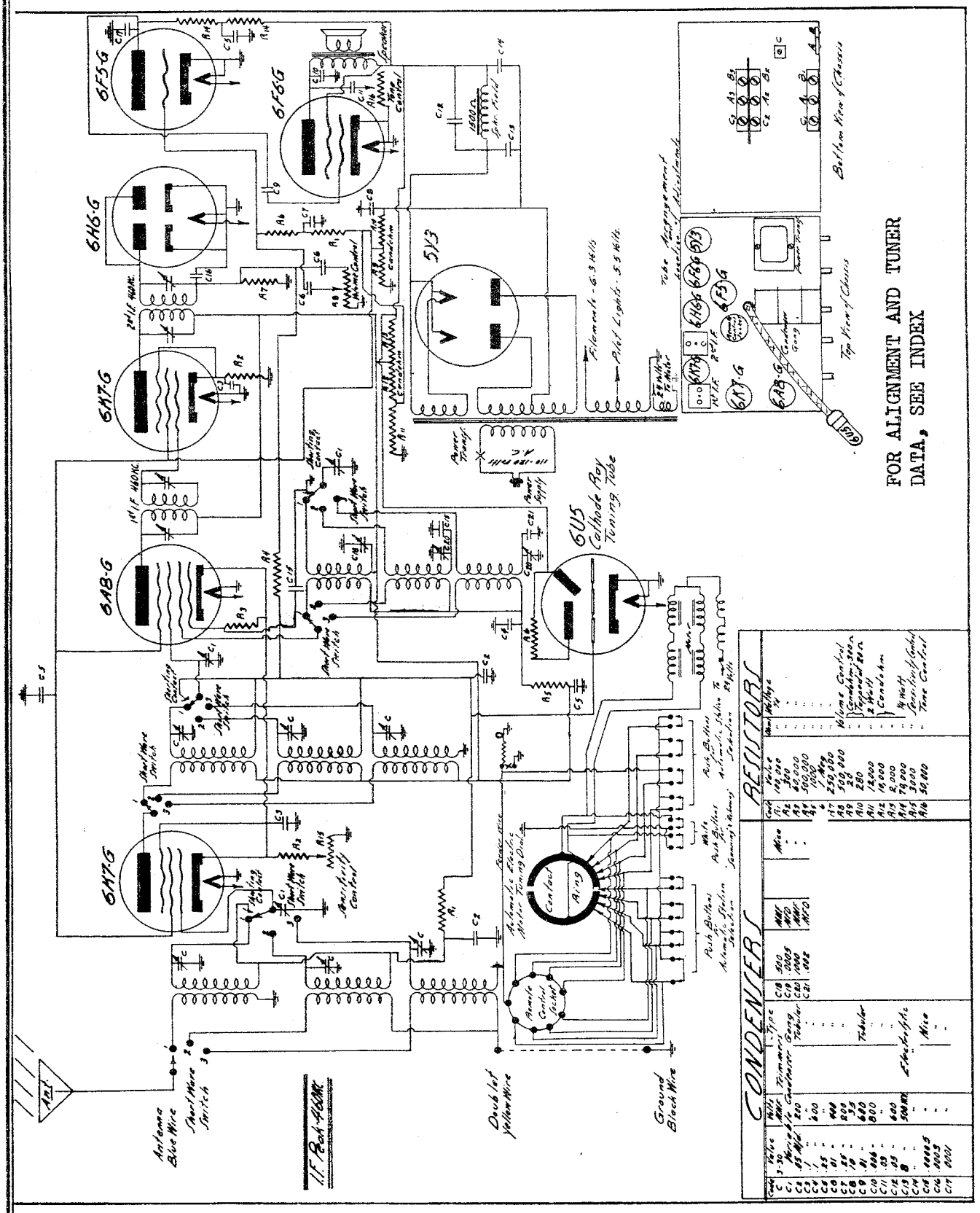

©John F. Rider, Publisher

MODELS 8T8E 8C8E AND 13C8-E

ALIGNMENT AND CALIBRATION

This Radio was properly aligned at the factory with precision instruments and realignment should not be attempted unless all other possible causes of the faulty operation have first been investigated and unless the service technician has the proper equipment.

A signal generator that will provide an accurately calibrated signal at 460, 1715, 1300, 600, 5400, 9000, 14400, 16200, 17400 and 18000 K.C. and an output indicating meter or V.T. volt meter are required. It will be practically impossible to align the receiver if unsatisfactory apperatus is used.

Use a non-metaillic screwdriver for the adjustments. The complete procedure is as follows:

I. F. AMPLIFIER ADJUSTMENT

Adjust signal generator to give proper output at 460 K.C. Connect the output of the signal generator to the antenna of the receiver.

Connect the ground lead of the receiver to the ground post of the signal generator.

Turn the band switch to Range A. position (Standard wave band). Connect the vacuum tube volt meter to the A.V.C. buss of the receiver and adjust trimmers in the I.F. stage to resonance. During this procedure short out the front or oscillator section of the variable tuning condenser. Broad and sharp switch should be turned to extreme left position—sharp—for all alignments.

RANGE A ALIGNMENT - 525 to 1750 K.C.

Turn the rotor of the tuning condenser to full maximum position. Set both ends of pointer to true horizontal line.

1. Turn pointer to 1712 K.C. and set signal generator output to 1712 K.C. and adjust oscillator high frequency trimmer "A1" for maximum output.

2. Turn pointer to 600 K.C. and adjust signal generator to 600 K.C. output.
Then use low frequency trimmer "A" and adjust for maximum output.

3. Turn pointer to 1300 K.C. and set signal generator output to 1300 K.C. and adjust modulator high frequency trimmer "A2" and "A3" radio frequency stage for maximum output.

Then turn pointer to 600 K.C. and readjust trimmer "A" but do not adjust "A2" and "A3" at this point.

RANGE B ALIGNMENT - 1700 to 5800 K.C.

1. Turn pointer to 5400 and set signal generator at 5400 K.C. and adjust high frequency trimmer "B1" to resonance of 5400 K.C. on the dial.

2. Turn pointer to 1800 K.C. and adjust signal generator to 1800 K.C. output. Then use low frequency trimmer B.

3. Then repeat No. 1 operation and also adjust "B2" and "B3."

RANGE C ALIGNMENT - 18000 to 5400 K.C.

1. Turn pointer to 18 Meg. and set signal generator at 18 Meg. and adjust high frequency trimmer "C1" to resonance at 18 Meg. on dial. Then adjust trimmer "C2" and "C3" for maximum output.

2. Turn pointer to 6000 K.C. and set signal generator at 6000 K.C. and adjust low frequency trimmer "C" for maximum output.

CAUTION

During this procedure it is very easy to set the oscillator high frequency trimmer on the image side of signal which will give incorrect alignment. The oscillator trimmers are always tuned to a frequency that is higher than that of the true signal that the receiver is receiving.

NOTE—In the event this receiver does not operate properly—consult your **Dealer or Serviceman.**

Diagram No. 2

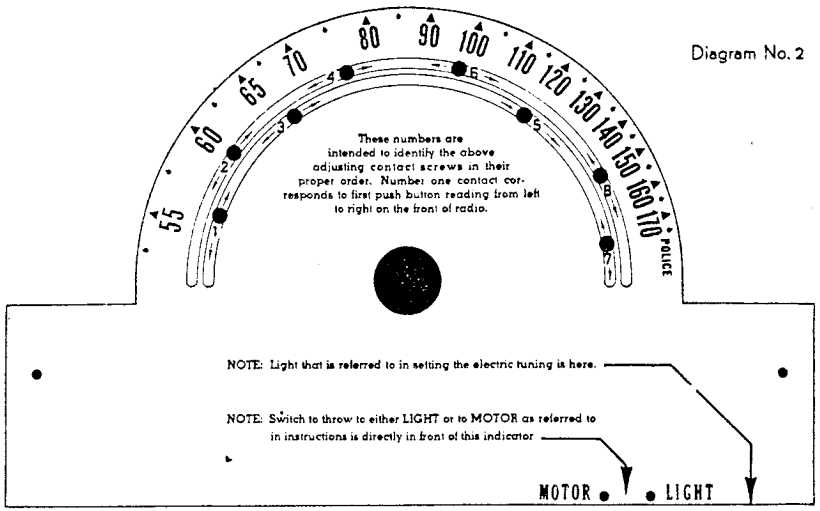

STEPS FOR SETTING ELECTRIC TUNING OF GILFILLAN ELECTRIC TUNING RADIO

Select eight most desired stations in your locality. Arrange in order kilocycles, i.e. station operating on lowest K.C. first, next lowest second, and so on.

Refer to diagram No. 1 showing numbering of buttons. Assign station with lowest K.C. to button No. 1, next lowest to button No. 2, and so on. From chart of stations furnished, cut out index card for stations selected and insert in slot directly above buttons.

To set selector buttons to tune desired stations:

1. Turn Number 1 knob to extreme left.
2. Hand tune the station desired to be selected by selector button.
3. Push in the selector button for which you are setting station.
4. At rear of chassis throw toggle switch to "light" (see diagram No. 2).
5. Loosen slightly the adjusting contact screw of number to correspond with button being set.
   Move adjusting contact screw to right or to left until light (see diagram No. 2) goes out, then tighten adjusting contact screw.
6. Throw switch to "motor."
7. By hand turn pointer away from station that has been selected.
8. Turn Number 1 knob to extreme right (motor tuning) position and station indicator should turn automatically back to station you have just set.

For each station you wish to set, follow this same series of steps.

The motor that operates the automatic feature of the dial is thermostatically controlled. After ten minutes of constant operation the motor will autometically cut "off."—Do not get alarmed or call your service man.—This is merely a protective feature and as soon as the motor cools to operating temperature the motor will cut "on" again.

REMOTE CONTROL

If Remote Control is purchased for this radio, merely insert plug into plug socket immediately in rear of condenser gang. Cut out station index cards from chart and insert in slots directly above buttons so that stations indicated on remote control buttons correspond to buttons on receiver.

To use Remote Control, all buttons on receiver must be released. This is done by pushing in either "scan" button on the set. Before buttons on receiver can be used after using Remote Control, Remote buttons must be released by pushing in "Release" button.

©John F. Rider, Publisher

GILFILLAN BROS.

MODEL 13C8E
Schematic, Socket
Trimmers

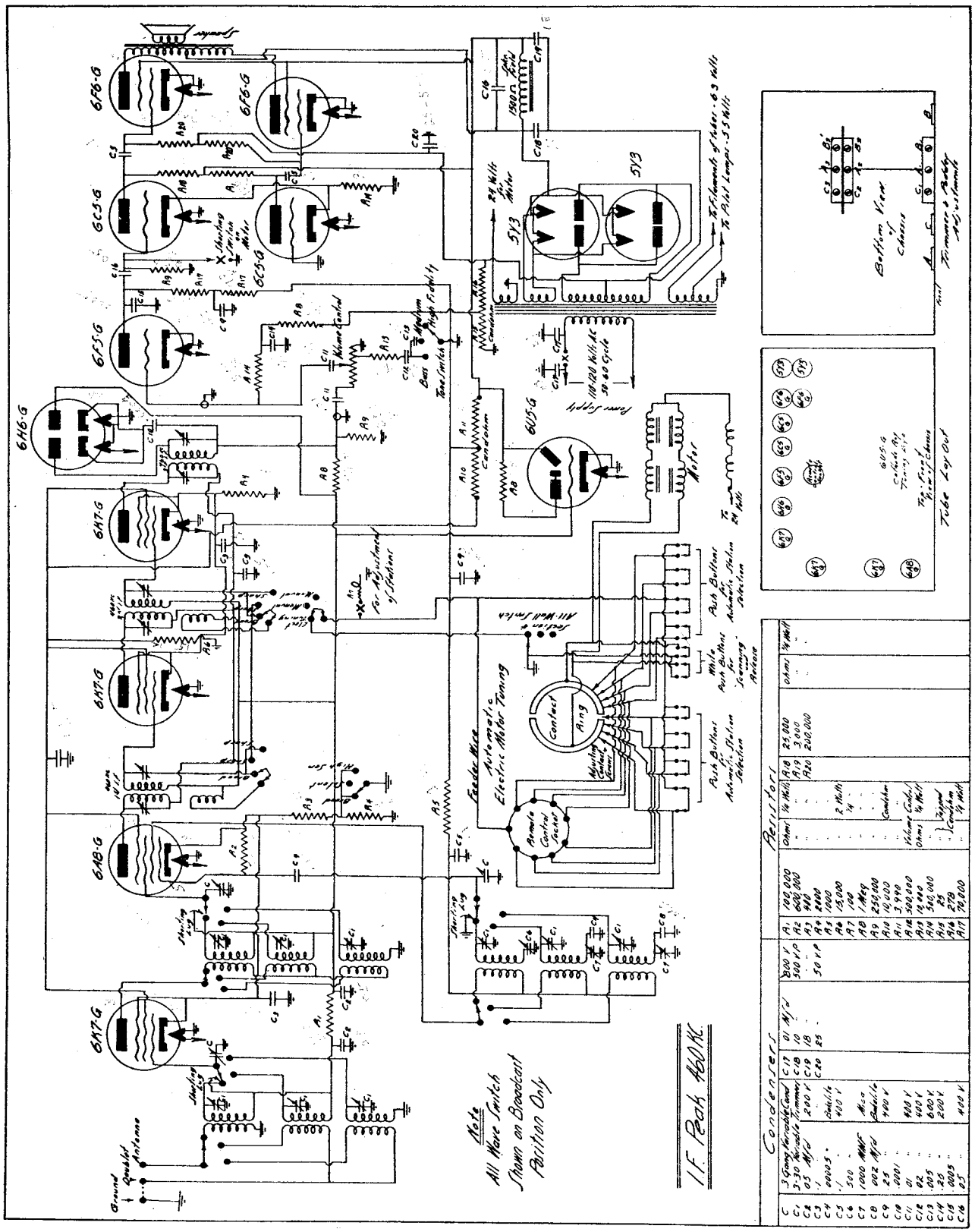

Condensers

C1	.5 Gang Variable	C17	.01 Mfd
C2	.5 Mfd	C18	.1 "
C3	.1 "	C19	.25 "
C4	.0005 "		
C5	.1 "		
C6	500 "		
C7	1000 MMF		
C8	.002 Mfd		
C9	.25 "		
C10	.001 "		
C11	.01 "		
C12	.02 "		
C13	.05 "		
C14	.25 "		
C15	.005 "		
C16	.25 "		

Resistors

R1	100,000	R9	25,000
R2	400,000	R19	3,000
R3	2,000	R20	200,000
R4	1000		
R5	15,000		
R6	100		
R7	1MEG		
R8	250,000		
R10	10,000		
R11	3,990		
R12	320,000		
R13	10,000		
R14	340,000		
R15	25		
R16	270		
R17	70,000		

FOR ALIGNMENT AND TUNER DATA, SEE INDEX

©John F. Rider, Publisher

MODEL 501-T
Schematic

GILFILLAN BROS.

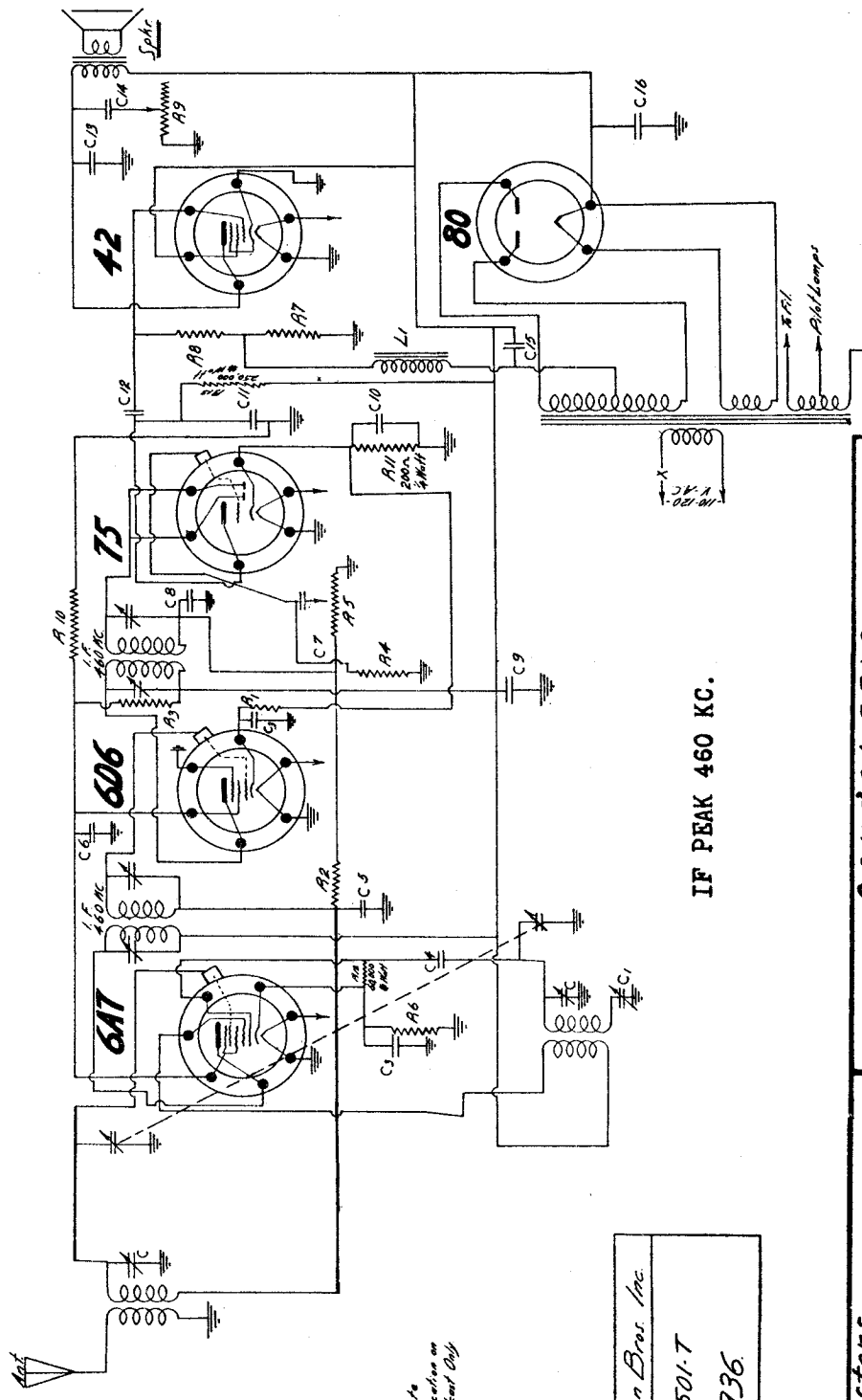

Resistors

R1	200 Ohms - 1 Watt - Wire wound - 10%
R2	1 Meg - ½ " - Carbon "
R3	250,000 Ohms - 1 " - " "
R4	500,000 " - ½ " - " "
R5	500,000 " - Volume Control
R6	500 " - ½ Watt - Carbon "
R7	300 " - 1 " - " "
R8	500,000 " - ½ " - " "
R9	50,000 " - Tone Control
R10	100,000 " - ½ Watt - Carbon "

Condensers

C	3-30 MMFD Single Plate Trimmer	
C1	500 " Variable Padder	
C2	.003 MFD Mica 10%	
C3	.05 - 200 Volts	
C4	.00005 MMFD Bakelite Type 10%	
C5	.05 MFD 200 Volts	
C6	1 " " "	
C7	.01 " " "	
C8	.00025 MFD Bakelite Type 10%	
C9	1 MFD - 200 Volts	
C10	10 " - 35 " Electrolytic	
C11	.00025 MFD Bakelite Type 10%	
C12	.02 MFD - 400 Volts	
C13	.006 " - 800 "	
C14	.02 " - 600 "	
C15	5 " " " - Filter	
C16	" " " "	

©John F. Rider, Publisher

GOODYEAR SERVICE

MODEL 585
Series A,B,C
Schematics, Voltage

SERIES A

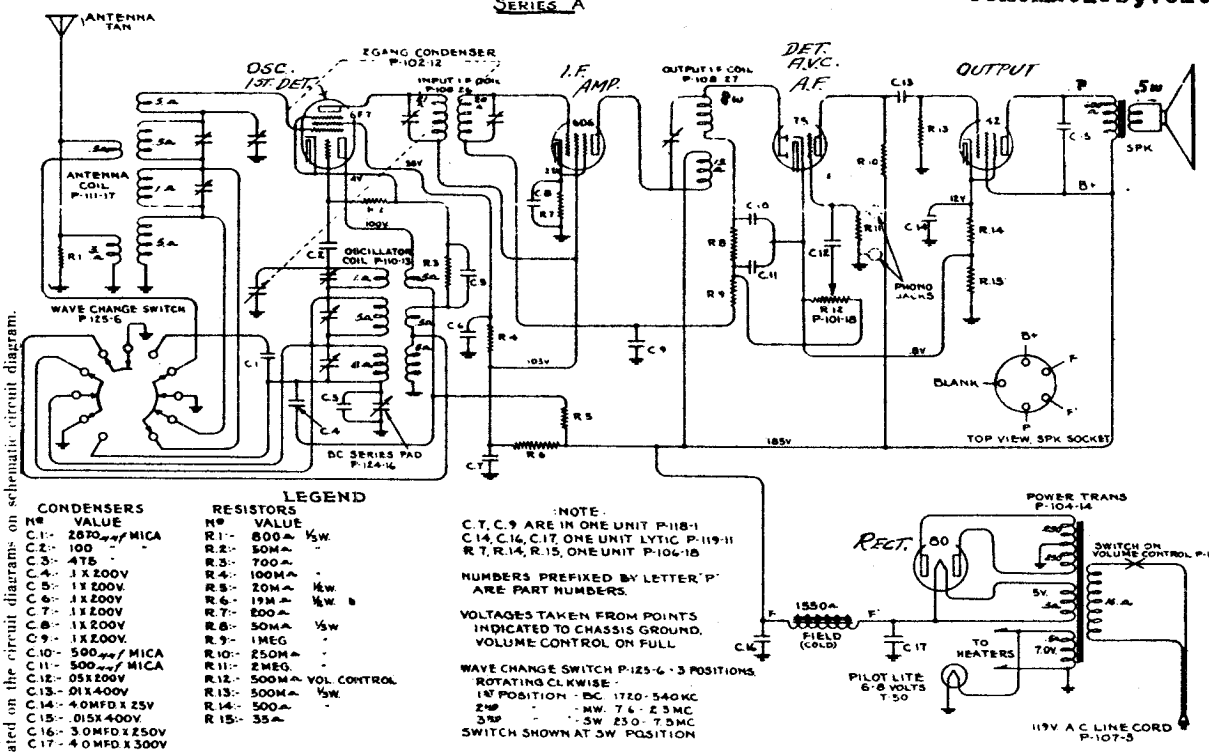

LEGEND

CONDENSERS No	VALUE
C.1	2870 mmf MICA
C.2	100 " "
C.3	475 "
C.4	.1 X 200V
C.5	.1 X 200V.
C.6	.1 X 200V
C.7	.1 X 200V
C.8	.1 X 200V
C.9	.1 X 200V.
C.10	500 mmf MICA
C.11	500 mmf MICA
C.12	.05 X 200V
C.13	.01 X 400V
C.14	4.0 MFD. X 25V
C.15	.015 X 400V.
C.16	3.0 MFD X 250V
C.17	4.0 MFD. X 300V

RESISTORS No	VALUE
R.1	800Ω ½W.
R.2	50MΩ "
R.3	700Ω "
R.4	100MΩ "
R.5	20MΩ ½W.
R.6	1 MΩ ½W.
R.7	200Ω "
R.8	50MΩ ½W
R.9	1 MEG "
R.10	250MΩ "
R.11	2 MEG. "
R.12	500MΩ VOL. CONTROL
R.13	500MΩ ½W.
R.14	500Ω "
R.15	35Ω "

NOTE
C.T, C.9 ARE IN ONE UNIT P-118-1
C.14, C.16, C.17, ONE UNIT LYTIC P-119-11
R.T, R.14, R.15, ONE UNIT P-106-18

NUMBERS PREFIXED BY LETTER "P" ARE PART NUMBERS.

VOLTAGES TAKEN FROM POINTS INDICATED TO CHASSIS GROUND. VOLUME CONTROL ON FULL

WAVE CHANGE SWITCH P-125-6 - 3 POSITIONS. ROTATING CLKWISE -
1ST POSITION - BC. 1720 - 540 KC.
2ND " - MW. 7.6 - 2.3 MC.
3RD " - SW. 23.0 - 7.5 MC.
SWITCH SHOWN AT SW. POSITION

Voltages taken from different points of circuit to chassis are meas... tuned with volume control full on, all tubes in their sockets and ... speaker connected, with a volt meter having a re-sistance of 1000 ohms per volt. These voltages are clearly indicated on the circuit diagrams of series "A", "B", and "C".

All voltages are measured with 119 volts on the primary of the power transformer. Resistance of coils and transformer windings are indicated in ohms on schematic circuit diagram.

Series "B" and "C" may be identified by the letter "B" and "C" at the end of the serial numbers.

TUNING RANGE—SERIES A:
Standard Broadcast Band
540 - 1720 Kilocycles
Intermediate Band
2.3 - 7.6 Megacycles
Short Wave Band
7.5 - 23.0 Megacycles

TUNING RANGE—SERIES B & C:
Standard Broadcast Band
530 - 1720 Kilocycles
Intermediate Band
2.35 - 7.7 Megacycles
Short Wave Band
7.6 - 19.0 Megacycles

I. F. FREQUENCY:
Series A, Series B } 370 K.C.
Series C 465 K.C.

Series B&C

SERIAL NUMBERS
SERIES B 5A1005108 UP
SERIES C 5B1056356 UP

NOTE
SERIES B
.0870 mmf - C1 -
330 mmf - C5 -
P-103-9 - WAVE TRAP - P-105-10
P-111-18 - ANT COIL - P-111-27
P-110-14 - OSC COIL - P-110-22
P-108-26 - INPUT I.F. - P-108-38
P-108-25 - OUTPUT I.F. - P-108-40
SERIES C
9000 mmf
380 mmf

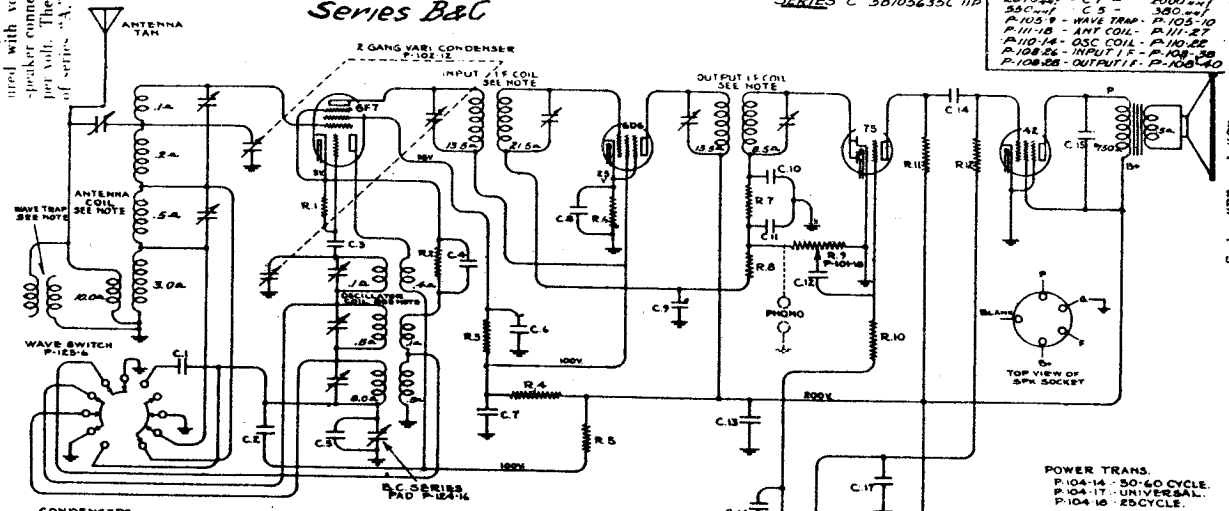

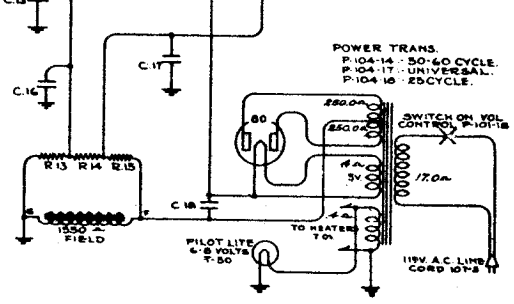

CONDENSERS No	VALUE
C1	SEE NOTE
C2	.1 X 200V
C3	100 mmf MICA
C4	.1 X 200V.
C5	SEE NOTE
C6	.1 X 200V
C7	.1 X 200V
C8	.1 X 200V
C9	.1 X 200V.
C10	100 mmf MICA
C11	100 mmf MICA
C12	.05 X 200V.
C13	8.0 MFD. X 300V P-103-7
C14	.01 X 400V
C16	.1 X 200V.
C17	.1 X 200V
C18	8.0 MFD. X 350V. P-103-6
C15	.015 X 600V

RESISTORS No	VALUE
R1	80Ω ½W.
R2	700 "
R3	100M "
R4	25M ½W
R5	20M "
R6	250 ½W
R7	50M "
R8	500M "
R9	500M VOL CONT'L
R10	1 MEG. ½W
R11	250M "
R12	" "
R13	15M "
R14	150M "
R15	800M "

C-6, C-8 IN DUAL UNIT P-118-1
C.T, C.9 " " " "
C.14, C.17 " " " "

NUMBERS PREFIXED BY LETTER "P" ARE PART NUMBERS.

VOLTAGES TAKEN FROM POINTS INDICATED TO CHASSIS GROUND VOLUME CONTROL ON FULL

WAVE SWITCH P-125-6, 3 POSITIONS ROTATING CLKWISE -
1ST POSITION - BC. 1720 - 550 KC.
2ND " - MW. 7.7 - 2.35 MC.
3RD " - SW. 19.0 - 7.6 MC.
SWITCH SHOWN AT SW. POSITION

Series "B" and "C" chassis are serially numbered on the back flange of the chassis, series "B" beginning with number "5A1005108" and up; series "C" chassis, beginning with number "5B1056356C", differs only from series "B" in that the I.F. frequency was changed from 370 to 465 kilocycles.

Series "A" chassis are equipped with dry electrolytic filter condensers and are serially numbered on paper tags which are attached to the line cord and to the inside of the cabinet.

Transformers are available and chassis are sometimes equipped with universal transformers for operation on 40 and 60 cycles and with primary taps for 108, 125, 150, 220 and 250 volts (see illustrations) and also sometimes equipped with 25 cycle transformers with 105-115 volt or 220 volt primaries, not universals.

©John F. Rider, Publisher

MODEL 585
Series A,B,C
Socket, Trimmers
Alignment

GOODYEAR SERVICE

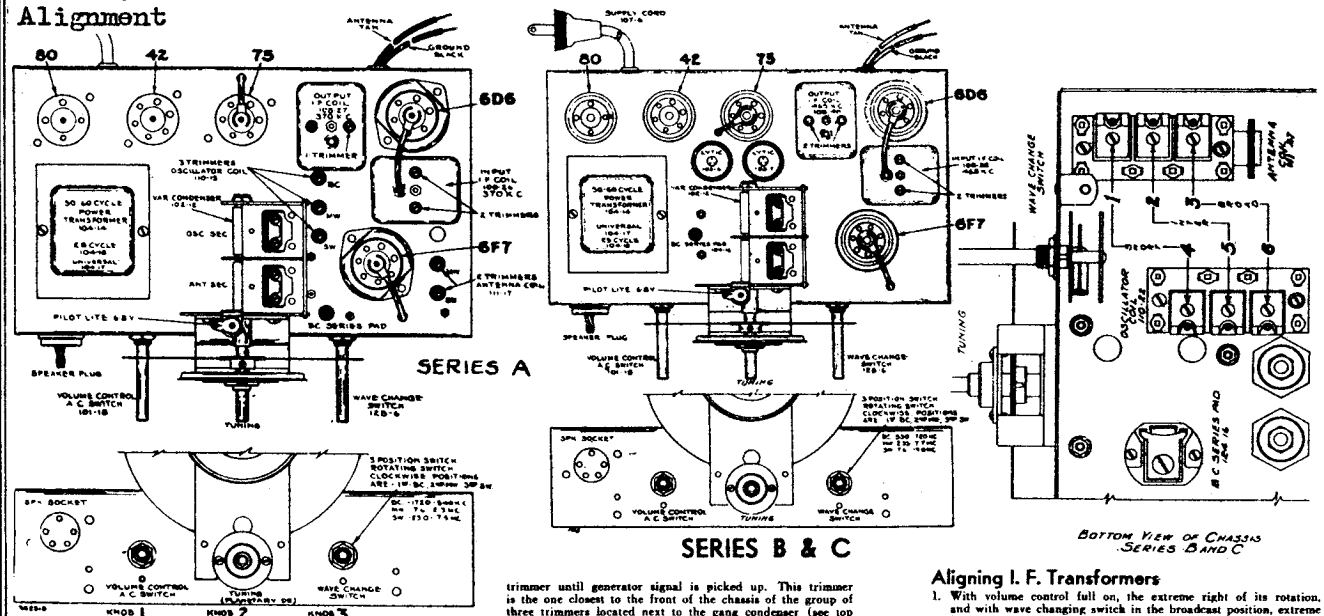

ALIGNING INSTRUCTIONS—SERIES A

Description of various dummy antennas used and referred to in these instructions:

(1) I.F. Dummy—Consists of a .1 mfd. condenser connected in series with the external oscillator.

(2) Broadcast Dummy—Consists of a 200 mmfd. condenser and a 20 ohm resistor connected in series with each other and in series with the external oscillator.

(3) Intermediate and Short Wave Dummy—Consists of a .1 mfd. condenser and a 400 ohm resistor connected in series with each other and in series with the external oscillator.

Resonance Indicator:

Use as a resonance indicator an output meter connected across the primary of the speaker input transformer, or by means of an adapter between the plate and screen terminals of the type 42 output tube. Maximum deflection of the meter indicates resonance. Use only enough signal to get a readily readable output. A low range output meter or the low scale of a multi-range volt meter should be used.

SERIES A

Alignment

No aligning adjustments should be attempted without first thoroughly checking over all other possible causes of trouble, such as poor installations, open or grounded antenna systems, low line voltages, defective tubes, condensers and resistors. In order to properly align this chassis, an oscillator (generator) is absolutely necessary. No aligning adjustments should be attempted with the chassis in the cabinet. To remove the knobs, pull them off and to take the chassis out of the cabinet, remove the three bolts by which it is fastened and the speaker plug which you will find on the front flange of the chassis.

Aligning I. F. Transformers

1. With volume control full on, the extreme right of its rotation, and with wave changing switch in the broadcast position, extreme left of its rotation, and with variable condenser at its minimum capacity position, plates, entirely out of mesh, adjust the I.F. transformers (adjustments at the top of parts number 108-26 and 108-27—see top view).
   (a) Connect external oscillator in series with I.F. dummy antenna. With external oscillator adjusted to 370 kilocycles, in series with I.F. dummy antenna to the control grid cap of the type 6D6 tube and chassis ground, adjust output I.F. transformer, part number 108-27, to resonance.

Note: Output I.F. transformer, part number 108-27, has only one adjustment.

   (b) Move generator output clip from grid of 6D6 to grid cap of type 6F7 tube and align input I.F. transformer, part number 108-26, to resonance. NOTE: IT IS EXTREMELY NECESSARY TO ALIGN BOTH I.F. STAGES SEPARATELY.

Broadcast Band Alignment—
(540 - 1720 Kilocycles)

1. With wave changing switch in the broadcast position, extreme left of its rotation, and with gang condenser in its minimum capacity position, plates entirely out of mesh, and with external oscillator connected in series with broadcast dummy antenna to tan antenna lead and black ground lead, make the following adjustments:
   (a) Set external oscillator to 1720 kilocycles and adjust oscillator trimmer to resonance. This adjustment is the rear adjustment of a group of three located next to the variable condenser.
   (b) Readjust external oscillator to 600 kilocycles and adjust broadcast series pad to resonance by rotating condenser to approximately 600 kilocycles, rocking it slowly to and fro until by adjusting pad maximum output is attained. This adjustment is located at the front of the chassis next to the variable condenser and wave changing switch.
   (c) Check for tracking and sensitivity at 1400 and 1000 kilocycles. NOTE: It is extremely necessary in making all of the above adjustments that the fundamental signal of the oscillator be tuned in and not the image frequency, which will fall below the fundamental.

Short Wave Band Alignment—
(7.5 - 23.0 Megacycles)

1. This band is aligned after the I.F. adjustments have been completed. Set wave selector switch in the short wave position, extreme right of its rotation, set pointer of dial to 21 megacycles.
   (a) With external oscillator set at 21 megacycles, and connected to the tan antenna lead in series with the short wave dummy and to the black ground lead, adjust the oscillator short wave trimmer until generator signal is picked up. This trimmer is the one closest to the front of the chassis of the group of three trimmers located next to the gang condenser (see top view of chassis).
   (b) Adjust short wave antenna trimmer to resonance. This adjustment is to the right of the 6F7 tube and is the one closest to the front of the chassis (see top view).
   (c) Re-set external oscillator to 9 megacycles and pick up oscillator signal by rotating variable condenser, moving dial pointer. Check for tracking and sensitivity and do not bend plates. NOTE: It is extremely necessary in making all of the above adjustments that the fundamental signal of the oscillator be tuned in and not the image frequency, which will fall below the fundamental.

Intermediate Band Alignment—
(2.3 - 7.6 Megacycles)

1. With wave selector switch in the center position and with dial pointer set to 7 megacycles, makes the following adjustments:
   (a) With external oscillator set at 7 magacycles and connected in series with the short wave dummy antenna to the tan antenna lead and black ground lead, same as for short wave adjustments, adjust center trimmer of oscillator coil, part number 110-13, until 7 magacycle signal is picked up. This is the center adjustment of a group of three located next to the gang condenser (see top view).
   (b) Adjust antenna trimmer to resonance, this adjustment is the rear of a group of two located at the right of the chassis next to the 6F7 tube (see top view).
   (c) Re-set external oscillator to 2.5 magacycles (2500 kilocycles), pick up signal by rotating condenser and moving dial pointer. Check for tracking and sensitivity. Do not bend plates. NOTE: It is extremely necessary in making all of the above adjustments that the fundamental signal of the oscillator be tuned in and not the image frequency, which will fall below the fundamental.

Service Notes

To check for open by-pass condensers, shunt each condenser with another of similar capacity and of the same voltage rating, which is known to be good, until the defective unit is located. Open by-pass condensers frequently cause oscillation and distorted tone. Defective and shorted electrolytic filter condensers cause excessive hum, motor-boating, low volume and a reduction in all D.C. voltages. Open or shorted electrolytic and by-pass condensers (across bias resistor of type 42 tube) will cause low volume and distorted tone.

Should the planetary vernier dial drive mechanism fail to function properly, it will probably be found to be due to a cracked or broken compression spring. The drive may be disassembled to replace the compression spring (part number 112-31) by removing the two screws which fasten it to the dial bracket. Before reassembling all parts should be carefully cleaned and a small amount of vaseline applied to the ball bearings. All other dial parts are hardened and should cause no trouble.

Notes—(Series "A" Only)

25 Cycle chassis differ from regular 60 cycle and 40 cycle chassis in that a larger electrolytic filter condenser is used. The regular condenser is part number 119-11 and the larger unit for the 25 cycle chassis is part number 119-12.

Part number 106-18, a metal clad resistor, consists of the following sections with resistances and wattages as noted: one, 500 ohms; one, 35 ohms, one, 200 ohms, all 1/3 watt, plus or minus 10%.

ALIGNING INSTRUCTIONS—SERIES "B" & "C"

NOTE: These instructions are written for series "C". The instructions are identical for series "B", except that for series "B" the I.F. frequency is 370 kilocycles and for series "C", 465 kilocycles. Also, the I.F. transformers are different:

Series "B"
Part No. 108-26—Input I. F. Trans.
Part No. 108-28—Output I. F. Trans.
Series "C"
Part No. 108-38—Input I. F. Trans.
Part No. 108-40—Output I. F. Trans.

Description of various dummy antennas used and referred to in these instructions:

(1) I.F. Dummy—Consists of a .1 mfd. condenser connected in series with the external oscillator.

(2) Broadcast Dummy—Consists of a 200 mmfd. condenser and a 20 ohm resistor connected in series with each other and in series with the external oscillator.

(3) Intermediate and Short Wave Dummy—Consists of a .1 mfd. condenser and a 400 ohm resistor connected in series with each other and in series with the external oscillator.

Aligning I. F. Transformers

1. With volume control full on, the extreme right of its rotation, and with wave changing switch in the broadcast position, extreme left of its rotation, and with variable condenser at its minimum capacity position, plates entirely out of mesh, adjust the I.F. transformers (two adjustments at the top of parts number 108-38 and 108-40—see top view).
   (a) Connect external oscillator which has been adjusted to 465 kilocycles in series with I.F. dummy antenna, to the control grid cap of the type 6D6 tube and chassis ground. Adjust output I.F. transformer, part number 108-40, to resonance.
   (b) Move generator output clip from grid of 6D6 to grid cap of 6F7 tube and align input I.F. transformer, part number 108-38.
   (c) With generator connected to grid of type 6F7 tube, readjust output I.F. transformer, part number 108-40, to resonance.

Broadcast Band Alignment—
(530 - 1720 Kilocycles)

1. With wave changing switch in the broadcast position, extreme left of its rotation, and with gang condenser in its minimum capacity position, plates entirely out of mesh, connect an external oscillator in series with broadcast dummy antenna to tan antenna and black ground leads and make the following adjustments:
   (a) With external oscillator set at 1720 kilocycles, adjust oscillator trimmer to resonance, for location of this adjustment, number 6, see diagram.
   (b) Re-set external oscillator to 1400 kilocycles, rotate condenser, pick up oscillator signal and adjust antenna trimmer to resonance. For location of this adjustment, number 3, see diagram.
   (c) Re-set external oscillator to 600 kilocycles and adjust series pad to resonance, rotate condenser and move dial pointer to 600 kilocycles by gently rocking condenser to and fro. Pick up oscillator signal while adjusting series pad to resonance, maximum deflection on an output meter. This adjustment is accessible from the top of the chassis and is located between variable condenser and power transformer, see top view—part number 124-16.
   (d) Check for tracking and sensitivity at 1000 kilocycles.

NOTE (Series "B" and "C" Only)

25 Cycle Chassis differ only from 60 cycle chassis in that part number 104-18 transformer is used in place of 50/60 cycle transformer, part number 104-14.

Short Wave Band Alignment—
(7.6 - 19.0 Megacycles)

1. This band is aligned after the I.F. adjustments have been completed. Set wave changing switch to short wave position, extreme right of its rotation, set dial pointer to 18 megacycles.
   (a) With external oscillator adjusted to 18 megacycles and connected in series with short wave dummy antenna to tan antenna and black ground leads, adjust the oscillator short wave trimmer until generator signal is picked up. For location of this adjustment, number 4, see diagram.
   (b) Adjust short wave antenna trimmer to resonance. For location of this adjustment, number 1, see diagram.
   (c) Re-set external oscillator to 9 megacycles, rotate condenser, move dial pointer to 9 megacycles and check for tracking and sensitivity. Do not bend plates. NOTE: It is extremely necessary in making all of the above adjustments that the fundamental signal of the oscillator be tuned in and not the image frequency, which will fall below the fundamental.

Intermediate Band Alignment—
(2.35 - 7.7 Megacycles)

1. With wave changing switch in center position, and with dial pointer set to 7 megacycles, make the following adjustments:
   (a) With external oscillator set at 7 megacycles and connected in series with short wave dummy antenna, as for short wave adjustments, adjust trimmer of oscillator coil, part number 110-22 until 7 megacycle signal is picked up. For location of this adjustment, number 5, see diagram.
   (b) Adjust antenna trimmer to resonance, adjustment number 2, see diagram.
   (c) Re-set external oscillator to 2.5 megacycles (2500 kilocycles), rotate variable condenser, move pointer, pick up oscillator signal and check for tracking and sensitivity. NOTE: It is extremely necessary in making all of the above adjustments that the fundamental signal of the oscillator be tuned in and not the image frequency, which will fall below the fundamental.

©John F. Rider, Publisher

GOODYEAR SERVICE

MODELS 888,889
Schematic, Voltage Socket, Trimmers Parts

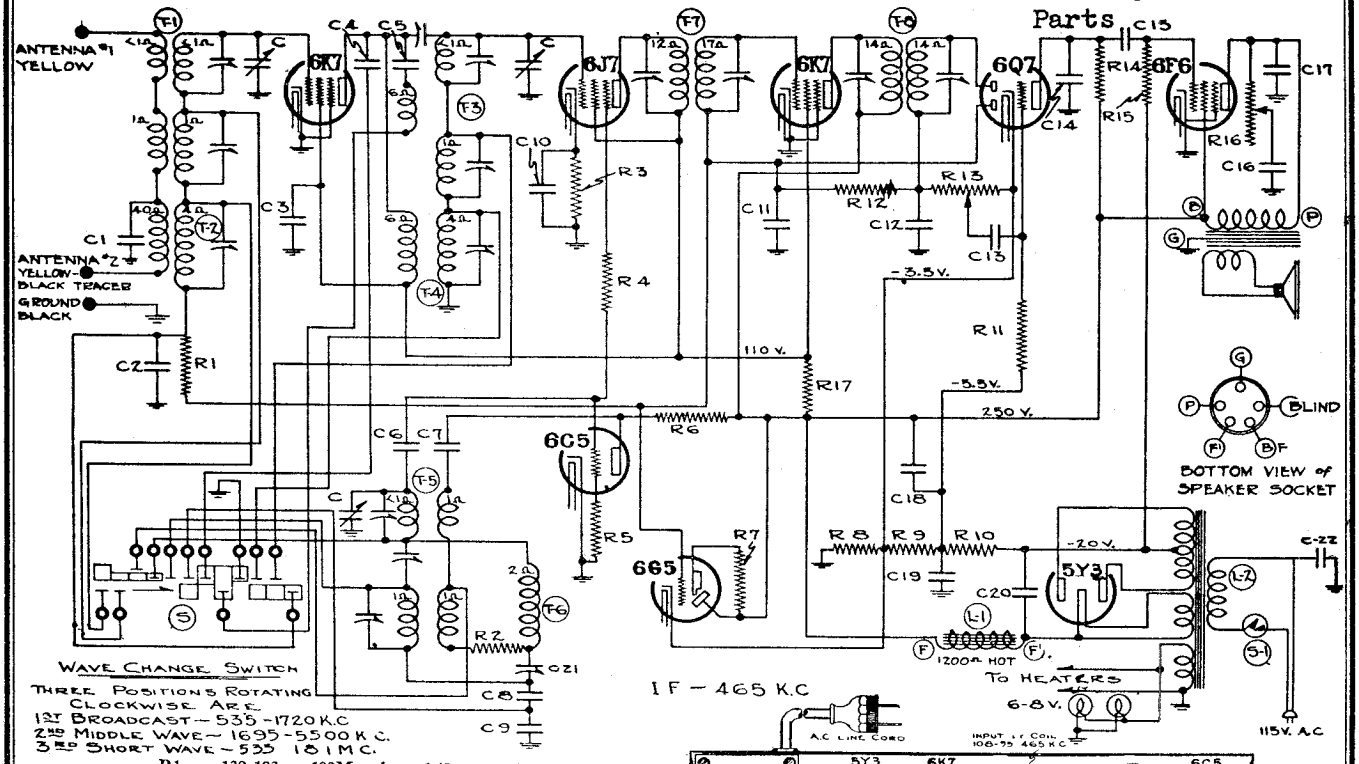

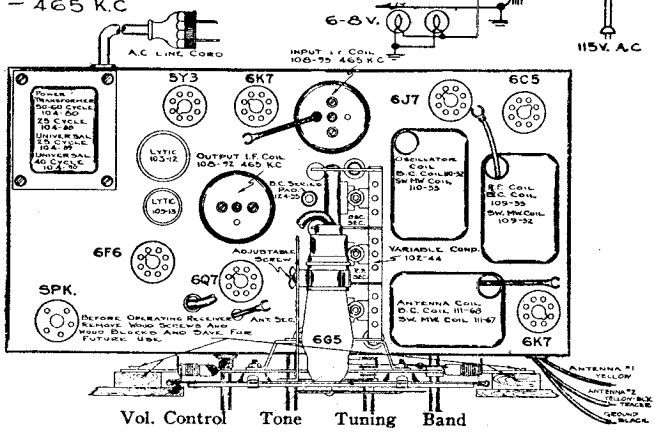

	R1	130-103	100M ohm—1/3 w.—10%
	R2	130-60	100 ohm—1/3 w.—20%
	R3	130-159	2500 ohm—1/3 w.—10%
	R4	130-60	100 ohm—1/3 w.—20%
	R5	130-52	50M ohm—1/3 w.—20%
	R6	130-77	10M ohm—1 w.—20%
	R7	130-110	1 megohm—1/10 w.—10%
	R8	106-33	55 ohm—Muter
	R9	106-33	30 ohm—Muter
	R10	106-33	240 ohm—Muter
	R11	130-4	3 megohm—1/3 w.—20%
	R12	130-38	2 megohm—1/3 w.—20%
	R13	101-65	500M ohm—Volume Control
	R14	130-103	100M ohm—1/3 w.—10%
	R15	130-102	500M ohm—1/3 w.—10%
	R16	101-53	50M ohm—Tone Control
	R17	130-160	10M ohm—2 w.—Wire Wound 10%

NOTE: R8—R9—and R10 in one unit Part No. 106-33

	C1	129-40	.0001 Mica—10%
	C2	100-9	.05x200 v.—25%
	C3	100-53	.25x400 v.—25%
	C4	129-59	.0003 Mica—5%
	C5	129-38	.00005 Mica—10%
	C6	129-38	.00005 Mica—10%
	C7	100-25	.002x600 v.—25%
	C8	129-70	.004 Mica—2½ %
	C9	129-71	.002 Mica—2½ %
	C10	100-20	.1x200 v.—25%
	C11	100-26	.02x400 v.—25%
	C12	129-40	.0001 Mica—10%
	C13	100-11	.01x400 v.—25%
	C14	129-2	.0005 Mica—20%
	C15	100-11	.01x400 v.—25%
	C16	100-27	.025x600 v.—25%
	C17	100-25	.002x600 v.—25%
	C18	103-13	8.0x400 v.—Lytic
	C19	100-20	.1x200 v.—25%
	C20	103-12	8.0x275 v.—Lytic Regulating
	C21	124-35	Series Pad
	C22	100-61	.02x600 ±20%
	C	102-44	Section of three gang condenser
	T1	111-67	MW-SW Antenna Coil Assembly
	T2	111-68	Broadcast Antenna Coil Assembly
	T3	109-32	MW-SW R. F. Coil Assembly
T4	109-33		B. C.-R. F. Coil Assembly
T5	110-53		M. W.-S. W. Oscillator Coil Assembly
T6	110-52		B. C. Osc. Coil Assembly
T7	108-93		Input I. F. Coil 465 kc.
T8	108-92		Output I. F. Coil 465 kc.
L1	114-56		Speaker 6"
L1	114-65		Speaker 10"—field Resistance—1200 ohm
L2	104-80		Power Transformer—50-60 cycles
S	125-25		Band Switch
S1	101-65		On-off switch on Volume Control

FREQUENCY RANGE
535 to 1720 K.C. (Kilocycles)
1695 to 5500 K.C. (Kilocycles)
5.35 to 18.1 M.C. (Megacycles)

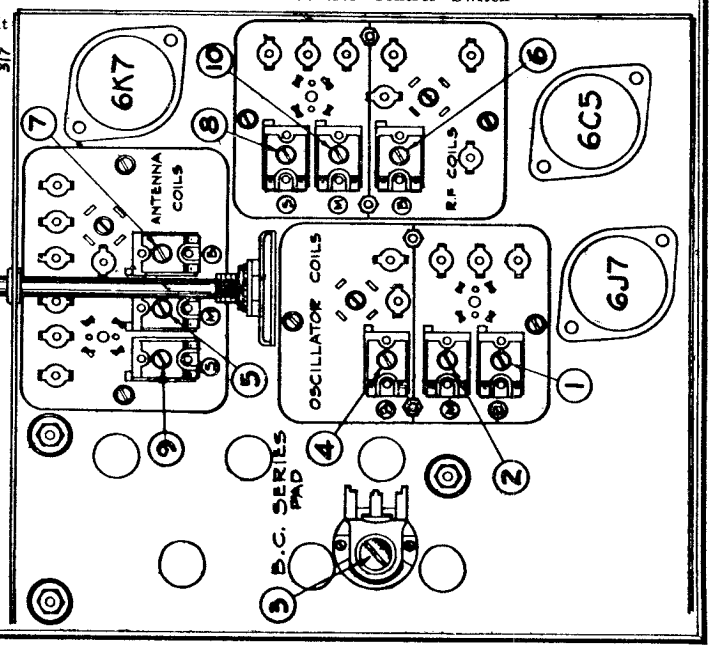

©John F. Rider, Publisher

MODELS 888,889
Alignment

GOODYEAR SERVICE

RESONANCE INDICATOR:

Use as a resonance indicator an output meter connected across the primary of the speaker input transformer or by means of an adapter between the plate and screen terminals of the type 6F6 output tube. Maximum deflection of the meter indicates resonance. Use only enough signal to get a readily readable output. A low range output meter or the low scale of a multi-range meter should be used.

DUMMY ANTENNAS:

The following dummy antennas are used in aligning and are referred to in the following alignment instructions as "Dummy 1", "Dummy 2", and "Dummy 3".

Dummy 1: (I.F.)—Consists of a .1 mfd. condenser connected in series with the external oscillator.

Dummy 2: (Broadcast)—Consists of a 200 mmfd. condenser and a 20 ohm resistor connected in series with each other and in series with the with the external oscillator.

Dummy 3: (Middle and Short Wave)—Consists of a .1 mfd. condenser and a 400 ohm resistor connected in series with each other and in series with the external oscillator.

ALIGNING I.F. TRANSFORMERS: (465 K.C.):

Part No. 108-92 Output I.F. Transformer
Part No. 108-93 Input I.F. Transformer

These I.F. transformers have two adjustments, both of which are accessible from the top of chassis (see top view).

1. With volume control full on, (the extreme right of its rotation), the band changing switch in the broadcast position, (extreme left of its rotation), and with the variable condenser set to approximately 1400 kilocycles, make the following adjustments:
   (a) Connect external oscillator set at 465 kilocycles, in series with "Dummy 1", to the control grid cap of the type 6K7 tube, and adjust the output I.F. transformer (No. 108-92) to resonance.
   (b) With "Dummy 1" still connected, move oscillator output clip from grid of 6K7 to grid cap of 6J7 and adjust input I.F. transformer (No. 108-93) to resonance.

BROADCAST BAND ALIGNMENT:

535 to 1720 Kilocycles

1. With band changing switch in the broadcast position, extreme left of its rotation, and with gang condenser in its minimum capacity position, plates entirely out of mesh, and with external oscillator connected in series with "Dummy 2" to antenna and ground leads make following adjustments:
   (a) Set external oscillator to 1720 K.C. and adjust broadcast oscillator trimmer to resonance. (Adjustment number 4; see bottom view of coil assembly, Fig. 3)
   (b) Re-set external oscillator to 1400 K.C., rotate variable gang condenser and pick up signal. Adjust broadcast R.F. trimmer (adjustment number 6) and broadcast antenna trimmer (adjustment number 7), to resonance.
   (c) Re-set external oscillator to 600 K.C., and adjust broadcast series pad (adjustment number 3), to resonance by rotating condenser to approximately 600 K.C., rocking it slowly to and fro until by adjusting series pad maximum output is attained. This adjustment is located on the bottom of the chassis directly under the variable gang condenser. (See bottom view of chassis, Fig. 3).
   (d) Repeat adjustments "a" and "b" until sensitivity is at its maximum.
   (e) Check for tracking and sensitivity at 1400, 1000, and 600 kilocycles. **Under no circumstances bend plates of variable condenser sections to correct tracking.**

SHORT WAVE BAND ALIGNMENT:

5.35 to 18.1 Megacycles

1. With band changing switch in the short wave position, extreme right of its rotation, and with external oscillator set at 17 megacycles and connected in series with "Dummy 3" to the antenna and ground leads, make the following adjustments:
   (a) Move dial pointer to 17 megacycles and adjust short wave oscillator trimmer (adjustment number 1) to resonance.
   (b) Adjust short wave R.F. trimmer (adjustment number 8), and short wave antenna trimmer (adjustment number 9), to resonance.
   (c) Re-set external oscillator and check set at 18.1 megacycles and 6 megacycles for band coverage and sensitivity.

NOTE: It is extremely necessary in making all of these adjustments that the fundamental oscillator signal be tuned in and not the image frequency which will fall below the fundamental on the receiver dial. As an example of this a fundamental 17 megacycle signal can be tuned in not only at 17 on the dial but also at approximately 16.1 megacycles.

MIDDLE WAVE BAND ALIGNMENT:

1695 to 5500 Kilocycles

1. With band changing switch in the middle wave position, center of its rotation, and with external oscillator set at 5 megacycles and connected in series with "Dummy 3" to the antenna and ground leads make the following adjustments:
   (a) Move dial pointer to 5 megacycles and adjust middle wave oscillator trimmer (adjustment number 2) to resonance.
   (b) Adjust middle wave R.F. trimmer (adjustment number 10), and middle wave antenna trimmer (adjustment number 5), to resonance.
   (c) Re-set external oscillator and check sensitivity at 1800 kilocycles.
   (d) Recheck broadcast band alignment.

ANTENNA AND GROUND LEADS:

You will notice three wires coming out of the back of the chassis, — the **yellow** wire and the **black with yellow tracer** wire are used for doublet antenna connections. The **black** wire is the ground connection.

For conventional types of antennas connect the **yellow** wire to the antenna lead and the **yellow with black tracer** and the **black** wire together to the ground lead.

When a doublet antenna is used connect the **yellow** wire and **the yellow with black tracer** wire to the doublet antenna and the solid **black** wire to the ground lead. (See Fig. 1—Top View, page 2).

ANTENNA:

For the best results an outside antenna approximately 75-100 feet long including the lead-in should be used. It should be erected as high as possible and as far from surrounding objects as practical. Both the antenna and lead-in should be placed at right angles to street car lines and incoming power lines and as far from any electrical apparatus which may be in the vicinity (such as elevator motors) as practical.

DESCRIPTION:

The tube complement of this chassis consists of the following metal and octal base glass tubes which are interchangeable with metal tubes:

1—Type 6K7 Remote cut-off pentode R.F. amplifier.
1—Type 6J7—pentode first detector.
1—Type 6C5 Oscillator.
1—Type 6K7 Remote cut-off pentode I.F. amplifier (465 K.C.)
1—Type 6Q7G duplex diode triode second detector, A.V.C. and audio.
1—Type 6F6G—pentode output amplifier.
1—Type 5Y3G or 5W4—high vacuum rectifier.
1—Type 6G5 Cathode ray tuning indicator.

Transformers are available and chassis are sometimes equipped with universal transformers for operation on 25, 40 and 60 cycles and with primary taps for 108, 127, 150, 225, and 260 volts, (see instructions) and also sometimes equipped with 25 cycle transformers with 105-115 volt or 220 volt primaries, not universals.

IN ORDER TO PREVENT SIGNAL FROM ACTING UPON AVC AND AFFECTING ACCURACY OF VOLTAGE MEASUREMENTS, AERIAL AND GROUND LEADS SHOULD BE SHORT CIRCUITED WHILE MAKING MEASUREMENTS.

©John F. Rider, Publisher

Socket, Trimmers
Parts

GOODYEAR SERVICE

MODEL 1174
Schematic, Voltage

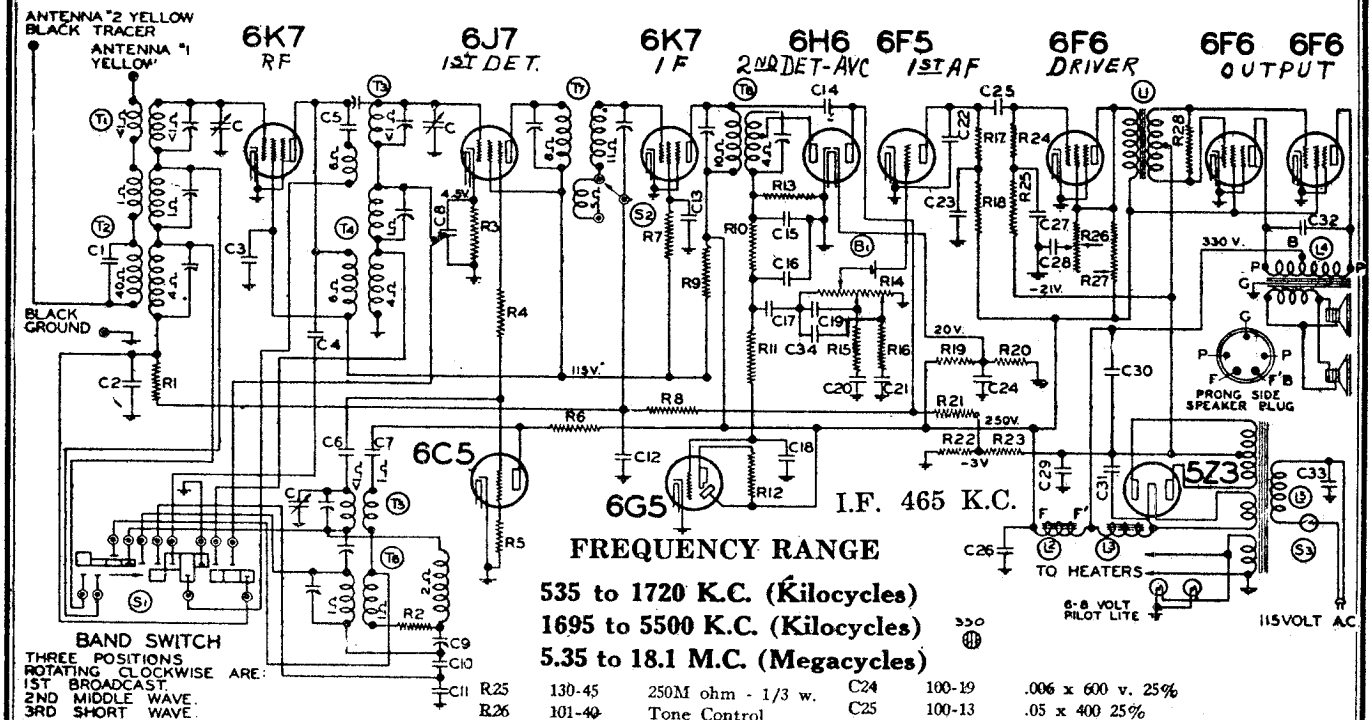

FREQUENCY RANGE

535 to 1720 K.C. (Kilocycles)
1695 to 5500 K.C. (Kilocycles)
5.35 to 18.1 M.C. (Megacycles)

BAND SWITCH
THREE POSITIONS ROTATING CLOCKWISE ARE:
1ST BROADCAST.
2ND MIDDLE WAVE.
3RD SHORT WAVE.

R1	130-20	100M - 1/3 w. - 20%
R2	130-166	150 ohm - 1/3 w. - 10%
R3	130-129	2500 ohm - 1/3 w. - 10%
R4	130-60	100 ohm - 1/3 w. - 10%
R5	130-12	50M ohm - 1/3 w. - 20%
R6	130-133	15 M ohm - 1/2 w. - 20%
R7	130-76	30M ohm - 1/3 w. - 20%
R8	130-19	1 megohm - 1/3 w. - 20%
R9	130-88	10M ohm - 2 w. - 20% - wire
R10	130-20	100 M ohm - 1/3 w. - 20%
R11	130-4	3 megohm 1/3 w. - 20%
R12	130-110	1 megohm - 1/10 w. - 20%
R13	130-20	100M ohm - 1/3 w. - 20%
R14	101-36	1 megohm - Volume Control
R15	130-22	5M ohm - 1/3 w. - 20%
R16	130-85	3M ohm - 1/3 w. - 20%
R17	130-20	100M ohm - 1/3 w. - 20%
R18	130-20	100M ohm - 1/3 w. - 20%
R19	130-130	100M ohm - 1/2 w. - 10%
R20	130-82	10M - 1/3 w. - 10%
R21	130-3	500M ohm - 1/3 w. - 20%
R22	106-31	27 ohms
R23	106-31	175 ohms
R24	130-45	250M ohm - 1/3 w. - 20%
R25	130-45	250M ohm - 1/3 w.
R26	101-40	Tone Control
R27	130-131	20M ohm - 1/2 w.
R28	130-21	20M ohm - 1/3 w.
		R22 and R23 in one
C	102-35	3 gang variable cond
C1	129-40	.0001 Mica 10%
C2	100-9	.05 x 200 v. 25%
C3	100-53	.25 x 400 v. 20%
C4	129-59	.0003 Mica 5%
C5	129-38	.00005 Mica 10%
C6	129-38	.00005 Mica 10%
C7	100-25	.002 x 600 v. 25%
C8	100-20	.1 x 200 v. 25%
C9	124-35	.00074 Series Pad.
C10	129-70	.004 Mica 2½%
C11	129-71	.002 Mica 2½%
C12	100-9	.05 x 200 25%
C13	100-11	.01 x 400 25%
C14	129-3	.00002 Mica 20%
C15	129-60	.00015 Mica 20%
C16	129-60	.00015 Mica 20%
C17	100-22	.05 x 200 25%
C18	100-11	.01 x 400 25%
C19	129-2	.0005 Mica 20%
C20	100-22	.05 x 200 25%
C21	100-22	.05 x 200 25%
C22	129-40	.0001 Mica 10%
C23	100-20	.1 x 200 25%
C24	100-19	.006 x 600 v. 25%
C25	100-13	.05 x 400 25%
C26	103-8	14. mfd. x 400 w. v. lytic
C27	100-20	.1 x 200 25%
C28	100-45	.1 x 600 v. 25%
C29	100-20	.1 x 200 v. 25%
C30	103-10	30 mfd. x 450 w. v. lytic
C31	103-5	8 mfd. lytic 475 w. v.
C32	100-32	.0005 x 1000 v. 20%
C33	100-61	.02 x 600 v. Bakelite 20%
C34	129-60	.00015 Mica 20%

PARTS

R1	116-22	Bias Cell
T1	111-67	M.W. - S.W. Antenna
T2	111-68	B.C. Antenna
T3	109-32	M.W. -S.W. - R. F.
T4	109-33	B.C. - R.F.
T5	110-53	M.W. - S.W. Oscillator
T6	110-52	B.C. Oscillator
T7	108-64	Input I.F.
T8	108-63	Output I.F.
L1	105-33	Audio Transformer
L2		Speaker field (1225 ohm) hot
L3	105-41	Choke (100 ohms)
L4	114-53-114-54	Dual Speakers
L5	104-72	Power Transformer-50-60 cycle
S1	125-29	Band Switch
S2		Fidelity switch on tone control
S3		On-off switch on volume control

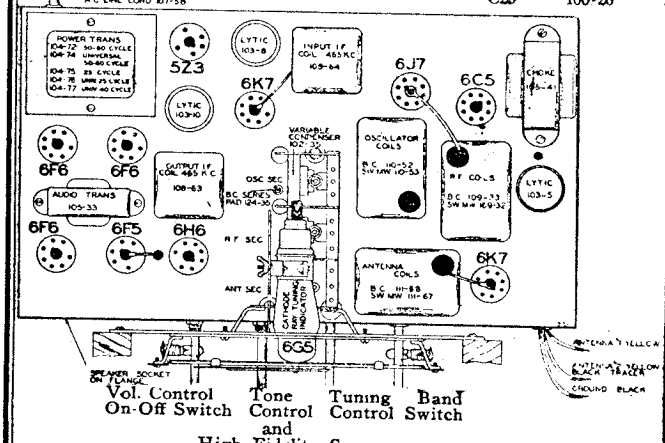

FIG. 1—TOP VIEW

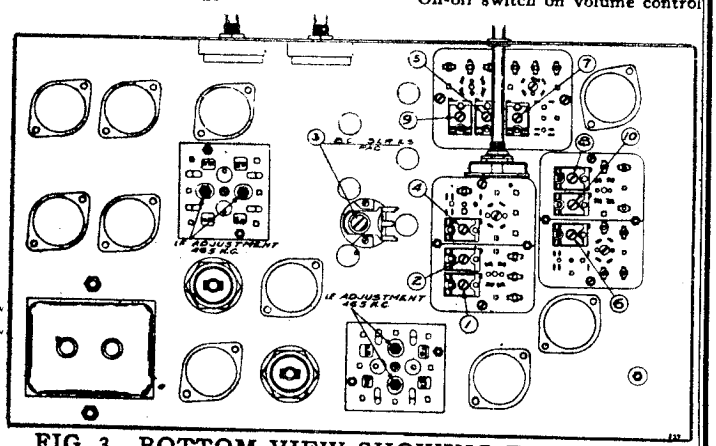

FIG. 3.—BOTTOM VIEW SHOWING TRIMMERS

©John F. Rider, Publisher

MODEL 1174
Alignment

GOODYEAR SERVICE

RESONANCE INDICATOR:

Use as a resonance indicator an output meter connected across the primary of the speaker input transformer or by means of an adapter between the plate and cathode terminals of the 5 prong speaker socket. Maximum deflection of the meter indicates resonance. Use only enough signal to get a readily readable output. A low range output meter or the low scale of the multi-range meter should be used.

DUMMY ANTENNAS:

The following dummy antennas are used in aligning and are referred to in the following alignment instructions as "Dummy 1," "Dummy 2," and "Dummy 3."

Dummy 1: (I.F.)—Consists of a .1 mfd. condenser connected in series with the external oscillator.

Dummy 2: (Broadcast)—Consists of a 200 mmfd. condenser and a 20 ohm resistor connected in series with each other and in series with the external oscillator.

Dummy 3: (Middle and Short Wave)—Consists of a .1 mfd. condenser and a 400 ohm resistor connected in series with each other and in series with the external oscillator.

ALIGNING I.F. TRANSFORMERS (465 K.C.)

Part No. 108-63 Output I.F. Transformer
Part No. 108-64 Input I. F. Transformer

These I.F. transformers have two adjustments, both of which are accessible from the underside of chassis (see bottom view Fig. 3).

1. With volume control full on, (the extreme right of its rotation), the band changing switch in the broadcast position, (extreme left of its rotation), the tone control on "Hi" part of the sharp position (as much right rotation as possible without operating the Hi Fidelity switch), and with the variable condenser set to approximately 1400 kilocycles, make the following adjustments:
   (a) Connect external oscillator set at 465 kilocycles, in series with "Dummy 1," to the control grid cap of the type 6K7 tube, located between the two I.F. transformers, and adjust the output I.F. transformer 108-63 to resonance.
   (b) With "Dummy 1" still connected, move oscillator output clip from grid of 6K7 to grid cap to 6J7 and adjust input I.F. transformer (108-64) to resonance.
   (c) With oscillator still connected to 6J7, re-adjust output I.F. transformer if necessary.

SHORT WAVE BAND ALIGNMENT:
5.35 to 18.1 Megacycles

1. With band changing switch in the short wave position, extreme right of its rotation, and with external oscillator set at 17 megacycles and connected in series with "Dummy 3" to the antenna and ground leads, make the following adjustments:
   (a) Move dial pointer to 17 megacycles and adjust short wave oscillator trimmer (adjustment number 1) to resonance.
   (b) Adjust short wave R.F. trimmer (adjustment number 8), and short wave antenna trimmer (adjustment number 9), to resonance.
   (c) Re-set external oscillator and check set at 18.1 megacycles and 6 megacycles for band coverage and sensitivity.

NOTE: It is extremely necessary in making all of these adjustments that the fundamental oscillator signal be tuned in and not the image frequency which will fall below the fundamental on the receiver dial. As an example of this a fundamental 17 megacycle signal can be tuned in not only at 17 on the dial but also at approximately 16.1 megacycles.

MIDDLE WAVE BAND ALIGNMENT:
1695 to 5500 Kilocycles

1. With band changing switch in the middle wave position, center of its rotation, and with external oscillator set at 5 megacycles and connected in series with "Dummy 3" to the antenna and ground leads make the following adjustments:
   (a) Move dial pointer to 5 megacycles and adjust middle wave oscillator trimmer (adjustment number 2) to resonance.
   (b) Adjust middle wave R.F. trimmer (adjustment number 10), and middle wave antenna trimmer (adjustment number 5), to resonance.
   (c) Re-set external oscillator and check sensitivity at 1800 kilocycles.

BROADCAST BAND ALIGNMENT:
535 to 1720 Kilocycles

1. With band changing switch in the broadcast position, extreme left of its rotation, and with gang condenser in its minimum capacity position, plates entirely out of mesh, and with external oscillator connected in series with "Dummy 2" to antenna and ground leads make following adjustments:
   (a) Set external oscillator to 1720 K.C. and adjust broadcast oscillator trimmer to resonance. (Adjustment number 4; see bottom view of coil assembly, Fig. 3)
   (b) Re-set external oscillator to 1400 K.C., rotate variable gang condenser and pick up signal. Adjust broadcast R.F. trimmer (adjustment number 6) and broadcast antenna trimmer (adjustment number 7), to resonance.
   (c) Re-set external oscillator to 600 K.C., and adjust broadcast series pad (adjustment number 3) to resonance by rotating condenser to approximately 600 K.C., rocking it slowly to and fro until by adjusting series pad maximum output is attained. This adjustment is located on the bottom of the chassis directly under the variable gang condenser. (See bottom view of chassis, Fig. 3).
   (d) Repeat adjustments "a" and "b" until sensitivity is at its maximum.
   (e) Check for tracking and sensitivity at 1400, 1000, and 600 kilocycles. **Under no circumstances bend plates of variable condenser sections to correct tracking.**
   (f) Recheck short wave and middle wave band alignment.

ANTENNA AND GROUND LEADS:

You will notice three wires coming out of the back of the chassis, — the **yellow** wire and the **black with yellow tracer** wire are used for doublet antenna connections. The **black** wire is the ground connection.

For conventional types of antennas connect the **yellow** wire to the antenna lead and the **yellow with black tracer** and the **black** wire together to the ground lead.

When a doublet antenna is used connect the **yellow** wire and the **yellow with black tracer** wire to the doublet antenna and the solid **black** wire to the ground lead. (See Fig. 1—Top View, page 2).

ANTENNA:

For the best results an outside antenna approximately 75-100 feet long including the lead-in should be used. It should be erected as high as possible and as far from surrounding objects as practical. Both the antenna and lead-in should be placed at right angles to street car lines and incoming power lines and as far from any electrical apparatus which may be in the vicinity (such as elevator motors) as practical.

Reception on the short wave band can be sometimes improved by means of an approved doublet antenna.

DESCRIPTION:

The tube complement of this chassis consists of the following metal and octal base glass tubes which are interchangeable with metal tubes:

1—Type 6K7 Remote cut-off pentode R.F. amplifier
1—Type 6J7 Pentode first detector
1—Type 6C5 Oscillator
1—Type 6K7 Remote cut-off pentode I.F. amplifier (465 K.C.)
1—Type 6H6 Duplex diode second detector and A.V.C.
1—Type 6F5 First audio amplifier
1—Type 6F6 Triode driver stage
2—Type 6F6 Class AB Output pentodes in push-pull
1—Type 5Z3 High vacuum rectifier
1—Type 6G5 Cathode Ray Tuning Indicator.

Transformers are available and chassis are sometimes equipped with universal transformers for operation on 25, 40 and 60 cycles and with primary taps for 108, 127, 150, 225, and 260 volts, (see instructions) and also sometimes equipped with 25 cycle transformers with 105-115 volt or 220 volt primaries, not universals.

©John F. Rider, Publisher

©John F. Rider, Publisher

WIRING DIAGRAM—GOODYEAR CHASSIS 101500

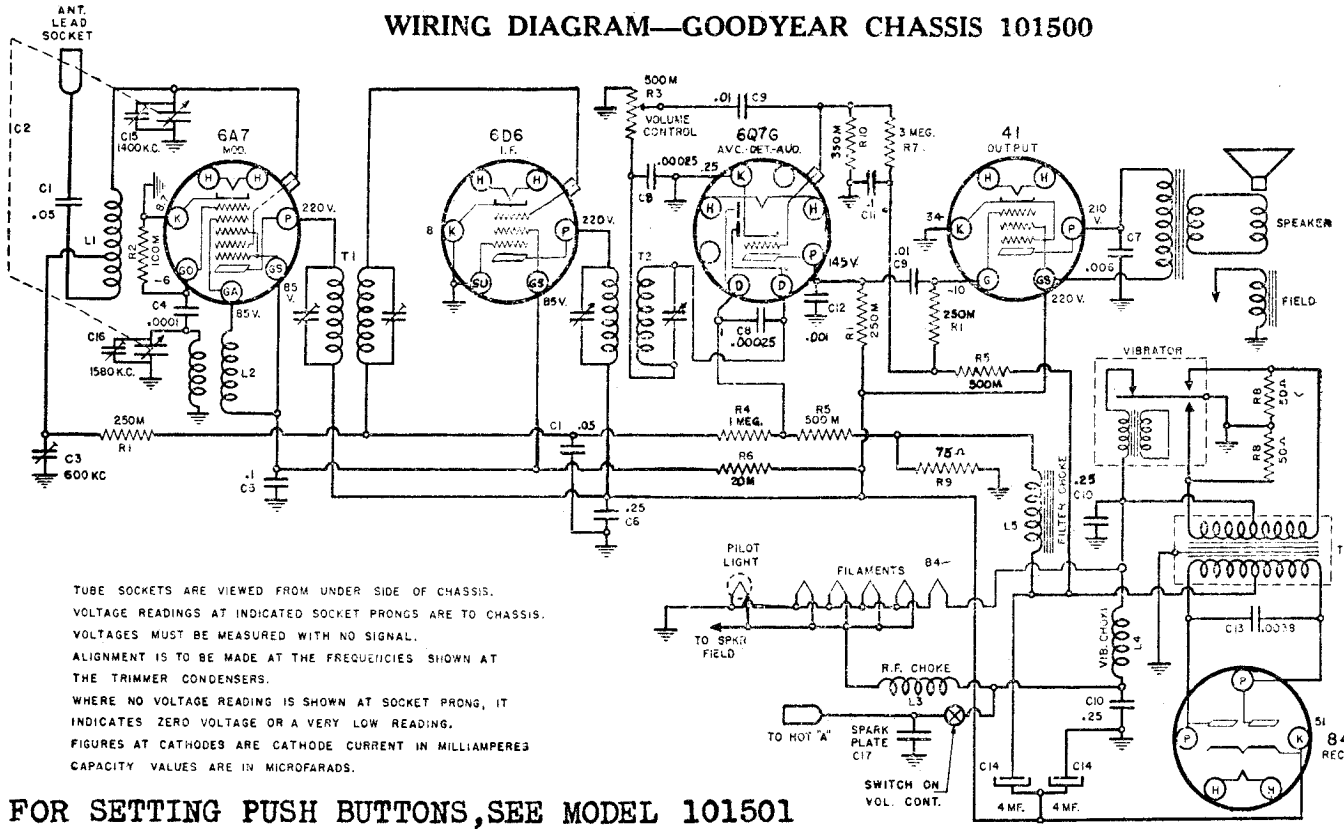

TUBE SOCKETS ARE VIEWED FROM UNDER SIDE OF CHASSIS.
VOLTAGE READINGS AT INDICATED SOCKET PRONGS ARE TO CHASSIS.
VOLTAGES MUST BE MEASURED WITH NO SIGNAL.
ALIGNMENT IS TO BE MADE AT THE FREQUENCIES SHOWN AT THE TRIMMER CONDENSERS.
WHERE NO VOLTAGE READING IS SHOWN AT SOCKET PRONG, IT INDICATES ZERO VOLTAGE OR A VERY LOW READING.
FIGURES AT CATHODES ARE CATHODE CURRENT IN MILLIAMPERES
CAPACITY VALUES ARE IN MICROFARADS.

LOCATIONS OF PARTS UNDER CHASSIS

1—6A7 Pentagrid Converter.
1—6D6 I.F. Amplifier.
1—6Q7G Detector Audio Amplifier.
1—41 Power Amplifier.
1—84 Full Wave Rectifier.

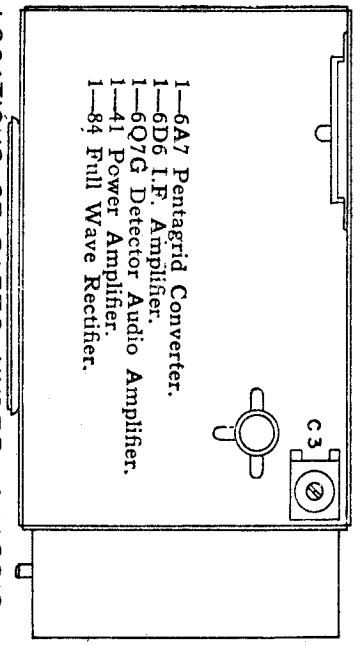

LOCATIONS OF PARTS ON TOP OF CHASSIS

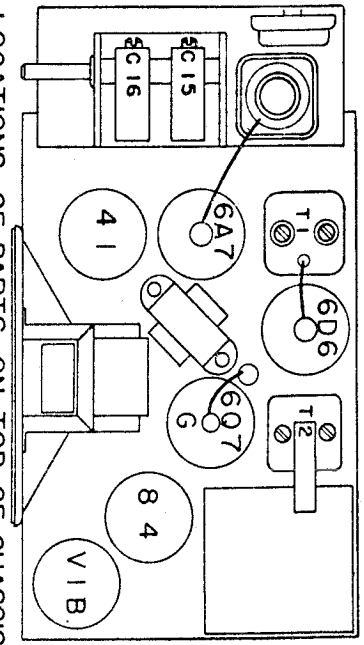

FOR SETTING PUSH BUTTONS, SEE MODEL 101501

ALIGNMENT PROCEDURE

PRELIMINARY

Output Meter Connections	Across Loud Speaker Voice Coil
Output Meter Reading to Indicate 1 Watt	1.85 Volts
Generator Ground Lead Connection	Receiver Chassis
Dummy Antenna Value to Be in Series with Generator Output	See Chart Below
Connection of Generator Output Lead	See Chart Below
Generator Modulation	30%, 400 Cycles
Position of Volume Control	Fully On

Position of Variable	Generator Frequency	Dummy Antenna	Generator Connection	Trimmer Adjustments (In Order Shown)	Trimmer Function
Closed	456 KC	.1 mfd.	6A7 Grid	T2, T1	I. F.
Fully Open	1580 KC	.0002 mfd.	Antenna Conn.	C16	Oscillator Trimmer
1400 KC	1400 KC	.0002 mfd.	Antenna Conn.	C15	Antenna Trimmer
600 KC	600 KC	.0002 mfd.	Antenna Conn.	C3	Antenna Padder

The variable condenser should be at 600 k.c. for antenna adjustment.

The alignment procedure should be repeated in the original order, step by step, to insure greater accuracy. A final adjustment of antenna padder condenser C3 is always made after the receiver is installed in the car, in order to match the car antenna.

Always keep the output power from the generator at its lowest possible value to prevent the A.V.C. of the receiver from interfering with accurate alignment.

MODEL 101500
Wings Junior
Installation, Parts

GOODYEAR SERVICE

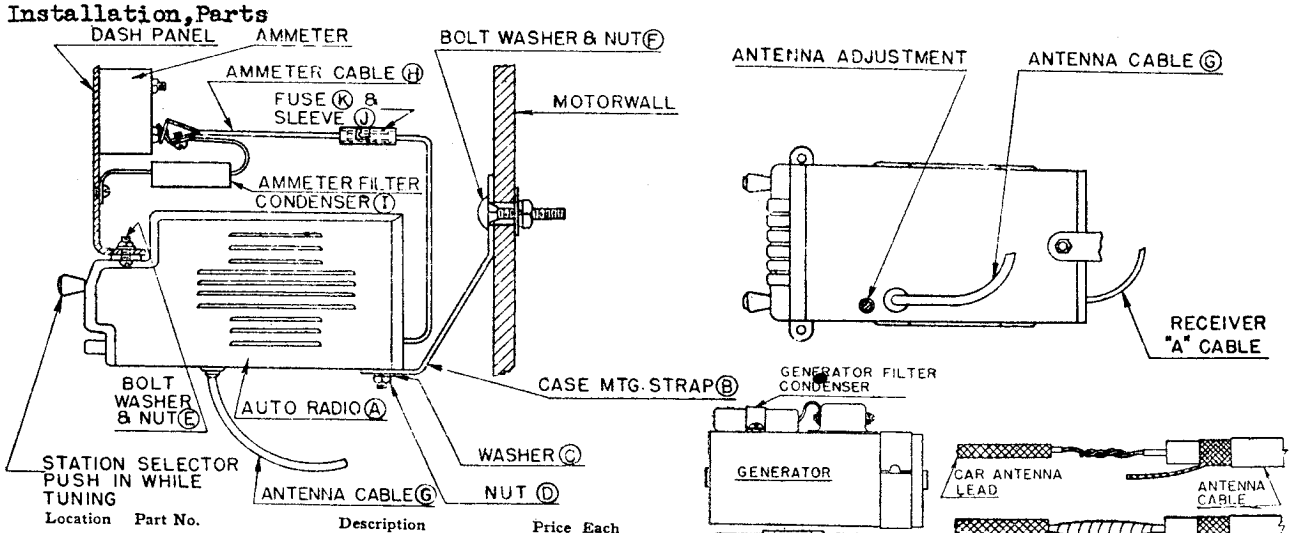

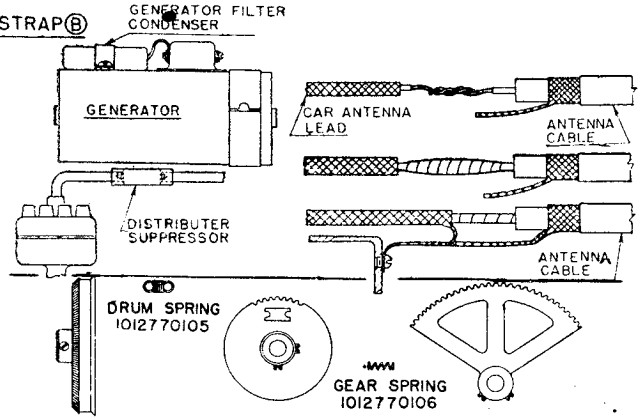

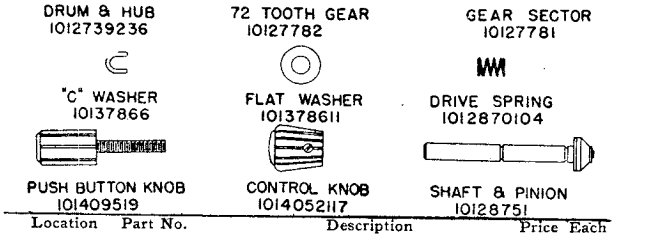

Location	Part No.	Description	Price Each
E	101379701	Bolt—3/8-16x3" Carriage	$0.05*
	10141944	Booklet—Instruction	.30
	1011323121	Cable—"A"	.15
G	1011323125	Cable—Antenna	.85
H	1011323122	Cable Ammeter	.25
L3	1011633210	Choke—R.F. (Ignition)	.20
L4	1011633211	Choke—R.F. (Vibrator)	.20
L5	1011733209	Choke—Filter—325 ohms	.75
C1		Condenser—.05 mfd. 200 volt (Tubular)	.25
C2	1012019127	Condenser—Variable Tuning C15 and C16	2.00
C3	1011920117	Condenser—300-600 mmfd. (Padder)	.30
C4		Condenser—100 mmfd. 600 volt (Mica)	.25
C5		Condenser—.1 mfd. 400 volt (Tubular)	.25
C6		Condenser—.25 mfd. 400 volt (Tubular)	.25
C7		Condenser—.006 mfd. 600 volt (Tubular)	.25
C8		Condenser—250 mmfd. 600 volt (Mica)	.25
C9		Condenser—.01 mfd. 400 volt (Tubular)	.25
C10	1012216111	Condenser—.25 x .25 mfd. 200 volt (Tubular)	.35
C11		Condenser—.1 mfd. 200 volt (Tubular)	.25
C12		Condenser—1000 mmfd. 600 volt (Mica)	.25
C13		Condenser—.0038 mfd. 1600 volt (Tubular)	.35
C14		Condenser—4. mfd. 350 volt (Electrolytic)	.55
C17	10164991	Condenser—Spark Plate	.15
I	1012118225	Condenser—Ammeter	.30
L	1012118224	Condenser—Generator	.35
R3	1012524119	Control—Volume 500M ohm	.80
	1012739236	Drum (with Hub)	.35
	1012940113	Escutcheon—(Station Tab)	.50
	1013722103	Eyelets (Dial) Doz.	.10
	101271111	Frame—Dial (Pulley Assem.)	.55
K	101314300	Fuse—15 amps.	.10
	10127782	Gear Assem. 72 tooth	.30
	10127781	Gear Sector	.30
	10127485	Glass—Dial	.20
	1014052117	Knob—Volume and Selector	.15
	101409519	Knob—Push Button with Stem	.15
	101318908	Light—Dial 6 volt	.15
F	101375604	Nut 3/8"-16 Doz.	.15
E	1013756103	Nut No. 10-32 Doz.	.10
D	1013756104	Nut 1/4"-20 Doz.	.15
	10146588	Pointer	.10
M	10148961	Resistor (Distributor Suppressor)	.35
R1		Resistor—250M ohm 1/2 Watt	.20
R2		Resistor—100M ohm 1/2 Watt	.20
R4		Resistor—1 megohm 1/2 Watt	.20
R5		Resistor—500M ohm 1/2 Watt	.20
R6		Resistor—20M ohm 1 Watt	.20
R7		Resistor—3 megohm 1/2 Watt	.20
R8		Resistor—50 ohm 1/2 Watt	.20
R9		Resistor—75 ohm 1/2 Watt	.20
R10		Resistor—350M ohm 1/2 Watt	.20
	1012667370	Scale—Dial	.25
E	101137976	Screw—10-32x3/4 R.H.M.S. Doz.	.10
	10128751	Shaft Assembly Drive	.15
	10149717	Shield—Tube (6D6)	.15
	101497114	Shield—Tube and Cap (6A7)	.20
J	101497052	Sleeve—Fibre (Fuse)	.05
	10138871	Socket—Pilot Light	.10
	101386855	Socket—8 Prong	.15
	101386853	Socket—7 Prong	.15
	101386852	Socket—6 Prong	.15
	101386851	Socket—5 Prong	.10
	101386850	Socket—4 Prong	.10
	1015179240	Speaker—5" Dynamic	3.35
	1016180157	*Transformer	1.25
	1012770106	Spring—72 tooth Gear Assem.	.05
	1012770105	Spring—Drum	.05
	1012870104	Spring—Compression	.05
B	10111111	Strap—Mounting (Case)	.25
	1012783107	String	.15
N	10141461	Tabs—(Station Booklet)	.15
O	10141486	Tabs—(Clear Celluloid) Set	.10
L1	1011810223	Transformer—(Antenna)	.50
L2	1011810224	Transformer—(Oscillator)	.70
T1	1015510221	Transformer—1st I.F. Complete	1.25
T2	1015710222	Transformer—2nd I.F. Complete	1.25
T3	1016580153	Transformer—Power	2.35
	10123951	Tuner—Push Button	3.10
	1016234101	Vibrator	3.50
C	101378610	Washer—Lockwasher—1/4" Doz.	.10
F	101378628	Washer—Lockwasher—3/8" Doz.	.10
E	10137864	Washer—Lockwasher—No. 10 Doz.	.10
E	101378634	Washer—Flat—No. 10 Doz.	.10
F	101378629	Washer—Flat—3/8"x1" O.D. Doz.	.10
	101378611	Washer—Flat—(Shaft) Doz.	.10
	10137865	Washer—"C" Doz.	.10

*When ordering speaker output transformer refer to number stamped on speaker frame.

©John F. Rider, Publisher

GOODYEAR SERVICE

MODEL 101501
Wings All Weather
Schematic, Voltage
Alignment, Socket
Trimmers

LOCATIONS OF PARTS ON TOP OF CHASSIS

LOCATIONS OF PARTS UNDER CHASSIS

GOODYEAR CHASSIS 101501

TUBE SOCKETS ARE VIEWED FROM UNDER SIDE OF CHASSIS.
VOLTAGE READINGS AT INDICATED SOCKET PRONGS ARE TO CHASSIS.
VOLTAGES MUST BE MEASURED WITH NO SIGNAL.
ALIGNMENT IS TO BE MADE AT THE FREQUENCIES SHOWN AT THE TRIMMER CONDENSERS.
WHERE NO VOLTAGE READING IS SHOWN AT SOCKET PRONG, IT INDICATES ZERO VOLTAGE OR A VERY LOW READING.
FIGURES AT CATHODES ARE CATHODE CURRENT IN MILLIAMPERES.
CAPACITY VALUES ARE IN MICROFARADS.

ALIGNMENT PROCEDURE

PRELIMINARY

Output Meter Connections ..... Across Loud Speaker Voice Coil
Output Meter Reading to Indicate 1 Watt ..... 1.85 Volts
Generator Ground Lead Connection ..... Receiver Chassis
Dummy Antenna Value to Be in Series with Generator Output ..... See Chart Below
Connection of Generator Output Lead ..... See Chart Below
Generator Modulation ..... 30%, 400 Cycles
Position of Volume Control ..... Fully On

Position of Variable	Generator Frequency	Dummy Antenna	Generator Connections	Trimmer Adjustment (In Order Shown)	Trimmer Function
Closed	262 KC	.1 mfd.	6A8 Grid	T5, T4	I.F.
Fully Open	1580 KC	.0002 mfd.	Antenna Conn.	C3	Oscillator Trimmer
1400 KC	1400 KC	.0002 mfd.	Antenna Conn.	C2, C6	Ant. & R.F. Trimmer
600 KC (Rock)	600 KC	.1 mfd.	6K7 R.F. Grid	C9	Padder Oscillator
600 KC	600 KC	.0002 mfd.	Antenna Conn.	C5	Padder Antenna

The variable condenser should be rocked back and forth a degree or two while making the 600 K.C. adjustment on oscillator padder only.

A final adjustment of the antenna padder condenser C5 is always made after the receiver is installed in the car, in order to match the car antenna.

Always keep the output power from the generator at its lowest possible value to prevent the A.V.C. of the receiver from interfering with accurate alignment.

The alignment procedure should be repeated in the original order, step by step, to insure greater accuracy.

©John F. Rider, Publisher

MODEL 101501
Wings All Weather
Installation, Tuner
Parts

GOODYEAR SERVICE

MODELS 101500, 101503
Tuner Data

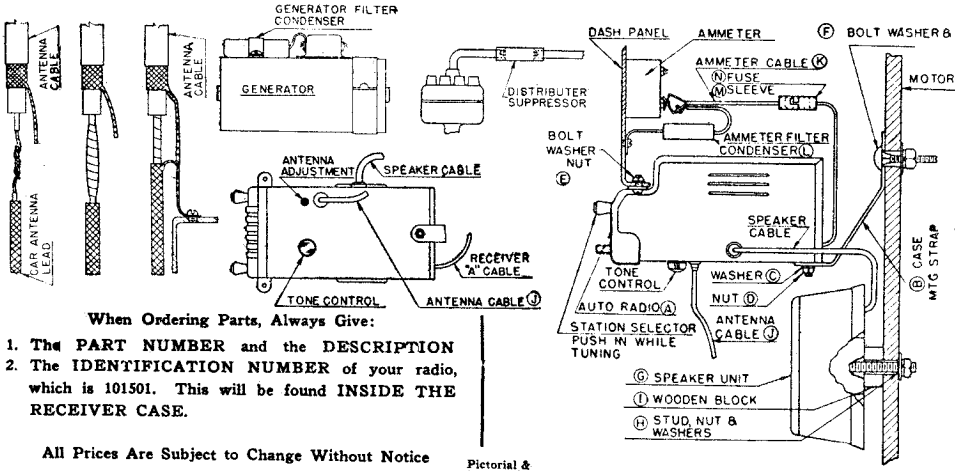

When Ordering Parts, Always Give:

1. The **PART NUMBER** and the **DESCRIPTION**
2. The **IDENTIFICATION NUMBER** of your radio, which is 101501. This will be found **INSIDE THE RECEIVER CASE.**

All Prices Are Subject to Change Without Notice

Pictorial & Schematic Location	Part Number	Description	Selling Price, Each
F	101379701	Bolt 3/8—16x3" Carriage Bolt	.05
	10141945	Booklet Instruction	.30
	1011323121	Cable—"A"	.15
J	1011323124	Cable—Antenna	.85
K	1011323122	Cable—Ammeter	.25
L1	1011733208	Choke—Filter	.85
L2	1011633212	Choke—R.F. (Ignition)	.20
L3	1011633211	Choke—R.F. (Vibrator)	.20
C1		Condenser—.05 mfd. 200 volt (Tubular)	.25
C4	1012019128	Condenser—Variable Tuning C2 and C3	3.00
C9	1011920117	Condenser—300-600 mmfd. (Padder)	.30
C6	101192052	Condenser—2-20 mmfd. (Trimmer)	.15
C7	1011915110	Condenser—.0012 mfd. 600 volt (Mica)	.25
C8		Condenser—100 mmfd. 600 volt (Mica)	.25
C5	1011920116	Condenser—600-1200 mmfd. (Padder)	.40
C10		Condenser—.05 mfd. 400 volt (Mica)	.25
C11		Condenser—250 mmfd. 600 volt (Mica)	.25
C12		Condenser—1000 mmfd. 600 volt (Mica)	.25
C13	1012216120	Condenser—.25 mfd. 200 volt (Tubular)	.25
C14		Condenser—.01 mfd. 600 volt (Tubular)	.25
C15		Condenser—.5 mfd. 200 volt (Tubular)	.25
C16		Condenser—.005 mfd. 1600 volt (Tubular)	.50
C17	1012118222	Condenser—8. mfd. 350 volt (Electrolytic)	.25
C18	10164991	Condenser—Spark Plate	.65
L	1012118225	Condenser—Ammeter	.15
O	1012118224	Condenser—Generator	.30
R10	1012426115	Control—Tone 200M ohm	.35
R11	1012524119	Control—Volume—500M ohm	.70
	1012739236	Drum (with Hub)	.80
	1012940114	Escutcheon (Station Tab)	.35
	10137413	Eyelet (Dial and Crystal) Doz.	.50
	101271111	Frame—Dial (pulley assem.)	.10
N	101314300	Fuse—15 Amps.	.55
	10127782	Gear Assem. 72 teeth	.10
	10127781	Gear Sector	.30
	10127485	Glass—Dial	.30
	1014052118	Knob-Tone Control	.20
	1014052119	Knob—Volume and Selector	.15
	101409520	Knob—Push Button with stem	.15
	101318908	Light—Dial 6 volt	.15
F	101375604	Nut 3/8—16 Doz.	.15
E	1013756103	Nut No. 10-32 Doz.	.10
D	1013756104	Nut 1/4"-20 Doz.	.15
	1013722108	Plug—1/4" Button	.10
	$0146588	Pointer	.10
P	10148961	Resistor—(Distributor Suppressor)	.35
R1		Resistor—250M ohm 1/2 Watt	.20
R2		Resistor—50M ohm 1/2 Watt	.20
R3		Resistor—20M ohm 1/2 Watt	.20
R4		Resistor—1 megohm 1/2 Watt	.20
R5		Resistor—500M ohm 1/2 Watt	.20
R6		Resistor—50 ohm 1/2 Watt	$0.20
R7		Resistor—20M ohm 1 Watt	.20
R9		Resistor—150M ohm 1/2 Watt	.20
	1012667371	Scale—Dial	.25
E	101137976	Screw—10-32x3/4 R.H.M.S. Doz.	.10
	10128751	Shaft Assembly Drive	.15
	101497114	Shield—Tube with No. 7115 Cap	.15
M	101497052	Sleeve—Fibre (Fuse)	.05
	1013845102	Socket (Antenna Lead)	.10
	10138871	Socket—Pilot Light	.10
		Socket—8 Prong	.15
		Socket—4 Prong	.10
	1013845107	Socket—Speaker	.10
G	10151841	Speaker and Housing Assembly	8.25
G	1015179241	Speaker	4.35
G	1016180156	Transformer*	1.50
G	10150631	Housing	1.25
G	10150641	Ring—Metal	.70
H	1015074113	Stud 4"—5/16-18	.05
I	1015083113	Wood Block	.10
H	1015056107	Nut 5/16-18 Cad. Plated Doz.	.10
H	101508613	Washer—Flat 3/4 I.D. x 1 1/4 Doz.	.10
H	101508628	Washer—Lockwasher Split 3/8 Doz.	.10
G	1015056106	Pal Nuts 6-32 (Ring Mtg.) Doz.	.10
G	1015074114	Screws—6-32x5/8 (Ring Mtg.) Doz.	.10
G	1015036102	Grille	.65
G	1015023120	Cable—Speaker	1.15
	1012770106	Spring—72 Tooth Gear Assem.	.05
	1012770105	Spring—Drum	.05
	1012870104	Spring—Compression	.05
B	10111111	Strap—Mtg. (Case)	.25
	1012783107	String	.15
Q	10141461	Tabs (Station Call Letter Booklet)	.15
R	10141486	Tabs (Clear Celluloid) Set	.10
T1	1011810208	Transformer (Antenna)	.45
T3	1011810210	Transformer (Oscillator)	.70
T2	1011810209	Transformer R. F. Less Trimmer	.85
T4	10155i0225	Transformer—1st I. F. with Trim.	1.25
T5	1015710226	Transformer—2nd I. F. with Trim.	1.25
T6	1016580150	Transformer—Power	2.95
	10128951	Tuner—Push Button	3.10
	1016234101	Vibrator	3.50
C	101378610	Washer—Lockwasher—1/4" Doz.	.10
F	101378628	Washer—Lockwasher—3/8" Doz.	.10
E	10137864	Washer—Lockwasher—No. 10 Doz.	.10
E	101378634	Washer—No. 10 Flat 5/16 Doz.	.10
	101378611	Washer—Flat—(Shaft) Doz.	.10
	10137866	Washer—C (Drive Shaft) Doz.	.10
F	101378629	Washer—Flat 3/8"x1" O. D. Doz.	.10

*When ordering speaker output transformer refer to number stamped on speaker frame.

HOW TO ADJUST AND OPERATE THE GOODYEAR WINGS SAFETY AUTOMATIC PUSH-BUTTON TUNING

The automatic tuning feature of your radio makes it possible to set up 6 favorite American broadcast stations and tune them in quickly with the Automatic Tuner.

The Automatic Tuner has 6 adjustable Push-Buttons. Each button can be adjusted for one of your favorite stations. CHOOSE STATIONS FOR PUSH-BUTTON OPERATION HEARD WITH GOOD VOLUME AT ALL TIMES. It is not necessary to use all six buttons, if it is not desired.

INDEX TABS

Cut the call letters of your 6 selected stations from the list supplied (See "Q" in Fig. 1) with your receiver and slip them into the Tab Holder FROM THE TOP with the clear celluloid (see "R" in Fig. 1) in front of the call letters to protect them. Arrange the call letters in the Tab Holder from right to left. Have the call letters of the lowest frequency station at the extreme right and work progressively to the left so that the highest frequency call letters will be at the extreme left.

SETTING PUSH-BUTTONS

1. By means of the Station Selector Knob, tune in WITH THE RIGHT HAND AS ACCURATELY AS POSSIBLE the station having the lowest frequency—that is, your selected station which is tuned in nearest the right-hand side of the dial.

2. After the station has been tuned in accurately with the right hand, continue to hold it in its exact position firmly, and with the left hand loosen the Push-Button to be set up for that station by unscrewing the Push-Button about one turn to the left (counter-clockwise).

3. Continuing to hold the Station Selector Knob in its exact position, PUSH THE PUSH-BUTTON IN ALL THE WAY with the left hand.

4. After the Push-Button has been depressed all the way tighten it gently toward the right (clockwise). Release Push-Button slowly and when in normal position grip button and tighten firmly.

The Push-Button tuning system is now correctly set up for your first selected station of lowest frequency and the Call Letter Tab for this station should be at the extreme right of the Call Letter Holder.

Follow through with this same procedure, setting up the other 5 stations in the order of their frequency—that is, the second station set up will be second lowest in frequency and the third station set up will be third lowest in frequency.

Carefully check each Push-Button for the accuracy of its setting. If, when tuning in any station with its Automatic Push-Button it does not have equal volume or clarity to that obtained with manual tuning, this may indicate the automatic adjustment for that station was not made accurately. Should there be any inaccuracy in any one of the Push-Button adjustments, correction can be made by repeating the above procedure for that button only. Do not reset those Push-Buttons that are accurately adjusted.

No further adjustments are necessary to operate your auto radio automatically or manually. To receive any one of your six selected stations for automatic operation, merely push in ALL THE WAY the Button set up for that station.

TO RECEIVE ALL OTHER STATIONS IN THE REGULAR MANNER, PUSH IN THE STATION SELECTOR KNOB AND TURN IT TO THE FREQ. OF THE DESIRED STATION.

©John F. Rider, Publisher

MODEL 101503
Schematic, Voltage

GOODYEAR SERVICE

LOUD SPEAKER:

Type ..... Electro Dynamic
Size ..... 8"

OPERATING FEATURES:

Automatic Volume Control
Push Button Tuning
Tone Control

CHASSIS FEATURES:

Number I.F. Stages ..... One
Antenna ..... Conventional
Condenser, gang ..... Two
Automatic Push Buttons ..... Six
Tone Control ..... Continuous
Wave Band Switch ..... Two-Position
Wave Trap ..... One

POWER OUTPUT:

Type ..... Beam, Parallel
Undistorted ..... 3 Watts
Maximum ..... 3.5 Watts

FREQUENCY RANGE:

Broadcast ..... 535 Kc-1750 Kc
Foreign ..... .5 Mc-18 Mc

ALIGNMENT FREQUENCIES:

Osc. Trimmer	BC Antenna Trimmer	BC Osc. Padder	S.W. Antenna Trimmer	Wave Trap Trimmer
1750 Kc	1400 Kc	600 Kc	16 Mc	456 Kc

INTERMEDIATE FREQUENCY: ..... 456 Kc

TUBES AND FUNCTION:

1—6A7 ..... Modulation
1—6D6 ..... I.F.
1—75 ..... AVC-Det-AF
2—25L6G ..... Output
1—25Z5 ..... Rect.
1—BM17C ..... Ballast

POWER SUPPLY:

Power Main ..... 105-130 Volts AC/DC
Power Consumption ..... 40 Watts

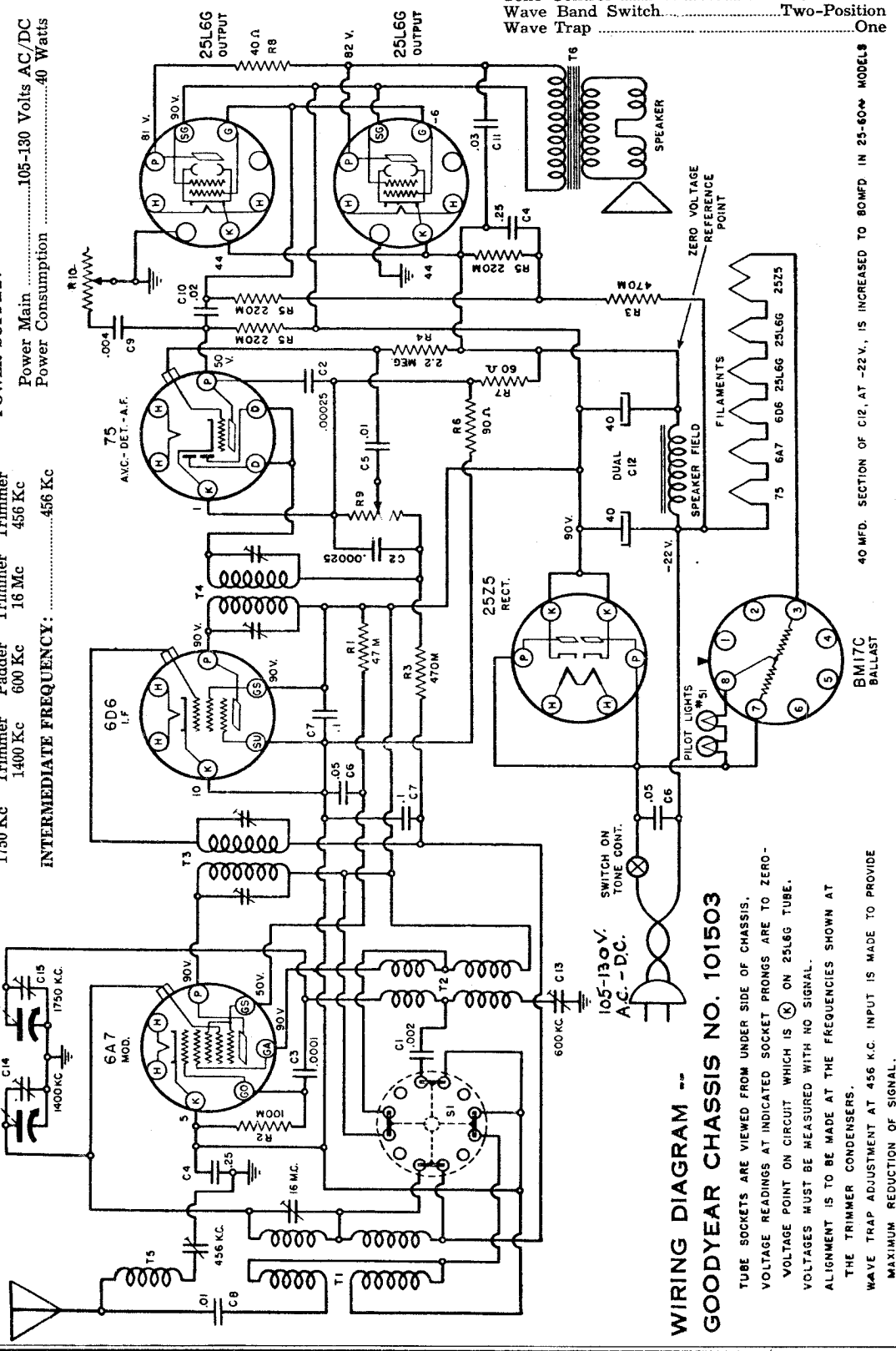

WIRING DIAGRAM --
GOODYEAR CHASSIS NO. 101503

TUBE SOCKETS ARE VIEWED FROM UNDER SIDE OF CHASSIS.

VOLTAGE READINGS AT INDICATED SOCKET PRONGS ARE TO ZERO-VOLTAGE POINT ON CIRCUIT WHICH IS Ⓚ ON 25L6G TUBE.

VOLTAGES MUST BE MEASURED WITH NO SIGNAL.

ALIGNMENT IS TO BE MADE AT THE FREQUENCIES SHOWN AT THE TRIMMER CONDENSERS.

WAVE TRAP ADJUSTMENT AT 456 K.C. INPUT IS MADE TO PROVIDE MAXIMUM REDUCTION OF SIGNAL.

WHERE NO VOLTAGE READING IS SHOWN AT SOCKET PRONG, IT INDICATES ZERO VOLTAGE OR A VERY LOW READING.

FIGURES AT CATHODES ARE CATHODE CURRENT IN MILLIAMPERES.

CAPACITY VALUES ARE IN MICROFARADS.

40 MFD. SECTION OF C12, AT -22 V., IS INCREASED TO 80MFD IN 25-60~ MODELS

©John F. Rider, Publisher

MODEL 101503
Socket, Trimmers
Chassis, Alignment
Coils, Parts, Tuner

GOODYEAR SERVICE

GOODYEAR CHASSIS NO. 101503

FOR SETTING PUSH-BUTTONS, SEE MODEL 101501

MECHANICAL SPECIFICATIONS

OPERATING CONTROLS:

1. Left Knob Bottom....."On-Off" Switch & Tone
2. Right Knob bottom.....Wave Band Switch
3. Left Knob top .....Volume
4. Right Knob top .....Station Selector
5. Lower Buttons .....Automatic Tuning

CONTROL OPERATION:

Turning right; Power on; Tone high
Right S. W.; Left, Broadcast
Turning right; Volume Increase
Tuning Ratio; 8½ to 1
6 Mechanical Station Selection Push Buttons

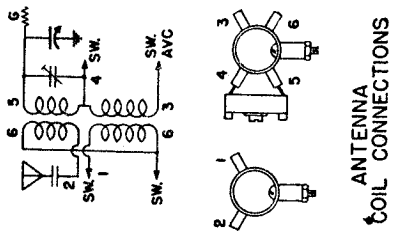

ALIGNMENT PROCEDURE

PRELIMINARY:

Output Meter Connections.....Across Loud Speaker Voice Coil
Output Meter Reading to Indicate 1 Watt.....2.28 Volts
Generator Ground Lead Connection.....Receiver Chassis
Dummy Antenna Value to Be in Series with Generator Output.....See Chart Below
Connection of Generator Output Lead.....See Chart Below
Generator Modulation.....30%, 400 Cycles
Position of Volume Control.....Fully On

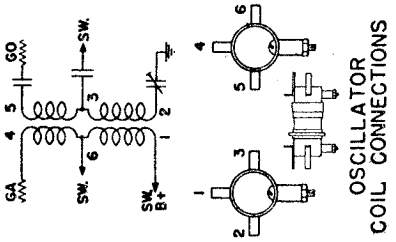

POSITION OF VARIABLE	GENERATOR FREQUENCY	DUMMY ANTENNA	GENERATOR CONNECTIONS	TRIMMER ADJUSTMENT (In Order Shown)	TRIMMER FUNCTION
Closed	456 Kc.	.1 mfd.	6A7 Grid	T3 - T4	I. F.
Closed	456 Kc.	.0002 mfd.	Antenna Conn.	T5 (Min. Output)	Wave Trap
Fully Open	1750 Kc.	.0002 mfd.	Antenna Conn.	C15	Osc. Trimmer
1400 Kc.	1400 Kc.	.0002 mfd.	Antenna Conn.	C14	Ant. Trimmer
600 Kc.	600 Kc.	.0002 mfd.	Antenna Conn.	C13	Osc. Padder
16 Mc.	16 Mc.	400 ohm	Antenna Conn.	T1	S.W. Ant. Trimmer

The variable condenser should be rocked back and forth a degree or two while making the 600 K.C. adjustment on oscillator padder only.

The alignment procedure should be repeated in the original order, step by step, to insure greater accuracy.

Always keep the output power from the generator at its lowest possible value to prevent the A.V.C. of the receiver from interfering with accurate alignment.

When adjusting T5, Antenna Wave Trap, Trimmer, increase generator output. To obtain clearly defined trimmer setting for a minimum output.

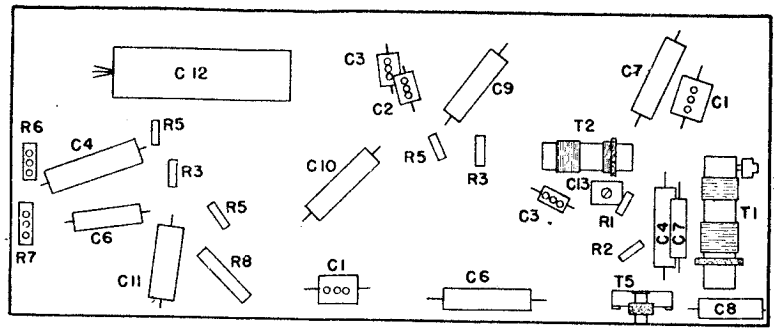

LOCATION OF PARTS UNDER CHASSIS

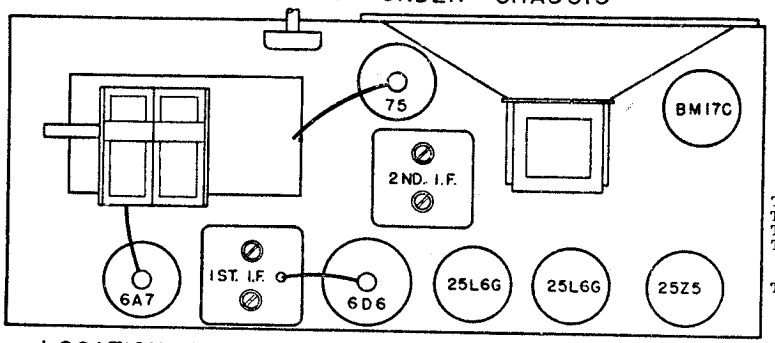

LOCATION OF PARTS ON TOP OF CHASSIS

PARTS LIST - SOURCE NO. 101

All prices are subject to change without notice.

Pictorial & Schematic Location	Part No.	Description	Selling Price Each
		Booklet—Instruction	$0.05
		Bolts—(Mounting Bolts)	.25
	1011242181	Cabinet	8.75
C1		Condenser—2000 mmfd. Mica	.25
C2		Condenser—250 mmfd. Mica	.25
C3		Condenser—100 mmfd. Mica	.25
C4		Cond.—.25 mfd. 200 volt (Tubular)	.25
C5		Cond.—.01 mfd. 200 volt (Tubular)	.25
C6		Cond.—.05 mfd. 400 volt (Tubular)	.25
C7		Cond.—.1 mfd. 200 volt (Tubular)	.25
C8		Cond.—.01 mfd. 400 volt (Tubular)	.25
C9		Cond.—.004 mfd. 600 volt (Tubular)	.25
C10		Cond.—.02 mfd. 400 volt (Tubular)	.25
C11		Cond.—.03 mfd. 600 volt (Tubular)	.25
C12	1012118227	Cond.—40x40 mfd. 200 W. V. (Electrolytic)	1.00
C13	1011920117	Cond.—300-600 mmfd. (Padder)	.30
C14 and 15		Condenser—Variable	2.00
R10	1012426116	Control—Tone—500 ohm with A.C. Switch	.75
R9	1012524120	Control—Volume—500M ohm	.60
	101132307	Cord—110 volt Line	.30
	1012739239	Drum (with Hub)	.35
	1012940116	Escutcheon & Dial Crystal	1.10
	1012940117	Escutcheon—(Station Tab)	.43
	1013922103	Eyelets (Tri-Points)—Dial Scale Doz.	.10
	10127782	Gear Assem. 72 teeth	.30
	10127781	Gear Sector	.30
	1014052122	Knob—Push Button with Stem	.15
	1014052125	Knob—Tuning	.15
	1014052124	Knob—Tone	.15
	1014052123	Knob—Volume	.15
	1014052126	Knob—Wave Band Switch	.15
		Light—Dial 6 volt	.15
		Lugs—Spade (Tuner) 6-32x7-16 Doz.	.10
	1013956102	Nut—⅜-in. Hex. Doz.	.10
	10146589	Pointer	.05
		Pulley—Idler	.05
R1		Resistor—47M ohm	.20
R2		Resistor—100 M ohm	.20
R3		Resistor—470M ohm	.20
R4		Resistor—2.2 megohm	.20
R5		Resistor—220M ohm	.20
R6	1014760181	Resistor—90 ohm	.20
R7	1014760182	Resistor—60 ohm	.20
R8	1014760133	Resistor—40 ohm	.20
		Rivets—(Idler Pulley) Doz.	.10
	1012667382	Scale—Dial	.50
		Screws—Set 8-32x3-16 Doz.	.10
	10128752	Shaft—Drive Assembly	.15
	10149717	Shield—Tube and Base	.15
	10138872	Socket—Pilot Light Assembly	.30
	101386855	Socket—8 Prong	.15
	101386853	Socket—7 Prong	.15
	101386852	Socket—6 Prong	.15
	1015179243	Speaker—Complete with Transformer	5.45
T6		*Transformer	1.00
	1013770106	Spring—72 Tooth Gear Assem.	.05
	1012770105	Spring—Drum	.05
	1012870104	Spring—Compression (Dial Drive)	.05
	1012783107	String	.15
	1015269120	Switch—Wave Band	.60
	10141461	Tabs—(Station Call Letter Booklet)	.15
	10141486	Tabs—(Clear Celluloid)	.10
T1	1011810229	Transformer (Antenna)	.90
T2	1011810230	Transformer—(Oscillator)	.60
T3	1015510227	Transformer—1st I. F.	.95
T4	1015710228	Transformer—2nd I. F.	.95
		Tube—(Ballast—BM17C)	.60
	10128952	Tuner—Push Button	3.10
T5	1016310213	Wave Trap—(Coil & Trimmer)	.45
	10139862	Washer—⅝-in. Shakeproof Doz.	.10
		Washer—No. 4 Shakeproof Doz.	.10
	10128866	Washer—"C" Doz.	.10

*When ordering speaker output transformer refer to number stamped on speaker frame.

©John F. Rider, Publisher

HALLICRAFTERS, INC.

MODEL S-10
Ultra Skyrider
Schematic

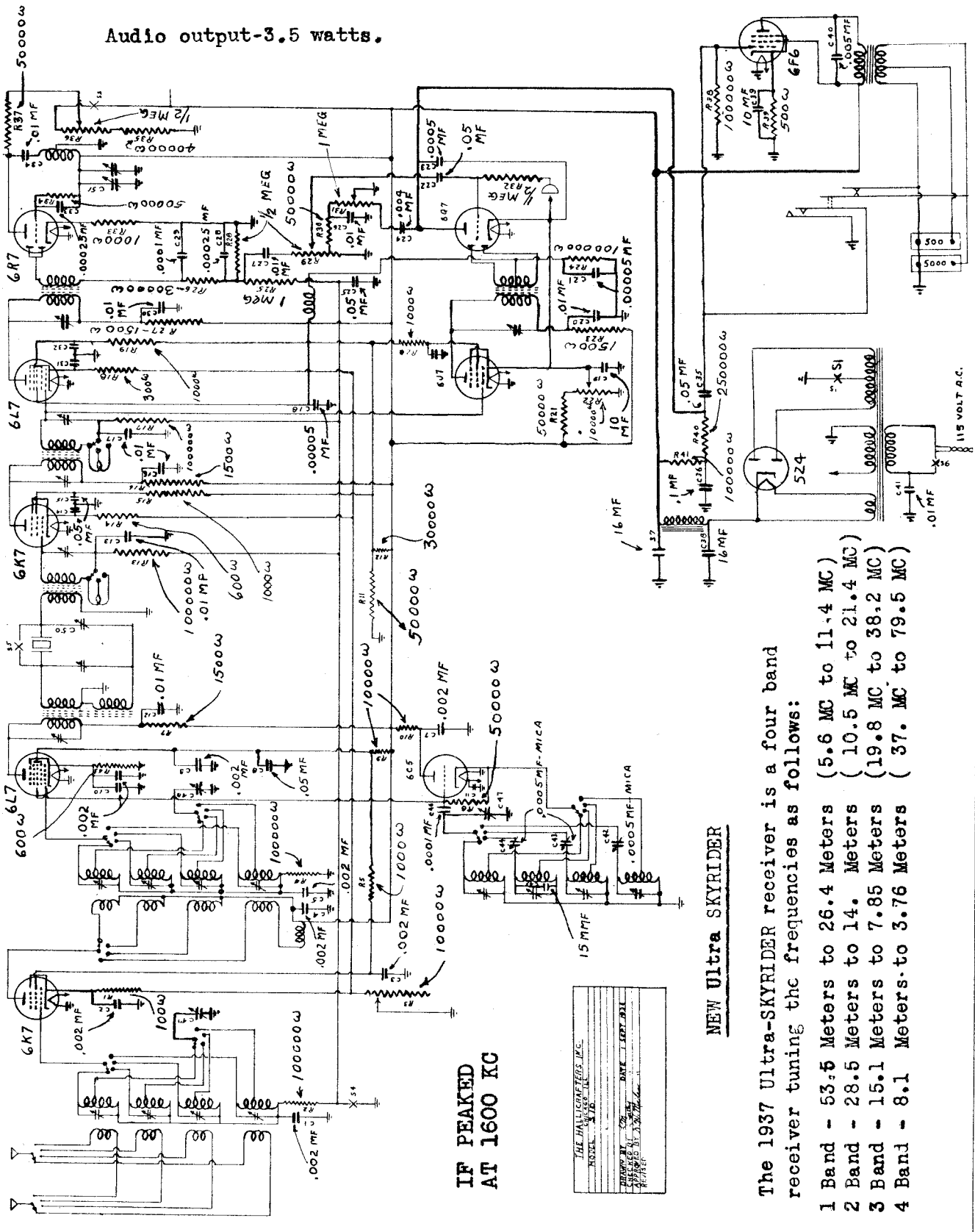

NEW Ultra SKYRIDER

The 1937 Ultra-SKYRIDER receiver is a four band receiver tuning the frequencies as follows:

1 Band - 53.5 Meters to 26.4 Meters (5.6 MC to 11.4 MC)
2 Band - 28.5 Meters to 14. Meters (10.5 MC to 21.4 MC)
3 Band - 15.1 Meters to 7.85 Meters (19.8 MC to 38.2 MC)
4 Band - 8.1 Meters to 3.76 Meters (37. MC to 79.5 MC)

©John F. Rider, Publisher

MODEL S-10
Ultra Skyrider
Socket, Trimmers

HALLICRAFTERS, INC.

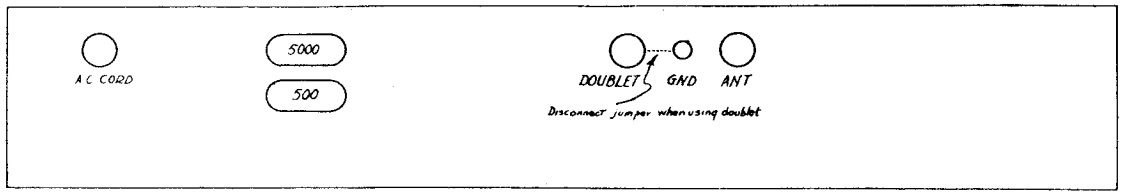

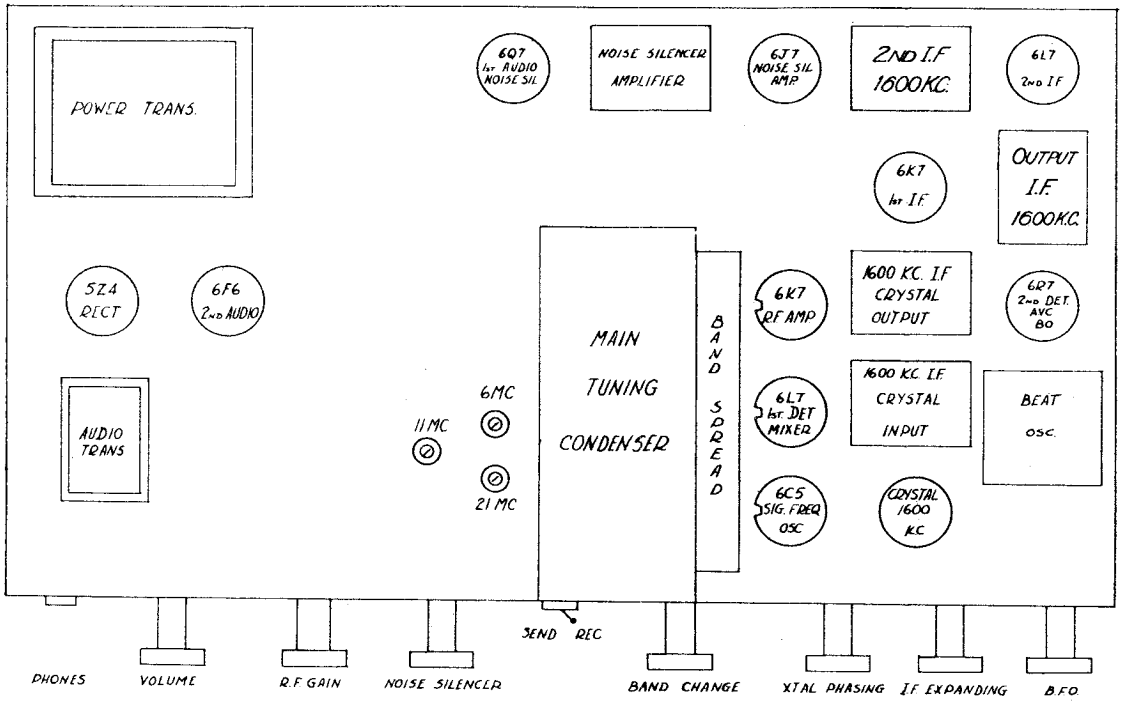

FIG. 1

The tubes used are ten of the METAL types as follows:-

6K7 - RF Amplifier - Pre-Selector
6L7 - 1st Detector - Mixer
6C5 - Signal Frequency Oscillator
6K7 - IF Amp lifier
6L7 - 2nd IF
6R7 - 2nd Detector - AVC - Beat Osc
6J7 - Noise Silencer Amp.
6Q7 - 1s t udio - Noise Silencer
6F6 - 2nd Audio Power Output Stage
5Z4 - Rectifier

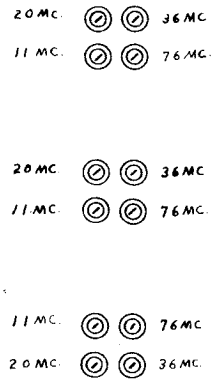

FIG. 5

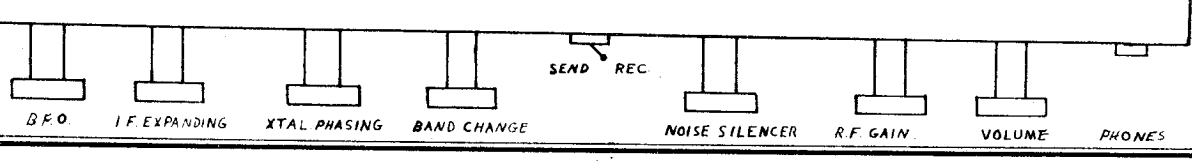

©John F. Rider, Publisher

Intermediate Frequency Alignment.

If the receiver is equipped with a crystal, use the crystal in a separate oscillator.

If the receiver is not an SX10 model set the signal generator for 1600 KC output.

Before I.F. or R.F. alignment see that:

Expander is in the "sharp" position.
B.F.O. switch off.
Audio gain control set at maximum.
R.F. gain control set at maximum.
A.V.C. switch off.
Crystal switch off.
Crystal phasing condenser adjusted for maximum noise level.
Noise silencer control set at 50% rotation.
Do not remove the bottom plate from the chassis.

Remove 6C5 oscillator tube from its socket and connect generator output directly to the grid of the 6L7 1st Detector.

As an output indicator it is suggested a 0-3 volt A.C. Voltmeter be connected across the speaker voice coil.

Align all I.F. trimmers for maximum output.

To adjust noise silencer circuit, set generator output for a strong signal (200MV). Slowly turn noise silencer control clockwise until there is a noticeable dip in the output meter. Now the trimmer on the noise silencer can directly behind the main tuning gang should be tuned for a dip. Adjust noise silencer control and trimmer until maximum rejection of signal is obtained. After this adjustment has been reached set the noise selencer control at a position where rejection of signal just starts to take place. Now retrim the plate trimmer of second I.F. (See which is plate trimmer by shorting trim screw against can for a spark.) The I.F. alignment of the receiver is now complete.

R.F. ALIGNMENT

Check dial - at maximum capacity of gang condenser the dial should stop so that "0" on the dial is opposite "5" on Vernier scale; the pointer which indicates bands should then be on the black line of the dial.

Put the 6C5 tube back in oscillator socket.

Connect generator output through 400 ohm resistor to antenna and ground posts on receiver. (Junper should remain connected.)

Be sure band spread condenser is set at 200 degrees or minimum capacity position.

Set generator for 100 meg output signal at maximum output of generator. During alignment back off on R.F. gain control or the gain on the generator once the signal is hear. Leave the audio control in maximum position at all times.

Set Band Switch to highest frequency range: 38 to 79 megacycles.

Check 40 magacycles on dial for calibration.

If no signal is heard at 40 megacycles and a good signal is heard at 50 megacycles try changing the 6C5 oscillator tube until one which will oscillate at 40 megs is obtained. May be necessary to try various makes of tubes until a good one is obtained.

After signal heard at 40 megacycles, re-set dial to 60 megs. Now adjust the 60 MC trimmer in oscillator section until signal is heard.

Re-set dial to approximately 63 megs and check for image. If image is heard at 63 megs you are on the right side. Note image is on the high frequency side on this hand.

Return dial to 60 megs and peak R.F. and antenna 60 MC. trimmers for greatest output.

Not go back to 40 megs and make sure you are getting a good signal.

While R.F. and antenna trimmers are being peaked the main tuning gang should be rocked backand forth across the signal.

Change band switch to position covering 20 to 38 MC.
Set generator for 6 MC signal.
Set dial at 20 megacycles.
Adjust 20 MC pad on top os chassis until signal is heard.
Re-set dial to 36 MC
Trim 36 MC Oscillator trimmer until signal is heard.
Check for image at 33 megs. Note image is on Low Frequency side.
Now peak R.F. and antenna trimmers for maximum output, rocking main tuning gang while peaking.

Recheck at 20 MC for calibration. A signal should also be heard at 24, 30 and 36 megs, using 6 megacycle signal input.

Set Band switch to 20 to 11 megacycle position.
Set signal generator for 11 megs output.
Set dial at 11 megs. Trim oscillator pad on top of chassis for signal.
Set generator ro 20 meg signal.
Set dial for 20 megs. Adjust osciallator trimmer below chassis for signal.
Now adjust R.F. and antenna trimmers for maximum output, rocking main tuning gang while peaking.
Go backand re-check at 11 megacycles.

Set band switch to 5.5 to 11 megacycle position.
Set generator for 6 MC output.
Set dial to 6 MC - adjust 6 MC pad on top of chassis until signal is heard.
Set generator to 11 MC.
Set dial to 11 MC - adjust oscillator trimmers underneath chassis for signal.
Now peak R.F. and antenna trimmers for maximum output, rocking main tuning gang while peaking.

It may be necessary to go through the above procedure on each band two or three times before maximum performance is secured. A small change at one end of each band will affect the other end.

CRYSTAL FILTER INPUT TRANSFORMER - this transformer is made up of 3 coils phased in such a relation that maximum signal is impressed upon the low inductance primary of 2nd IF transformer. The crystal and crystal phasing circuit is inserted between these transformers in crystal phasing condenser cause single signal action to take place - this action varies by the setting of crystal phasing condenser - when switch is at "out" position the signal is impressed directly on the second transformer.

Crystal filter output transformer has a set-up ratio so that the voltage impressed on grid of 6K7, I.F. Amplifier, is increased over the normal IF transformer connections. By the use of a transformer the grid circuit of this tube is tuned to the I.F. frequency so that greater selectivity is achieved, than if a choke coil is used to supply this tube.

©John F. Rider, Publisher

MODEL S-22
Skyrider Marine
Socket,Trimmers

HALLICRAFTERS, INC.

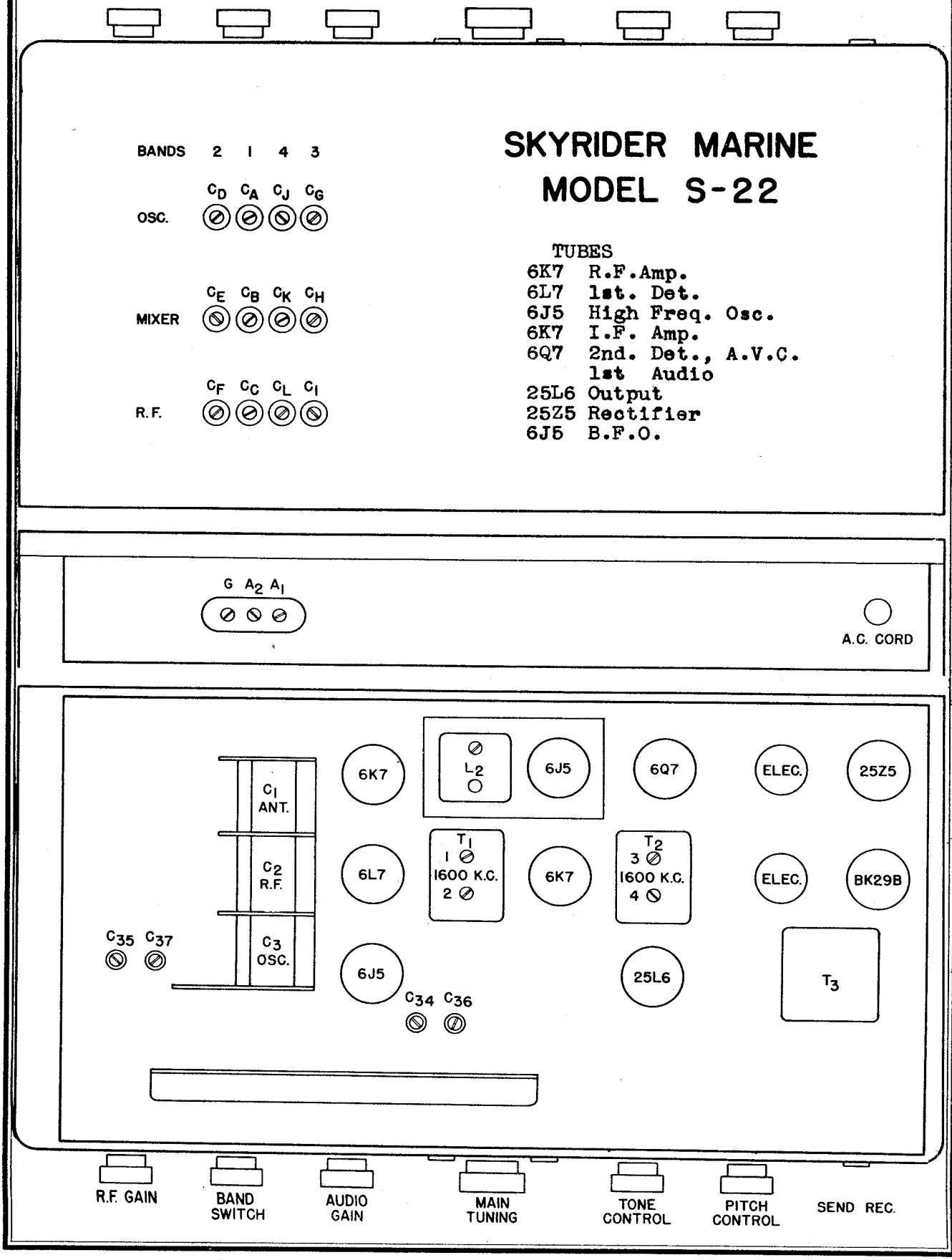

©John F. Rider, Publisher

HALLICRAFTERS, INC.

MODEL S-22
Skyrider Marine
Schematic

The SKYRIDER Marine receiver draws 47 watts at 117 volts 60 cycle A.C.

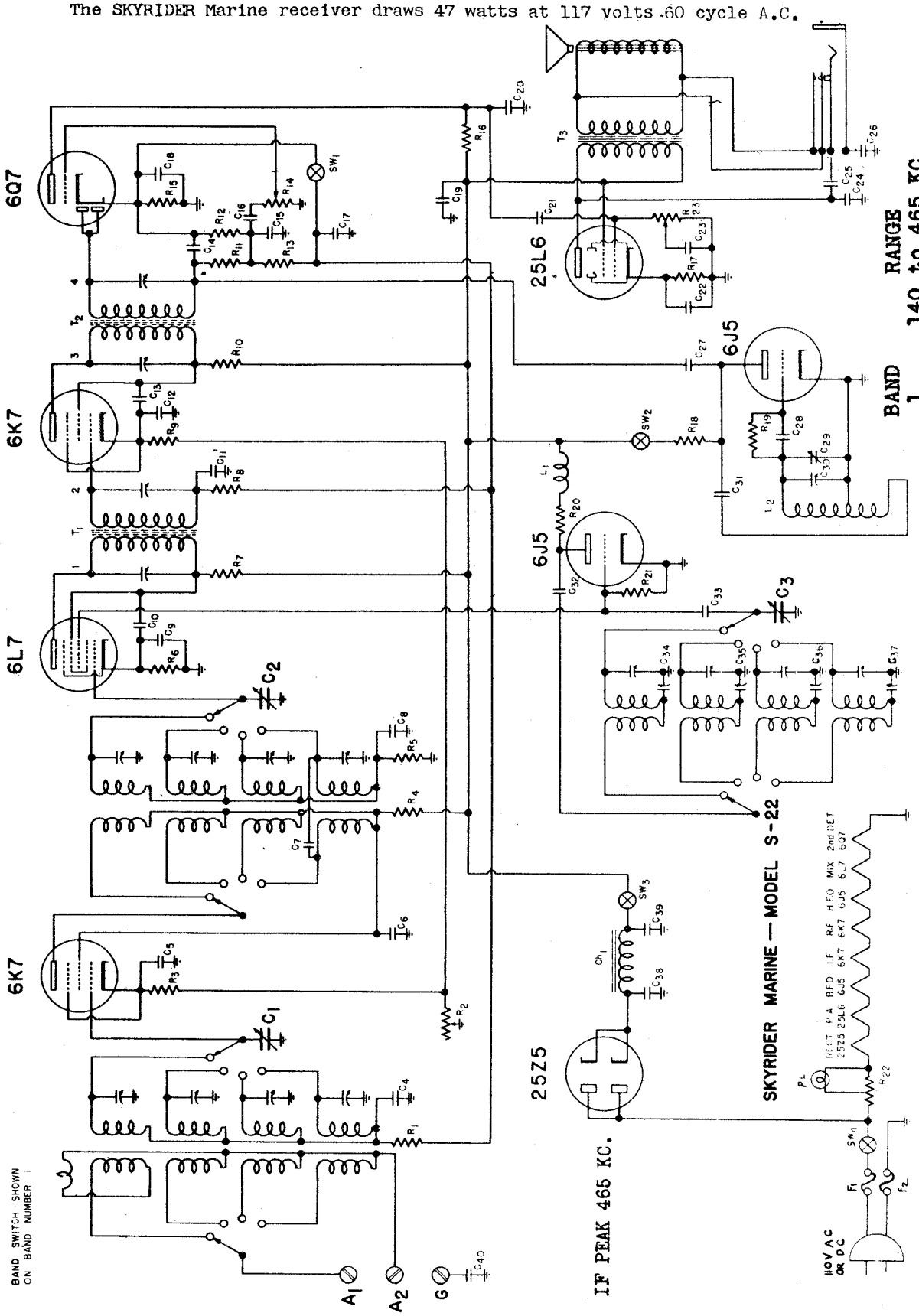

BAND	RANGE
1	140 to 465 KC
2	465 to 1510 KC
3	1.7 to 5.8 MC
4	5.8 to 18.5 MC

In keeping with underwriters recommendations the fuse block is mounted on the under side of the chassis. 250 volt 2 amp renlacement fuses can be installed only after the bottom plate is removed from the receiver.

©John F. Rider, Publisher

MODEL S-22
Skyrider Marine
Alignment, Parts

HALLICRAFTERS, INC

NOTE: Because this receiver can be operated on either 110 volt AC or DC current the chassis is electrically placed above ground. DO NOT ground the receiver at any other point than the G terminal on the rear of the receiver.

ALIGNMENT PROCEDURE FOR SKYRIDER MARINE MODEL S22

Intermediate Frequency Alignment

Have the controls set as follows:-

A.V.C.-B.F.O. switches in the "OFF" position.

Adjust A.F. and R.F. gain controls for maximum volume.

Set Band Switch on #1 Band.

Set main dial at 465 KC or minimum capacity position.

Remove 6L7 grid cap - connect the signal generator through a .1 MFD condenser to the grid of this tube. Connect the ground of the signal generator to the G terminal of the receiver.

The chassis is insulated from the cabinet so do not ground the cabinet.

After the above adjustments have been made, set the signal generator for 1600 KC signal output.

Now adjust the trimmers on T1 and T2 transformers for exact resonance which will be indicated by maximum signal output. If you prefer an output meter as an indicator it should be of the rectifier type and connected to the voice coil leads of the speaker, or to the plate of the 25L6 output tube through suitable coupling condenser.

R.F. Alignment

Replace the .1 MFD condenser in series with the generator leads with a 400 ohm resistor. Connect the generator to the A1 terminal on the strip mounted on the rear of the chassis. Leave the jumper between A2 and G connected. All pad adjustments are for the low frequency ends of the bands and are reached from the top of the chassis. All trimmer adjustments are for the high frequency ends of the bands and are adjusted through the bottom plate. Remove the guarantee card on the bottom of the cabinet by placing a knife under the small snap fasteners which hold it in place.

Band #1

Place the band switch on Band 1. Set generator for 350 KC output and adjust main dial for that frequency. Adjust oscillator trimmer CA, mixer trimmer, CB and antenna CC for maximum signal. Reset generator and receiver to 150 KC and resonate pad C34 for maximum signal.

Band #2

Turn Band Switch to Band 2. Set generator and receiver to 1400 KC and adjust CD CE CF for maximum output. Reset generator and receiver to 600 KC - add adjust Pad C35 for maximum signal.

Band #3

Adjust Band Switch to Band 3. Set generator and receiver to 4 MC and adjust C9 CH C1 for maximum signal. Reset generator and receiver to 1.8 MC and tune pad C36 for maximum output.

Band #4

Set Band Switch on Band 4. Tune generator and receiver to 14 MC and adjust CJ, CK, CL for maximum signal. Reset generator and receiver to 6MC and adjust pad C37 for maximum output.

RESISTORS

NO.	OHMS	WATTAGE	PARTS NO.
R1	100,000	1/3	20-093
2	25,000	R. F. Gain	25-039
3	600	1/3	22-125
4	1,000	1/3	20-033
5	100,000	1/3	20-093
6	200	1/3	20-015
7	1,000	1/3	20-033
8	100,000	1/3	20-093
9	600	1/3	22-125
10	1,000	1/3	20-033
11	100,000	1/3	20-093
12	1,000,000	1/3	20-108
13	1,000,000	1/3	20-108
14	500,000	Audio Gain	25-041
15	7,500	1/3	20-060
16	250,000	1/3	20-099
17	140	1/2	22-011
18	5,000	1/3	20-054
19	50,000	1/3	20-084
20	1,000	1/3	20-033
21	50,000	1/3	20-084
22	94	total - type BK 29B resistor tube	
23	500,000	Tone Control	25-040

CONDENSER

NO.	CAPACITY		TYPE	VOLTAGE	PARTS NO.
C1					
2	408.	mmfd.	Main Gang		48-022
3					
4	.05	mfd.		400	41-005
5	.01	"		400	41-001

CONDENSER - Continued

NO.	CAPACITY		TYPE	VOLTAGE	PARTS NO.
C6	.01	mfd.		400	41-001
7	10	mmfd.	ceramic		40-021
8	.01	mfd.		"	41-001
9	.01	"		"	41-001
10	.01	"		"	41-001
11	.01	"		"	41-001
12	.02	"		"	41-003
13	.01	"		"	41-001
14	.0001	"	mica		40-007
15	.0001	"	"		40-007
16	.05	"		"	41-005
17	.01	"		"	41-001
18	20.	"	electrolytic	25	42-025
19	.1	"		400	41-007
20	.00025	"	mica		40-024
21	.05	"		"	41-005
22	20.	"	electrolytic	25	42-025
23	.005	"		600	40-020
24	.005	"		"	40-020
25	.01	"		400	41-001
26	.01	"		"	41-001
27	10.	mmfd.	ceramic		40-021
28	.00025	mfd.	mica		40-024
29	.0003	"	in pitch control		
30	.00025		pitch control		48-021
31	.01			"	41-001
32	.002		mica		40-013
33	.0001		"		40-007
34	50.	mmfd.	Pad.		44-027
35	100.	"	"		44-026
36	375.	"	"		44-027
37	1,080.	"	"		44-026
38	40	mfd.		150	42-026
39	40	"		"	42-026
40	.01	"		400	41-001

©John F. Rider, Publisher

©John F. Rider, Publisher

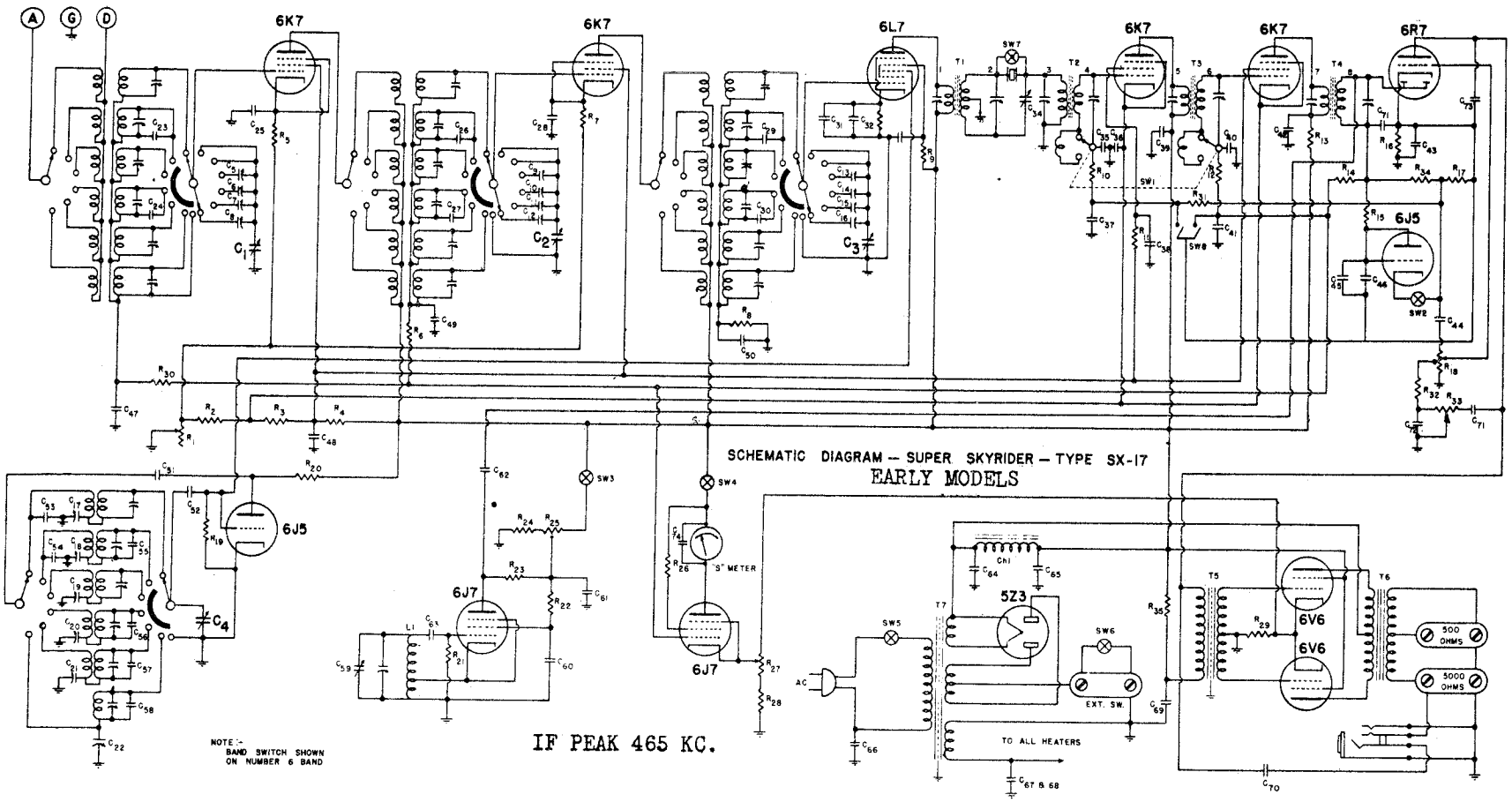

SCHEMATIC DIAGRAM — SUPER SKYRIDER — TYPE SX-17
EARLY MODELS

IF PEAK 465 KC.

This unit has been constructed on special order. In outward appearance it is identical to the SX-16 Model. The differences in the two receivers consists of a second R.F. stage and a noise silencer. These additions make the total number of tubes in the receiver 13.

FOR ALIGNMENT SEE S-17 , SX-17 LATE MODELS

CHANGES FOUND IN SOME EARLY MODELS WHICH PRECEDE THE SX-17 LATE MODELS.

R14- 1 meg.	R17- 250 ohms.	C44-.05 mfd. 200v.
R15- 1meg.	R34- 100M ohms.	C45- .1 mfd. 200v.
R16- 950 ohms.	C43- 10 mfd. 25v.	C46-.002 mfd. mica.

NOISE SILENCER LEADS AS SHORT AS POSSIBLE FOR BEST RESULTS.

MODELS S-17,SX-17 Late
Super Skyrider
Schematic,Changes

HALLICRAFTERS, INC.

BAND 1. 545 KC to 1,555 KC
2. 1,545 KC to 4,300 KC
3. 4.2 MC to 10.2 MC
4. 9.8 MC to 20.5 MC
5. 19.00 MC to 36.00 MC
6. 35.00 MC to 62.00 MC

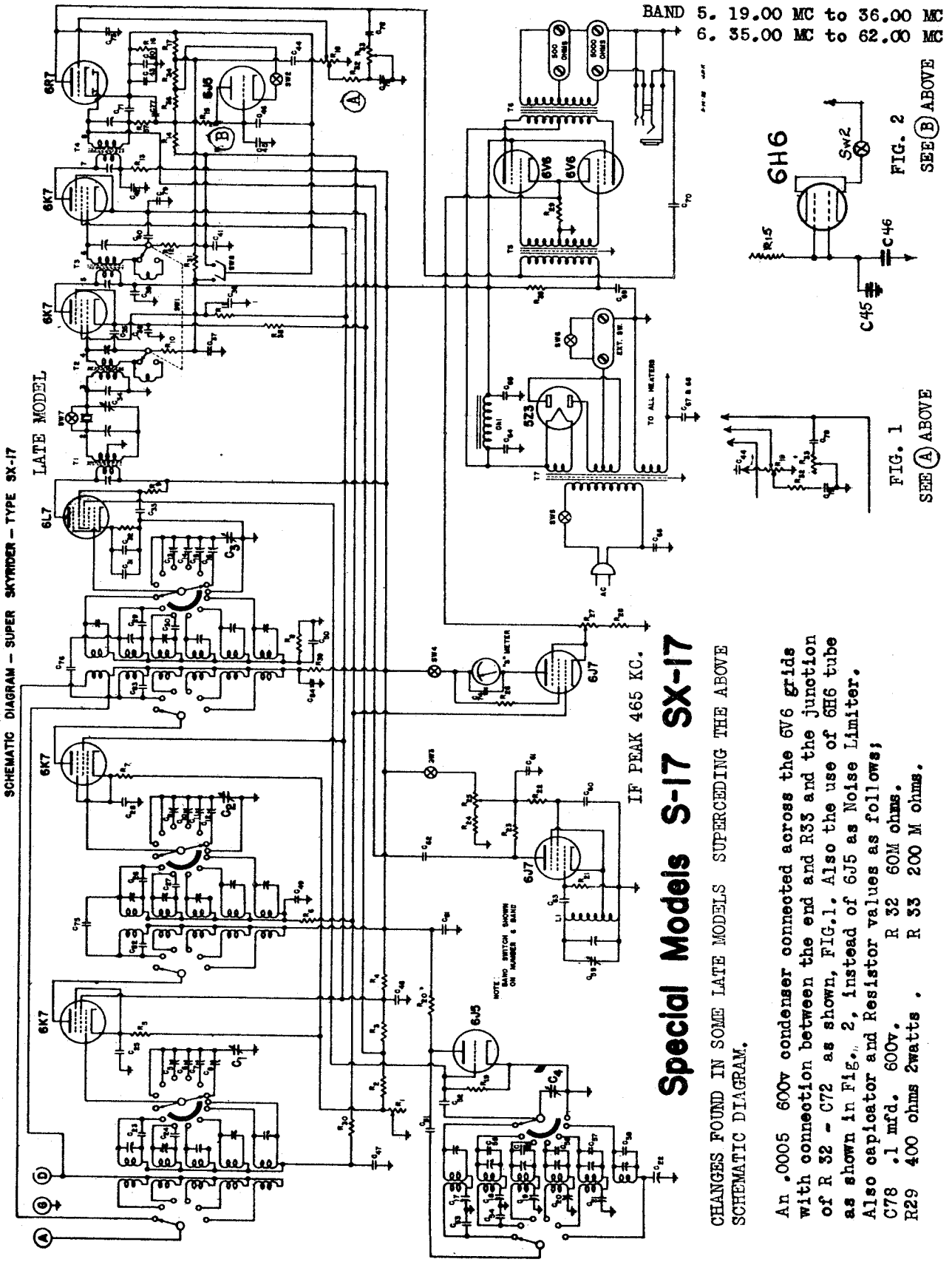

Special Models S-17 SX-17

IF PEAK 465 KC.

CHANGES FOUND IN SOME LATE MODELS SUPERCEDING THE ABOVE SCHEMATIC DIAGRAM.

An .0005 600v condenser connected across the 6V6 grids with connection between the end and R33 and the junction of R 32 - C72 as shown, FIG.1. Also the use of 6H6 tube as shown in Fig. 2, instead of 6J5 as Noise Limiter.
Also capacator and Resistor values as follows;
C78 .1 mfd. 600v. R 32 60M ohms.
R29 400 ohms 2watts . R 33 200 M ohms.

©John F. Rider, Publisher

©John F. Rider, Publisher

Alignment Procedure for SPECIAL Super Skyrider Models S-17, SX17

The following measurements made with 1000 ohms per volt meter and taken from the point indicated to ground. Antenna and Ground disconnected and R. F. and A. F. Gain controls set at maximum. Line voltage of 115 at the time measurements were taken. Normal tolerance allows variation of plus or minus 10% from the indicated values. "DL" means Dead Lug but will indicate voltage when used as a tie.

Tube	Function	1	2	3	4	5	6	7	8
6K7	RF Amp (1)			260	100	8	0 ON 50 OFF	6.3	8
6K7	RF Amp (2)			260	100	8	0 ON 50 OFF	6.3	8
6L7	Mixer			260	85	-13	DL	6.3	2.5
6J5G	Osc			175	DL	-13	DL	6.3	0
6K7	IF Amp (1)			260	100	11	100	6.3	10
6K7	IF Amp (2)			260	100	10	.5 ON 50 OFF	6.3	10
6R7G	2nd Det A.V.C.			175	1	1	0	6.3	-7
6V6G	1st Audio Output			300	250	0	DL	6.3	16
6V6G	Output			300	250	0	DL	6.3	16
6J7	Beat Osc.	(TUBE OUT)		250	240	0	DL 260	6.3	0
6J7G	Meter Amp			260	120	10	250	6.3	10
6J5	Silencer	(ON)		-2	-2	-2	-3.5	6.3	-2

Intermediate Frequency Alignment (465 KC)

Have the controls set in the following positions:

Noise Silencer "OFF" (switch to the left)
B.F.O. Injector "OFF"
A.F. and R.F. gain controls on full.
Selectivity switch on "SHARP" position.
Crystal phasing condenser midway (pointer straight up).
A.V.C. switch "OFF".
Crystal switch "IN".
Band switch on #1 Band - Tuning gang open.
Remove oscillator tube.
Remove 6L7 grid cap.

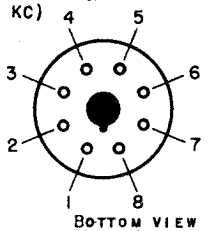

Bottom View of Socket

Connect Signal Generator to grid of 6L7 tube through a .1 mfd condenser. Tune Signal Generator to 465 KC and then adjust the following trimmers for maximum output: T-4-#7,8; T3-#5,6; T2-#3,4; T1-#1,2; throw crystal switch to out position and readjust trimmers #2, 3 for maximum output. When the "Selectivity" switch is snapped into the "Broad" position a slight drop in gain should be indicated. A rectifier type output meter is suggested as an output indicator.

Alignment using a 465 KC crystal

Should the receiver be a crystal model it is necessary that the crystal be used in an external oscillator in place of a signal generator such as the above. The output of this crystal-controlled oscillator is then fed to the grid of the 6L7 tube and the above procedure followed. When the I F amplifier has been aligned from the crystal oscillators output, re-inserting the crystal in the receiver will show very little difference in output whether the crystal is "IN" or "OUT" of the circuit as indicated by the crystal switch.

R. F. Alignment Procedure

On Band #1, or Broadcast, use a .0002 mfd condenser in series with the output lead from generator to receiver. On the other bands use a 400 ohm resistor. Be sure jumper from doublet post to Gnd. remains connected when aligning the receiver.
All PAD adjustments (located on the top of the chassis) are for the low frequency ends of the bands.
All TRIMMER adjustments (located on the bottom of the chassis) are for the high frequency ends of the bands.
Reduce the R.F. gain control below the point of blocking or overloading; Also be sure that the Crystal switch is in the "OUT" position as well as the A.V.C. switch in the "OFF" position.
<u>Be sure to check images</u> - Images will fall a little less than 1,000 kc lower in frequency than the fundamental or harmonic of the signal from the generator. Because of the two RF stages images will be greatly attenuated in comparison to a unit with one stage of RF.
The tuning gang must be rocked when making these adjustments.

Note#1 Harmonics of suitable frequencies may be used if the following suggested frequencies are not available.

" 2 It is necessary to repeat each pair of operations several times until no change is noted.

" 3 Great care should be exercised in aligning and accurately resonating each circuit in the SPECIAL Super Skyrider; otherwise your errors will be cumulative and the set will function poorly.

Crystal Operation

To properly adjust the crystal circuit for best performance the following procedure should be carefully followed:

Have the AVC switch in the "OFF" position. Tune in some station transmitting continuously. Be very careful to get the signal right on the nose. After you are sure that you have the signal resonated perfectly, operate the "BFO INJECTOR" control and leave the pointer of that knob in a vertical position. You should hear a whistle, or beat note. After the BFO is on rotation of the "PITCH CONTROL" will change the tone of the beat note. Proper operation of this control will be indicated by hearing the signal twice in one complete rotation of the knob; there being two positions at which no signal, or whistle, will be heard. These two positions are known as the "ZERO BEAT" positions.

Now snap the "CRYSTAL" switch to the "ON" position. You will notice a reduction in noise. Carefully retune the signal using the BAND SPREAD dial. Notice how sharply the signal peaks. Now tune through the signal and find which side of the signal is the weaker. Tune in the weaker side and then carefully adjust the "CRYSTAL PHASING" control until the signal is inaudible. Going back to the other side of the signal should find no change in its original volume, and knife-like selectivity resulting. Use whichever side of zero-beat adjustment of the "PITCH CONTROL", in conjunction with critical adjustment of the "PHASING CONTROL" gives the greater rejection of the interfering signal.

NOTE*** The PHASING control affects the sensitivity and selectivity of the receiver whether the crystal is in the circuit or not.

SUPER-SKYRIDER MODELS S-17, SX-17

No.	Capacity	Type	Voltage	Parts No.
C1		MAIN		
2	420 MMFD			48-018
3				
4		GANG		
5	100 "	PAD		44-019
6	100 "	"		
7	310 "	"		
8	880 "	"		44-020
9	1,400 "	"		
10	590 "	"		44-018
11	1,000 "	"		
12	350 "	"		44-017
13	1,400 "	"		
14	590 "	"		44-018
15	1,000 "	"		
16	350 "	"		44-017
17	180 "	"		
18	120 "	"		44-016
19	1,000 "	"		
20	350 "	"		44-017
21	180 "	"		
22	120 "	"		44-016
23	10 "	MICA		40-021
24	10 "	"		40-021
25	.002 MFD	"		40-013
26	10 MMFD	"		40-021
27	10 "	"		40-021
28	.002 MFD	"		40-013
29	10 MMFD	"		40-021
30	10 "	"		40-021
31	.002 MFD	"		40-013
32	.05 "		400	41-005
33	.05 "		600	45-007
34	25 MMFD	AIR		48-012
35	.05 MFD		400	41-005
36	.05 "		400	41-005
37	.05 "		400	41-005
38	.1 "		600	45-008
39	.25 "		600	45-009
40	.05 "		400	41-005
41	.05 "		400	41-005
42	.1 "		600	45-008
43	10. "		25	42-002
C44	.05 MFD		400	41-005
45	.002 "	MICA		40-013
46	.1 "		400	41-007
47	.05 "		400	41-005
48	.1 "		600	45-008
49	.05 "		400	41-005
50	.05 "		400	41-005
51	.002 "	"		40-013
52	100 MMFD	"		40-007
53	50 "	"		40-002
54	50 "	"		40-002
55	10 "	"		40-021
56	15 "	"		40-022
57	15 "	"		40-022
58	25 "	"		40-024
59	25 "	AIR		48-012

No.	Capacity	Type	Voltage	Parts No.
60	.01 MFD		600	45-002
61	.01 "		600	45-002
62	10 MMFD	MICA		40-021
63	.00025 MFD	"		40-024
64	16 "		400	42-019
65	16 "		400	42-019
66	.01 "		600	45-002
67	.002 "	"		40-013
68	.002 "	"		40-013
69	1. "		400	41-013
70	.01 "		600	45-002
71	.0001 "	"		40-003
72	.005 "		600	45-009
73	.0005 "	"		43-008
74	.005 "	"		40-019
75	10 MMFD	"		40-021
76	10 "	"		40-021
77	50 "	"		40-002
78	.02 MFD		600	45-010
79	.05 "		400	41-005
80	.1 "		400	41-007
81	.002 "	"		40-013
82	10 MMFD	"		40-021
83	10 "	"		40-021
84	.05 MFD		600	45-007
85	10 MMFD	"		40-021

LIST OF RESISTORS

No.	Ohms	Wattage	Parts No.
R 1	5,000	R. F. GAIN	25-021
2	500	1/3	24-040
3	10,000	2.5	24-037
4	10,000	2.5	24-037
5	700	1/3	24-038
6	100,000	"	20-093
7	700	"	24-038
8	100,000	"	20-093
9	30,000	1.	22-075
10	100,000	1/3	20-093
11	1,000	"	20-033
12	100,000	"	20-093
13	1,000	"	20-033
14	1,000,000	"	20-108
15	1,000,000	"	20-108
16	950	"	22-032
17	250,000	"	20-099
18	1,000,000	A. F. GAIN	25-023
19	50,000	1/3	20-084
20	10,000	1.	20-061
21	100,000	1/3	20-093
22	100,000	"	20-093
23	50,000	"	20-084
24	50,000	"	20-084
25	500,000	BFO CONTROL	25-024
26	100,000	1/3	20-093
27	500	METER ADJ.	25-022
28	95	1/2	22-007
29	250	1.	20-099
30	100,000	1/3	20-093
31	1,000,000	"	20-108

No.	Ohms	Wattage	Parts No.
32	20,000	"	20-072
33	1,000,000	TONE CONTROL	25-013
34	100,000	1/3	20-093
35	10,000	"	20-063
36	100,000	"	20-093
37	20,000	"	20-072
38	150	"	22-011
39	1,000	"	20-033

Opr.	Band	Receiver Dial Setting	Signal Generator Frequency	Adjust Osc. with	Trimmers Adj. for Max Gain	Adjust Osc. with	Padders Adj. for Max Gain
1	1	600Kc	600Kc	------	--------	C22	--------
2	1	1400Kc	1400Kc	CA	CB Cc CD	------	--------
3	2	1800Kc	1800Kc	------	--------	C21	--------
4	2	4000Kc	4000Kc	CE	CF Cg CH	------	--------
5	3	5000Kc	5000Kc	------	--------	C19	C5 C9 C13
6	3	9000Kc	9000Kc	CI	CJ CK CL	------	--------
7	4	10,000Kc	10,000Kc	------	--------	C20	C6 C10 C14
8	4	18,000Kc	18,000Kc	CM	CN Co CP	------	--------
9	5	20,000Kc	10,000Kc	------	--------	C18	C7 C11 C15
10	5	30,000Kc	10,000Kc	CQ	CR Cs CT	------	--------
11	6	40,000Kc	20,000Kc	------	--------	C17	C16
12	6	60,000Kc	20,000Kc	Cu	Cv	------	--------

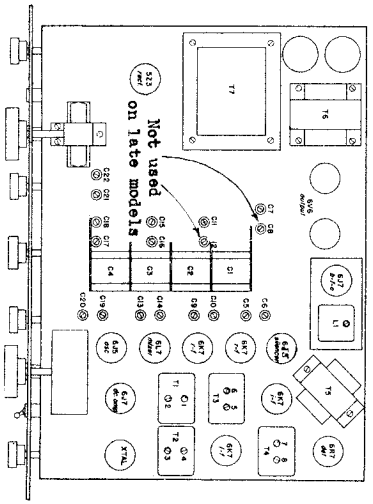

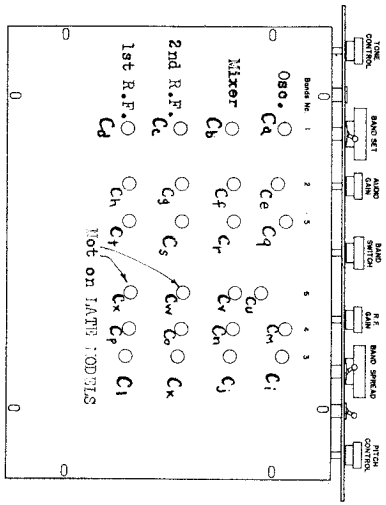

SWITCHES

S 1 SELECTIVITY DPDT
2 NOISE SILENCER SPST
3 BFO (MOUNTED ON CONTROL)
4 "S" METER (MOUNTED ON R.F. GAIN CONTROL)
5 A.C. OFF AND ON (MOUNTED ON TONE CONTROL)
6 SEND RECEIVE SPST
7 CRYSTAL SPST
8 AVC DPST

©John F. Rider, Publisher

HALSON RADIO & TELEV., INC.

MODEL A-5
MODELS C-6,163
Schematics, Socket Trimmers, Alignment

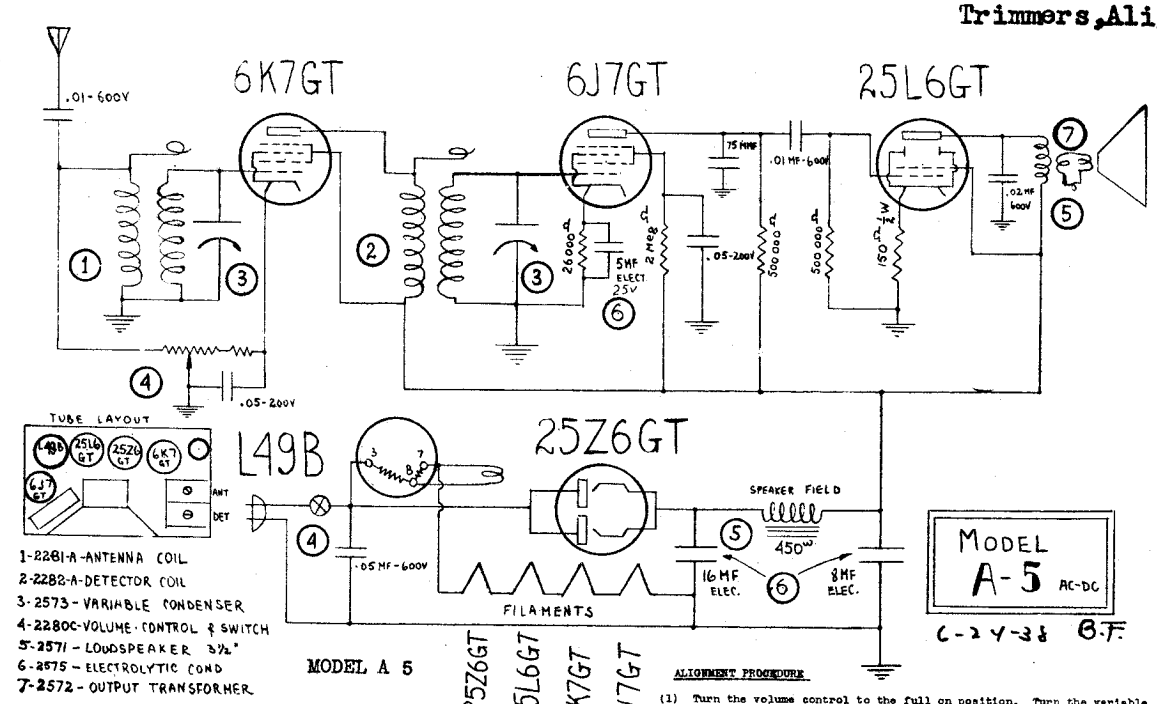

1-2281-A-ANTENNA COIL
2-2282-A-DETECTOR COIL
3-2573-VARIABLE CONDENSER
4-2280C-VOLUME CONTROL & SWITCH
5-2571-LOUDSPEAKER 5½"
6-2575-ELECTROLYTIC COND
7-2572-OUTPUT TRANSFORMER

MODEL A 5

25Z6GT 25L6GT 6K7GT 6J7GT

Five Tube Tuned Radio Frequency, Broadcast and Police Receiver

LINE VOLTAGE 120 Volts AC or DC, Alternating or Direct Current.

TUNING RANGE 545 Kilocycles (540 meters) to 1720 Kilocycles (175 meters).

TUBES Five tubes as follows: 6K7GT, 6J7GT, 25L6GT, 25Z6GT, L49B.

ALIGNMENT PROCEDURE

(1) Turn the volume control to the full on position. Turn the variable condenser clockwise direction till it stops. Adjust detector trimmer to 1720 kilocycle signal, by connecting service oscillator to antenna coil through 75 MMF condenser, until the signal is heard.

(2) Feed the 1500 kilocycle signal and turn the variable counterclockwise until the peak of this signal is reached. Adjust the antenna trimmer for maximum response.

DO NOT USE GROUND ON THIS SET.

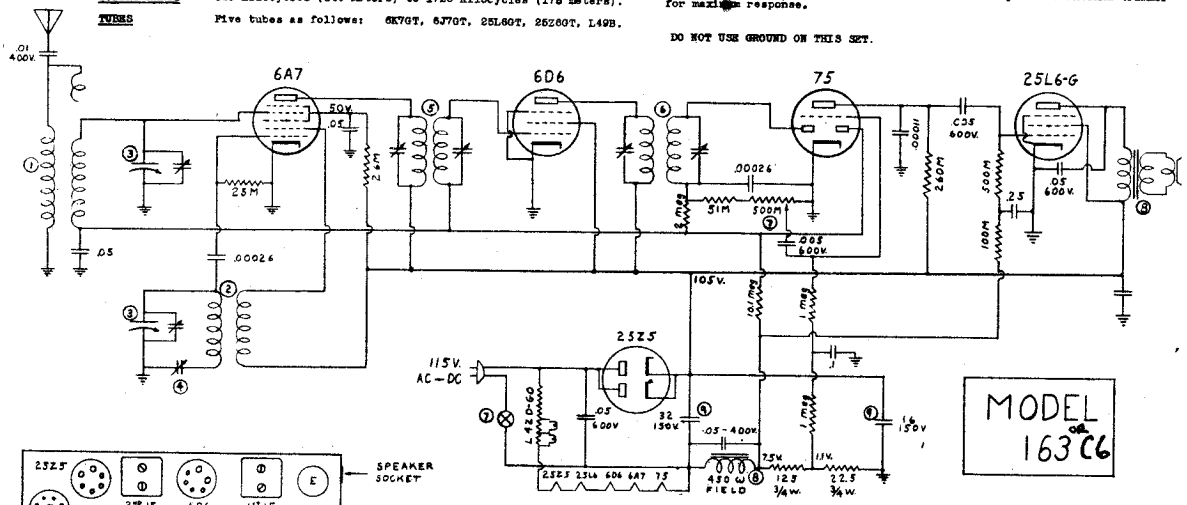

MODEL 163 or C6

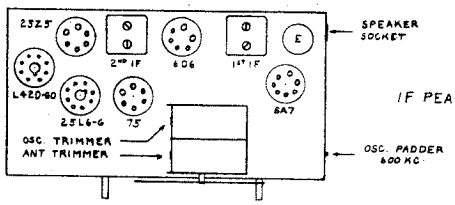

TUBE LAYOUT & TRIMMER LOCATION

IF PEAK - 456 KC

ALL RESISTORS ARE ½ WATT AND ALL CONDENSERS ARE 200 VOLTS UNLESS OTHERWISE MARKED.
ALL VOLTAGES MEASURED TO CHASSIS.

10-22-37 E.

PARTS LIST

1 -	2387-1	ANTENNA COIL
2 -	2388-2	OSCILLATOR COIL
3 -	2422-2	VARIABLE CONDENSER
4 -	1621-1	OSCILLATOR PADDER CONDENSER
5 -	2389-A	1ST IF TRANSFORMER
6 -	2390-B	2ND IF TRANSFORMER
7 -	1845-A	VOLUME CONTROL & SWITCH
8 -	2366-1	SPEAKER ASSEMBLY
9 -	2444-A	ELECTROLYTIC CONDENSER

Six Tube Superheterodyne, Broadcast And Police Receiver

INSTRUCTION SHEET — SERVICE DATA

LINE VOLTAGE 110 to 120 Volts, A C or D C, Alternating or Direct Current.

TUNING RANGES Broadcast Band-545 Kilocycles (540 Meters) to 1550 Kilocycles (195 Meters).
Police Band- State and Municipal Police - 1600 Kilocycles (190 Meters) to 1750 Kilocycles (170 Meters)

TUBES Six tubes as follows: 6A7, 6D6, 75, 25L6-G, 25Z5 and a L42D-60.

ALIGNMENT PROCEDURE

1) Turn the volume control to the full on position and tune the receiver at the high frequency end of the band so that no signal is received. Connect the service oscillator output through a .1 mfd. isolating condenser to the top grid cap of the 6A7 tube and set to 456 kilocycles. Adjust the intermediate frequency trimmers for the maximum response. As the set is brought into line and the signal becomes stronger, attenuate the service oscillator

2) Set the dial pointer to the 1500 kilocycle calibration. Feed a 1500 kilocycle signal from the service oscillator through a .00015 condenser to the antenna. Adjust the oscillator trimmer until the signal is heard, then adjust the antenna trimmer for maximum response.

3) Set the service oscillator to 600 kilocycles and adjust the oscillator padder for maximum response by simultaneously adjusting the padder and rocking the tuning control.

4) Repeat the procedure of numbers 2 and 3 for greater accuracy.

©John F. Rider, Publisher

MODEL 10
Schematic, Socket
Trimmers, Alignment
Parts

HALSON RADIO & TELEV., INC.

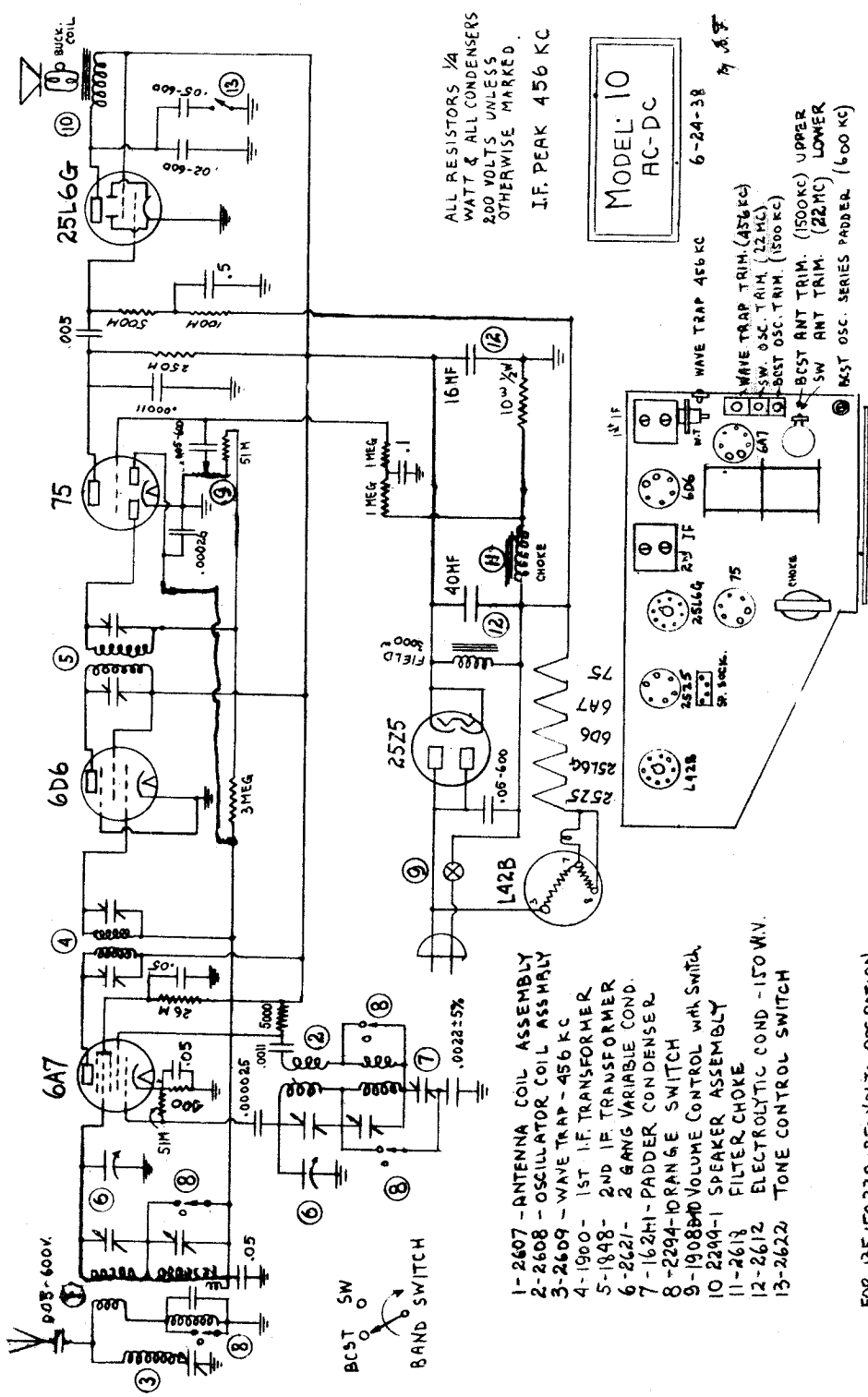

INSTRUCTION SHEET — SERVICE DATA

Six Tube Superheterodyne, Broadcast and Foreign Short Wave

LINE VOLTAGE — 110 to 120 Volts, AC or DC, Alternating or Direct Current.

TUNING RANGES — Broadcast and State Police Band - 545 KC (540 meters) to 1750 KC (meters)
Short Wave, Foreign Broadcast - 7.5 MC (40 meters) to 25 MC (12 meters).

MINOR REASONS FOR FAILURE TO FUNCTION - Defective tubes, grid caps off, volume control not fully turned on, line plug reversed on DC, tubes not in their proper sockets, shorted aerial defective plug or wiring loose in socket.

ALIGNMENT PROCEDURE -

(1) Set service oscillator to 456 KC and connect the output lead to the top grid of 6A7. Adjust the I.F. trimmers for maximum response.

(2) Connect oscillator set at 456 KC to the antenna lead through a .0002 MFD condenser and switch in the broadcast position, and adjust the wave trap for minimum response.

(3) Set oscillator for 22 MC, band switch in the short wave position, dial pointer set for 22 MC calibration, and adjust the short wave oscillator trimmer until the signal is heard.

(4) Turn the band switch to the broadcast position, set dial to 1500 KC calibration and feed a 1500 KC signal from the oscillator through the antenna. Adjust the broadcast oscillator trimmer until the signal is heard, then adjust the broadcast antenna trimmer for maximum response.

(5) Set the test oscillator to 600 KC and adjust the broadcast osc. series padder for maximum response by simultaneously adjusting the padder and rocking the tuning dial.

(6) Repeat procedure numbers 4 and 5 for greater accuracy.

(7) Turn the set to the S.W. Band, set the test oscillator to 22 MC, tune in signal with the set and adjust the S.W. antenna trimmer for maximum response. Use 400 ohm dummy antenna.

©John F. Rider, Publisher

©John F. Rider, Publisher

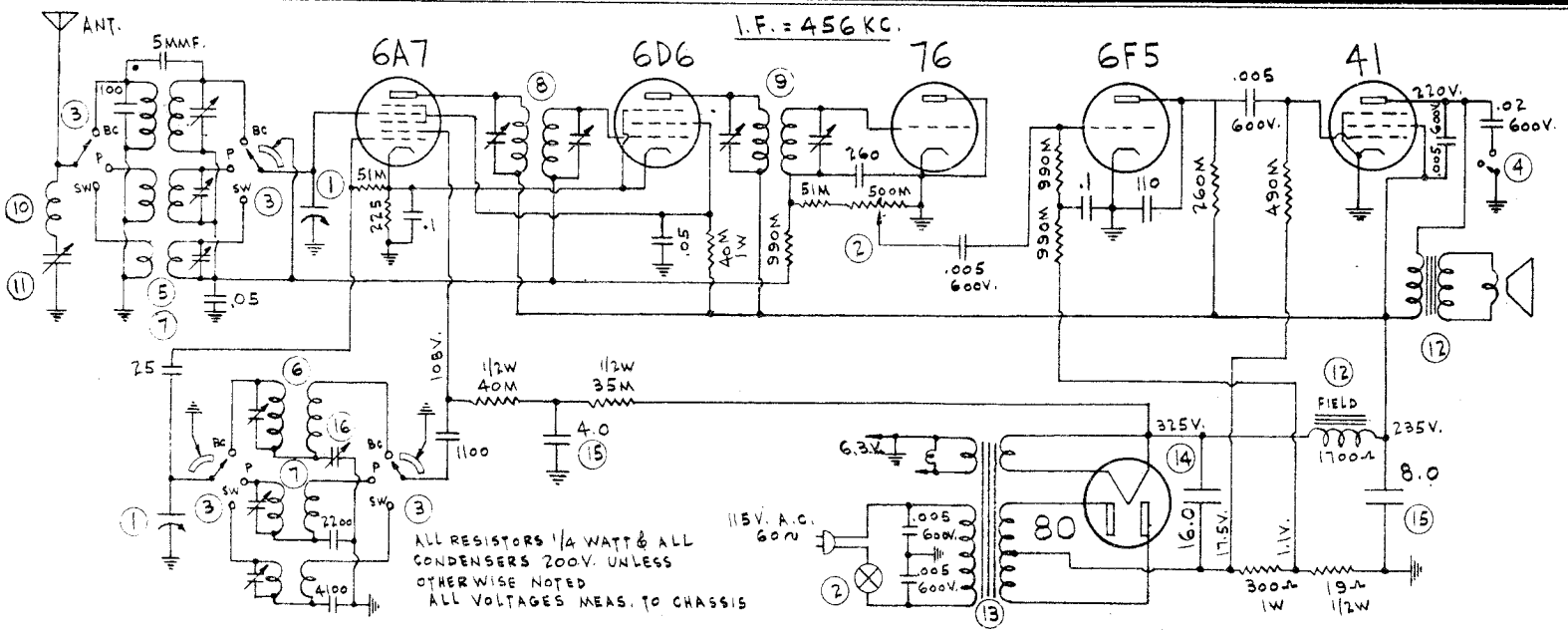

MODEL 20

1 = 2468 - VARIABLE CONDENSER 495 MMFD.
2 = 1508E - VOLUME CONTROL & SWITCH
3 = 2345A - RANGE SWITCH
4 = 1435C - TONE CONTROL SWITCH
5 = 2468 - ANTENNA COIL ASSEMBLY
6 = 2469 - OSCILLATOR " "
7 = 2490 - ANT.-OSC. " " (POLICE BAND)
8 = 1900L - I.F. TRANSFORMER - 1ST - 456 K.C.
9 = 1848P - " " - 2ND - "
10 = 2297-1 - WAVE TRAP COIL - 456 KC.
11 = 2337-1 - " " TRIMMER
12 = 2272-1 - SPEAKER ASSEMBLY
13 = 2311 - POWER TRANSFORMER - 115V.-60~
14 = 2353 - ELECT. COND. (WET) 16MFD. 450V.
15 = 2308-2 - " " 8-4 MFD. 350V.
16 = 1621-1 - PADDER COND. 200-685 MMFD.

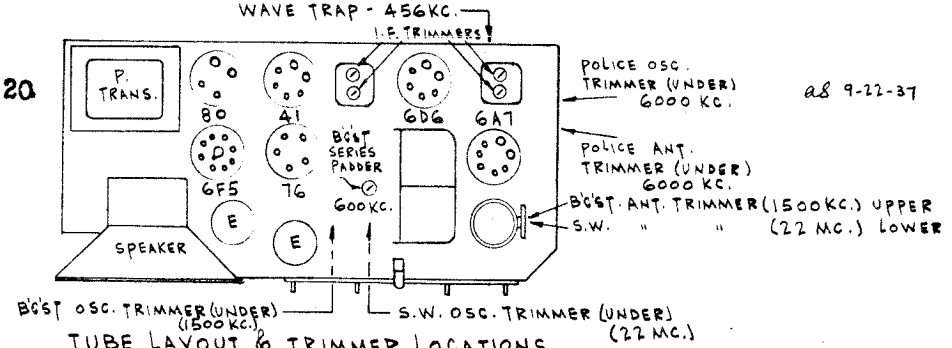

as 9-22-37

TUBE LAYOUT & TRIMMER LOCATIONS

LINE VOLTAGE 110 to 120 volts Alternating Current, 60 Cycles

TUNING RANGES Broadcast - 540 KC (555 meters) to 1725 KC (174 meters)
Police - 2.3 MC (130 meters) to 7.9 MC (38 meters)
Foreign Short Wave - 7.4 MC (40 meters) to 25 MC (12 meters)

ALIGNMENT PROCEDURE

(1) Set service oscillator to 456 kc and connect the output lead to the top grid of 6A7. Adjust trimmers for maximum response.

(2) Connect oscillator set at 456 kc to the antenna lead through a .0002 mfd. condenser; variable condenser closed, and adjust wave trap trimmer for minimum response. Band switch to be in broadcast position.

(3) Turn band selector to the short wave band, set the test oscillator to 22 mc and connect to antenna lead through 400 ohm dummy antenna. Set dial pointer to 22 mc and adjust short wave oscillator trimmer until signal is heard. Then adjust short wave antenna trimmer for maximum response.

(4) Turn band selector to police band, set test oscillator to 6000 kc, connect to antenna lead through 400 ohm dummy antenna. Set dial pointer to 6000 kc and adjust police oscillator trimmer until signal is heard. Then adjust broadcast antenna trimmer for maximum response.

(5) Turn band selector to broadcast band, set test oscillator to 1500 kc, connect to antenna lead through a .0002 mfd. condenser. Set dial at 1500 kc and adjust broadcast oscillator trimmer until signal is heard. Then adjust broadcast antenna trimmer for maximum response.

(6) With band selector in broadcast position, set test oscillator to 600 kc and adjust broadcast oscillator series padder for maximum response by simultaneously adjusting the padder and rocking the tuning dial.

(7) Repeat procedures 5 and 6 for greater accuracy.

MODEL 30
Schematic, Socket Trimmers, Alignment, Parts

HALSON RADIO & TELEV., INC.

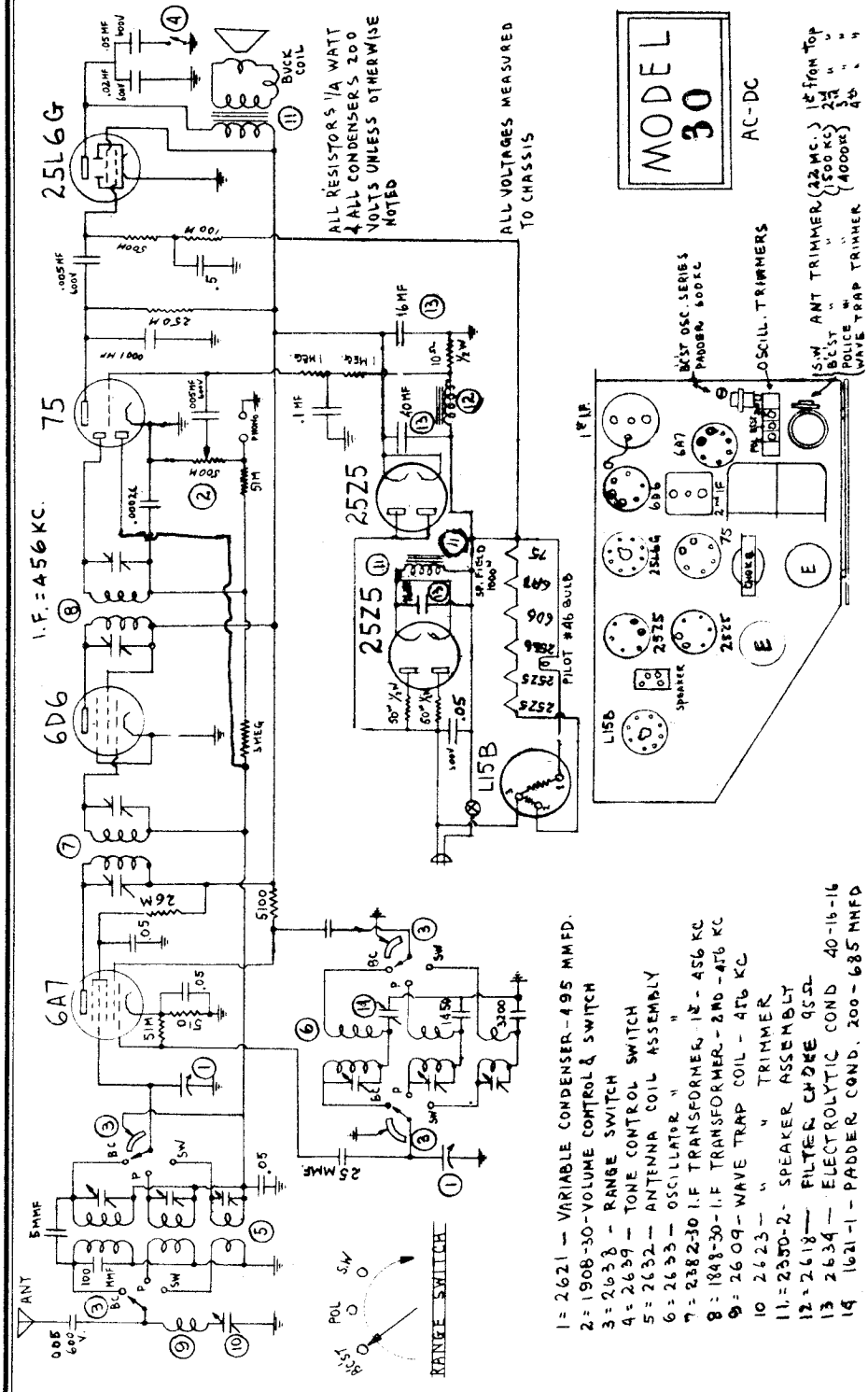

1 = 2621 — VARIABLE CONDENSER - 495 MMFD.
2 = 1908-30 - VOLUME CONTROL & SWITCH
3 = 2638 — RANGE SWITCH
4 = 2639 — TONE CONTROL SWITCH
5 = 2632 — ANTENNA COIL ASSEMBLY
6 = 2633 — OSCILLATOR "
7 = 2382-30 I.F. TRANSFORMER, 1st - 456 KC
8 = 1848-30 - I.F. TRANSFORMER - 2nd - 456 KC
9 = 2609 - WAVE TRAP COIL - 456 KC
10 = 2623 — " " TRIMMER
11 = 2350-2 - SPEAKER ASSEMBLY
12 = 2618 — FILTER CHOKE 95Ω
13 = 2634 — ELECTROLYTIC COND. 40-16-16
14 = 1621-1 - PADDER COND. 200 - 685 MMFD

FOR 135V, 150V, 220V & 250V OPERATION USE L15 BX BALLAST TUBE

TUBE LAYOUT & TRIMMER LOCATION

6-28-38

INSTRUCTION SHEET — SERVICE DATA

Seven Tube Superheterodyne Broadcast, Police & Foreign Short Wave

LINE VOLTAGE — 110 to 120 Volts AC or DC, Alternating or Direct Current

TUNING RANGES — Broadcast - 540 KC (555 meters) to 1735 KC (173 meters).
Police - 2.3 MC (130 meters) to 7.5 MC (40 meters).
Foreign Short Wave - 7.5 (40 meters) to 24 MC. (13 meters).

MINOR REASONS FOR FAILURE TO FUNCTION - Defective tube, grid caps off, volume control not fully turn on, line plug reversed on DC, tube not in their proper sockets, shorted antenna, defective plug or wiring loose in sockets.

ALIGNMENT PROCEDURE

(1) Set service oscillator to 456 Kc. and connect the output lead to the top grid of 6A7. Adjust trimmers for maximum response.

(2) Connect oscillator set at 456 kc. to the antenna lead through a .0002 mfd. condenser; band switch in the broadcast position, variable condenser closed, and adjust wave trap trimmer for minimum response.

(3) Turn the band selector to the short wave band, set the test oscillator to 22 mc. connect to antenna lead through 400 ohm dummy antenna, set dial pointer to 22mc. and adjust short wave oscillator trimmer for maximum response.

(4) Turn band selector to police band, set test oscillator to 6 mc., connect to antenna lead through 400 ohm dummy antenna. Set dial pointer to 6 mc. and adjust police oscillator trimmer until signal is heard. Then adjust police antenna trimmer for maximum response.

(5) Turn band selector to broadcast band, set test oscillator to 1500 kc, connect to antenna lead through a .0002 mfd. condenser. Set dial pointer at 1500 kc and adjust broadcast oscillator trimmer until signal is heard. Then adjust broadcast antenna trimmer for maximum response.

(6) With band selector in broadcast position, set test oscillator to 600 kc and adjust broadcast oscillator series padder for maximum response by simultaneously adjusting the padder and rocking the tuning dial.

(7) Repeat procedures 5 and 6 for greater accuracy.

©John F. Rider, Publisher

HALSON RADIO & TELEV.,INC.

MODEL 412
Schematic, Socket Trimmers, Alignment Parts

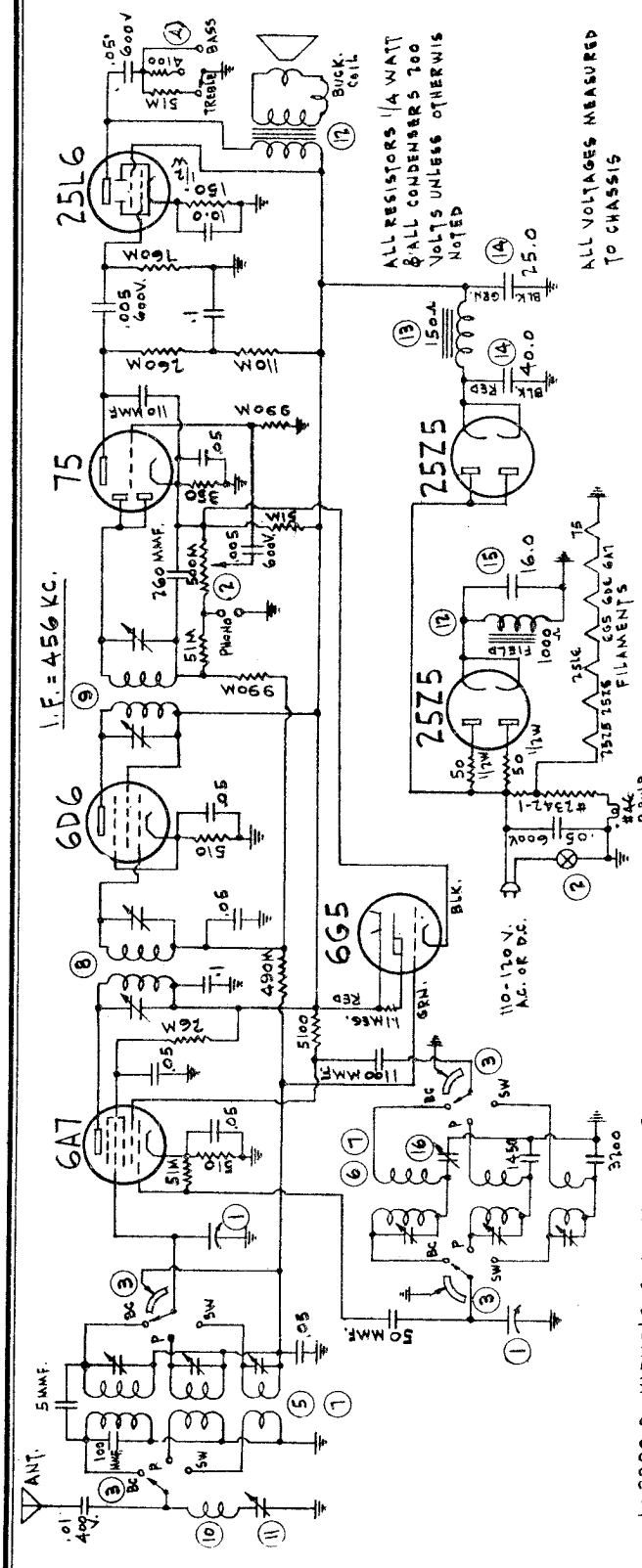

1 = 2290-3 - VARIABLE CONDENSER - 495 MMFD.
2 = 1908D-2 - VOLUME CONTROL & SWITCH
3 = 2345 - RANGE SWITCH
4 = 2187 - TONE CONTROL SWITCH
5 = 2347 - ANTENNA COIL ASSEMBLY
6 = 2348 - OSCILLATOR " "
7 = 2349 - ANT. - OSC. " " (POLICE BAND)
8 = 2382-1 - I.F. TRANSFORMER - 1ST - 456 KC.
9 = 1848L - " " - 2ND - " "
10 = 2297-1 - WAVE TRAP COIL - 456 KC.
11 = 2331-1 - " " TRIMMER
12 = 2350-2 - SPEAKER ASSEMBLY
13 = 2301 - FILTER CHOKE - 150Ω
14 = 2302 - ELECT. COND. - 40-25 MFD. - 150V.
15 = 2357 - " " " (WET) 16 MFD. - 150V.
16 = 1621-1 - PADDER COND. 200 - 685 MMFD.

Eight Tube Superheterodyne Broadcast, Police & Foreign Short Wave

LINE VOLTAGE 110 to 120 Volts AC or DC, Alternating or Direct Current

TUNING RANGES
Broadcast - 540 KC (555 meters) to 1735 KC (173 meters)
Police - 1.6 MC (180 meters) to 5.8 MC (52 meters)
Foreign Short Wave - 5.6 MC. (53 meters) to 19 MC. (16 meters)

ALIGNMENT PROCEDURE

(1) **Set service oscillator to 456 kc. and connect the output lead to the top grid of 6A7. Adjust trimmers for maximum response.**

(2) **Connect oscillator set at 456kc to the antenna lead through a .0002 mfd condenser; band switch in the broadcast position, variable condenser closed, and adjust wave trap trimmer for minimum response.**

(3) **Turn the band selector to the short wave band, set the test oscillator to 16 mc, connect to antenna lead through 400 ohm dummy antenna, set dial pointer to 16mc and adjust short wave oscillator trimmer until signal is heard. Then adjust short wave antenna trimmer for maximum response.**

(4) **Turn band selector to police band, set test oscillator to 4000 kc, connect to antenna lead through 400 ohm dummy antenna. Set dial pointer to 4000 kc and adjust police oscillator trimmer until signal is heard. Then adjust police antenna trimmer for maximum response.**

(5) **Turn band selector to broadcast band, set test oscillator to 1500 kc, connect to antenna lead through a .0002 mfd. condenser. Set dial pointer at 1500 kc and adjust broadcast oscillator trimmer until signal is heard. Then adjust broadcast antenna trimmer for maximum response.**

(6) **With band selector in broadcast position, set test oscillator to 600 kc and adjust broadcast oscillator series padder for maximum response by simultaneously adjusting the padder and rocking the tuning dial.**

©John F. Rider, Publisher

MODEL 606
Schematic, Socket Trimmers, Alignment Parts

HALSON RADIO & TELEV., INC.

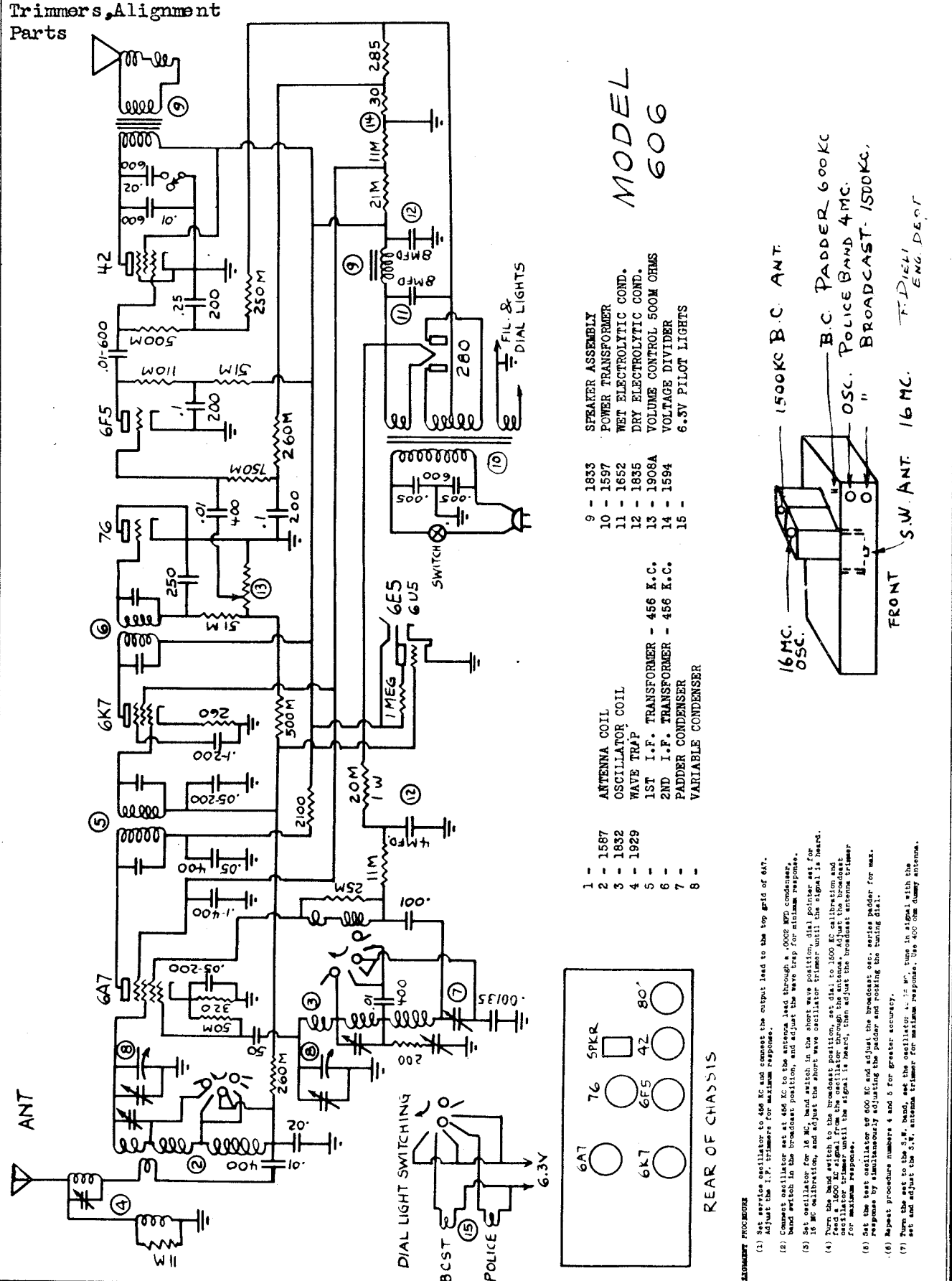

1 -
2 - 1587 ANTENNA COIL
3 - 1832 OSCILLATOR COIL
4 - 1929 WAVE TRAP
5 -
6 - 1ST I.F. TRANSFORMER - 456 K.C.
7 - 2ND I.F. TRANSFORMER - 456 K.C.
8 - PADDER CONDENSER
VARIABLE CONDENSER

9 - 1833 SPEAKER ASSEMBLY
10 - 1597 POWER TRANSFORMER
11 - 1652 WET ELECTROLYTIC COND.
12 - 1835 DRY ELECTROLYTIC COND.
13 - 1908A VOLUME CONTROL 500M OHMS
14 - 1594 VOLTAGE DIVIDER
15 - 6.3V PILOT LIGHTS

ALIGNMENT PROCEDURE

(1) Set service oscillator to 456 KC and connect the output lead to the top grid of 6A7. Adjust the I.F. trimmers for maximum response.

(2) Connect oscillator set at 456 KC to the antenna lead through a .0002 MFD condenser, band switch in the broadcast position, and adjust the wave trap for minimum response.

(3) Set oscillator for 16 MC, band switch in the short wave position, dial pointer set for 16 MC calibration, and adjust the short wave oscillator trimmer until the signal is heard.

(4) Turn the band switch to the broadcast position, set dial to 1500 KC calibration and feed a 1500 KC signal from the oscillator through a dummy antenna. Adjust the broadcast oscillator trimmer until the signal is heard, then adjust the broadcast antenna trimmer for maximum response.

(5) Set the test oscillator to 600 KC and adjust the broadcast osc. series padder for max. response by simultaneously adjusting the padder and rocking the tuning dial.

(6) Repeat procedure numbers 4 and 5 for greater accuracy.

(7) Turn the set to the S.W. band, set the oscillator to 16 MC, tune in signal with the set and adjust the S.W. antenna trimmer for maximum response. Use 400 ohm dummy antenna.

©John F. Rider, Publisher

HALSON RADIO & TELEV.,INC.

MODEL 612
Schematic, Socket Trimmers, Alignment Parts

Nine Tube Superheterodyne — Broadcast, Police & Foreign Short Wave

INSTRUCTION SHEET — SERVICE DATA

LINE VOLTAGE — 110 to 120 volts Alternating Current, 60 cycles

TUNING RANGES — Broadcast - 540 KC (555 meters) to 1725 KC (174 meters)
Police 2.3 MC (130 meters) to 7.9 MC (38 meters)
Foreign Short Wave - 7.4 MC (40 meters) to 25 MC (12 meters)

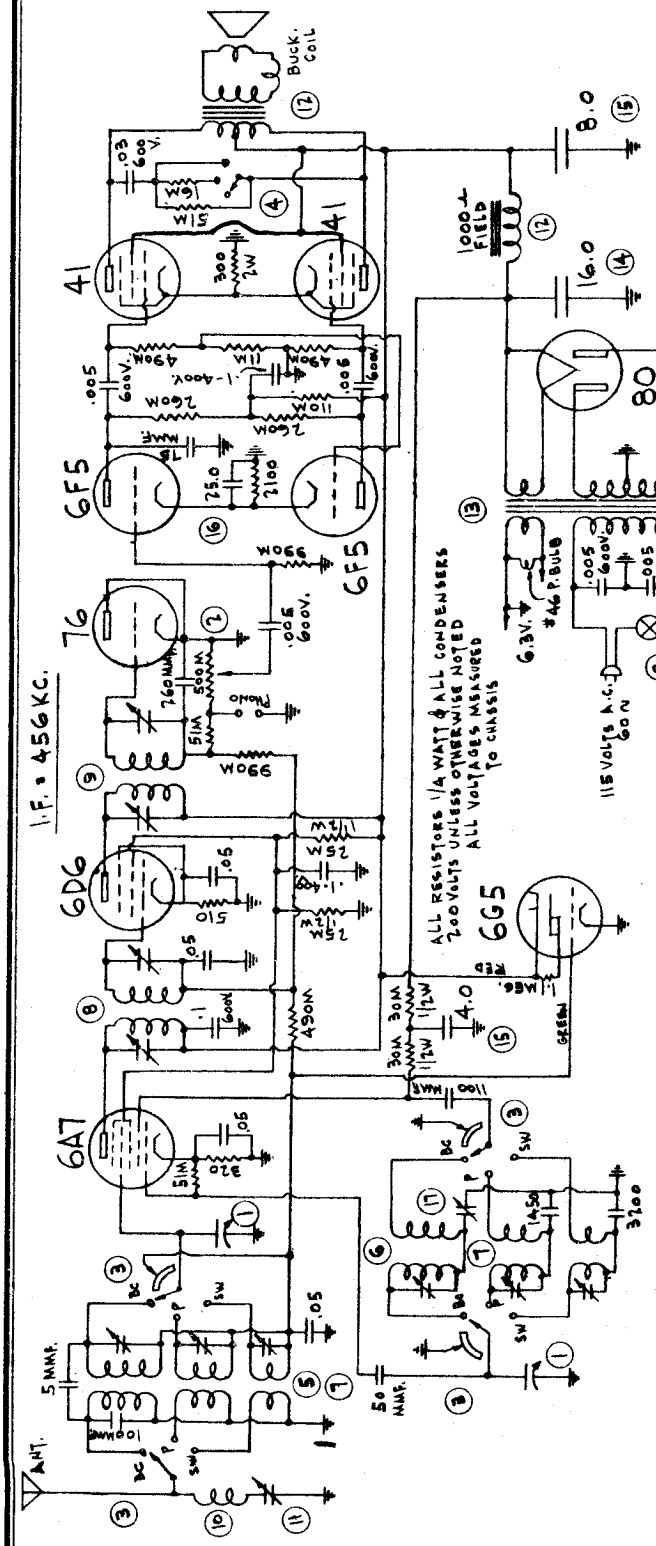

1 = 2290-3 - VARIABLE CONDENSER - 495 MMFD.
2 = 19080-3 - VOLUME CONTROL & SWITCH
3 = 2345 - RANGE SWITCH
4 = 2346 - TONE CONTROL SWITCH
5 = 2347 - ANTENNA COIL ASSEMBLY
6 = 2348 - OSCILLATOR " "
7 = 2349 - ANT.-OSC. " " (POLICE BAND)
8 = 23821-1 - I.F. TRANSFORMER - 1ST - 456 KC.
9 = 18481 - " " -2ND - " "
10 = 2297-1 - WAVE TRAP COIL - 456 KC.
11 = 2337-1 - " " TRIMMER
12 = 2356-2 - SPEAKER ASSEMBLY
13 = 2352-1 - POWER TRANSFORMER - 115V.-60~
14 = 2353 - FIELD COND. (WEST) 16 MFD - 450V.
15 = 2309-2 - " " 8-4 MFD. - 350V.
16 = 2369 - " " 25 MFD. - 15V.
17 = 1621-1 - PADDER COND. 200-685 MMFD.

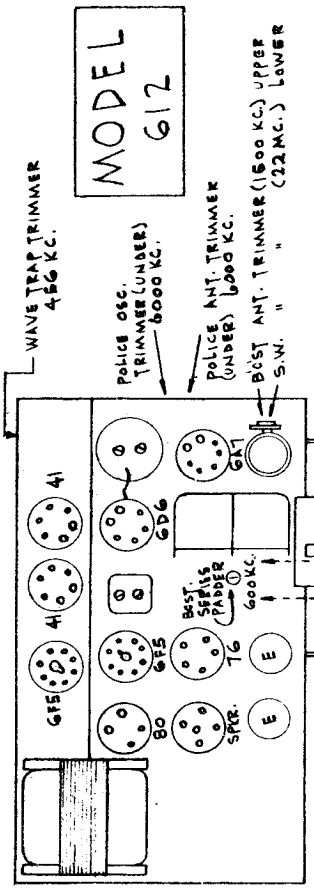

TUBE LAYOUT & TRIMMER LOCATIONS

ALIGNMENT PROCEDURE

(1) Set service oscillator to 456 kc and connect the output lead to the top grid of 6A7. Adjust trimmers for maximum response.

(2) Connect oscillator set at 456 kc to the antenna lead through a .0002 mfd. condenser; variable condenser closed, and adjust wave trap trimmer for minimum response. Band switch to be in broadcast position.

(3) Turn band selector to the short wave band, set the test oscillator to 22 mc and connect to antenna lead through 400 ohm dummy antenna. Set dial pointer to 22 mc and adjust short wave oscillator trimmer until signal is heard. Then adjust short wave antenna trimmer for maximum response.

(4) Turn band selector to police band, set test oscillator to 6000 kc, connect to antenna lead through 400 ohm dummy antenna. Set dial pointer to 6000 kc and adjust police oscillator trimmer until signal is heard. Then adjust police antenna trimmer for maximum response.

(5) Turn band selector to broadcast band, set test oscillator to 1500 kc, connect to antenna lead through a .0002 mfd. condenser. Set dial at 1500 kc and adjust broadcast oscillator trimmer until signal is heard. Then adjust broadcast antenna trimmer for maximum response.

(6) With band selector in broadcast position, set test oscillator to 600 kc and adjust broadcast oscillator series padder for maximum response by simultaneously adjusting the padder and rocking the tuning dial.

(7) Repeat procedures 5 and 6 for greater accuracy.

ad 1-30-31

©John F. Rider, Publisher

MODEL 770AW Late
Schematic, Socket

HALSON RADIO & TELEV., INC.

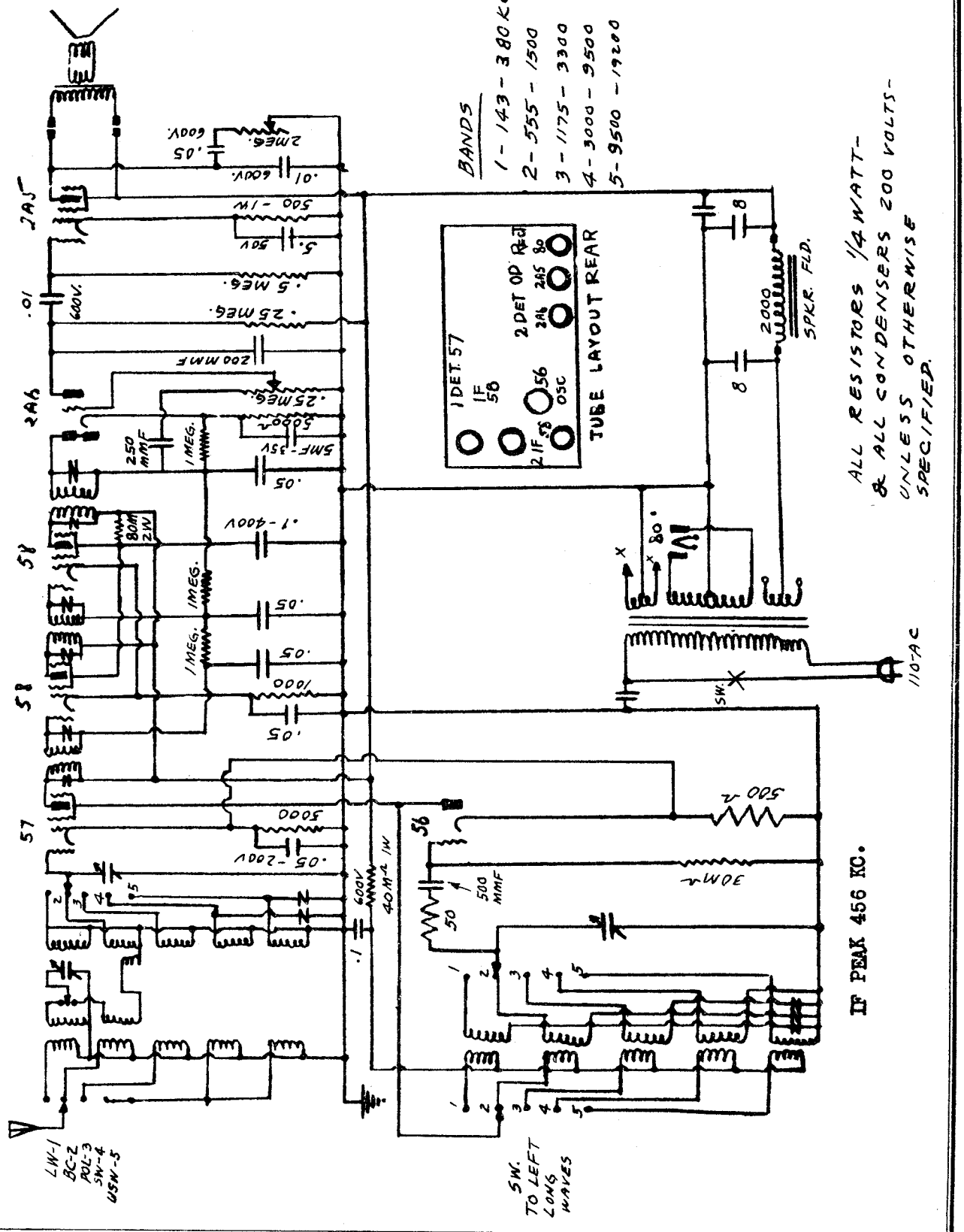

©John F. Rider, Publisher

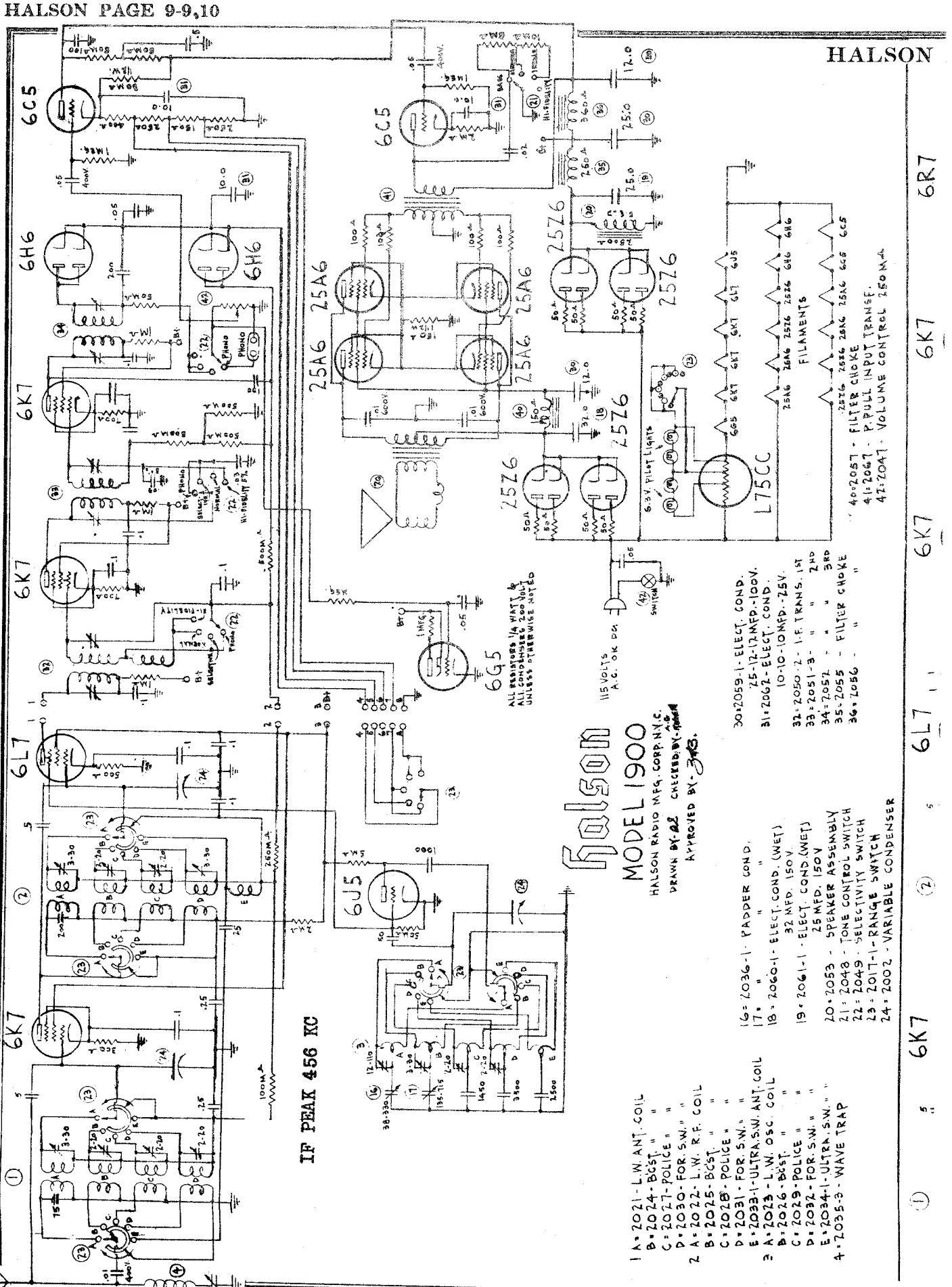

©John F. Rider, Publisher.

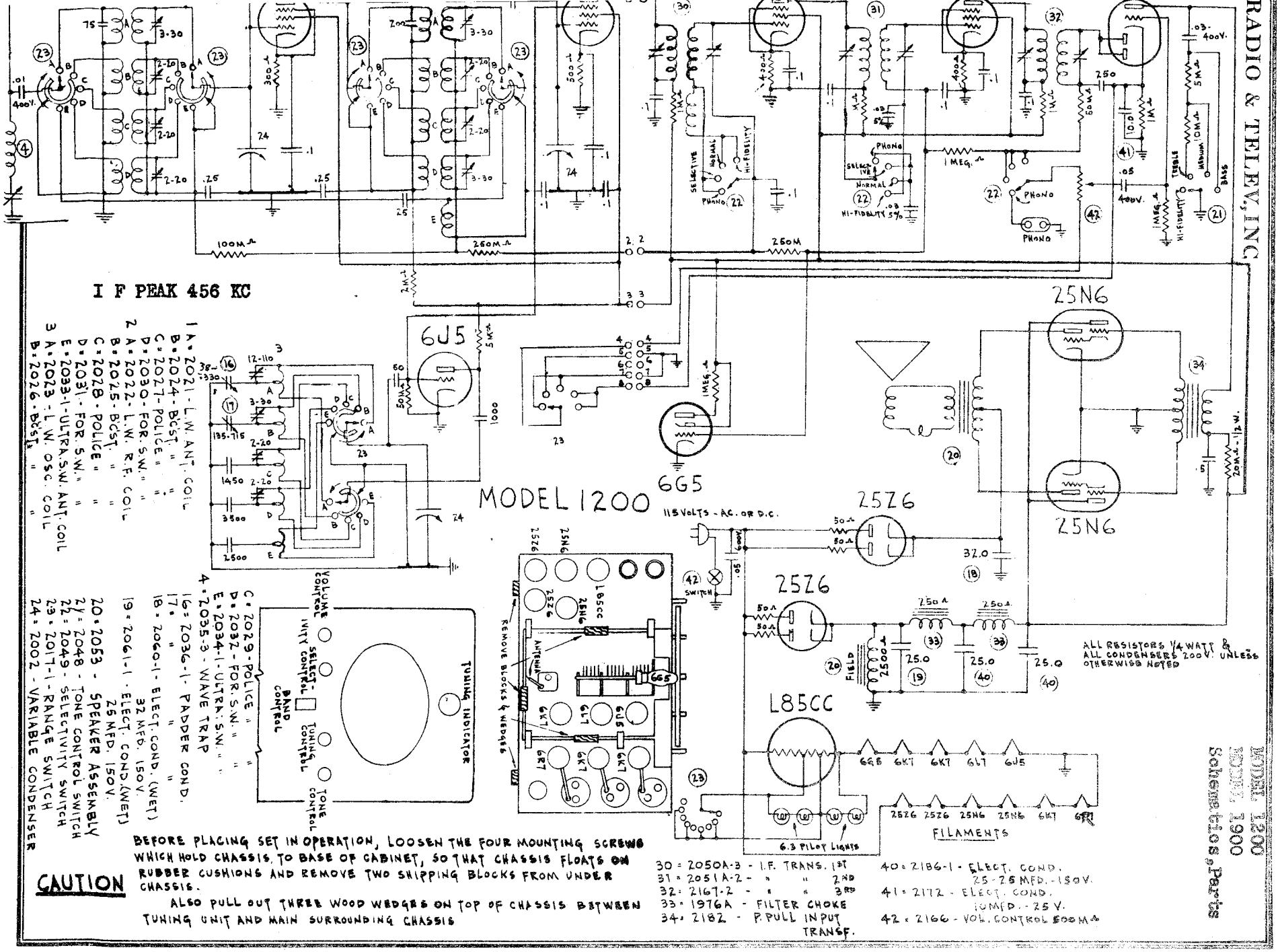

1 A = 2021 - L.W. ANT. COIL
B = 2024 - B'CST. " "
C = 2027 - POLICE " "
D = 2030 - FOR. S.W. " "
2 A = 2022 - L.W. R.F. COIL
B = 2025 - B'CST. " "
C = 2028 - POLICE " "
D = 2031 - FOR. S.W. " "
E = 2033-1 - ULTRA S.W. ANT. COIL
3 A = 2023 - L.W. OSC. COIL
B = 2026 - B'CST. " "
C = 2029 - POLICE " "
D = 2032 - FOR. S.W. " "
E = 2034-1 - ULTRA S.W. " "
4 = 2035-3 - WAVE TRAP
16 = 2036-1 - PADDER COND.
17 = " " "
18 = 2060-1 - ELECT. COND. (WET) 32 MFD. 150 V.
19 = 2061-1 - ELECT. COND. (WET) 25 MFD. 150 V.
20 = 2053 - SPEAKER ASSEMBLY
21 = 2048 - TONE CONTROL SWITCH
22 = 2049 - SELECTIVITY SWITCH
23 = 2017-1 - RANGE SWITCH
24 = 2002 - VARIABLE CONDENSER

30 = 2050A-3 - I.F. TRANS. 1ST
31 = 2051A-2 - " " 2ND
32 = 2167-2 - " " 3RD
33 = 1976A - FILTER CHOKE
34 = 2182 - P. PULL INPUT TRANSF.

40 = 2186-1 - ELECT. COND. 25-25 MFD. - 150 V.
41 = 2172 - ELECT. COND. 10 MFD. - 25 V.
42 = 2166 - VOL. CONTROL 500 M.A.

CAUTION BEFORE PLACING SET IN OPERATION, LOOSEN THE FOUR MOUNTING SCREWS WHICH HOLD CHASSIS TO BASE OF CABINET, SO THAT CHASSIS FLOATS ON RUBBER CUSHIONS AND REMOVE TWO SHIPPING BLOCKS FROM UNDER CHASSIS.

ALSO PULL OUT THREE WOOD WEDGES ON TOP OF CHASSIS BETWEEN TUNING UNIT AND MAIN SURROUNDING CHASSIS

MODEL 1200
1900
Schematics & Parts

©John F. Rider, Publisher

MODEL H61 6 TUBES A. C. — 16 TO 2140 METERS

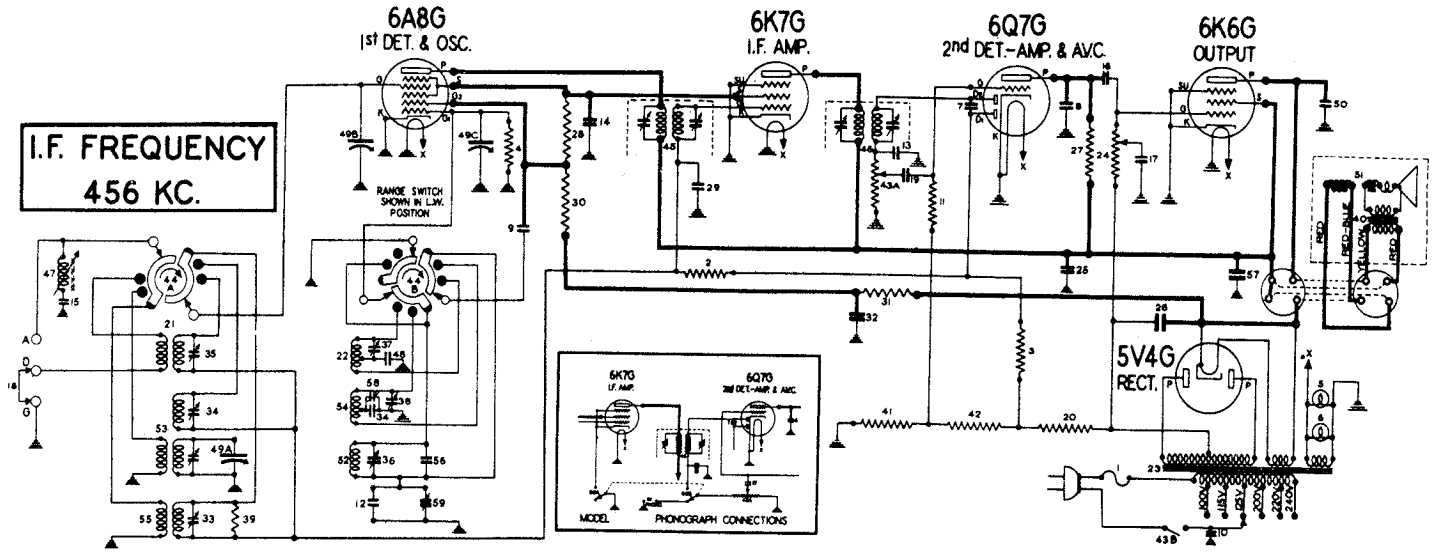

PARTS LIST H61, H62, HP61, HP62
6 TUBE A.C. 16-2100 METERS

Diagram Number	Part Number	Description
1	145510	Fuse 1 amp. (use on line voltages of 100 to 125 volts)
1	1211989	Fuse 3/4 amp. (use on line voltages of 200 to 240 volts)
2-3	1210470	Carbon resistor 510,000 ohm 1/4 watt
4	1210116	Carbon resistor 51,000 ohms 1/4 watt
5-6	1209000	Dial lamp 6 to 8 volt
7-8-9	1211432	Mica condenser 260 mmfd.
10	1211338	Shielded condenser .012 mfd. 1,000 volt
11	1209885	Carbon resistor 1.1 megohm 1/4 watt
12	1211541	Mica condenser 70 mmfd.
13	1211430	Mica condenser 110 mmfd.
14	1211438	Paper condenser .1 mfd. 150 volt
15	1211934	Mica condenser 51 mmfd.
16	1211435	Paper condenser .02 mfd. 400 volt
17	1211437	Paper condenser .01 mfd. 400 volt
18	1211422	Ground connector
19	1211440	Paper condenser .05 mfd. 200 volt
20	1209463	Carbon resistor 270 ohm 1 watt
21	1211402	Antenna coil (16.6 to 51.8 meters) with trimmer
22	1211401	Oscillator coil (16.6 to 51.8 meters) with trimmer
23	1211668	Universal power transformer (100-240 volts 25-133 cycle)
24	1211398	Tone control (500,000 ohms)
25	1211967	Paper condenser .25 mfd. 300 volt
26	1211445	Electrolytic condenser 16 mfd. 400 volt
27	1210119	Carbon resistor 210,000 ohm 1/4 watt
28	1211999	Carbon resistor 11,000 ohm 1/2 watt
29	1211442	Condenser (low loss) .05 mfd. 150 volt
30-31	1211998	Carbon resistor 11,000 ohm 1 watt
32	1212000	Electrolytic condenser 4 mfd. 250 volt
33-34-35 36-37-38	1211336	Trimmer condenser
39	1212026	Carbon resistor 160,000 ohm 1/4 watt
40	1211470	Output transformer for 1211425 speaker
41	1211969	Wire wound resistor 35 ohm 1/2 watt
42	1211328	Wire wound resistor 20 ohm 1/2 watt
43A 43B	1211962	Volume control (250,000 ohm) A.C. line switch
44A-44B	1211394	Range switch
45	1211933	1st I.F. transformer
46	1211405	2nd I.F. transformer
47	1212005	Wave trap coil assembly
48	1211331	Mica condenser 3,860 mmfd.
49A to C	1211395	Gang condenser
50	1211966	Paper condenser .004 mfd. 750 volt
51	1211425	8 inch dynamic speaker
52	1212002	Oscillator coil (750 to 2,140 meters) with trimmer
53	1212003	Antenna coil (172 to 568 meters) with trimmer
54	1211964	Oscillator coil (172 to 568 meters) with trimmer
55	1212004	Antenna coil (750 to 2,140 meters) with trimmer
56	1207625	Mica condenser 50 mmfd.
57	1211444	Electrolytic condenser 16 mfd. 300 volt
58-59	1211337	Padding condenser (20 to 120 mmfd.)
60A-60B	1211669	Phonograph toggle switch
61	1211670	Phonograph terminal strip

SOCKET VOLTAGES

VOLUME CONTROL ON FULL — ANTENNA GROUNDED
RANGE SWITCH ON BROADCAST POSITION
DIAL TUNED TO 568 METERS

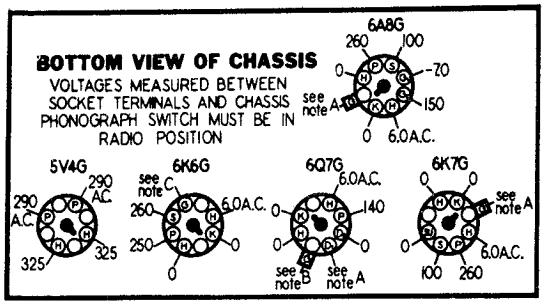

REAR OF CHASSIS

IMPORTANT: Use a high resistance voltmeter of 1,000 ohms per volt.

NOTE A: The grid bias for the 6A8G, 6K7G, and the anode voltage of the A.V.C. section of the 6Q7G is -1.5 volts measured across resistors 41 and 42.

NOTE B: The grid bias for the audio section of the 6Q7G is -1.0 volt measured across resistor 41.

NOTE C: The grid bias for the 6K6G output tube is -18.5 volts measured across resistors 41, 42 and 20.

MODELS H61,H62,HP61,HP62 Socket,Trimmers,Alignment Parts

HETRO ELECTRICAL INDUSTRIES

CALIBRATION AND ALIGNMENT

ALIGNING EQUIPMENT: For proper alignment, an output meter and an accurately calibrated oscillator with a tuning range from 19 to 1700 meters (15.8 MC. to 177 KC.) are required.

Connect the output meter from the plate of the output tube to chassis. A convenient point to make the plate connection is to the yellow wire on the speaker socket.

ALIGNING THE I. F. AMPLIFIER: Turn the volume control to maximum volume position and keep it in this position throughout the entire alignment procedure. Turn the range switch to the broadcast band (center position of band selector).

Connect the test oscillator output leads to the 6A8G control grid and chassis with a .1 mfd. condenser in series with the oscillator output. Set the oscillator to exactly 657.5 meters (456 KC.). Set the receiver dial at any point where it has no tuning effect on the oscillator signal.

Adjust the four I.F. trimmers, Nos. 1, 2, 3 and 4, for maximum output meter deflection, then repeat the trimmer adjustment.

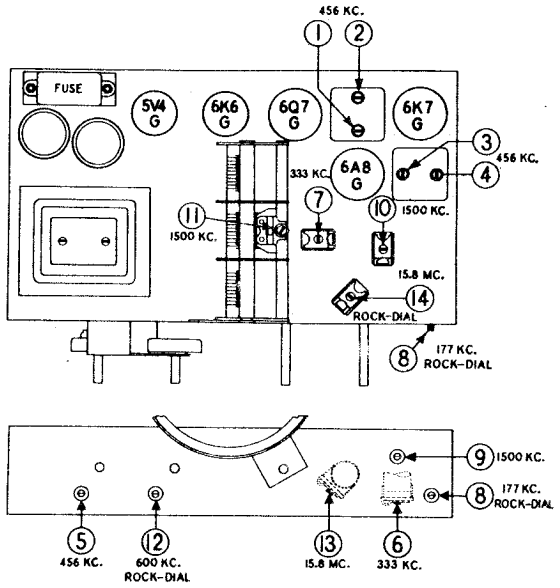

TRIMMER LOCATIONS

Trimmer Number		Alignment Wavelength	Alignment Frequency
1-2	1st I.F. transformer trimmers	657.5 M.	456 KC.
3-4	2nd I.F. transformer trimmers	657.5 M.	456 KC.
5	Wave-trap trimmer	657.5 M.	456 KC.
6	Long wave oscillator shunt trimmer	900 M.	333 KC.
7	Long wave antenna shunt trimmer	900 M.	333 KC.
8	Long wave oscillator series padder	1700 M.	177 KC.
9	Broadcast oscillator shunt trimmer	200 M.	1500 KC.
10	Broadcast detector shunt trimmer	200 M.	1500 KC.
11	Broadcast antenna shunt trimmer	200 M.	1500 KC.
12	Broadcast padding trimmer	500 M.	600 KC.
13	Short wave oscillator shunt trimmer	19 M.	15.8 MC.
14	Short wave antenna shunt trimmer	19 M.	15.8 MC.

WAVE-TRAP ADJUSTMENT: The wave-trap adjustment screw, No. 5 is located on the front of the chassis. Take off the lock nut and washer on this adjusting screw. Leave the test oscillator at 657.5 meters (456 KC.). Connect the oscillator output to the A and G terminals of the receiver with a 400 ohm resistor in series with the A terminal and oscillator output. Then adjust the wave-trap screw No. 5 for minimum output. If some particular station with a frequency near 657.5 meters (456 KC.) causes code interference, it may be desirable to adjust the wave-trap on the actual frequency of the interfering station. Having completed this operation it is very necessary to replace the washer and tighten the lock nut.

LONG WAVE BAND CALIBRATION AND ALIGNMENT

With the gang condenser in full mesh, the main dial pointer should be on the vertical line between 175 and 550 meters on the dial scale. If it is not, hold the dial gear and turn the pointer to the correct position.

Turn the range switch to the long wave band (fully clockwise position) and leave the test oscillator output connected to the A and G terminals of the receiver with a 400 ohm carbon resistor in series with the A terminal and the oscillator output.

Adjust the test oscillator to exactly 900 meters (333 KC.).

Tune in the 900 meter oscillator signal and determine whether the receiver dial calibration is correct at this point on the dial. If the calibration is correct, do not adjust the long wave oscillator shunt trimmer No. 6. If the calibration is incorrect, adjust trimmer No. 6 to give proper calibration.

Carefully tune the receiver to the oscillator signal and adjust trimmer No. 7 for maximum output.

Adjust the test oscillator to 1700 meters (177 KC.) and tune the receiver to the signal. Adjust trimmer No. 8 for maximum output. Then try to increase the output meter by detuning No. 8 slightly and retuning the receiver dial. If the output goes down, detune the trimmer in the opposite direction. Continue detuning the trimmer and retuning the receiver dial until maximum output meter deflection is secured. This operation is commonly known as "rocking" and when performed as described will give maximum selectivity and sensitivity even though the dial may be slightly off calibration at 1700 meters.

BROADCAST BAND CALIBRATION AND ALIGNMENT

Turn the range switch to the broadcast band (center position). Adjust the test oscillator to exactly 200 meters (1500 KC.) and leave its output connected to the A and G terminals through a 400 ohm carbon resistor.

Tune in the 200 meter oscillator signal and determine whether the dial calibration is correct at the low wave length end of the dial. The 200 meter point is the first dial division above 175 meters on the yellow dial scale, i.e. the yellow dial division nearest to the 19 meter indication on the red scale.

If the calibration is correct, do not adjust the broadcast oscillator shunt trimmer No. 9. If the calibration is incorrect, adjust trimmer No. 9 to give proper calibration.

Carefully tune the receiver to the 200 meter oscillator signal and adjust trimmers No. 10 and 11 for maximum output.

Adjust the test oscillator to 500 meters (600 KC.) and tune the receiver to the signal. Adjust trimmer No. 12 for maximum output. Then try to increase the output meter reading by detuning No. 12 slightly and retuning the receiver dial. If the output goes down, detune the trimmer in the opposite direction. Continue detuning the trimmer and retuning the receiver dial until maximum output meter deflection is secured. This operation is commonly known as "rocking" and when performed as described will give maximum selectivity and sensitivity even though the dial may be slightly off calibration at 500 meters.

SHORT WAVE BAND CALIBRATION AND ALIGNMENT

Turn the range switch to the extreme counter-clockwise position. Be sure that the D and G terminals on the antenna terminal strip are connected together.

Set the test oscillator to exactly 19 meters (15.8 MC.). Tune in the 19 meter oscillator signal on the receiver dial to determine whether the receiver dial calibration is correct at 19 meters. If it is, do not adjust the short wave band oscillator shunt trimmer No. 13. If the calibration is incorrect, set the receiver dial pointer exactly at 19 meters and adjust the oscillator shunt trimmer No. 13 until the oscillator signal comes in at this point.

Check to see that it has been adjusted to the proper peak by tuning the receiver to approximately 20.1 meters. A repeat signal should be heard at this point. If none is present, even with greatly increased oscillator output, retune the receiver to 19 meters and adjust trimmer No. 13 to the proper peak with the trimmer screw farther out.

Carefully tune the receiver to the signal and adjust trimmer No. 14 to a peak. Then try to increase the output by detuning the trimmer No. 14 slightly and retuning the dial until a maximum output meter deflection is secured. Check the adjustment by tuning the receiver to the image at about 20.1 meters. The image should be weaker than the 19 meter signal. If the signal at 20.1 meter dial setting is equal to or stronger than the 19 meter signal trimmer No. 14 is not set to the proper peak. Turn the trimmer in a turn or so, then readjust as above.

MISCELLANEOUS PARTS

Part Number	Description
106261	Flat steel mounting washer
1211423	Fuse mounting strip
1211424	Fuse cover
1211450	Terminal strip G.D.A.
1211539	Rubber chassis mounting bushing
1211540	#10x1-1/4 chassis mounting screw
1211549	Knob (for volume control)
1211554	Knob (for tuning and tone control)
1211670	Phonograph terminal strip
1211914	Speaker socket (4 prong)
1211948	#2x3/8 R.H.W. screw for escutcheon
1211936	Felt washer (for back of knobs) also used for chassis mounting
1211937	Embossed washer (used with 1211444 electrolytic condenser)
1211938	Felt washer for back of knobs
1212011	Knob (for range switch)
1212027	Tube shield assembly

TUNING DRIVE AND DIAL PARTS

Part Number	Description
1211465	Dial ring and bracket assembly
1211466	Dial disc and bushing assembly
1211489	Dial lamp shield
1211493	Dial light socket
1211522	Escutcheon with glass
1211697	Dial scale retaining clip
1211939	Drive shaft and bracket assembly
1211954	Dial background
1211990	Dial drive shaft
1211991	Spring for dial drive shaft
1212006	Pointer and stud assembly
1212009	Dial scale

Date 2/2/38

SERVICE DATA FOR MODELS H61, H62, HP61, HP62. 6 TUBE AC. 16-2100 METERS

©John F. Rider, Publisher

©John F. Rider, Publisher

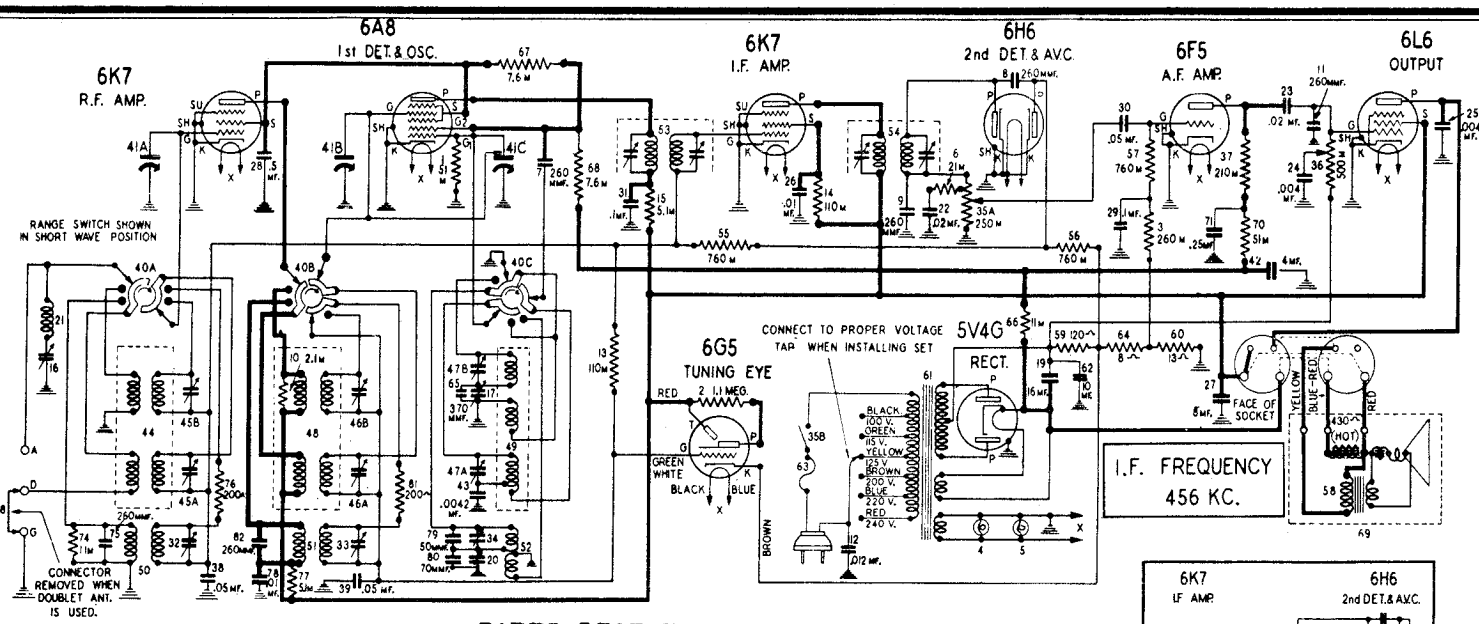

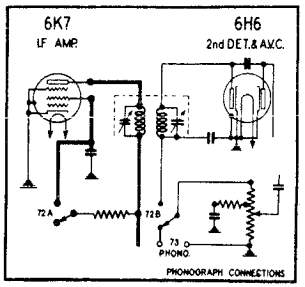

SOCKET VOLTAGES

RANGE SWITCH ON BROADCAST POSITION
VOLUME CONTROL ON FULL
DIAL TUNED TO 568 METERS
ANTENNA GROUNDED

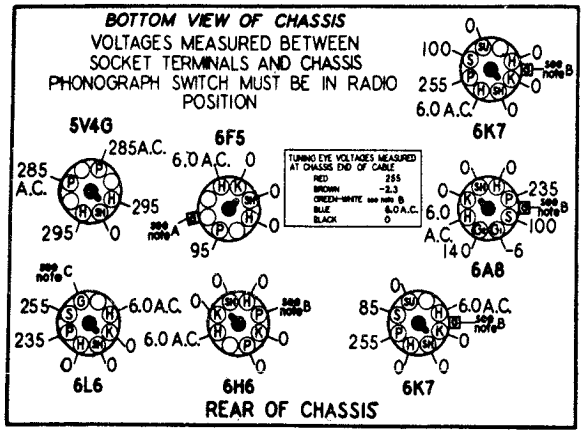

IMPORTANT: Use a high resistance voltmeter of 1,000 ohms per volt.

NOTE A: The grid bias for the 6F5 is -1.5 volts measured across resistor 60.

NOTE B: The grid bias for the 6A8, 6K7's, and the anode voltage of the A.V.C. section of the 6H6 is -2.3 volts measured across resistors 60 and 64.

NOTE C: The grid bias for the 6L6 output tube is -15 volts measured across resistor 59, 64 and 60.

PARTS LIST H63, H64, HP63, HP64

Diagram Number	Part Number	Description
1	1210116	Carbon resistor 51,000 ohm 1/4 watt
2	1209885	Carbon resistor 1.1 megohm 1/4 watt
3	1210117	Carbon resistor 260,000 ohm 1/4 watt
4-5	1209000	Pilot lamp No. 40, 6-8 volts
6	1210862	Carbon resistor 21,000 ohm 1/4 watt
7-8-9	1211432	Mica condenser 260 mmfd.
10	1212020	Carbon resistor 2,100 ohm 1/4 watt
11	1211432	Mica condenser 260 mmfd.
12	1211338	Shield condenser .012 mfd. 1,000 volt
13-14	1209883	Carbon resistor 110,000 ohm 1/4 watt
15	1211068	Carbon resistor 5,100 ohm 1/4 watt
16	1211337	Wave trap condenser
17	1211337	Padding condenser
18	1211422	Ground connector
19	1211972	Electrolytic condenser 16 mfd. 400 volt
20	1211337	Padding condenser
21	1211408	Wave trap coil assembly
22-23	1211435	Paper condenser .02 mfd. 400 volt
24	1211436	Paper condenser .004 mfd. 400 volt
25	1211986	Paper condenser .004 mfd. 750 volt
26	1211437	Paper condenser .01 mfd. 400 volt
27	1211870	Electrolytic condenser 8 mfd. 350 volt
28	1211992	Paper condenser .5 mfd. 150 volt
29	1211438	Paper condenser .1 mfd. 150 volt
30	1211440	Paper condenser .05 mfd. 200 volt
31	1211441	Paper condenser .1 mfd. 300 volt
32-33-34	1211336	Trimmer condenser
35A	1211396	Volume control (250,000 ohms)
35B		A. C. line switch
36	1211398	Tone control (500,000 ohms)
37	1210119	Carbon resistor 210,000 ohm 1/4 watt
38-39	1211442	Condenser (low loss) .05 mfd. 150 volt
40A to C	1211464	Range switch
41A to C	1211932	Gang condenser
42	1211931	Electrolytic condenser 4 mfd. 250 volt
43	1211334	Mica condenser .0042 mfd.
44	1211409	Antenna coil & shield (172 to 568 M.) & (16.7 to 54.5 M.) with trimmer
45A-45B 46A-46B 47A-47B	1211496	Trimmer condenser
48	1211410	R.F. coil & shield (172 to 568 M.) and (16.7 to 54.5 M.) with trimmer
49	1211411	Oscillator coil & shield (172 to 568 M.) & (16.7 to 54.5 M.) with trimmer
50	1211961	Antenna coil (750 to 2,140 M.) with trimmer
51	1211961	Detector coil (750 to 2,140 M.) with trimmer
52	1211960	Oscillator coil (750 to 2,140 M.) with trimmer
53	1211930	1st I.F. transformer
54	1211959	2nd I.F. transformer
55-56-57	1211136	Carbon resistor 760,000 ohm 1/4 watt
58	1211963	Output transformer for 1211965 speaker
	1211945	Output transformer for 121109 speaker
59	1211970	Wire wound resistor 120 ohm 2 watt
60	1211971	Wire wound resistor 13 ohm 1/2 watt
61	1211958	Universal power transformer 100-240 volt 25-133 cycles
62	1211455	Electrolytic condenser 10 mfd. 25 volt
63	1211993	Fuse 1.5 amp. 100-125 volts
	145510	Fuse 1 amp. 200-240 volts
64	1211968	Wire wound resistor 8 ohm 1/2 watt
65	1211434	Mica condenser 370 mmfd.
66	1211998	Carbon resistor 11,000 ohm 1 watt
67	1212024	Carbon resistor 7,600 ohm 1/2 watt
68	1212025	Carbon resistor 7,600 ohm 1 watt
69	1211965	8 inch dynamic speaker
	121109	12 inch dynamic speaker
70	1210116	Carbon resistor 51,000 ohm 1/4 watt
71	1207931	Paper condenser .25 mfd. 200 volt
72A-72B	1211669	Phonograph toggle switch
73	1211670	Phonograph terminal strip
74	1212021	Carbon resistor 11,000 ohm 1/4 watt
75-82	1211432	Mica condenser 260 mmfd.
76	1211006	Carbon resistor 200 ohm 1/4 watt
77	1211066	Carbon resistor 5,100 ohm 1/4 watt
78	1211437	Paper condenser .01 mfd. 400 volt
79	1207625	Mica condenser 50 mmfd.
80	1211541	Mica condenser 70 mmfd.
81	1211006	Carbon resistor 200 ohm 1/4 watt

MODELS H63,H64,HP63,HP64
Socket,Trimmers,Alignment Parts

HETRO ELECTRICAL INDUSTRIES

CALIBRATION AND ALIGNMENT

ALIGNING EQUIPMENT

For proper alignment, an output meter and an accurately calibrated oscillator with a tuning range from 19 to 1700 meters (15.8 MC. to 177 KC.) are required.

Connect the output meter from the plate of the output tube to chassis. A convenient point to make the plate connection is to the yellow wire on the speaker socket.

ALIGNING THE I.F. AMPLIFIER

Turn the volume control to maximum volume position and keep it in this position throughout the entire alignment procedure. Turn the range switch to the intermediate broadcast position (fully clockwise).

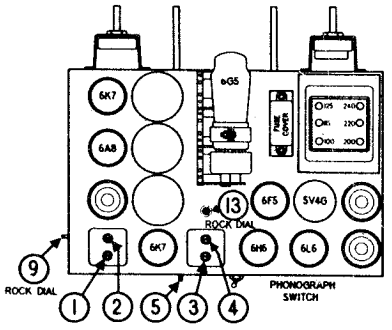

TOP VIEW OF CHASSIS

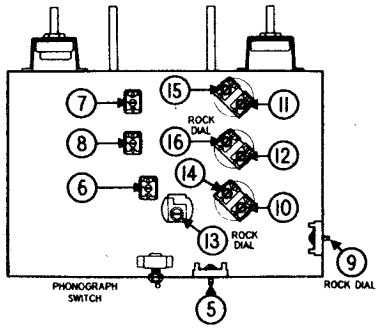

BOTTOM VIEW OF CHASSIS

Connect the test oscillator output leads to the 6A8 control grid and chassis with a .1 mfd. condenser in series with the oscillator output. Set the oscillator to exactly 658 meters (456 KC.). Set the receiver dial at any point where it has no tuning effect on the oscillator signal.

Adjust the four I.F. trimmers, Nos. 1, 2, 3 and 4, for maximum output meter deflection, then repeat the trimmer adjustment.

WAVE-TRAP ADJUSTMENT

The wave-trap adjusting trimmer, No. 5, is located on the back of the chassis. Leave the test oscillator at 658 meters (456 KC.). Connect the oscillator output to the A and G terminals of the receiver with a 400 ohm resistor in series with the A terminal and oscillator output. Then adjust the wave-trap trimmer No. 5 for minimum output. If some particular station with a frequency near 657.5 meters (456 KC.) causes code interference, it may be desirable to adjust the wave-trap on the actual frequency of the interfering station.

LONG WAVE BAND CALIBRATION AND ALIGNMENT

With the gang condenser in full mesh, the main dial pointer should be on the vertical line between 175 and 550 meters on the dial scale. If it is not, hold the dial gear and turn the pointer to the correct position.

Turn the range switch to the center position (long wave) and leave the test oscillator output connected to the A and G terminals of the receiver with a 400 ohm carbon resistor in series with the A terminal and the oscillator output.

Adjust the test oscillator to exactly 900 meters (333 KC.).

Tune in the 900 meter oscillator signal and determine whether the receiver dial calibration is correct at this point on the dial. If the calibration is correct, do not adjust the long wave oscillator shunt trimmer No. 6. If the calibration is incorrect, adjust trimmer No. 6 to give proper calibration.

Carefully tune the receiver to the oscillator signal and adjust trimmers No. 7 and 8 for maximum output.

Adjust the test oscillator to 1700 meters (177 KC.) and tune the receiver to the signal. Adjust trimmer No. 13 for maximum output. Then try to increase the output meter by detuning No. 13 slightly and retuning the receiver dial. If the output goes down, detune the trimmer in the opposite direction. Continue detuning the trimmer and retuning the receiver dial until maximum output meter deflection is secured. This operation is commonly known as "rocking" and when performed as described will give maximum selectivity and sensitivity even though the dial may be slightly off calibration at 1700 meters.

BROADCAST BAND CALIBRATION AND ALIGNMENT

Turn the range switch to the broadcast position (fully clockwise) Adjust the test oscillator to exactly 200 meters (1500 KC.) and leave its output connected to the A and G terminals through a 400 ohm carbon resistor.

Tune in the 200 meter oscillator signal and determine whether the dial calibration is correct at the low wave length end of the dial. The 200 meter point is the first dial division above 175 meters on the yellow dial scale, i.e. the yellow dial division nearest to the 19 meter indication on the red scale.

If the calibration is correct, do not adjust the broadcast oscillator shunt trimmer No. 10. If the calibration is incorrect, adjust trimmer No. 10 to give proper calibration.

Carefully tune the receiver to the 200 meter oscillator signal and adjust trimmers No. 11 and 12 for maximum output.

Adjust the test oscillator to 500 meters (600 KC.) and tune the receiver to the signal. Adjust trimmer No. 9 for maximum output. Then try to increase the output meter reading by detuning No. 9 slightly and retuning the receiver dial. If the output goes down, detune the trimmer in the opposite direction. Continue detuning the trimmer and retuning the receiver dial until maximum output meter deflection is secured. This operation is commonly known as "rocking" and when performed as described, will give maximum selectivity and sensitivity even though the dial may be slightly off calibration at 500 meters.

SHORT WAVE BAND CALIBRATION AND ALIGNMENT

Turn the range switch to the extreme counter-clockwise position.

Be sure that the D and G terminals on the antenna terminal strip are connected together.

TRIMMER LOCATIONS

Trimmer Number		Alignment Frequency	Alignment Wave-Length
1-2	1st I.F. transformer trimmer--------	456 KC.	658 M.
3-4	2nd I.F. transformer trimmer--------	456 KC.	658 M.
5	Wave trap trimmer-------------------	456 KC.	658 M.
6	Long wave oscillator shunt trimmer--	333 KC.	900 M.
7	Long wave antenna shunt trimmer-----	333 KC.	900 M.
8	Long wave detector shunt trimmer----	333 KC.	900 M.
9	Broadcast oscillator series padder--	600 KC.	500 M.
10	Broadcast oscillator shunt trimmer--	1500 KC.	200 M.
11	Broadcast antenna shunt trimmer-----	1500 KC.	200 M.
12	Broadcast detector shunt trimmer----	1500 KC.	200 M.
13	Long wave oscillator series padder--	177 KC.	1700 M.
14	Short wave oscillator shunt trimmer-	15.8 MC.	19 M.
15	Short wave antenna shunt trimmer----	15.8 MC.	19 M.
16	Short wave detector shunt trimmer---	15.8 MC.	19 M.

Set the test oscillator to exactly 19 meters (15.8 MC.). Tune in the 19 meter oscillator signal on the receiver dial to determine whether the receiver dial calibration is correct at 19 meters. If it is, do not adjust the short wave band oscillator shunt trimmer No. 14. If the calibration is incorrect, set the receiver dial pointer exactly at 19 meters and adjust the oscillator shunt trimmer No. 14 until the oscillator signal comes in at this point.

Check to see that it has been adjusted to the proper peak by tuning the receiver to approximately 20.1 meters. A repeat signal should be heard at this point. If none is present, even with greatly increased oscillator output, retune the receiver to 19 meters and adjust trimmer No. 14 to the proper peak with the trimmer screw farther out.

Carefully tune the receiver to the signal and adjust trimmers No. 15 and 16 to a peak. Then try to increase the output by detuning the trimmer No. 16 slightly and retuning the dial until a maximum output meter deflection is secured. Then readjust trimmer No. 15 to a peak. Check the adjustment by tuning the receiver to the image at about 20.1 meters. The image should be much weaker than the 19 meter signal. If the signal at 20.1 meter dial setting is equal to or stronger than the 19 meter signal trimmer No. 16 is not set to the proper peak. Turn the trimmer in a turn or so, then readjust as above.

MISCELLANEOUS PARTS

Part Number	Description
120386	Flat steel mounting washer
1211450	Terminal strip G.D.A.
1211468	Shaft for range selector
1211484	Tuning indicator cable & plug
1211538	#14x1-1/4 chassis mounting screw
1211539	Rubber chassis mounting bushing
1211549	Knob (used with tone & volume control)
1211550	Knob (for range switch)
1211551	Knob (front section) for tuning control
1211552	Knob (rear section) for tuning control
1211935	Felt washer (for rear of tuning knob)
1211936	Felt washer (for back of knobs)
1211937	Embossed washer (used with 1211972 electrolytic condenser)
1211940	Bracket for range selector shaft
1211948	#2x3/8 R.H.W. screw (for escutcheon)
1211949	Link and lever assembly
1211957	Escutcheon for magic eye
1211984	#1x1/4 R.H.W. screw for eye escutcheon

TUNING DRIVE AND DIAL PARTS

Part Number	Description
1211461	Spring washer (for planetary drive)
1211462	Dual ratio planetary drive
1211469	Idler gear tension spring
1211489	Dial lamp shield
1211493	Dial lamp socket
1211494	Compression spring for band indicator
1211522	Escutcheon with glass
1211697	Dial scale retaining clip
1211941	Idler gear and pinion assembly
1211942	Shaft for second pointer
1211943	Dial disc and bushing assembly
1211944	Dial ring, bracket and shaft assembly
1211951	Pointer (second hand)
1211955	Dial background
1211956	Bracket and light bracket assembly
1211994	Idler gear tension spring
1212006	Pointer & stud assembly
1212007	Dial scale
1212023	Band indicator and link assembly

DATE 2/2/38

©John F. Rider, Publisher

MODELS A,B Tuners
Installation Data

HETRO ELECTRICAL INDUSTRIES

MODEL HA67
Schematic,Voltage

The tuner is secured to the cabinet by the two machine screws provided. The escutcheon with two wood screws provided. Insert rubber washer of proper thickness between cabinet and tuner. The Black knob should be in position "6" to distinguish the manual tuning button from the other five automatic tuning buttons with Brown Knobs. These knobs merely slip over the shafts by pushing them firmly. The tuner is supplied with 3 connecting wires, 12 inches long. Before connecting the tuner, select the location in the cabinet, if possible, directly above the tuning condenser or anywhere that will permit short connections. Then drill the cabinet using the template supplied with the tuner, and connect it to the set. Lead wires should come from the right hand side of the unit. Connect the tuner in one of the methods suggested. Tuner may be connected and tested before drilling the cabinet. Once the tuner is adjusted, the trimmers or the connecting wires should not be moved, or it will be necessary to reset the trimmers slightly.

Method 2 -- RED TRACER wire to RADIO FREQUENCY section of tuning condenser (usually the center section). BLUE TRACER wire to Oscillator section. This section usually has no wire connecting it to grid cap of tube. WHITE wire to frame or Ground lug of tuning condenser. Make sure that RED TRACER is not connected to antenna section.

Method 2B - Recommended for sets with short wave bands (3 section condenser)
RED TRACER wire to the Grid terminal of the Broadcast band radio frequency coil.
BLUE TRACER wire to the Grid terminal of the Broadcast band Oscillator coil.
These connections may be either at the coil or at the band switch, whichever is shorter. WHITE WIRE to frame or Ground lug of tuning condenser. By using this method, the tuner is only connected to the circuit when the wave band switch is in the Broadcast position and the short wave reception and dial calibrations are not affected. NOTE: If tuning coils have all secondary winding in series, this method will revert to #2 which would then be preferable, because it is easier to connect. In this case, we recommend realigning the receiver with the Master button #"6" pushed in. This applies particularly to the short wave band.

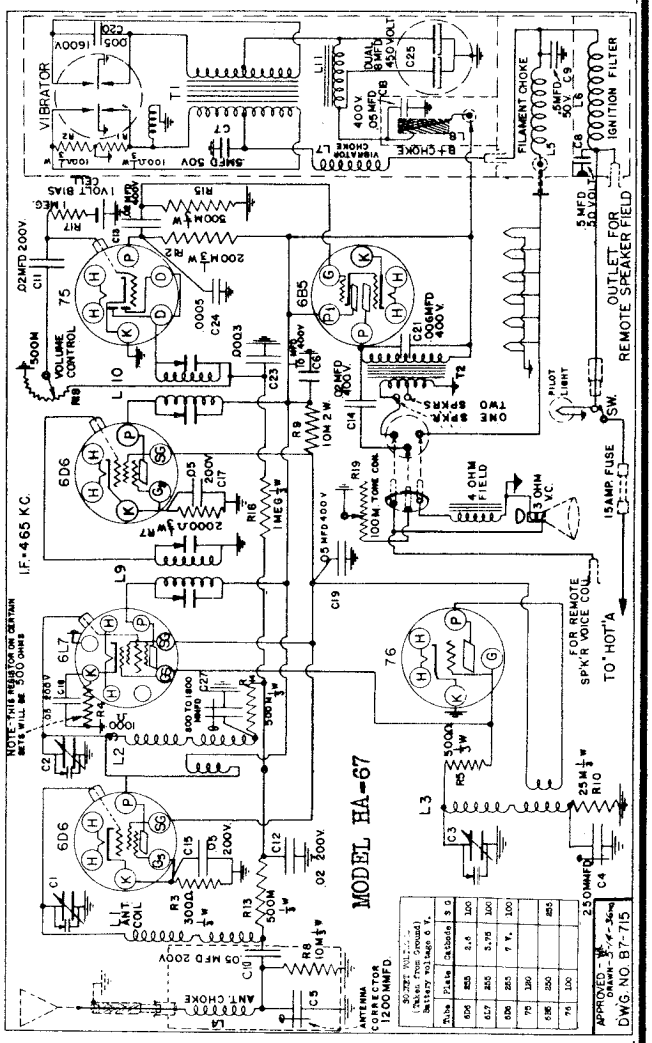

NOTE: WIRES SUPPLIED WITH TUNER ARE 12 INCHES LONG, CUT THESE LEADS SHOULD BE AS SHORT AS POSSIBLE. TO PROPER LENGTH;

INSTRUCTIONS FOR HETRO TUNERS
Models A and B

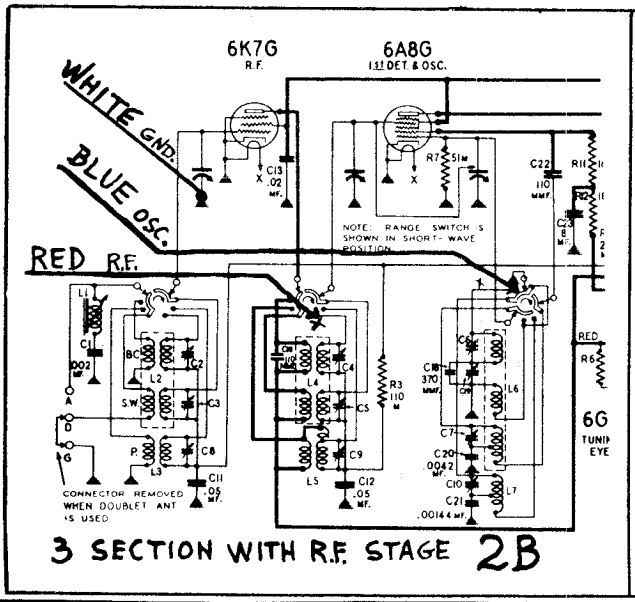

3 SECTION WITH R.F. STAGE 2B

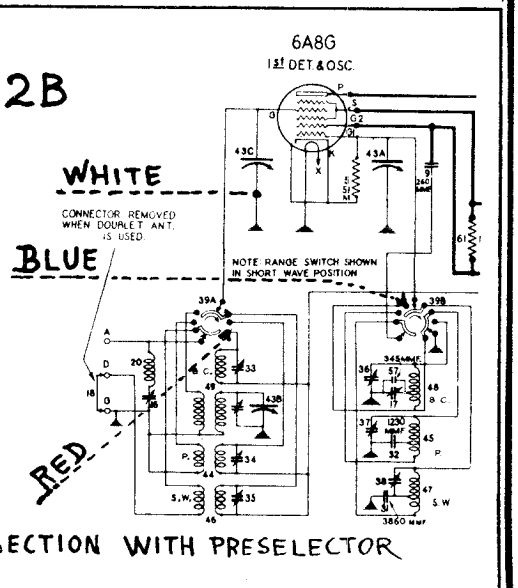

3 SECTION WITH PRESELECTOR

©John F. Rider, Publisher

HETRO ELECTRICAL INDUSTRIES

Method 1 -- Connect wire with RED TRACER to ANTENNA section of tuning condenser; BLUE TRACER to OSCILLATOR section of tuning condenser. WHITE wire to Ground if possible to frame or Ground lug on the tuning condenser. All connections should be well soldered. For sets with 2 section variable condenser

Method 1B - Recommended for sets with short wave bands (2 section condenser) Connect RED TRACER to the grid terminal of Broadcast band antenna coil. BLUE TRACER wire to the grid terminal of the Broadcast band oscillator coil. These connections may be made at the coils or at the wave band switch, whichever is shorter. WHITE wire to Ground if possible to frame or Ground lug on the tuning condenser. By using this method, the tuner is only connected to the circuit when the waveband switch is in the Broadcast position, and short wave reception and dial calibrations are not affected. NOTE: If tuning coils have all secondary winding in series, this method will revert to #1 which would then be preferable, because it is easier to connect. In this case, we recommend that after the tuner has been installed, that the receiver be realigned with the Master button #"6" pushed in; this applies particularly to the short wave band.

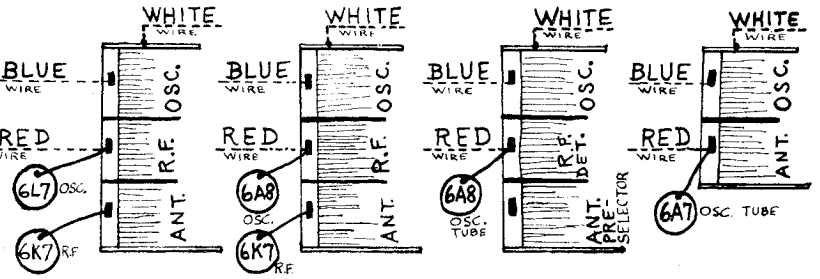

ADJUSTMENT

Set band selector switch to "Broadcast" position and turn station selector tuning control toward higher kilocycle readings (i.e. 550 toward 1600) as far as it will go. (Rotor plates of tuning condenser entirely out). The stations desired should be decided upon as this will determine which button should be used. Buttons Number 1 and 2 as indicated in Figure 2, are used for stations whose transmitting frequencies are between 540KC and 800KC. Button 3 is for stations whose frequencies are between 700 and 1100KC. Button 4 is for stations whose frequencies are between 900KC and 1300KC. Button 5 is for those stations whose frequencies are above 1100KC. These ranges may be altered slightly up or down.

Starting with the first position, fully depress button 1. Check if tuning condenser is open as far as it will go. (i.e. that is toward the extreme high frequency end of the dial).

With a screw driver (insulated or bakelite if possible) turn adjusting screw 1-O (oscillator) until the desired station is heard, then turn screw 1-A (antenna) until the station is heard with maximum volume. On sets using tuning eye, adjustment can be made for maximum closing of the eye.

DO NOT FORCE the screws as the threads may be sheared and rendered useless. This may happen if you do not observe what range the station falls into, and thus use the wrong push button

Proceed with button 2 in a similar way, first pressing in button 2 until the previous button is released. Adjust corresponding trimmers as described above. Buttons, 3, 4, and 5 are adjusted in a similar manner using trimmers 3-O and 3A for the third button; 4-O and 4-A for the fourth button, etc.

The station call letters from the sheet of call letters provided, can now be inserted in the escutcheon slots.

OPERATION

To operate the automatic tuning control, turn station selector knob toward the highest frequency reading (highest KC dial reading), until the stop position is reached. Then depress the button corresponding to the station desired.

For manual tuning, press the Black button (Number 6) which releases the automatic tuner and proceed to tune stations in the usual manner with the station selector knob.

Do not attempt to press more than one button at a time as this will not tune any additional stations. Although this will not in any way injure the unit, it may result in squealing and excessive interference.

The Manual tuning control should not be used when any of the station tuning buttons are pushed in, because different stations other than those originally selected will be received when pushing the different buttons; in some cases this may be desirable.

THE BLACK BUTTON SHOULD ALWAYS BE "IN" WHENEVER THE REGULAR TUNING KNOB IS USED TO SELECT THE STATIONS. The Automatic Tuning unit will not operate unless the pointer on the dial is turned as far as it will go towards the high numbers on the dial.

CAUTION

It is important that the adjustments be carefully made otherwise the reception of the radio station will be distorted and lacking in volume. It is advisable to readjust all of the trimmers a few days after the initial setting to compensate for any "drift" due to room temperature, humidity, and metal fatigue.

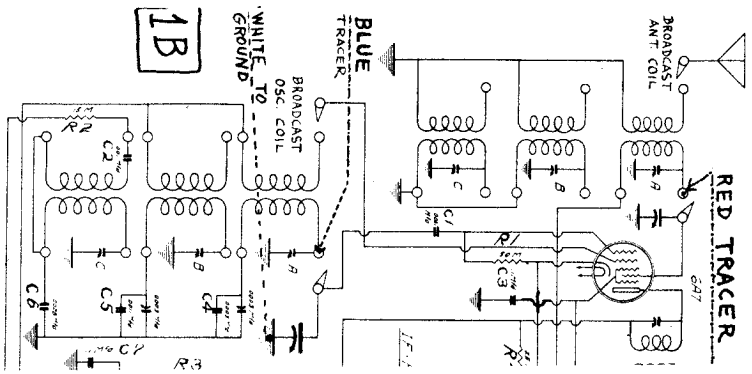

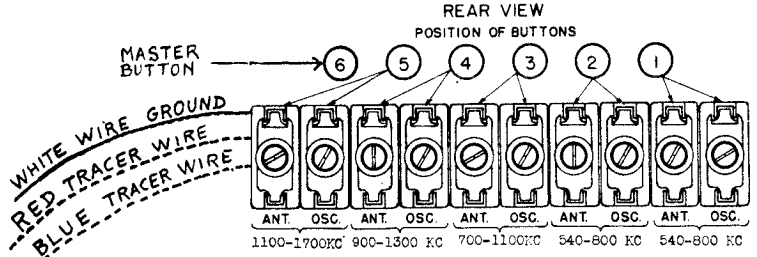

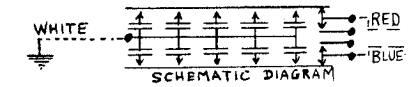

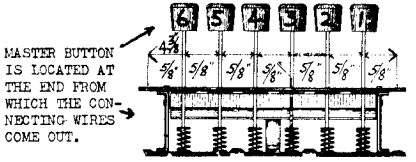

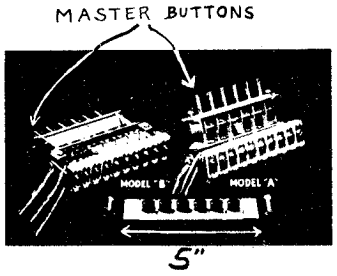

©John F. Rider, Publisher

©John F. Rider, Publisher

HETRO ELECTRICAL INDUSTRIES

MODELS H85, HP85, H93, HP93
8 TUBE A.C. 16.6-555 METERS

Date 2/2/38

FOR DATA ON MODEL A TUNER, SEE INDEX

MODELS H85,H93,HP85,HP93 Schematic,Voltage,Parts Phono.Circuit

TYPE "A" PUSH BUTTON IN MODELS HP85, HP93

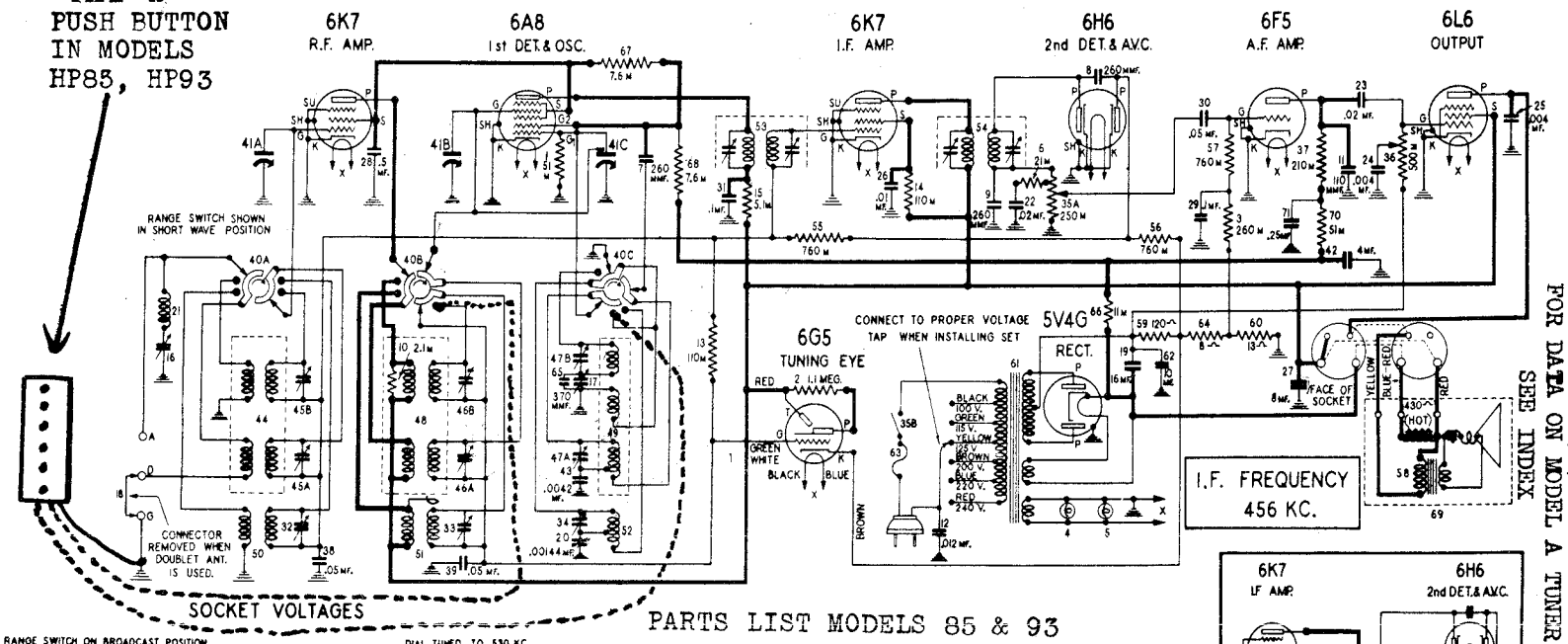

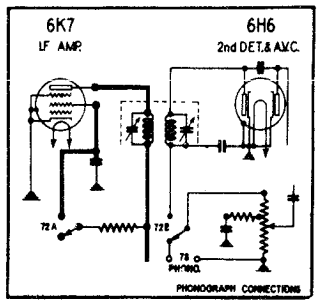

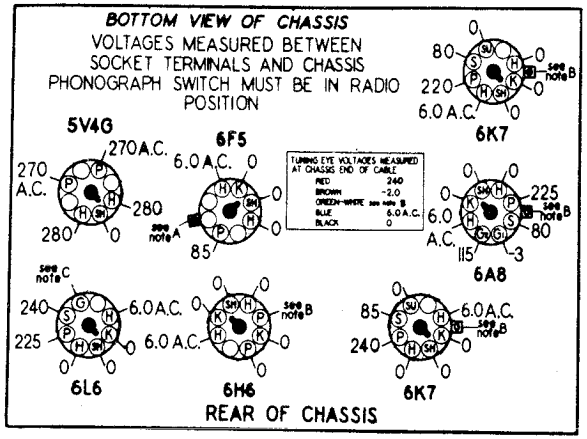

PARTS LIST MODELS 85 & 93

Diagram Number	Part Number	Description
1	1210116	51,000 ohm 1/4 watt carbon resistor
2	1209885	1.1 megohm 1/4 watt carbon resistor
3	1210117	260,000 ohm 1/4 watt carbon resistor
4-5	1209000	Pilot lamp No. 40, 6-8 volts
6	1210682	21,000 ohm 1/4 watt carbon resistor
7-8-9	1211432	260 mmfd. mica condenser
10	1212020	2,100 ohm 1/4 watt carbon resistor
11	1211430	110 mmfd. mica condenser
12	1211339	.012 mfd. shielded condenser
13-14	1209883	110,000 ohm 1/4 watt carbon resistor
15	1211066	5,100 ohm 1/4 watt carbon resistor
16	1211337	Wave trap condenser
17	1211337	Padding condenser
18	1211432	Ground connector
19	1211972	16 mfd. 400 volt electrolytic condenser
20	1211333	.00144 mfd. mica condenser
21	1211408	Antenna trap coil
22-23	1211435	.02 mfd. 400 volt paper condenser
24	1211436	.004 mfd. 400 volt paper condenser
25	1211966	.004 mfd. 750 volt paper condenser
26	1211437	.01 mfd. 400 volt paper condenser
27	1211870	8 mfd. 350 volt electrolytic condenser
28	1211992	.5 mfd. 150 volt paper condenser
29	1211435	.1 mfd. 150 volt paper condenser
30	1211440	.05 mfd. 200 volt paper condenser
31	1211441	.1 mfd. 300 volt paper condenser
32-33-34	1211336	Trimmer condenser
35A / 35B	1211936	Volume control (250,000 ohms A.C. line switch
36	1211398	Tone control (500,000 ohms)
37	1210119	210,000 ohm 1/4 watt carbon resistor
38-39	1211442	.05 mfd. 150 volt condenser (low loss)
40A to C	1211464	Range switch
41A to C	1211932	Gang condenser
42	1211931	4 mfd. 250 volt electrolytic condenser
43	1211334	.0042 mfd. mica condenser
44	1211409	Antenna coil & shield (530 to 1750 KC.) and (5.6 to 17.5 MC.) bands; with trimmer
45A-45B / 46A-46B / 47A-47B	1211496	Trimmer condenser
48	1211410	R.F. coil & shield (530 to 1750 KC.) and (5.6 to 17.5 MC.) bands; with trimmer
49	1211411	Oscillator coil & shield (530 to 1750 KC.) & (5.6 to 17.5 MC.) bands; with trimmer
50	1211413	Antenna coil assembly (1.6 to 5.4 MC.) with trimmer
51	1211412	R.F. coil assembly (1.6 to 5.4 MC.) with trimmer
52	1211414	Oscillator coil assem. (1.6 to 5.4 MC.) with trimmer
53	1211930	1st I.F. transformer
54	1211929	2nd I.F. transformer
55-56-57	1211136	760,000 ohm 1/4 watt carbon resistor
58	1211963 / 1211945	Output transformer for 1211965 speaker / Output transformer for 121109 speaker
59	1211970	120 ohms 2 watt carbon resistor
60	1211971	13 ohms 1/2 watt carbon resistor
61	1211958	Universal power transformer 100-250 volts 25-133 cycles
62	1211455	10 mfd. 25 volt electrolytic condenser
63	1211993 / 145510	Fuse 1.5 amp. (100-125 volts) / Fuse 1 amp. (200-240 volts)
64	1211988	8 ohm 1/2 watt wire wound resistor
65	1211434	370 mmfd. mica condenser
66	1211998	11,000 ohm 1 watt carbon resistor
67	1212024	7,600 ohm 1/2 watt carbon resistor
68	1212025	7,600 ohm 1 watt carbon resistor
69	1211965 / 1211109	8 inch dynamic speaker / 12 inch dynamic speaker
70	1210116	51,000 ohm 1/4 watt carbon resistor
71	1207931	.25 mfd. 200 volt paper condenser
72A-72B	1211869	Phonograph toggle switch
73	1211670	Phonograph terminal strip

IMPORTANT: Use a high resistance voltmeter of 1000 ohms per volt.

NOTE A: The grid bias for the 6F5 is -1.3 volts measured across resistor 60.

NOTE B: The grid bias for the 6A8, 6K7's, and the anode voltage of the A.V.C. section of the 6H6 is -2.0 volts measured across resistors 60 and 64.

NOTE C: The grid bias for the 6L6 output tube is -13.0 volts measured across resistor 59, 64 and 60.

MODELS H85,H93,HP85,HP93
Socket,Trimmers,Alignment
Parts

HETRO ELECTRICAL INDUSTRIES

SERVICE DATA MODELS H85, HP85, H93, Hp93. 8 TUBE A.C. 16.6-555 METERS

CALIBRATION AND ALIGNMENT

ALIGNING EQUIPMENT: For proper alignment, an output meter and an accurately calibrated oscillator with a tuning range from 456 KC. to 16 MC. are required.

Connect the output meter from the plate of the output tube to chassis. A convenient point to make the plate connection is to the yellow wire on speaker socket.

ALIGNING THE I. F. AMPLIFIER: Turn the volume control to maximum volume position and keep it in this position throughout the entire alignment procedure. Turn the range switch to the broadcast position (fully clockwise).

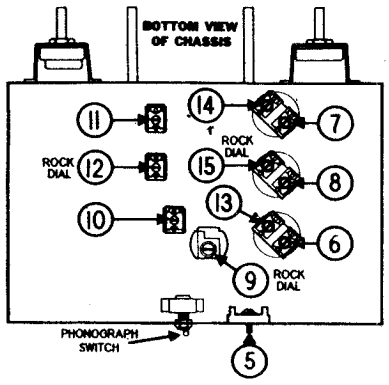

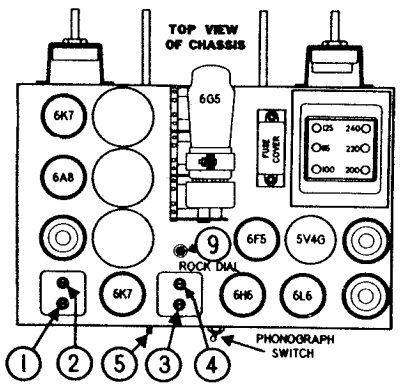

Connect the test oscillator output leads to the 6A8 control grid and chassis with a **.1 mfd. condenser in series with the oscillator output.** Set the oscillator to exactly 456 KC. Set the receiver dial at any point where it has no tuning effect on the oscillator signal.

Adjust the four I.F. trimmers, Nos. 1, 2, 3 and 4, for maximum output meter deflection, then repeat the trimmer adjustment.

WAVE-TRAP ADJUSTMENT: The wave-trap adjusting trimmer, No. 5, is located on the back of the chassis. Leave the test oscillator at 456 KC. Connect the oscillator output to the A and G terminals with a 400 ohm resistor in series with the A terminal and oscillator output. Then adjust the wave-trap trimmer No. 5 for **minimum** output. If some particular station with a frequency near 456 KC. causes code interference, it may be desirable to adjust the wave-trap on the actual frequency of the interfering station.

BROADCAST BAND CALIBRATION AND ALIGNMENT: With the gang condenser in full mesh, the dial pointer should be on the white horizontal line below 530 KC. on the dial scale. Leave the range switch in the extreme clockwise position, and leave the test oscillator connected to the A and G terminals of the receiver through a 400 ohm resistor.

Adjust the test oscillator to exactly 1500 KC. and turn the receiver dial pointer to 1500 KC. on the tuning dial. To calibrate the dial, adjust trimmer No. 6 for maximum output.

Carefully tune the receiver to the signal and adjust trimmers Nos. 7 and 8 for maximum output.

Adjust the test oscillator to 600 KC. and tune the receiver to the signal. Adjust trimmer No. 9 for maximum output. Then try to increase the output meter reading by detuning No. 9 slightly and retuning the receiver dial. If the output goes down, detune the trimmer in the opposite direction. Continue detuning the trimmer and retuning the receiver dial until maximum output meter deflection is secured. This operation is commonly known as "rocking" and when performed as described will give maximum selectivity and sensitivity even though the dial may be slightly off calibration at 600 KC.

BAND NO. 2 CALIBRATION AND ALIGNMENT: Turn the range switch to the center position.

Adjust the test oscillator to exactly 5.0 MC. and turn the receiver dial pointer to exactly 5.0 MC. on the tuning dial.

To calibrate the dial, adjust trimmer No. 10 for maximum output. If two peaks are found, the proper one is that with the trimmer screw farthest **out.**

Carefully tune the receiver to the signal and adjust trimmers Nos. 11 and 12 for maximum output. Then try to increase the output by detuning No. 12 slightly and retuning the receiver dial. Continue detuning No. 12 and retuning the dial until the output meter deflection is a maximum. Then readjust No. 11 for maximum output.

BAND NO. 3 CALIBRATION AND ALIGNMENT: Turn the range switch to the extreme counter-clockwise position. Be sure the D and G terminals on the antenna terminal strip are connected together.

Set the test oscillator to 16 MC. and turn the receiver dial pointer to exactly 16 MC. on the tuning dial.

To calibrate the dial, adjust trimmer No. 13 for maximum output. Check to see that it has been adjusted to the proper peak by tuning the receiver to approximately 15.1 MC. A repeat signal should be heard at this point. If none is present, even with greatly increased oscillator output, retune the receiver to 16 MC. and adjust trimmer No. 13 to the proper peak with the trimmer screw farther **out.**

Carefully tune the receiver to the signal and adjust trimmers Nos. 14 and 15 to a peak. Then try to increase the output by detuning No. 15 slightly and retuning the dial until a maximum output meter deflection is secured. Then readjust No. 14 for maximum output. Check the adjustment by tuning the receiver to the image at about 15.1 MC. The image should be much weaker than the 16 MC. signal. If the signal at 15.1 MC. dial setting is equal to or stronger than the 16 MC. signal, trimmer No. 15 is not set to the proper peak. Turn the trimmer in a turn or so, then readjust as above.

TRIMMER LOCATIONS

Trimmer Number		Alignment Frequency
1	1st I.F. transformer trimmer	456 KC.
2	1st I.F. transformer trimmer	456 KC.
3	2nd I.F. tranformer trimmer	456 KC.
4	2nd I.F. tranformer trimmer	456 KC.
5	Wave trap trimmer	456 KC.
6	Broadcast oscillator shunt trimmer	1500 KC.
7	Broadcast antenna shunt trimmer	1500 KC.
8	Broadcast detector shunt trimmer	1500 KC.
9	Broadcast oscillator series padder	600 KC.
10	Police oscillator shunt trimmer	5 MC.
11	Police antenna shunt trimmer	5 MC.
12	Police detector shunt trimmer	5 MC.
13	Short wave oscillator shunt trimmer	16 MC.
14	Short wave antenna shunt trimmer	16 MC.
15	Short wave detector shunt trimmer	16 MC.

MISCELLANEOUS PARTS

Part Number	Description
1211450	Terminal strip G.D.A.
1211488	Shaft for range selector
1211484	Tuning indicator cable & plug
1211538	#14x1-1/4 chassis mounting screw
1211539	Rubber chassis mounting bushing
1211549	Knob (used with tone & volume control)
1211550	Knob (for range switch)
1211551	Knob (front section) for tuning control
1211552	Knob (rear section) for tuning control
1211935	Felt washer (for rear of tuning knob)
1211936	Felt washer (for back of knobs)
1211937	Embossed washer (used with 1211972 electrolytic condenser)
1211940	Bracket for range selector shaft
1211948	#2x3/8 R.H.W. screw (for escutcheon)
1211949	Link and lever assembly
1211957	Escutcheon for magic eye
1211984	#1x1/4 R.H.W. screw for eye escutcheon
120386	Flat steel mounting washer

TUNING DRIVE AND DIAL PARTS

Part Number	Description
1211461	Spring washer (for planetary drive)
1211462	Dual ratio planetary drive
1211469	Idler gear tension spring
1211489	Dial lamp shield
1211493	Dial lamp socket
1211494	Compression spring for band indicator
1211522	Escutcheon with glass
1211697	Dial scale retaining clip
1211941	Idler gear and pinion assembly
1211942	Shaft for second pointer
1211943	Dial disc and bushing assembly
1211944	Dial ring, bracket and shaft assembly
1211950	Band indicator and link assembly
1211951	Pointer (second hand)
1211952	Pointer & stud assembly
1211955	Dial background
1211956	Bracket and light bracket assembly
1211994	Idler gear tension spring
1212008	Dial scale

©John F. Rider, Publisher

©John F. Rider, Publisher

MODELS H87, HP87. 7 TUBES 16.6 555 METERS

Date 2/2/58

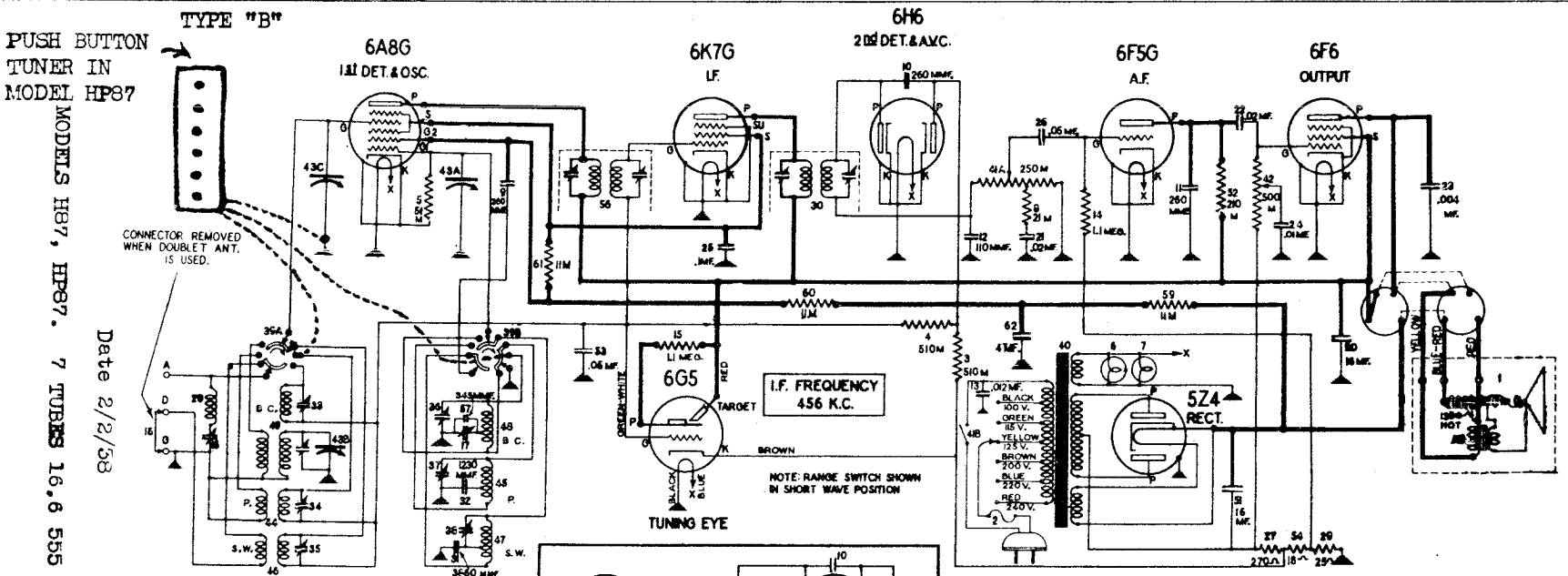

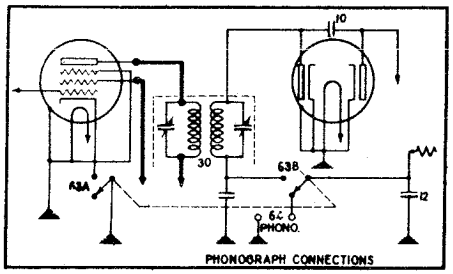

PARTS LIST H87, HP87

Diagram Number	Part Number	Description
1	1211426	6-8 inch Dynamic speaker
2	145510	Fuse, 1 amp. (use on line voltage of 100 to 125 volts)
2	1211989	Fuse, 3/4 amp. (use on line voltages of 200 to 240 volts)
3-4	1210470	510,000 ohm 1/4 watt carbon resistor
5	1210116	51,000 ohm 1/4 watt carbon resistor
6-7	1209000	Pilot lamp (6 to 8 volts)
8	1210882	21,000 ohm 1/4 watt carbon resistor
9-10-11	1211432	260 mmfd. mica condenser
12	1211430	110 mmfd. mica condenser
13	1211338	.012 mfd. 1000 volt shielded condenser
14-15	1209885	1.1 megohn 1/4 watt carbon resistor
16	1211337	20 to 120 mmfd. mica wave trap trimmer
17	1211337	20 to 120 mmfd. mica padding trimmer
18	1211422	Ground jumper for antenna strip
20	1211408	456 KC. wave trap coil
21-22	1211435	.02 mfd. 400 volt paper condenser
23	1211966	.004 mfd. 750 volt paper condenser
24	1211437	.01 mfd. 400 volt paper condenser
25	1211438	.1 mfd. 150 volt paper condenser
26	1211440	.05 mfd. 200 volt paper condenser
27	1209463	270 ohm 1 watt carbon resistor
29	1211326	25 ohm 1/2 watt wire wound resistor
30	1211405	2nd I.F. transformer with shield
31	1211331	3860 mmfd. mica condenser
32	1211332	1230 mmfd. mica condenser
33-34-35 / 36-37-38	1211336	Dual trimmer condenser
39A & B	1211394	Range switch
40	1211668	Universal power transformer 100 to 240 volts, 25-133 cycles
41-A / 41-F	1211396	Volume Control 250,000 ohm A.C. line switch

Diagram Number	Part Number	Description
42	1211398	Tone control (500,000 ohms)
43A to C	1211395	Gang Condenser
44	1211404	Antenna coil with trimmer (1.6 to 5.4 MC.)
45	1211399	Oscillator coil (1.6 to 5.4 MC.)
46	1211402	Antenna coil with trimmer (5.6 to 17.5 MC.)
47	1211401	Oscillator coil with trimmer (5.6 to 17.5 MC.)
48	1211403	Oscillator coil (530 to 1750 KC.)
49	1211400	Antenna coil with trimmer (530 to 1750 KC.)
50	1211444	16 mfd. 300 volt electrolytic condenser
51	1211445	16 mfd. 400 volt electrolytic condenser
52	1210119	210,000 ohm 1/4 watt carbon resistor
53	1211442	.05 mfd. 150 volt condenser (low loss)
54	1211671	18 ohm 1/2 watt wire wound resistor
55	1211467	Output transformer for 1211426 spkr.
56	1211488	1st I.F. transformer
57	1211576	345 mmfd. mica condenser
59-60	1211998	11,000 ohm 1 watt carbon resistor
61	1211999	11,000 ohm 1/2 watt carbon resistor
62	1212000	4 mfd. 250 volt electrolytic condenser
63A & B	1211669	Phonograph toggle switch
64	1211670	Phonograph terminal strip.

FOR DATA ON MODEL B TUNER, SEE INDEX

SOCKET VOLTAGES

VOLUME CONTROL ON FULL — ANTENNA GROUNDED

RANGE SWITCH ON BROADCAST POSITION — DIAL TUNED TO 530 KC.

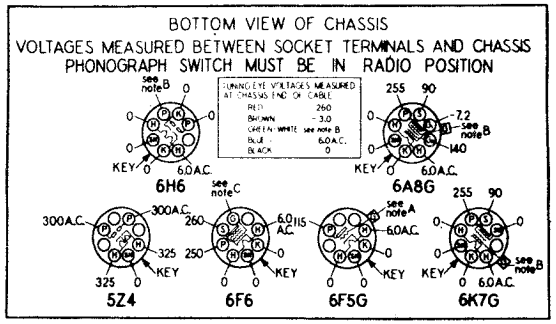

REAR OF CHASSIS

IMPORTANT: Use a high resistance voltmeter of 1000 ohms per volt.

NOTE A: The grid bias for the 6F5G is -1.3 volts measured across resistor 29.

NOTE B: The grid bias for the 6A8G, 6K7G, and the anode voltage of the A.V.C. section of the 6H6 is -3.0 volts measured across resistors 29 and 54.

NOTE C: The grid bias for the 6F6 output tube is -17.0 volts measured across resistors 29, 54 and 27.

MODELS H87,HP87
Socket,Trimmers
Alignment,Parts

HETRO ELECTRICAL INDUSTRIES

SERVICE DATA FOR MODELS H87, HP87.

CALIBRATION AND ALIGNMENT

ALIGNING EQUIPMENT: For proper alignment, an output meter and an accurately calibrated oscillator with a tuning range from 456 KC. to 16 MC. are required.

Connect the output meter from the plate of the output tube to chassis. A convenient point to make the plate connection is to the yellow wire on the speaker socket.

ALIGNING THE I. F. AMPLIFIER: Turn the volume control to maximum volume position and keep it in this position throughout the entire alignment procedure. Turn the range switch to the broadcast position (fully clockwise).

Connect the test oscillator output leads to the 6A8 control grid and chassis with a .1 mfd. condenser in series with the oscillator output. Set the oscillator to exactly 456 KC. Set the receiver dial at any point where it has no tuning effect on the oscillator signal.

Adjust the four I.F. trimmers, Nos. 1, 2, 3 and 4, for maximum output meter deflection, then repeat the trimmer adjustment.

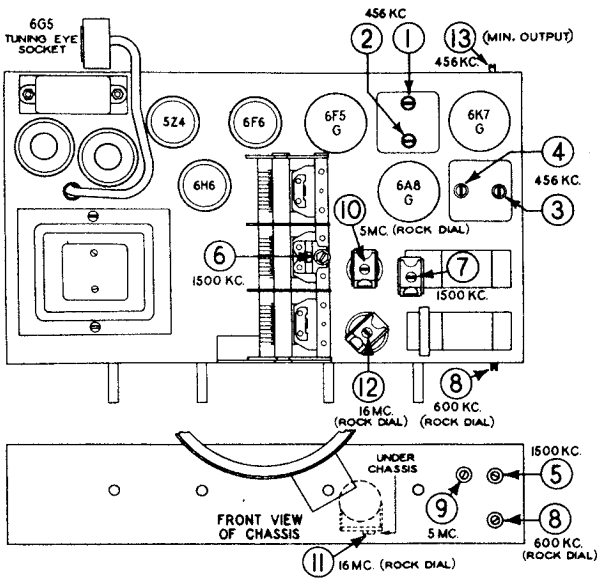

TRIMMER LOCATIONS

Trimmer Number		Alignment Frequency
1.	2nd I.F. transformer trimmer	456 KC.
2.	2nd I.F. transformer trimmer	456 KC.
3.	1st I.F. transformer trimmer	456 KC.
4.	1st I.F. transformer trimmer	456 KC.
5.	Broadcast oscillator shunt trimmer	1500 KC.
6.	Broadcast antenna shunt trimmer	1500 KC.
7.	Broadcast detector shunt trimmer	1500 KC.
8.	Broadcast oscillator series padder	600 KC.
9.	Police oscillator shunt trimmer	5 MC.
10.	Police antenna shunt trimmer	5 MC.
11.	Short wave oscillator shunt trimmer	16 MC.
12.	Short wave antenna shunt trimmer	16 MC.
13.	Wave-trap trimmer	456 KC.

BROADCAST BAND CALIBRATION AND ALIGNMENT: With the gang condenser in full mesh, the dial pointer should be on the white horizontal line below 530 KC. on the dial scale.

Turn the range switch to the extreme clockwise position and connect the test oscillator output to the A and G terminals of the receiver with a 400 ohm carbon resistor in series with the A terminal and the oscillator output.

Adjust the test oscillator to exactly 1500 KC. and turn the receiver dial pointer to 1500 KC. on the tuning dial. To calibrate the dial, adjust trimmer No. 5 for maximum output.

Carefully tune the receiver to the signal and adjust trimmers Nos. 6 and 7 for maximum output.

Adjust the test oscillator to 600 KC. and tune the receiver to the signal. Adjust trimmer No. 8 for maximum output. Then try to increase the output meter reading by detuning No. 8 slightly and retuning the receiver dial. If the output goes down, detune the trimmer in the opposite direction. Continue detuning the trimmer and retuning the receiver dial until maximum output meter deflection is secured. This operation is commonly known as "rocking" and when performed as described will give maximum selectivity and sensitivity even though the dial may be slightly off calibration at 600 KC.

WAVE-TRAP ADJUSTMENT: The wave-trap adjusting trimmer, No. 13, is located on the back of the chassis. Leave the test oscillator connected to the A and G terminals through a 400 ohm resistor and set the oscillator at 456 KC. Then adjust the wave-trap trimmer No. 13 for minimum output. If some particular station with a frequency near 456 KC. causes code interference, it may be desirable to adjust the wave-trap on the actual frequency of the interfering station.

Check the adjustment of trimmers 5, 6, and 7 at 1500 KC.

BAND NO. 2 CALIBRATION AND ALIGNMENT: Turn the range switch to the center position.

Adjust the test oscillator to exactly 5.0 MC. and turn the receiver dial pointer to exactly 5.0 MC. on the tuning dial.

To calibrate the dial, adjust trimmer No. 9 for maximum output. If two peaks are found, the proper one is that with the trimmer screw farthest out.

Carefully tune the receiver to the signal and adjust trimmer No. 10 for maximum output. Then try to increase the output by detuning No. 10 slightly and retuning the receiver dial. Continue detuning No. 10 and retuning the dial until the output meter deflection is a maximum.

BAND NO. 3 CALIBRATION AND ALIGNMENT: Turn the range switch to the extreme counter-clockwise position. Be sure the D and G terminals on the antenna terminal strip are connected together.

Set the test oscillator to 16 MC. and turn the receiver dial pointer to exactly 16 MC. on the tuning dial.

To calibrate the dial, adjust trimmer No. 11 for maximum output. Check to see that it has been adjusted to the proper peak by tuning the receiver to approximately 15.1 MC. A repeat signal should be heard at this point. If none is present, even with greatly increased oscillator output, retune the receiver to 16 MC. and adjust trimmer No. 11 to the proper peak with the trimmer screw farther out.

Carefully tune the receiver to the signal and adjust trimmer No. 12 to a peak. Then try to increase the output by detuning the trimmer slightly and retuning the dial until a maximum output meter deflection is secured. Check the adjustment by tuning the receiver to the image at about 15.1 MC. The image should be much weaker than the 16 MC. signal. If the signal at 15.1 MC. dial setting is equal to or stronger than the 16 MC. signal, trimmer No. 12 is not set to the proper peak. Turn the trimmer in a turn or so, then readjust as above.

MISCELLANEOUS PARTS

Part Number	Description
1211424	Fuse cover
1211450	Antenna-ground terminal strip
1211484	Tuning indicator cable and plug
1211523	Escutcheon for tuning eye
1211539	Rubber chassis mounting bushing
1211540	#10x1/4 chassis mounting screw
1211548	Knob for band switch
1211549	Knob for volume control
1211554	Knob for tone and tuning control mounting screw)
1211937	Embossed washer for 1211445 electrolytic condenser
1211938	Felt washer for back of knob
1211948	#2x3/8 R.H.W. screw for dial escutcheon
1212027	Tube shield assembly

TUNING DRIVE AND DIAL PARTS

Part Number	Description
1211463	Pointer and stud assembly
1211465	Dial ring and bracket assembly
1211466	Dial disc and bushing assembly
1211489	Dial lamp shield
1211493	Dial lamp socket
1211522	Escutcheon with glass
1211524	Dial scale
1211954	Dial background
1211990	Dial drive shaft
1211991	Dial drive shaft retainer spring

TO ADJUST AUTOMATIC PRESS-A-BUTTON TUNER IN MODELS HP85 & HP93, SEE INSTRUCTIONS SUPPLIED WITH TUNER

©John F. Rider, Publisher

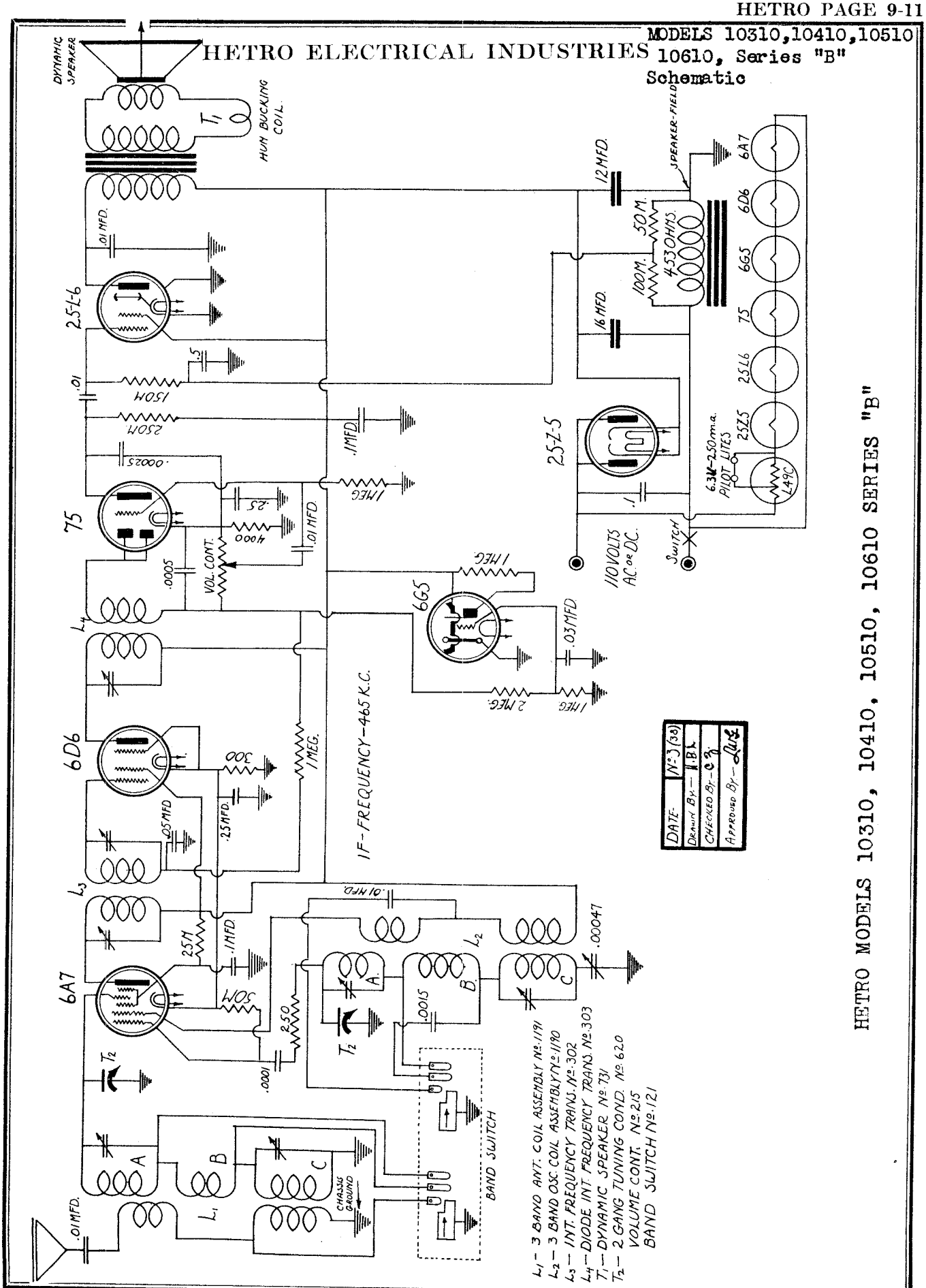

©John F. Rider, Publisher

MODELS H47,H48
Schematic

HETRO ELECTRICAL INDUSTRIES

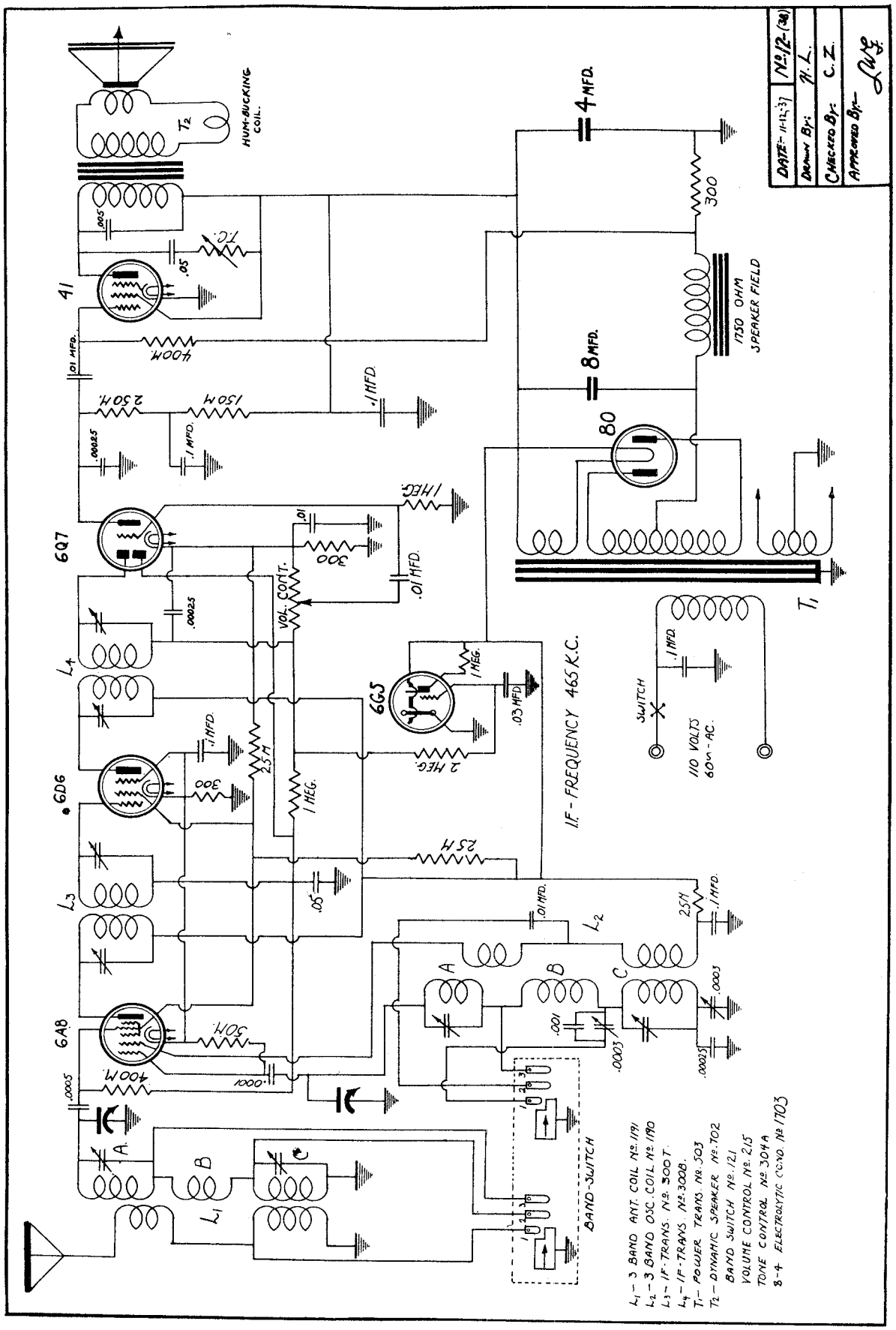

©John F. Rider, Publisher

HETRO ELECTRICAL INDUSTRIES

MODELS 14610,14710,15010
15110,15210
Schematic

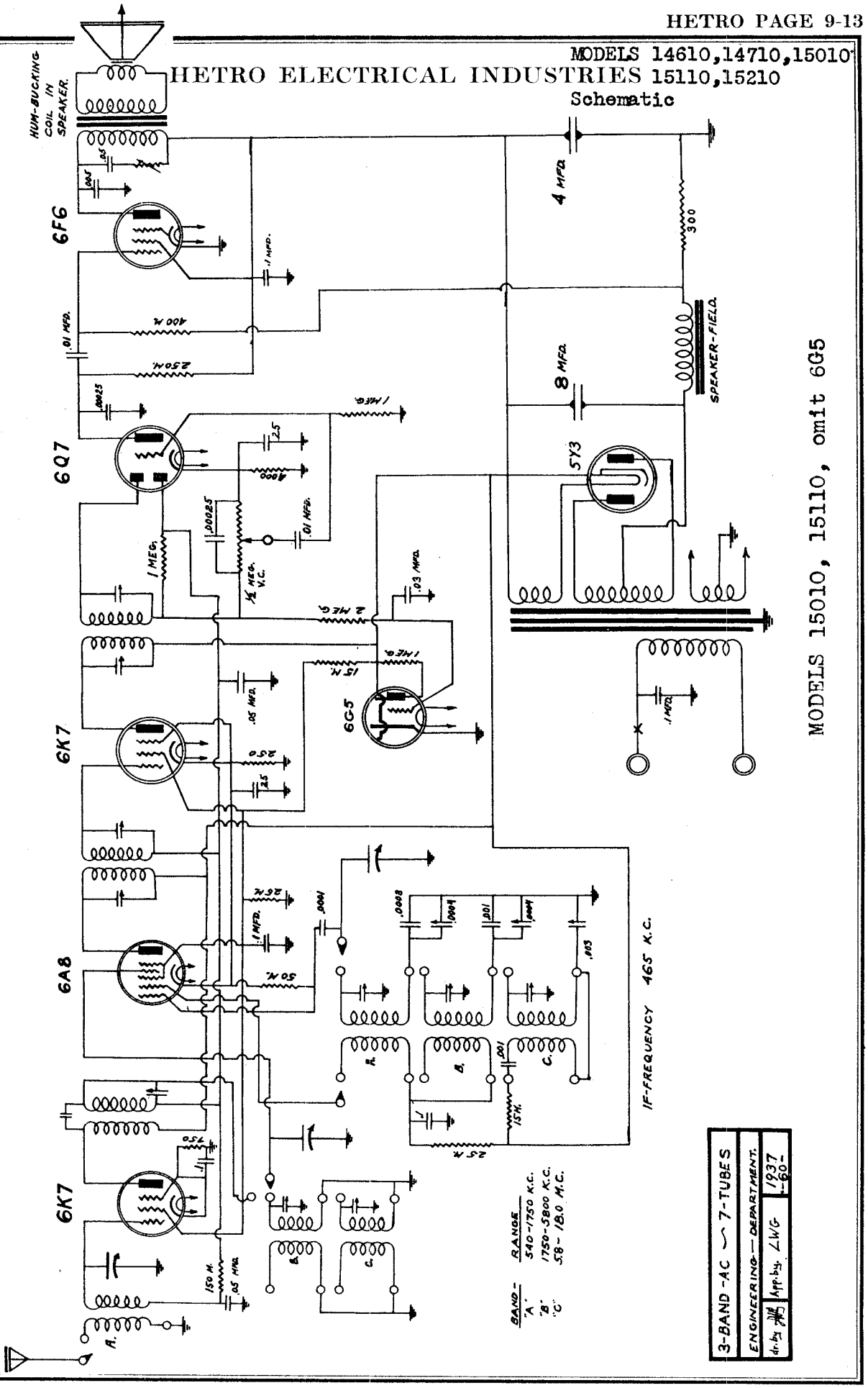

HETRO MODELS 15010, 15110, 14610, 14710, 15210

MODELS 15010, 15110, omit 6G5

©John F. Rider, Publisher

MODELS 14810,14890,
14910,14990
Schematic

HETRO ELECTRICAL INDUSTRIES

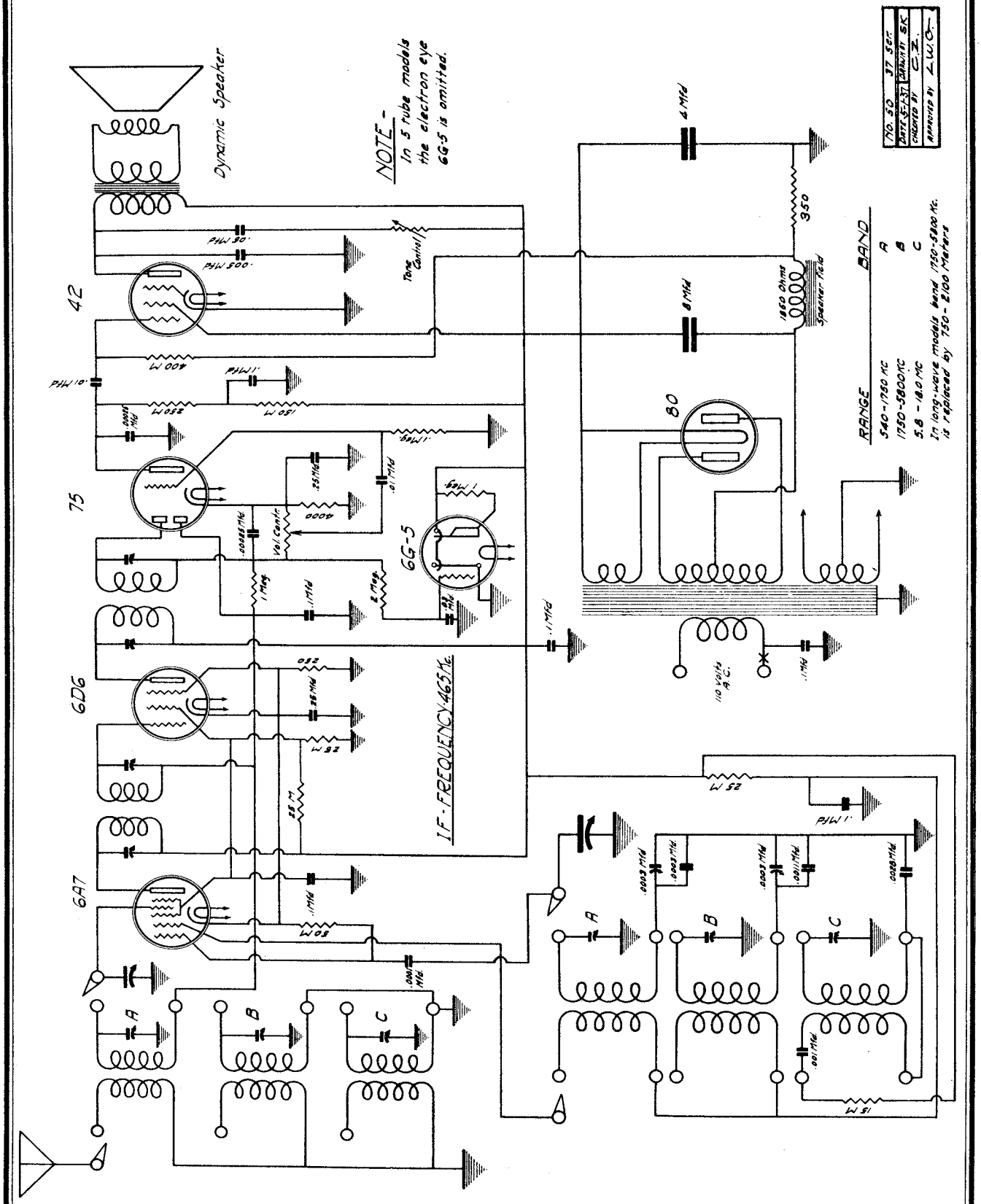

©John F. Rider, Publisher

HERBERT H. HORN

MODEL 4T
MODELS 50,50B
Schematics

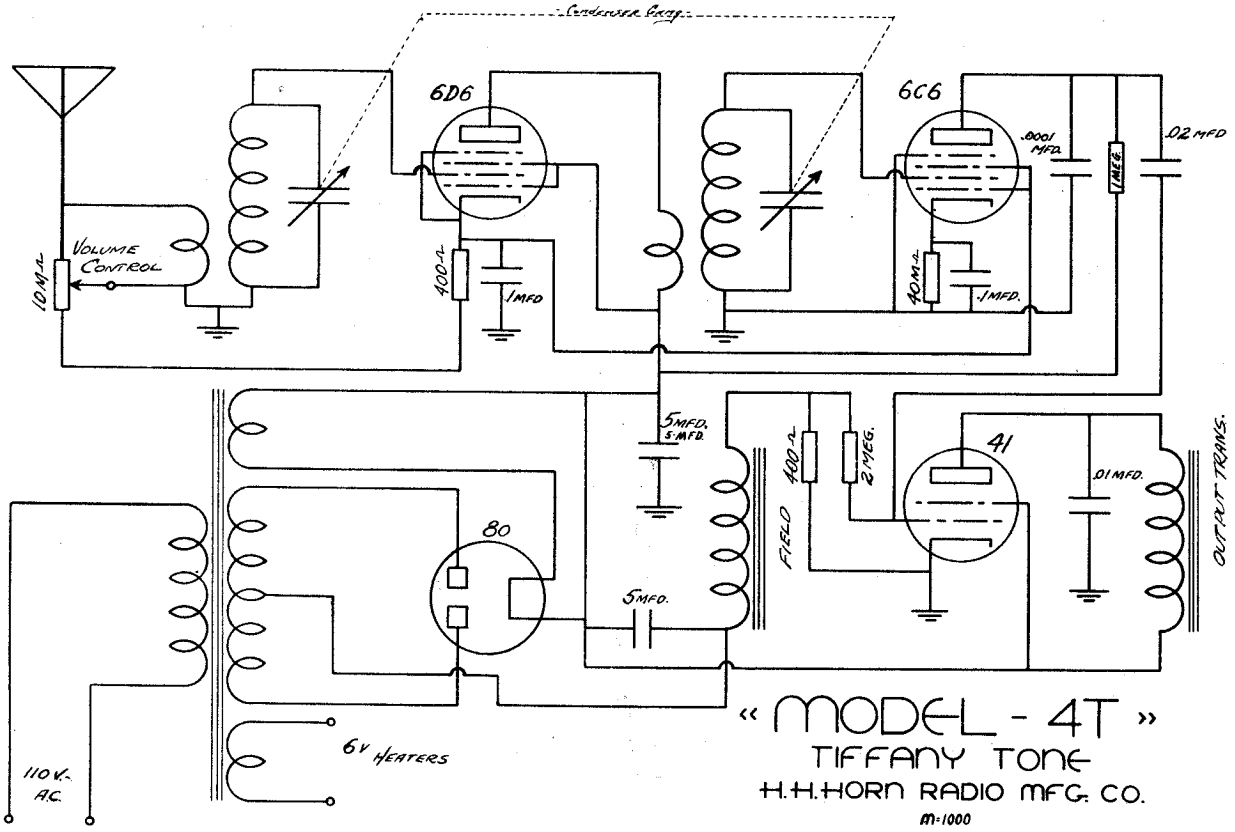

« MODEL - 4T »
TIFFANY TONE
H.H.HORN RADIO MFG. CO.
M=1000

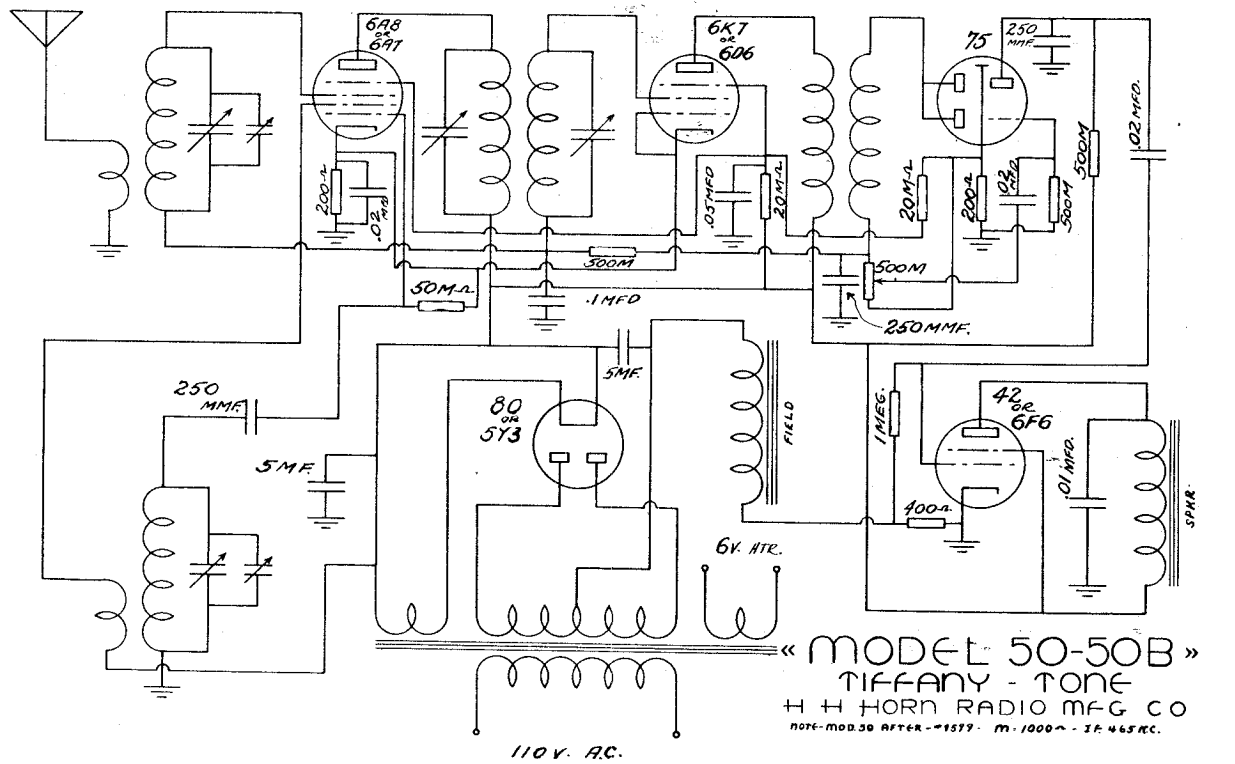

« MODEL 50-50B »
TIFFANY - TONE
H H HORN RADIO MFG CO
NOTE-MOD.50 AFTER-#1577 · M-1000 ~ · I.F. 465 KC.

©John F. Rider, Publisher

MODEL 11A
Schematic

HERBERT H. HORN

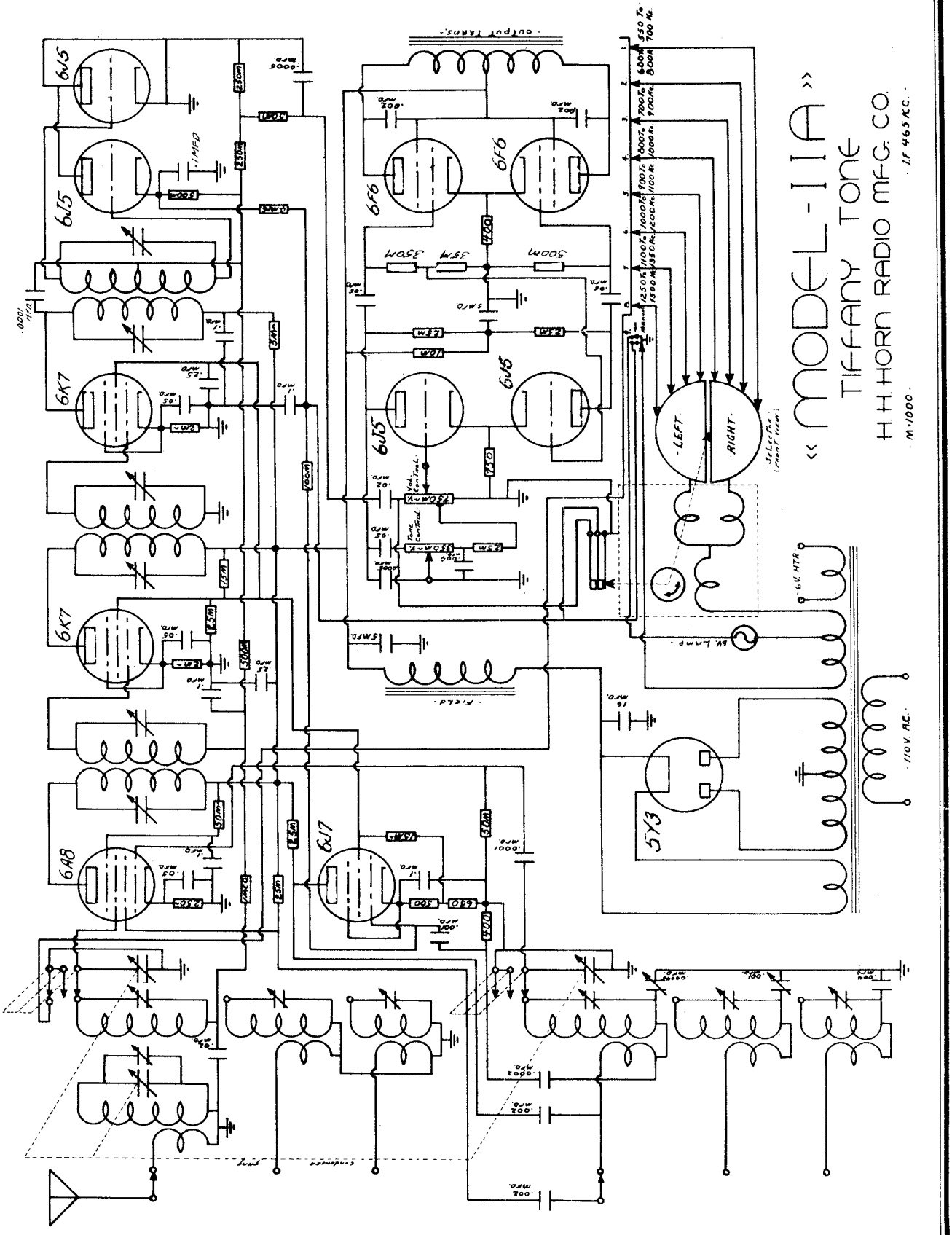

©John F. Rider, Publisher

HERBERT H. HORN

MODEL 67
MODEL 518
Schematics

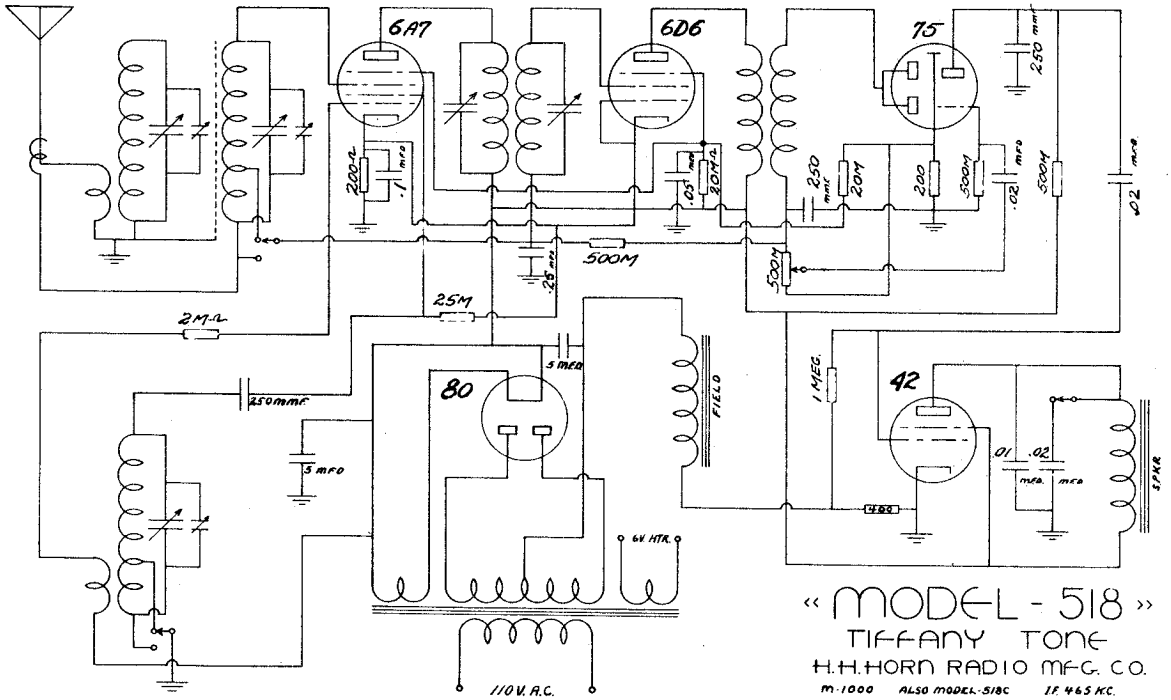

«MODEL-518»
TIFFANY TONE
H.H.HORN RADIO MFG. CO.
M-1000 ALSO MODEL-518C I.F. 465 K.C.

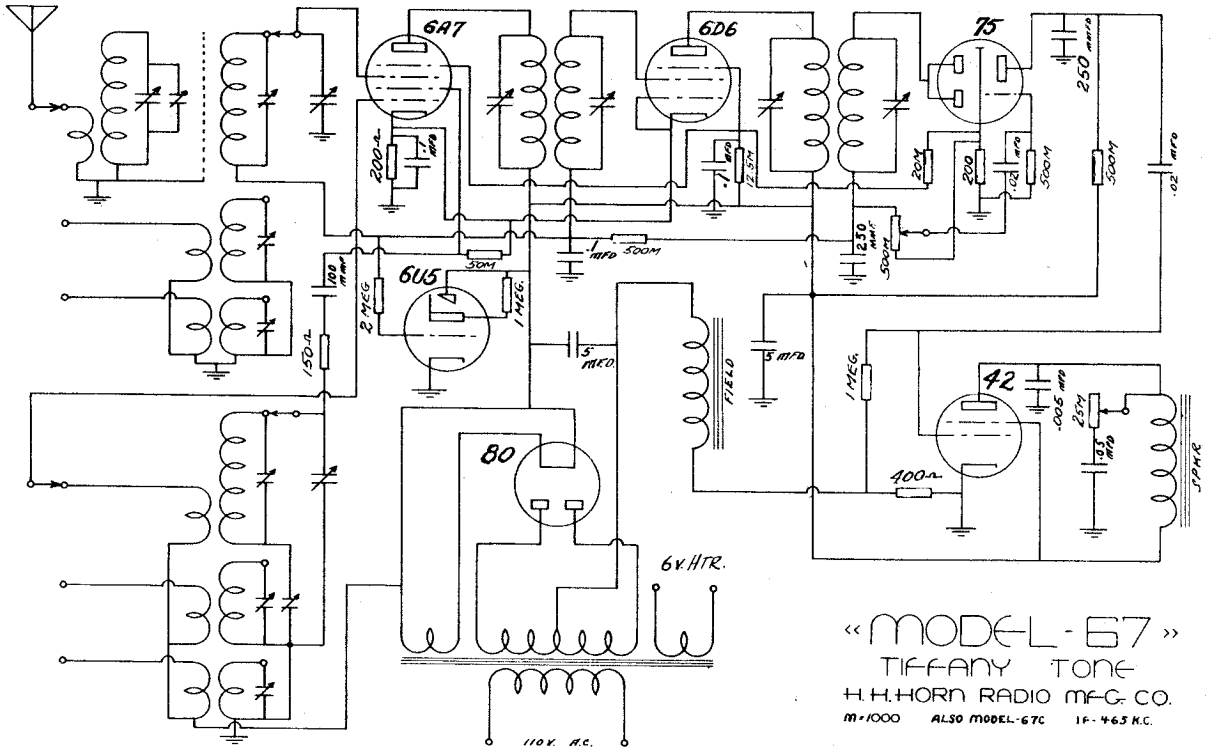

«MODEL-67»
TIFFANY TONE
H.H.HORN RADIO MFG. CO.
M-1000 ALSO MODEL-67C I.F. 465 K.C.

©John F. Rider, Publisher

MODEL 87
MODEL 97
Schematics

HERBERT H. HORN

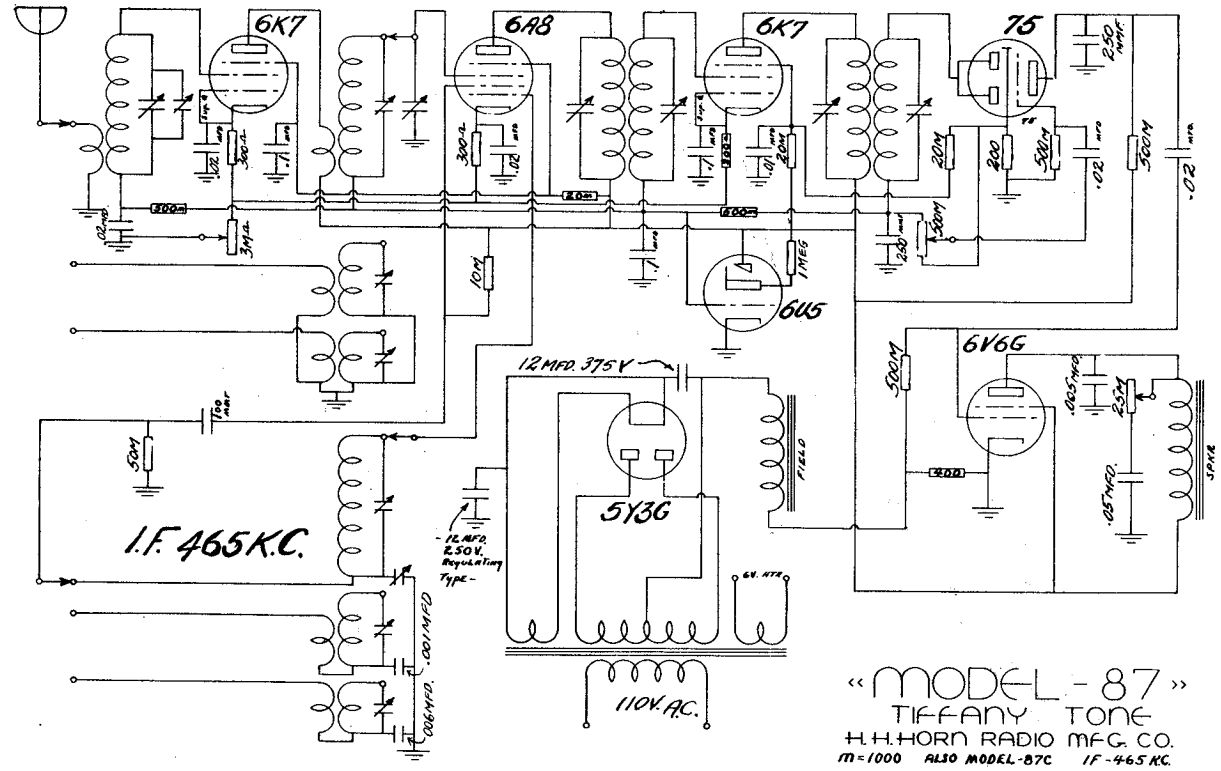

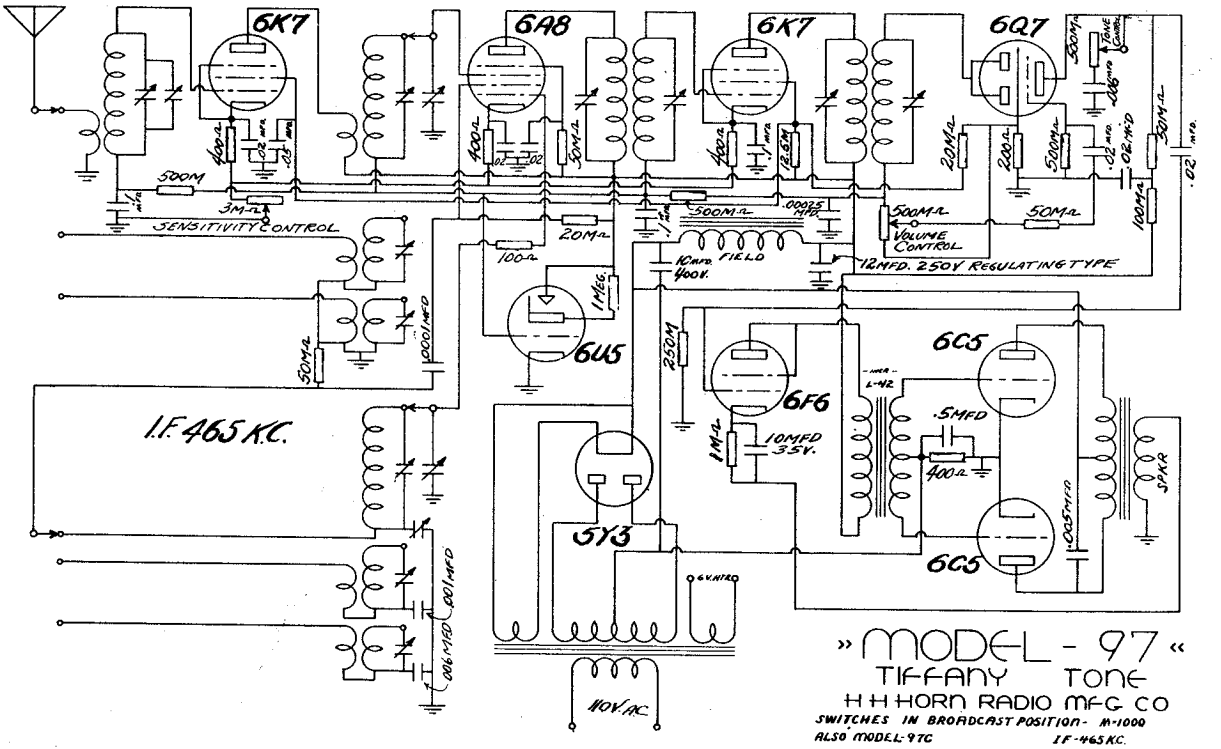

©John F. Rider, Publisher

MODELS E5B,E256,E259
Phono.,Headphone Circuits

HOWARD RADIO CO.

MODEL E5B
Schematic

For Model E259 an auxillary line cord of 200 ohms resistance must be placed in series with the regular cord to use the set on 230 volt line.

For the AC Models, when a universal transformer is being used a separate instruction sheet is enclosed with the receiver showing the right combination of leads for various line voltages.

The diagram below shows the fundamental circuits used for PHONO JACK and HEADPHONE JACK. NOTE: With models that do not have the cathode grounded, the terminal on the jack that would ordinarily be grounded would be common to the cathode return. This also applies to the power tube grid circuit.

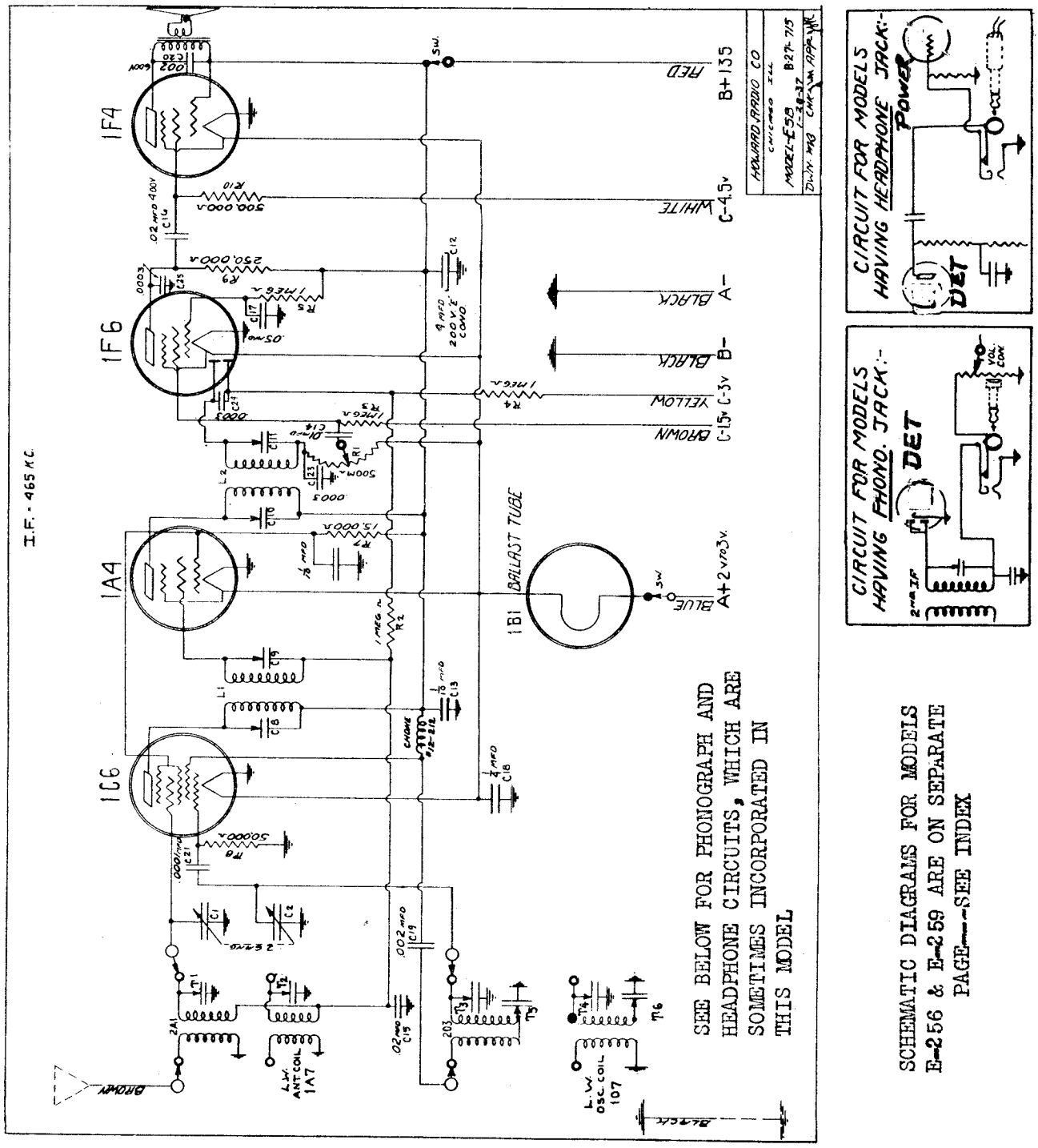

©John F. Rider, Publisher

MODEL E256
MODEL E259
Schematics, Voltage

HOWARD RADIO CO.

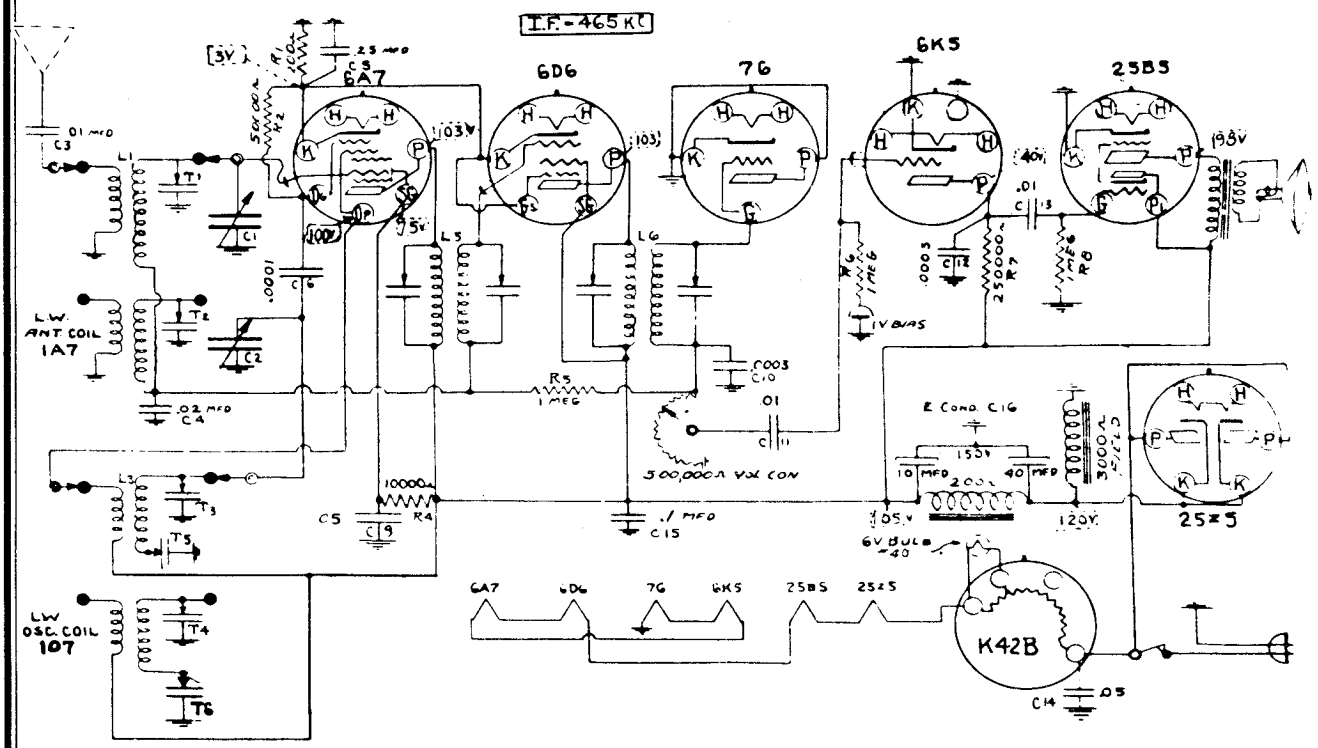

FOR PHONOGRAPH AND HEADPHONE JACK CONNECTIONS, SOMETIMES IN THESE MODELS, SEE PREVIOUS PAGE

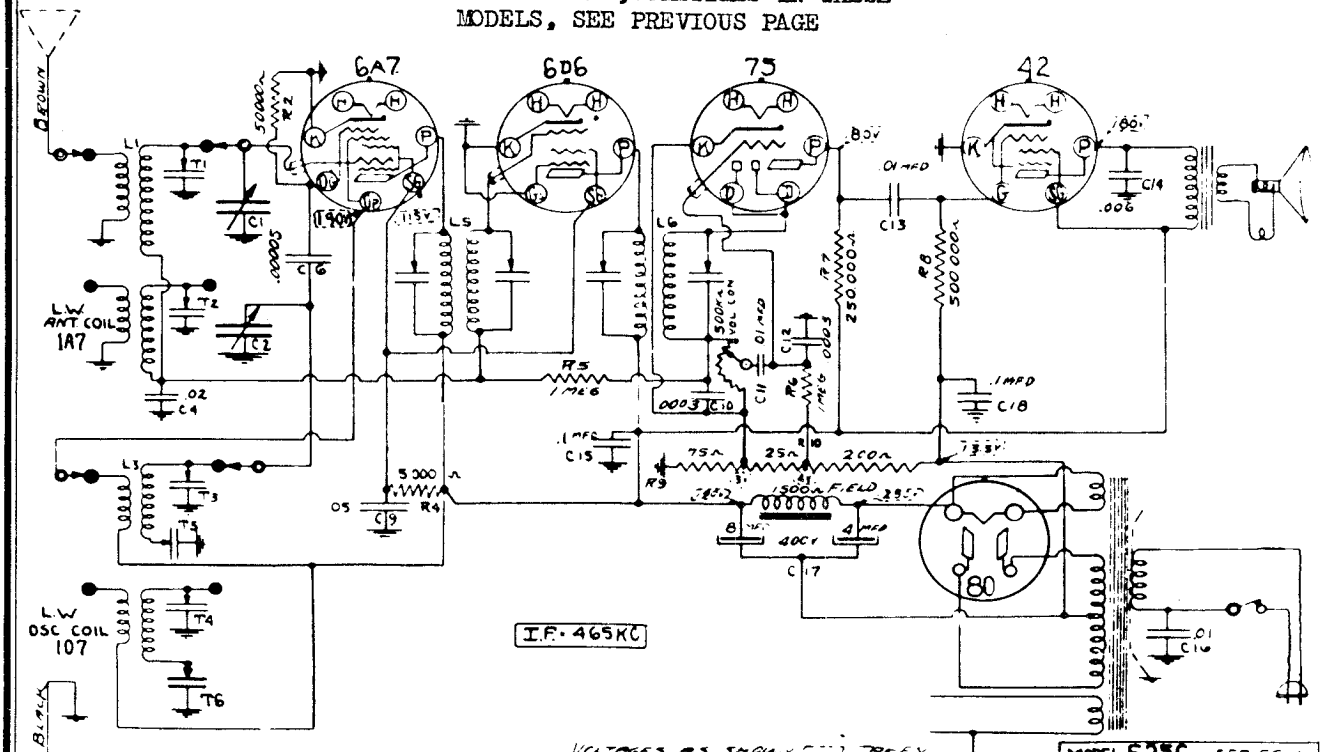

©John F. Rider, Publisher

HOWARD RADIO CO.

MODELS E5B,E256,E259
Trimmers,Alignment

I. THE I. F. STAGES

The intermediate frequency stages are aligned in the usual manner on Models E259 and E59 by feeding 465 KC into the grid of the mixer tube after removing grid cap, placing a series resistor of 500,000 ohms from tube grid to the cap and a series condenser from the tube grid to the hot lead from the signal generator. NOTE WITH MODEL E256 LEAVE GRID CAP ON THE MIXER TUBE, TURN BAND SWITCH TO BROADCAST BAND POSITION AND VARIABLE CONDENSER ALL THE WAY OUT TO MINIMUM CAPACITY.

The sensitivity of the I. F. System alone for Models E256 and E259 will be about 25 to 50 Microvolts for a 50 Milliwatt output, and about 125 Microvolts for Model E5B.

The two trimmers in each of the I. F. cans should be very carefully peaked to resonance as they are very critical and will greatly affect the performance of the set.

Always use as low an output as possible from the signal generator when making the various adjustments.

II. THE BROADCAST BAND

First check the position of the dial hand by rotating the condenser plates to full capacity. At this point the dial hand should be straight across in line with the lines dividing the scale in half. If the hand is off position, remove dial glass to get at the screw holding the hand.

Turn wave band switch all the way to left and dial hand set to 1400 KC (the top scale). The signal generator may be coupled direct to the antenna lead on this band, through a standard 200 MMFD condenser.

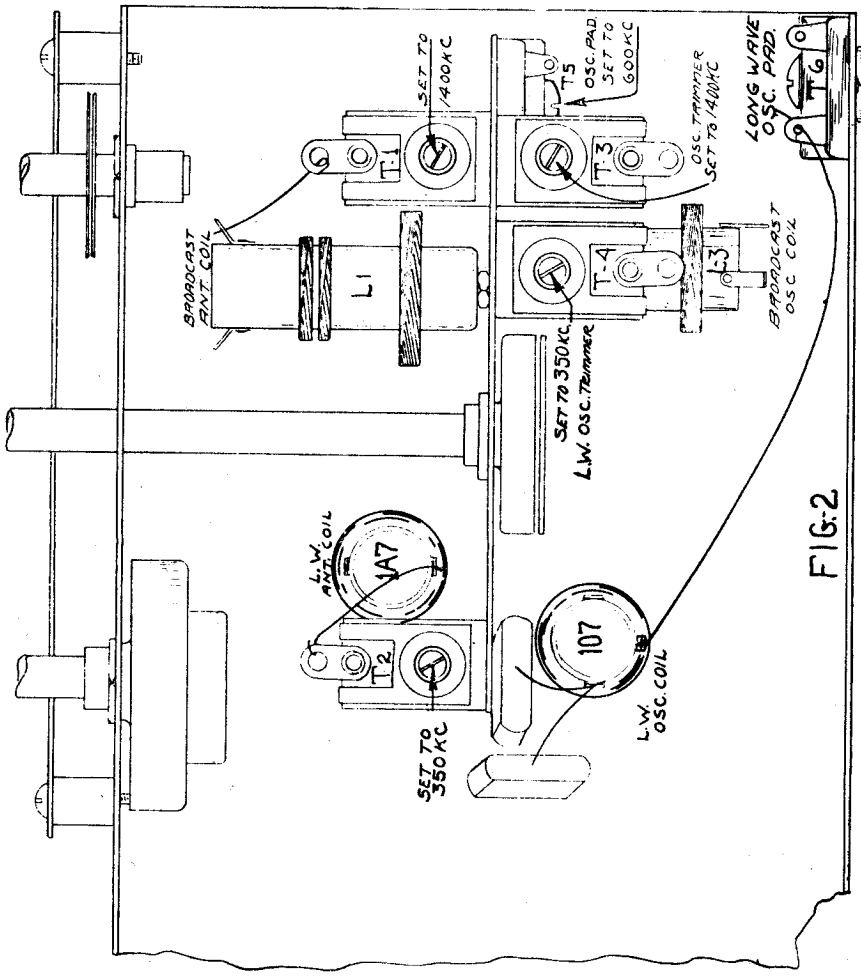

FIG. 2

Peak oscillator trimmer T3 to 1400 KC from the signal generator.

Peak antenna trimmer T1 to 1400 KC after adjusting oscillator.

Set dial hand to 600 KC and adjust oscillator padding condenser T5 to 600 KC.

III. THE LONG WAVE BAND

With the Band switch in position for the Long Wave Band, (all the way to the left) peak oscillator trimmer T4 to 350 KC.

After oscillator trimmer is set, peak Antenna Circuit trimmer T2 to 350 KC.

Turn dial hand to 150 KC and adjust oscillator padding condenser T6 to 150 KC.

©John F. Rider, Publisher

MODEL 6B
Schematic
Alignment
Parts

HOWARD RADIO CO.

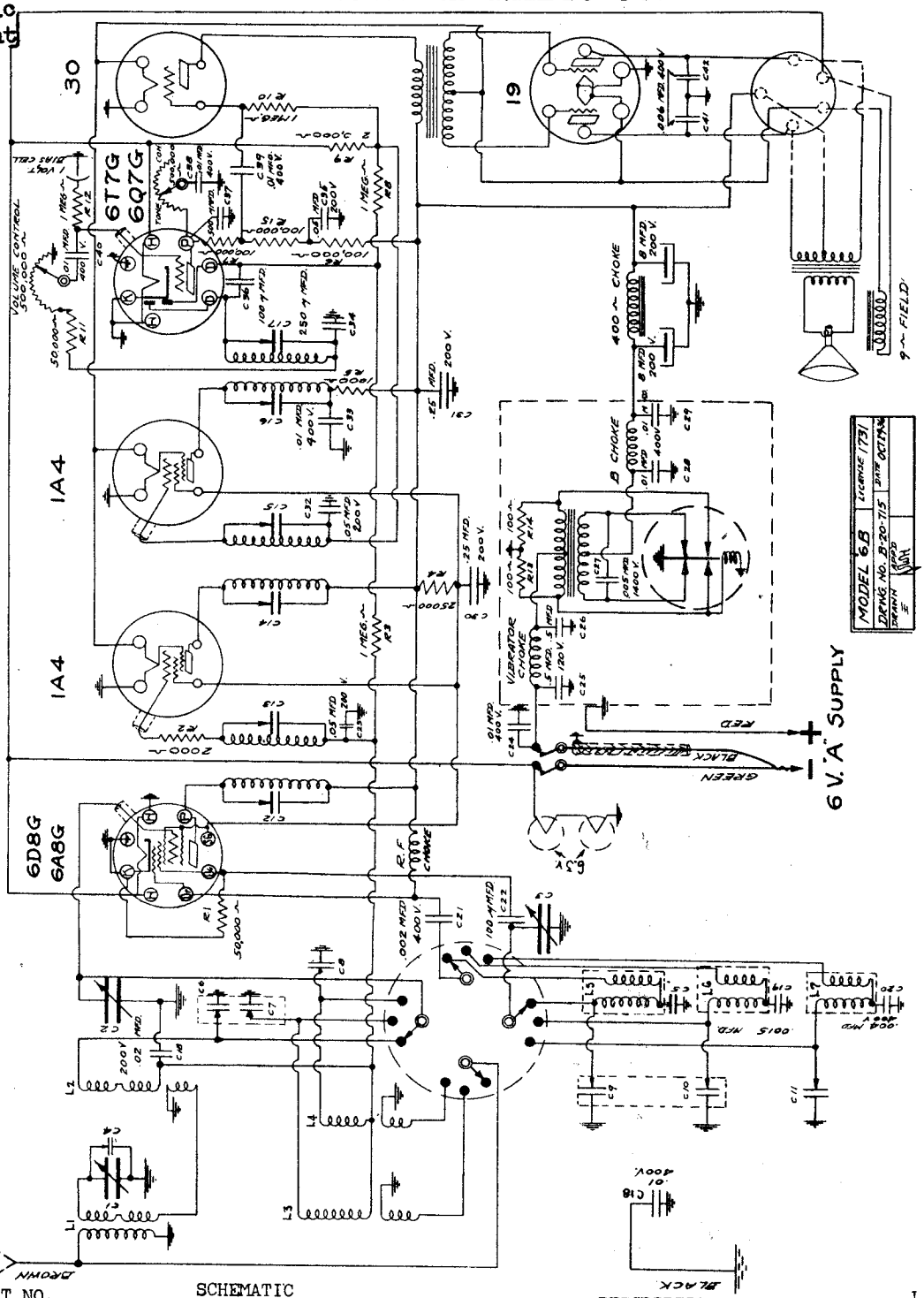

5820	Switch - Wave Band, 3 position.	1.10
4206	Transformer - Power (Vibrator).	2.00
4323	Transformer - Audio Input - P.P	1.50
6601	Tube Shield	.16
9605	Vibrator.	3.20

IF PEAK 465 KC.

PRICES ARE SUBJECT TO CHANGE WITHOUT NOTICE

ALIGNMENT SAME AS MODEL-268 SEE INDEX

PART NO.	SCHEMATIC LOCATION	DESCRIPTION	LIST PRICE
7601		Bias Cell - 1 Volt.	$0.30
4303		Choke - B Plus.	1.25
8544	L2	Coil - B.C. Grid.	.80
4158-3	L5	Coil - B.C. Oscillator, Complete.	.80
8543	L1	Coil - B.C. Antenna	.80
8547-2	L6	Coil - Police Oscillator, Complete.	.80
8546-2	L3	Coil - Police Antenna, Complete	.80
8549-2	L7	Coil - Foreign Band, Oscillator	.80
8548	L4	Coil - Foreign Band, Antenna.	.80
8539		Coil - Oscillator, Plate Choke.	.70
8540		Coil - Hash Filter Choke.	.70
8560		Coil - "A" Choke.	.70
8572		Coil - 1st. and 2nd. I.F. Assembly, Complete.	1.30
8542-3		Coil - 3rd. I.F. Assembly, Complete.	1.30

©John F. Rider, Publisher

HOWARD RADIO CO.

MODEL 6B-A
Schematic
Alignment
Parts

IF PEAK 465 KC.

PRICES ARE SUBJECT TO CHANGE WITHOUT NOTICE

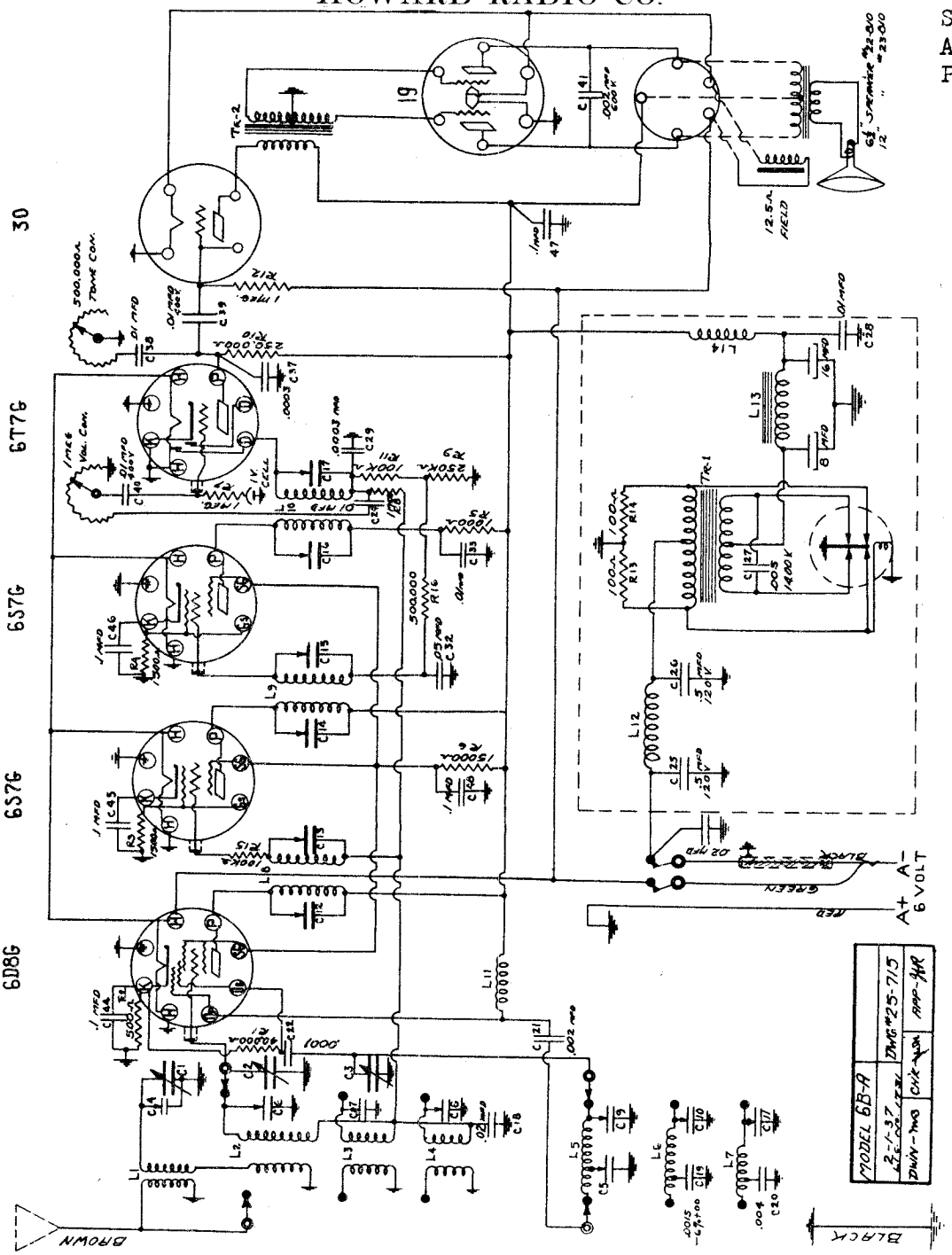

PART NO.	SCHEMATIC LOCATION	DESCRIPTION	LIST PRICE
7601		Bias Cell -.1 Volt	.30
5536-1		Cable - 3 Wire - Battery	.75
11-212	L13	Choke - "B" Plus	1.25
13-212	L12	Choke - "A"	.70
12-212	L14	Choke - "B" Plus - Hash Filter	.70
8544	L2	Coil - B. C. Grid, Complete	.80
8543	L1	Coil - B. C. Antenna	.80
4158-3	L5	Coil - B. C. Oscillator, Complete	.80
8547-2	L6	Coil - Police Oscillator, Complete	.80
8546-2	L3	Coil - Police Antenna, Complete	.80
8549-2	L7	Coil - Foreign Band, Oscillator	.80
8548-2	L4	Coil - Foreign Band, Antenna	.80
8539	L11	Coil - Oscillator Plate Choke	.70
20-936	L8	Coil - 1st. I. F. Assembly	1.30
22-936	L9	Coil - 2nd. I. F. Assembly	1.30
23-936	L10	Coil - 3rd. I. F. Assembly	1.30

Switch - Wave Band	5820	1.10
Transformer - Power (Vibrator	4206-1	2.00
Transformer - Audio Input - P.P.	4323	1.50
Tube Shield	6601	.16
Vibrator	9605-1	3.20

ALIGNMENT SAME AS FOR MODEL-268 SEE INDEX

©John F. Rider, Publisher

MODEL 7BT
Schematic, Voltage

HOWARD RADIO CO.

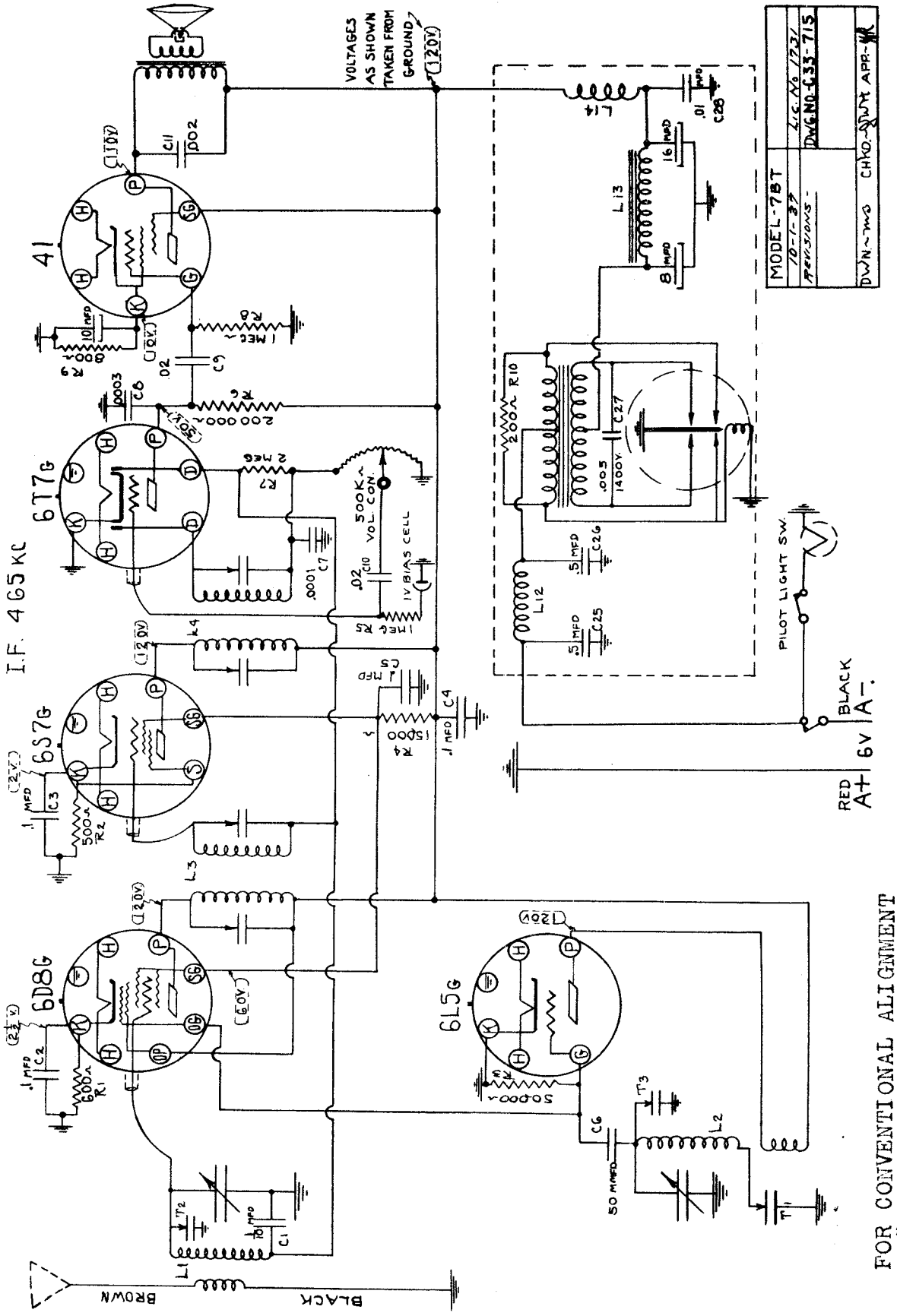

©John F. Rider, Publisher

HOWARD RADIO CO.

MODEL 240-1
MODEL 240-2
Schematics, Voltage

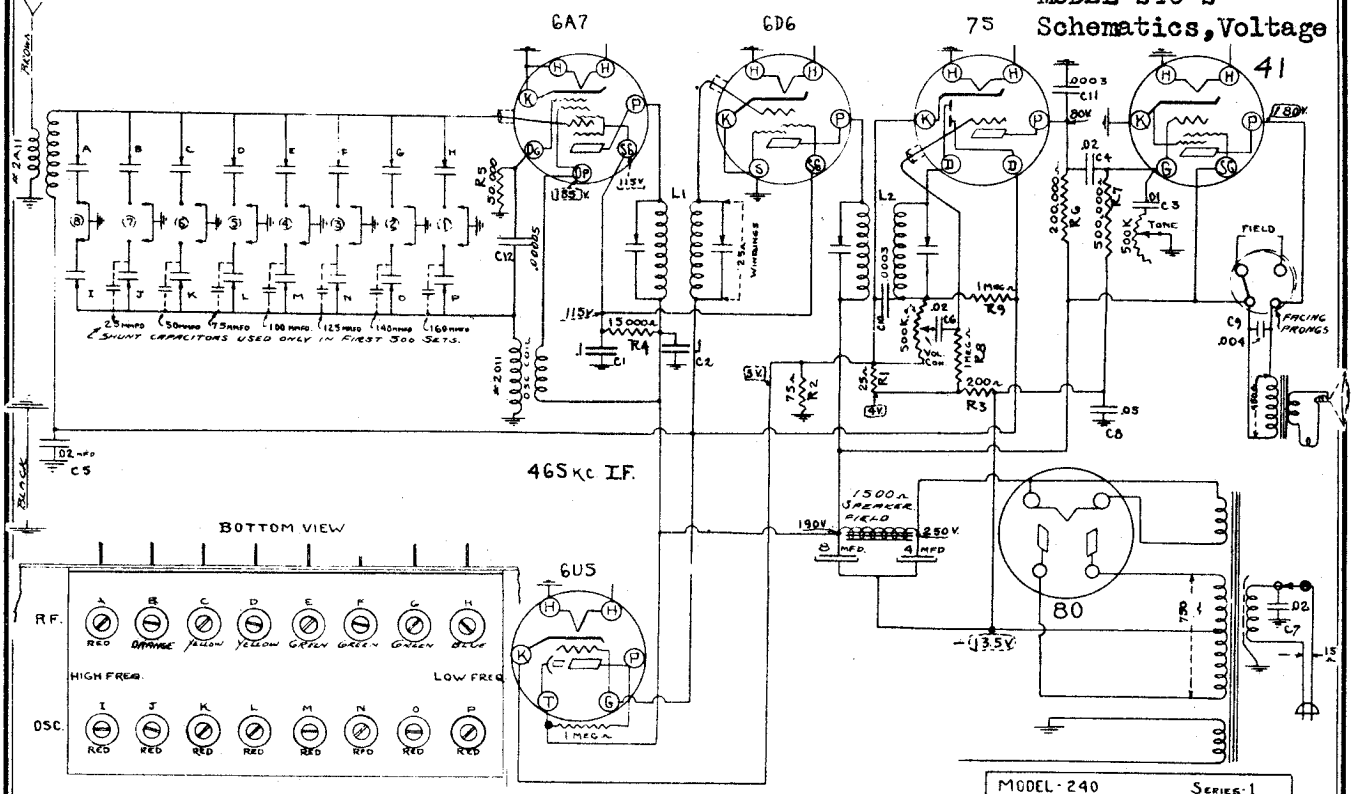

FOR NOTES AND ALIGNMENT SEE INDEX

VOLTAGES SHOWN ☐ TAKEN FROM GROUND. LINE VOLTAGE - 117 AC

MODEL - 240	SERIES - 1
HOWARD RADIO CO. CHICAGO ILL.	
11-1-37	DWG No. C40-715
DWN. JMS	CHKD.	APP. MR.

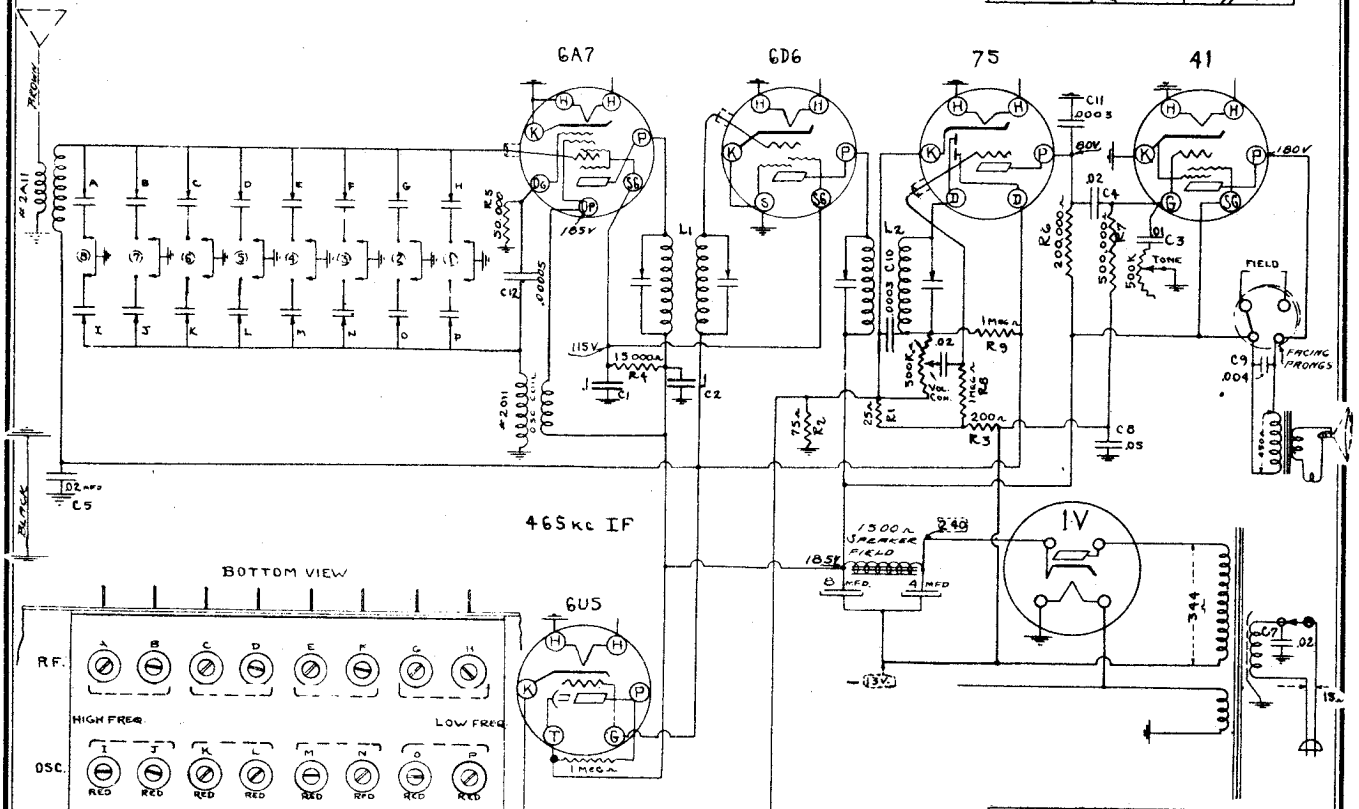

VOLTAGES SHOWN ☐ TAKEN FROM GROUND. LINE V - 117 AC.

MODEL - 240-2	SERIES - 2
HOWARD RADIO CO. CHICAGO ILL.	
12-1-37	DWG No. C41-715
DWN. JMS	CHKD.	APP. MR

©John F. Rider, Publisher

MODELS 240-1,240-2
Phono.Data,Parts
Tuner Data

HOWARD RADIO CO.

SET-UP INSTRUCTIONS

8	7	6	5	4	3	2	1
1150–1750 KC POLICE	1000–1500 KC	800–1200 KC	800–1200 KC	600–900 KC	600–900 KC	600–900 KC	550–800 KC

CONNECT AERIAL, POWER SUPPLY AND TURN ON VOLUME BEFORE STARTING STATION SET-UP

SET-UP INSTRUCTIONS

FIRST – Select button by number that will tune desired station according to frequency vs. buttons as shown above.

SECOND – Depress the button selected, then adjust red adjustment (be sure to adjust the adjustment having the same number as the depressed button.) Move this adjustment until desired station is heard.

THIRD – Next move the adjustment directly above until electric eye shows maximum deflection, then slightly re-adjust red adjustment for maximum eye deflection.

FOURTH – Insert the station call letter tab over button number just selected. Repeat this procedure for the remaining buttons.

EXAMPLE

Station desired, WGN: WGN frequency is 720 KC, therefore Button 2, 3, or 4 can be used. Button 3 is depressed on front of panel, the red adjustment above No. 3 is moved until WGN comes in. The adjustment directly above the red one is adjusted for maximum eye deflection, the red adjustment is again moved slightly to check eye for maximum deflection. WGN tab is removed from tab sheet and inserted in escutcheon over No. 3. Insert tab by pushing in place with finger-tip.

SUGGESTIONS

FIRST – Do not try to extend the adjustments beyond their frequency rating.

SECOND – Move adjustments slowly.

THIRD – Double-check before moving any adjustment to make sure adjustment number corresponds to button number. Carelessness in this manner will cause you to misadjust adjustments already completed.

FOURTH – Check adjustments occasionally for maximum deflection of eye, while receiver is in service. This will not have to be done often but it is good assurance that your receiver is always tuned properly. Sometimes it helps to have another receiver operating on the station desired so that station being tuned in by adjustment can be quickly recognized.

REPLACEMENT PARTS AND PRICE LIST
Models 240-1 and 240-2

PART NO.	LIST PRICE	DESCRIPTION	CIRCUIT LOCATION
32-936	$1.30	Coil - 1st I.F. Assembly, Complete. . . .	L1
33-936	1.30	Coil - 2nd I.F. Assembly, Complete. . . .	L2
2A11	.40	Coil - Antenna.	
2011	.40	Coil - Oscillator	
28-266	1.25	Condenser - 8-4 Mfd. 400 Volt, Electrolytic.	
32-262	.25	Condenser - Trimmer - 2 Plate Model 240-1	A,I,J,K, L,M,N,O,P
33-262	.25	Condenser - Trimmer - 3 Plate Model 240-1	B
34-262	.25	Condenser - Trimmer - 4 Plate Model 240-1	C,D
35-262	.25	Condenser - Trimmer - 5 Plate Model 240-1	E,F,G
36-262	.30	Condenser - Trimmer - 6 Plate Model 240-1	H
39-262	.40	Condenser - Trimmer - Dual Model 240-2	GH
40-262	.40	Condenser - Trimmer - Dual Model 240-2	EF
41-262	.40	Condenser - Trimmer - Dual Model 240-2	CD
42-262	.35	Condenser - Trimmer - Dual Model 240-2	AB
43-262	.40	Condenser - Trimmer - Dual Model 240-2	OP
44-262	.40	Condenser - Trimmer - Dual Model 240-2	MN
45-262	.40	Condenser - Trimmer - Dual Model 240-2	LK
46-262	.35	Condenser - Trimmer - Dual Model 240-2	IJ
	.16	Condenser - .1 Mfd. 400 Volt.	C1,C2
	.16	Condenser - .01 Mfd. 400 Volt	C3
	.16	Condenser - .02 Mfd. 400 Volt	C4
	.16	Condenser - .02 Mfd. 200 Volt	C5,C6
	.20	Condenser - .02 Mfd. Moulded.	C7
	.16	Condenser - .05 Mfd. 200 Volt	C8
	.16	Condenser - .004 Mfd. 400 Volt.	C9
46-262	$0.16	Condenser - .0003 Mfd. Mica	C10,C11
	.16	Condenser - .00005 Mfd. Mica.	C12
29-281	.75	Control - Volume.	
14-278	.95	Control - Tone and Switch	
1-290	.35	Cord - Line and Plug.	
21-352	1.00	Escutcheon Plate.	
22-490	.10	Button for Station Selector	
460	.04	Grid Cap.	
16-490	.10	Knob - Black Bakelite	
	.12	Resistor - 25 Ohm 1/2 Watt.	R1
	.12	Resistor - 75 Ohm 1/2 Watt.	R2
	.12	Resistor - 200 Ohm 1/3 Watt	R3
	.12	Resistor - 15,000 Ohm 1/2 Watt.	R4
	.12	Resistor - 50,000 Ohm 1/2 Watt.	R5
	.12	Resistor - 200,000 Ohm 1/3 Watt	R6
	.12	Resistor - 500,000 Ohm 1/3 Watt	R7
	.12	Resistor - 1 Megohm 1/3 Watt.	R8,R9
2744	.15	Socket - 4 Prong.	
2746	.15	Socket - 6 Prong.	
2747	.15	Socket - 7 Prong.	
6-772	.15	Socket - 4 Prong, Speaker	
9-917	2.50	Switch - Push-button, selector.	
6601	.15	Tube Shield Shell	
9-771	.65	Tuning Eye Socket and Cable	
27-938	2.75	Transformer - Model 240-1 for 80 Tube . .	
39-938	2.75	Transformer - Model 240-2 for 1V Tube . .	
42-810	4.00	Speaker - 5½" with plug	

NOTE: When ordering speaker parts such as cone, transformer or the field it is necessary that the number on the back of the speaker be specified. Also make of speaker.

THE ADAPTION OF THE SET FOR USE WITH PHONOGRAPH

Out of the back of the chassis there extends three lugs as shown in Diagram Fig. 1.

For phonograph use, the jumper is removed and a single pole, double throw switch is connected as shown in Fig. 2. The pick-up leads from the pick-up are connected to Nos. 1 and 2 terminals, with the overall shield grounded to No. 3 terminal.

PRICES ARE SUBJECT TO CHANGE WITHOUT NOTICE

FIG. 1

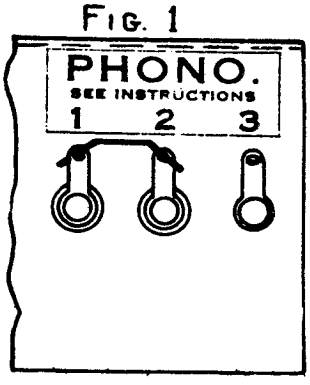

FIG. 2

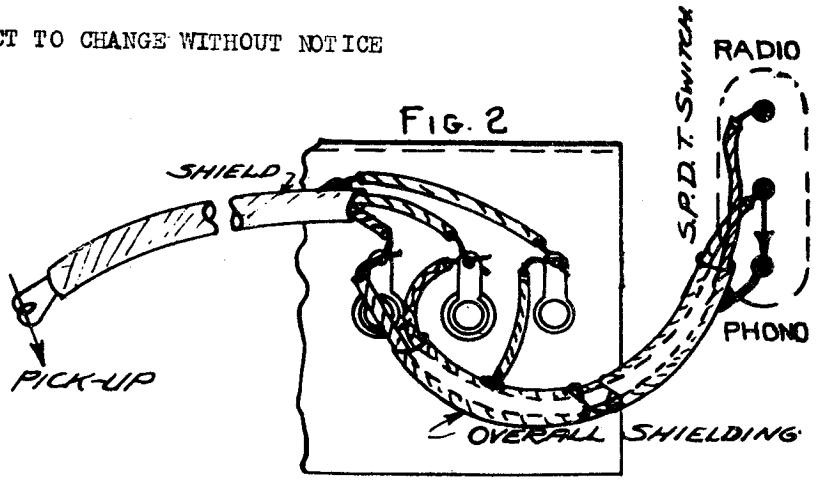

©John F. Rider, Publisher

HOWARD RADIO CO.

MODELS 225, S225, 250, S250
Schematic, Voltage

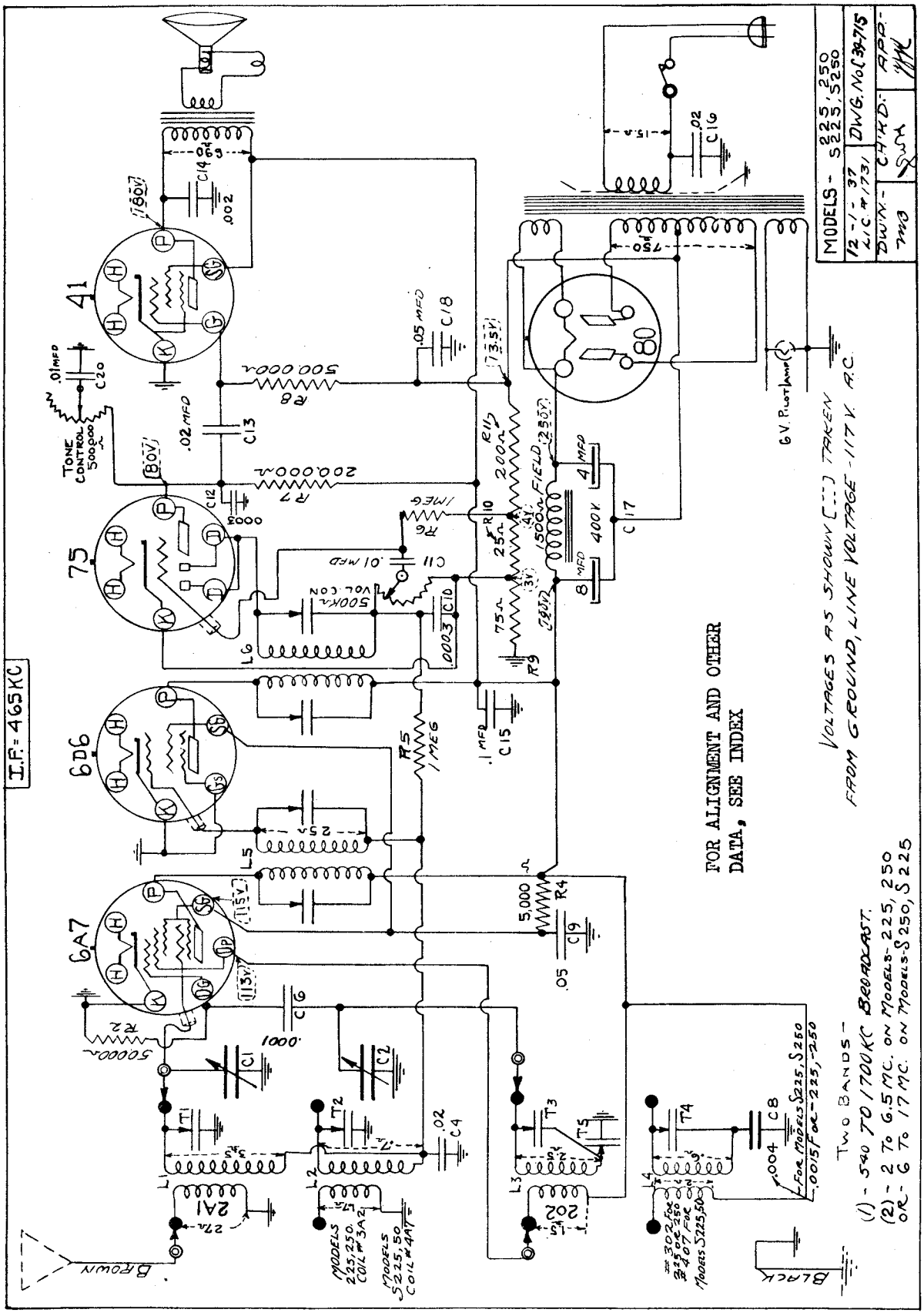

©John F. Rider, Publisher

MODELS 260, S260
Schematic, Voltage
Phono. Data, Parts

HOWARD RADIO CO.

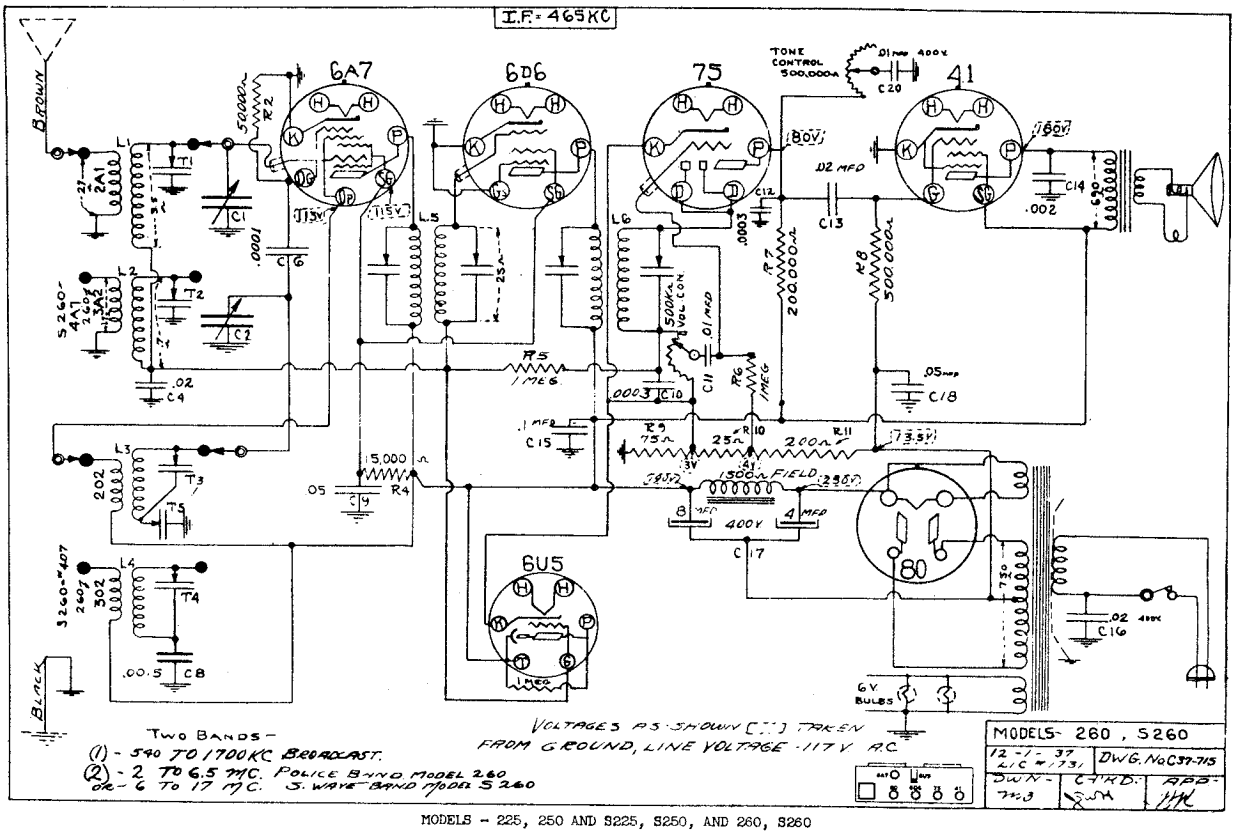

MODELS - 225, 250 AND S225, S250, AND 260, S260

REPLACEMENT PARTS LIST

PART NO.	LIST PRICE	DESCRIPTION	CIRCUIT LOCATION
22-936	1.30	Coil - 1st. I. F. Assembly	L5
23-936	1.30	Coil - 2nd. I. F. Assembly	L6
2A1	.80	Coil - B. C. Antenna	L1
202	.80	Coil - B. C. Oscillator	L3
3AE	.40	Coil - S. W. Antenna	L2
For 225, 250, 260		#4A7 for S225, S250, S260	
302	.40	Coil - S. W. Oscillator	L4
For 225, 250, 260		#407 for S225, S250, S260	

PART NO.	LIST PRICE	DESCRIPTION	CIRCUIT LOCATION
20-720	.04	Drive Shaft	
4041	.05	Friction Disc - 1"	
655	.01	Grommet - Black Rubber - For Antenna Lead	
7806	.04	Grommet - Rubber - 3/8" Hole	
460	.05	Grid Cap - Large	
8-490	.15	Knob - Small	
18-490	.15	Knob - Large	

THE ADAPTION OF THE SET FOR USE WITH PHONOGRAPH

Out of the back of the chassis there extends three lugs as shown in Diagram Fig. 1.
For phonograph use, the jumper is removed and a single pole, double throw switch is connected as shown in Fig. 2. The pick-up leads from the pick-up are connected to Nos. 1 and 2 terminals, with the overall shield grounded to No. 3 terminal.

FOR ALIGNMENT AND OTHER DATA, SEE INDEX.

FIG. 1

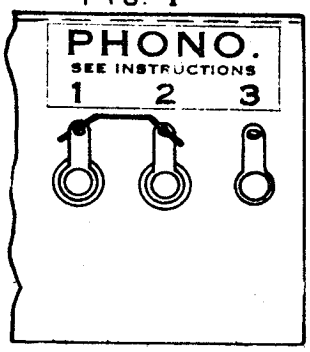

FIG. 2

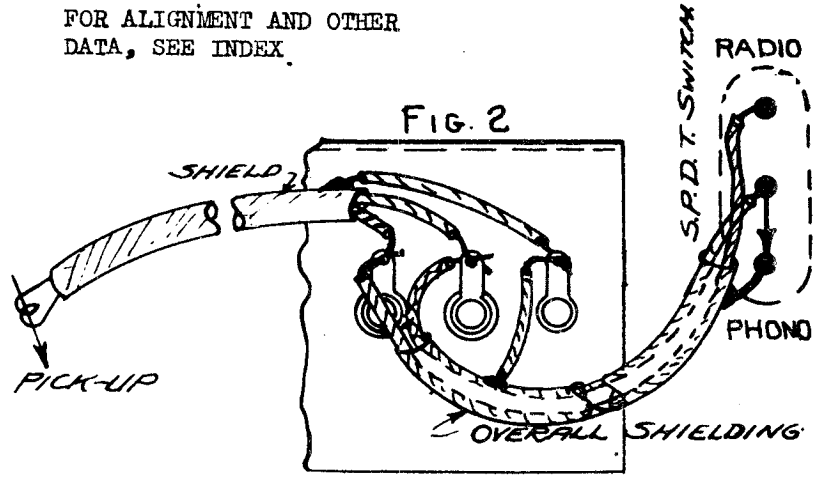

©John F. Rider, Publisher

HOWARD RADIO CO.

MODELS 275C, 275T, 280
Schematic, Voltage

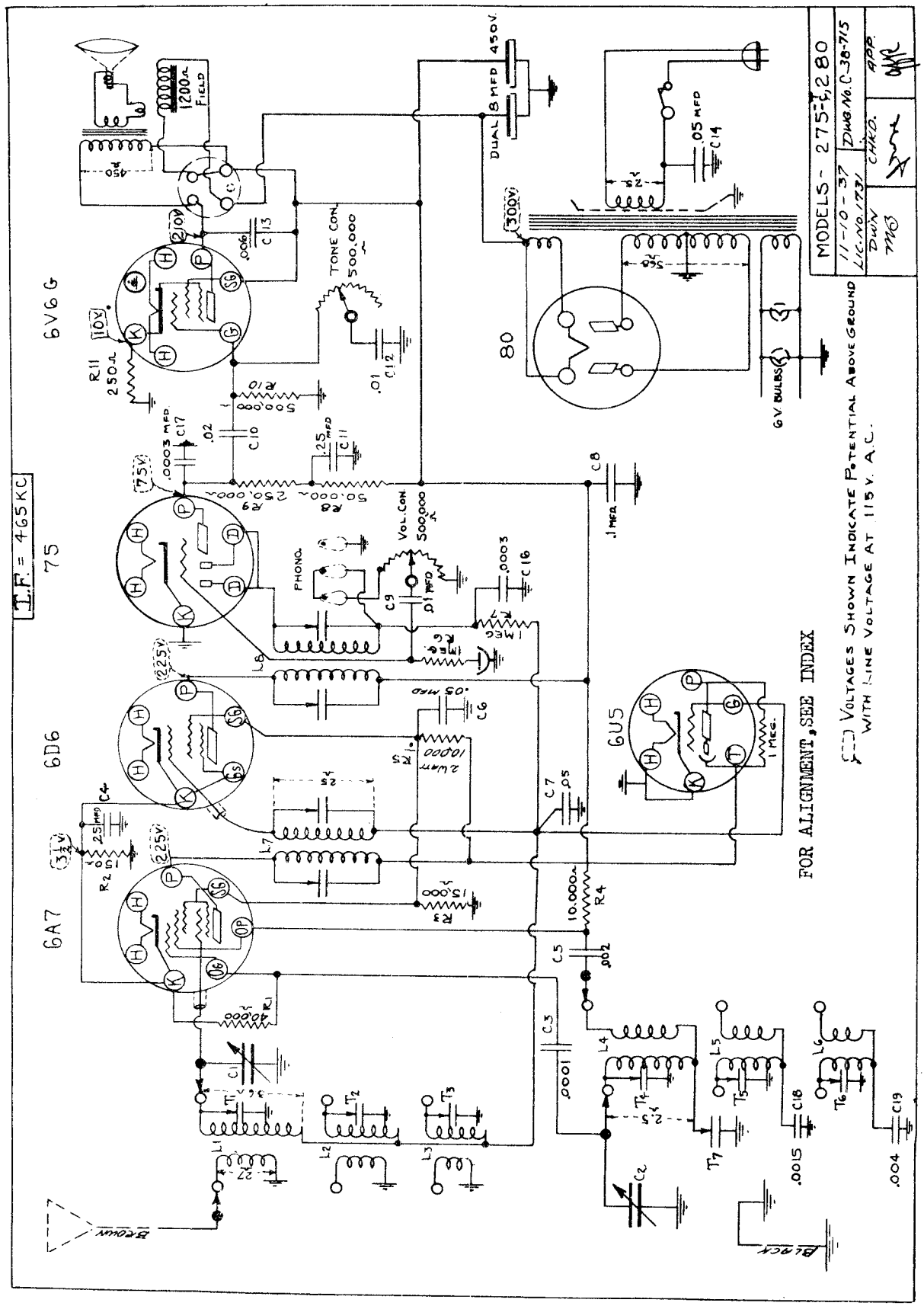

©John F. Rider, Publisher

MODELS 275C, 275T, 280
Socket, Trimmers

HOWARD RADIO CO.

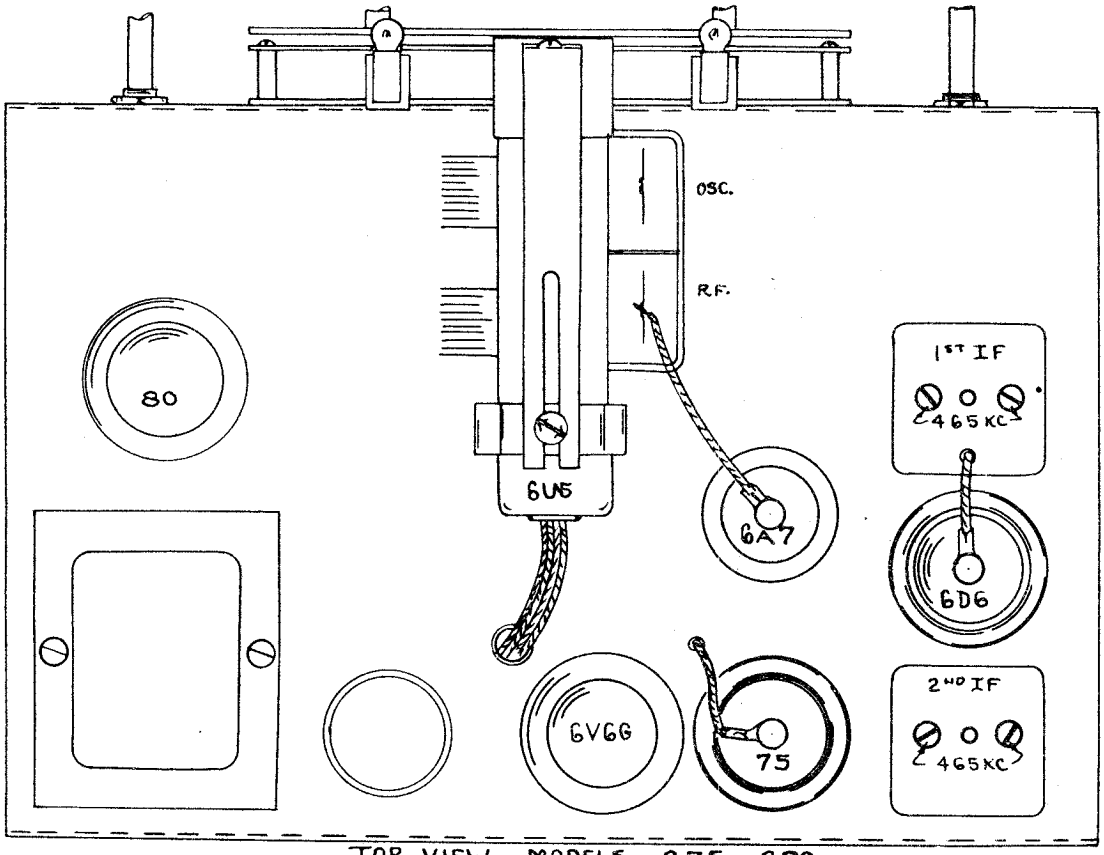

TOP VIEW MODELS - 275, 280
FIG.-3

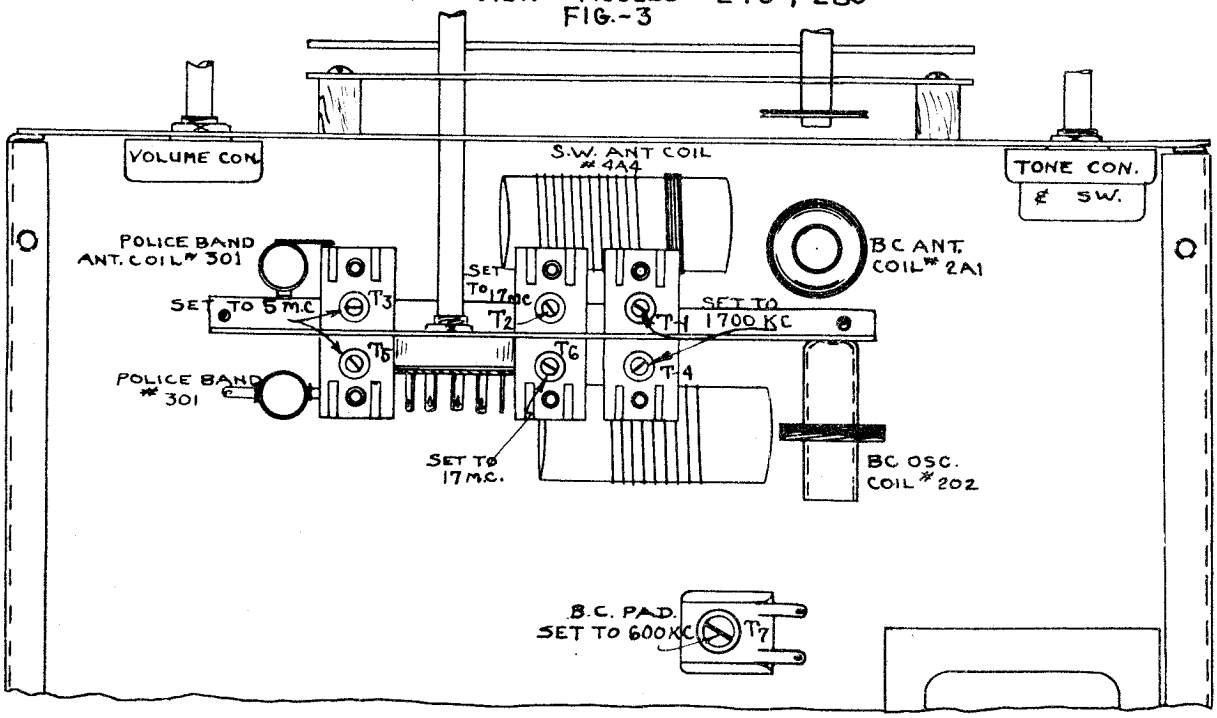

BOTTOM VIEW MODELS 275, 280
FIG.-4

©John F. Rider, Publisher

MODELS 225,250,260
Trimmers,Alignment,Part 1
MODELS 275C,275T,280
Alignment,Part 1

HOWARD RADIO CO.

MODELS 225,S225,250,S250
Socket,I-F Trimmers
Alignment,Part 1

THE I. F. STAGES

The I. F.'s are aligned by the usual system of feeding the intermediate frequency of 465 KC into the grid of the 6A7 tube.

The two trimmers in each of the I. F. cans should be very carefully peaked to resonance as they are very critical and will greatly affect the performance of the set. These are trimmers number T8, T9, T10, T11. (see pictorial diagram). Fig. 1.

The Sensitivity of the I. F. stages will be 25 to 50 microvolts or better for a 50 milliwatt output.

Always use as low an output as possible from the test oscillator in making the various adjustments.

ALIGNMENT OF POLICE BAND 2 TO 6.5 MEGACYCLES

First check the position of the dial hand by rotating the condenser shaft to the left to full capacity. At this point the dial hand should be straight across in line with the lines dividing the scale in half. If the hand is off position it can be lined up by removing dial glass and setting hand with screw in center of dial.

1. Set the test oscillator to 6 megacycles.
2. Turn wave band switch all the way to right for Police Band, and set dial hand to 6 M. C.
3. Peak trimmer condenser T4 of the oscillator coil Fig. 2 to resonance with 6 M. C. fed into antenna.
4. Adjust antenna coil trimmer T2 to same frequency after the above mentioned oscillator trimmer has been set.

THE BROADCAST BAND FIG. 2 OR FIG. 2S

1. Turn wave band switch all the way to left and dial hand set to 1400 KC (the top scale).
2. Peak oscillator trimmer T3 to 1400 KC and antenna trimmer T1 to same frequency.
3. Set dial hand to 600 KC and adjust oscillator padding condenser T5 to 600 KC.
4. Recheck dial at 1400 KC as in number (1) and (2).
5. Points in the middle of the dial may be checked and if necessary the plates of the front section of variable condenser may be bent for alignment.

NOTES.

1. Seal all trimmers after their final adjustment.
2. Be sure that the settings are being made to the true fundamental signal from the oscillator and not on a harmonic or image frequency.

The models 225 and 250 are electrically the same chassis; the only difference being the cabinets in which they are mounted. These models have two band circuits covering the Broadcast Band 550 to 1700 KC and the so-called Police Band from 2 to 6.5 megacycles, having separate Antenna and Oscillator coils for each band.

The models S225 and S250 cover the Broadcast Band 550 to 1700 KC and the short wave band 5.5 to 18 MC.

The models 260 and S260 have the same circuit or the 225, S225 respectively with the addition of the tuning eye tube to indicate resonance.

The models 275, 275C and 280 are the same electrically, covering 3 bands, 550 to 1700 KC, 1.7 to 5.5 MC, and 5.5 to 18 MC.

THE OVERALL SENSITIVITY for the models described in this folder will be about 15 to 30 microvolts.

THE MAXIMUM OUTPUT to be obtained from the models 225, 250, 260 series will be about 2.25 watts. The undistorted output about 1-1/2 watts.

The 275 series will give you a maximum output of 5 watts, undistorted about 4 watts.

TOP VIEW 225,250,S225,S250
FIG-1

BOTTOM VIEW - 225, 250, 260.
FIG. 2

©John F. Rider, Publisher

MODELS S225,S250,S260
Trimmers,Alignment Part 2.

HOWARD RADIO CO.

MODELS 275C,275T,280
Alignment Part 2

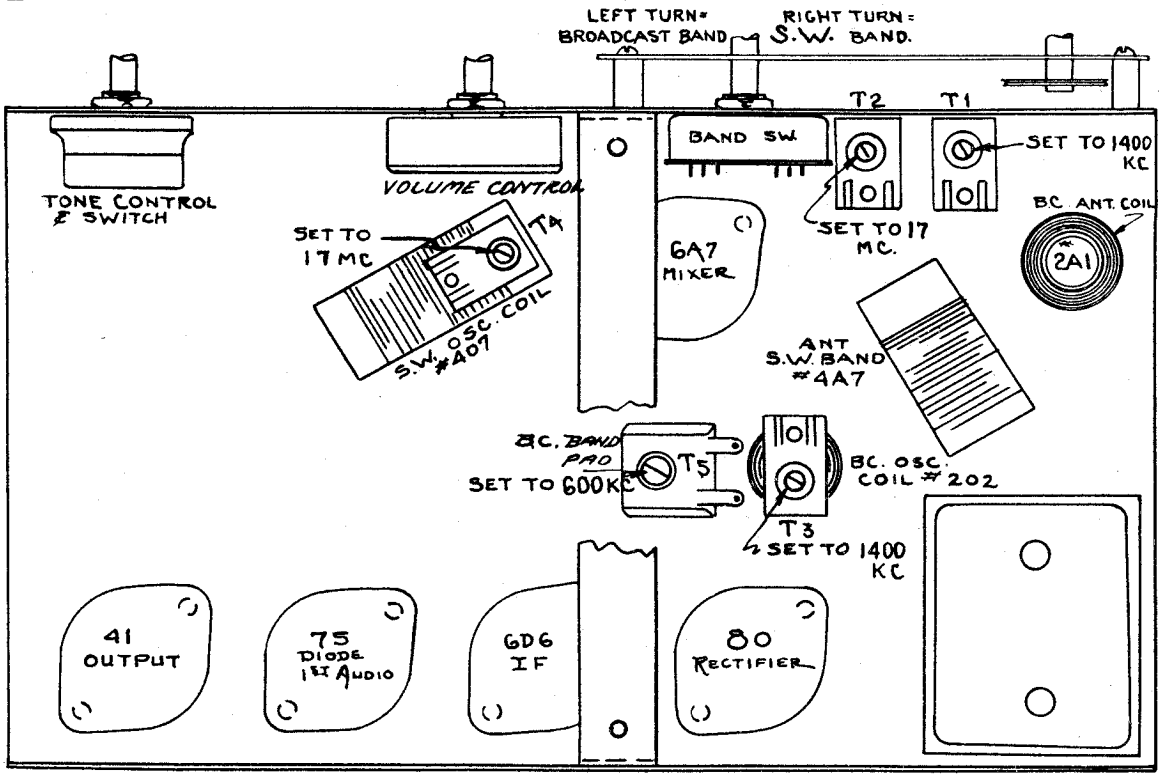

BOTTOM VIEW - S225, S250, S260
FIG.-2S

ALIGNMENT OF SHORTWAVE BAND 5.5 TO 18 M. C. ON ALL "S" MODELS - FIG. 2-S, ALSO FOR MODELS 275, 280

First check the position of the dial hand by rotating the condenser shaft to the left to full capacity. At this point the dial hand should be straight across in line with the lines dividing the scale in half. If the hand is off position it can be lined up by removing dial glass and setting hand with screw in center of dial.

1. Set the test oscillator to 17 megacycles.
2. Turn wave band switch all the way to right for highest S.W. band, and set dial hand to 17 M. C.
3. Peak trimmer condenser of the oscillator coil to resonance with 17 M. C. fed into antenna.
4. Adjust antenna trimmer to same frequency after the above mentioned oscillator trimmer has been set.

NOTE: After adjusting the two high bands at 17 megacycles and 5 megacycles the test oscillator input to antenna should be increased and receiver dial advanced to .9 megacycle lower and note if test oscillator signal is heard.

In case there is no response the oscillator trimmers have been pulled down too tightly. The trimmers should be released until this condition exists then go back to original point of alignment - reduce antenna input voltage and correct the trimmer adjustment.

EXAMPLE: The receiver has been adjusted to 17 megacycles. Tune receiver to approximately 16.9 M. C.

Increase oscillator signal by "opening up" the attenuator. Move the dial back and forth at 16.9 M. C.

If no signal is heard, let oscillator trimmer off until it is heard at 16.9 M. C.

Reduce signal voltage from generator, go back to 17 M. C. and slightly correct this last trimmer adjustment.

The same applies to the 5 M. C. adjustment.

©John F. Rider, Publisher

HOWARD RADIO CO.

MODELS 318,325
MODEL 368
Schematics

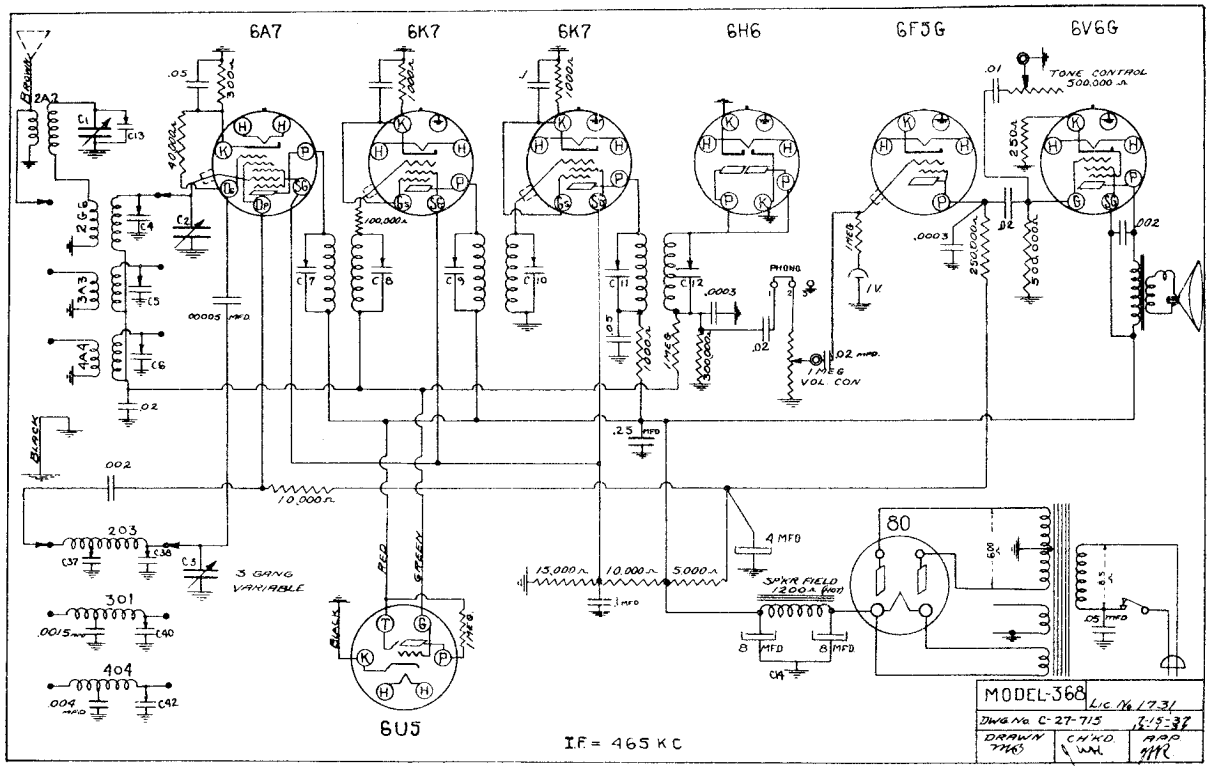

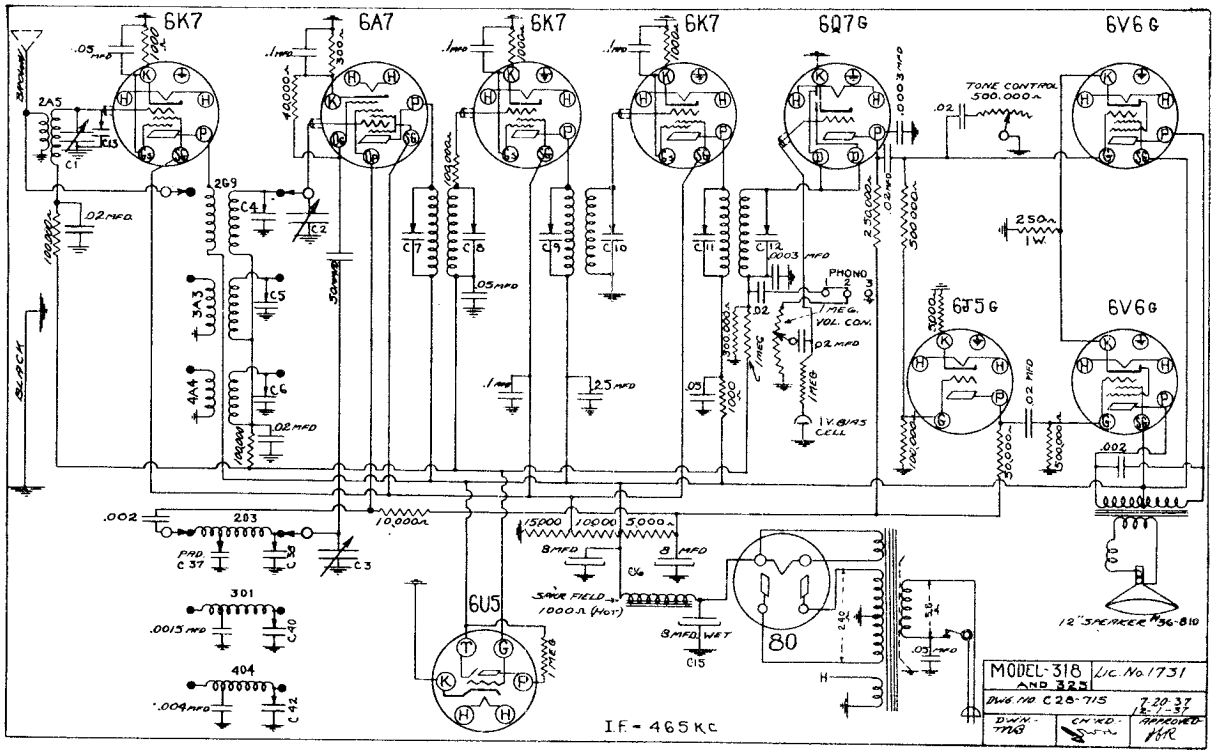

©John F. Rider, Publisher

MODELS 318,325
MODEL 368
Parts List

HOWARD RADIO CO.

REPLACEMENT PARTS AND PRICE LIST

PART NO.	SCHEMATIC LOCATION	DESCRIPTION	LIST PRICE
7601		Bias Cell - 1 Volt.	.30
2A5		Coil - B. C. Preselector - Model 318.	.80
2A2		Coil - B. C. Preselector - Model 368.	.80
2C3		Coil - B. C. Oscillator	.80
2C9		Coil - B. C. Grid - Model 318	.80
2C6		Coil - B. C. Grid - Model 368	.80
4A4		Coil - S. W. Antenna.	.40
404		Coil - S. W. Oscillator	.40
3A3		Coil - P. B. Antenna.	.40
301		Coil - P. B. Oscillator	.40
20-936A		Coil - 1st. I. F. Assembly.	1.30
22-936A		Coil - 2nd. I. F. Assembly.	1.30
23-936A		Coil - 3rd. I. F. Assembly.	1.30
25-262	C-37	Condenser - Padding - 5 Plate	.25
8218-3	C4,C5,C6,C38,C40,C42	Condenser - Trimmer - 1 Section	.15
8116	C1,C2,C3	Condenser - Variable, 3 Gang.	3.75
8826-5	C16	Condenser - Dual 8 Mfd. 450Volt - Model 318	1.80
8824	C15	Condenser - 8 Mfd. 475 V. (Wet) - Model 318	1.15
19-266	C14	Condenser - 8-8-4 Mfd. - Model 368	1.75
		Condenser - .1 Mfd. 200 Volt.	.16
		Condenser - .1 Mfd. 400 Volt.	.16
		Condenser - .01 Mfd. 400 Volt	.16
		Condenser - .02 Mfd. 200 Volt	.16
		Condenser - .02 Mfd. 400 Volt	.16
		Condenser - .05 Mfd. 200 Volt	.16
		Condenser - .05 Mfd. 400 Volt	.16
		Condenser - .05 Mfd. 400 Volt - Moulded	.20
		Condenser - .25 Mfd. 400 Volt	.20
		Condenser - .002 Mfd. 200 Volt.	.16
		Condenser - .002 Mfd. 600 Volt.	.16
		Condenser - .004 Mfd. 400 Volt.	.16
		Condenser - .004 Mfd. 600 Volt.	.16
		Condenser - .006 Mfd. 600 Volt.	.16
		Condenser - .0015 Mfd. Mica	.25
		Condenser - .0003 Mfd. Mica	.16
		Condenser - .00005 Mfd. Mica.	.16
24-381		Control - Volume - 1 Megohm	.75
11-278		Control - Tone and switch	.95
1-290		Cord - A. C. Line and Plug.	.35
33-310		Dial Glass - Calibrated	1.00
7-235		Dial Glass Mounting Fingers	.01
15-448		Dial Hand	.20
21-270		Drive Shaft 1/4" dia.	.01
11-328		Drive Disc - .020, pyralin.	.15
4043		Drive Disc - 1" Friction - 7/16" hole	.05
4041		Drive Disc - 1" Friction - 5/16" hole	.05
17-352		Escutcheon.	.50
10-427		Escutcheon Glass.	.30
6-235		Escutcheon Mounting Fingers	.01
19-490		Knob - Large.	.15
19-490C		Knob - Coded.	.15
2-498		Lamp - Dial - 6 V. Bayonet Type	.12
		Resistor - 1 Megohm 1/3 Watt.	.12
		Resistor - 250 Ohm 1 Watt	.15
		Resistor - 300 Ohm 1/3 Watt	.12
		Resistor - 1,000 Ohm 1/3 Watt	.12
		Resistor - 5,000 Ohm 1/3 Watt	.12
		Resistor - 10M Ohm 1/2 Watt	.12
		Resistor - 30M Ohm 1/3 Watt	.12
		Resistor - 40M Ohm 1/3 Watt	.12
		Resistor - 50M Ohm 1/3 Watt	.12
		Resistor - 50M Ohm 1/2 Watt	.12
		Resistor - 100M Ohm 1/3 Watt.	.12
		Resistor - 250M Ohm 1/3 Watt.	.12
		Resistor - 300M Ohm 1/3 Watt.	.12
		Resistor - 500M Ohm 1/3 Watt.	.12
4-335		Resistor - Candohm - 3 Section.	.50
11-768		Socket - Pilot Light, & wire assembly	.15
2744		Socket - 4 Prong.	.15
2747		Socket - 7 Prong.	.15
6008		Socket - 8 Prong.	.15
6-772		Socket - 4 Prong (Special).	.15
18-914		Switch - Wave Band - 4 Pole, 3 Position	.80
30-938		Switch - S.P.D.T. with Bracket for Phono.	.60
29-938		Transformer - Power - Model 318	4.25
6-164		Transformer - Power - Model 368	3.75
6-771		Tuning Eye Bracket Assembly	.20
17-400		Tuning Eye Socket & Cable	.65
1-167		Tuning Eye Sleeve	.04
3-167		Rubber Bumper - Dial Glass Mounting	.02
966		Rubber Bumper - Dial Face	.02
6515-2		Rubber Grommet - Cabinet Mounting	.04
36-810		Wing Screw - Cabinet Mounting	.04
35-810		Speaker - 12" with Plug - Model 318	8.50
		Speaker - 6½" with Plug - Model 368	4.50

NOTE: When ordering speaker parts such as cone, transformer or the field it is necessary that the number on the back of the speaker be specified. Also make of speaker.

PRICES ARE SUBJECT TO CHANGE WITHOUT NOTICE

MODELS 318, 325 AND 368

©John F. Rider, Publisher

©John F. Rider, Publisher

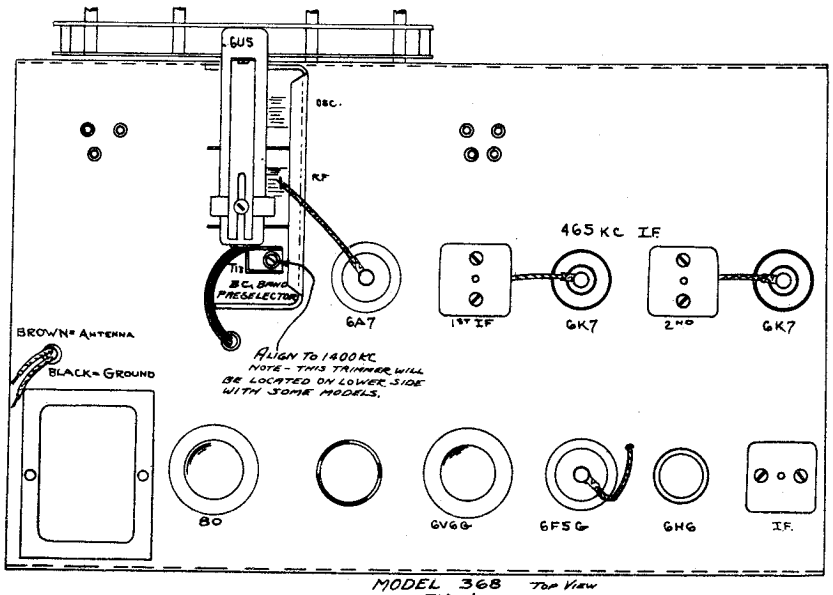

MODEL 368 Top View
FIG-1

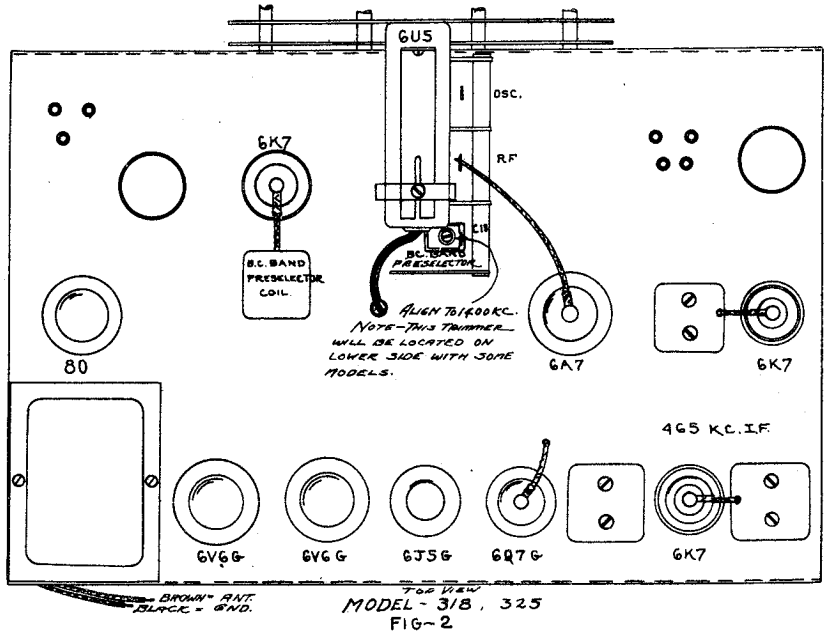

Top View
MODEL - 318, 325
FIG-2

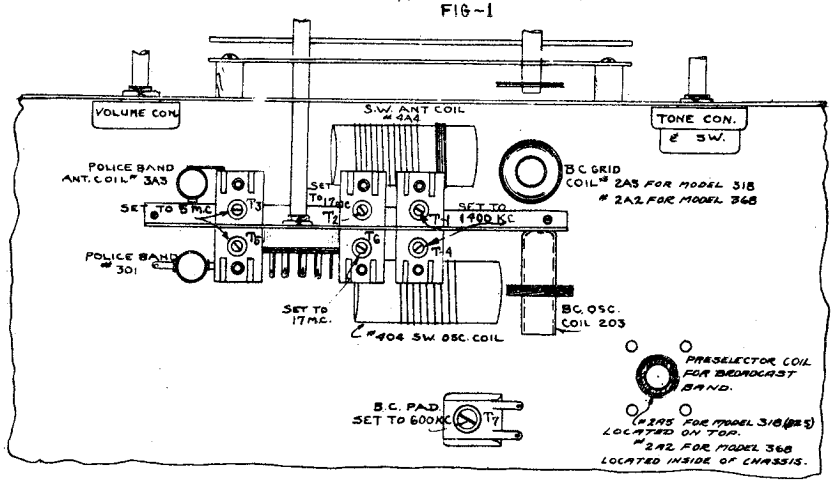

BOTTOM VIEW—MODELS- 368, 318, 325.
FIG-3

VOLTAGE READINGS TAKEN FROM GROUND WITH
LINE VOLTAGE AT 117 VOLTS AC
NO SIGNAL IN ANTENNA

MODEL 368

TUBE	PLATE	CATHODE	S.G.	
6A7	205	3	95	Osc. Plate = 180
6K7	205	4	95	
6K7	200	4.5	95	
6H6	-	-	-	
6F5G	85	-	-	
6V6G	190	12	210	
80	-	-	-	High V = 300 V

MODEL 318, 325

TUBE	PLATE	CATHODE	S.G.	
6K7	240	5.5	125	1st Stage
6A7	240	3	125	Osc. Plate = 145
6K7	240	6	125	I.F. Stage
6K7	240	6	-	
6Q7G	60	-	-	
6J5G	105	5½	-	
6V6G	230	16	240	
6V6G	230	16	240	
80	-	-	-	H. V. = 330

It is advisable to check the position of the tuning eye tube to make certain that it is not pushed against the inside of the dial card. With the adjustment screw on the bracket, allow a small amount of clearance between the end of the tube and the dial to avoid any possibility of the heat from the tube affecting the dial card.

MODELS 240-1,240-2
MODELS 318,325
MODEL 368
Alignment,Notes

HOWARD RADIO CO.

THE MAXIMUM OUTPUT for the models

MODEL	MAXIMUM	UNDISTORTED
368	5 Watts	4 Watts
318,325	11 Watts	9 Watts
240	2.25 Watts	1.5 Watts

The normal voltage readings at the sockets are given in a separate chart

GENERAL DESCRIPTION

THE MODEL 368 is an 8 tube set having three bands, coverage being 550 to 1700 KC, 1.7 to 5.5 MC and 5.5 to 18 MC. There are separate oscillators and R.F. coils for each band. For the broadcast band only a preselector coil is used, being tuned by the back section of the gang condenser.

The three I. F. stages are tuned to 465 KC followed with the conventional diode, amplifier, and single output circuits.

THE MODELS 318, 325 are the same chassis (the model numbers refer to different cabinet styles). This ten tube set has a similar R. F. and I. F. coil system except that the preselector stage on the broadcast band includes the 6 K7 tube. The output is push pull "beam power", the 6J5G being the inverter tube.

THE MODEL 240 series 1 and 2 is strictly a push-button tuner having no gang condenser. The eight push-button station selectors complete the ground circuit of the oscillator and R. F. tuned condensers previously set to whatever frequency desired. The eight circuits cover the complete range of the broadcast band from 540 to 1750 KC. The instructions for the set-up are shown on separate page of this manual.

The model 240-1 used the 80 tube for a rectifier and the model 240-2 uses the 1V type tube.

FOR REPLACEMENT PARTS refer to the part list. When ordering specify serial number of set as well as the part number.

FOR CIRCUIT VOLTAGES refer to the charts shown in the following pages for models 368 and 318. The voltages for the model 240 are shown on the schematic diagrams.

THE ALIGNMENT PROCEDURE

The alignment procedure for the 368-318 models is given in the following pages. We suggest, however, that no attempt be made in changing the trimmer adjustments unless it is found that a change is necessary.

We suggest in case of any trouble the tubes, especially the 6J5G and the 6F5 types, be checked.

The only other trouble that might occur is in cases of extreme low A. C. line voltage of 100 volts or less, by which the oscillator plate voltage might drop to too low a potential.

THE OVERALL SENSITIVITY for the model 368 will be about 8 to 12 microvolts, model 318, 325 about 2 to 4 microvolts and the model 240, 15 to 30 microvolts.

I. THE I.F. STAGES

The intermediate frequency stages are aligned in the usual manner by feeding 465 K.C. into the grid of the mixer tube 6A7.

The two trimmers in each of the I.F. cans should be very carefully peaked to resonance as they are very critical and will greatly affect the performance of the set.

Always use as low an output as possible from the signal generator when making the various adjustments.

The sensitivity of the I.F. system alone will be found to be between 15 and 20 Microvolts.

ALIGNMENT OF SHORTWAVE BAND 5.5 TO 18 M. C.

First check the position of the dial hand by rotating the condenser shaft to the left to full capacity. At this point the dial hand should be straight across in line with the lines dividing the scale in half. If the hand is off position it can be lined up by removing dial glass and setting hand with screw in center of dial.

1. Set the test oscillator to 17 megacycles.
2. Turn wave band switch all the way to right for highest S.W. band, and set dial hand to 17 M. C.
3. Peak trimmer condenser of the oscillator coil to resonance with 17 M. C. fed into antenna. T6
4. Adjust antenna trimmer to same frequency after the above mentioned oscillator trimmer has been set. T2

NOTE: After adjusting the two high bands at 17 megacycles and 5 megacycles the test oscillator input to antenna should be increased and receiver dial advanced to .9 megacycle lower and note if test oscillator signal is heard.

In case there is no response the oscillator trimmers have been pulled down too tightly. The trimmers should be released until this condition exists then go back to original point of alignment - reduce antenna input voltage and correct the trimmer adjustment.

EXAMPLE: The receiver has been adjusted to 17 megacycles. Tune receiver to approximately 16.9 M. C.
Increase oscillator signal by "opening up" the attenuator. Move the dial back and forth at 16.9 M. C.
If no signal is heard, let oscillator trimmer off until it is heard at 16.9 M. C.
Reduce signal voltage from generator, go back to 17 M. C. and slightly correct this last trimmer adjustment.
The same applies to the 5 M. C. adjustment.

ALIGNMENT OF POLICE BAND 1.7 TO 5.5 M.C.

1. Set the test oscillator to 6 megacycles.
2. Turn wave band switch to the middle position for Police Band, and set dial hand to 6 M. C.
3. Peak trimmer condenser T5 of the oscillator coil Fig. 4 to resonance with 6 M. C. fed into antenna.
4. Adjust antenna coil trimmer T3 to same frequency after the above mentioned oscillator trimmer has been set.

THE ALIGNMENT OF THE BROADCAST BAND

1. Turn wave band switch all the way to left and dial hand set to 1400 KC (the top scale).
2. Peak oscillator trimmer T4 to 1400 KC and antenna trimmer T1 to same frequency. Likewise C13 trimmer on the gang condenser.
3. Set dial hand to 600 KC and adjust oscillator padding condenser T5 to 600 KC.
4. Recheck dial at 1400 KC as in number (1) and (2).
5. Points in the middle of the dial may be checked and if necessary the places of the front section of variable condenser may be bent for alignment.

NOTES

1. Seal all trimmers after their final adjustment.
2. Be sure that the settings are being made to the true fundamental signal from the oscillator and not on a harmonic or image frequency.

©John F. Rider, Publisher

HOWARD RADIO CO.

MODEL 400
MODEL 425
Schematics, Voltage

400

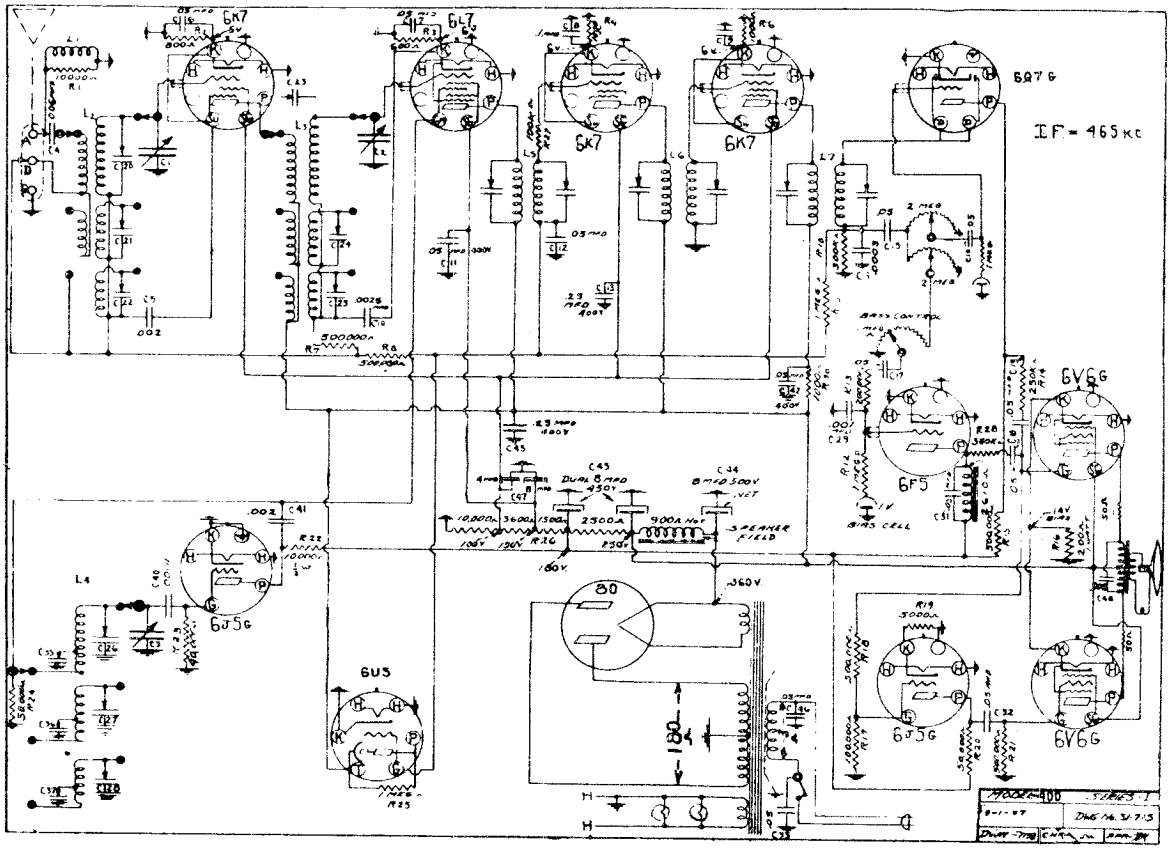

425

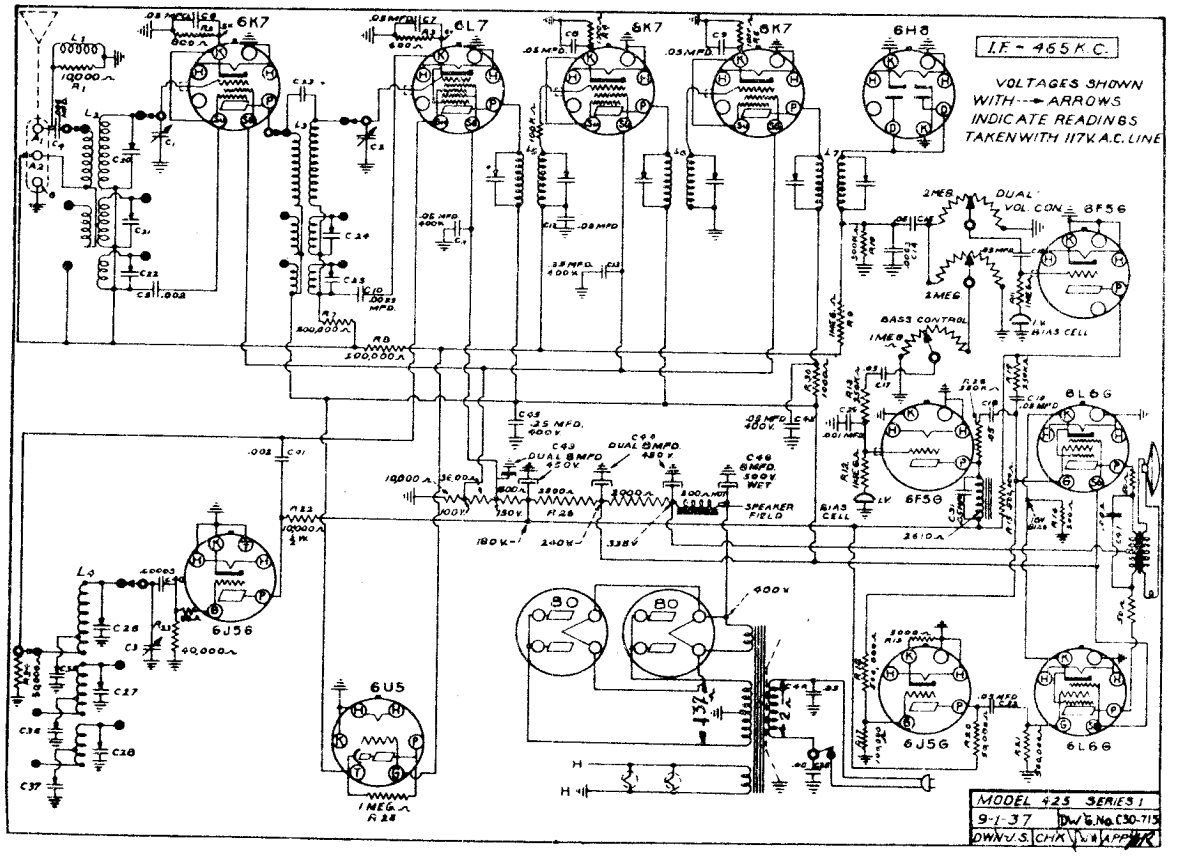

©John F. Rider, Publisher

MODEL 400-A
MODEL 425-A
Schematics, Voltage

HOWARD RADIO CO.

400-A

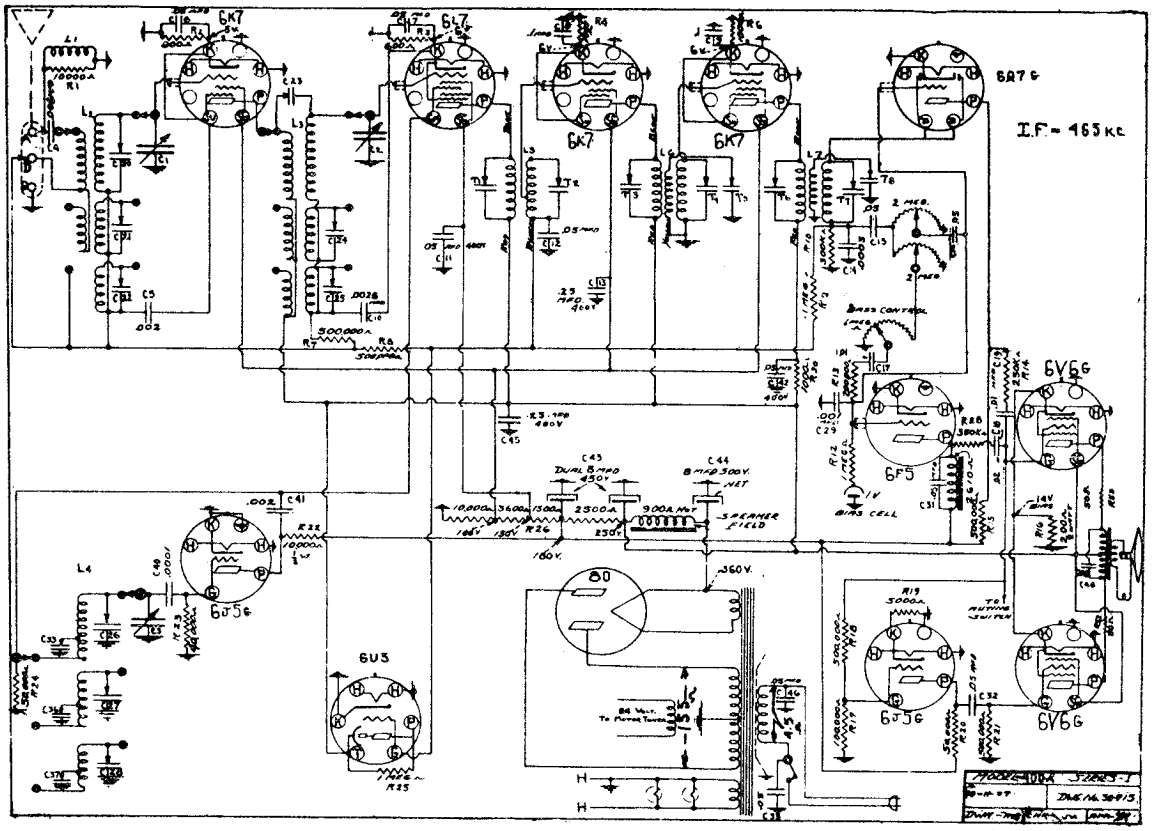

425-A

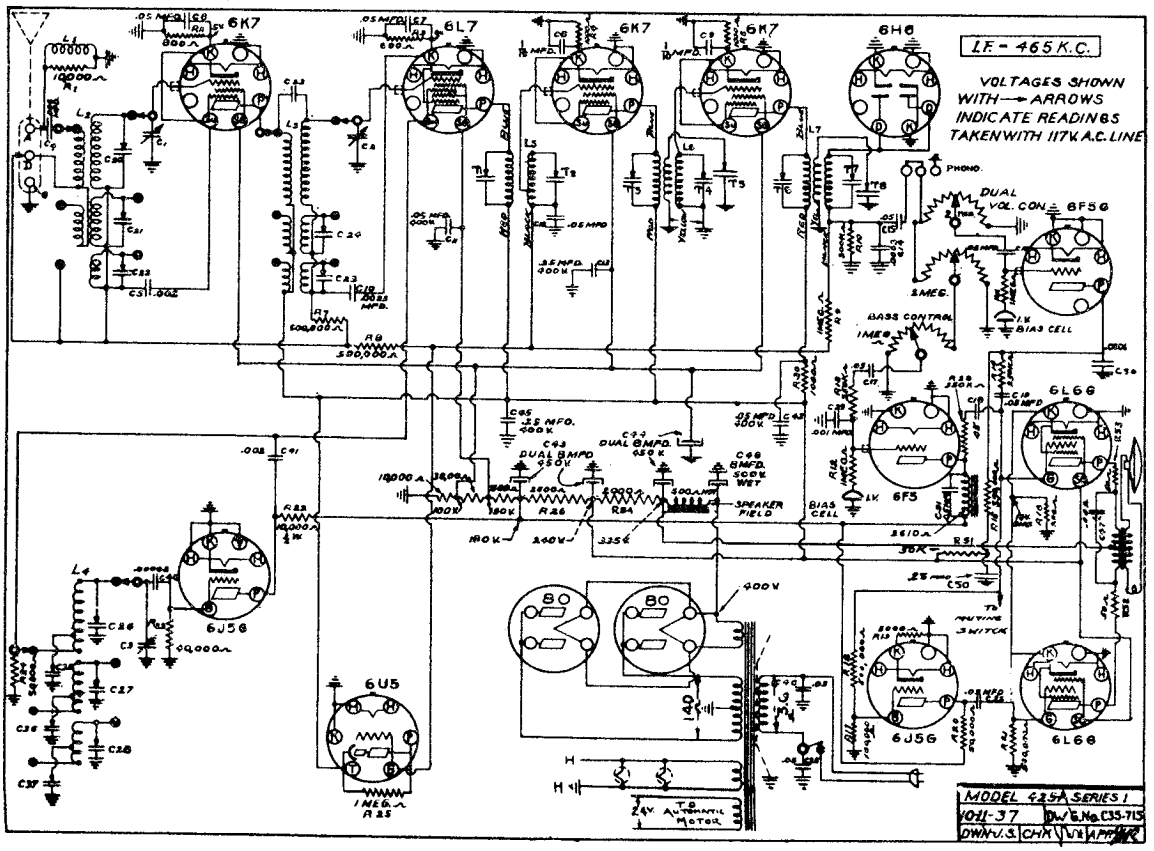

©John F. Rider, Publisher

HOWARD RADIO CO.

MODELS 400,400-A
MODELS 425,425-A
Parts,Phono.,Notes

MODEL 400A AND 425A

REPLACEMENT PARTS LIST

PART NO.	LIST PRICE	DESCRIPTION	400A CIRCUIT LOCATION	425A CIRCUIT LOCATION
AC-2	.30	Antenna Choke	L1	L1
7601	.30	Bias Cell - 1 Volt		
14-212	.90	Choke - Audio		
34-936	2.20	Coil - 1st. I. F. Assembly, 400A-425A	L5	L5
35-936	2.20	Coil - 2nd. I. F. Assembly, 400A-425A	L6	L6
36-936	2.20	Coil - 3rd. I. F. Assembly, 400A-425A	L7	L7
3681	3.50	Coil - Antenna Assembly, Complete	L2	L2
3682	3.50	Coil - Interstage Assembly, Complete.	L3	L3
3683	3.50	Coil - Oscillator Assembly, Complete.	L4	L4
25-262	.25	Condenser - 5 Plate - Padding	C35	C35
26-262	.30	Condenser - 9 Plate - Padding	C36	C36
27-262	.40	Condenser - 13 Plate - Padding	C37	C37
23-270	7.00	Condenser - Variable, 3 Gang, 400A-425A	C1, C2, C3	C1, C2, C3
17-266	1.20	Condenser - 8 Mfd. 475 Volt (Wet)	C44	C48
29-266	1.75	Condenser - 8-8 Mfd. 450 Volt	C43	C43, C44
	.16	Condenser - .1 Mfd. 200 Volt	C8, C9	C8, C9
	.16	Condenser - .05 Mfd. 200 Volt	C6, C7, C12, C15 C16, C31	C6, C7, C12, C31 C15, C16, C17
	.16	Condenser - .05 Mfd. 400 Volt	C11, C32, C42	C11, C32, C42 C18, C19
	.20	Condenser - .05 Mfd. 400 Volt - Moulded	C33, C46	C35, C46
	.16	Condenser - .02 Mfd. 400 Volt	C18	
	.16	Condenser - .25 Mfd. 400 Volt	C13, C45	C45, C50, C13
	.16	Condenser - .002 Mfd. 600 Volt	C41, C48	C41, C47
	.16	Condenser - .01 Mfd. 400 Volt	C19, C17	
	.16	Condenser - .006 Mfd. 600 Volt	C4	C4
1801	.25	Condenser - .001 Mfd. Mica	C29	C29
2287	.25	Condenser - .002 Mfd. Mica	C5	C5
2356	.16	Condenser - .0001 Mfd. Mica	C40	C50
8304	.16	Condenser - .0003 Mfd. Mica	C14	C14
8305	.25	Condenser - .0025 Mfd. Mica	C10	C10
	.16	Condenser - .00005 Mfd. Mica		C40
12-278	.90	Control - Bass with Switch		
25-281	1.35	Control - Volume - Dual Section		
1-280	.40	Cord - A.C. Line and Plug		
9-4627	1.25	Dial Glass - Calibrated 32-310.		
7-235	.01	Dial Glass Clip		
16-448	.20	Dial Hand		
3-638	.01	Knurled Head Screw for Hand 6-32 x 1/2		
8-448	.15	Band Spread Hand		
17-352	1.25	Escutcheon		
10-427		Escutcheon Glass		
	.12	Channel Rubber for above - 22"		
6-235	.01	Escutcheon Mounting Clip		
1-553	.01	Speed Nut for Escutcheon		
22-720	.04	Drive Shaft		
4-328	.10	Drive - Idler Disc - Pyralin, 3"		
4-331	.05	Friction Disc Assembly		
7808	.04	Grommet - Live Rubber for 3/8" hole		
986	.04	Grommet - Chassis Mounting		
19-490	.15	Knob - Large		
19-4900	.15	Knob - Large, Coded for Band Switch		

PART NO.	LIST PRICE	DESCRIPTION	400A CIRCUIT LOCATION	425A CIRCUIT LOCATION
2-498	.12	Lamp - Dial, Bayonett Type		
	.12	Resistor - 50 Ohm 1/2 Watt		
	.15	Resistor - 200 Ohm 2 Watt		
	.12	Resistor - 600 Ohm 1/3 Watt		
	.12	Resistor - 800 Ohm 1/3 Watt		
	.12	Resistor - 1,000 Ohm 1/3 Watt		
	.15	Resistor - 2,000 Ohm 2 Watt		
	.12	Resistor - 5,000 Ohm 1/3 Watt		
	.12	Resistor - 10,000 Ohm 1/3 Watt		
	.15	Resistor - 10,000 Ohm 1/2 Watt		
	.15	Resistor - 40,000 Ohm 1/2 Watt		
	.12	Resistor - 50,000 Ohm 1/3 Watt		
	.12	Resistor - 100,000 Ohm 1/3 Watt		
	.15	Resistor - 100,000 Ohm 1/2 Watt		
	.12	Resistor - 200,000 Ohm 1/3 Watt		
	.12	Resistor - 250,000 Ohm 1/3 Watt		
	.12	Resistor - 350,000 Ohm 1/3 Watt		
	.12	Resistor - 500,000 Ohm 1/3 Watt		
	.12	Resistor - 500,000 Ohm 1/2 Watt		
	.12	Resistor - 1 Megohm 1/3 Watt		
3-535	1.20	Resistor - Candohm - 4 Section		
	.04	Screw - Wing, for Chassis Mounting		
	.15	Socket - Pilot Light		
	.15	Socket - 4 Prong		
	.15	Socket - 8 Prong		
	.15	Socket - 5 Prong (Special)		
38-610	8.00	Speaker - 12" - (Model 400A)		
39-610	14.25	Speaker - 15" - (Model 425A)		
22-914	1.75	Switch - Wave Band, 3 Position		
33-938	6.00	Transformer - Power - (Model 400A)		
34-938	7.00	Transformer - Power - (Model 425A)		
8-771	.65	Tuning Eye Socket and Cable		
21-400	.04	Tuning Eye Sleeve		

400A CIRCUIT LOCATION	425A CIRCUIT LOCATION
R52, R53	R52, R53
R16	R16
R3	R3
R2	R2
R6, R4, R30	R30, R4, R6
	R54
R19	R19
R1	R1
R22	R22
R23	R23
R20, R24	R20, R24, R51
R17	R17
R13	R13
R14	R14
R10	R10
R28	R15, R28
R18, R15, R8, R21	R8, R18, R21
R7	R7
R9, R12	R9, R12
R26	R26

PARTS FOR MOTOR AUTOMATIC

PART NO.	LIST PRICE	DESCRIPTION
1-548	5.75	Automatic Tuning Motor.
7-917	2.50	Selector Button Switch.
13-6020	.90	Selector Cable with Plug.
8-772	.20	Selector Socket for above.
8-917	.30	Switch - S.P.S.T. Toggle (Muting Switch).
20-352	1.00	Escutcheon for Push-Buttons.
1-285	2.60	Commutator Disc Assembly, Complete.
5-450	.25	Selector Brush Holder (Station Contactor) with washers.
1-575	.15	Contactor Pin for above (Steel) No. 2-575 for carbon type.
49-786	.05	Spacer for mounting rear hard.
19-448	.20	Dial Hand (Rear)
4-658	.10	Numbered Screws - (4-36 x 3/16).
6-829	.10	Spring Coil Type - 3/8 long (For Contact Pin).
5-829	.10	Spring - Coil Type, for contact sleeve.
	.03	Screws - # 6 x 1/4", knurled (Button Plate).
8-502	.30	Station Lettered Tab Sheet.
	.06	Contact lugs for Button Assembly.
	.05	Push Buttons.

PARTS FOR MODELS 400 AND 425
Same as above with following exceptions:

PART NO.	LIST PRICE	DESCRIPTION	LOCATION
20-936	$1.30	Coil 1st. I. F. Assembly	C1, 2, 3
22-936	1.30	Coil 2nd. I. F. Assembly	
28-936	1.30	Coil 3rd. I. F. Assembly	

PART NO.	LIST PRICE	DESCRIPTION	LOCATION
22-270	$6.00	Condenser 3 Gang	
31-938	5.50	Power Transformer Model 400	
32-938	6.25	Power Transformer Model 425	

THE ADAPTION OF THE SET FOR USE WITH PHONOGRAPH

Out of the back of the chassis there extends three lugs as shown in Diagram Fig. 1.
For phonograph use, the jumper is removed and a single pole, double throw switch is connected as shown in Fig. 2. The pick-up leads from the pick-up are connected to Nos. 1 and 2 terminals, with the overall shield grounded to No. 3 terminal.

THE OVERALL SENSITIVITY for all models 425,425-A,400,400-A will be from 1 to 3 microvolts.

THE MAXIMUM OUTPUT for the models 400 and 400-A will be about 12 watts, undistorted 10 watts.

The models 425 and 425-A have maximum output of 20 and undistorted about 15 w

FIG. 1

FIG. 2

©John F. Rider, Publisher

MODELS 400,400-A
MODELS 425,425-A
Antenna Data, Notes
Tuner

HOWARD RADIO CO.

THE MODEL 400 is a 12 tube, 3 band receiver with all coils shielded. (See Fig. 4) for the coil location with its trimmers and padding condensers for each band. It has three stages of I. F. tuned to 465 KC. The 6F5 is a bass boost stage regulated by the bass control. The 6J5G is a phase inverter with push-pull 6V6Gs in the output. See schematic for further details.

THE MODEL 425 is a 14 tube set having the same R. F. and I. F. circuits as the Model 400. The output stage uses two 6L6Gs. See schematic.

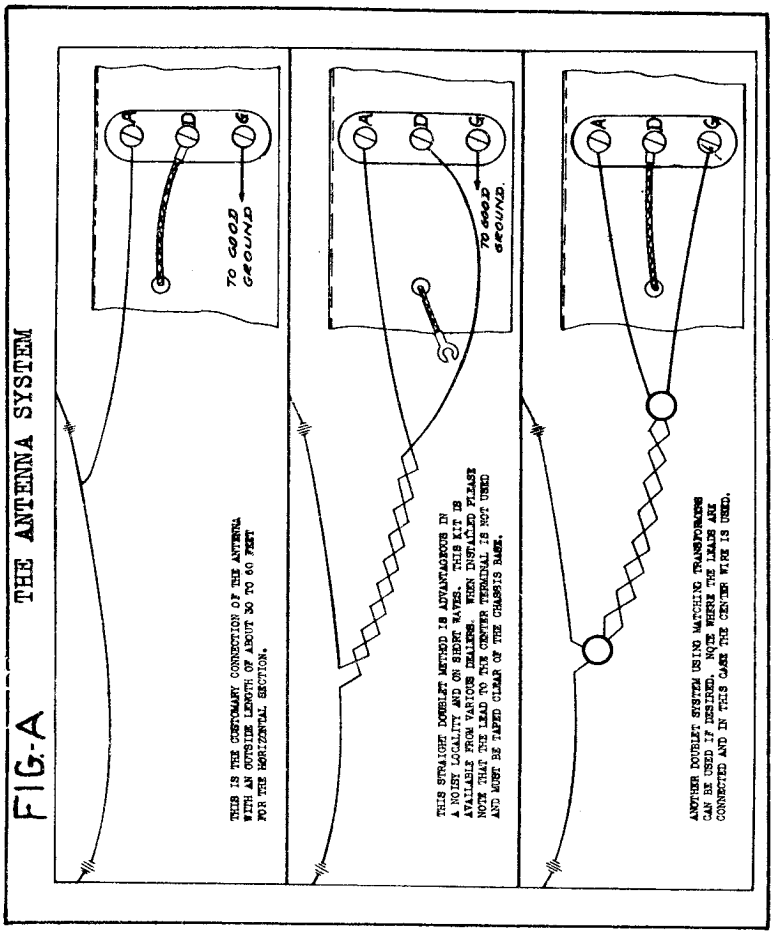

FIG-A

BE SURE SHORT JUMPER (ON OPPOSITE SIDE) IS AT THE TOP WHEN MOUNTING DISC INTO POSITION. ALSO GANG CONDENSER MUST BE AT FULL CAPACITY AND THE SLOTS IN THE DISC STRAIGHT ACROSS.

THE MODELS 400-A and 425-A have the same electrical circuit as the 400 and 425 respectively. (See Fig. 5) for coil location. These models employ the Howard motor automatic tuning feature by use of the reversible motor controlled by the commutator disc near the back of the set.

Set-up instructions are included in the following pages. Fig. 1 shows the schematic circuit of the motor system.

Should any replacement of a part on the contact-commutator system be necessary (See Fig. 2) for directions. In case of any trouble with the contacts or commutator disc, carefully examine the split groove to see if it is smooth and in good shape.

No trouble will be experienced with the motor itself. In shipment sometimes the motor shaft might get bent due to the tuning knob being struck.

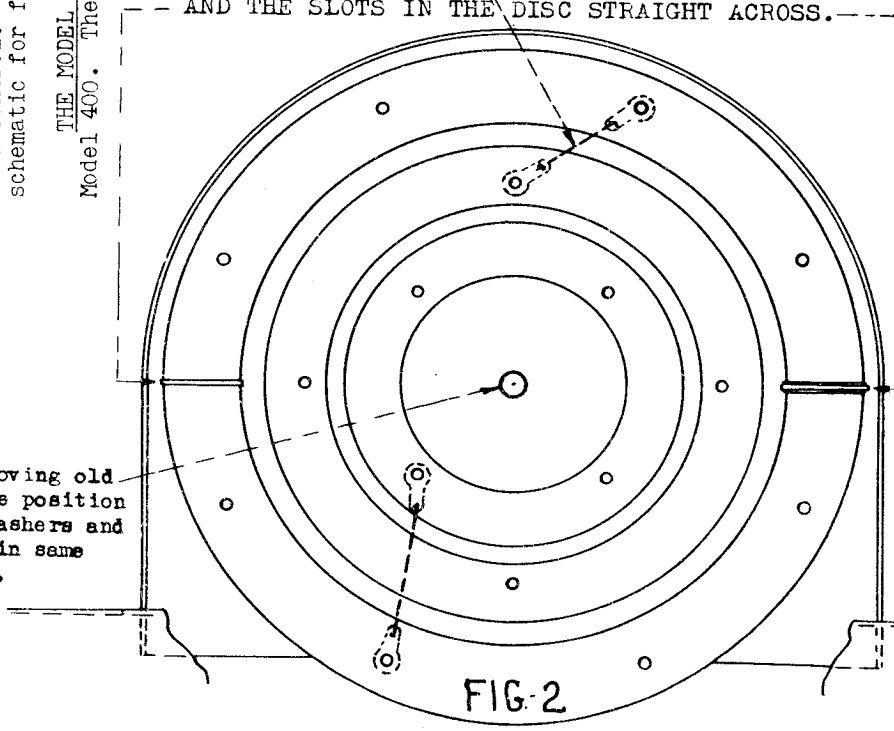

FIG-2

©John F. Rider, Publisher

HOWARD RADIO CO.

MODEL 400-A
MODEL 425-A
Tuner Data

ADJUSTMENT OF HOWARD MOTOR AUTOMATIC

FIRST - Select and depress the push-button by number that will include the desired station according to frequency chart listing below.-

1	2	3	4	5	6	7	8	AUTO OFF
540 to 580 KC	570 to 620 KC	600 to 670 KC	650 to 720 KC	700 to 820 KC	800 to 990 KC.	880 to 1720 KC	1100 to 1720 KC	

Frequency Chart Listing

NOTE - The above chart shows selector set-up for continuous coverage. However there are many alternate arrangements possible. Refer to the frequency calibration on selector back-plate for any other arrangement necessary for the particular locality.

SECOND - Reach to back of chassis and turn muting switch to OFF position.

LOCATE THE SAME NUMBERED STATIONS CONTACTOR ON BACK OF TUNING CONDENSER THAT CORRESPONDS TO THE BUTTON DEPRESSED IN FIRST PARAGRAPH, AND SLIDE UNTIL THE DESIRED STATION IS TUNED IN.

With the muting switch in the OFF position the stations will be heard while moving the slide contactor. For silent tuning after all adjustments are made, turn switch to ON position.

THIRD - Remove station call letter tab from tab sheet and insert in place with finger tip in front of escutcheon plate over the number that was selected. Repeat above procedure for each of remaining buttons.

NOTE - When tuning the set by hand or if a remote cable is used the selector button AUTO-OFF must be depressed.

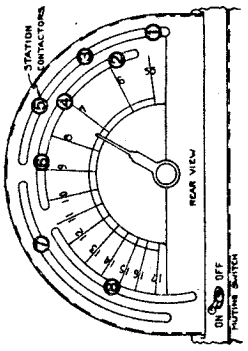

EXAMPLE

Station, WGN - Frequency 720 KC Button No.4 will tune 720 Kilocycles. Push-button No.4 is depressed. Muting switch turned to OFF position. Station contactor No.4 on back of tuning condenser is moved along its track until WGN is perfectly tuned in. WGN tab is removed from tab sheet and inserted over No.4 in the escutcheon. Muting switch is turned to ON position. WGN can now be automatically selected by its labeled push-button.

SUGGESTIONS

It will simplify setting up if the eight desired stations are first arranged in order according to frequency. Starting with the lowest frequency station first, let this be push-button No.1 and set up in rotation.

Be careful not to move a selector that has been already placed.

Check the adjustment of selector by the electric eye for maximum deflection.

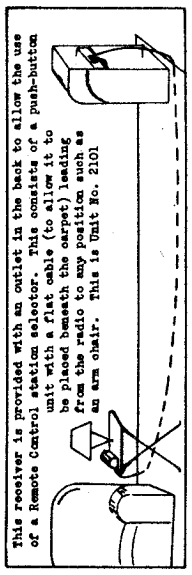

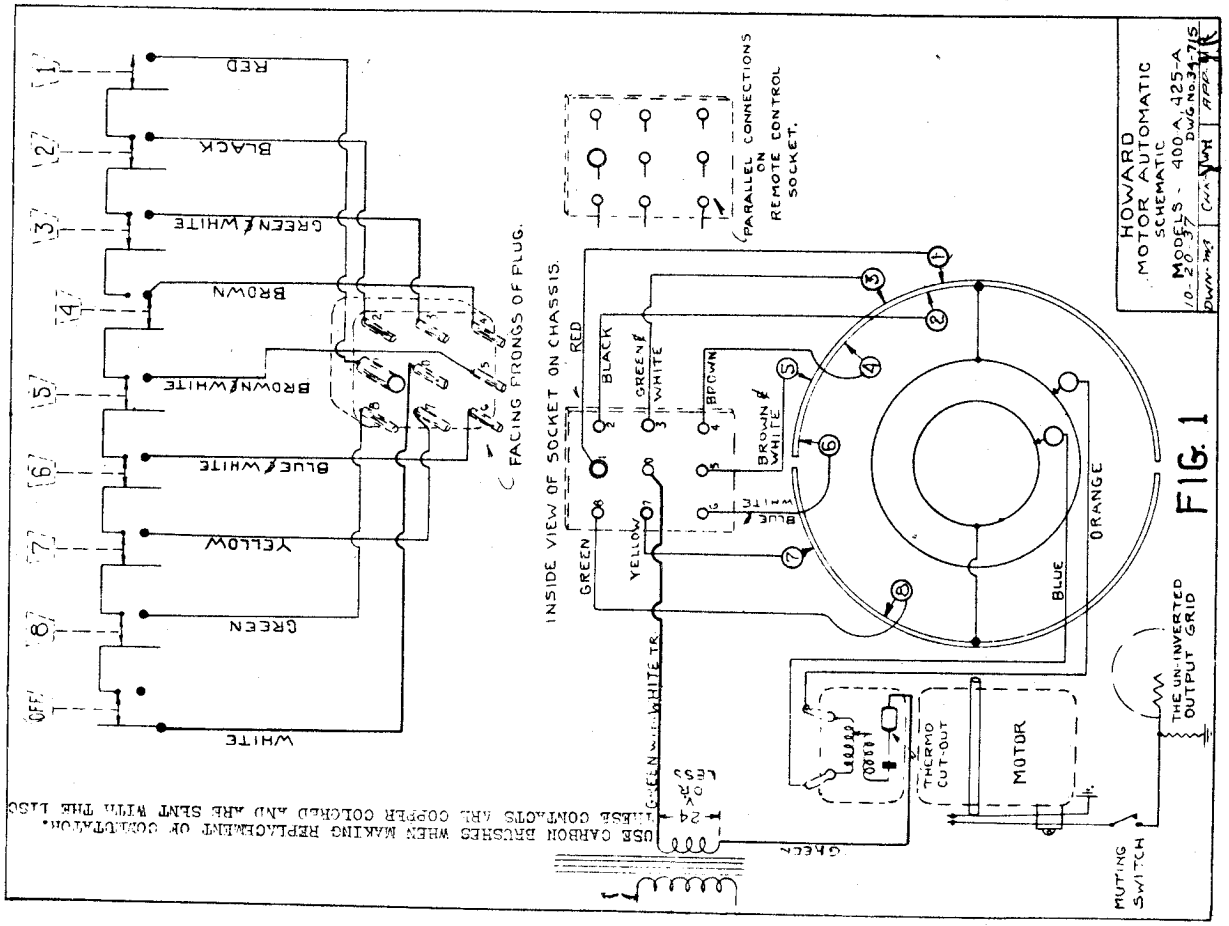

FIG. 1

©John F. Rider, Publisher

MODELS 400,400-A
MODELS 425,425-A
Socket,Trimmers

HOWARD RADIO CO.

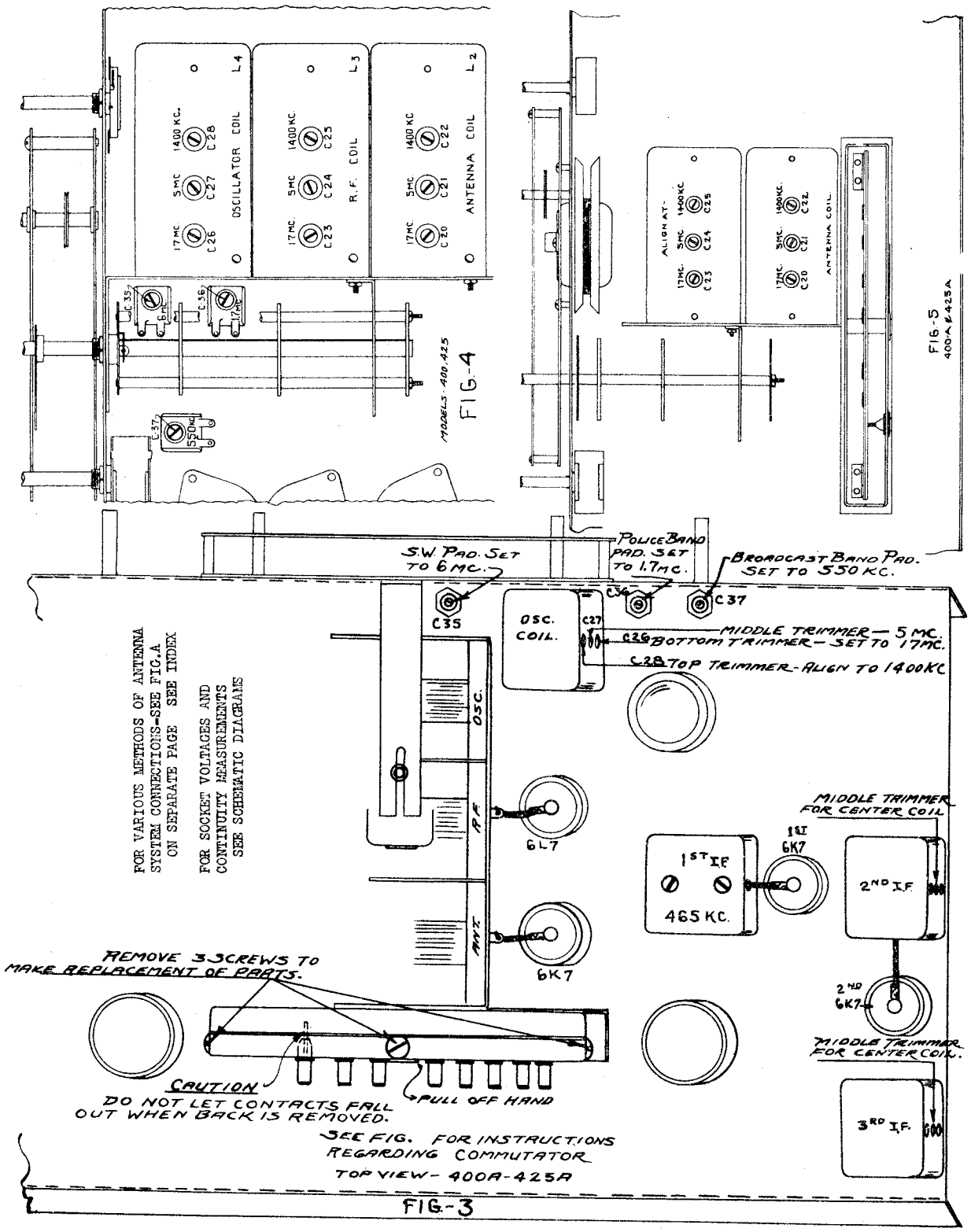

©John F. Rider, Publisher

©John F. Rider, Publisher

1. Seal all trimmers after their final adjustment.

2. Be sure that the settings are being made to the true fundamental signal from the oscillator and not on a harmonic or image frequency.

3. Refer to the schematic for the voltages at the tube sockets.

4. When making adjustments on the high band (5.5 to 18 megacycles), the position of the leads, by-pass condensers, and resistors are very critical at the 18 MC end of the band in their capacity relation to ground and other parts of the chassis. When the chassis leaves the factory these parts have been properly located.

When replacing the oscillator tube it is suggested that the set be checked at 18 MC since it is possible to have certain 6J5G tubes that will not oscillate at that frequency. Also low line voltage may reduce plate voltage to a point where the tube will not oscillate.

5. In cases of any instability in the audio circuits be sure the plate leads of the output tubes are not coupling with the grid lead of the inverter tube.

6. For hum trouble check the 6J5 tube first by replacing same. This may be caused by cathode leakage within the tube.

THE I. F. STAGES ON MODELS 400, 425

The I. F.'s are aligned by the usual system of feeding the intermediate frequency of 465 KC into the grid of the 6L7 tube.

The two trimmers in each of the I. F. cans should be very carefully peaked to resonance as they are very critical and will greatly affect the performance of the set.

The Sensitivity of the I. F. stages will be 15 to 20 microvolts or better for a 50 milliwatt output.

Always use as low an output as possible from the test oscillator in making the various adjustments.

ALIGNMENT OF FLAT TOP I. F. STAGES FOR MODELS 400A AND 425A. Fig. 3

The 1st. I. F. Transformer has the trimmer screws at the top of the can.

The 2nd. and 3rd. I. F. Transformers are aligned through the side of the cans. The middle trimmer is for the center winding.

Exact alignment can only be obtained by use of the oscillograph. However, if the following instructions are carefully carried out, the alignment will be found satisfactory.

FIRST: Open yellow ground leads for center coils which are seen below the 2nd. and 3rd. I. F. Transformers. Then feed a 465 KC signal into the grid of the first 6K7 tube. Align outside trimmers on both 2nd. and 3rd. I. F. Transformers.

SECOND: Resolder yellow leads to ground on both transformers. Take a 10,000 ohm resistor and a .1 mfd. condenser and connect them in series. This is now connected across the phono lugs from the two insulated ones to the ground lug. Connect generator lead to second 6K7 grid and with sufficient signal adjust center trimmer on output I. F. Transformer to resonance.

THIRD: Move generator lead to first 6K7 grid, remove condenser and resistor from the phono lugs and connect from the grid cap to ground of the second 6K7 tube. Now adjust center trimmer of 2nd. I. F. Transformer.

FOURTH: Move generator lead to 6L7 grid and adjust input I. F. to best response. Remove condenser and resistor from 2nd. 6K7 grid to the first 6K7 grid to ground. Readjust the first I. F. Trimmers to their new resonance points. Disconnect the resistor and condenser from 1st. 6K7 grid and solder a 50,000 ohm resistor from B+ to 6L7 plate and again check alignment of trimmers of 1st. I. F. If the I. F. has been aligned properly the set should tune into a station signal and hold about the same output level when moved 3 or 4 KC either side of the center of resonance. In other words, there is a flat top response of about 7 or 8 KC with this system.

If an oscilloscope and a frequency modulated generator are available it is advisable to recheck the trimmers of the input or 1st. I. F. Transformer for the flatness of response. The above procedure being first completed before the oscilloscope is used.

ALIGNMENT OF SHORTWAVE BAND 5.5 TO 18 M.C. MODELS 400, 425, SEE FIG. 4 MODELS 425A, 400A, SEE FIG. 3 AND FIG. 5

First check the position of the dial hand by rotating the condenser shaft to the left to full capacity. At this point the dial hand should be straight across in line with the lines dividing the scale in half. If the hand is off position it can be lined up by removing dial glass and setting hand with screw in center of dial.

1. Set the test oscillator to 17 megacycles.

2. Turn wave band switch all the way to right for highest S.W. band, and set dial hand to 17 M.C.

3. Peak trimmer condenser C 28 of the oscillator coil (See pictorial) to resonance with 17 M.C. fed into antenna.

4. Adjust antenna and R.F. coil trimmers C-20 and C 23 to same frequency after the above mentioned oscillator trimmer has been set.

5. Turn dial hand to 6 M.C. on same band and peak padding condenser C 35 to 6 M.C.

III SHORTWAVE BAND 1.7 TO 5.5 M.C.

1. Set band switch to this band and dial hand to 5 M.C.

2. Peak trimmer C 27 to 5 M.C.

3. Peak antenna and R.F. trimmers C-21 and C-24 to 5 M.C.

4. Rotate dial to 1.7 M.C. and adjust Padding Condenser C 36 to 1.7 M.C.

NOTE: After adjusting the two high bands at 17 megacycles and 5 megacycles the test oscillator input to antenna should be increased and receiver dial advanced to .9 megacycle lower and note if test oscillator signal is heard.

In case there is no response the oscillator trimmers have been pulled down too tightly. The trimmers should be released until this condition exists then go back to original point of alignment - reduce antenna input voltage and correct the trimmer adjustment.

EXAMPLE: The receiver has been adjusted to 17 megacycles. Tune receiver to approximatly 16.9 M.C.

Increase oscillator signal by "opening up" the attenuator. Move the dial back and forth at 16.9 M.C.

If no signal is heard, let oscillator trimmer off until it is heard at 16.9 M.C.

Reduce signal voltage from generator, go back to 17 M.C. and slightly correct this last trimmer adjustment.

The same thing applies to the 5 M.C. adjustment.

IV THE BROADCAST BAND

1. Turn wave band switch all the way to left and dial hand set to 1400KC (the top scale).

2. Peak oscillator trimmer C 28 to 1400 KC and R.F. circuit trimmers C-22 and C-25 to same frequency.

3. Set dial hand to 550 KC and adjust oscillator padding condenser C 37 to 550 KC.

4. Recheck dial at 1400 KC as in number (1) and (2).

5. Points in the middle of the dial may be checked and if necessary the plates of the front section of variable condenser may be bent for alignment.

MODEL 59
MODEL 200
Schematics, Voltage

HOWARD RADIO CO.

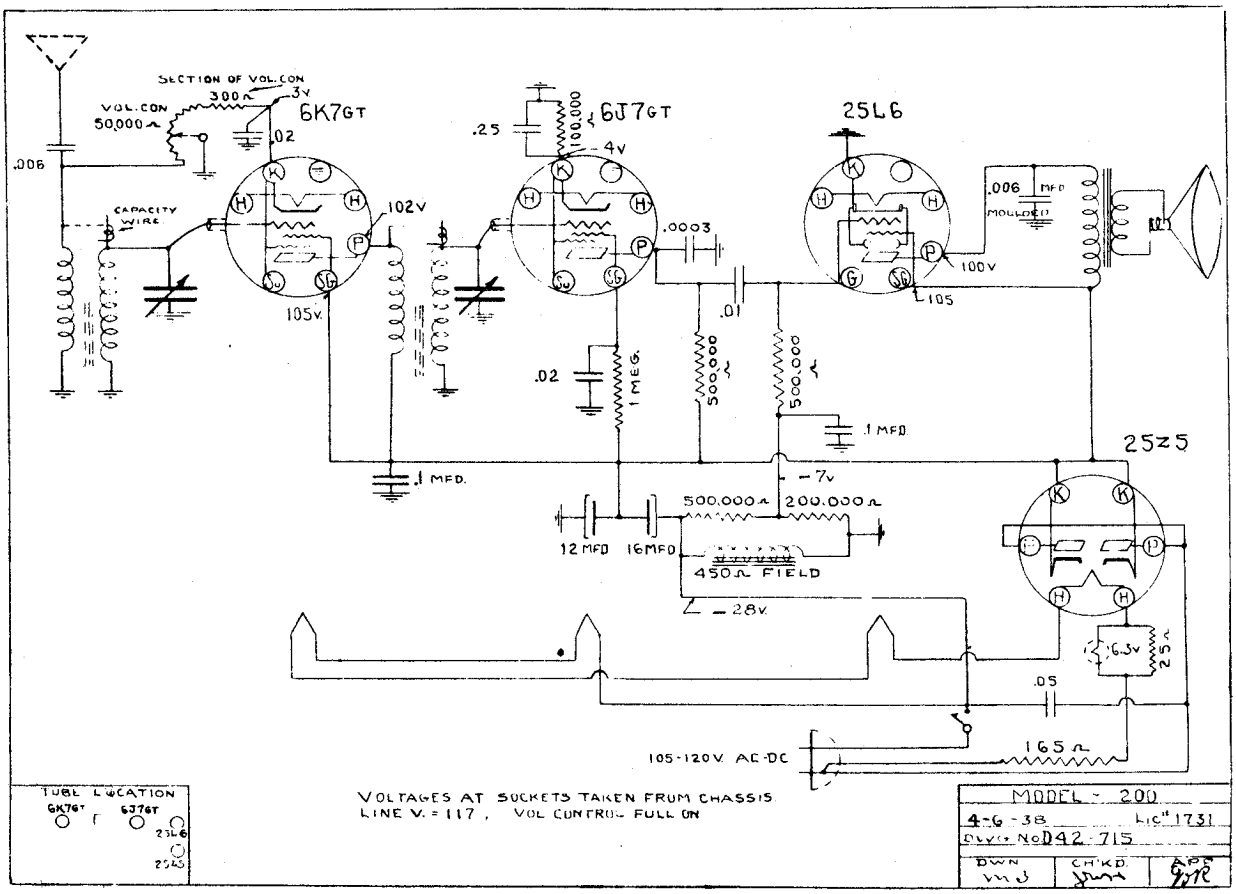

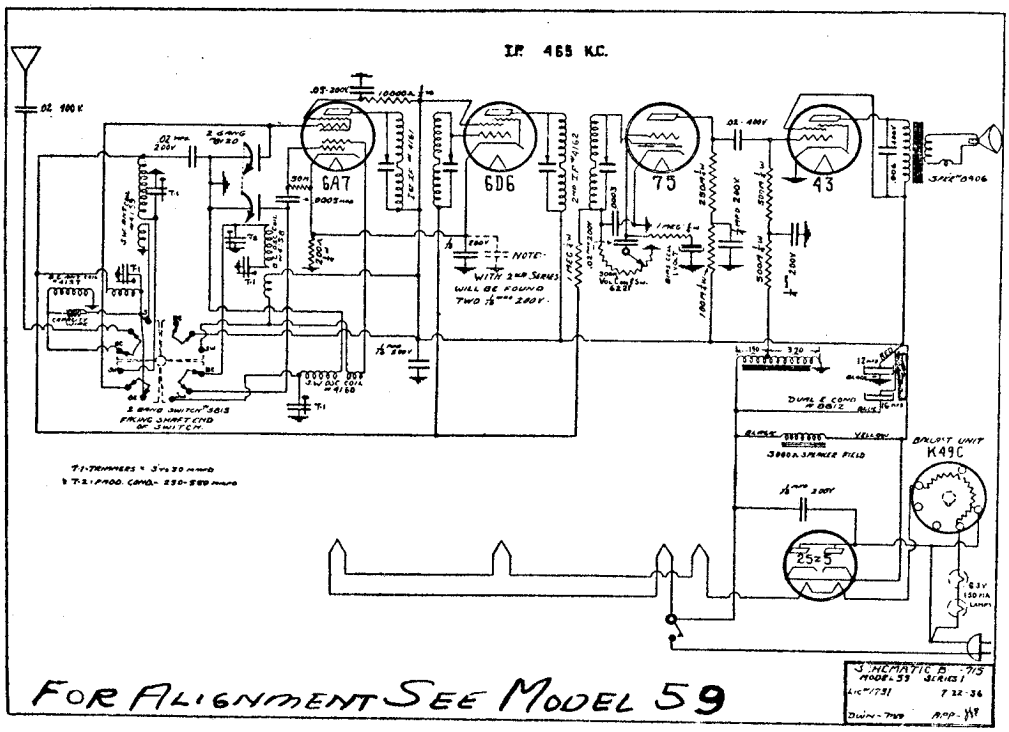

©John F. Rider, Publisher

HUDSON MOTOR CAR CO.

MODEL CB-6
Schematic, Socket Trimmers, Align. Circuit

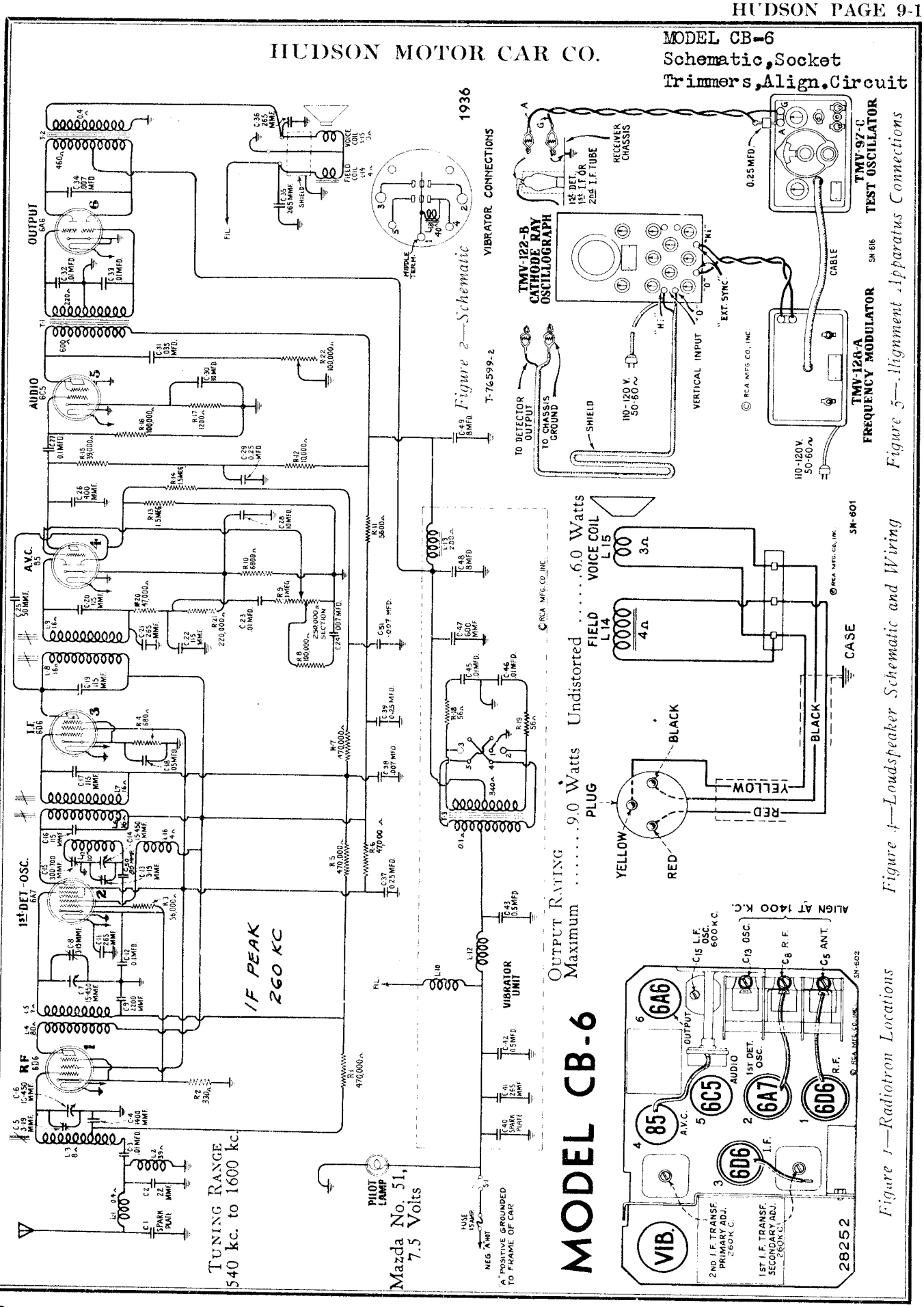

Figure 1—Radiotron Locations

Figure 2—Schematic

Figure 3—Alignment Apparatus Connections

Figure 4—Loudspeaker Schematic and Wiring

©John F. Rider, Publisher

MODEL CB-6
Chassis Wiring

HUDSON MOTOR CAR CO.

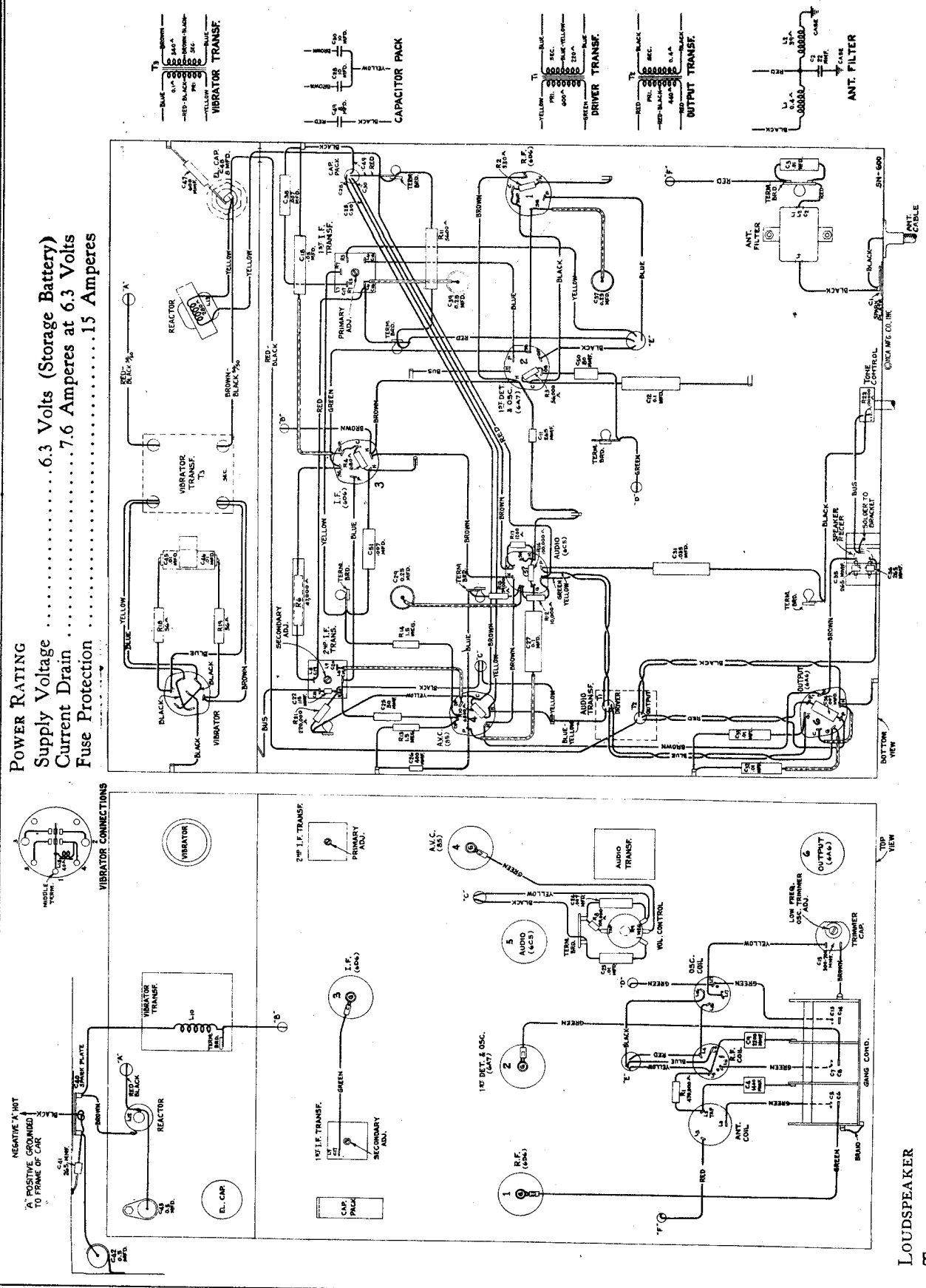

POWER RATING
Supply Voltage .....6.3 Volts (Storage Battery)
Current Drain .....7.6 Amperes at 6.3 Volts
Fuse Protection .....15 Amperes

LOUDSPEAKER
Type .....Electrodynamic
Impedance (v.c.) .....3.0 ohms at 400 cycles

Figure 3—Chassis Wiring Diagram

©John F. Rider, Publisher

©John F. Rider, Publisher

This alignment refers to several models, see notes on next page.

TUBE COMPLEMENT *MODEL CB-6*

(1) RCA-6D6.....Radio Frequency Amplifier (4) RCA-85...Detector, A-F Amplifier, and A.V.C.
(2) RCA-6A7.....Oscillator and First Detector (5) RCA-6C5..... Driver
(3) RCA-6D6.....Intermediate Amplifier (6) RCA-6A6.....Power Output Amplifier

ALIGNMENT FREQUENCIES

I-F Transformers	260 kc.	Detector Coil	1400 kc.
Oscillator Coil	600 kc. and 1400 kc	Antenna Coil	1400 kc.

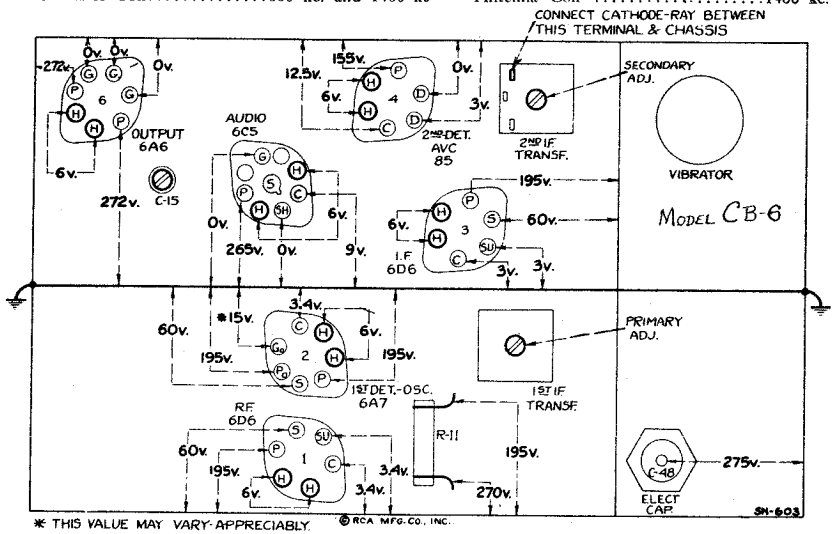

Figure 6—Radiotron Socket Voltages to Chassis

(Measured at 6.3 volts battery supply—Volume Control Maximum—No Signal)

Alignment Procedure

All of the adjustable circuits of this receiver have been properly aligned at the factory to give correct performance, and their settings should remain intact indefinitely when the receiver is used under ordinary conditions. However, necessity for readjustment may occasionally occur from continued extremes of climate, tampering, purported alteration for service purposes, or after repairs have been made to the r-f or i-f tuned circuits. Improper alignment usually causes the receiver to be insensitive, non-selective, and subnormal in respect to tone quality. Such indications will usually exist simultaneously.

In readjusting the tuning circuits, it is important to apply a definite procedure and to use adequate and reliable test equipment. A standard test oscillator, such as the RCA Stock No. 9595, will be required as the source of signal at the specified alignment frequencies. Means for indication of the receiver output during alignment is also necessary to accurately show when the correct point of adjustment is reached. Two indication methods are applicable. One requires use of cathode-ray oscillograph equipment, and the other requires a voltmeter or glow type of indicator. The cathode-ray alignment method is advantageous in that the indication provided is in the form of a wave image which represents the resonance characteristics of the circuits being tuned. This type of alignment is possible through use of apparatus such as the RCA Stock No. 9558 Frequency Modulator and the RCA Stock No. 9545 Cathode-Ray Oscillograph. Alignment by the output meter method should be indicated by an instrument such as the RCA Stock No. 4317 Neon Glow Indicator. The two procedures are outlined as follows:

OUTPUT METER ALIGNMENT

Place the receiver in operation, with its two covers removed. Attach the output indicator across the loudspeaker voice coil circuit or across the output transformer primary. Advance the receiver volume control to its maximum position, letting it remain in such position for all adjustments. For each adjusting operation, regulate the test oscillator output control so that the signal level is as low as possible and still observable at the receiver output. Use of such small signal will obviate broadness of tuning which would otherwise result from a.v.c. action on a stronger one.

I-F Adjustments

(a) Connect the output of the test oscillator to the control grid cap of the i-f tube (RCA-6D6) through a 0.25 mfd. capacitor and connect the ground of the oscillator to the receiver chassis. Adjust the frequency of the oscillator to 260 kc. Tune the receiver to a point where no interference is received from the heterodyne oscillator or local stations.

(b) Adjust the two screws (attached to iron cores) of the second i-f transformer, one on top and one on bottom, until maximum output is produced by the indicating device.

(c) Remove the oscillator from the i-f tube input and connect it between the control grid cap of the first detector tube (RCA-6A7) and chassis-ground, using the 0.25 mfd. capacitor as previously. Allow its tuning to remain at 260 kc. Tune the receiver to avoid interference as in (a).

(d) Adjust the two screws of the first i-f transformer for maximum (peak) receiver output. The indication for this adjustment will be broad, due to the "flat-top" characteristic of the i-f system. The two screws should, therefore, be very carefully adjusted so that the indicator remains fixed at maximum as the oscillator is shifted through a range 2 kc. above and below its normal setting of 260 kc. An irregular double-peaked indication is to be avoided.

R-F Adjustments

NOTE: To eliminate vibrator interference, it may be advisable to replace the bottom cover before making the r-f adjustments.

(a) Check the calibration of the dial scale of the remote control unit by rotating the tuning control until the variable condenser plates are in full mesh (maximum capacity). This will carry the dial pointer to its minimum frequency position. The knurled shaft at the rear of the control box should then be turned until the dial pointer sets exactly on the last graduation at the low-frequency end of the dial scale.

(b) Connect the output of the test oscillator to the antenna-ground terminals of the receiver with a 150 mmfd. capacitor in series with the antenna lead. There should be a shunt capacitor of 50 or 60 mmfd. from the antenna lead at the receiver to ground. Tune the oscillator to 1400 kc. Allow the output indicator to remain attached to the receiver output.

(c) Tune the receiver so that the dial reading is 1400 kc. Then adjust the oscillator, detector, and antenna coil trimmers, C-13, C-8, and C-5 respectively, tuning each to the point producing maximum indicated receiver output.

(d) Shift the oscillator frequency to 600 kc. and tune the receiver to pick up this signal, disregarding the dial reading at which it is best received. The oscillator series trimmer, C-15, should then be adjusted, simultaneously rocking the receiver tuning control backward and forward through the signal until maximum (peak) receiver output results from the combined operations. The adjustment of C-13 should be repeated as in (c) to correct for any change in its alignment due to the adjustment of C-15.

NOTE: The antenna coil has an iron core which is adjusted at the factory for the correct inductance. **This adjustment should not be disturbed.**

CATHODE-RAY ALIGNMENT

Attach the cathode-ray oscillograph vertical input terminals to the second detector output, with the "Hi" connected to the junction of the two resistors, R-20 and R-21, and the "0" connected to the receiver chassis. Advance the vertical amplifier gain control of the oscillograph to full-on, allowing it to remain at such position for all adjustments. Turn the vertical "A" amplifier to "On." Set the oscillograph power switch to "On" and adjust the intensity and focusing controls to give a sharply defined spot on the screen. Interconnect the frequency modulator impulse generator terminals to the oscillograph "Ext. Sync." terminals, as shown by Figure 5.

I-F Adjustments

(a) Connect the output of the test oscillator to the control grid cap of the i-f tube (RCA-6D6) through a 0.25 mfd. capacitor and connect the ground of the oscillator to the receiver chassis. Tune the oscillator to 260 kc., place its modulation switch to "On" and its output range switch to "Hi." The frequency modulator must not be connected to the oscillator for the preliminary adjustments.

(b) Set the cathode-ray oscillograph horizontal "B" amplifier to "Timing" and the synchronizing switch (timing) to "Int." Place the synchronizing input and frequency controls to about their mid-positions. Turn the range switch to its No. 1 position.

(c) Increase the output of the oscillator until a deflection is noticeable on the oscillograph screen. The figure obtained represents several waves of the detected signal, the amplitude of which may be observed as an indication of output. Cause the wave image formed (400-cycle waves) to be spread completely across the screen by advancing the horizontal "B" gain control. The image should be synchronized and made to remain motionless by adjustment of the synchronizing input and frequency controls.

(d) Adjust the two screws (attached to iron cores) of the second i-f transformer, one on top and one on bottom, to produce maximum vertical deflection of the oscillographic wave which is present on the screen. This adjustment places the transformer in exact resonance with the 260 kc. signal.

continued on next page

©John F. Rider, Publisher

CB-6 alignment-continued

(e) The sweeping operation should follow, using the frequency modulator. Shift the oscillograph synchronizing switch to "Ext.", change its range switch to No. 2 position and set the frequency control to its mid-position. Place the frequency modulator in operation, with its sweep range switch in the "Lo" position. Interconnect the test oscillator and frequency modulator with the special shielded patch cord provided. Turn the oscillator modulation switch to "Off."

(f) Increase the frequency of the test oscillator by slowly turning its tuning control until two separate, distinct, and similar waves appear on the screen. These waves will be identical in shape, but will be totally disconnected and appearing in reversed positions. They will have a common base line, which is discontinuous. Adjust the frequency and synchronizing input controls of the oscillograph to get the proper waves and to make them remain motionless on the screen. Continue increasing the oscillator frequency until the forward and reverse curves move together and overlap, with their highest points exactly coincident. This condition will obtain at an oscillator setting of approximately 360 kc.

(g) With the images established as in (f), readjust the two screws on the second i-f transformer so that they cause the curves on the oscillograph screen to become exactly coincident throughout their lengths and have maximum amplitude.

(h)[10] Without altering the adjustments of the apparatus, shift the output connections of the oscillator to the input of the i-f system, i. e., between the first detector (RCA-6A7) control grid and ground.[20] Regulate its output so that the amplitude of the oscillographic image is approximately the same as used above for adjustment (g) of the second i-f transformer.

(i) The two first i-f transformer adjustment screws, one on top and one on bottom, should then be adjusted so that they cause the forward and reverse curves to become coincident throughout their lengths and have maximum amplitude. The composite wave obtained in this manner represents the resonance characteristic of the total i-f system. Lack of symmetry or irregularity of the resultant image will indicate the presence of a defect in the i-f system.

R-F Adjustments

(a)[11] Calibrate the scale of the receiver by rotating the tuning control until the variable condenser is at full mesh, and then turning the knurled shaft at the rear of the control box to bring the dial pointer to the last graduation at the low-frequency end of the scale.

(b)[12] Attach the output of the test oscillator to the receiver input, i. e., between the antenna and ground terminals, with a 150 mmfd. capacitor in series with antenna lead. There should be a shunt capacitor of 50 or 60 mmfd. from the antenna lead at the receiver to ground. Accurately tune the oscillator to 1400 kc. The oscillograph should be left connected to the second detector output circuit as for the above i-f adjustments. Return the synchronizing switch to its "Int." position and turn the range switch to its No. 1 position.

(c)[13] Tune the receiver to a dial reading of 1400 kc. Then regulate the oscillator output so as to increase the amplitude of the waves on the oscillograph screen to a conveniently observable size. The several waves of detected signal, as appearing on the screen, should be synchronized by operation of the synchronizing and frequency controls. Trimmers, C-13, C-8, and C-5, of the oscillator, detector, and antenna coils should then be adjusted so that each causes maximum vertical deflection (amplitude) of the images.

(d) The oscillator modulation should then be turned to "Off" and the frequency modulator placed in operation, connected to the oscillator with the shielded patch cord. Change the oscillograph synchronizing switch to "Ext.", set its range switch to its No. 2 position and the frequency control slightly above its mid-position.

(e) Increase the frequency of the test oscillator gradually, until the point is reached where the two similar, distinct and separate wave images appear on the screen and become coincident at their highest points. This will occur at an oscillator setting of approximately 1500 kc. These waves should be synchronized on the oscillograph screen by careful readjustment of the synchronizing and frequency controls. Readjust trimmers, C-13, C-8, and C-5[14] to produce complete coincidence at maximum amplitude of the two waves.

(f) Disconnect the frequency modulator from the oscillator. Place the modulation switch of the oscillator to "On" and tune the oscillator to 600 kc. Set the synchronizing switch of the oscillograph to "Int." and turn the range switch to No. 1 position.

(g) Tune the receiver station selector control so as to pick up the 600 kc. signal, disregarding the dial reading at which it is best received.

(h) Change the oscillograph synchronizing switch to "Ext." and place the oscillator modulation switch to "Off." Interconnect the frequency modulator and oscillator with the special shielded patch cord. Return the range control of the oscillograph to its No. 2 position and set the frequency control slightly above its mid-position.

(i) Shift the test oscillator to its 200-400 kc. range and tune it to the point at which the forward and reverse waves show on the oscillograph screen. This condition will obtain at an oscillator setting of approximately 230 kc. The signal obtained from the oscillator for this adjustment will be the third harmonic of 200 kc. An increase in the oscillator output may be necessary. The trimmer C-15[15] should then be adjusted to the point which produces maximum amplitude of the oscillographic images. It will not be necessary to rock the tuning control for this adjustment, inasmuch as the frequency modulator is varying the signal in an equivalent manner.

(j) Retune trimmers C-13, C-8, and C-5[16] as in (c), (d), and (e) to correct for any change in high-frequency alignment which may have been caused by the adjustment of C-15.[17]

After the receiver has been replaced in the car, it may be necessary to make a final correction of the dial pointer by tuning in a station of known frequency and adjusting the pointer by means of the knurled shaft on the rear of the control head.[18]

Reference Notes;

Note	MODEL SA-37	MODEL DB-37
1	Tube is 6 K 7	Tube is 6 K 7
2	Tube is 6 A 8	Tube is 6 A 7
3	as follows;	as for SA 37

The slotted screw-head on the top of the control box should then be turned until the dial scale sets exactly on the last graduation at the low-frequency end of the dial scale.

4	as follows;	as for SA 37

(b) Connect the output of the test oscillator to the antenna-ground cable of the receiver with a 300 mmfd. capacitor in series with the antenna lead. If the antenna lead-in is used, the value of this capacitor should be 210 mmfd. Tune the oscillator to 1,400 kc. Allow the output indicator to remain attached to the receiver output.

5	C14, C9, & C5.	as for CB-6
6	substitute	as for CB-6

(d) Shift the oscillator frequency to 600 kc. and tune the receiver to pick up this signal, disregarding the dial reading at which it is best received. The oscillator series trimmer, C-12, should then be adjusted, simultaneously rocking the receiver tuning control backward and forward through the signal until maximum (peak) receiver output results from the combined operations. The adjustment of C-14, C-9, and C-5 should be repeated as in (c) to correct for any change in their alignment due to the adjustment of C-12.

NOTE: The antenna coil has a magnetite core which is adjusted at the factory for the correct inductance. **This adjustment should not be disturbed.**

7	R6 & R8	as for CB-6
8	(RCA-6K7)	(RCA-6 K7)
9	magnetite core	magnetite core
10	as follows;	as for CB-6

(h) Without altering the adjustments of the apparatus, shift the output connections of the oscillator to the input of the i-f system, i. e., between the first detector (RCA-6A8) control grid and ground through a 0.25 mfd. capacitor. Regulate its output so that the amplitude of the oscillographic image is approximately the same as used above for adjustment (g) of the second i-f transformer.

11	as follows;	as for SA-37

(a) Calibrate the receiver dial scale by rotating the tuning control until the variable condenser is in full mesh. The slotted screw-head on the top of the control box should then be turned until the dial scale rests exactly on the last graduation at the low-frequency end.

Note	MODEL SA-37	MODEL DB-37
12	as follows;	as for SA-37

(b) Attach the output of the test oscillator to the receiver input, i. e., between the antenna-ground cable, with a 300 mmfd. capacitor in series with antenna lead. If the antenna lead-in is used, the value of this capacitor should be 210 mmfd. Accurately tune the oscillator to 1,400 kc. The oscillograph should be left connected to the second detector output circuit as for the above i-f adjustments. Return the synchronizing switch to its "Int." position and turn the range switch to its No. 1 position.

13	as follows;	as for CB-6

(c) Tune the receiver to a dial reading of 1,400 kc. Adjust trimmers C-14, C-9, and C-5 of the oscillator, detector, and antenna coils so that each causes maximum vertical deflection (amplitude) of the images. The output of the oscillator should be regulated so that the waves on the oscillograph screen are of a convenient observable size. Adjustment of the synchronizing and frequency controls on the oscillograph will cause the waves to remain motionless on the screen.

14	C14, C9,& C5	as for CB-6
15	C12	"
16	C14, C9,& C5	"
17	of C12	"
18	as follows;	as for SA-37

and adjusting the scale by means of the slotted screw-head on the top of the control head.

20	as for CB-6	through a 0.25 mfd. capicator.

Radiotron Socket Voltages (MODEL CB-6 ONLY)

Operating conditions of the basic circuits of this instrument may be determined by measuring the voltages applied to the tube elements. Figure 6 shows the voltage values from the socket contacts to ground and appearing across the heater contacts (H-H). Each value as specified should hold within ± 20% when this instrument is normally operative, with all tubes intact and rated voltage applied. Variations in excess of this limit will usually be indicative of trouble.

The voltages given on this diagram are actual measured voltages, and are obtained with the voltmeter load in the circuit.

To fulfill the conditions under which the d-c voltages were measured requires a 1,000-ohm-per-volt d-c voltmeter having ranges of 10, 50, 250, and 500 volts. Voltages below 10 volts should be measured on the 10-volt scale; between 10 and 50 on the 50-volt scale; between 50 and 250 on the 250-volt scale; and above 250 on the 500-volt scale.

For meters of the 1,000-ohm-per-volt type, but ranges other than above, use the nearest ranges to those specified. If the range is higher the voltage may be higher, if the range is lower the voltage may be lower; either condition depending on the percentage of circuit current drawn by the meter.

©John F. Rider, Publisher

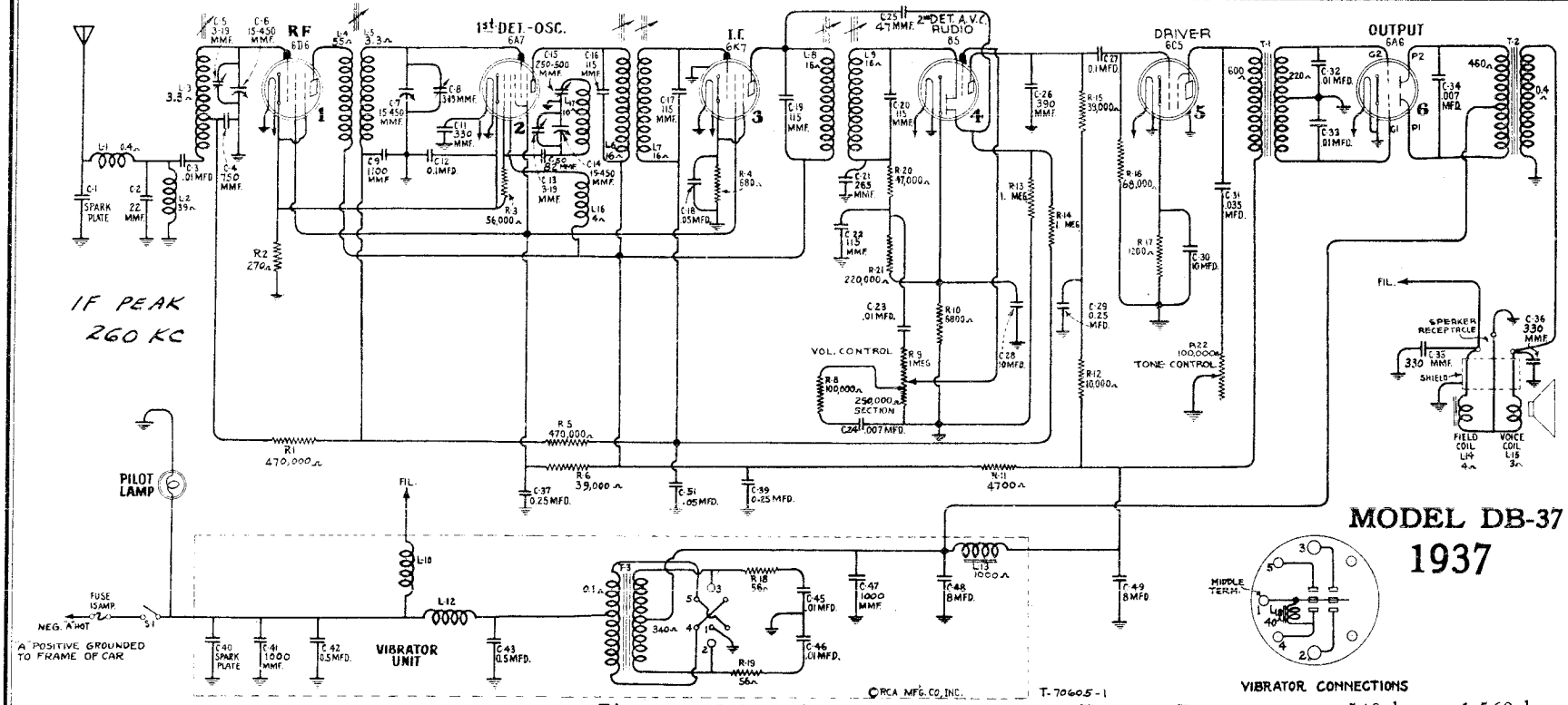

Figure 2—Schematic Circuit Diagram

MODEL DB-37
1937

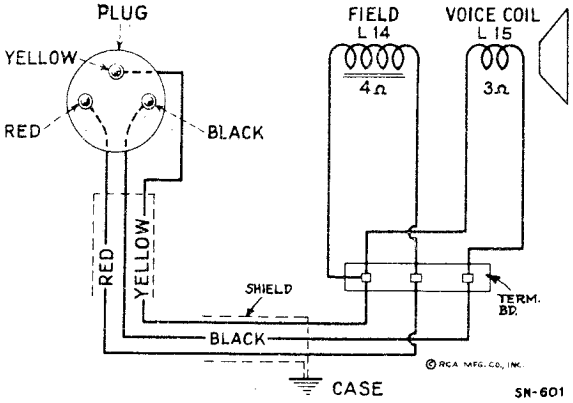

Figure 4—Loudspeaker Schematic and Wiring

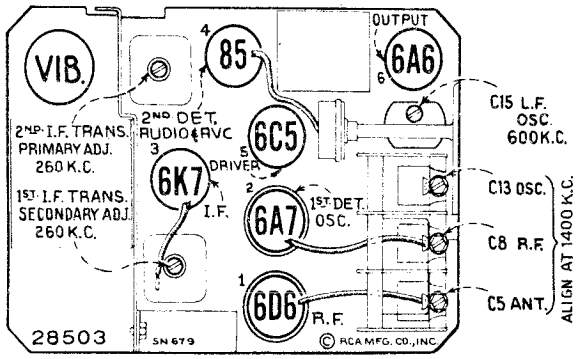

Figure 1—Radiotron Locations

FOR ALIGNMENT, SEE INDEX

TUNING RANGE ..... 540 kc. to 1,560 kc.

OUTPUT RATING

Maximum	9.0 Watts
Undistorted	6.0 Watts

POWER RATING

Supply Voltage	6.3 Volts (Storage Battery)
Current Drain	7.6 Amperes at 6.3 Volts
Fuse Protection	15 Amperes

PILOT LAMP ..... Mazda No. 51, 7.5 Volts

ALIGNMENT FREQUENCIES

I-F Transformers	260 kc.
Oscillator Coil	600 kc. and 1,400 kc.
Detector Coil	1,400 kc.
Antenna Coil	1,400 kc.

LOUDSPEAKER

Type	Electrodynamic
Impedance (v.c.)	3.0 ohms at 400 cycles

MODEL DB-37
Chassis Wiring

HUDSON MOTOR CAR CO.

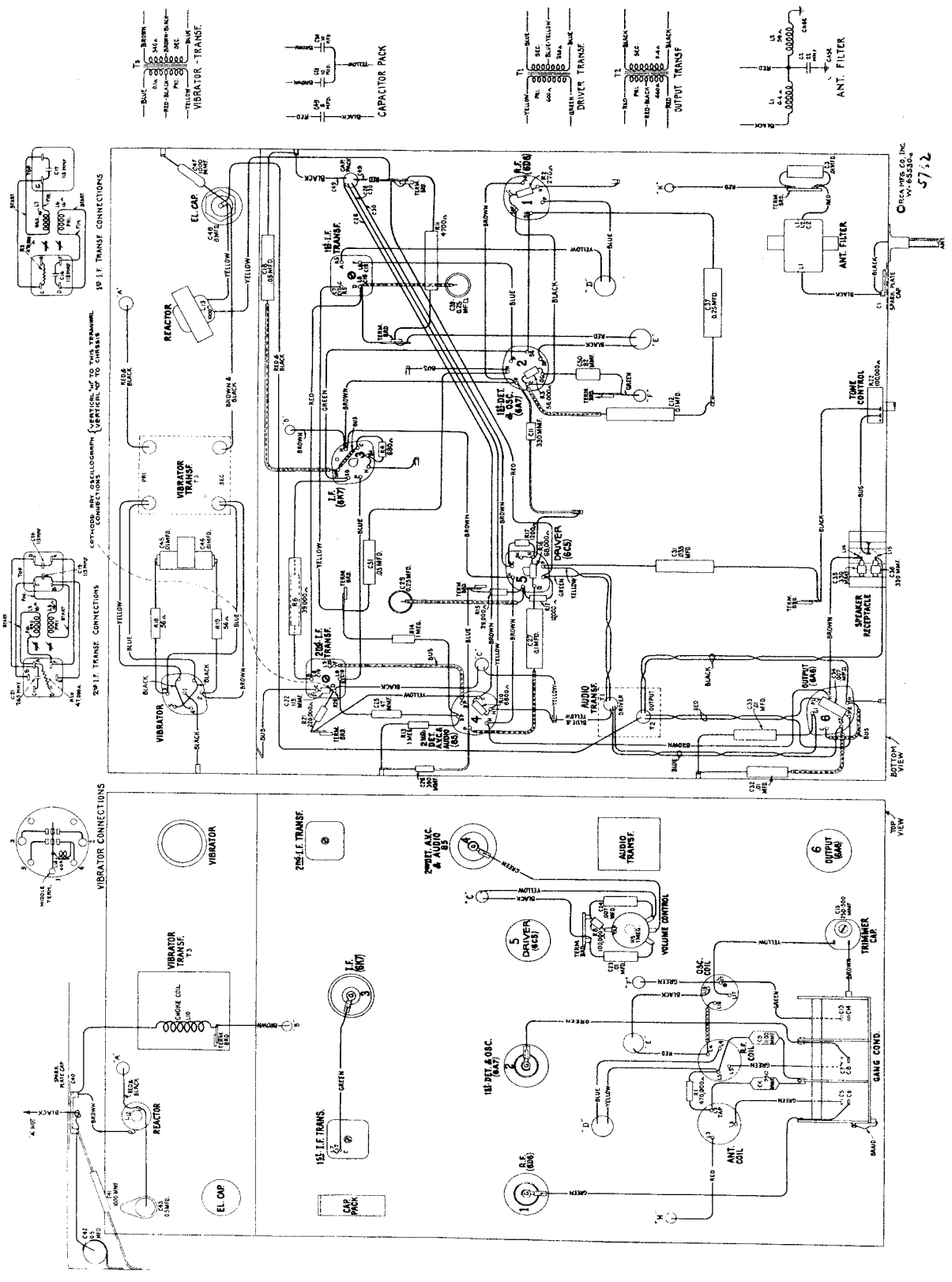

Figure 3—Chassis Wiring Diagram

©John F. Rider, Publisher

©John F. Rider, Publisher

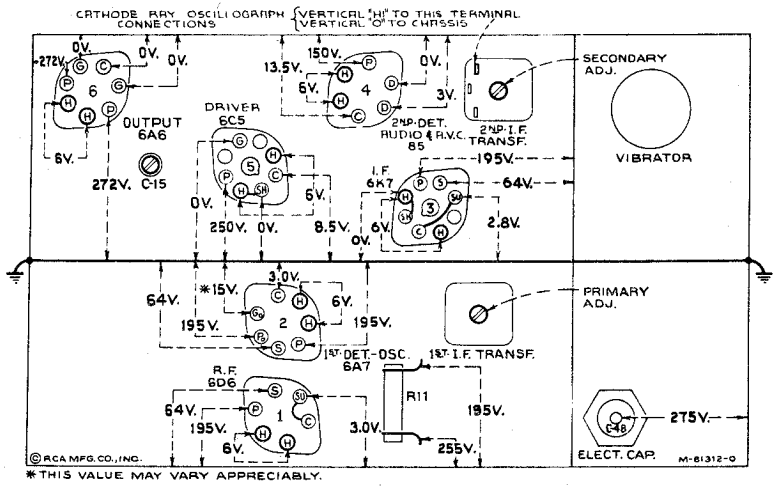

Figure 6—Radiotron Socket Voltages to Chassis

(Measured at 6.3 volts battery supply—Volume Control Minimum—No Signal)

Radiotron Socket Voltages

Operating conditions of the basic circuits of this instrument may be determined by measuring the voltages applied to the tube elements. Figure 6 shows the voltage values from the socket contacts to ground and appearing across the heater contacts (H-H). Each value as specified should hold within ± 20% when this instrument is normally operative, with all tubes intact and rated voltage applied. Variations in excess of this limit will usually be indicative of trouble.

The voltages given on this diagram are actual measured voltages, and are obtained with the voltmeter load in the circuit.

To fulfill the conditions under which the d-c voltages were measured requires a 1,000-ohm-per-volt d-c voltmeter having ranges of 10, 50, 250, and 500 volts. Voltages below 10 volts should be measured on the 10-volt scale; between 10 and 50 on the 50-volt scale; between 50 and 250 on the 250-volt scale; and above 250 on the 500-volt scale.

For meters of the 1,000-ohm-per-volt type, but ranges other than above, use the nearest ranges to those specified. If the range is higher the voltage may be higher, if the range is lower the voltage may be lower; either condition depending on the percentage of circuit current drawn by the meter.

Hudson Stock No.	RCA Stock No.	DESCRIPTION
		RECEIVER ASSEMBLIES
BO 153817	12511	Cap—Grid contact cap for metal tubes—Package of 5
BO 153818	12118	Cap—Grid contact cap for glass tubes—Package of 5
BO 153819	13375	Capacitor—Adjustable capacitor (C15)
BO 153820	13141	Capacitor—47 mmfd. (C25)
BO 153821	12813	Capacitor—82 mmfd. (C50)
BO 153822	13433	Capacitor—115 mmfd. (C22)
BO 152067	11998	Capacitor—115 mmfd. (C16, C17, C19, C20)
BO 153823	12761	Capacitor—265 mmfd. (C21)
BO 153824	13432	Capacitor—330 mmfd. (C11, C35, C36)
BO 153825	12764	Capacitor—390 mmfd. (C26)
BO 153826	13429	Capacitor—750 mmfd. (C4)
BO 153827	12762	Capacitor—1,000 mmfd. (C41)
BO 153828	13430	Capacitor—1,100 mmfd. (C9)
BO 151320	5148	Capacitor—.007 mfd. (C24, C34)
BO 152072	4858	Capacitor—.01 mfd. (C3, C23, C32, C33)
BO 151324	5196	Capacitor—.035 mfd. (C31)
BO 152073	4836	Capacitor—.05 mfd. (C18, C51)
BO 151326	4841	Capacitor—.1 mfd. (C12)
BO 153829	12484	Capacitor—0.25 mfd. (C37)
BO 152074	12237	Capacitor—0.25 mfd. (C29, C39)
BO 151329	11418	Capacitor—0.5 mfd. (C42)
BO 152075	5019	Capacitor—0.5 mfd. (C43)
BO 152076	12234	Capacitor—8 mfd. (C48)
BO 152077	12233	Capacitor pack—Comprising 2 sections of .01 mfd. (C45, C46)
BO 152078	12238	Capacitor pack—Comprising one 8 mfd. and two 10 mfd. sections (C28, C30, C49)
BO 152079	12235	Coil—Choke coil (L12)
BO 153830	13378	Coil—Antenna coil with shield (L3)
BO 153831	13377	Coil—R. F. coil with shield (L4, L5)
BO 153832	13376	Coil—Oscillator coil, less shield (L16, L17)
BO 153833	13371	Condenser—3 gang variable tuning condenser (C5, C6, C7, C8, C13, C14)
BO 152084	12006	Core—Adjustable core for I. F. Trans. Stock No. 12229 or No. 13419
BO 152085	12289	Coupling—Station selector flexible shaft coupling
BO 152086	12239	Filter—Antenna filter (L1, L2, C2)
BO 153834	13372	Gear—Large gear for tuning condenser—located on condenser shaft
BO 153835	13373	Gear—Worm gear, screw and lock-nut for variable condenser
BO 152089	12242	Guide—Station selector shaft guide
BO 153836	13111	Reactor—Filter reactor—iron core (L13)
BO 152091	5034	Resistor—56 ohm—carbon type—¼ watt (R18, R19)—Package of 5
BO 153837	13454	Resistor—270 ohms—insulated—¼ watt (R2)—Package of 5
BO 152093	12262	Resistor—680 ohms—insulated—¼ watt (R4)—Package of 5
BO 152094	12267	Resistor—1,200 ohms—insulated—¼ watt (R17)—Package of 5
BO 153838	11768	Resistor—4,700 ohms—carbon type 2 watts (R11)
BO 153849	13438	Cover—Control box back cover
BO 153850	13450	Crystal — Station selector dial crystal
BO 153851	13451	Dial—Station selector dial scale
BO 151726	4286	Ferrule—"A" lead connector, fuse connector or lamp socket bushing and ferrule—Package of 10
BO 71406	5023	Fuse—15 amperes—Package of 5
BO 153852	13439	Gear—Gear for dial sprocket
BO 153853	13443	Gear—Intermediate gears and shaft assembly for dial scale
BO 152125	4290	Insulator—Fuse connector insulator —Package of 10
BO 153278	13421	Knob—Tuning or volume control knob—Package of 5
BO 71641	11765	Lamp—Dial lamp—Package of 5
BO 152127	12274	Lead—"A" lead complete with female section of connector—connects control box switch to receiver
BO 153854	13549	Lead—"A" lead and bracket complete with male section of connector — connects control box switch to fuse connector
BO 152128	12276	Lead—"A" lead—complete with female section of fuse connector —less fuse and fuse insulator —connects car A terminal to control box
BO 153855	13551	Nut—Knurled nut—less set screw for dial sprocket adjustment—Package of 5
BO 153856	13446	Retainer—Retainer spring for intermediate shaft and gear assembly—Package of 5
BO 153857	13447	Retainer—Retainer spring for station selector or volume control knob shaft—Package of 5
BO 153858	13422	Roller—Bracket and roller assembly for dial scale—Package of 10
BO 153205	13442	Screw—No. 6-32 x 7/32 inch headless, cone point set screw for tuning or volume control knob—Package of 10
BO 153859	4387	Screw—No. 6-32 x ¼ inch headless set screw for dial sprocket adjustment nut
BO 153860	13444	Shaft — Station selector control shaft complete with worm gear
BO 153861	13546	Shaft — Tuning control flexible shaft complete approximately 16¾ inches long
BO 153862	13547	Shaft — Volume control flexible shaft complete approximately 20¾ inches long
BO 153863	13445	Shaft—Volume control shaft complete with switch operating pin
BO 153864	13550	Socket—Dial lamp socket and lead
BO 151724	4284	Spring—"A" lead connector, fuse connector or lamp socket spring —Package of 10
BO 153204	13553	Spring—Retaining spring for tuning or volume control knob—Package of 10
BO 153865	13449	Spring—Tension spring for bracket and roller assembly—Package of 5
BO 153866	13440	Sprocket—Dial sprocket—less gear
BO 153867	13441	Switch—"On-Off" operating switch
BO 151725	4285	Washer—"A" lead connector, fuse connector or lamp socket insulat-
BO 152096	12265	Resistor—6,800 ohms—insulated—¼ watt (R10)—Package of 5
BO 152097	12288	Resistor—10,000 ohms—insulated—¼ watt (R12)—Package of 5
BO 152098	12266	Resistor—39,000 ohms—insulated—¼ watt (R15)—Package of 5
BO 153839	5176	Resistor—39,000 ohms—carbon type —1 watt (R6)
BO 151352	5132	Resistor—47,000 ohms—carbon type 1/10 watt (R20)—Package of 5
BO 152100	12286	Resistor—56,000 ohms—insulated—¼ watt (R3)—Package of 5
BO 153840	13453	Resistor—68,000 ohms—insulated—¼ watt (R16)—Package of 5
BO 152102	11281	Resistor — 100,000 ohms — carbon type—1/10 watt (R8)—Package of 5
BO 152103	12264	Resistor—220,000 ohms—insulated —¼ watt (R21)—Package of 5
BO 152104	12285	Resistor—470,000 ohms—insulated —¼ watt (R1)—Package of 5
BO 152105	11452	Resistor — 470,000 ohms — carbon type—1/10 watt (R5, R7)—Package of 5
BO 153841	12200	Resistor—1 megohm—insulated—¼ watt (R13, R14)—Package of 5
BO 151360	3584	Ring—Retaining ring for oscillator coil—Package of 5
BO 152107	12290	Shield—6D6 or 6A7 radiotron shield
BO 151363	3623	Shield—Oscillator coil shield
BO 152108	12227	Socket—8 contact 6C5 or 6K7 radiotron socket
BO 152109	4786	Socket—6 contact 6D6 or 85 radiotron socket
BO 152110	4787	Socket—7 contact 6A7 radiotron socket
BO 152111	12241	Socket—6 contact vibrator socket
BO 152112	12243	Socket—7 contact output 6A6 radiotron socket
BO 153842	12007	Spring—Retaining spring for core —Stock No. 12006—Package of 5
BO 152113	12226	Stud—Variable tuning condenser mounting stud assembly
BO 153843	13419	Transformer—First intermediate frequency transformer (L6, L7, C16, C17, R5)
BO 152115	12229	Transformer—Second intermediate frequency transformer (L8, L9, C19, C20, C21, R20)
BO 152116	12230	Transformer—Audio transformer pack comprising driver and output transformer (T1, T2)
BO 152117	12231	Transformer — Vibrator power transformer (T3)
BO 152118	12236	Vibrator—Complete (L18)
BO 152119	12240	Volume control (R9)
		MISCELLANEOUS ASSEMBLIES
BO 152136	4287	Body—Antenna connector body—Package of 10
BO 152137	12253	Bolt—5/16—18 x ¾ inches hex head bolt with lockwasher for receiver mounting—Package of 10
BO 152138	4288	Cap—Antenna or "A" lead connector cap—Package of 10
BO 151402	11447	Capacitor—0.25 mfd.—gas gauge capacitor
BO 152021	12256	Capacitor—0.25 mfd.—temperature gauge capacitor
BO 152022	12255	Capacitor—0.5 mfd.—generator capacitor
BO 153869	13381	Cover—Receiver housing top cover with escutcheon assembled
BO 153870	13383	Cover—Receiver housing bottom cover

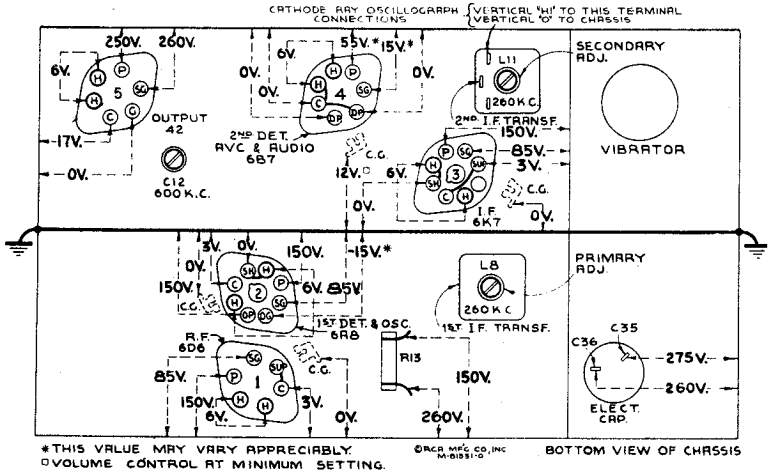

Figure 6—Radiotron Socket Voltages to Chassis

(Measured at 6.3 volts battery supply—Volume Control Minimum—No Signal)

Radiotron Socket Voltages

Operating conditions of the basic circuits of this instrument may be determined by measuring the voltages applied to the tube elements. Figure 6 shows the voltage values from the socket contacts to ground and appearing across the heater contacts (H-H). Each value as specified should hold within ± 20% when this instrument is normally operative, with all tubes intact and rated voltage applied. Variations in excess of this limit will usually be indicative of trouble.

The voltages given on this diagram are actual measured voltages, and are obtained with the voltmeter load in the circuit.

To fulfill the conditions under which the d-c voltages were measured requires a 1,000-ohm-per-volt d-c voltmeter having ranges of 10, 50, 250, and 500 volts. Voltages below 10 volts should be measured on the 10-volt scale; between 10 and 50 on the 50-volt scale; between 50 and 250 on the 250-volt scale; and above 250 on the 500-volt scale.

For meters of the 1,000-ohm-per-volt type, but ranges other than above, use the nearest ranges to those specified. If the range is higher the voltage may be higher, if the range is lower the voltage may be lower; either condition depending on the percentage of circuit current drawn by the meter.

Hudson Stock No.	RCA Stock No.	DESCRIPTION
		RECEIVER ASSEMBLIES
BO 153817	12511	Cap—Grid contact cap for metal tubes—Package of 5
BO 153818	12118	Cap—Grid contact cap for glass tubes—Package of 5
BO 153819	13375	Capacitor—Adjustable capacitor (C12)
BO 153822	13433	Capacitor—115 mmfd. (C23)
BO 152067	11998	Capacitor—115 mmfd. (C15, C16, C20, C21)
BO 153824	13432	Capacitor—330 mmfd. (C10)
BO 153825	12764	Capacitor—390 mmfd. (C25)
BO 153826	13429	Capacitor—750 mmfd. (C4)
BO 153827	12762	Capacitor—1,000 mmfd. (C29)
BO 153899	13434	Capacitor—1,000 mmfd. (C34)
BO 153828	13430	Capacitor—1,100 mmfd. (C7)
BO 153900	4838	Capacitor—.005 mfd. (C27)
BO 152072	4858	Capacitor—.01 mfd. (C3, C18, C26)
BO 153901	4839	Capacitor—.1 mfd. (C24)
BO 153829	12484	Capacitor—0.25 mfd. (C17, C19)
BO 153902	4840	Capacitor—0.25 mfd. (C11)
BO 151329	11418	Capacitor—0.5 mfd. (C30)
BO 152075	5019	Capacitor—0.5 mfd. (C31)
BO 152077	12233	Capacitor pack—Comprising 2 sections of .01 mfd. each (C32, C33)
BO 153903	13114	Capacitor pack—Comprising 2 sections of 8 mfd. each (C35, C36)
BO 152079	12235	Coil—Choke coil (L14)
BO 153830	13378	Coil—Antenna coil with shield (L3)
BO 153904	13418	Coil—R. F. coil less shield (L4, L5)
BO 153832	13376	Coil—Oscillator coil less shield (L6, L7)
BO 153833	13371	Condenser—3-gang variable tuning condenser (C5, C6, C8, C9, C13, C14)
BO 152084	12006	Core—Adjustable core for I. F. Trans. Stock No. 12229 or No. 13419
BO 152085	12289	Coupling—Station selector flexible shaft coupling
BO 152086	12239	Filter—Antenna filter (L1, L2, C2)
BO 153834	13372	Gear—Large gear for tuning condenser—located on condenser shaft
BO 153835	13373	Gear—Worm gear, screw and locknut for variable condenser
BO 152089	12242	Guide—Station selector shaft guide
BO 153905	12485	Pin—Contact pin for speaker leads—Package of 5
BO 152090	12232	Reactor—Filter reactor—iron core (L13)
BO 152091	5034	Resistor—56 ohms—carbon type—½ watt (R14, R15)—Package of 5
BO 153907	13428	Resistor—150 ohms—insulated—¼ watt (R2)—Package of 5
BO 153908	11845	Resistor—560 ohms—carbon type—1 watt (R12)—Package of 5
BO 152095	8097	Resistor—5,600 ohms—carbon type—2 watts (R13)
BO 153909	3066	Resistor—12,000 ohms—carbon type—1 watt (R5)—Package of 5
BO 151352	5132	Resistor—47,000 ohms—carbon type—1/10 watt (R6)—Package of 5
BO 152100	12286	Resistor—56,000 ohms—insulated—¼ watt (R3)—Package of 5
BO 152127	12274	Lead—"A" lead complete with female section of connector—connects control box switch to receiver
BO 153854	13549	Lead—"A" lead and bracket complete with male section of connector—connects control box switch to fuse connector
BO 152128	12276	Lead—"A" lead complete with female section of fuse connector—less fuse and fuse insulator—connects car "A" terminal to control box
BO 153855	13551	Nut—Knurled—less set-screw for dial sprocket adjustment—Package of 5
BO 153856	13446	Retainer—Retainer spring for intermediate shaft and gear assembly—Package of 5
BO 153857	13447	Retainer—Retainer spring for station selector or volume control knob shaft—Package of 5
BO 153858	13442	Roller—Bracket and roller assembly for dial scale
BO 153205	13422	Screw—No. 6-32 x 7/32" headless, cone point set-screw for tuning or volume control knob—Package of 10
BO 153859	4387	Screw—No. 6-32 x ¼" headless set-screw for dial sprocket adjustment nut—Package of 10
BO 153860	13444	Shaft—Station selector control shaft complete with worm gear
BO 153861	13546	Shaft—Tuning control flexible shaft complete, approximately 16¾" long
BO 153862	13547	Shaft—Volume control flexible shaft complete, approximately 20¾" long
BO 153863	13445	Shaft—Volume control shaft complete with switch operating pin
BO 153864	13550	Socket—Dial lamp socket and lead
BO 151724	4284	Spring—"A" lead connector, fuse connector or lamp socket spring—Package of 10
BO 153204	13553	Spring—Retaining spring for tuning or volume control knob—Package of 10
BO 153865	13449	Spring—Tension spring for bracket and roller assembly—Package of 5
BO 153866	13440	Sprocket—Dial sprocket—less gear
BO 153867	13441	Switch—"On-Off" operating switch
BO 152103	12264	Resistor—220,000 ohms—insulated—¼ watt (R10)—Package of 5
BO 153910	12452	Resistor—330,000 ohms—insulated—½ watt (R11)—Package of 5
BO 152104	12285	Resistor—470,000 ohms—insulated—¼ watt (R1)—Package of 5
BO 152105	11452	Resistor—470,000 ohms—carbon type—1/10 watt (R4, R7)—Package of 5
BO 152841	12200	Resistor—1 megohm—insulated—¼ watt (R9)—Package of 5
BO 152106	12287	Resistor—1.5 megohms—insulated—¼ watt (R7)—Package of 5
BO 151360	3584	Ring—Retaining ring for R. F. or oscillator coil—Package of 5
BO 152107	12290	Shield—Radiotron shield
BO 151363	3623	Shield—R. F. or oscillator coil shield
BO 152108	12227	Socket—8-contact 6A8 or 6K7 Radiotron socket
BO 152109	4786	Socket—6-contact 6D6 or 42 Radiotron socket
BO 152110	4787	Socket—7-contact 6B7 Radiotron socket
BO 152111	12241	Socket—6-contact vibrator socket
BO 153842	12007	Spring—Retaining spring for core, Stock No. 12006—Package of 5
BO 152113	12226	Stud—Variable tuning condenser mounting stud assembly
BO 153843	13419	Transformer—First intermediate frequency transformer (L8, L9, C15, C16, R4)
BO 152115	12229	Transformer—Second intermediate frequency transformer (L10, L11, C20, C21, C22, R6)
BO 153911	12364	Transformer—Output transformer (T2)
BO 152117	12231	Transformer—Vibrator power transformer (T1)
BO 152118	12236	Vibrator—Complete (L17)
BO 153912	13420	Volume control (R8)
		CONTROL HEAD AND FLEXIBLE SHAFT ASSEMBLIES
BO 153844	13548	Body—"A" lead connector body—female section—Package of 10
BO 153845	13437	Body—Control box body
BO 152135	12291	Body—Fuse connector body—female section—Package of 10
BO 153292	13436	Box—Control box complete—less cables, flexible shafts and knobs
BO 153293	13379	Bushing—⅜—24-19/32 threaded bushing to mount control head—Package of 2
BO 153849	13438	Cover—Control box back cover
BO 153850	13450	Crystal—Station selector dial crystal
BO 153851	13451	Dial—Station selector dial scale
BO 151726	4286	Ferrule—"A" lead connector, fuse connector or lamp socket bushing and ferrule—Package of 10
BO 71406	5023	Fuse—15 amperes—Package of 5
BO 153852	13439	Gear—Gear for dial sprocket
BO 153853	13443	Gear—Intermediate gears and shaft assembly for dial scale
BO 152125	4290	Insulator—Fuse connector insulator—Package of 10
BO 153278	13421	Knob—Tuning or volume control knob—Package of 5
BO 71641	11765	Lamp—Dial lamp—Package of 5
BO 151725	4285	Washer—"A" lead connector, fuse connector or lamp socket insulating washer—Package of 10
BO 153868	13552	Washer—Felt washer for dial sprocket shaft—Package of 10
		MISCELLANEOUS ASSEMBLIES
BO 152136	4287	Body—Antenna connector body—Package of 10
BO 152137	12253	Bolt—5/16—18 x ¾" hex. head bolt with lockwasher for receiver mounting—Package of 10
BO 152138	4288	Cap—Antenna or "A" lead connector cap—Package of 10
BO 153913	12665	Capacitor—0.25 mfd.—antenna capacitor
BO 151402	11447	Capacitor—0.25 mfd.—gas gauge capacitor
BO 152021	12256	Capacitor—0.25 mfd.—temperature gauge capacitor
BO 152022	12255	Capacitor—0.5 mfd.—generator capacitor

©John F. Rider, Publisher

HUDSON MOTOR CAR CO.

MODEL SA-37
Schematic, Socket
Trimmers, Specifications

FOR ALIGNMENT, SEE INDEX

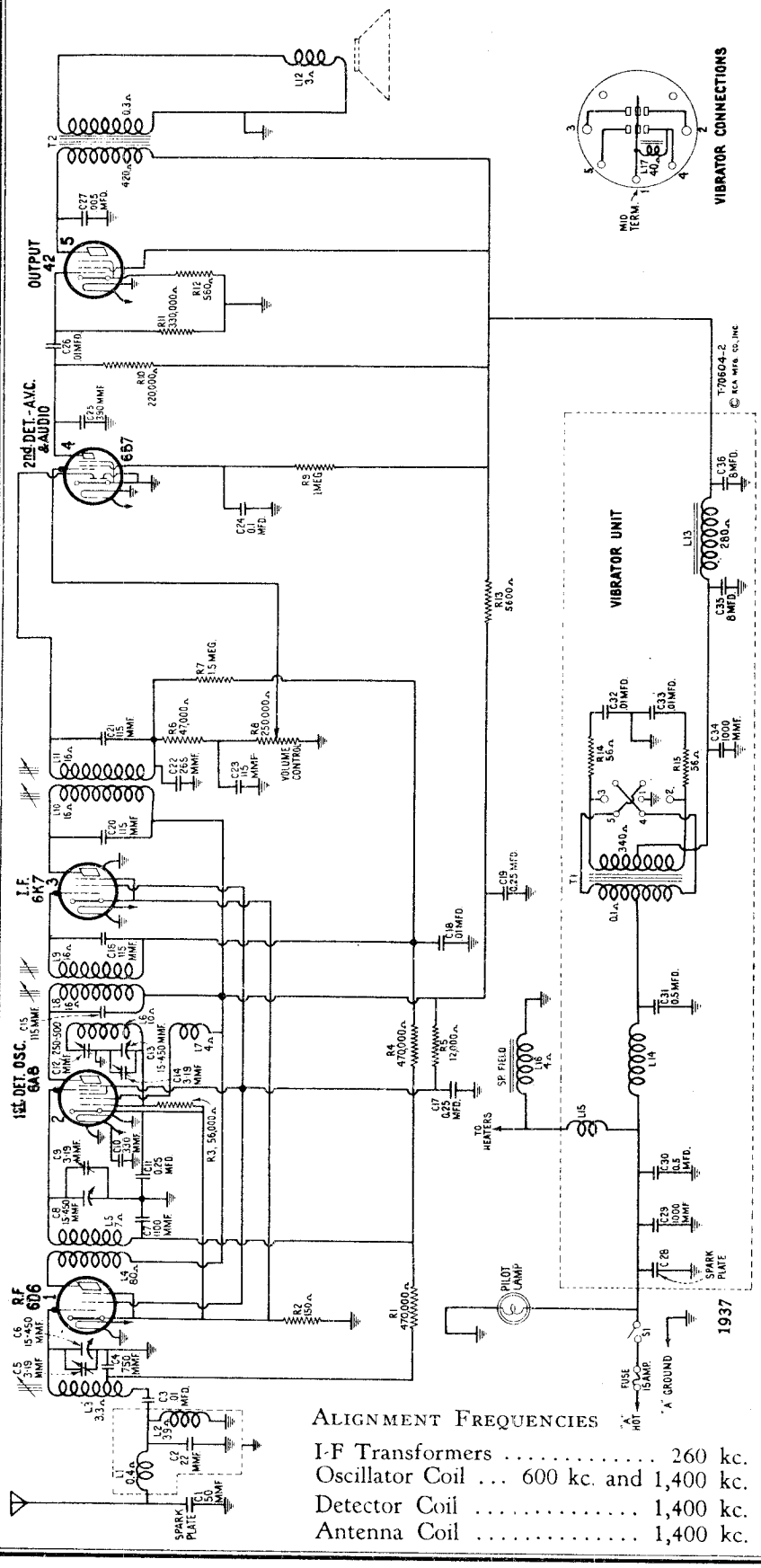

Figure 2—Schematic Circuit Diagram

TUNING RANGE ..... 540 kc. to 1,560 kc.

OUTPUT RATING

Maximum ..... 3.5 Watts
Undistorted ..... 2.25 Watts

POWER RATING

Supply Voltage 6.3 Volts (Storage Battery)
Current Drain .. 6.5 Amperes at 6.3 Volts
Fuse Protection ..... 15 Amperes

PILOT LAMP ... Mazda No. 51, 7.5 Volts

LOUDSPEAKER

Type ..... Electrodynamic
Impedance (v.c.) 3.0 ohms at 400 cycles

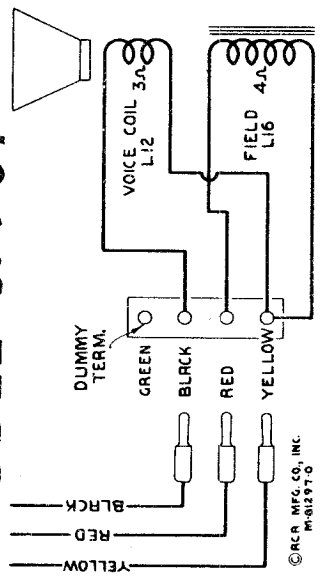

Figure 4—Loudspeaker Schematic and Wiring

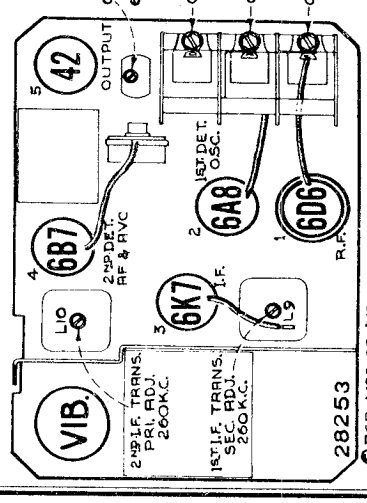

Figure 1—Radiotron Locations

ALIGNMENT FREQUENCIES

I-F Transformers	260 kc.
Oscillator Coil ...	600 kc. and 1,400 kc.
Detector Coil	1,400 kc.
Antenna Coil	1,400 kc.

©John F. Rider, Publisher

MODEL SA-37
Chassis Wiring

HUDSON MOTOR CAR CO.

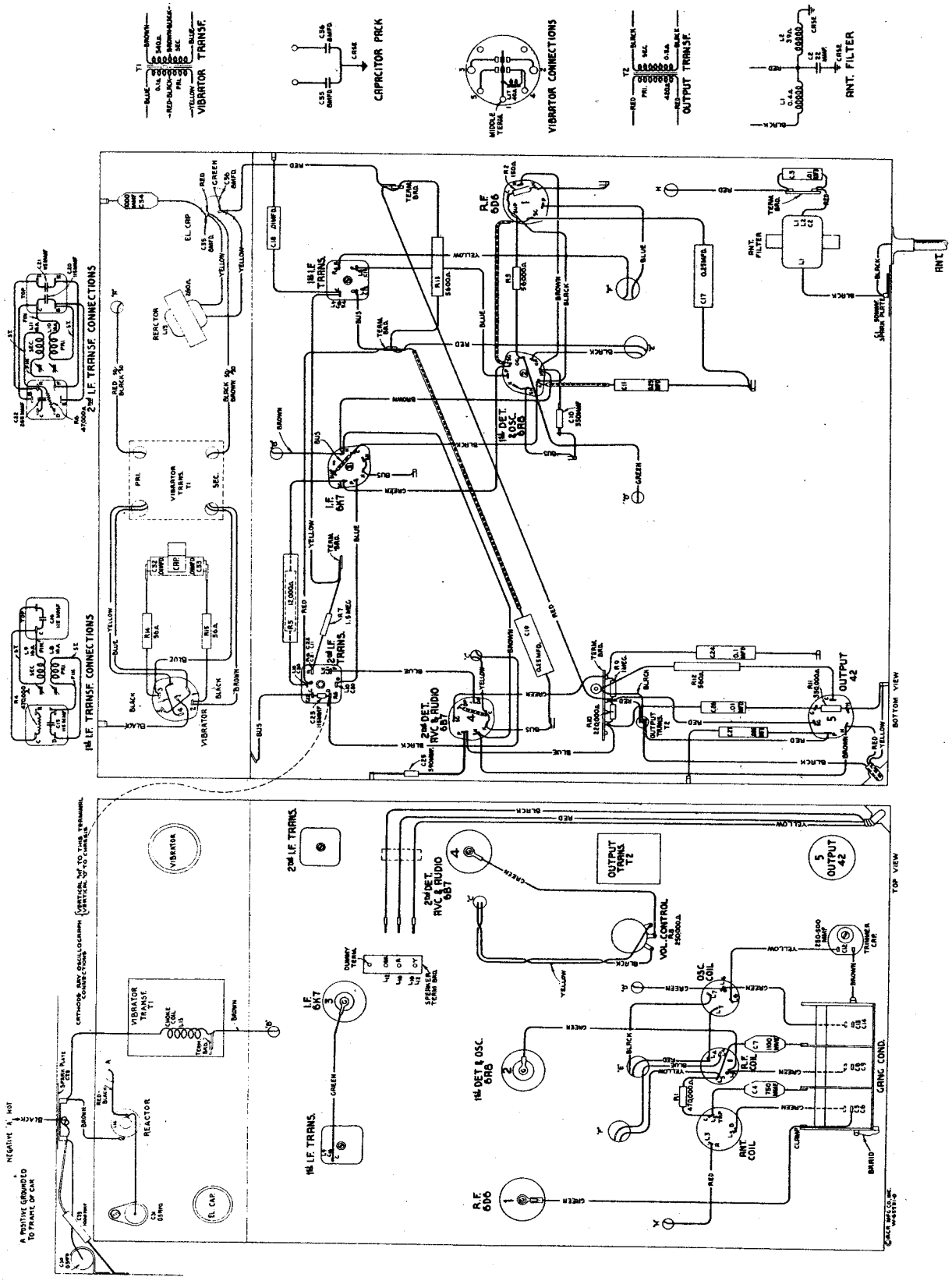

Figure 3—Chassis Wiring Diagram

©John F. Rider, Publisher

INTERNATIONAL RADIO CORP.

MODEL 10
MODELS 25 to 28 incl.
Schematics, Socket
Alignment, Voltage

ALIGNMENT-SAME AS FOR MODEL K-25(below)

MODEL K-10

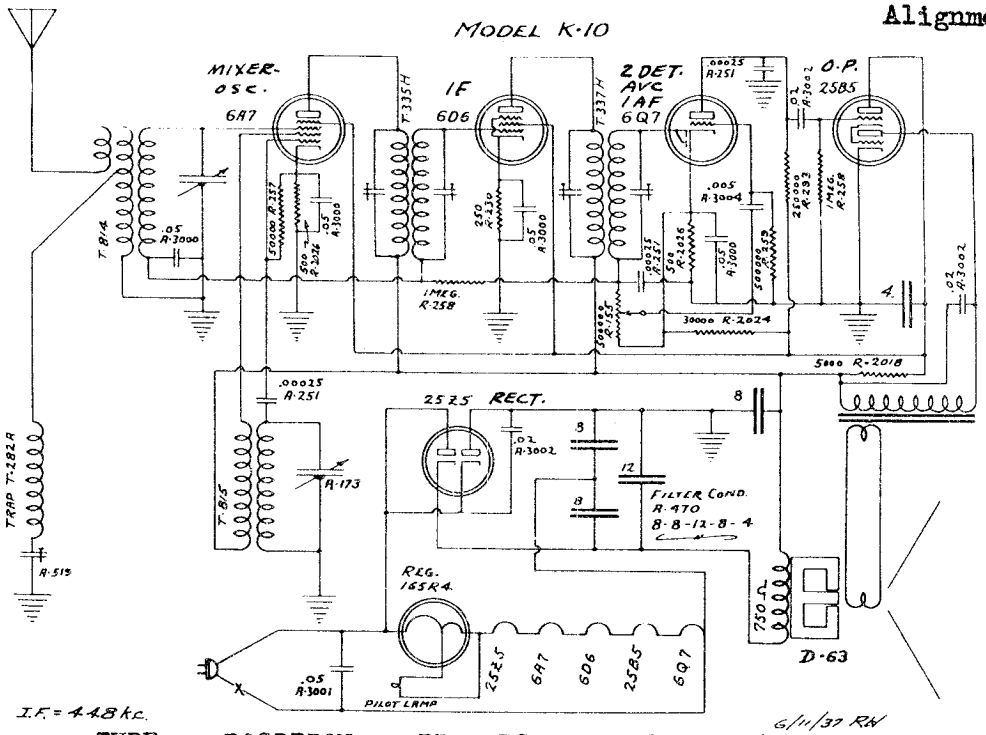

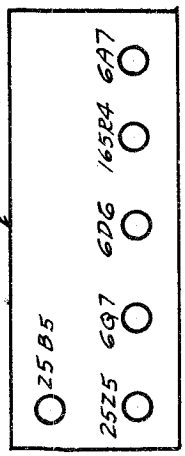

6/11/37 RH

TUBE	POSITION	EK	ESU	EGS	EGA	EP	EP INPUT
6A7	Mixer-Osc.	4		90	150	150	
6D6	I.F.	2.5	2.5	90		150	
6Q7M	2nd Det. AVC-AF	1.3				*-50 THRU 250	
25B5	Output	0				150	90
25Z5	Rectifier	200				118AC	

FOR CONVENTIONAL ALIGNMENT SEE SPECIAL SECTION OF VOLUME VIII

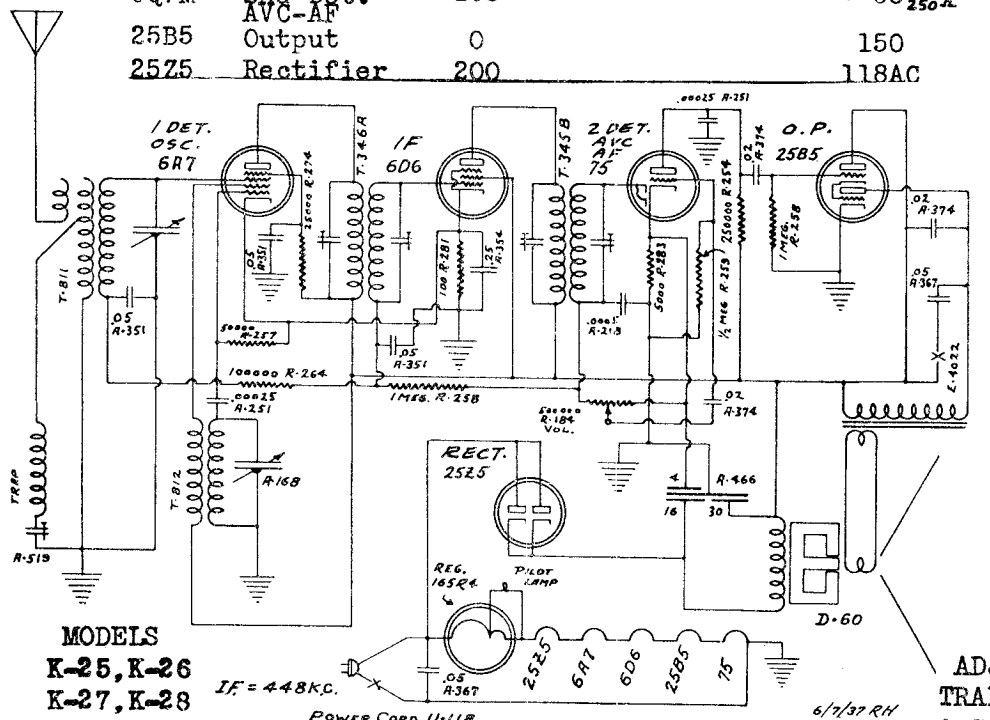

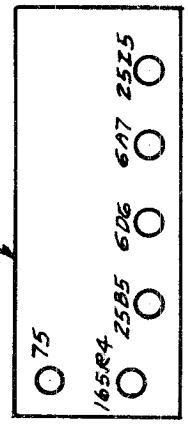

MODELS
K-25, K-26
K-27, K-28

6/7/37 RH

TUBE	POSITION	EK	IGA	ESU	EGS	EP	EP INPUT
6A7	Det.-Osc.	*-1.8	100		60	100	
6D6	I.F.	*-1.8		*-1.8	100	100	
75	2nd Det. A.V.C.-A.F.	*-.6				-40	
25B5	Output	0				90	1--
25Z5	Rectifier	100				118 AC	

ADJUST I.F. AND WAVE TRAP AT 448 KC. ALIGN BROADCAST-BAND TRIMMERS AT 1400 KC. NO PADDER AT 600 KC, bend plates if adjustment is needed.

©John F. Rider, Publisher

MODELS 41,43
MODEL 617
Schematics, Voltage
Socket, Alignment

INTERNATIONAL RADIO CORP.

ALIGN TRIMMERS AT 1500 KC. CHECK AT 1000 KC and at 600 KC--Bend plates if necessary

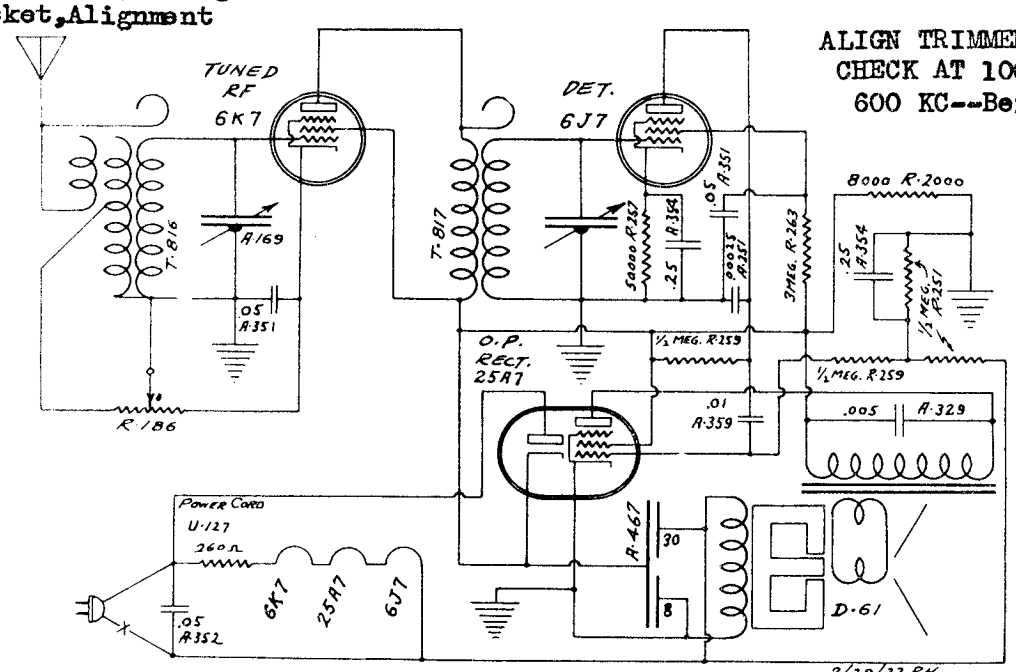

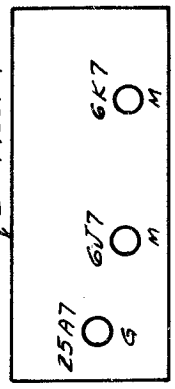

MODELS K-41 & K-43

FOR CONVENTIONAL ALIGNMENT SEE SPECIAL SECTION OF VOL. VIII

TUBE	POSITION	EK	EG	EGS	ESU	EP	EP	EK
6K7	R.F.	*-3 (10V. SCALE)	0	100	*-3	100		
6J7	Det.	*-1.2 (10V SCALE)	0	-10 THRU 3MEG	*-1.2	-20 THRU .5MEG		
25A7g	Output							
	Rectifier	0		100		100	118 AC	100

MODEL 617

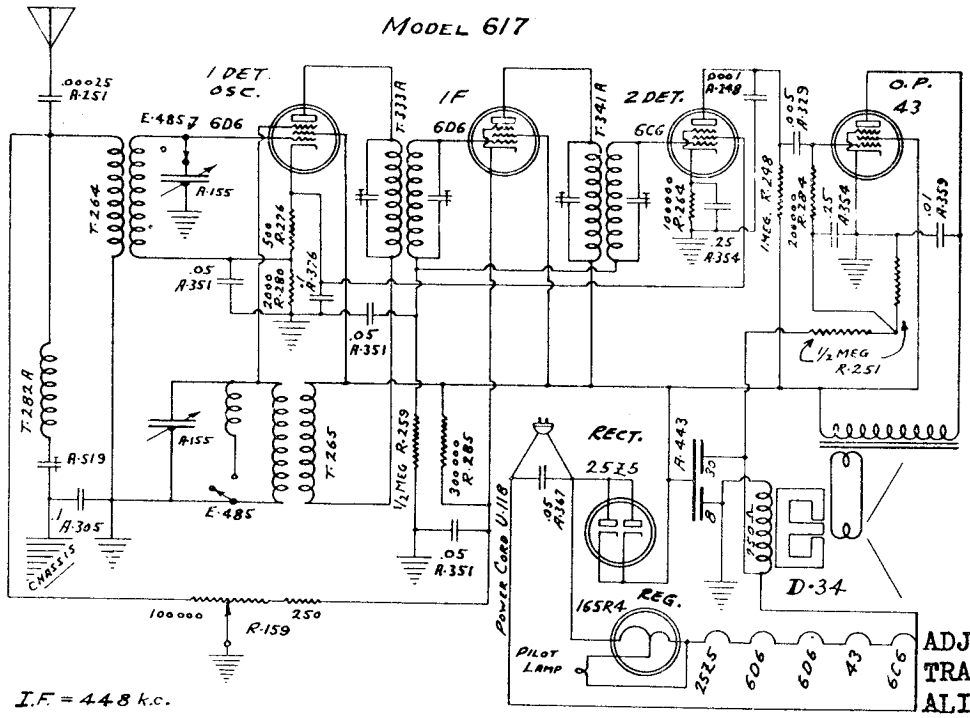

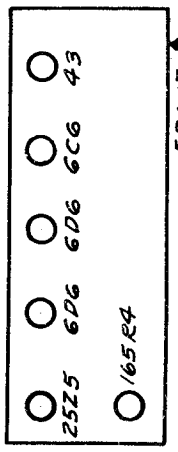

I.F. = 448 k.c.

ADJUST "IF" AND WAVE TRAP AT 448 KC. ALIGN BROADCAST-BAND TRIMMERS AT 1400 KC NO PADDER AT 600 KC, bend plates if requires adjustment.

NO ALIGNMENT NECESSARY ON SHORT-WAVE BAND	TUBE	POSITION	EK	EG3	EG2	EP
	6D6	Det.-Osc.	14	0	100	100
	6D6	I.F.	1	1	100	100
	6C6	2nd Det.	2.5		14	25
	43	Output	0		100	87
	25Z5	Rect.	100			35

©John F. Rider, Publisher

MODEL 735
Schematic

INTERNATIONAL RADIO CORP.

MODEL 630
MODELS 634,635,3734
Schematics,Socket

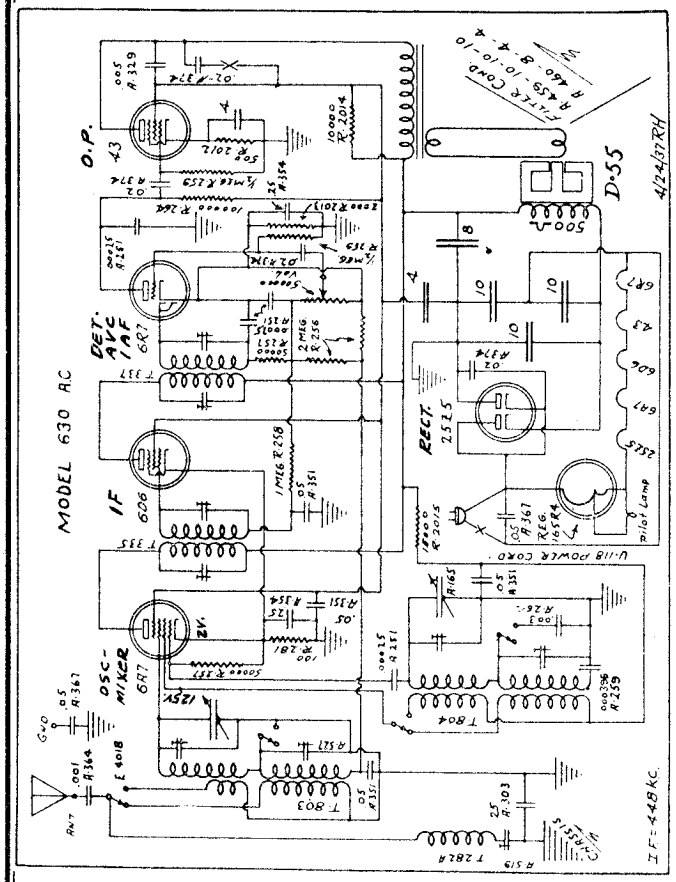

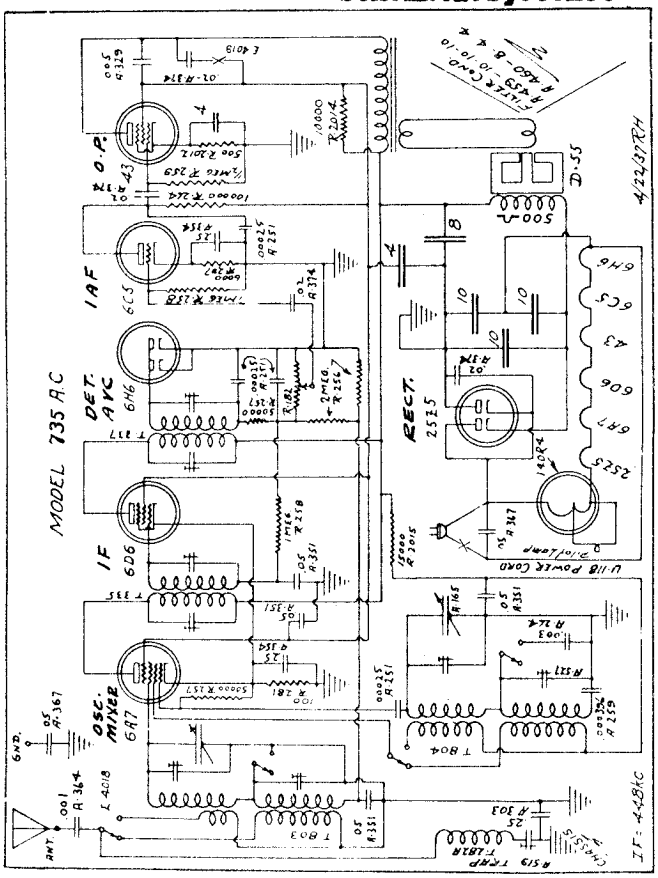

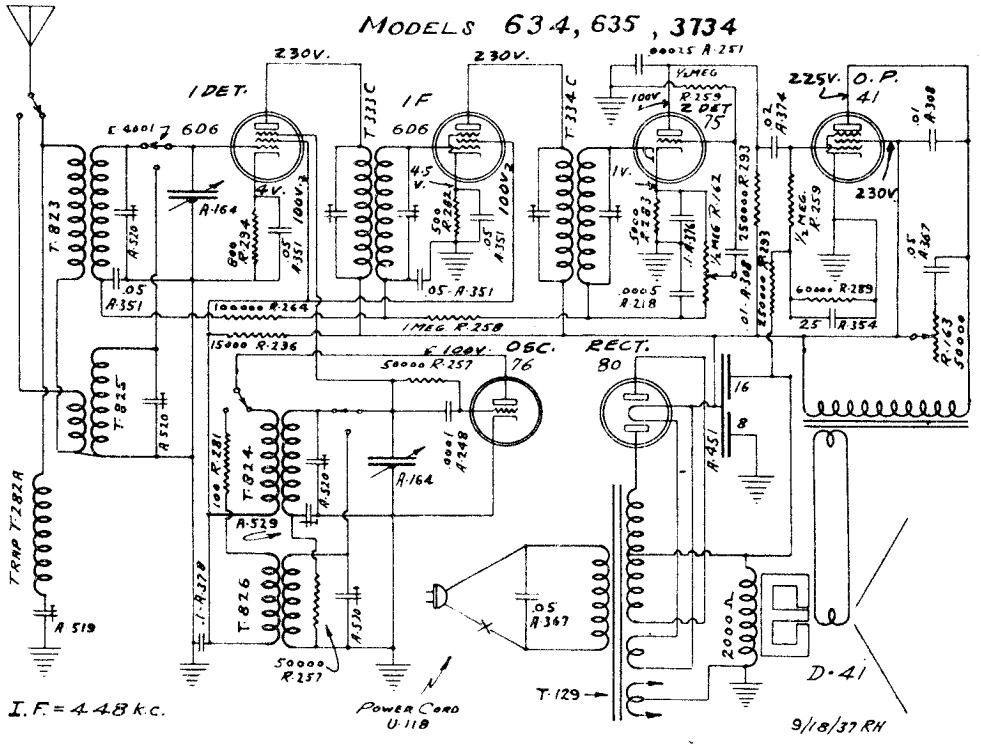

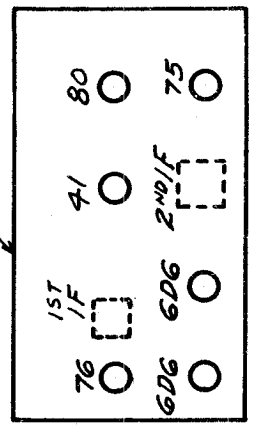

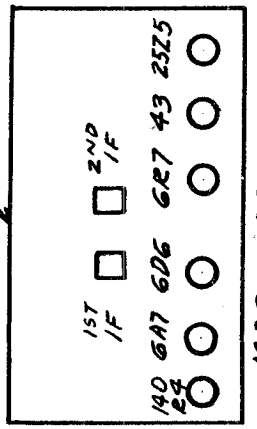

©John F. Rider, Publisher

©John F. Rider, Publisher

KADETTE MODELS K-630 & K-735

These chassis are designed to operate from 110-125 volt, 50-60 cycle alternating current power lines. They are two band receivers covering American broadcast and foreign short wave bands. (540-1550 Kc. and 5.3 to 17.5 meg.)

The following tubes are employed:

MODEL 630

6A7 Oscillator-Mixer
6D6 I.F. Amplifier
6R7 2nd Detector-A.V.C., 1st A.F. (Metal)
43 Audio output
25Z5 Rectifier
165R4 Ballast

MODEL 735

6A7 Oscillator-Mixer
6D6 I.F. Amplifier
6H6 2nd Detector-A.V.C. (Metal)
6C5 1st Audio
43 Audio output
25Z5 Rectifier
140R4 Ballast

ALIGNMENT

ESSENTIAL DATA: The intermediate frequency employed is 448 Kc. The standard type of output meter should be used to indicate signal strength. It should be connected from the plate of the 43 tube to ground. The short wave trimmers are on the tuning gang and the broadcast are on the two section strip mounted between the volume control and band switch. The short wave band *must* be aligned *first* as the short wave trimmers affect the broadcast alignment.

INTERMEDIATES: To align the I.F. circuits set the signal generator to 448 Kc. and feed its modulated signal direct to the antenna. Turn the band switch to the broadcast position. Adjust the first I.F. transformer trimmers for maximum meter reading. Next repeat the process on the second I.F. transformer. Go over both adjustments at least three or four times for accuracy. If adjustments are not made accurately, selectivity and sensitivity will be poor and I.F. oscillation may result. Finally adjust the trimmer on the tuned wave trap for *minimum* meter reading.

SHORT WAVE: Turn the band switch to the short wave position and the dial to 15 megacycles and feed a weak 15 megacycle signal to the antenna. Adjust the short wave oscillator trimmer for maximum reading. Then, peak the short wave antenna trimmer to this setting. There is no adjustable padder on this band so no further alignment is required.

BROADCAST: Turn the band switch to the broadcast position and the dial to 1400 Kc. and feed a weak 1400 Kc. signal to the antenna. Adjust broadcast oscillator trimmer for maximum reading. Then, peak the broadcast antenna trimmer to this oscillator setting.

There is no adjustable padder condenser in this model so resonance at 1000 and 600 Kc. is accomplished by bending plates on the tuning condenser, if necessary.

AVERAGE SOCKET VOLTAGES

Tube	Position	Ek	Eg	Ega	Egs	Esu	Ep
6A7	Osc.-Mixer	2	0	125	110	—	210
6D6	I.F. Amp.	2	0	—	110	2	210
6R7	Det.-A.V.C. 1st A.F. (Model 630)	1.5	0	—	—	—	†30
6H6	Det. A.V.C. (Model 735)	0	—	—	—	—	A.V.C.
6C5	1st A.F. (Model 735)	3	0	—	—	—	†30
43	Audio Output	12	0	—	110	—	190
25Z5	Rectifier	230	—	—	—	—	A.C.

Line 118 volts. No signal. Measurements made from tube prongs to circuit ground with 1000 ohms per volt instrument.
† Measured through .1 megohm.

KADETTE MODELS K-634, K-635, K-3734

This chassis is designed to operate from 110-125 volt, 60 cycle, alternating current power lines. It is a two band receiver covering the American broadcast and Foreign short wave bands.

The following tubes are employed:

76 —Oscillator
6D6—1st Detector
6D6—I.F. Amplifier
75 —2nd Detector—A.V.C.—A.F.
41 —Pentode Output
80 —Rectifier

ALIGNMENT

The standard type of output meter should be used to indicate signal strength. It should be connected from the plate of the 41 to ground. Tone control should be turned "high." The signal from the signal generator *must be kept at a very low level.*

ESSENTIAL DATA: The intermediate frequency employed is 448 Kc. On both bands the oscillator frequency is 448 kilocycles higher than the signal frequency. Aligning should be done on the following frequencies: Broadcast band, 1400 and 600 Kc.; Short wave band 15 megacycles and 8 megacycles.

The four trimmers on the bottom of the chassis are, reading from the side of the chassis by switch toward the center, Short wave antenna, Broadcast antenna, Short wave oscillator and Broadcast oscillator.

INTERMEDIATES: To align the I.F. circuits, set the signal generator to 448 Kc. and feed its modulated signal direct to the antenna. Adjust the first I.F. transformer trimmers for maximum meter reading. Go over both adjustments at least three or four times for accuracy. Repeat this process on the second I.F. transformer. If adjustments are not made accurately, selectivity will be poor and I.F. oscillation may result. Finally, adjust the trimmer on the tuned wave trap for *minimum* meter reading.

BROADCAST BAND: Place the band change switch on Broadcast position. Turn the dial to 1400 Kc. and feed a *very weak* 1400 Kc. modulated signal from your signal generator to the antenna. Adjust the Broadcast oscillator trimmer for maximum reading. Then peak Broadcast antenna trimmer to this oscillator setting.

Turn dial and signal generator to 600 Kc. and rock the padder into correct adjustment. This is accomplished by very slowly adjusting the padder condenser and at the same time turning the dial slightly back and forth across 600 Kc. until an adjustment is obtained producing maximum output. Go back to 1400 Kc. and readjust the oscillator trimmer slightly if necessary. Then recheck padder at 600 Kc.

SHORT WAVE BAND: Place the band change switch on the Short Wave position. Turn the dial to 15 megacycles and feed a very weak 15 megacycle modulated signal from your signal generator to the antenna. Adjust the S.W. oscillator trimmer for maximum reading on the output meter. This trimmer should not be touched again when checking alignment on other frequencies. Then peak S.W. antenna trimmer to this oscillator setting.

Instead of bending condenser plates at 8 megacycles alignment is accomplished by spreading or crowding turns on the S.W. detector coil. If much crowding or spreading is necessary it is advisable to go back and recheck at 15 megacycles.

AVERAGE SOCKET VOLTAGES

Tube	Position	Ek	Esu_2	Egs_2	Ep
76	Oscillator	0	0	—	100
6D6	Detector	4	—	100	230
6D6	I. F.	4.5	4.5	100	230
75	2nd Det. A.V.C.—A.F.	1	—	—	100
41	Output	0	—	230	225
80	Rectifier	—	—	—	118 AC

Line 118 volts 10% variation allowable. Measurements made from tube prongs to circuit ground and made with 1000 ohms per volt instrument on 250 volt scale.

INTERNATIONAL RADIO CORP.

MODEL 739
MODEL 950
Schematics
Socket

The following tubes are employed:

76—Oscillator
6A7—Mixer
6D6—I.F.
6Q7—Det.—A.V.C.—1st A.F. (Metal)
25B5—Output
25Z5—Rectifier
140R8—Ballast

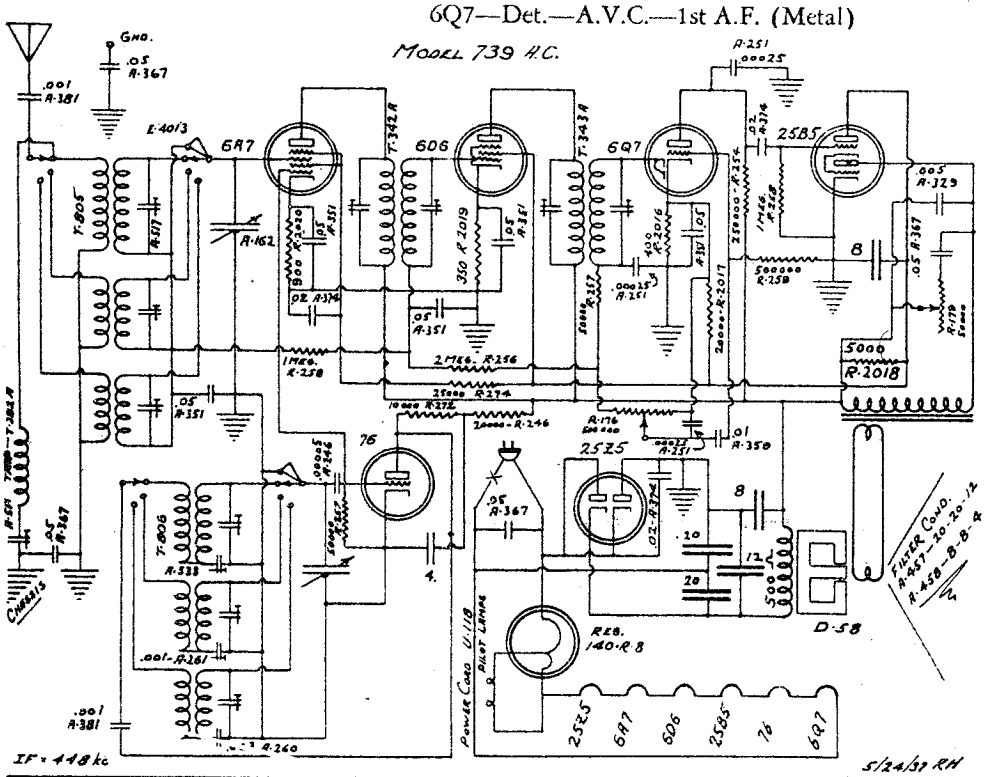

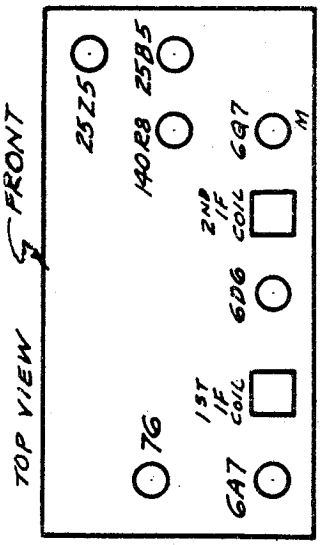

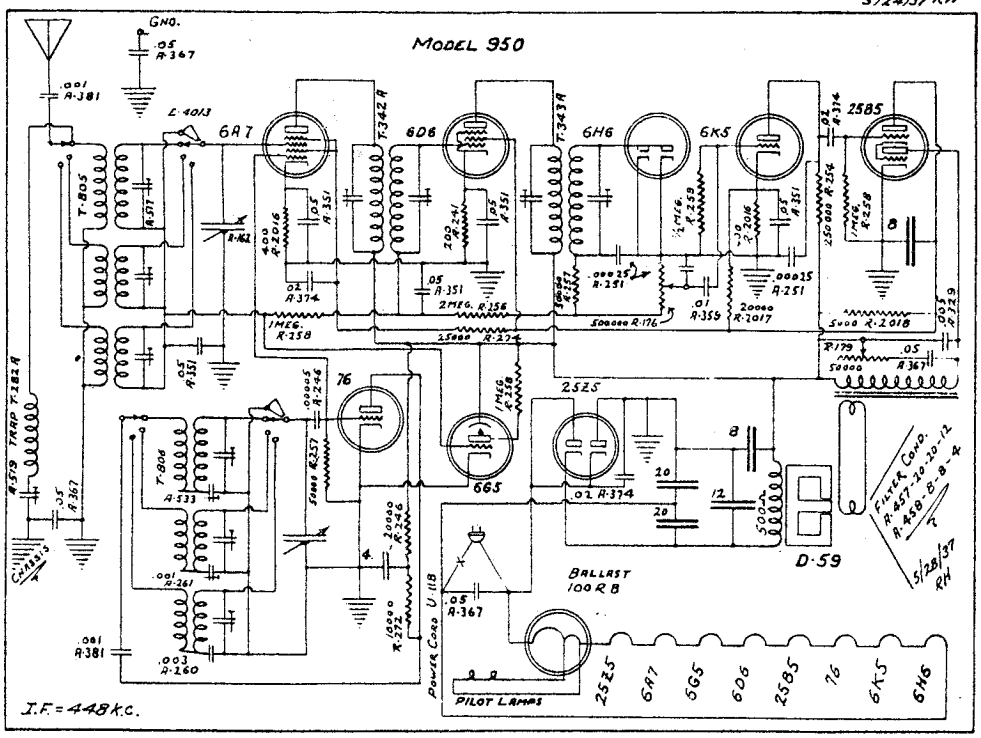

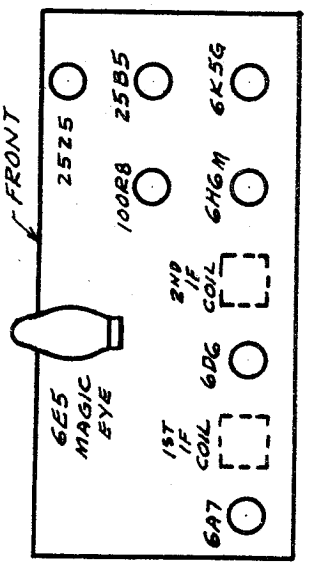

The following tubes are employed:

76 Oscillator
6A7 Mixer
6D6 I.F.
6H6 Det.-A.V.C. (Metal)
6K5 1st A.F.
25B5 Output
6G5 Tuning indicator tube
25Z5 Rectifier
140R8 Ballast

©John F. Rider, Publisher

©John F. Rider, Publisher

MODEL 739
MODEL 950
MODELS 1129, 1149
MODEL 1159
Voltage Alignment

INTERNATIONAL RADIO CORP.

MODELS K-1129, K-1149 & K-1159

ALIGNMENT

ESSENTIAL DATA: The intermediate frequency employed is 448 Kc. The standard type of output meter should be used to indicate signal strength. It should be connected from plate to plate on the 41 tubes.

Poor sensitivity may be an indication of incorrectly adjusted I. F. trimmers. Aligning of Broadcast band should be done on 1400, 1000 and 600 kilocycles.

INTERMEDIATES: To align the I.F. circuits, set the signal generator to 448 Kc. and feed its modulated signal direct to the antenna. Adjust the first I.F. transformer trimmers for maximum meter reading. Go over both adjustments at least three or four times for accuracy. Repeat this process on the second I.F. transformer. If adjustments are not made accurately, selectivity will be poor and I.F. oscillation may result. Finally, adjust the trimmer in the tuned wave trap for *minimum* meter reading.

SHORT WAVE

Turn the dial to 6000 Kc. and feed a *very weak* 6000 Kc. modulated signal from your signal generator to the antenna. Adjust the Short Wave oscillator trimmer for maximum reading. Then peak antenna coupling condenser to this oscillator setting. Do not attempt to align the low frequency end of this band.

BROADCAST

Turn the dial to 1400 Kc. and feed a *very weak* 1400 Kc. modulated signal to the antenna. Adjust Broadcast oscillator trimmer for maximum reading. Then peak Broadcast antenna trimmer to this oscillator setting.

There is no adjustable padder condenser in this model so resonnance on lower frequencies is accomplished by bending plates on tuning condenser.

MODELS K-1129 & K-1149 AVERAGE SOCKET VOLTAGES

Tube	Position	Ek	Eg	Ega	Egs	Esu	Ep
6A7	Osc.-Mixer	*-2.6	0	165	100	—	165
6D6	I.F.	*-2	0	—	100	*-2	165
76	Det.	0	0	—	—	—	0
76	1st Audio	0	‡	—	—	—	†-25
76	Inverter	*-2.3	0	—	—	—	†-25
41	Output	**-12.5	0	—	165	—	160
41	Output	**-12.5	0	—	165	—	160
25Z5	Rectifier	165	—	—	—	—	A.C.

Line 118 volts. 10% variation allowable. Measurements made from tube prong to circuit ground with 1000 ohms per volt instrument on 250 volt scale except * 10 volt scale and **-50 volt scale.
† Through .1 megohm ‡Diode biased.

MODEL K-1159 AVERAGE SOCKET VOLTAGES

Tube	Position	Ek	Eg	Ega	Egs	Esu	Ep
6A7	Osc.-Mixer	*-2.6	0	165	100	—	165
6D6	I.F	*-2	0	—	100	*-2	165
76	Det.	0	0	—	—	—	0
76	1st Audio	0	‡	—	—	—	†-25
76	Inverter	*-2.3	0	—	—	—	†-25
41	Output	**-12.5	0	—	165	—	160
41	Output	**-12.5	0	—	165	—	160
25Z5	Rectifier	165	—	—	—	—	A.C.

MODELS K-739 & K-950

ALIGNMENT

The standard type of output meter should be used as an indicator. It should be connected from the output plate of the 25B5 tube to ground. Tone control should be on "high". The signal from the signal generator must be kept at a very low level.

ESSENTIAL DATA: The intermediate frequency employed is 448 Kc. On all bands the oscillator frequency is 448 Kc. higher than the signal frequency.

The trimmers are in the can containing the associated coils and are available through the holes in the cans. The can in front, next to the dial, contains the oscillator coils and the rear can, the antenna coils. The top trimmers are the broadcast, the middle the mid-band, and the bottom the short wave.

INTERMEDIATES: To align the I.F. circuits, set the signal generator to 448 Kc. and feed its modulated signal direct to the antenna. Turn the band switch on Broadcast position. Adjust the first I.F. transformer trimmers for maximum meter reading. Go over both adjustments at least three or four times for accuracy. Repeat this process on the second I.F. transformer. If adjustments are not made accurately, selectivity will be poor and I.F. oscillation may result. Finally, adjust the trimmer on the tuned wave trap for *minimum meter* reading.

BROADCAST BAND: Place the band change switch on Broadcast position. Turn the dial to 1400 Kc. and feed a *very weak* 1400 Kc. modulated signal from your signal generator to the antenna. Adjust the Broadcast oscillator trimmer for maximum reading. Then peak Broadcast antenna trimmer to this ostillator setting.

Turn dial and signal generator to 600 Kc. and rock the padder into correct adjustment. This is accomplished by very slowly adjusting the padder condenser and at the same time turning the dial slightly back and forth across 600 Kc. until an adjustment is obtained producing maximum output. Go back to 1400 Kc. and readjust the oscillator trimmer slightly if necessary. Then recheck padder at 600 Kc.

MIDDLE BAND: Turn the band change switch to the middle position and tune radio and test oscillator to 5000 Kc. Adjust the oscillator trimmer and then the antenna trimmer for maximum output.

Rock in the padder condenser at 2000 Kc. Then recheck at 5000 Kc. and 2000 Kc.

SHORT WAVE BAND: Turn band change switch to short wave band. Tune radio and test oscillator to 15 megacycles and adjust trimmers. No padder condenser is used on the short wave band so no other adjustments are necessary.

MODEL K-739 AVERAGE SOCKET VOLTAGES

Tube	Position	Ek	Eg	Ega	Egs	Esu	Ep
76	Oscillator	0	0	–	–	–	80
6A7	Mixer	*3	0	50	50	–	190
6D6	I.F.	4	0	–	110	4	190
6Q7	Det-AVC 1st Audio	2	0	–	–	–	†100
25B5	Output	0	0	–	–	–	Input 110 Output 180
25Z5	Rectifier	220	–	–	–	–	118 A.C.

Line 118 volts. 10% variation allowable. Measurements made from tube prong to circuit ground with 1000 ohms per volt instrument on 250 volt scale except * on 10 volt scale
† through .25 megohm.

MODEL K-950 AVERAGE SOCKET VOLTAGES

Tube	Position	Ek	Eg	Ega	Egs	Esu	Ep
76	Oscillator	0	0	—	—	—	80
6A7	Mixer	*3	0	50	50	—	190
6D6	I.F.	4	0	—	110	4	190
6H6	Det.-A.V.C.	0	—	—	—	—	A.V.C
6K5	1st Audio	2	0	—	—	—	†100
25B5	Output	0	0	—	—	—	Input 110 Output 180
6G5	Tun. Indic.	0	A.V.C.	—	—	—	100
25Z5	Rectifier	220	—	—	—	—	118 A.C.

INTERNATIONAL RADIO CORP.

MODELS 1129,1149
MODEL 1159
Schematics,Socket

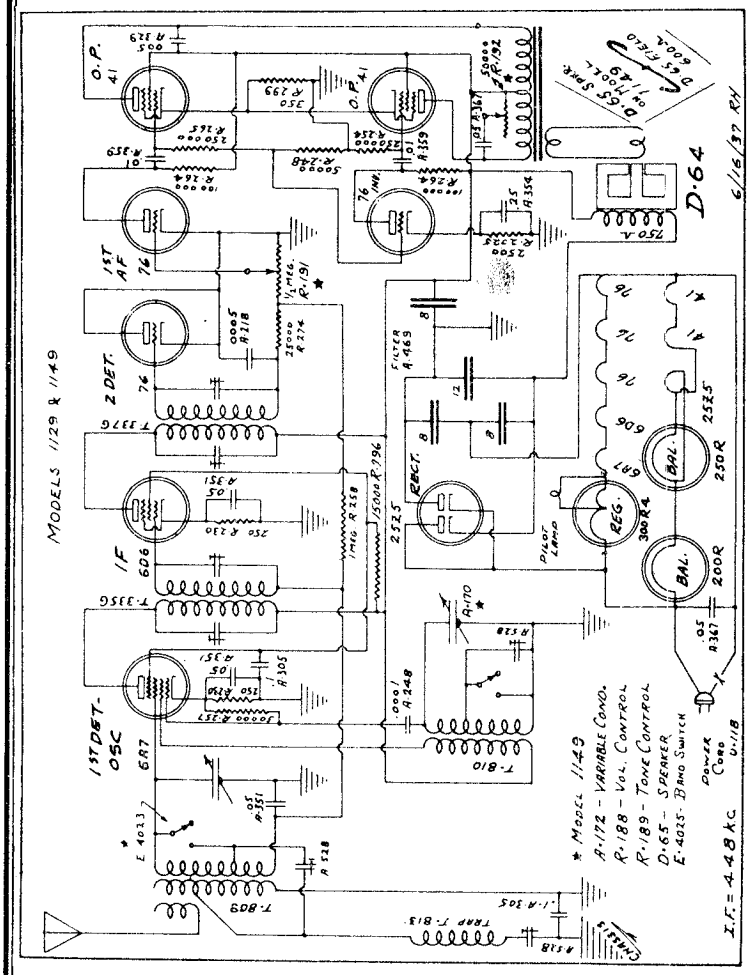

FOR ALIGNMENT AND VOLTAGE, SEE INDEX

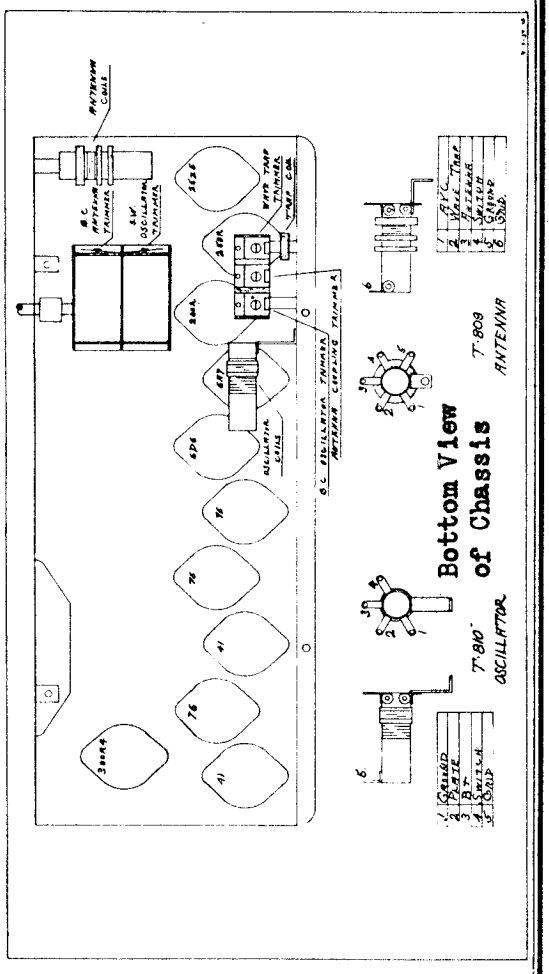

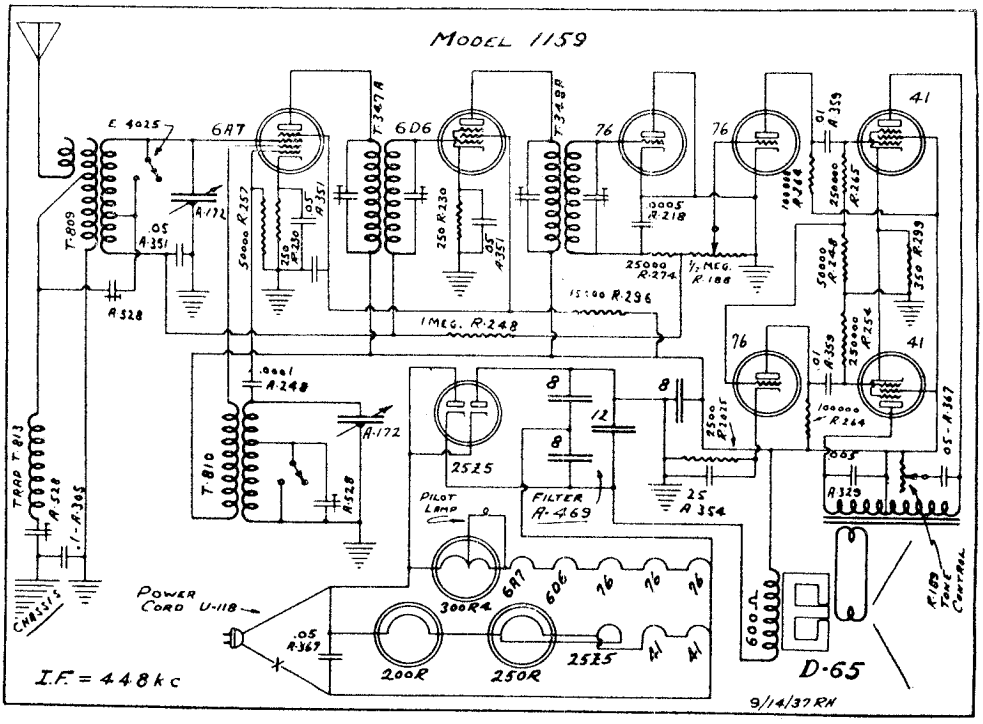

The following tubes are employed:

6A7	—1st Detector-Oscillator	41	—Audio Output
6D6	—I.F. Amplifier	200R	—Ballast tube
76	—2nd Detector	25Z5	—Rectifier
76	—1st Audio	250R	—Ballast tube
76	—Inverter	300R4	—Regulator tube
41	—Audio Output		

©John F. Rider, Publisher

MODEL P
MODEL 210 Converter
Schematics, Notes

INTERNATIONAL RADIO CORP.

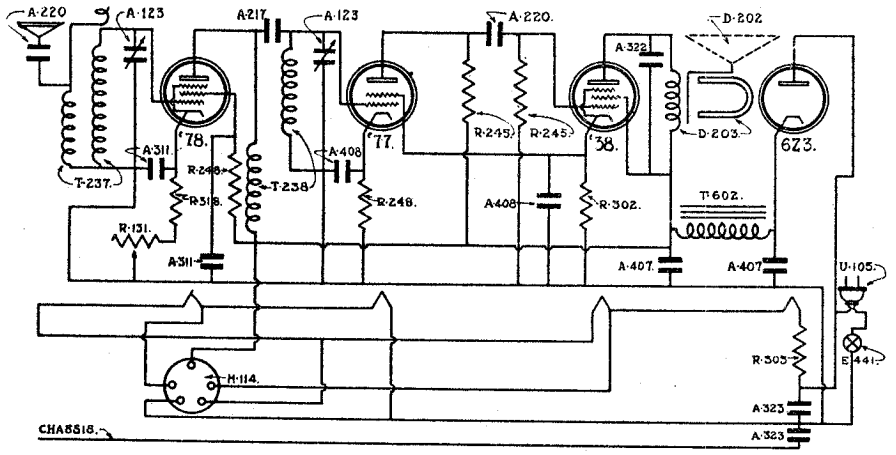

MODEL "P" SYMBOLS FOR SETS BEARING SERIAL NUMBERS 100,001 AND OVER

A-123	2-GANG VARIABLE CONDENSER	$1.75	A-408	DUAL 5 MFD BYPASS CONDENSER	.50
A-217	16 MMFD WIRE WOUND	.10	D-202	SPEAKER CONE	.45
A-220	.002 MFD MICA CONDENSER	.25	D-203	SPEAKER UNIT	1.50
A-311	.01 MFD BYPASS CONDENSER	.15	E-441	POWER SWITCH	.30
A-322	.006 MFD CONDENSER	.15	H-114	AUTO PLUG	.50
A-323	.05 MFD BYPASS CONDENSER	.15	R-131	VOLUME CONTROL	.60
A-407	FILTER CONDENSER	1.00	R-245	2 MEG. CARBON RESISTOR	.20
R-248	50M OHM CARBON RESISTOR	.20			
R-302	1500 OHM WIRE WOUND RESISTOR	.35			
R-303	310 OHM WIRE WOUND RESISTOR	.75			
R-318	150 OHM WIRE WOUND RESISTOR	.25			
T-237	ANTENNA COIL ASSEMBLY	.30			
T-238	R. F. COIL ASSEMBLY	.30			
T-602	FILTER CHOKE	.35			
		.65			

The out-put tube is now a "dome" type 38.

The new rectifier tube is 6Z3 and is inter changeable with the KR-1. The chief difference is that the new tube contains no mercury, and will therefore, be free from internal short circuits which have occurred occasionally in the KR-1 tube due to the condensation of mercury. The use of the new tube permits the elimination of the resistor R-304 in the plate circuit.

MODEL P--later production differs from earlier type as follows--uses types 77, 78 and 6Z3 tubes in place of types 36 and KR-1.

The type 78 is used in the R.F. stage. The screen voltage has been dropped on this tube through a 50M ohm resistor R-248 which is by-passed by an .01 Mfd. condenser A-311. The voltage on the screen is about 55 volts with the volume full on.

The voltages and connections to the detector socket are the same as in the earlier models. The tube is now a 77.

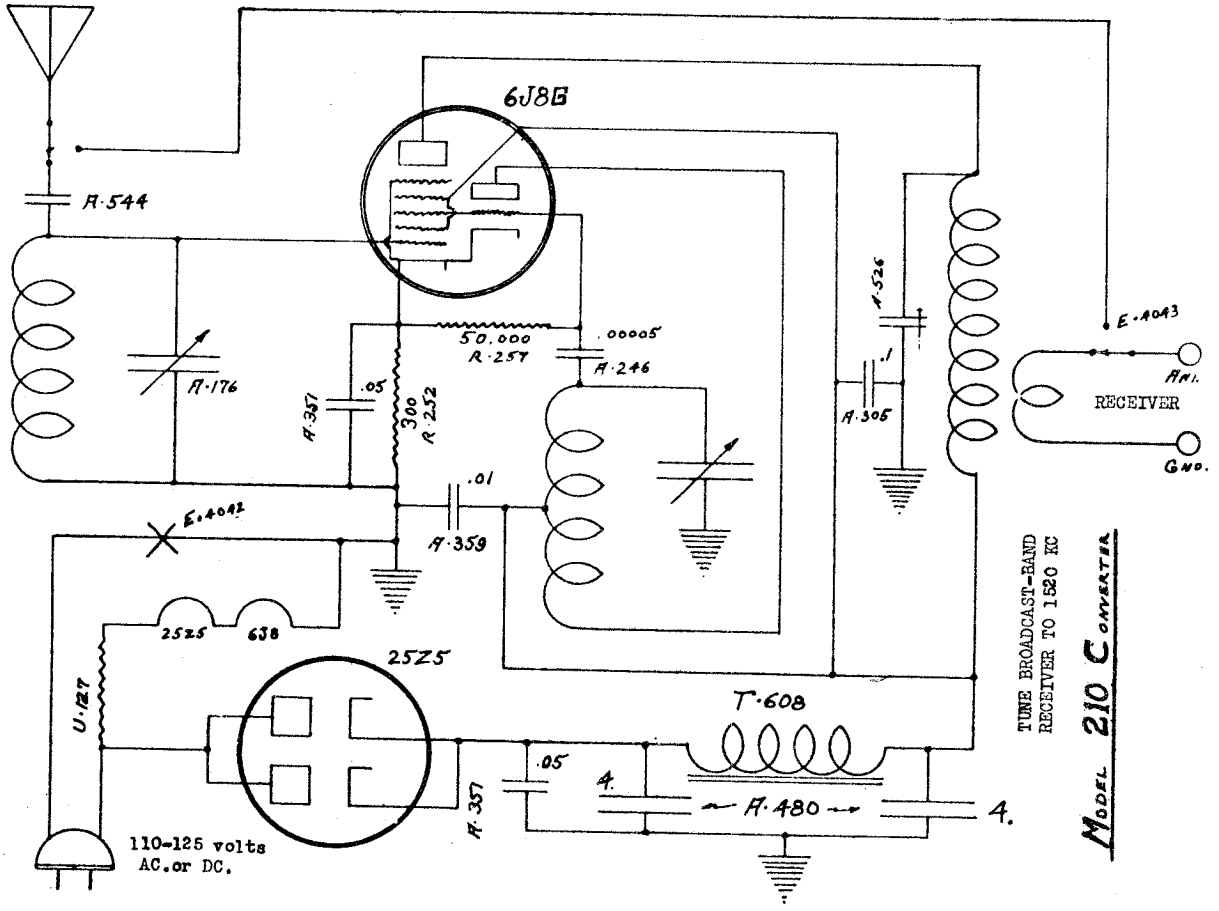

©John F. Rider, Publisher

INTERNATIONAL RADIO CORP.

MODELS 1030,1035
MODEL 1140
Schematics,Socket

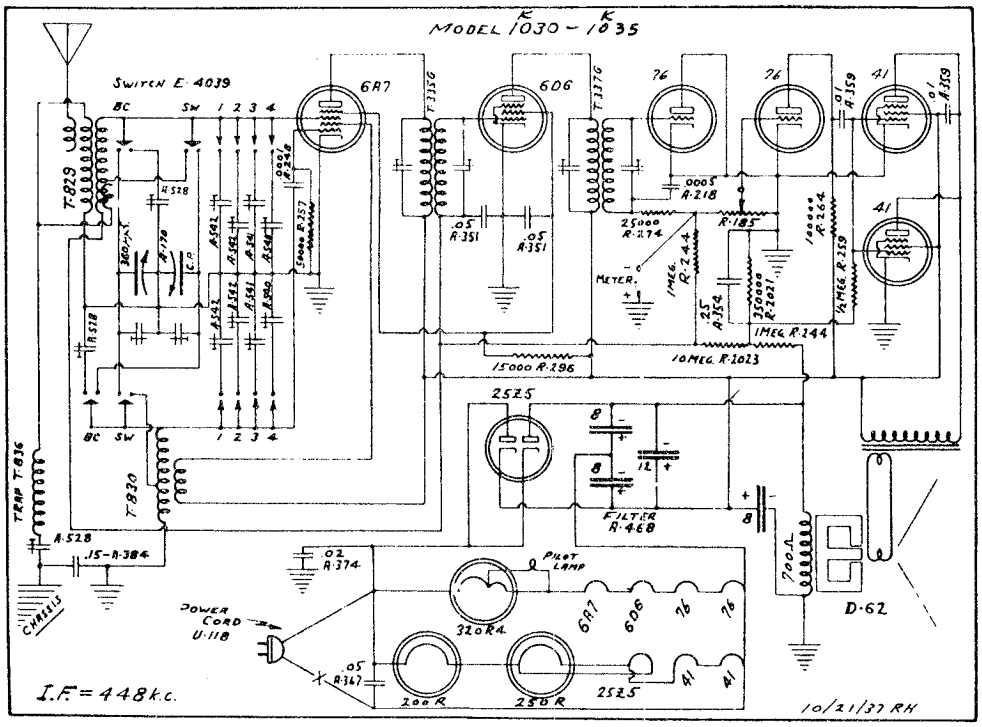

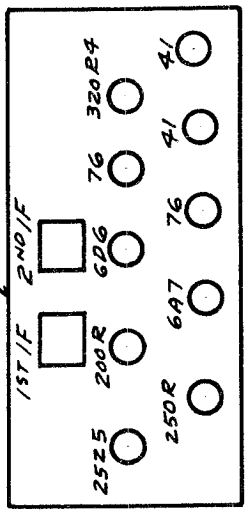

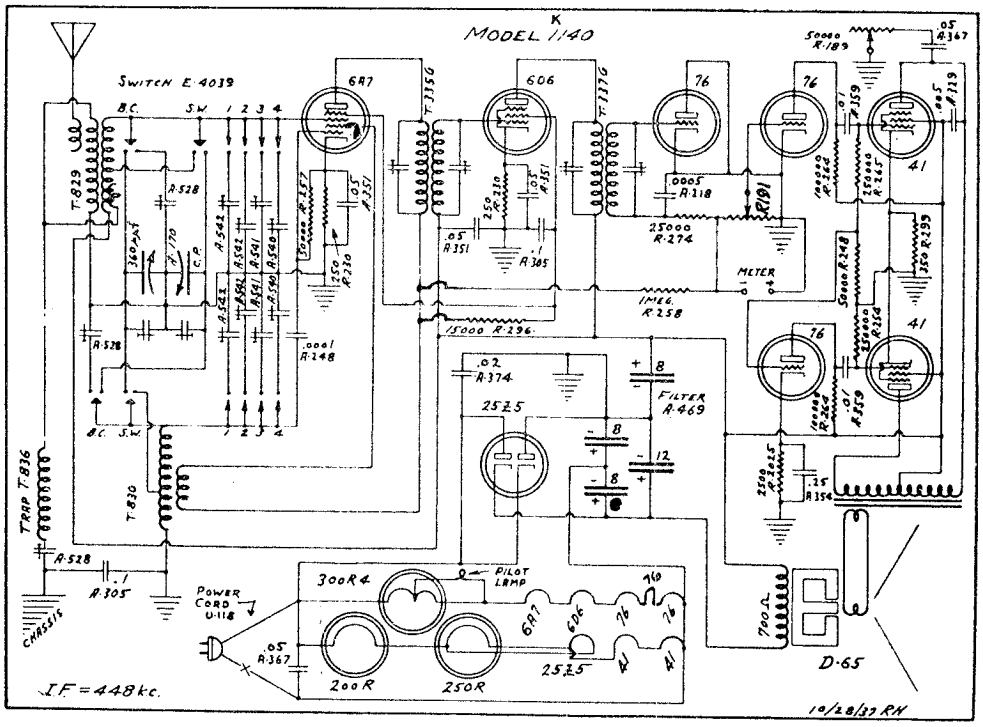

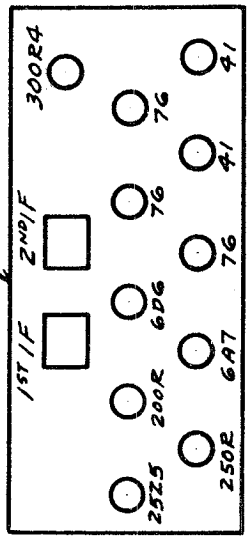

FOR
BOTTOM VIEW OF CHASSIS
SEE MODEL-1129

©John F. Rider, Publisher

KADETTE MODELS K-1030 & K-1035 K - 1 1 4 0

This chassis is designed to operate on 110-120 volt, 50-60 cycle alternating current power lines. It is a two band receiver covering the American broadcast band and Police, Airport and 49 meter European bands.

The following tubes are employed:

6A7	Oscillator-Mixer	41	Audio Output
6D6	I. F. Amplifier	200R	Ballast tube
76	Detector	25Z5	Rectifier
76	1st Audio	250R	Ballast tube
41	Audio output	320R4	Regulator tube (300R4 on K-1140)

Additional 76 as Inverter on Model K-1140

ESSENTIAL DATA

GENERAL INFORMATION: The intermediate frequency employed is 448 Kc. The standard type of output meter should be used to indicate signal strength. It should be connected from plate to plate on the 41 tubes. The trimmer on the high capacity section of the tuning condenser is the Short Wave *oscillator* trimmer. The trimmer on the low capacity (cut plate) section of the tuning condenser is the Short Wave antenna (this trimmer will have been removed at the factory in most sets). The trimmer in the center of the three gang strip is the Broadcast oscillator trimmer. The one on the opposite end from the wave trap is the Broadcast antenna. The Short Wave *must* be aligned *first* as the trimmer settings affect the broadcast alignment.

THE PUSH BUTTONS: Six push buttons will be noted below the dial. Depressing the right-hand button marked "Dial" connects the tuning condenser across the broadcast coils for manual operation of the set, with the dial, on the broadcast band. Depressing the next to right-hand button marked "S. W." connects the tuning condenser across the short wave coils for manual operation of the set, with the dial, on the short wave band. Each of the other four buttons connects one of the pairs of trimmers on the back of the receiver across the broadcast coils. These are tuned to each of the four fixed stations desired by the customer. (See section on alignment of Preselected Push-button Stations.)

THE "METER" JACK: This jack is connected across the A.V.C. load resistor so that, with a signal into the set, a voltmeter will show a deflection where inserted in these jacks. Maximum reading on such a meter will be a resonance indicator which can be used on broadcast station signals. As high a resistance meter as possible should be used.

ALIGNMENT

INTERMEDIATES: To align the I.F. circuits set the signal generator to 448 Kc. and feed its modulated signal direct to the antenna. Depress the right-hand button marked "Dial". Keep the signal as low as possible, turning down the oscillator output as the set approaches resonance and the sensitivity increases. Adjust the first I.F. transformer trimmers for maximum meter reading. Repeat this process on the 2nd I.F. transformer. Go over both adjustments at least three or four times for accuracy. If the adjustments are not made accurately sensitivity and selectivity will be poor and I.F. oscillation may result. Finally, adjust the trimmer on the tuned wave trap for *minimum* meter reading.

SHORT WAVE: Depress the button marked "S.W.". Turn the dial to minimum frequency (6800 Kc.) and feed a very weak 6800 Kc. signal to the antenna. Adjust the short wave oscillator trimmer to maximum reading. If not removed, peak short wave antenna trimmer to this setting. Do *not* attempt to align at the lower frequencies on this band.

BROADCAST: Depress the button marked "Dial". Turn the dial to 1400 Kc. and feed a very weak 1400 Kc. signal to the antenna. Adjust the broadcast oscillator trimmer for maximum reading. Then peak the broadcast antenna trimmer to this oscillator setting. Alignment at lower frequencies is accomplished by bending plates on the tuning condenser. Alignment should be checked at 1000 and 600 Kc.

PRESELECTED PUSH BUTTON STATIONS: When placing the receiver in operation it is necessary to adjust, or align, it to the user's choice of four favorite stations. There are four pairs of adjusting screws at the rear of the receiver. They are numbered from 1 to 4, reading from *right* to *left;* pair number 1 being the adjustment for the first (left hand) button—pair number 2 the adjustment for the next button (second from left) and so on. The upper (top) trimmers are across the oscillator coil. Always "find" the station with this trimmer. Then peak the bottom (antenna) trimmer to this using the voltmeter in the jacks as a resonance indication. While the receiver may be adjusted "by ear" with fair, and usable, accuracy—particularly on strong nearby stations—the use of a meter is highly desirable for greatest accuracy and best operation. When this receiver was tested at the factory, the adjusting screws, at the rear, were set approximately in the middle of the range, in frequency, shown above them on the dial. To adjust any pair of screws to a lower frequency, turn them to the right. To adjust to a higher frequency, turn them to the left.

With the right-hand button depressed, tune-in a desired station by means of the tuning knob and dial—preferably the station having the lowest frequency (in kilocycles) of the four selected for automatic operation. Then after noting the program, depress the first button on the left and, at the rear, adjust the number 1 pair of trimmers to this station and program.

Then with the right-hand button depressed, tune-in the second of the four selected stations—the one next to the lowest in frequency preferably. After noting the station and program, depress the second button from the left and, at the rear, adjust the number 2 pair of trimmers to the station and program.

In a similar manner the stations may be located, identified and the adjustments at the rear made for the balance of the first four buttons. It is desirable to adjust so that the first button, at the left, tunes-in the lowest frequency of the desired four stations, and the fourth button the station with the highest frequency. Note approximate ranges indicated on the label at the rear of the receiver, above the trimmers.

A printed sheet of call-letters is provided with each receiver. The call-letters of the four selected favorite stations may be cut from the sheet and inserted in the corresponding knobs in the space provided.

NOTE: Alignment may frequently be made more rapidly by connecting the antenna to a calibrated oscillator or signal generator. Adjustment of each of the pairs of trimmers can then be quickly made to the signal of the calibrated oscillator which is set, in turn, to the approximate frequencies of the desired stations. The adjustments should be finally made on the stations themselves, however, using a meter and the procedure indicated above. This method of aligning, or adjusting, will avoid the possibility of setting them to the wrong station as there are times when other stations, near to the desired station in frequency, are broadcasting the same program. When this condition exists it may be necessary to wait to hear station announcement unless the calibrated oscillator has been used to obtain the approximate settings.

K-1030, K1035 AVERAGE SOCKET VOLTAGES

Tube	Position	Ek	Eg	Ega	Egs	Esu	Ep
6A7	Det.-Osc.	0	*-1.5	165	90	--	165
6D6	I.F.	0	*-1.5	—	90	0	165
76	2nd Det.	0	*-.45	—	--	--	0
76	1st Audio	0	‡	—	--	—	†35
41	Output	0	*-12.5	—	165	—	160
41	Output	0	*-12.5	—	165	—	160
25Z5	Rect.	165	—	—	--	—	AC

Line voltage 118 volts, 10% variation allowable. Measurements made from tube prong to circuit ground with 1000 ohms per volt instrument on 250 volt scale.
* Not measureable-calculate from 50 volt drop across speaker field.
† Through .1 megohm ‡ Diode biased

K-1140 AVERAGE SOCKET VOLTAGES

Tube	Position	Ek	Eg	Ega	Egs	Esu	Ep
6A7	Osc.-Mixer	*-2.6	0	165	100	—	165
6D6	I.F.	*-2	0	—	100	*-2	165
76	Det.	0	0	—	—	—	0
76	1st Audio	0	‡	—	—	—	†-25
76	Inverter	*-2.3	0	—	—	—	†-25
41	Output	**-12.5	0	—	165	—	160
41	Output	**-12.5	0	—	165	—	160
25Z5	Rectifier	165	—	—	—	—	A.C.

Line 118 volts. 10% variation allowable. Measurements made from tube prong to circuit ground with 1000 ohms per volt instrument on 250 volt scale except *-10 volt scale and **-50 volt scale.
† Through .1 megohm ‡Diode biased.

©John F. Rider, Publisher

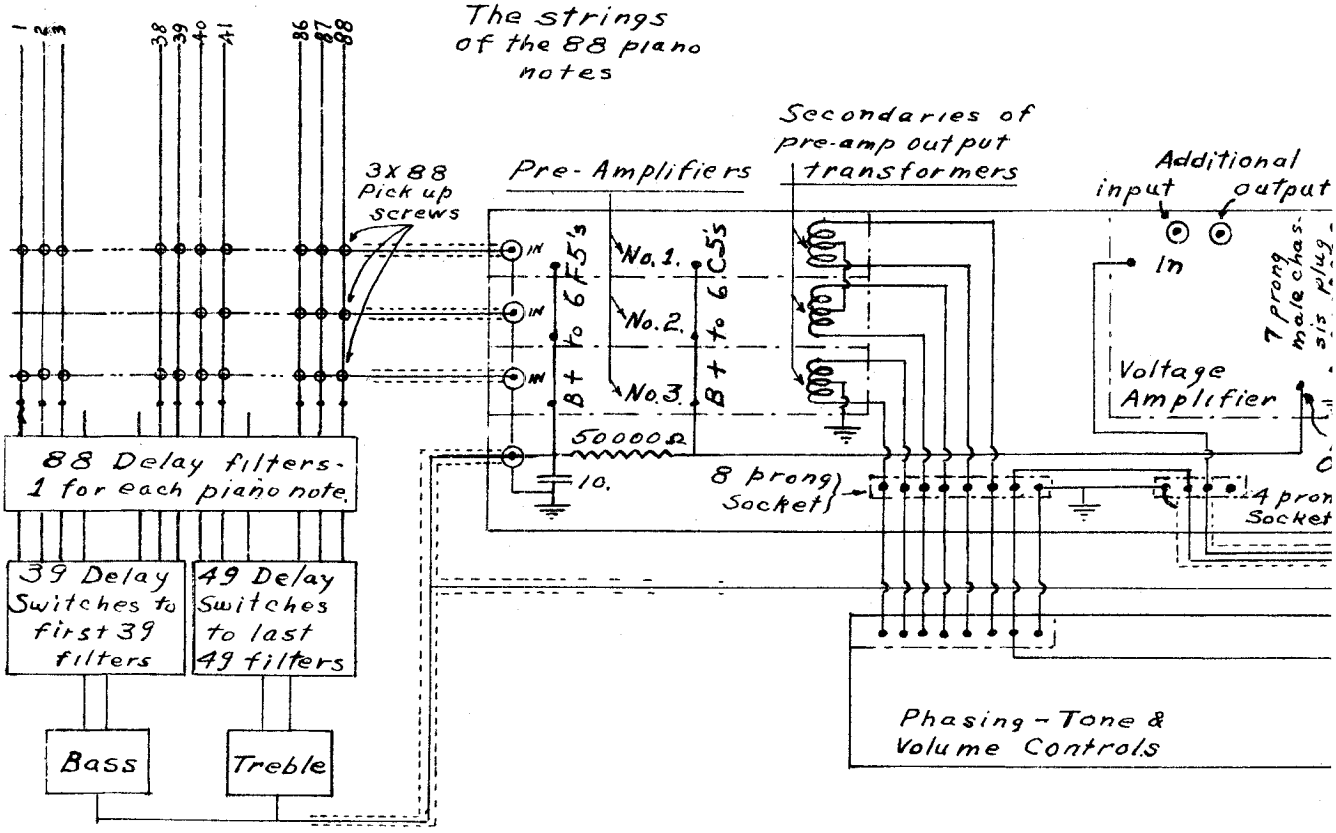

Polarizing Switches

Master Assembly L

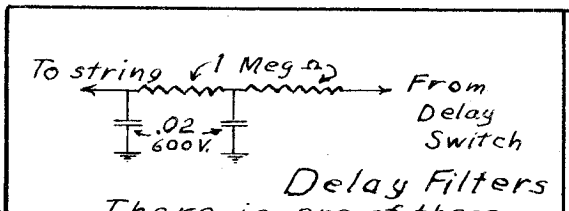

Delay Filters

There is one of these filters for each of the 88 notes

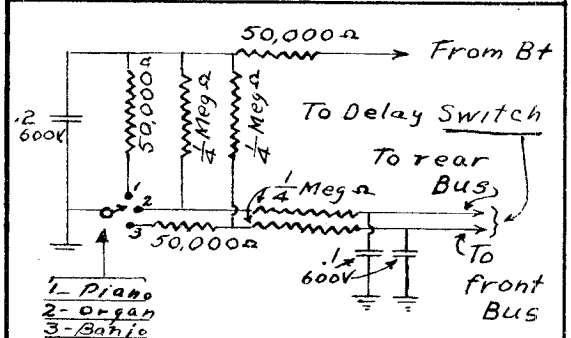

Polarizing Switch Circuits

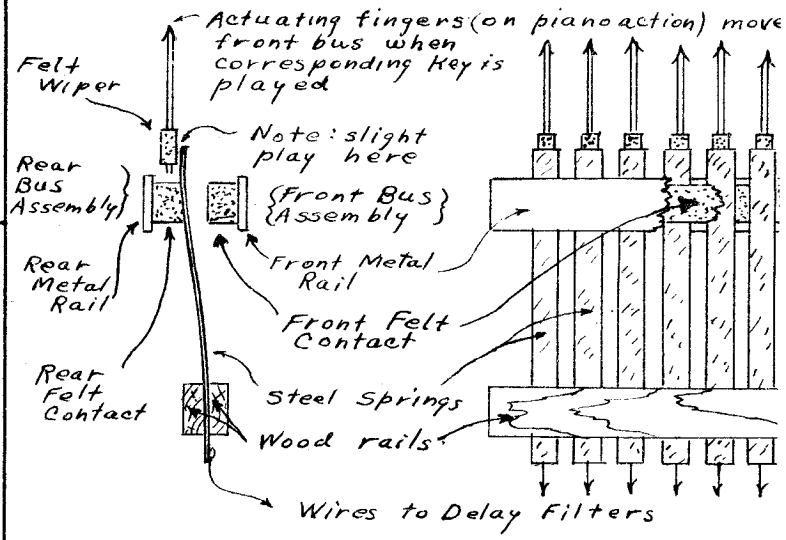

Details of Delay Switches

©John F. Rider, Publisher

ER BROS.

MODEL PR3-P03
Super Electone Piano
Wiring Assembly, Delay Switches Details
Polarizing Switch and Power Stage Circuits

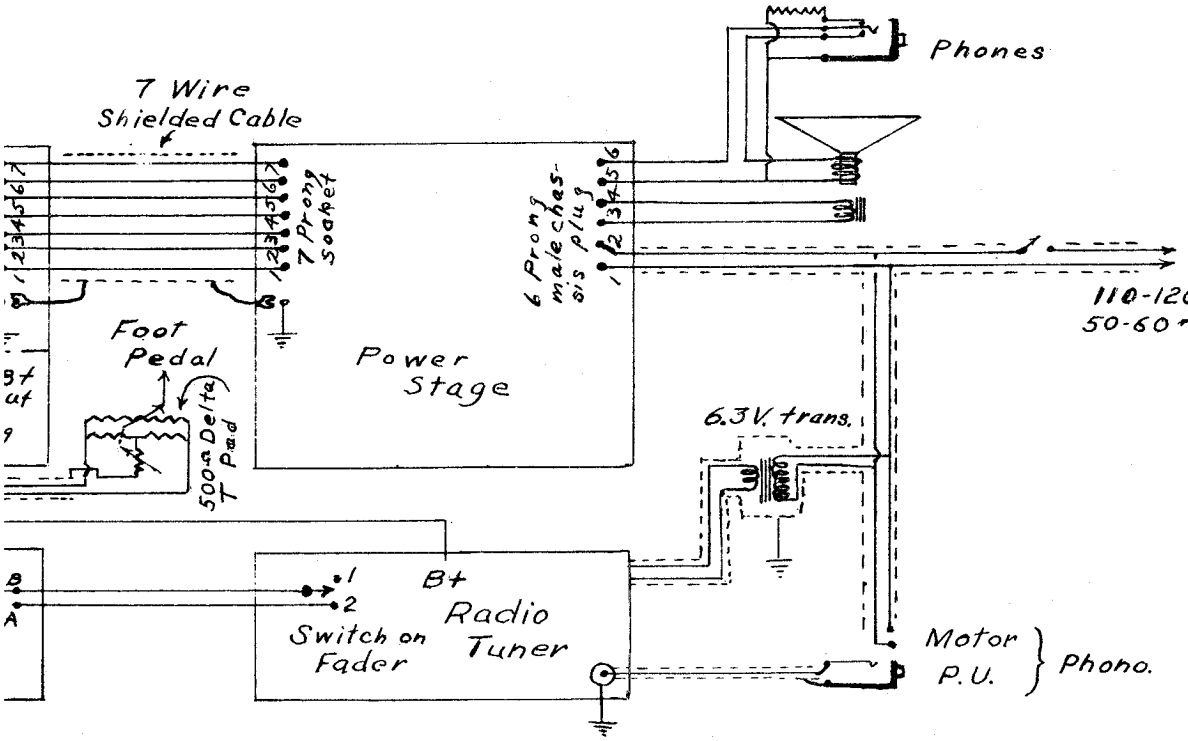

Diagram.

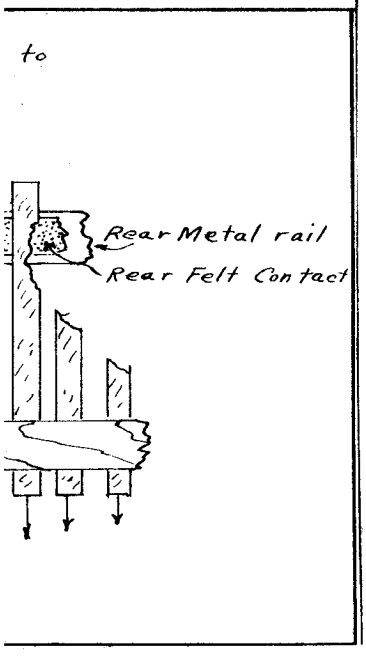

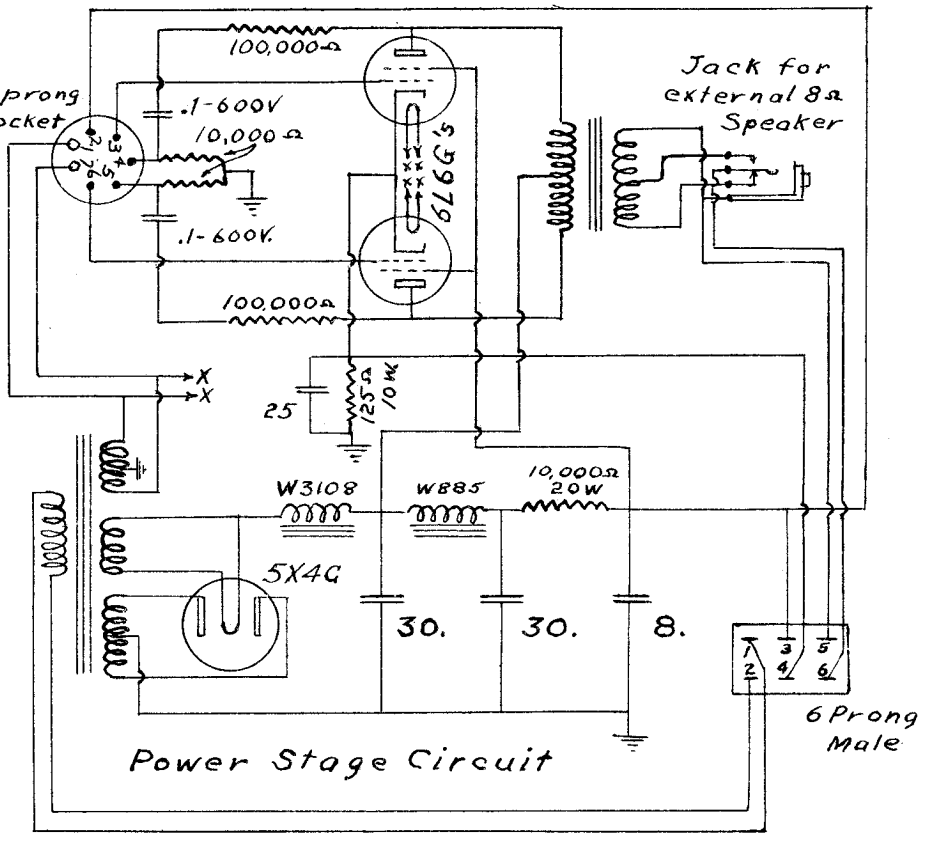

KRAKAUER BROS.

MODEL PR3-P03
Pre-Ampl. and Ampl. Circuits
Radio Tuner Circuit

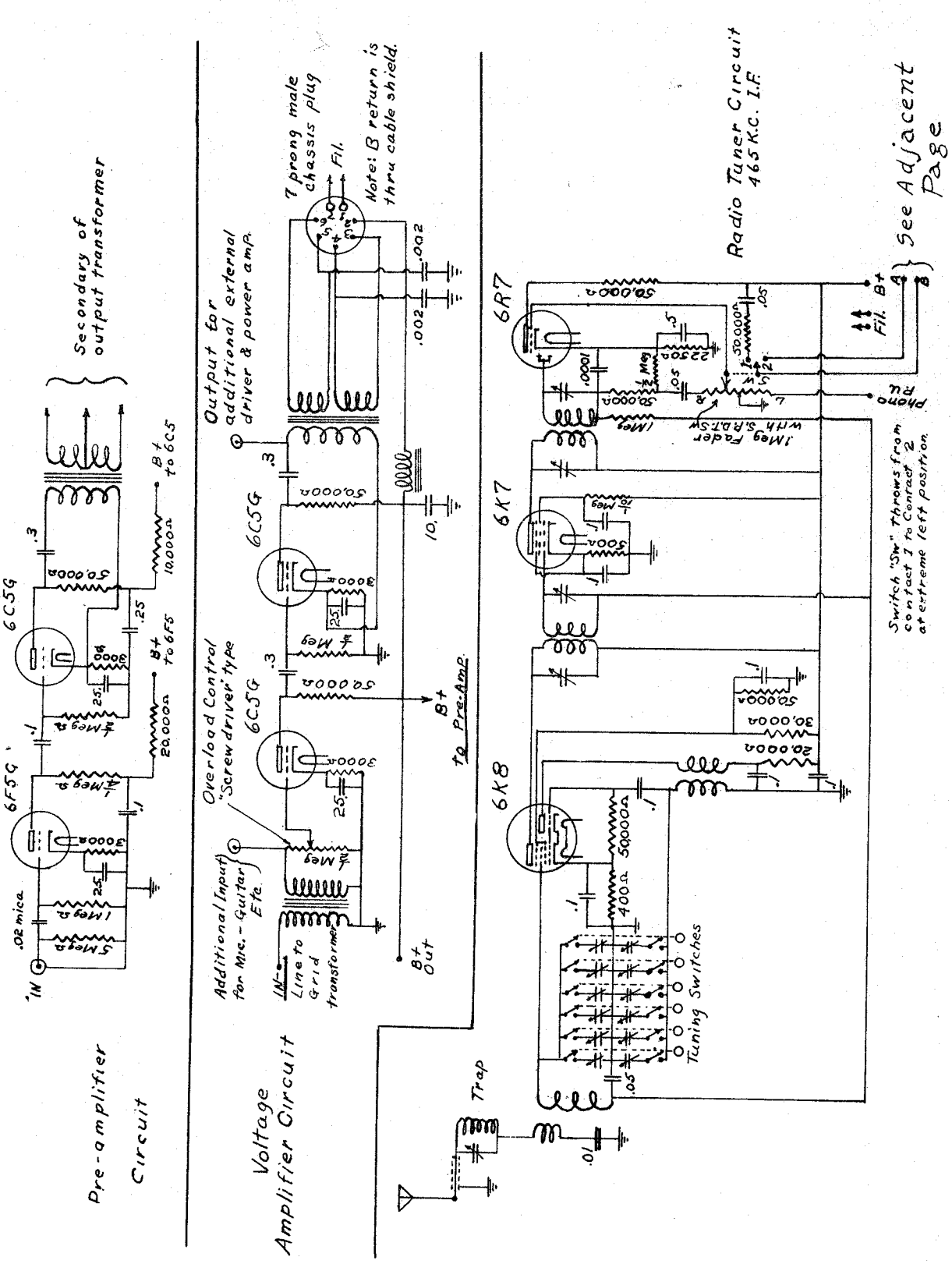

©John F. Rider, Publisher

MODEL PR3-P03
Phasing-Tone and
Volume Cont. Circuits

KRAKAUER BROS.

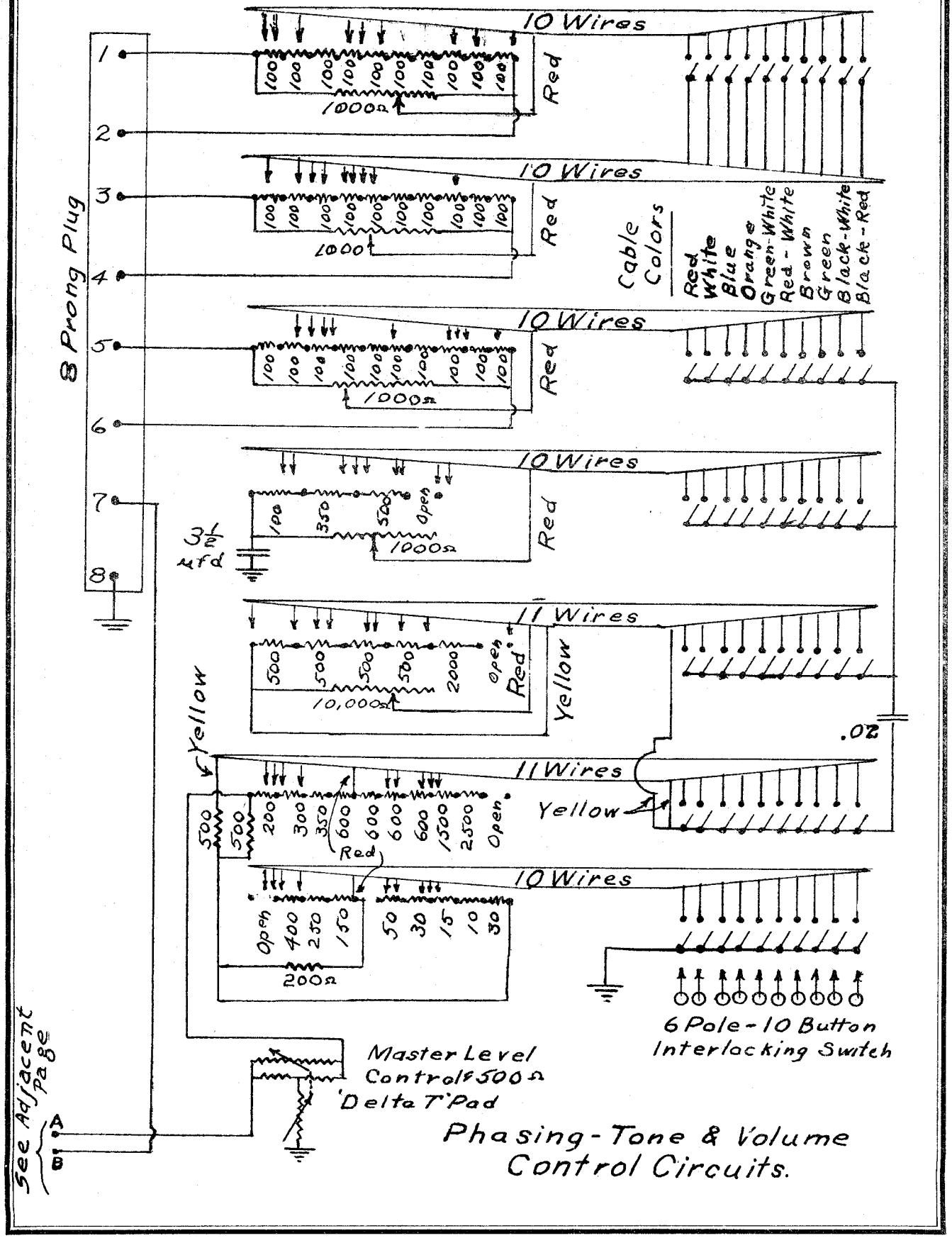

Phasing-Tone & Volume Control Circuits.

©John F. Rider, Publisher

KRAKAUER BROS.

MODEL PR3-P03
Service Notes

KRAKAUER ELECTONE
MODEL PR3-P03

Service Notes

SETTING-UP OF ACTION CONTROLS: Due to variations in the case design of pianos, the components will be located in different positions in different instruments; however, each of the controls which comes to the attention of the serviceman will be plainly marked. The controls will be positioned either directly under the top cover of the piano or in back of the lower section underneath the keyboard. If in the latter position, the lower front board of the piano can be removed by releasing a simple spring catch at the center of its top edge.

Turn on the power and set the left end push-button of the tone control switch. This connects the three phasing control potentiometers and the two (bass and treble) tone control potentiometers. Following the accompanying diagram and the customer's general desire as to whether a basically thick or thin tone is wanted, try various settings of the five controls mentioned above until the customer is satisfied. Select the button which this tone is to be set up on permanently. Take the corresponding color coded wire at each of the resistance banks opposite each of the five potentiometers and connect each wire to the resistor numbered the same as the nearest mark to the pointer of its potentiometer. When making these set-ups, the polarizing switch circuits should be set to that one of the three positions (piano, organ or banjo) which the customer expects to use most with this particular tone. Do not set-up the basic "regular" piano tone at this time. Do not set the volume control on the push-buttons until later.

When all tones other than the regular piano tone are set up, this tone quality can then be set in the following way: Phasing control No. 1 at 10, Phasing control No. 2 at B (which is the balanced or "no response" position), Phasing control No. 3 at B, Treble cut tone control at 1000, and Bass cut tone control between 3,000 and 10,000 - as the customer's ear dictates. The controls are left in this position so that the left-hand button is always "Regular Piano Tone".

The pre-set volume control may now be adjusted. The two red wires (left-hand button) should be placed on the sixth connection of each of the volume control banks. Press the other buttons in order and set the pairs of wires corresponding to these buttons so that the volume of each setting is equal to the volume of button No. 1. As this is a constant impedance type level control it is necessary to set both the wires of a pair to the same resistor in the respective banks. That is, with one wire of a button set to, say resistor No.5, then the other wire from this button must also be set to resistor No. 5 on its bank.

GROUNDING AND BONDING: If oscillation is present in the amplifiers it is probably due to defective grounding of the components or bonding of the shields. Another cause is an open grid connection. ALL SHIELDS, CHASSIS, TRANSFORMER CORES, SPEAKER FRAMES, AND OTHER MECHANICAL COMPONENTS MUST BE FIRMLY GROUNDED. Oscillation above audio frequencies is often the result of apparent speaker rattles. This can be checked by using the head-phones to determine if the rattle is in the speaker or the amplifier. In case of oscillation the condensers across the secondary of the driver transformer (which is in the pre-amplifier) may be at fault.

Rattles occurring when the pedals are used or on mechanical disturbance, such as pressing on the piano top, pressing down (not striking) the keys, slapping the side of the instrument, etc., are usually caused by bad bonding between any two touching conducting objects in the instrument. This is not confined to the electrical circuits alone but may be, for example, between one of the piano action brackets and its supporting bolt. Perseverance is the only way to find the trouble and bonding is the cure.

POLARIZING CIRCUIT TROUBLES: Terrific clicks when a key is pressed or struck is usually due to an open ground on its delay filter condensers. If the trouble is on all keys, it is probably an open ground wire to the common bus at the ground end of these condensers.

A short of a piano string to ground may be tested with a 1000-ohm per volt voltmeter which should read 0.2 volt on the 10-volt scale or 0.3 volt on the 15-volt scale, when connected between the string and ground, the string being positive. Low voltage indicates a short, providing the corresponding delay switch is not open and the polarizing switch is on "banjo".

The delay switch arms should normally lay against the rear bus. Each should have a slight play between itself and its actuating finger. Bend the finger to adjust. The resistance between the arm and the bus (both front and rear, as the key is up or down respectively) should be between 30,000 and 100,000 ohms. The exact resistance is not important, but if too high the associated note will "speak" with low level and if too low the note will "speak" with a dull thump or thud (associated with its tone) when the polarizing switch is on "organ". If the resistance is too low file away some of the felt on the bus (at the point of contact) using a strip of course sandpaper for a file. If the resistance is too high apply a tiny drop of "Aquadag" (colloidal graphite) dissolved in ammonia to form a thin liquid. Allow to dry and repeat if necessary. Small quantities of "Aquadag" are available from Krakauer Bros. at One Dollar per ounce (enough for many jobs). Larger quantities should be obtained from the Acheson Graphite Co.

DIRT IN PICK-UPS: Dirt or felt fibres will cause temporary grounds or shorts between pick-up screws and the strings. It causes rattles, hisses, or squeals when the polarizing switches are on "piano" or "banjo" which are absent or lessened in the "organ" position. The trouble can be localized to the treble or bass as the corresponding polarizing switches are thrown to the above positions. This trouble is differentiated from a string short, which often acts like it, by the voltage test mentioned under "Polarizing Circuit Troubles". It is unlikely that a piece of good conductor would lie between the strings and the pick-ups without being quickly displaced.

Removal of dirt can often be accomplished by just striking the keys smart blows and the accompanying vibration of the string will shake the dirt loose. More stubborn cases require blowing with a blower. A vacuum cleaner usually has a blower attachment which should be run for a few minutes before directing its air stream into the piano so as to clean out old dust from the hose or more dirt will be blown into the piano than will be blown out. Do not blow with your breath as the moisture will increase the trouble.

HUM: Outside of the usual causes of hum in an amplifier the only trouble to expect is from bad shielding, bonding, or grounding. Before anything else, make sure that the ground wire from the ground post on the back of the instrument really connects to a good ground. A loose grid cap, a defective (open) overload control, or other open low level grid circuits will also cause hum.

MISCELLANEOUS: The overload control should not be set to permit playing much louder than an ordinary mechanical piano. Do not trust the player to cut down with the master level control. If the customer wants louder response on external speaker is necessary to avoid feed-back. Use only a special piano speaker of 8 ohms impedance and which has SPECIAL CORD AERIAL. These are available only from Krakauer Bros. or the Jensen Radio Company will make them to order.

The sprocket on the swell pedal control should engage the chain in such a manner that the swell pedal is one link from full on when the pedal is in the full loud position. Never set this control so that the player's foot can force the arm against its stop inside the control.

Except in the case of major damage, rebuilding of the instrument, or tampering, the pick-up screws should NEVER need adjustment. If the tone quality varies from one note to another, adjustment of these screws is indicated. Information on how to adjust these screws will be given by mail only by Krakauer Bros., 191 Cypress Avenue, New York City on receipt of a detailed letter from the serviceman giving the cause for the need of readjustment. Do not attempt to touch these screws without such detailed instructions, as adjustment requires the aid of a competent piano tone regulator and a peculiar technique which, while simple, must be explained, as the little trick of this technique will never be guessed by an uninformed person. This may seem at variance with the data given in Rider's Volume VIII, but the two additional pickups on each set of strings make this necessary.

Let the service man be warned not to attempt mechanical adjustments to the piano (mechanical) mechanism as these are very delicate, some being as close as 2/1000 inch and require years of training to gain the requisite skill. The push-button radio receiver, shown here as an integral part of the instrument, is optional and may or may not be in the piano you service. The frequencies covered by each push-button will be plainly marked at the adjusting screws and their setting is conventional.

For additional information on the Electone Piano, see the special sections of Rider's Volumes VIII and IX.

©John F. Rider, Publisher

LAFAYETTE RADIO MFG. CO.

MODEL 2A5, 1st Minstrel
MODEL 2001, Minstrel (1932)
Schematics

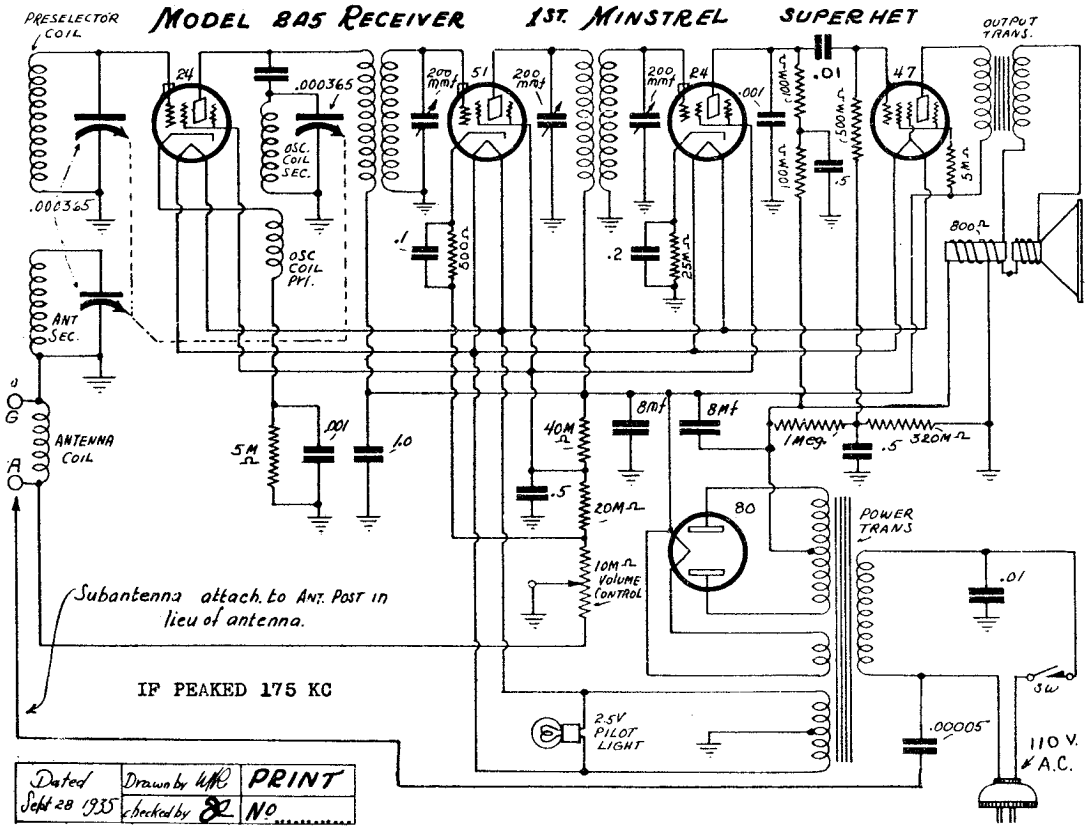

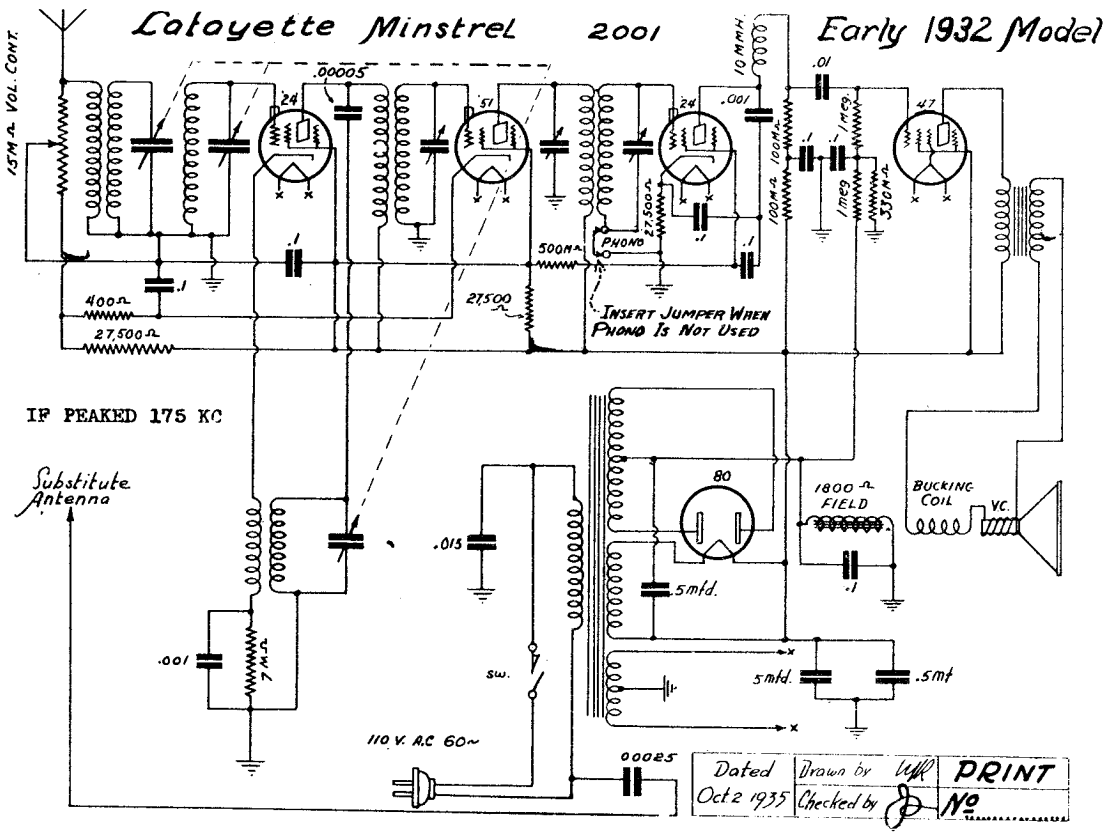

©John F. Rider, Publisher

MODEL Mighty Atom
MODEL JB-3
Schematics

LAFAYETTE RADIO MFG. CO.

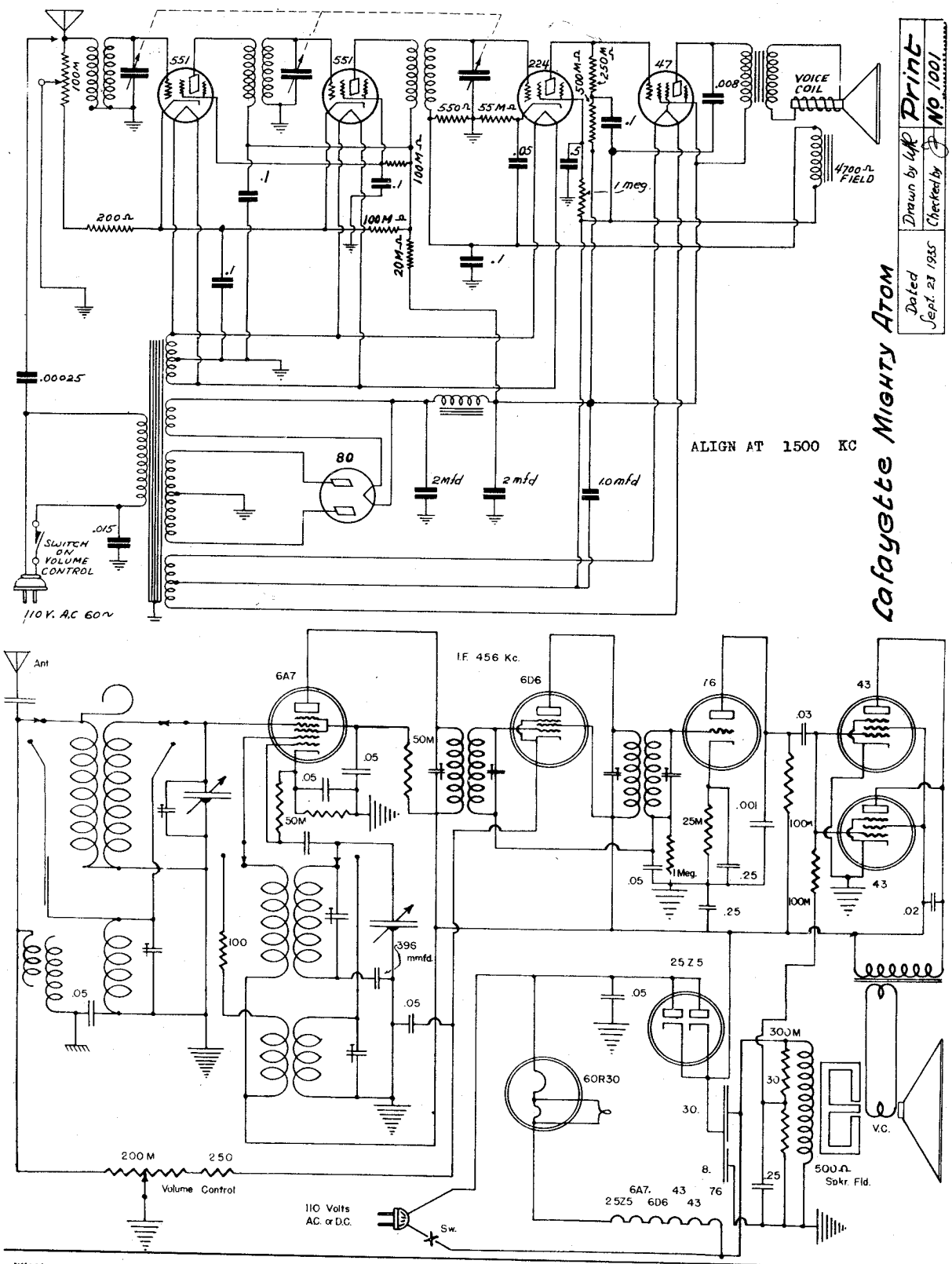

©John F. Rider, Publisher

LAFAYETTE RADIO MFG. CO.

MODEL AS-6
MODEL AS-6
Schematics, Alignment
Trimmers

LAFAYETTE MODEL AS-5
FIVE TUBE "T.R.F." - RADIO RECEIVER P.N. 566

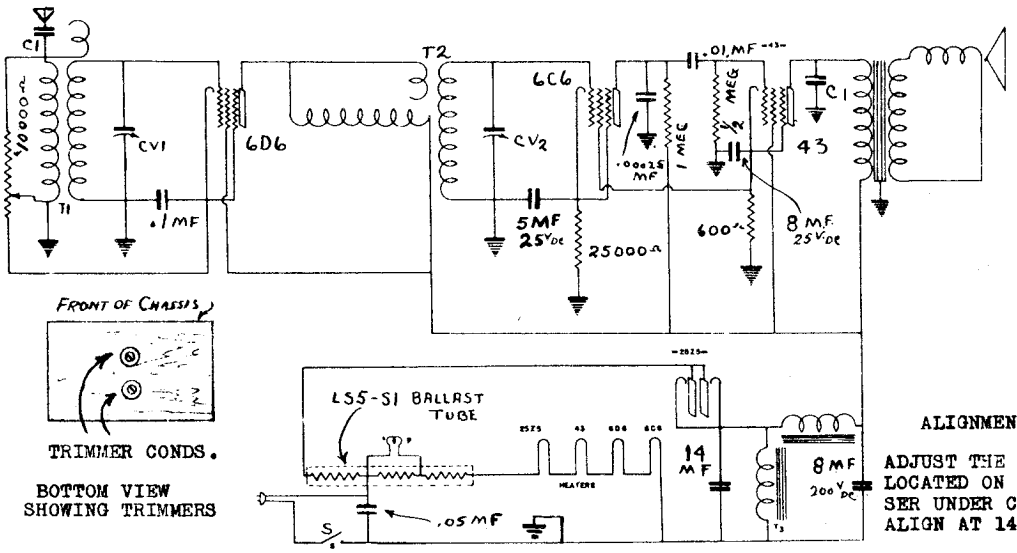

ALIGNMENT PROCEDURE

ADJUST THE TWO TRIMMERS LOCATED ON TUNING CONDENSER UNDER CHASSIS. ALIGN AT 1450 KC

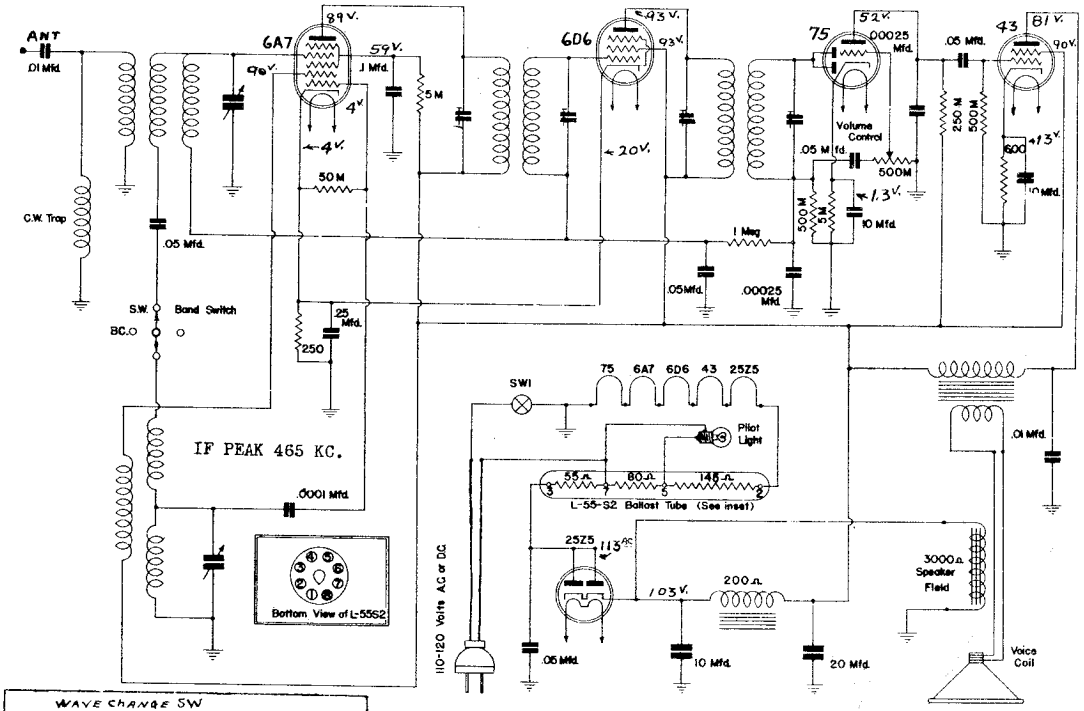

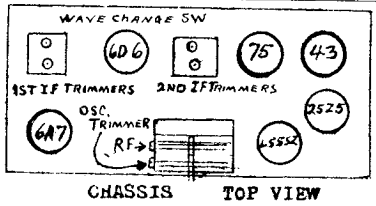

ALIGNMENT PROCEDURE

SHORT ANT. TO GND. SHORT OSC. SECTION OF GANG CONDENSER. CONNECT SIGNAL GENERATOR THRU .00025 MF CONDENSER TO GRID 1ST DET. ADJUST IF AT 465 KC. THEN REMOVE SHORTS. ADJUST RF AT 1400 KC, WITH SIGNAL GENERATOR CONNECTED TO ANTENNA.

TO ALIGN ON POLICE BAND, TUNE 3 GANG CONDENSER TO A 3500 KC SIGNAL. ALL ADJUSTMENTS MADE FOR MAXIMUM SENSITIVITY AND OUTPUT.

Lafayette RADIO RECEIVER MODEL AS-6
6 TUBE-2 BAND SUPERHET'

PRINT No. 505
APPROVED
DRAWN BY
DATED July 25 36

©John F. Rider, Publisher

MODEL T-21, Early
MODEL T-21, Late
Schematics

LAFAYETTE RADIO MFG. CO.

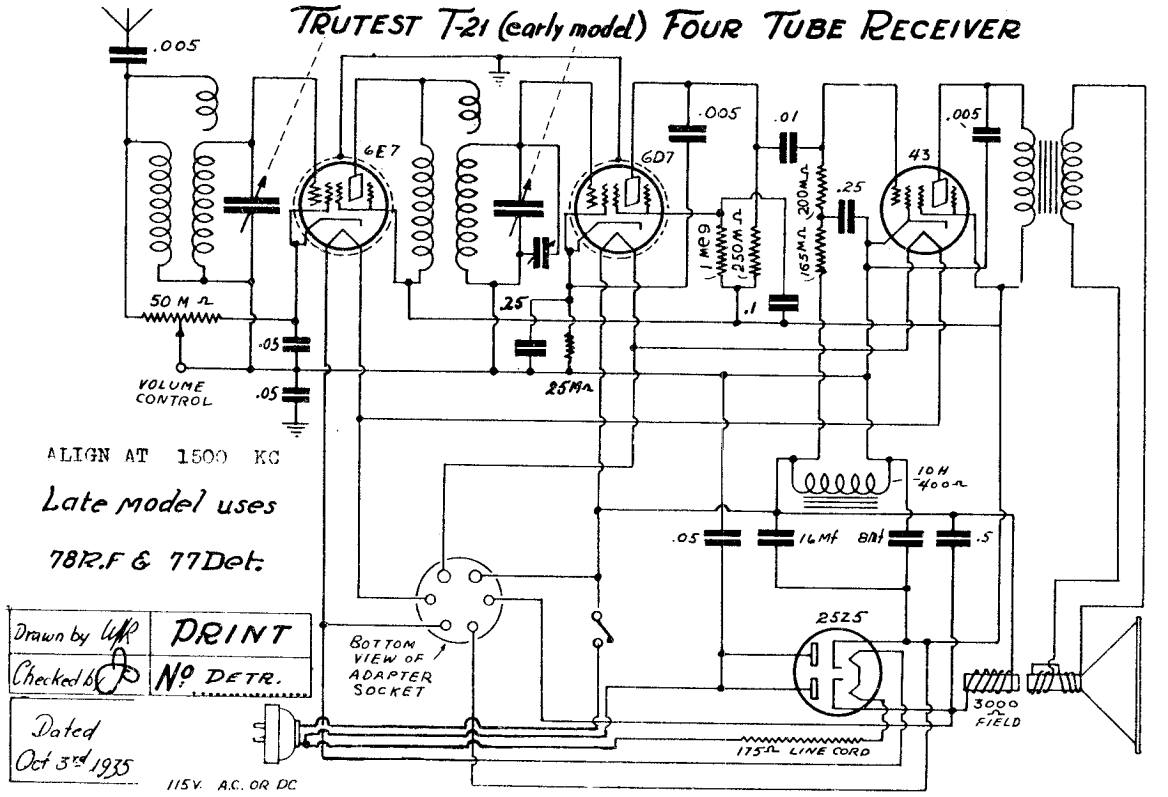

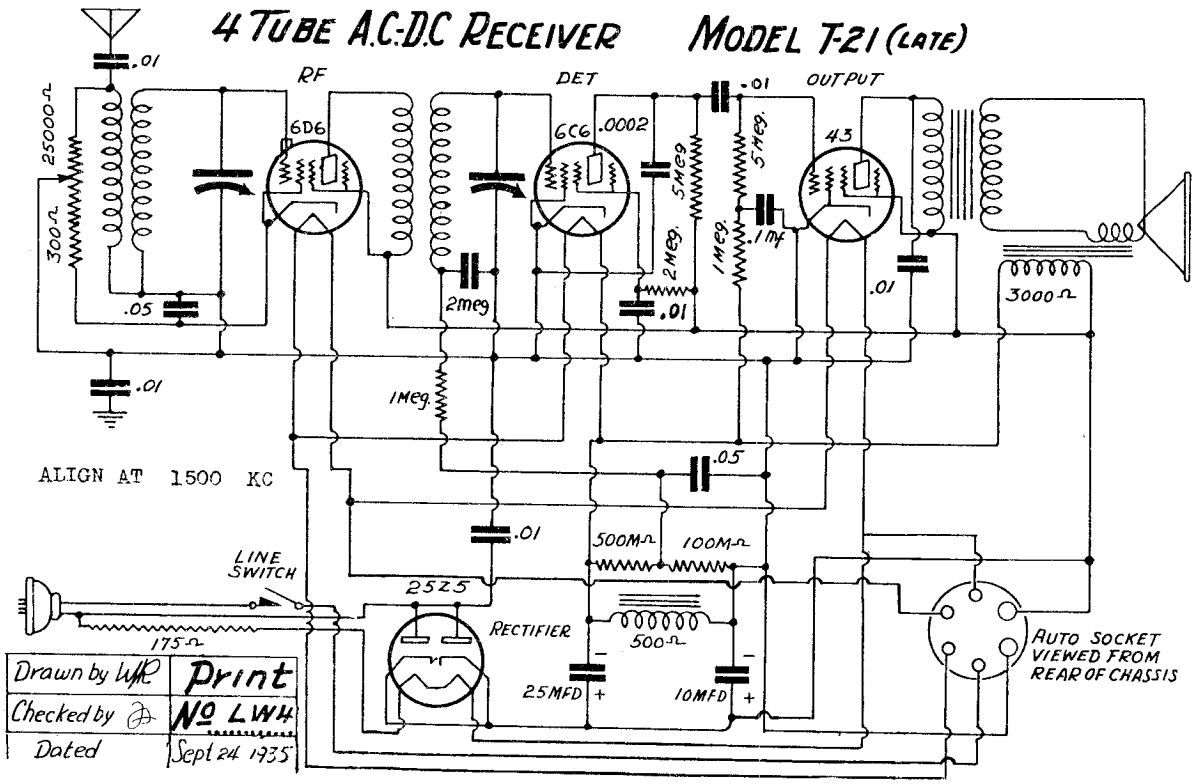

©John F. Rider, Publisher

LAFAYETTE RADIO MFG. CO.

MODEL PA
MODEL M-31 (1936)
Schematics

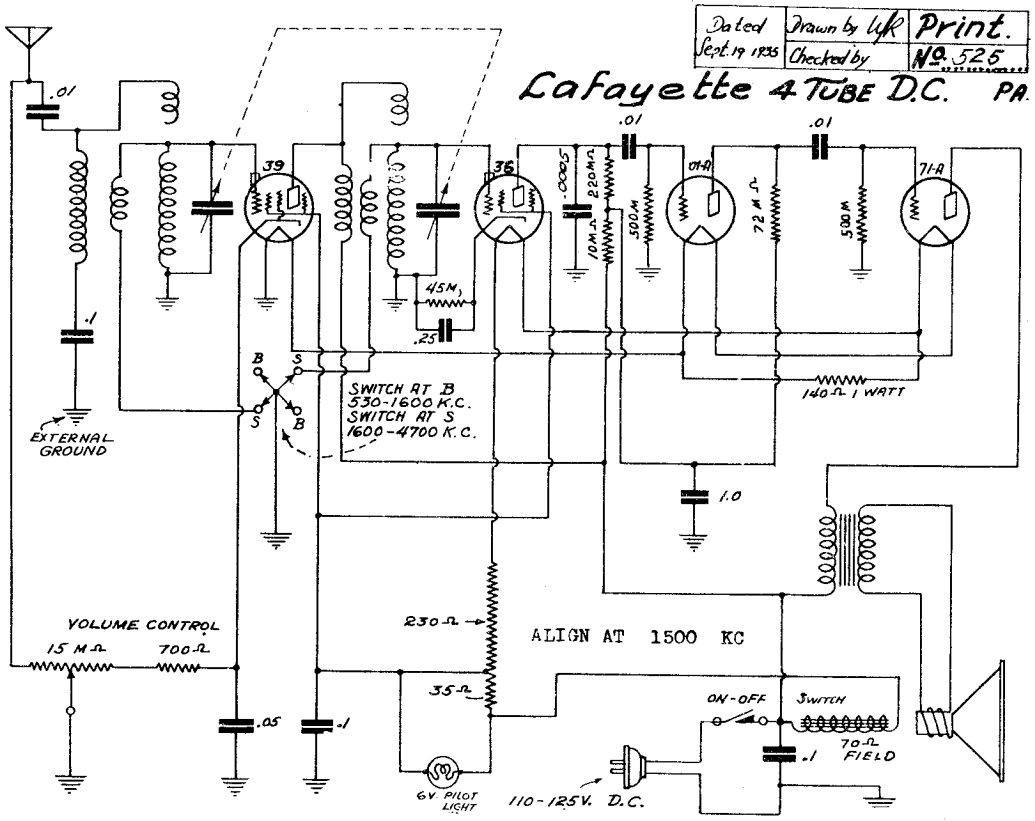

MODEL M 31 (1936)

6 • TUBE • 32 • VOLT • SUPERHET

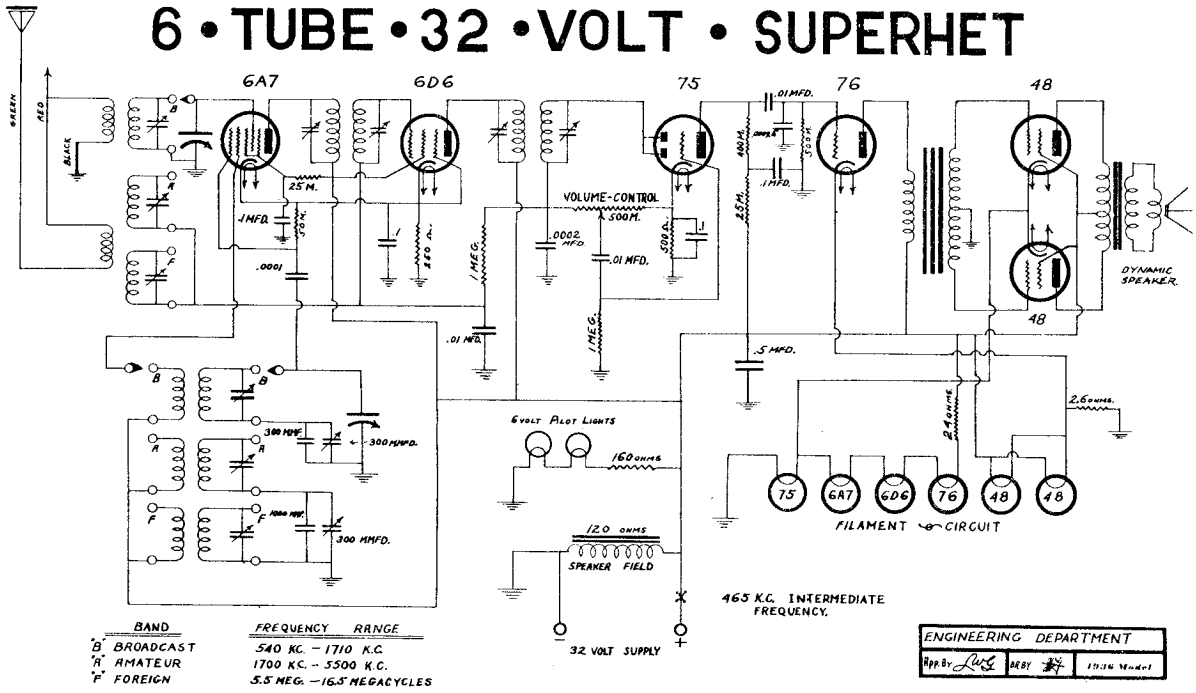

©John F. Rider, Publisher

MODEL M-31-71,
Midget Minstrel
Schematic

LAFAYETTE RADIO MFG. CO.

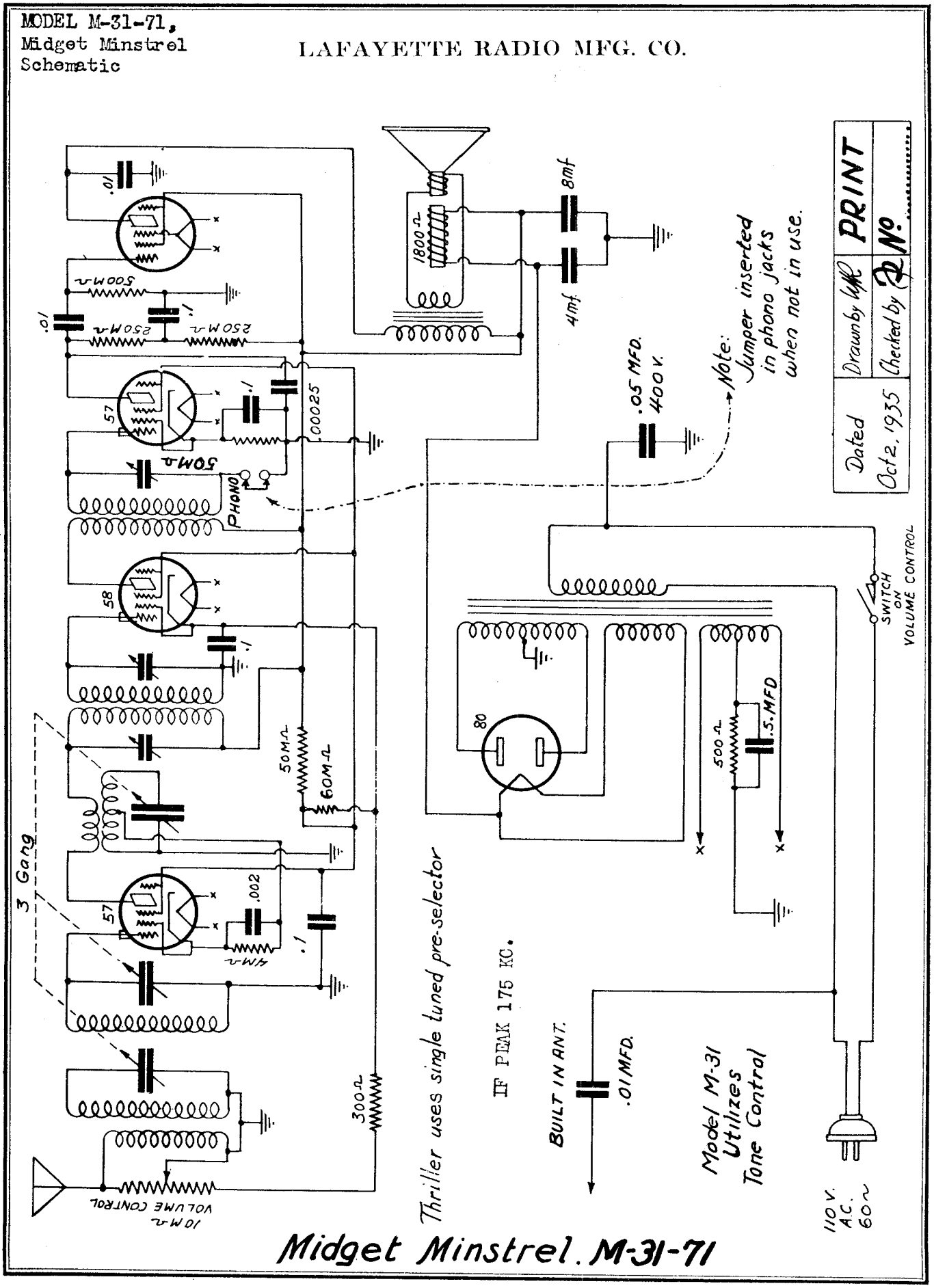

©John F. Rider, Publisher

LAFAYETTE RADIO MFG. CO.

MODELS S-61, S-62
MODEL M-99, Pigmy
Schematics

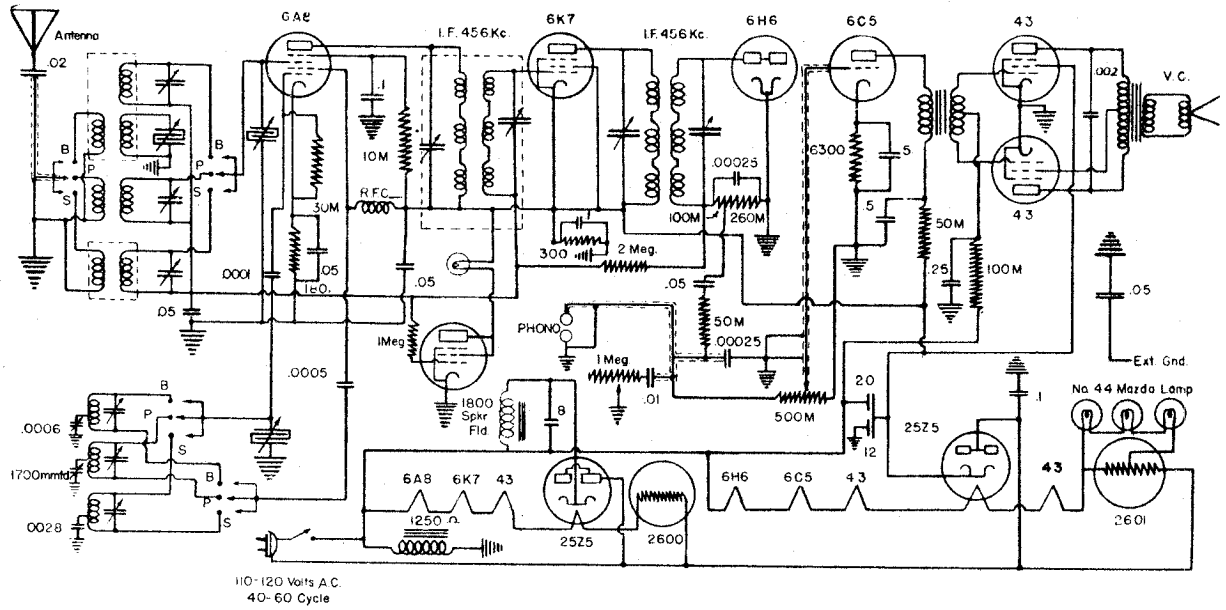

IF PEAK 456 KC.

MODEL S-62 IS IDENTICAL S61 EXCEPT FOR SUBSTITUTION OF EUROPEAN BROADCAST BAND FOR POLICE BAND.

LAFAYETTE S-61, S-62			
11 TUBE · 3 BAND · SUPERHET. RADIO RECEIVER			
Original Drawing:	Corrections by	Approved by	Service Dept
[illegible]	[illegible]		Print No. [illegible]

All resistance in ohms
All capacities in Mfds.

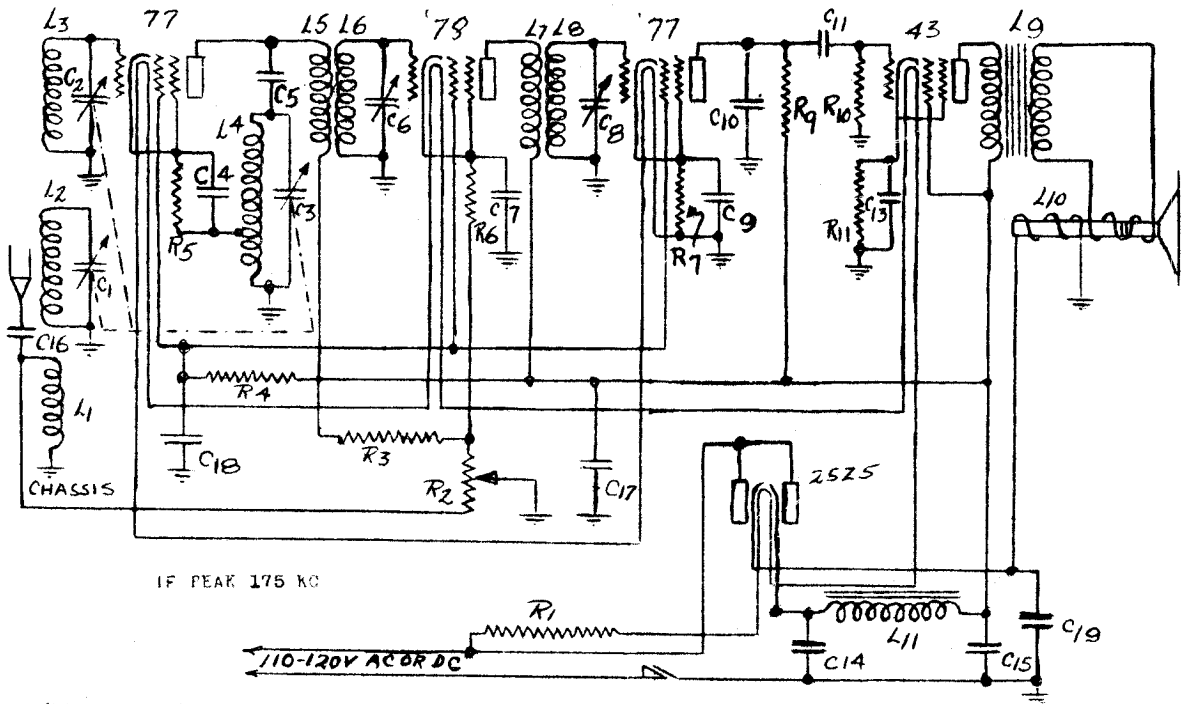

IF PEAK 175 KC

LAFAYETTE PIGMY MODEL M-99	
DRAWN BY [illegible]	CHECKED BY FLESTER
DATE SEPT-7-33	
WHOLESALE RADIO SERVICE CO. INC.	
100 SIXTH AVE	NEW YORK CITY

©John F. Rider, Publisher

MODEL Thriller
MODELS C-78,C-78L
Schematics

LAFAYETTE RADIO MFG. CO.

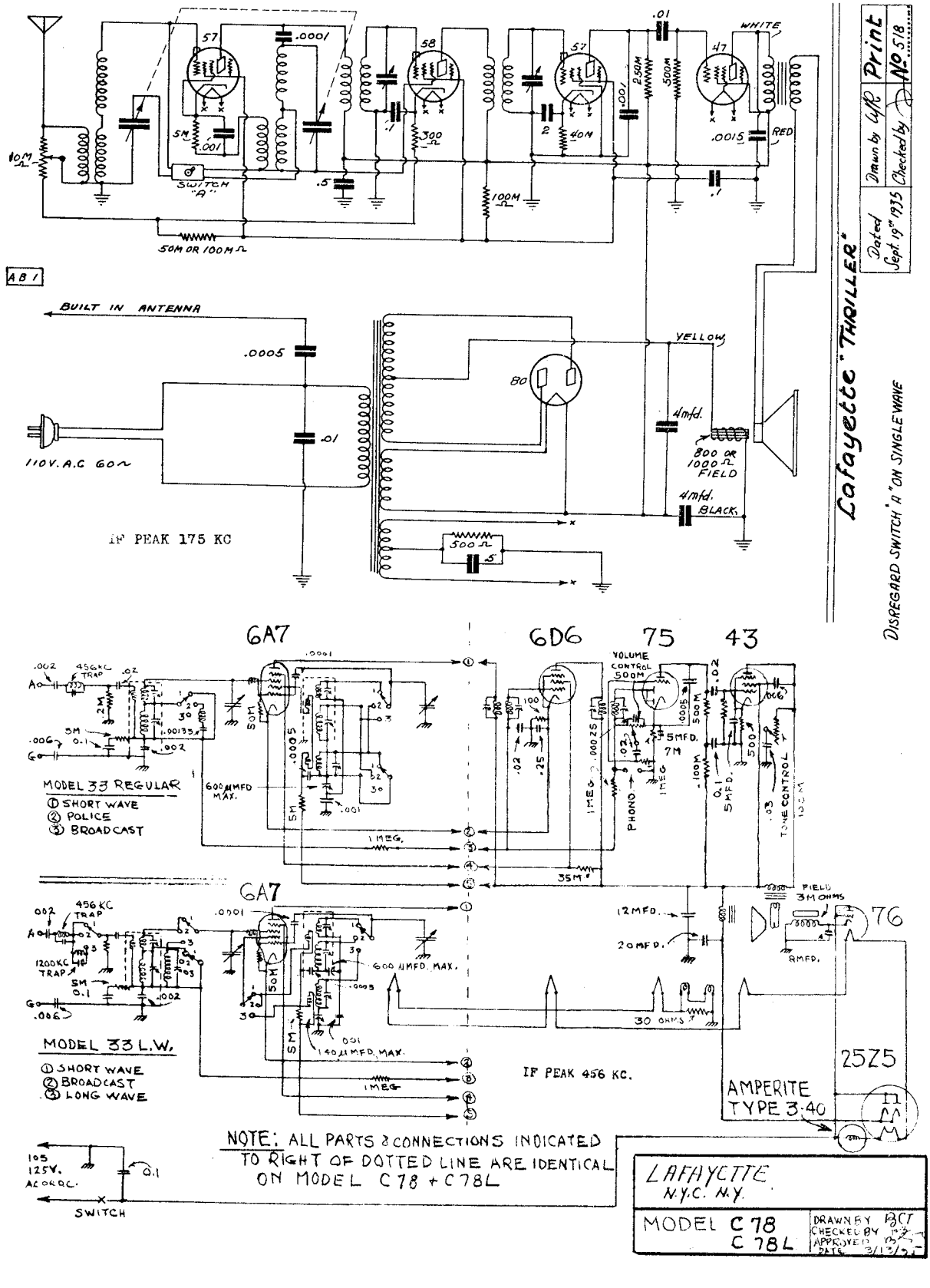

©John F. Rider, Publisher

LAFAYETTE RADIO MFG. CO.

MODEL U-145
MODEL U-155
Schematics

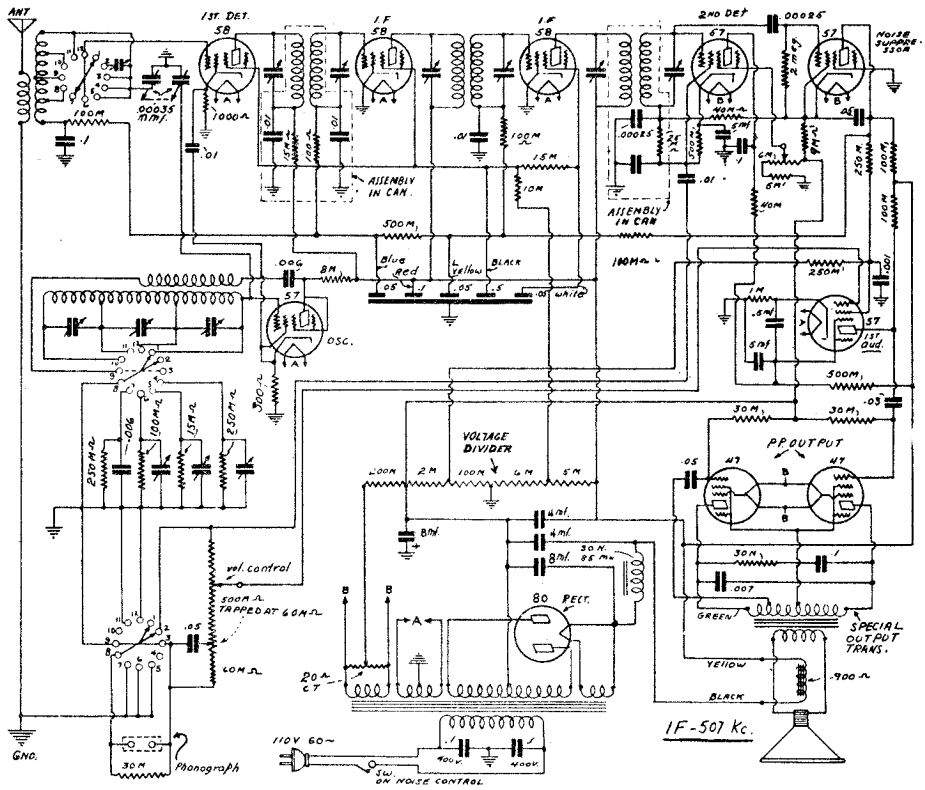

Lafayette Dual Wave
TEN TUBE MODEL U155 A.C. SUPER-HET. 12 TO 550 METERS -
For Dual Speaker Receiver
Voice Coils are in Parallel
Fields are in Series 450 ohms each.

Date	Drawn by	Checked by	Print No.
Sept. 16th 1935	C.H.F.		

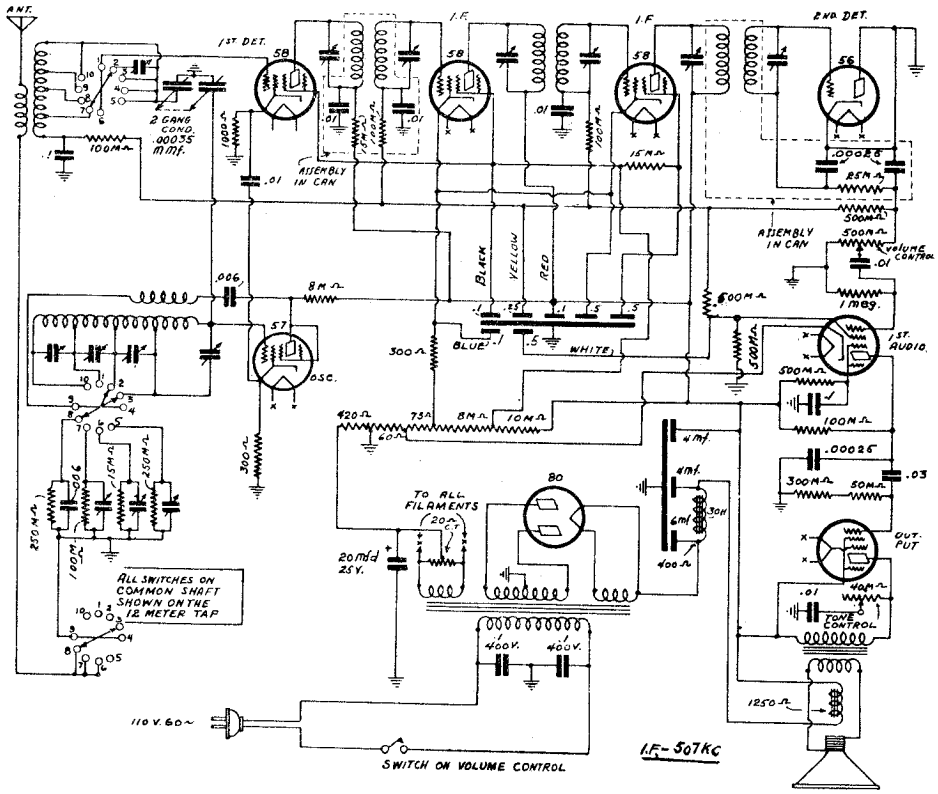

Lafayette Model U-145 A.C.
8 TUBE
DUAL WAVE
SUPER-HET.

Date	Drawn by	Checked by	Print No.
Sept. 16th 1935	C.H.F.		-

©John F. Rider, Publisher

MODEL 480
Schematic

LAFAYETTE RADIO MFG. CO.

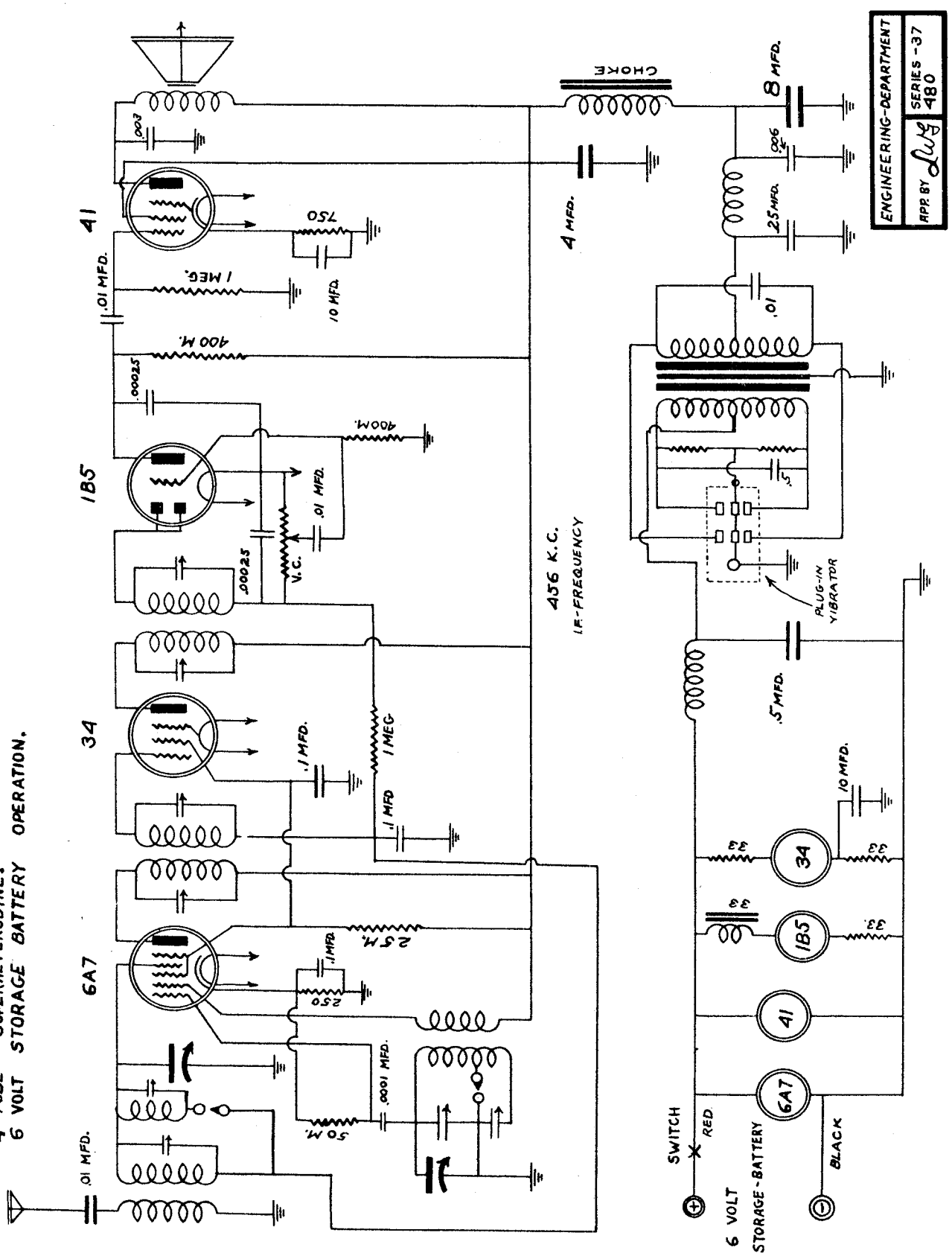

©John F. Rider, Publisher

Schematics, Socket, Trimmers Parts

MAJESTIC RADIO & TELEV. CO

MODELS Charlie McCarthy 1,2
MODEL 42
MODEL 52

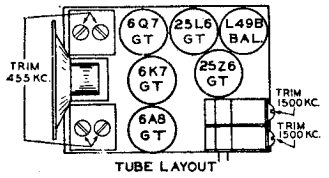

TUBE LAYOUT

CHARLIE MC.CARTHY NO.1

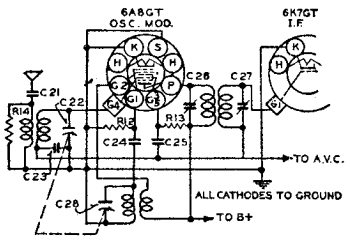

CHARLIE MC.CARTHY NO. 2

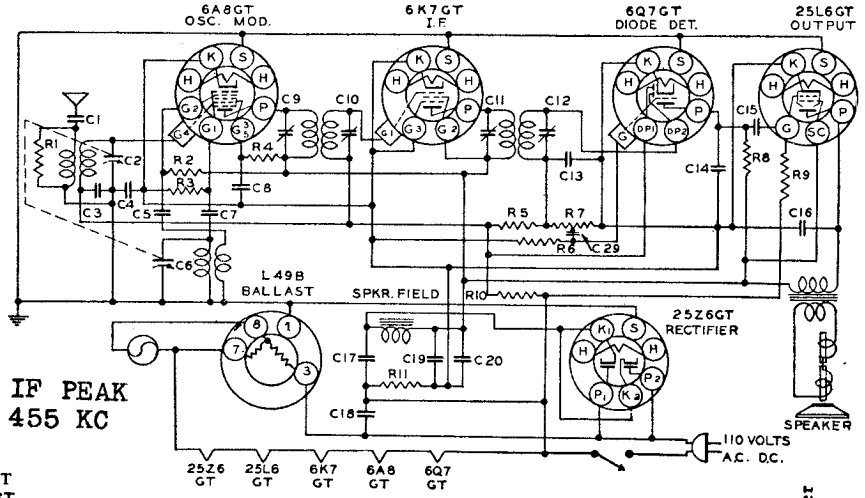

IF PEAK 455 KC

CHARLIE McCARTHY No. 1—PARTS LIST
No. 2—PARTS LIST

Schematic Location	Part No.	Description
C15, C29	C-15754	Tubular cond. .01 mfd. 400 V
C21 C1	C-18	Tubular cond. .01 mfd. 400 V Paper mold case
C23 C3	C-15752	Tubular cond. .05 mfd. 200 V Paper
C20, C25 C8	C-15756 C19	Tubular cond. .05 mfd. 400 V Paper (mold case)
C16, C18	C-23 C22	Tubular cond. .02 mfd. 600 V Paper (mold case)
C24 C7	CM-15929	Mica cond. 50 mmf 20%
C13	CM-15928	Mica cond. 250 mmf 20%
C14	CM-15918	Mica cond. 100 mmf 20%
C17	CE-42 C8 39	Electro. cond. 40 mfd. 200 V
C19	CE-41 C6 40	Electro. cond. 16 mfd. 150 V
C26, 27, C9, C10	Y-CT-18	Trimmer cond. 1st I.F.
C11, 12	Y-CT-18	Trimmer cond. 2nd I.F.
C22, 28 C2, C6	Y-CV-18	2 Variable gang condenser
R11	R67	Wire wound resistor 100 ohms 1W 10%
R12, R3	R54	Carbon resistor 50K ¼ W 20%
R13, R4	R53	Carbon resistor 15K ¼ W 20%
R8	R-51	Carbon resistor 500K ¼ W 20%
R9	R-52	Carbon resistor 400K ¼ W 20%
R5	R-55	Carbon resistor 2 meg ¼ W 20%
R10	R-50	Carbon resistor 5 meg ¼ W 20%
R6	R 49	Carbon resistor 15 meg ¼ W 20%
R14, R1	R 65	Carbon resistor 10 K ¼ W 20%
R7	Y-VC-15	Volume control .5 meg.
R2	R-68	Carbon Res. 7500 Ohms ¼ W 20%
C4	C20	Tubular cond. .25 mfd. 600 V Paper mold case
C5	C21	Tubular cond. .005 mfd. 400 V Paper mold case
C18	C24	Tubular cond. .1 mfd. 300 V Paper mold case

PARTS FOR MAJESTIC MODEL 52

Schematic Location	Part No.	Description
C2, C3	Y-CV-14	Variable gang condenser
C7, C18	C-15761	Tubular cond. .1 mfd. 200 V
C4	C-15752	Tubular cond. .05 mfd. 200 V
C9, C1	C-15754	Tubular cond. .01 mfd. 400 V
C15	C-15757	Tubular cond. .1 mfd. 400 V
C11	C-15772	Tubular cond. .02 mfd. 400 V
C14	C-15754	Tubular cond. .01 mfd. 400 V
C16	CE-32	Tubular dry elec. cond. 40 mfd.
C17	CE-35	Tubular dry elec. cond. 16 mfd.
C5, C6	Y-CT-16	Trimmer cond. 1st I.F.
C8, C19	Y-CT-17	Trimmer cond. 2nd I.F.
C10, C13	CM-15928	Mica cond. 250 mmf 20%
C12	CM-15919	Mica cond. 50 mmf 20%
R1	R-54	Carbon resistor 50K ¼ W 20%
R2	R-53	Carbon resistor 15K ¼ W 20%
R3	R-55	Carbon resistor 2 meg ¼ W 20%
R5	R-49	Carbon resistor 15 meg ¼ W 20%
R6	R-50	Carbon resistor 5 meg ¼ W 20%
R7	R-51	Carbon resistor 500K ¼ W 20%
R8	R-52	Carbon resistor 300K ¼ W 20%
R11	R-56	Carbon resistor 100 ohms ½ W 10%
R10	R-57	Wire wound flex. resistor 40 ohms
R9	LC-8	141 ohms in line cord
R4	Y-VC-15	.5 meg volume control

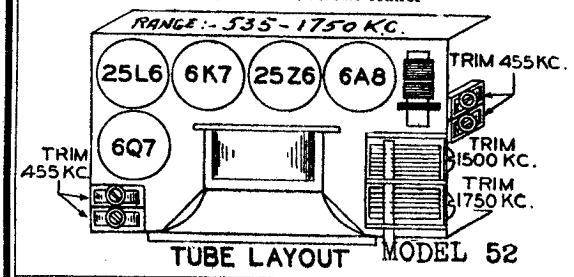

TUBE LAYOUT MODEL 52

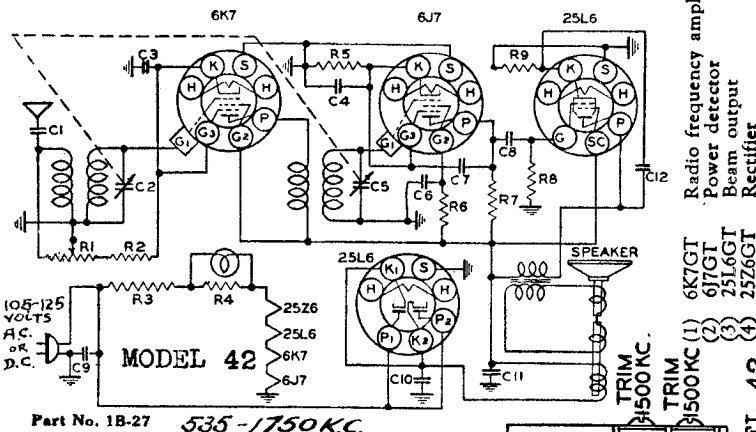

Part No. 1B-27 535-1750 KC.

Radio frequency amplifier
Power detector
Beam output
Rectifier
6K7GT
6J7GT
25L6GT
25Z6GT
(1)
(2)
(3)
(4)

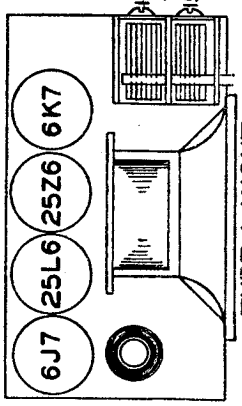

PARTS FOR MAJESTIC MODEL 42

Schematic Location	Part No.	Description
C2, C5	Y-CV-15	Variable gang condenser
C1, C8, C12	C-15760	Tubular cond. .01 mfd. 400 V
C3, C6	C-15761	Tubular cond. .1 mfd. 200 V
C4	C-15751	Tubular cond. .25 mfd. 200 V
C9	C-15757	Tubular cond. .1 mfd. 400 V
C10, C11	CE-32	Tubular dry elec. cond. 16 mfd. 150 W.V.
C7	CM-15918	Mica cond. 100 mmf 20%
R1	Y-VC-16	Volume control 50,000 ohms
R2		500 ohms in volume control
R3	LC-9	162 ohms in line cord
R4	R-57	Wire wound flex. resistor 40 ohms
R5	R-60	Carbon resistor 25 K ¼ W 20%
R6	R-58	Carbon resistor 3 meg ¼ W 20%
R7	R-43	Carbon resistor 1 meg ¼ W 20%
R8	R-51	Carbon resistor 500 K ¼ W 20%
R9	R-59	Carbon resistor 110 ohms ½ W 10%

IF PEAK 455 KC

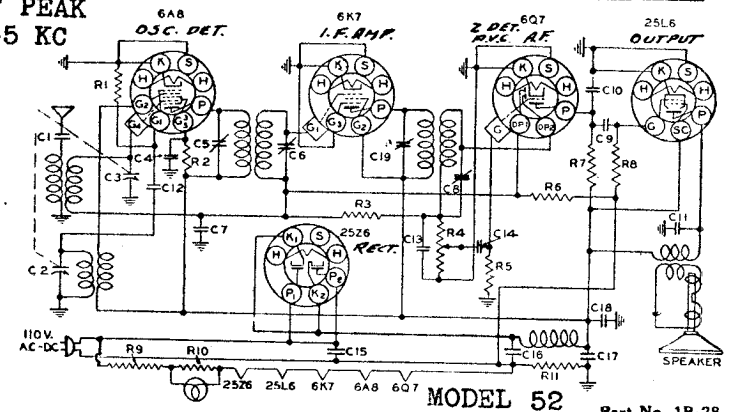

Part No. 1B-28

©John F. Rider, Publisher

MODEL 62A
Schematic, Socket
Tuner, Parts

MAJESTIC RADIO & TELEV. CO.

SCHEMATIC DIAGRAM MODEL 62A

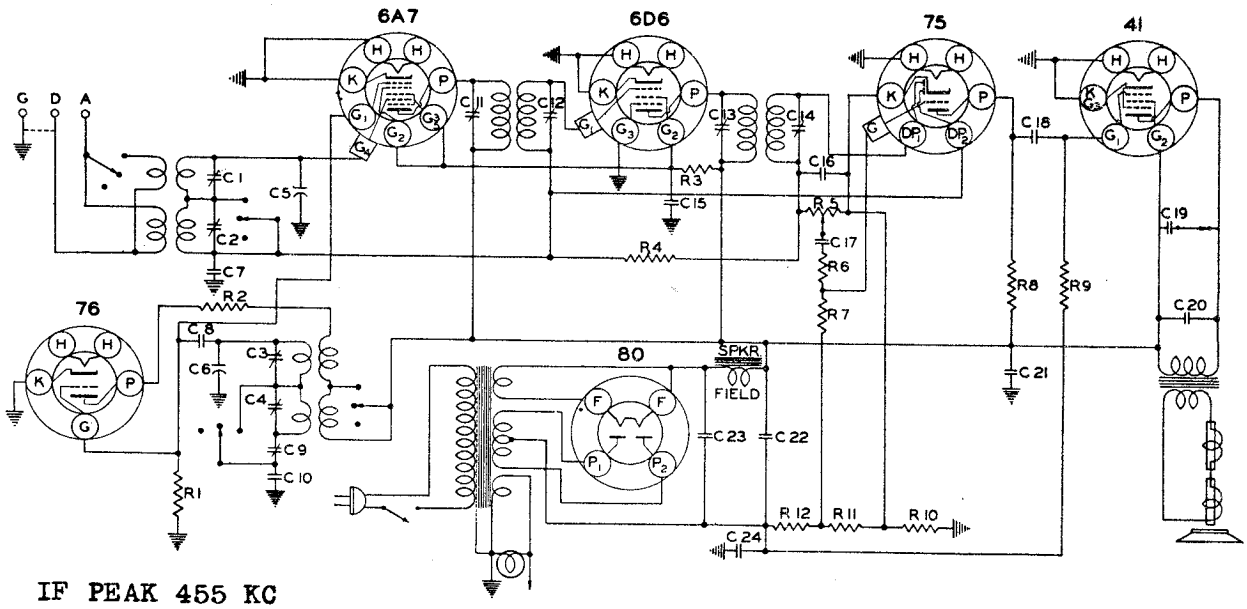

IF PEAK 455 KC

MODEL 62A

This receiver operates on alternating current of 110 volts 60 cycles. Where only 50 cycles current is available, the receiver can be altered for that frequency at the factory. It is a 6 tube superheterodyne. Its frequency ranges are 538 to 1750 KC'S and 5.8 to 18.6 megacycles. This includes standard American broadcast, most city police, foreign and American short wave broadcast. The receiver is equipped with automatic volume control and mechanical push button tuning.

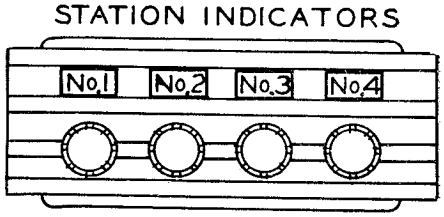

FIG. 1

The tubes used are:

1-6A7	First detector
1-76	Oscillator
1-6D6	I. F. Amplifier
1-75	Second detector, automatic volume control, and first audio amplifier
1-41	Output
1-80	Rectifier

REPLACEMENTS PARTS LIST — MODEL 62A

Schematic Location	Part No.	Description
R1	R-15511	50K ½W 20%
R2	R-15601	100 ½W 20%
R3	R-69	7.5K 2W ½W 20%
R4	R-15500	2 Meg. ½W 20%
R5	Y-VC-18	Volume control 1 meg
R6, R8	R-15512	250K ½W 20%
R7		1 Meg.
R9	R-15520	500K ½W 20%
R10	61 Ohms	E-C-6 Candohm
R11	33 Ohms	E-C-6 Candohm
R12	150 Ohms	E-C-6 Candohm
C1, C2	Y-CP-2	Trimmer cond.
C3, C4	Y-CP-2	Trimmer cond.
C5, C6	Y-CV-19	Variable gang cond.
C7	C-15752	Tubular cond. .05 mfd. 200 V
C8	CM-15929	Mica cond. 50 mmf 20%
C9	C-16472	Padder cond.
C10	CM-17	Mica cond. 4330
C11, C12	Y-CT-1	Trimmer cond.
C13, C14	Y-CT-1	Trimmer cond.
C15, C21	C15756	Tubular cond. .05 mfd. 400 V
C16	CM-15928	Mica cond. 250 mmf 20%
C17, C18, C19	C-15754	Tubular cond. .01 mfd. 400 V
C20	C-15759	Tubular cond. .006 mfd. 400 V
C22	CE-43	8-300 V
C23	CE-43	12-300 V
C24	CE-43	20-25 V

Operations For Setting Up Of Buttons

(1) Decide which station you desire to hear on any one button.
(2) Loosen this button by turning it to the left.
(3) Tune in your desired station manually until it is heard with best quality.
(4) Push in the button while holding the manual tuning knob fixed on the station.
(5) Tighten the button by turning it to the right while the button is pushed all the way in.
(6) Repeat this procedure to set up the other buttons.

To change any one setting at any time repeat the above procedure.
After the push buttons are adjusted to your desired station, cut out the proper station call letters from the enclosed station call letter sheet, and snap them into the rectangular opening above the push button by bending them slightly between two fingers and allowing them to snap into the proper opening. These openings are shown in Fig. 1 as No. 1, No. 2, No. 3 and No. 4.

CAUTION

Push button should be used in the same position of the tone control in which they were adjusted. Thus, if the buttons were set up in the mellow tone position of the tone control, they should be used in that position. If this is not done, turning the tone control may detune the set slightly at frequencies higher than 1200 kilocycles.

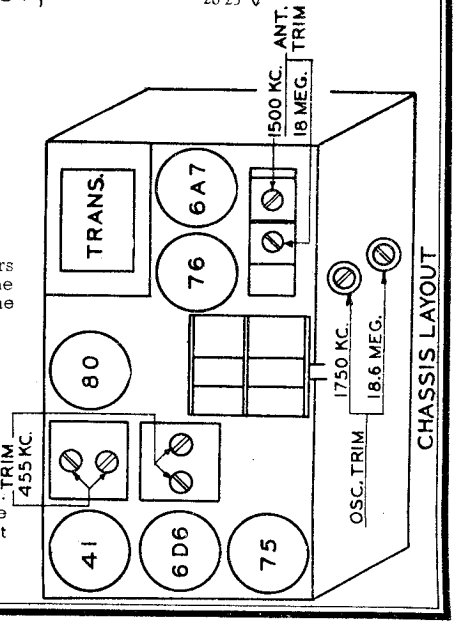

©John F. Rider, Publisher

MODELS 511,511A,519P
MODEL 551
Schematics,Socket
Trimmers,Parts

MAJESTIC RADIO & TELEV. CO.

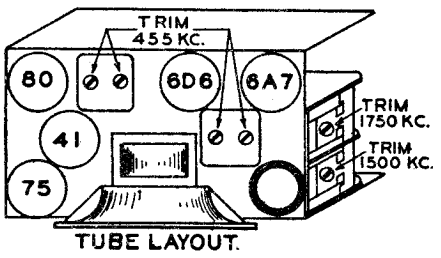

TUBE LAYOUT.

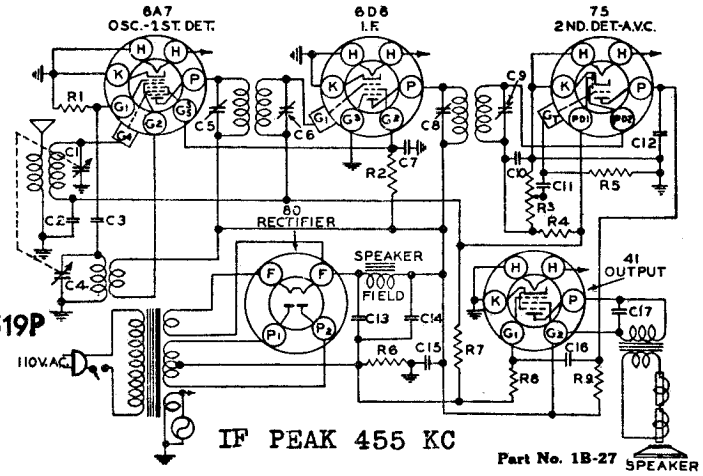

IF PEAK 455 KC

Part No. 1B-27 SPEAKER

Models 511-511A-519P

PARTS FOR MAJESTIC MODEL 511

Location	Part No.	Description
C1, C4	Y-CV-17	Variable gang condenser
C2	C-15752	Tubular cond. .1 mfd. 200 V
C7, C15	C-11756	Tubular cond. .05 mfd. 400 V
C11, C16	C-15754	Tubular cond. .1 mfd. 400 V
C17	C-15769	Tubular cond. .01 mfd. 600 V
C3	CM-15929	Mica cond. 50 mmf 20%
C10	CM-15918	Mica cond. 100 mmf 20%
C12	CM-15928	Mica cond. 250 mmf 20%
C13, C14	CE-34	Tubular dry elec. cond. 8 mfd. 300 V
C5, C6	Y-CT-1	1st I.F. Trimmer cond.
C8, C9	Y-CT-1	2nd I.F. Trimmer cond.
R1	R-15511	Carbon resistor 50K ¼W 20%
R2	R-15544	Carbon resistor 15K ¼W 20%
R4	R-15500	Carbon resistor 2 meg ¼W 20%
R5	R-64	Carbon resistor 15 meg ¼W 20%
R6	R-62	Carbon resistor 300 ohms ½W 10%
R7	R-63	Carbon resistor 10 meg ¼W 20%
R8	R-15528	Carbon resistor 400K ¼W 20%
R9	R-15520	Carbon resistor 500K ¼W 20%
R3	Y-VC-17	Volume control 500K

This receiver operates on alternating current of 105 to 125 Volts—60 cycles. It is also available in 50 cycles. It is a full 5 tube superheterodyne equipped with automatic volume control. Tuning range 538-1750 KC'S. This includes Standard Broadcast and City Police.

The tubes used are:

1—6A7 Converter tube
1—6D6 I F. Amplifier
1— 75 Second detector, automatic volume control and audio amplifier
1— 41 Power output tube
1— 80 Rectifier

PHONOGRAPH COMBINATION: To operate on radio, throw switch on motor board to "radio" position. To operate phonograph, throw switch to "phono" position and start motor.

TO SET AUTOMATIC STOP ON PHONOGRAPH SWITCH: Place pick-up arm so that needle is in record groove near the end of the recording, then fold upright arm on switch toward pick-up arm so that further movement of pick-up toward center of record will throw switch to shut off motor.

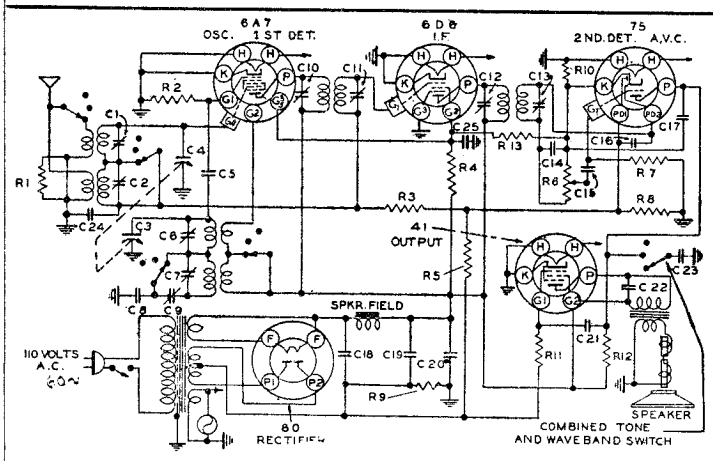

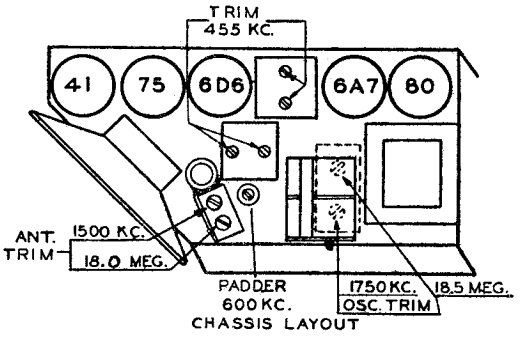

IF PEAK 455 KC **Model 551**

PARTS LIST — CHASSIS 1551

Schematic Location	Part No.	Description
C5,C21, C22,C23	C-15754	Tubular cond. .01 mfd. 400 V
C20,C25	C-15756	Tubular cond. .05 mfd. 400 V
C24	C-15752	Tubular cond. .05 mfd. 200 V
C17	C-15774	Tubular cond. .02 mfd. 400 V
C5,C16	CM-15929	Mica cond. 50 mmf 20%
C14	CM-15918	Mica cond. 100 mmf 20%
C8	CM-8	Mica cond. 4330 mmf 5%
C18,C19	CE-38	Tubular dry elec. cond. 8 mfd. 300 V
C1, C2	Y-CP-2	Ant Trimmer cond.
C6, C7	Y-CP-2	Osc. Trimmer cond.
C10,C11	Y-CT-1	Trimmer cond. 1st I.F.
C12,C13	Y-CT-1	Trimmer cond. 2nd I.F.
C3, C4	Y-CV-16	Variable gang condenser
C9	Y-CP-16472	Padder cond.

This receiver operates on an alternating current of 60 cycles, 105 to 125 volts. Where only 50 cycles is available, it can be altered at the factory by so specifying. It is a 5 tube superheterodyne. Its frequency ranges are 538 to 1750 KC's and 5.8 to 18.6 megacycles.

Schematic Location	Part No.	Description
R1	R-15531	Carbon resistor 10K ¼W 20%
R2	R-15511	Carbon resistor 50K ¼W 20%
R3, R7, R8	R-15517	Carbon resistor 1 meg ¼W 20%
R4	R-15544	Carbon resistor 15K 1W 20%
R5	R-15559	Carbon resistor 3 meg ¼W 20%
R9	R-62	Carbon resistor 300 ohms ½W 10%
R10, R11	R-15528	Carbon resistor 400K ¼W 10%
R12	R-15588	Carbon resistor 250K ¼W 20%
R6	Y-VC-11	Volume control 1 meg

The tubes used are:

1-6A7 First detector and oscillator
1-6D6 I. F. Amplifier
1-75 Second detector, automatic vol cont and first audio amplifier
1-41 Output
1-80 Rectifier

©John F. Rider, Publisher

MODELS 639,639B
Schematic,Socket
Trimmers,Parts,Tuner

MAJESTIC RADIO & TELEV. CO.

MODEL 739
Tuner

SCHEMATIC DIAGRAM MODELS 639 and 639B

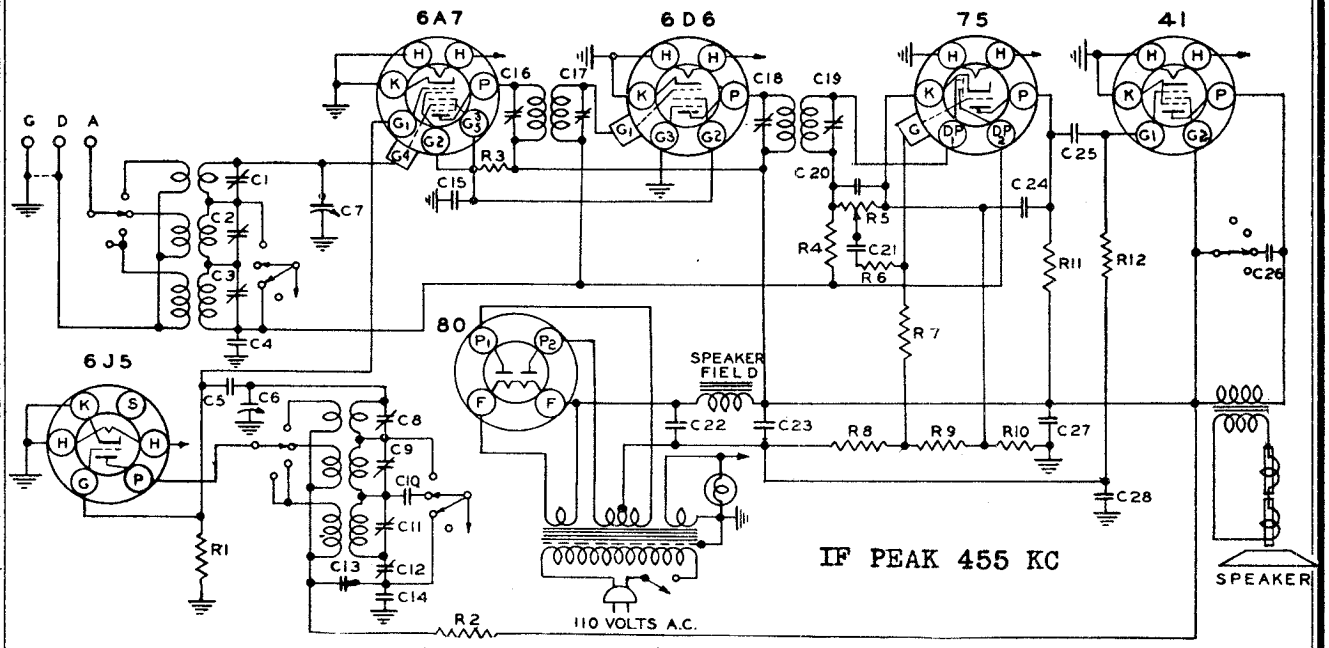

REPLACEMENTS PARTS LIST — MODEL 639

Schematic Location	Part No.	Description
C5	CM-15929	Mica cond. 50 mmf. 20%
C20	CM-15928	Mica cond. 250 mmf. 20%
C10	CM-1	Mica cond. 2550 mmf 5%
C14	CM-17	Mica cond. 4330 mmf 3%
C24	CM-15918	Mica cond. 100 mmf 20%
C12	CP-16472	Osc. Padder condenser
C4	C-15752	Tubular cond. .05 mfd. 200 V
C15, C27	C-15756	Tubular cond. .05 mfd. 400 V
C13, C21, C25, C26	C-15754	Tubular cond. .01 mfd. 400 V
C29	C-15759	Tubular cond. .006 mfd. 400 V
C22, C23, C28	Y-CE-43	Cond. elec. 12 8 mfd. 300 V 20 mfd. 25V
C6, C7	Y-CV-19	Variable gang condenser
C8, C9, C11	Y-CP-1	Trimmer cond. osc.
C1, C2, C3	Y-CP-1	Trimmer cond. ant.
C16, C17	Y-CT-1	Trimmer cond. 1st I.F.
C18, C19	Y-CT-1	Trimmer cond. 2nd I.F.

Schematic Location	Part No.	Description
R2	R-2	Carbon resistor 5K ¼W 20%
R1	R-15531	Carbon resistor 50K ¼W 20%
R3	R-69	Carbon resistor 7.5K 2W 2%
R6, R11	R-15512	Carbon resistor 250K ¼ W 20%
R7	R-15517	Carbon resistor 1 meg ¼W 20%
R12	R-15520	Carbon resistor 5 00K ¼W 20%
R4	R-15500	Carbon resistor 2 meg ¼W 20%
R8, R9, R10	RC16	Candohm resistor
R5	Y-VC-19	Volume control

The tubes used are:

1-6A7	First detector
1-6J5	Oscillator
1-6D6	I. F. Amplifier
1-75	Second detector, automatic volume control, and first audio amplifier
1-41	Power Output
1-80	Rectifier

MODELS 639 and 639B and 739

Model 639 operates on 110 volts 60 cycles. Model 639B operates on 110 volts, 50 or 60 cycles. Both receivers are 6 tube superheterodyne; the frequency ranges are 538 to 1750 KC; 1.75 to 5.8 MC; 5.8 to 18.6 MC. This includes standard American broadcast, police and airplane, foreign and American short wave broadcasts. The receiver is equipped with automatic volume control and mechanical push button tuning and phonagraph jacks.

STATION INDICATORS

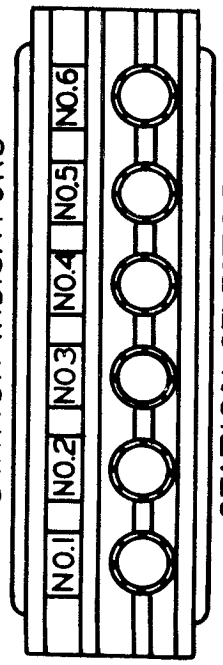

STATION SELECTORS

Operations For Setting Up Of Buttons

(1) Decide which station you desire to hear on any one button.
(2) Loosen this button by turning it to the left.
(3) Tune in your desired station manually until it is heard with best quality.
(4) Push in the button while holding the manual tuning knob fixed on the station.
(5) Tighten the button by turning it to the right while the button is pushed all the way in.
(6) Repeat this procedure to set up the other buttons.

To change any one setting at any time repeat the above procedure. To get your station, push the desired button until it has reached the end of its travel

After the push buttons are adjusted to your desired station, cut out the proper station call letters from the enclosed station call letter sheet, and snap them into the rectangular opening above the push button by bending them slightly between two fingers and allowing them to snap into the proper opening.

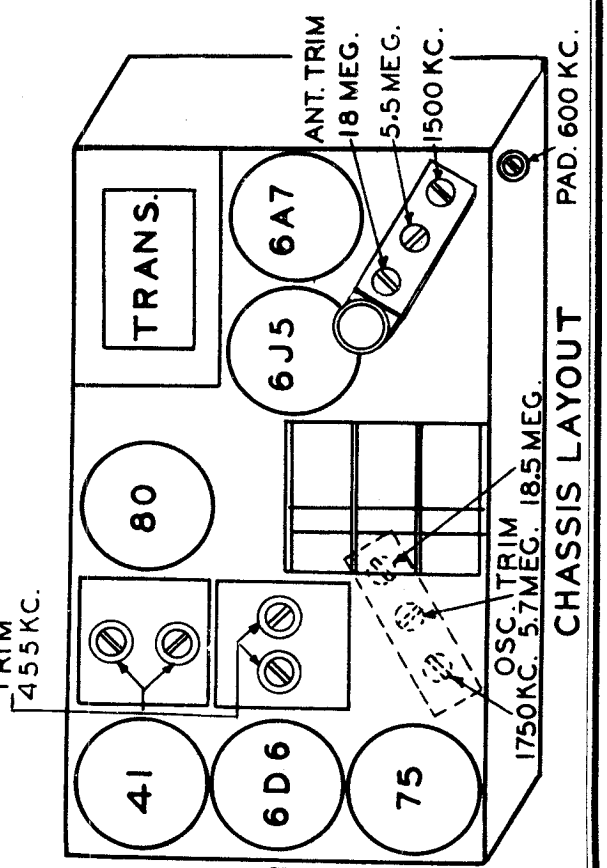

©John F. Rider, Publisher

MAJESTIC RADIO & TELEV. CO.

MODEL 739
Schematic, Socket
Trimmers, Parts,
Voltage

SCHEMATIC DIAGRAM MODEL 739

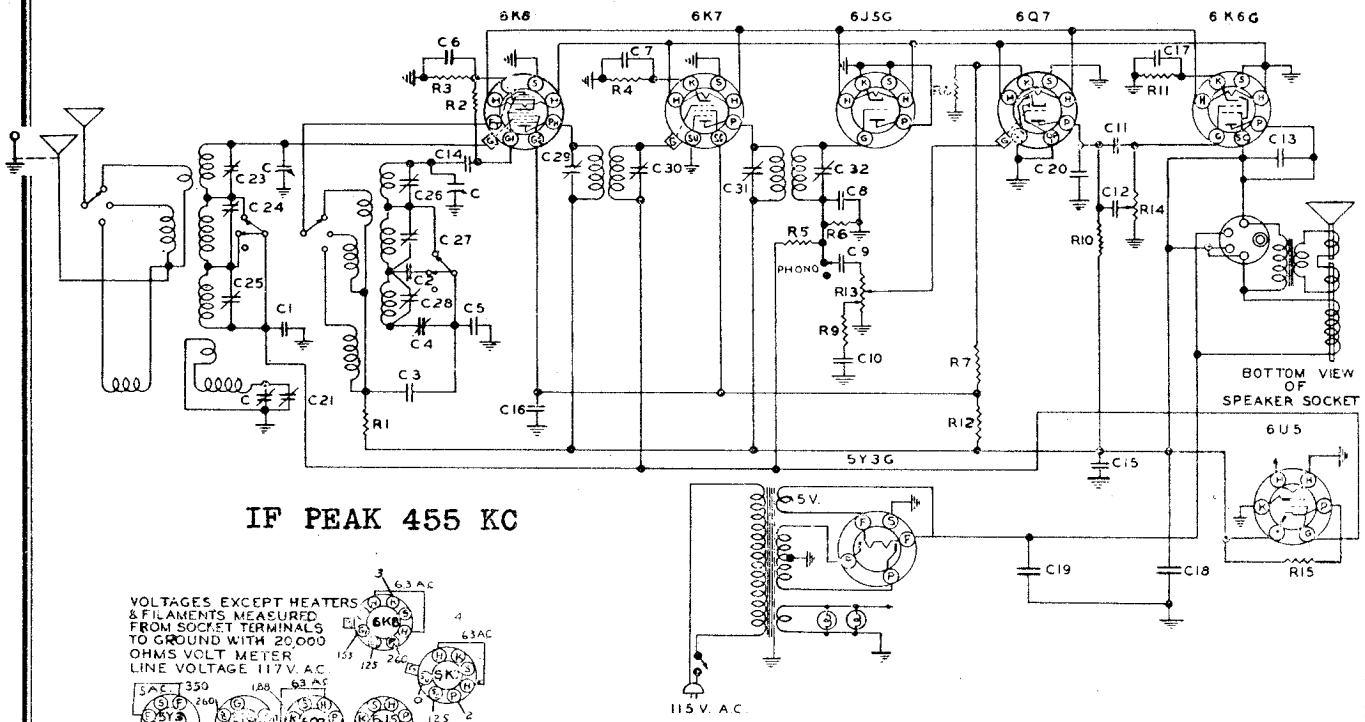

IF PEAK 455 KC

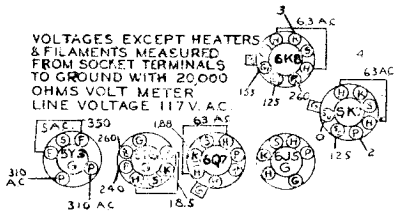

REPLACEMENTS PARTS LIST — MODEL 739

Schematic Location	Part No.	Description
C2	CM-1	Mica cond. 2550 mmf. 5%
C3	Y-CV-20	Variable gang condenser
C4	Y-CP-16472	Osc. Padder condenser
C17, C18, C19	CE-7	Electrolytic cond.
C21	Y-CP-16424	Trimmer cond.
C23, C24, C25	Y-CP-1	Trimmer cond. ant.
C26, C27, C28	Y-CP-1	Trimmer cond. osc.
C29, C30	Y-CT-2	Trimmer cond. 1st I.F.
C31, C32	Y-CT-2	Trimmer cond. 2nd I.F.
R12	R-14	Carbon resistor 10K 2W 20%
R3	R-15589	Carbon res. 220ohms ¼ W 10%
R4	R-15537	Carbon res. 400ohms ¼ W 10%
C3, C10	C-15754	Tubular cond. .01 mfd. 400 V
C1, C7	C-15761	Tubular cond. .1 mfd. 200 V
C6	C-15752	Tubular cond. .05 mfd. 200 V
C9, C11	C-15760	Tubular cond. .02 mfd. 400 V
C12	C-15759	Tubular cond. .006 mfd. 600 V
C13	C-15753	Tubular cond. .002 mfd. 600V
C15	C-15750	Tubular cond. .25 mfd 400
C16	C-15756	Tubular cond. .05 mfd. 400V
C8	CM-15928	Mica cond. 250 mmf. 20%
C20	CM-15918	Mica cond. 100 mmf. 20%
C14	CM-15929	Mica cond. 50 mmf 20%
5	CM-2	Mica cond. 4330 mmf. 5%
R2, R9	R-15511	Carbon resistor 50K ¼ W 20%
R5	R-15517	Carbon resistor 1 meg ¼ W 20%
R6	R-15520	Carbon resistor 5 00K ¼ W 20%
R8	R-15551	Carbon res. 250ohms ¼ W 10%
R10	R-15504	Carbon resistor 150 K ¼ W 20%
R11	R-37	Carbon res. 600ohms ½ W 20%
R1	R-15529	Carbon resistor 25K ¼ W 20%
R7	R-15586	Carbon resistor 15K 1W 10%
R15		1 meg resistor in 6U5 socket
R13	Y-VC-6	Volume control
R14	Y-TC-1	Tone control

This receiver operates on alternating currents of 105 to 125 volt, 50-60 cycle. Its frequency range is 538 to 1750 KC; 2.1 to 7½ MEG; 7 MEG to 23 MEG.

FOR Operations For Setting Up Of Buttons - SEE MODEL 639

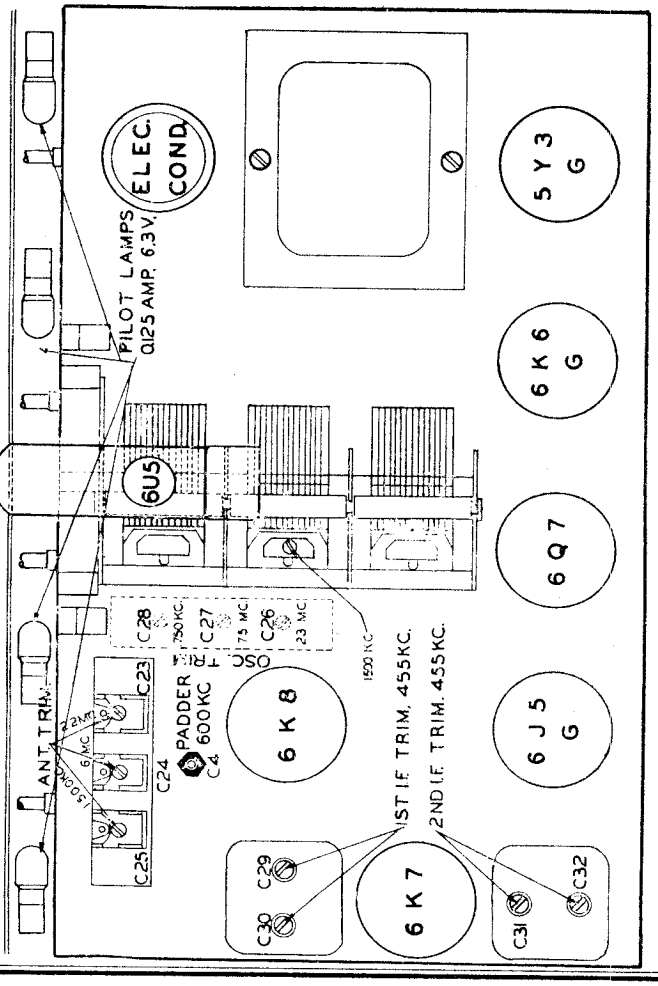

©John F. Rider, Publisher

©John F. Rider, Publisher

ALIGNMENT PROCEDURE MODEL 739

Correct alignment is extremely important. The receiver is properly aligned at the factory and should not be disturbed unless it is absolutely necessary. The procedure is as follows: Turn wave change switch to broadcast position (full counter clockwise) and rotate variable condenser until it is about 50% engaged. Apply a 455 KC signal to the grid of 6K8 mixer tube through a tubular condenser on the order of .1MFD. Referring to chassis layout, adjust C30, C29, C31, and C32 for maximum signal using of course, some sort of indicating device such as an AC volt meter or output meter across the voice coil of the speaker. It may be necessary to apply a very strong signal to "find" the signal until alignment is approached. It is advisable to maintain as low a signal input as conveniently possible in order to minimize the possibility of misalignment resulting from A.V.C. and overload effects. If a squeal is heard while tuning, rotate the gang condenser slightly and it should disappear. Naturally, the ground side of the generator should be connected to the chassis either directly or through the .1MFD condenser.

SHORT WAVE BAND

Rotate the wave band switch to full clockwise position. Connect high side of generator output to antenna lead through a 400 ohm dummy antenna. Completely disengage variable condensers. Apply 23 MEG. signal. Unscrew trimmer C26 to a minimum capacity, slowly turn the screw so that the trimmer capacity increases until the signal is heard. Apply 22 MEG. signal, rotate gang condenser until this signal is heard. Adjust C23 for maximum response. It may be found advisable to "rock" generator frequency back and forth through signal to offset detuning effect from inter action input and oscillator circuits at high frequencies. Check alignment through medium of sensitivity at 11 meg. and 9 meg. respectively. When aligning at 22 meg., it is well to point out here that the trimmer C23 may indicate two maxima. The maxima obtained with the trimmer tighter is the desired one. This can be checked by leaving the gang condenser set and shifting the generator to a higher frequency viz.: 23 megacycles, where the image should appear. If it is properly aligned, it should require about 10 times the signal voltage for the image to give the same output as the real signal.

POLICE BAND

Shift wave band switch to middle position. Apply 7.3 meg. signal. Disengage variable condenser completely. Adjust trimmer C27 in the same manner as previous band until maximum signal is heard. Apply 6 Meg. Signal, rotate gang condenser until same is heard. Adjust trimmer C24 until response is maximum. Check for image in same manner as previous band. Check alignment at 4.5 and 3 megacycles respectively.

BROADCAST BAND

Use a 200 MMF mica condenser for dummy antenna on this band. Shift wave change switch to full counter clockwise position. Adjust trimmer C21 and C25 to medium tight position. Rotate gang until dial pointer indicates 600 KC. Apply 600 KC signal and adjust padder C4 for maximum signal. Disengage gang completely and apply 1750 KC signal; adjust C28 for same. Apply 1500 KC signal and rotate gang until this frequency is found. Adjust trimmers C21 and C25 for maximum response. Shift gang to 600 KC and apply 600 KC signal. "Rock" gang condenser and adjust C4 for maximum signal. Disengage gang and apply 1750 KC signal; if necessary adjust C28 to bring same in.

PHONOGRAPH

To use the phonograph connection, insert the tips of a phonograph pick-up into the phonograph jacks in the back of the chassis. Throw the phono-radio switch to phono. This switch is located near the phono jacks. If the receiver hums, reverse the two phono tips. To use the radio, throw the switch to the radio position.

ALIGNMENT PROCEDURE MODEL 939

Correct alignment is extremely important. The receiver is properly aligned at the factory and should not be disturbed unless it is absolutely necessary. The procedure is as follows: Turn wave change switch to broadcast position (full counter clockwise) and rotate variable condenser until it is about 50% engaged. Apply a 455KC signal to the grid of 6K8 mixer tube through a tubular condenser on the order of .1MFD. Referring to chassis layout, adjust trimmers "Trim 455 KC" for maximum signal using of course, some sort of indicating device such as an AC volt meter or output meter across the voice coil of the speaker. It may be necessary to apply a very strong signal to "find" the signal until alignment is approached. It is advisable to maintain as low a signal input as conveniently possible in order to minimize the possibility of misalignment resulting from A.V.C. and overload effects. If a squeal is heard while tuning, rotate the gang condenser slightly and it should disappear. Naturally, the ground side of the generator should be connected to the chassis either directly or through a .1MFD condenser.

SHORT WAVE BAND

Rotate the wave band switch to full clockwise position. Connect high side of generator output to antenna lead through a 400 ohm dummy antenna. Apply 23 M.C. signal. Unscrew trimmer C33 to a minimum capacity, slowly turn the screw so that the trimmer capacity increases until the signal is heard. Apply 22 M.C. signal, and adjust C24 and C21 for maximum response. It may be found advisable to "rock" generator frequency back and forth through signal to offset detuning effect from inter action input and oscillator circuits at high frequencies. Check alignment through medium of sensitivity at 11 meg. and 9 meg. respectively. When aligning at 22 meg., it is well to point out here that the trimmer C33 may indicate two maxima. The maxima obtained with the trimmer tighter is the desired one. This can be checked by leaving the gang condenser set and shifting the generator to a higher frequency viz.: 23 megacycles, where the image should appear. If it is properly aligned, it should require about 10 times the signal voltage for the image to give the same output as the real signal.

POLICE BAND

Shift wave band switch to middle position. Apply 7.3 M.C. signal. Set dial points to 7.3 M.C. Adjust trimmer C32 in the same manner as previous band until maximum signal is heard. Apply 6 Meg. Signal, and adjust trimmers C25 and C22 until response is maximum. Check for image in same manner as previous band. Check alignment at 4.5 and 3 megacycles respectively.

BROADCAST BAND

Use a 200 MMF mica condenser for dummy antenna on this band. Shift wave change switch to full counter clockwise position. Adjust trimmer C26 and C23 to medium tight position. Rotate gang until dial pointer indicates 600KC. Apply 600KC signal and adjust padder C14 for maximum signal. Set dial to 1500 KC and apply 1500 KC signal; adjust C31 for same. Then adjust trimmers C23 and C26 for maximum response. Shift gang to 600 KC and apply 600 KC signal. "Rock" gang condenser and adjust C14 for maximum signal. Recheck 1500 KC signal.

PHONOGRAPH

To use the phonograph connection, insert the tips of a phonograph pick-up into the phonograph jacks in the back of the chassis. Throw the phono-radio switch to phono. This switch is located near the phono jacks. If the receiver hums, reverse the two phono tips. To use the radio, throw the switch to the radio position.

MAJESTIC RADIO & TELEV. CO.

MODEL 939
Schematic, Socket
Trimmers, Parts, Tuner

SCHEMATIC DIAGRAM MODEL 939

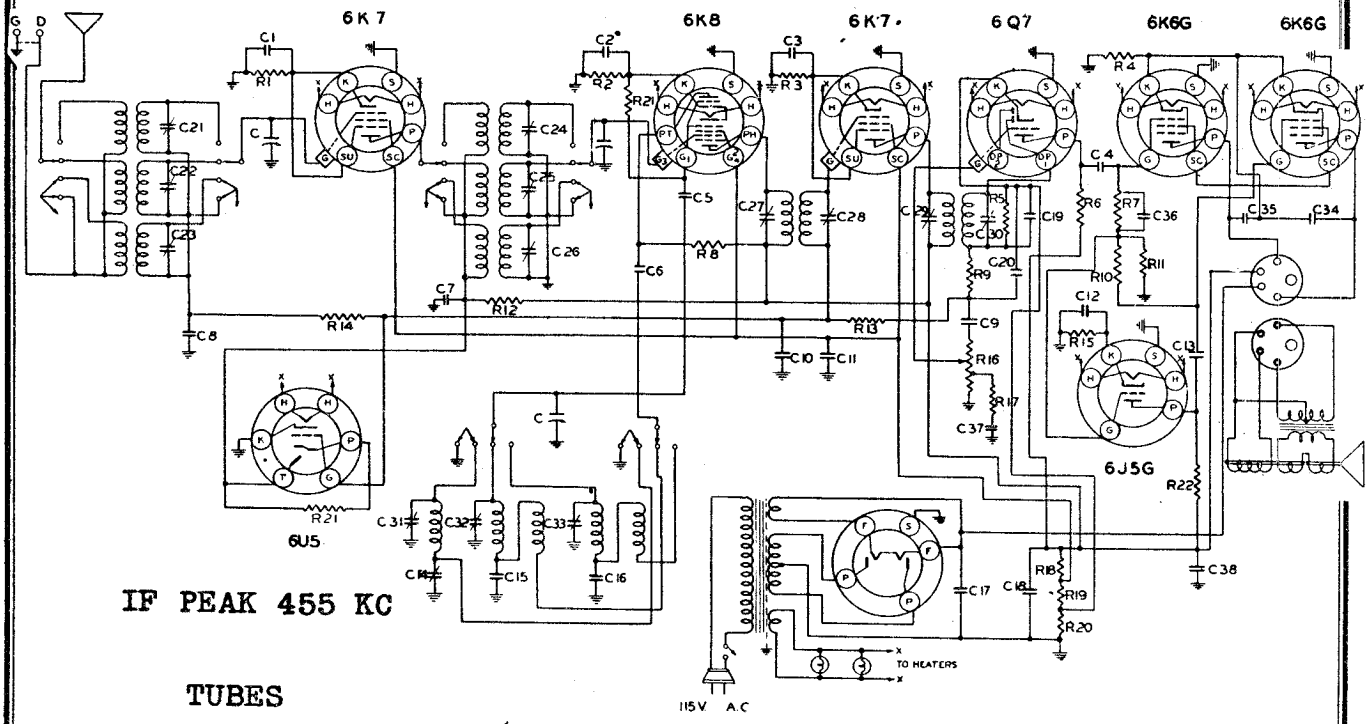

IF PEAK 455 KC

TUBES

6K7 R. F. AMP.
6K8 OSC. MOD.
6K7 I. F. AMP.
6J5G PHASE INVERTER.
6Q7 A.F. AMP., DIODE DET., and A.V.C.
2-6K6G OUTPUT.
5Y3G RECTIFIER.
6U5 ELECTRIC EYE.

PARTS LIST — MODEL 939

Schematic Location	Part No.	Description
R20	R-15508	150 ohms 10% ¼ W
R4	R-15584	250 ohms 10% 1 W
R1	R-15542	1 K ohms 20% ¼ W
R3	R-15564	1.5K ohms 20% ¼ W
R12	R-2	5 K ohms 20% ¼ W
R18	R-70	7.5K ohms 10% 3 W
R19	R-15562	10K ohms 20% 1 W
R15	R-15531	10K ohms 20% ¼ W
R8	R-15501	25K ohms 20% 1 W
R17, R21	R-15511	50K ohms 20% ¼ W
R9, R14	R-15515	100K ohms 20% ¼ W
R6, R11, R22	R-15512	250K ohms 20% ¼ W
R10	R-15549	300K ohms 20% ¼ W
R5	R 15520	500K ohms 20% ¼ W
R13	R 15517	1 Meg ohms 20% ¼ W
R2	R-15581	450 ohms 10% ¼ W
C34, C35	C-15759	.006 mfd. 600V
C37, C4, C13 C9, C36	C-15754	.01 mfd. 400V
C8, C10, C1 C2, C3, C11	C-15761	.1 mfd. 200V
C6	C-15757	.01 mfd. 400V
C7	C-15757	.1 mfd. 400V
C38	C-15750	25 mfd. 400V
C19, C20	CM-15918	100 mmfd.
C5	CM-15929	50 mmfd
C16	CM-9	5500 mmfd.
C15	CM-18	2150 mmfd.

This receiver operates on alternating currents of 105 to 125 volts, 50-60 cycle. Its frequency range is 538 to 1750 KC; 2.1 to 7.3 MEG; 7 MEG to 23 MEG.

FOR Operations For Setting Up Of Buttons SEE MODEL 639

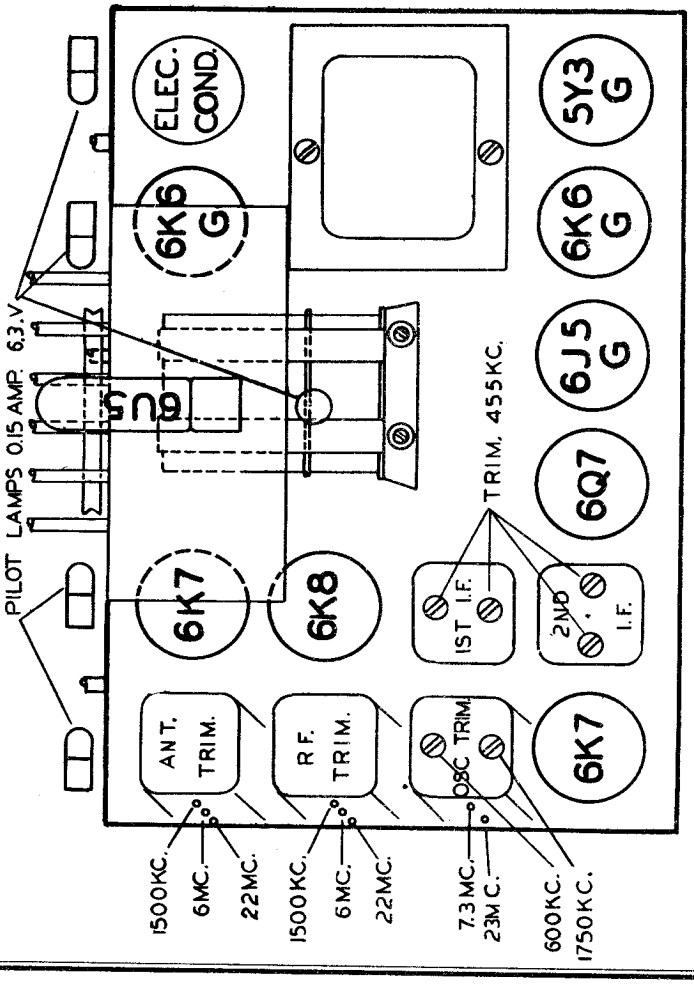

CHASSIS LAYOUT

©John F. Rider, Publisher

MODELS 11056,11058
MODEL 11356
MODEL 11656
Tuned Data

MAJESTIC RADIO & TELEV. CO.

AUTOMATIC ELECTRIC TUNING—MODELS 11056, 11058, 11356, 11656

Push buttons are for use on broadcast reception. The broadcast dial scale reads, from left to right, 1750 to 550 kilocycles. The automatic buttons are similarly disposed in sequence from left to right so that any particular button may be set to a desired station within its range. Two buttons may even be set to the same station if desired. This permits setting to different programs which are very close together on the dial scale. **Do not press two buttons in at one time.** If this is done by mistake, move manual lever to manual tuning as shown by dial light. This releases both buttons.

Pre-setting For Desired Stations

Determine which broadcasting stations you favor for automatic tuning and set the buttons to the programs coming from the ones you regularly listen to. To do this, first turn set on and tune in one program manually, to desired volume. In tuning, observe "electric eye" which shows its narrowest shadow when receiver is correctly tuned. Program should be listened to several minutes after first turning set on in order that the tubes may warm up fully before the automatic buttons are pre-set. For the first push-button at left, begin with a desired station near left of scale, in range 1750 to 1400 kilocycles.

At the rear of cabinet there is a selector disc which has two rings, each carrying contactors corresponding to the push-buttons. Remove protective cover to expose this disc with its rings to view when pre-settings are made. The selector disc comprises two sectors separated by a visible and narrow insulated gap. When the lower gap registers with a particular contactor carried by either of the two rings the push-button connected to that contactor controls the given station setting. Use the contactor which is nearest to the insulated lower gap on disc. Loosen its support screw just enough so that this contactor can slide on its ring support and move the contactor so that its ball point rests on this gap. Then tighten support screw so that this adjustment will be fixed for repeated use. To test accuracy of pre-setting move the front lever to "electric" tuning position as shown by dial light indicator. Press in the first button at left, the one now pre-set. If correct, the selected program will be heard. If not, repeat pre-setting operation just discussed, moving the correct contactor to position at the lower disc gap. Once set, do not move this contactor.

For indexing other stations proceed similarly with the next push button and its corresponding control contactor, and so on, until all desired buttons are pre-set to the particular stations wanted. To change selection at some later time, repeat the procedure for a particular button, but leave the pre-set buttons held securely by support screws before replacing protective cover over rear disc. Exact pre-settings may be had by carefully moving the contactor connected to each push button and slightly shifting its position if required to register with lower disc gap for the desired station. Settings may be made as desired, and if you wish all or more programs in one range, ask for special instructions. It is recommended that the service man who installs your radio set up the stations you want on your push buttons. Mark each push button with proper call letter tab furnished as directed at top of tab sheet. Once pre-set, you may leave lever in electric tuning position for all broadcast tuning, either manually or automatically.

NOTE: For receivers equipped with automatic frequency control. Most exact pre-settings may be made when lever is in manual position without this control. Do not pre-set to a weak station very close on dial scale to a powerful station, as the control will pull in the strong station when too close. Use your manual control for weak distant stations commonly subject to fading in and fading out of volume, as well for short wave reception. Another convenient way to pre-set stations is to first tune manually to a sequence of desired programs and then (for each station) just move the nearest contactor over to fit on the control disc gap. The stations will repeat as pre-set, so place the proper index letters on each button position.

RANGE—MODELS 11056, 11058
A-Band—538-1800 KC
B-Band—1770 KC to 6.0 M. C.
C-Band—5.8 M.C.-18.5 M.C.

POWER SUPPLY—MODELS 11056, 11058, 11356, 11656
This receiver is designed for use on power supplies whose frequencies range from 50-60 cycles and whose voltages range from 105-130 volts AC. It should not be operated from a power line higher than 130 volts AC.

©John F. Rider, Publisher

MAJESTIC RADIO & TELEV. CO.

MODELS 11056,11058
Schematic,Voltage

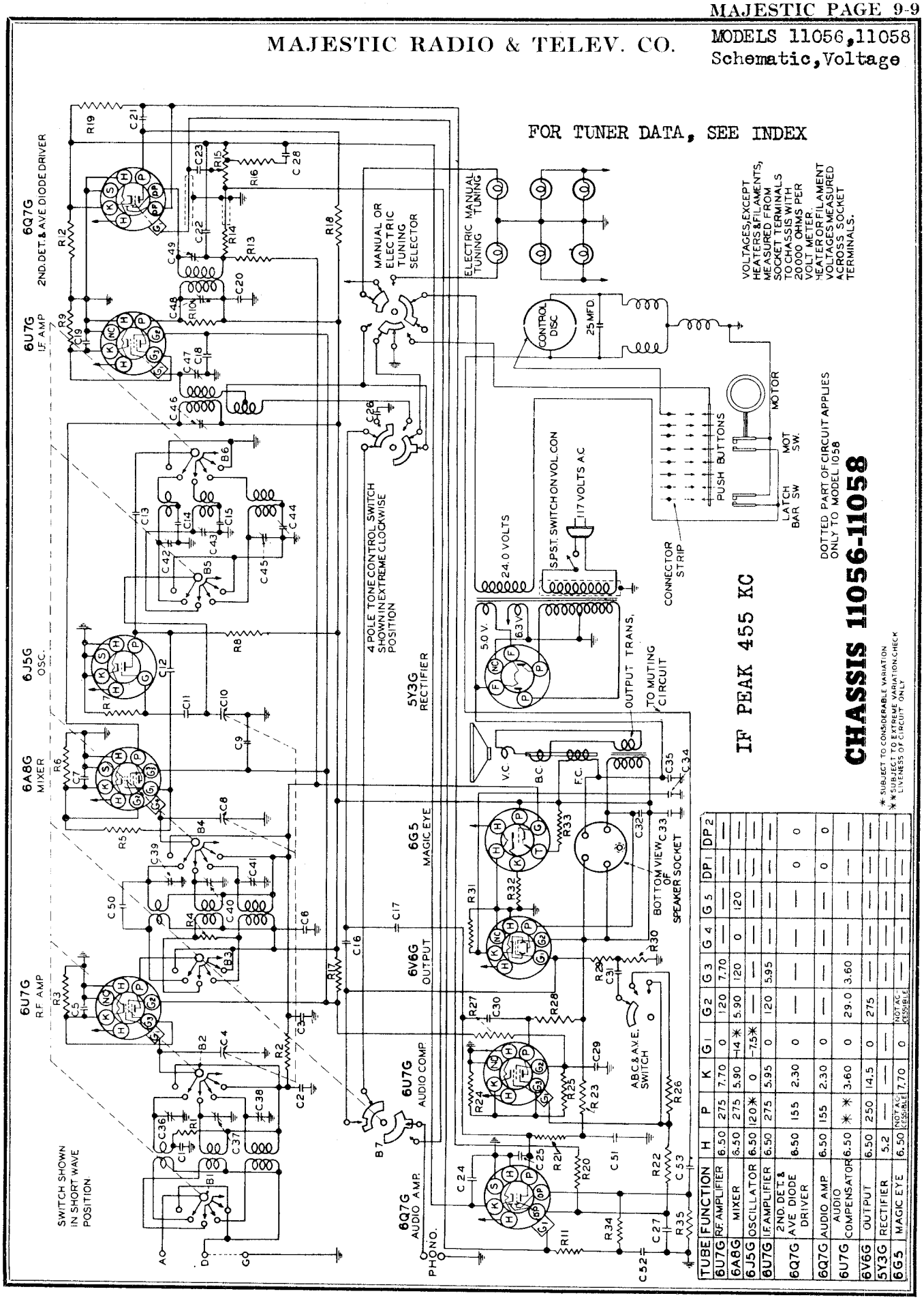

TUBE	FUNCTION	H	P	K	G1	G2	G3	G4	G5	DP1	DP2
6U7G	RF AMPLIFIER	6.50	275	7.70	0	120	7.70	—	—	—	—
6A8G	MIXER	6.50	275	5.90	-14 *	5.90	120	0	120	—	—
6J5G	OSCILLATOR	6.50	120 *	0	-7.5 *	—	—	—	—	—	—
6U7G	I.F. AMPLIFIER	6.50	275	5.95	0	120	5.95	—	—	—	—
6Q7G	2ND. DET. & AVE DIODE DRIVER	6.50	155	2.30	0	—	—	—	—	0	0
6Q7G	AUDIO AMP.	6.50	155	2.30	0	—	—	—	—	0	0
6U7G	AUDIO COMPENSATOR	6.50	*	3.60	0	29.0	3.60	—	—	—	—
6V6G	OUTPUT	6.50	250	14.5	0	275	—	—	—	—	—
5Y3G	RECTIFIER	5.2	—	—	—	—	—	—	—	—	—
6G5	MAGIC EYE	6.50	NOT ACCESSIBLE	7.70	0	NOT ACCESSIBLE	—	—	—	—	—

©John F. Rider, Publisher

MODEL 11056,11058
Socket,Trimmers
Parts,Alignment

MAJESTIC RADIO & TELEV. CO.

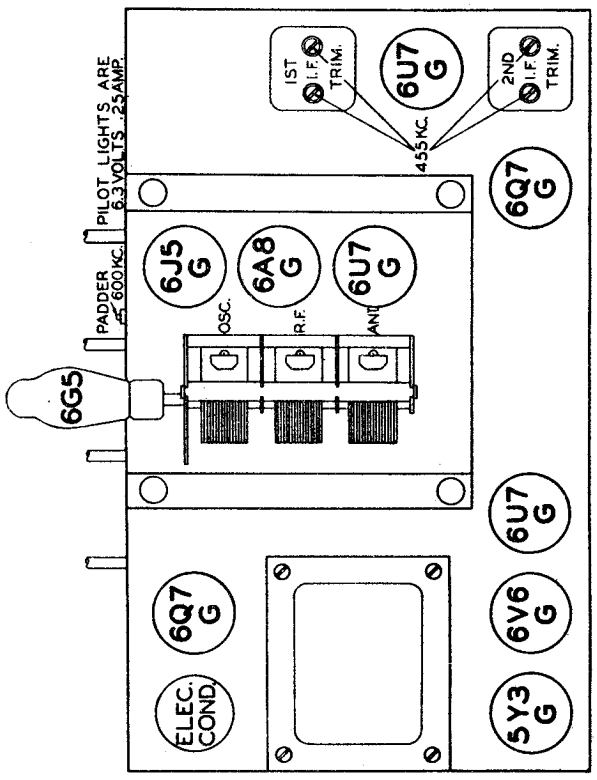

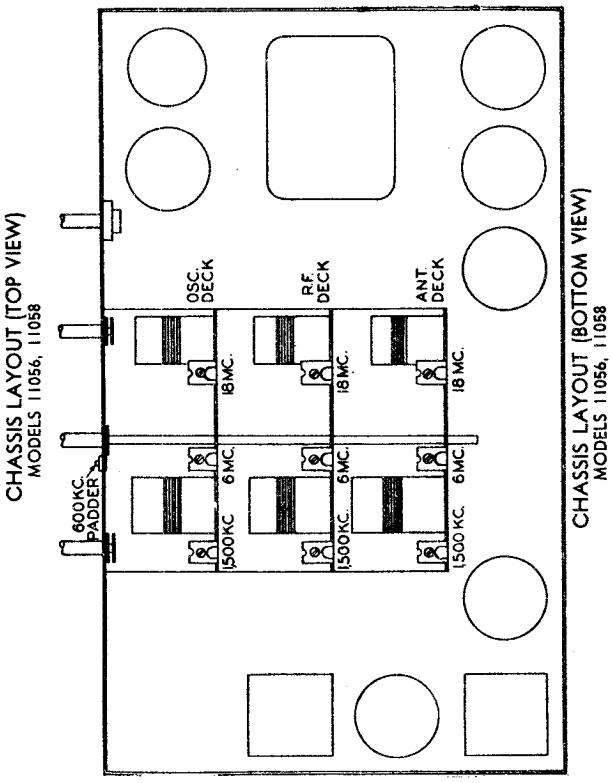

REPLACEMENT PARTS LIST Chassis Nos. 11056, 11058

Schematic Location	Part No.	Description
C4, C8, C10	Y-CV-7	Con. 3 Gang Variable
C1, C13, C6	C-5	Cond. Tub. .01 MFD. 400 V.
C2, C3, C5, C7, C9	C-6	Cond. Tub. .05 MFD. 200 V.
C19, C29, C52	C-15761	Cond. Tub. .1 MFD. 200 V.
C18	C-15757	Cond. Tub. .1 MFD. 400 V.
C21, C23, C31	C-15754	Cond. Tub. .01 MFD. 400 V.
C26, C30, C32	C-15759	Cond. Tub. .006 MFD. 600 V.
C51, C20	C-15750	Cond. Tub. .25 MFD. 400 V.
C-27	C-15751	
C28	C-15772	Cond. Tub. .02 MFD. 200 V.
C53	C-15752	Cond. Tub. .05 MFD. 200 V.
C17	C-15756	Cond. Tub. .05 MFD. 400 V.
C12	CM-7	Cond. Mica 250 MMF. 5%
C11	CM-15919	Cond. Mica 50 MMF. 10%
C14	CM-5	Cond. Mica 2830 MMF. 5%
C15	CM-6	Cond. Mica 1350 MMF. 5%
C16	CM-15939	Cond. Mica 1000 MMF. 20%
C22, C25	CM-15906	Cond. Mica 100 MMF. 10%
C50	CM-10	Cond. Mica 10 MMF. 5%
C24	CE-25	Con. Dry Elec. 10 MFD. 25 V.
C33, C34, C35	Y-CE-10	Cond. Tub. {16 MFD. 400 V. / 10 MFD. 25 V.} Dry Elec. {16 MFD. 400 V}
C44	Y-CT-4	Cond. Padder 440 MMF.
C36, C37, C38 / C39, C40, C41 / C42, C43, C45	Y-CT-3	Cond. Trimmer 3-30 MMF.
C46, C47	Y-CT-2	Cond. 1st I. F. Trimmers
C48, C49	Y-CT-2	Cond. 2nd I. F. Trimmers
R15	Y-CV-5	Vol. Control 500,000 Ohms
R4	R-15530	Resistor Carbon 2500 Ohms ¼ W. 10
R27	R-15513	Resis. Car. 20 M. ½ W. 20%
R6	R-15571	Resistor Carbon 500 Ohms ¼ W. 10%
R3	R-15543	Resistor Carbon 1000 Ohms ¼ W. 10
R11, R13, R19, R26	R-15517	Resis. Car. 1 MEG. ¼ W. 10%
R17	R-26	Resis. Car. 10 M. 3 W. 10%
R18, R28, R29	R-15528	Resis. Car. 400 M. ¼ W. 20%
R5, R7, R14	R-15511	Resis. Car. 50 M. ¼ W. 20%
R20	R-15500	Resis. Car. 2 MEG. ¼ W. 10%
R21, R10, R22	R-15549	Resis. Car. 300 M. ¼ W. 20%
R32	R-16	Resistor Carbon 8000 Ohms ¼ W. 20%
R25	R-15576	Resistor Carbon 5000 Ohms ¼ W. 10%
R24	R-15533	Resistor Carbon 600 Ohms ¼ W. 10%
R8	R-15501	Resistor Carbon 25 M. 1 W. 20%
R1, R2, R23, R30	R-15515	Resis. Car. 100 M. ¼ W. 20%

Schematic Location	Part No.	Description
R31	R-15584	Resistor Carbon 250 Ohms 1 W. 10%
R9	R-15519	Resistor Carbon 700 Ohms ¼ W. 10%
R16	R-15557	Resis. Car. 20 M. ¼ W. 10%
R12	R-40	Resistor Carbon 4000 Ohms ¼ W. 10%
R34, R35	R-15520	Resistor Carbon .5 Meg. 20%
R33		1 Meg. Internal Connection in Magic Eye Socket
B1, B2, B3, B4 / B5, B6, B7	Y-B-6	Band Switch
	Y-B-9	Tone-Hi-Fidelity Switch
	Y-B-11	A.B.C.-A.V.E. Switch
	Y-B-13	Manual or Electric Switch
	Y-SP-13	8" Speaker Model 1057
	Y-SP-8-A	10" Speaker Model 1056
	Y-SP-16	12" Speaker Model 1058
	SPA-11	Speaker Transformer Model 1056
	SPA-27	Speaker Transformer Model 1057
Y-TP-10	Power Transformer	SPA-33 Speaker Transformer Model 1058
Y-CI-6	1st I. F. Coil Assembly	
Y-CI-5	2nd I. F. Coil Assembly	SPA-10 Speaker Voice Coil and Cone Model 1056
AM-70	Ant. Bank Assembly	
AM-71	R. F. Bank Assembly	SPA-26 Speaker Voice Coil and Cone Model 1057
AM-72	Osc. Bank Assembly	
P15089	Pilot Light Mazda No. 44	SPA-32 Speaker Voice Coil and Cone Model 1058
ES-4	Escutcheon	

The following tube types are employed:

TUBE	PURPOSE
6U7G	Radio Frequency Amplifier
6A8G	Modulator
6J5G	Oscillator
6U7G	Intermediate Frequency Amplifier
6Q7G	Diode Detector and A.V.E. Diode Driver
6U7G	Audio Compensator
6V6G	Power Output
6G5	Tuning Eye
6Q7G	Audio Amplifier
5Y3G	Rectifier

©John F. Rider, Publisher

©John F. Rider, Publisher

SCHEMATIC WIRING DIAGRAM - CHASSIS 11356

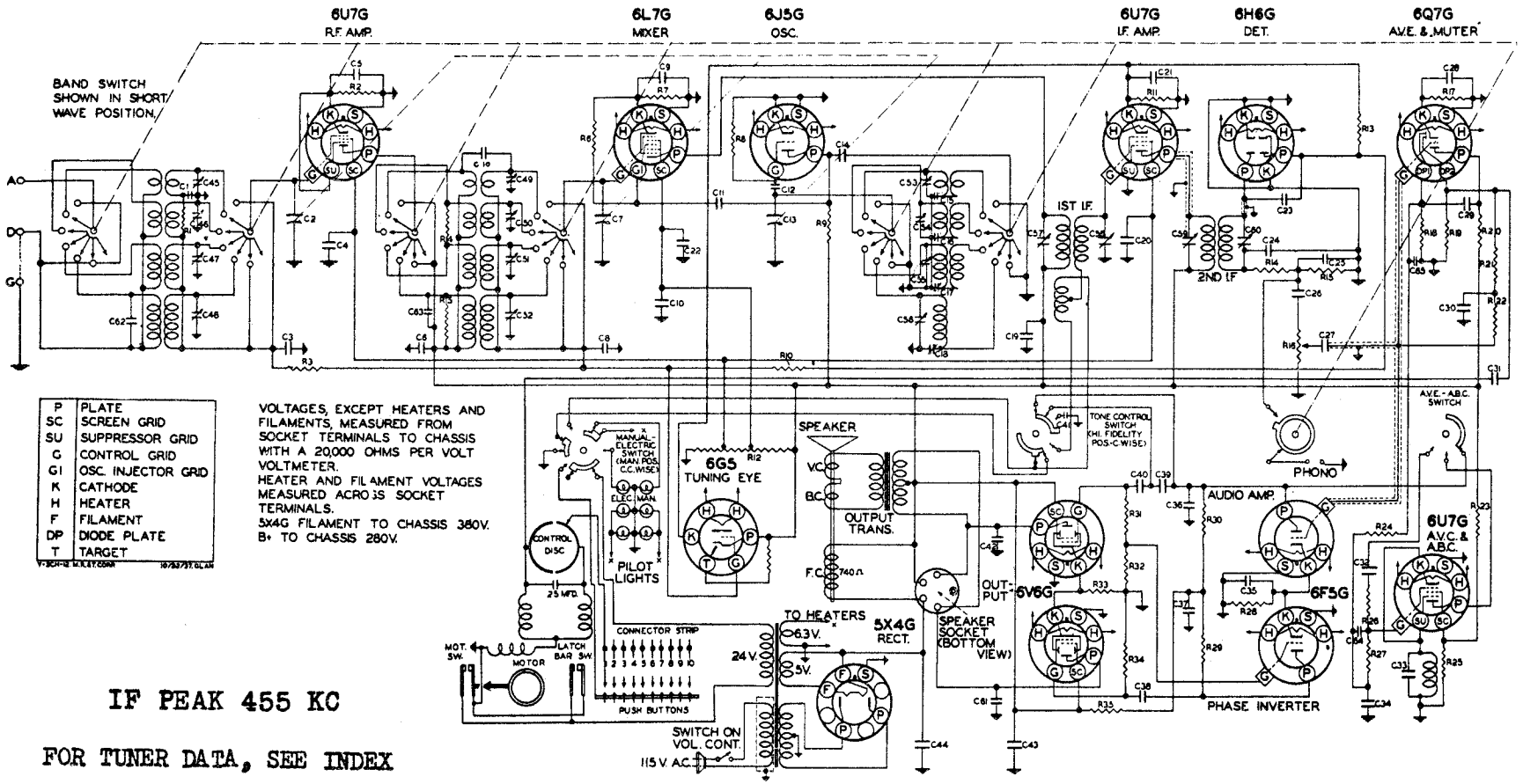

IF PEAK 455 KC

FOR TUNER DATA, SEE INDEX

VOLTAGE TABLE

TUBE	FUNCTION	P	SC	SU	K	H or F	DP1	DP2	
6U7G	RF AMPLIFIER	280	100	6	6	6.3	—	—	
6L7G	MIXER	280	150	—	8	6.3	—	—	
6J5G	OSCILLATOR	125	—	—	0	6.3	—	—	
6U7G	I.F. AMPLIFIER	280	100	0	3.5	6.3	—	—	
6H6G	DETECTOR	—	—	—	—	6.3	—	—	
6Q7G	A.V.E. & MUTER	135	—	—	1.9	6.3	—	20	RUNNING MOTOR
6U7G	A.V.E. & A.B.C.	0	17	.9	.9	6.3	—	—	NORMAL POS.
		175	20	1.25	1.25	6.3	—	—	FULL A.V.E.-A.B.C.
6F5G	AUDIO AMPLIFIER	225	—	—	2	6.3	—	—	NORMAL POS.
		175	—	—	1.9	6.3	—	—	FULL A.V.E.-A.B.C.
6F5G	PHASE INVERTER	205	—	—	2	6.3	—	—	
6V6G	OUTPUT (2)	265	280	—	17.5	6.3	—	—	
6G5	TUNING EYE	280	—	—	3.5	6.3	—	—	
5X4G	RECTIFIER	330*	—	—	—	4.8	—	—	*A.C. PER PLATE

TUNING RANGE—MODEL 11356

The tuning range of this receiver is from 138 KC to 18.5 MC in four convenient bands divided as follows:

Weather-band—138-325 KC—United States weather broadcasts, airplane beacons, and European long wave broadcasts.

A-Band—538-1800 KC—Standard American broadcast and some of the low frequency police stations.

B-Band—1770 KC to 6.0 MC—All police stations, some amateur and practically all airplane communications.

C-Band—5.8 MC-18.5 MC—Foreign and Domestic short wave stations.

REPLACEMENTS PARTS LIST - CHASSIS 11356

Schematic Location	Part No.	Description
C2, C7, C13	Y-CV-7	Cond. 3 Gang. Variable
C3, C4, C5, C6, C8, C9, C10	C-6	Cond. Tub. .05 MF. 200 V. (H.F.)
C1, C14	C-5	Cond. Tub. .01 MF. 400 V. (H.F.)
C19	C-15750	Cond. Tub. .25 MF. 400 V.
C32	C-15771	Cond. Tub. .004 MF. 600 V.
C26, C38, C40	C-15760	Cond. Tub. .02 MF. 400 V.
C39	C-15767	Cond. Tub. .001 MF. 600 V.
C20, C29	C-15756	Cond. Tub. .05 MF. 400 V.
C21, C30	C-15761	Cond. Tub. .1 MF. 200 V.
C33	C-9	Cond. Tub. .15 MF. 200 V.
C42, C61	C-11	Cond. Tub. .001 MF. 800 V.
C27	C-15764	Cond. Tub. .03 MF. 400 V.
C41	C-15759	Cond. Tub. .006 MF. 600 V.
C34	C-15770	Cond. Tub. .2 MF. 200 V.
C31	C-15752	Cond. Tub. .05 MF. 200 V.
C16	CM-6	Cond. Mica 1350 MMF. 5%
C15	CM-5	Cond. Mica 2830 MMF. 5%
C12, C23, C36, C62, C65	CM-15919	Cond. Mica 50 MMF. 10%
C24, C25	CM-15918	Cond. Mica 100 MMF. 20%
C11, C63, C64	CM-15928	Cond. Mica 250 MMF. 20%
C45, C46, C47	Y-CT-3	Cond. Ant. Trim. 3-30 MMF.
C49, C50, C51		Cond. R.F. Trim. 3-30 MMF.
C53, C54, C55		Cond. Osc. Trim. 3-30 MMF.
C48	Y-CT-7	Cond. Ant. Trim. 40-100 MMF.
C52		Cond. R.F. Trim. 40-100 MMF.
C56		Cond. Osc. Trim. 40-100 MMF.
C57, C58	Y-CT-2	Cond. 1st I.F. Trim.
C59, C60		Cond. 2nd I.F. Trim.
C43	Y-CE-13	Cond. Wet. Elec. 40 MF. 300 V.
C44	Y-CE-15	Cond. Wet. Elec. 30 MF. 415 V.
C35	Y-CE-23	Cond. Dry Elec. 20 MF. 25 V.
C22		Cond. Dry Elec. 20 MF. 200 V.
C28		Cond. Dry Elec. 10 MF. 25 V.
C37	CE-26	Cond. Tub. Dry Elec. 4 MF. 300 V.
C17	Y-CT-4	Cond. Variable Padder 200-600 MMF.
C18	Y-CT-6	Cond. Variable Padder 100-300 MMF.
R8, R14, R35	R-15511	Resistor Carbon 50K. ¼ W. 20%
R9	R-15501	Resistor Carbon 25K. 1 W. 20%
R1, R3, R6, R30	R-15515	Resistor Carbon 100K. ¼ W. 20%
R2, R7	R-15610	Resistor Carbon 900 Ohms ¼ W. 10%
R4, R5	R-15530	Resistor Carbon 2500 Ohms ¼ W. 10%
R11	R-15537	Resistor Carbon 400 Ohms ¼ W. 10%
R15, R21, R19	R-15520	Resistor Carbon 500 K. ¼ W. 20%
R18, R22, R24, R26	R-15517	Resistor Carbon 1 Meg. ¼ W. 20%
R27	R-15512	Resistor Carbon 250 K. ¼ W. 20%
R20, R29	R-15602	Resistor Carbon 250 K. ¼ W. 10%
R17	R-15611	Resistor Carbon 3000 Ohms ¼ W. 10%
R23	R-21	Resistor Carbon 75 K. 1 W. 10%
R28	R-40	Resistor Carbon 4000 Ohms ⅛ W. 10%
R31, R34	R-15554	Resistor Carbon 500 K. ¼ W. 10%
R32	R-33	Resistor Carbon 8000 Ohms ¼ W. 10%
R33	R-15607	Resistor Carbon 250 Ohms 2 W. 10%
R25	R-2	Resistor Carbon 5000 Ohms ½ W. 20%
R10, R13	R-43	Resistor Carbon 1 Meg. ¼ W. 20% (Insulated type)
R12	Y-RC-3	Resistor Candohm 7000, 2250, 5800 Ohms
R16	Y-VC-9	Volume Control 1 Meg.
	AM-88	Ant. Bank Assembly
	AM-89	R. F. Bank Assembly
	AM-90	Osc. Bank Assembly
	Y-CI-6	1st I.F. Coil Assembly
	Y-CI-5	2nd I.F. Coil Assembly
	Y-B-7	Band Switch
	Y-B-9	Tone and High Fidelity Switch
	Y-B-11	A.B.C.-A.V.E. Switch
	Y-B-13	Manual-Electric Switch
	Y-SP-9	Dynamic Speaker 12"
	SPA-16	Speaker Voice Coil and Cone
	SPA-17	Speaker Transformer
	Y-TP-7	Power Transformer
	DC-3	Dial Crystal (Croglass)
	ES-16	Escutcheon
	P-15089	Pilot Light Mazda No. 44 (4)
	P-16589	Pilot Light Mazda No. 51 (2)
	Y-CK-5	Filter Choke (A.V.E.-A.B.C.)

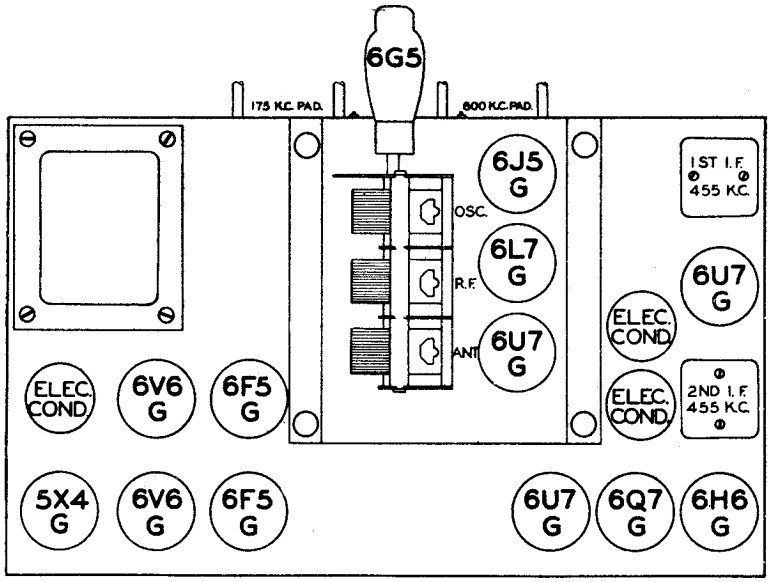

CHASSIS LAYOUT (TOP VIEW)
MODEL 11356

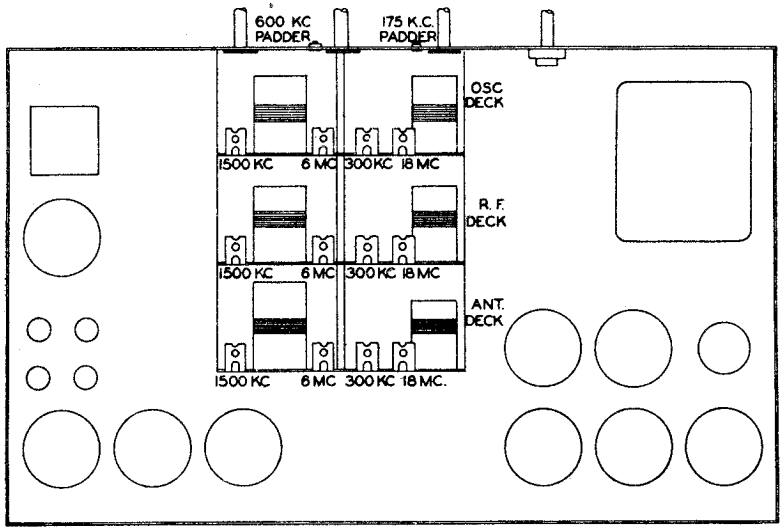

CHASSIS LAYOUT (BOTTOM VIEW)
MODEL 11356

©John F. Rider, Publisher

MAJESTIC RADIO & TELEV. CO.

MODEL 11656
Schematic, Voltage

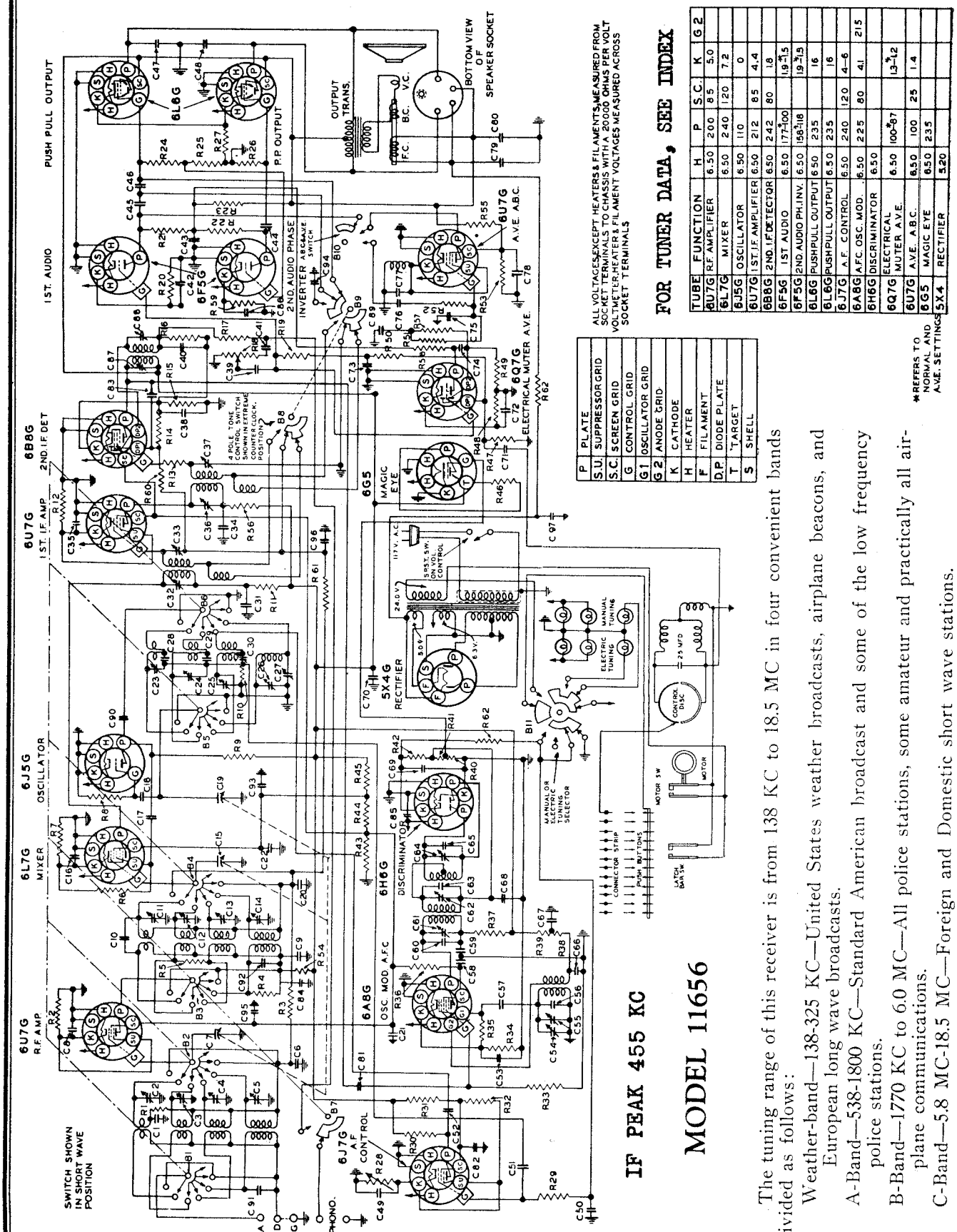

P	PLATE
S.U.	SUPPRESSOR GRID
S.C.	SCREEN GRID
G	CONTROL GRID
G1	OSCILLATOR GRID
G2	ANODE GRID
K	CATHODE
H	HEATER
F	FILAMENT
D.P	DIODE PLATE
T	TARGET
S	SHELL

ALL VOLTAGES EXCEPT HEATER & FILAMENTS, MEASURED FROM SOCKET TERMINALS TO CHASSIS WITH A 20000 OHMS PER VOLT VOLTMETER. HEATER & FILAMENT VOLTAGES MEASURED ACROSS SOCKET TERMINALS

FOR TUNER DATA, SEE INDEX

TUBE	FUNCTION	H	P	S.C.	K	G2
6U7G	R.F. AMPLIFIER	6.50	200	85	5.0	
6L7G	MIXER	6.50	240	120	7.2	
6J5G	OSCILLATOR	6.50	110		0	
6U7G	1ST I.F. AMPLIFIER	6.50	212	85	4.4	
6B8G	2ND. I.F. DETECTOR	6.50	242	80	1.8	
6F5G	1ST AUDIO	6.50	177-100		1.9-1.5	
6F5G	2ND AUDIO PH. INV.	6.50	156-118		1.9-1.5	
6L6G	PUSHPULL OUTPUT	6.50	235		16	
6L6G	PUSHPULL OUTPUT	6.50	235		16	
6J7G	A.F. CONTROL	6.50	240	120	4-6	
6A8G	A.F.C. OSC. MOD.	6.50	225	80	4.1	215
6H6G	DISCRIMINATOR	6.50				
6Q7G	ELECTRICAL MUTER A.V.E.	6.50			1.3-12	
6U7G	A.V.E. A.B.C.	6.50	100-87			
6G5	MAGIC EYE	6.50	100	25	1.4	
5X4	RECTIFIER	5.20	235			

*REFERS TO NORMAL AND A.V.E. SETTINGS

The tuning range of this receiver is from 138 KC to 18.5 MC in four convenient bands divided as follows:

Weather-band—138-325 KC—United States weather broadcasts, airplane beacons, and European long wave broadcasts.

A-Band—538-1800 KC—Standard American broadcast and some of the low frequency police stations.

B-Band—1770 KC to 6.0 MC—All police stations, some amateur and practically all airplane communications.

C-Band—5.8 MC-18.5 MC—Foreign and Domestic short wave stations.

©John F. Rider, Publisher

MODEL 11656
Socket, Trimmers
Parts, Alignment

MAJESTIC RADIO & TELEV. CO.

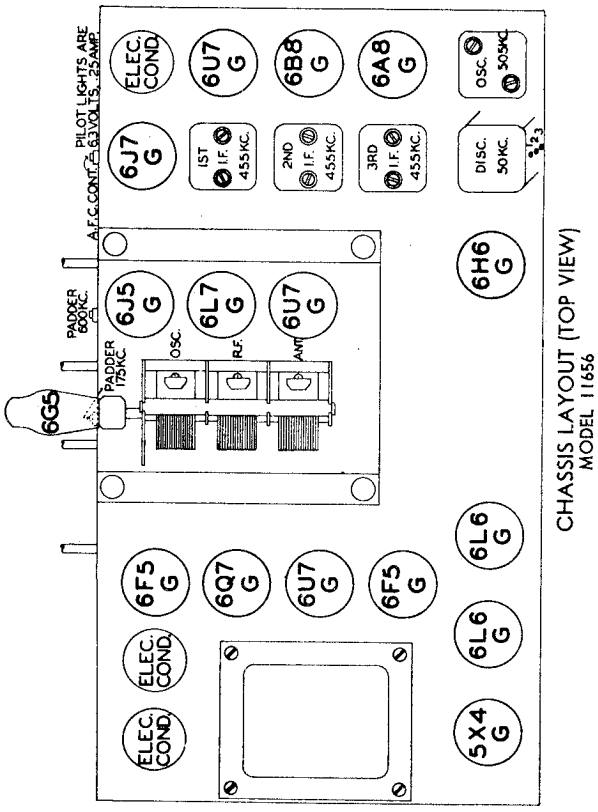

CHASSIS LAYOUT (TOP VIEW)
MODEL 11656

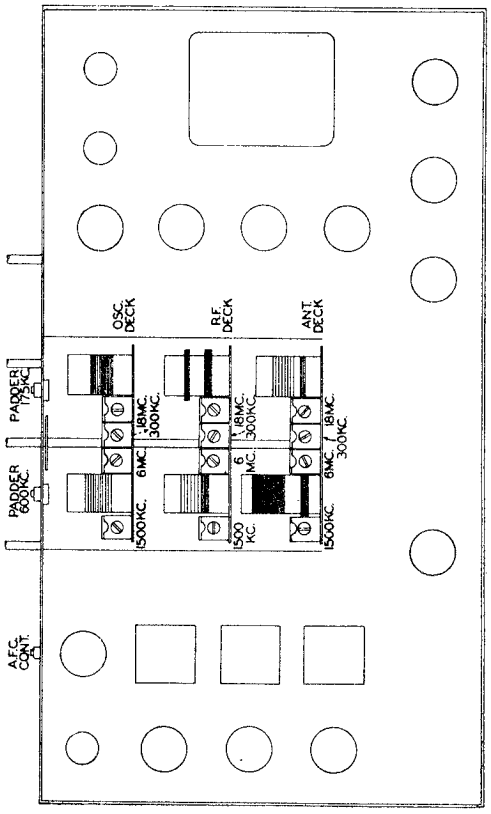

CHASSIS LAYOUT (BOTTOM VIEW)
MODEL 11656

REPLACEMENTS PARTS LIST-CHASSIS 11656

Schematic Location	Part No.	Description
C7, C15, C19	Y-CV-7	Cond. 3 Gang Variable
C68, C69	C-15772	Cond. Tub. .02 MFD. 200 V.
C1, C90	C-5	Cond. Tub. .01 MFD. 400 V.
C6, C8, C9, C16, C22, C95, C20	C-6	Cond. Tub. .05 MFD. 200 V. (H.F.)
C71	C-15752	Cond. Tub. .05 MFD. 200 V.
C31, C34, C58, C59, C66, C67	C-15757	Cond. Tub. .1 MFD. 400 V.
C35, C38, C73, C78, C84, C96	C-15761	Cond. Tub. .1 MFD. 200 V.
C39	C-15764	Cond. Tub. .03 MFD. 400 V.
C89	C-15770	Cond. Tub. .2 MFD. 200 V.
C21	C-15775	Cond. Tub. .5 MFD. 200 V.
C76	C-15771	Cond. Tub. .004 MFD. 600 V.
C47, C48	C-15	Cond. Tub. .002 MFD. 800 V.
C85	C-14	Cond. Tub. .5 MFD. 120 V.
C94	C-15759	Cond. Tub. .006 MFD. 600 V.
C70	C-15750	Cond. Tub. .25 MFD. 400 V.
C77	C-9	Cond. Tub. .15 MFD. 200 V.
C46	C-15767	Cond. Tub. .001 MFD. 600 V.
C41, C44, C45, C50	C-15760	Cond. Tub. .02 MFD. 400 V.
C49, C53, C74, C82	C-15756	Cond. Tub. .05 MFD. 400 V.
C51	CM-11	Cond. Mica 500 MMF. 10%
C56	CM-16	Cond. Mica 150 MMF. 10%
C60, C63, C65	CM-15917	Cond. Mica 650 MMF. 5%
C18, C40, C57, C81, C83, C91	CM-15919	Cond. Mica 50 MMF. 10%
C28	CM-5	Cond. Mica 2830 MMF. 5%
C29	CM-6	Cond. Mica 1350 MMF. 5%
C17, C75, C92	CM-7	Cond. Mica 250 MMF. 5%
C10	CM-10	Cond. Mica 10 MMF. 5%
C52	CM-15906	Cond. Mica 100 MMF. 10%
C42, C72, C86	CE-25	Cond. Tub. Dry Elec. 10 MFD. 25 V.
C43	CE-27	Cond. Tub. Dry Elec. 4 MFD. 300 V.
C79	CE-15	Cond. Wet Elec.
C80	CE-13	Cond. Wet Elec.
C93	B-17042	Cond. Wet Elec.
C54, C55	Y-CT-5	Cond. Air Trimmer
C2, C3, C4, C11, C12, C13, C23, C24, C25	Y-CT-3	Cond. Trimmer 3-30 MMF.
C5, C14, C26	Y-CT-7	Cond. Trimmer 40-100 MMF.
C30	Y-CT-4	Cond. Trimmer
C27	Y-CT-6	Cond. Trimmer
C61, C62, C64	Y-CP-3	Cond. Padder
C32, C33, C36, C37, C87, C88	Y-CT-2	I.F. Trimmer
R13	R-39	Carbon Resistor 750 K. ¼ W. 20%
R10	R-41	Carbon Resistor 75 Ohms ¼ W. 10%
R9	R-15501	Carbon Resistor 25 K. 1 W. 20%

Schematic Location	Part No.	Description
R8, R17, R23, R35	R-15511	Carbon Resistor 50 K. ¼ W. 20%
R4, R5	R-15530	Carbon Resistor 2500 Ohms ¼ W. 10%
R2, R7	R-15610	Carbon Resistor 900 Ohms ¼ W. 10%
R1, R3, R6, R21	R-15515	Carbon Resistor 100 K. ¼ W. 20%
R30, R31, R32	R-15510	Carbon Resistor 20 K. ¼ W. 20%
R14, R19, R42, R49, R52, R57, R60, R61	R-15517	Carbon Resistor 1 MEG. ¼ W. 20%
R16, R24, R26, R29, R40, R41, R47, R50	R-15520	Carbon Resistor 500 K. ¼ W. 20%
R11, R53, R56	R-2	Carbon Resistor 5000 Ohms ¼ W. 20%
R12	R-15519	Carbon Resistor 700 Ohms ¼ W. 10%
R15, R34	R-15551	Carbon Resistor 250 Ohms ¼ W. 10%
R36	R-15566	Carbon Resistor 2000 Ohms ¼ W. 10%
R33, R62	R-15500	Carbon Resistor 2 MEG. ¼ W. 20%
R22, R51, R58	R-15512	Carbon Resistor 250 K. ¼ W. 20%
R20, R38, R39, R54, R59	R-15556	Carbon Register 10000 Ohms ¼ W. 10%
R37, R48	R-15617	Carbon Resistor 3000 Ohms ¼ W. 20%
R25	R-16	Carbon Resistor 8000 Ohms ¼ W. 20%
R55	R-15524	Carbon Resistor 50 K. 1 W. 10%
R28	Y-PA-12	Variable Resistor 1000 Ohms
R18	Y-VC-9	Volume Control 1 MEG.
R27	Y-RC-5	Candohm Resistor
R43, R44, R45	Y-RC-3	Candohm Resistor
R46		1 MEG. Internal connection in magic eye socket
B1, B2, B3, B4, B5, B6, B7	Y-B-7	Band Switch
B8, B9	Y-B-8	Tone Control and Hi. Fidelity Switch
B10	Y-B-11	A.B.C. and A.V.E. Switch
B11	Y-B-12	Manual or Electric Switch
	Y-CK-5	A.B.C. Filter Choke
	Y-TP-8	Power Transformer
	Y-SP-10	Speaker 12"
	Y-CI-8	1st and 2nd I.F. Coil Assembly
	Y-CI-7	3rd I.F. Coil Assembly
	Y-CI-9	Discriminator Coil Assembly
	Y-CI-10	Oscillator Coil Assembly
	AM-88	Antenna Bank Assembly
	AM-89	R.F. Bank Assembly
	AM-90	Osc. Bank Assembly
	SPA-18	Speaker voice coil and cone
	SPA-19	Speaker Trans.
	ES-7	Escutcheon
	DC-3	Dial Crystal
	P-15089	Pilot light Mazda No. 44
	P-16589	Pilot light Mazda No. 51

©John F. Rider, Publisher

MODEL C4-1932 Converter
Schematic

MIDWEST RADIO CORP.

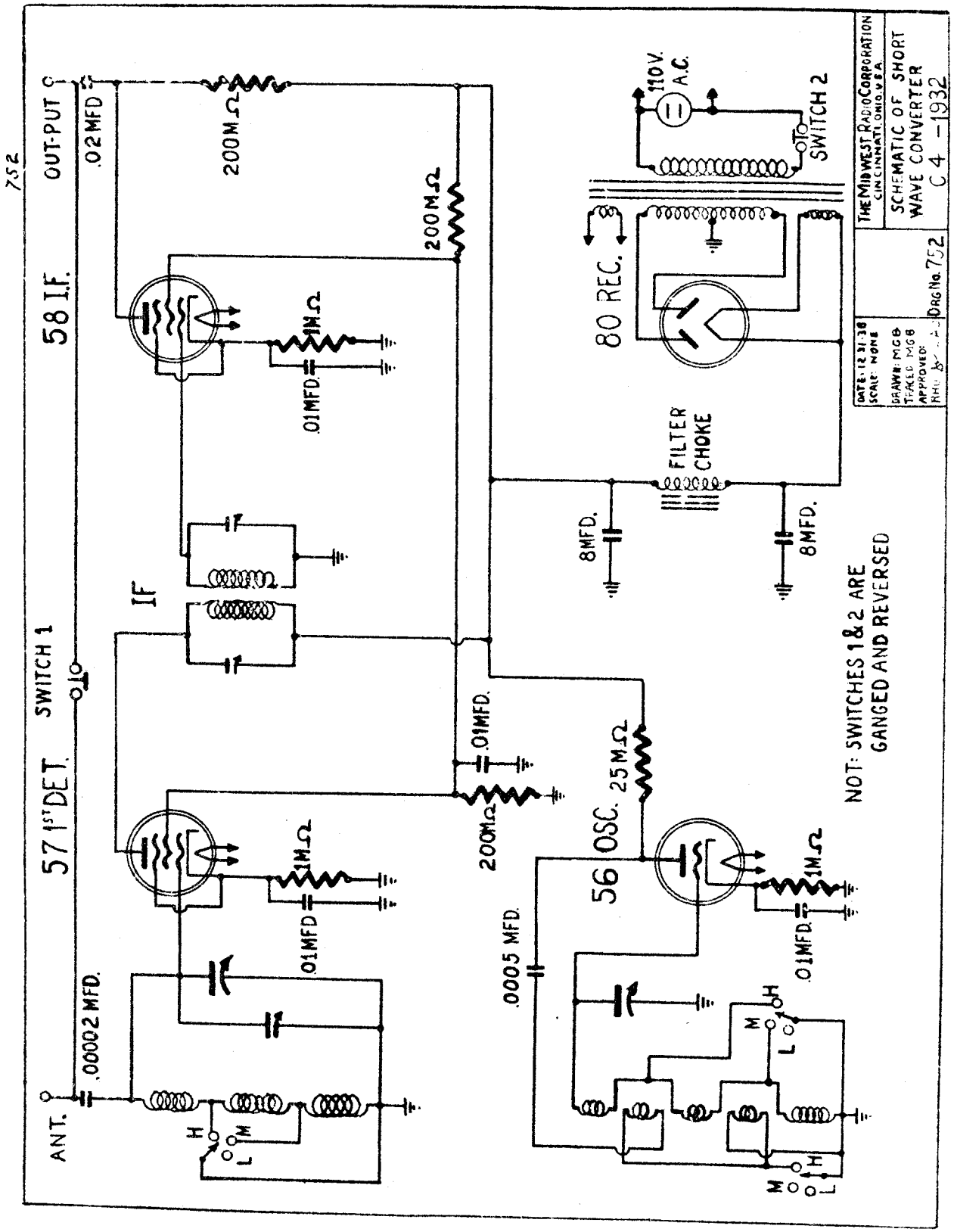

©John F. Rider, Publisher

MODEL 35-5SW Late, 35SW
Schematic

MIDWEST RADIO CORP.

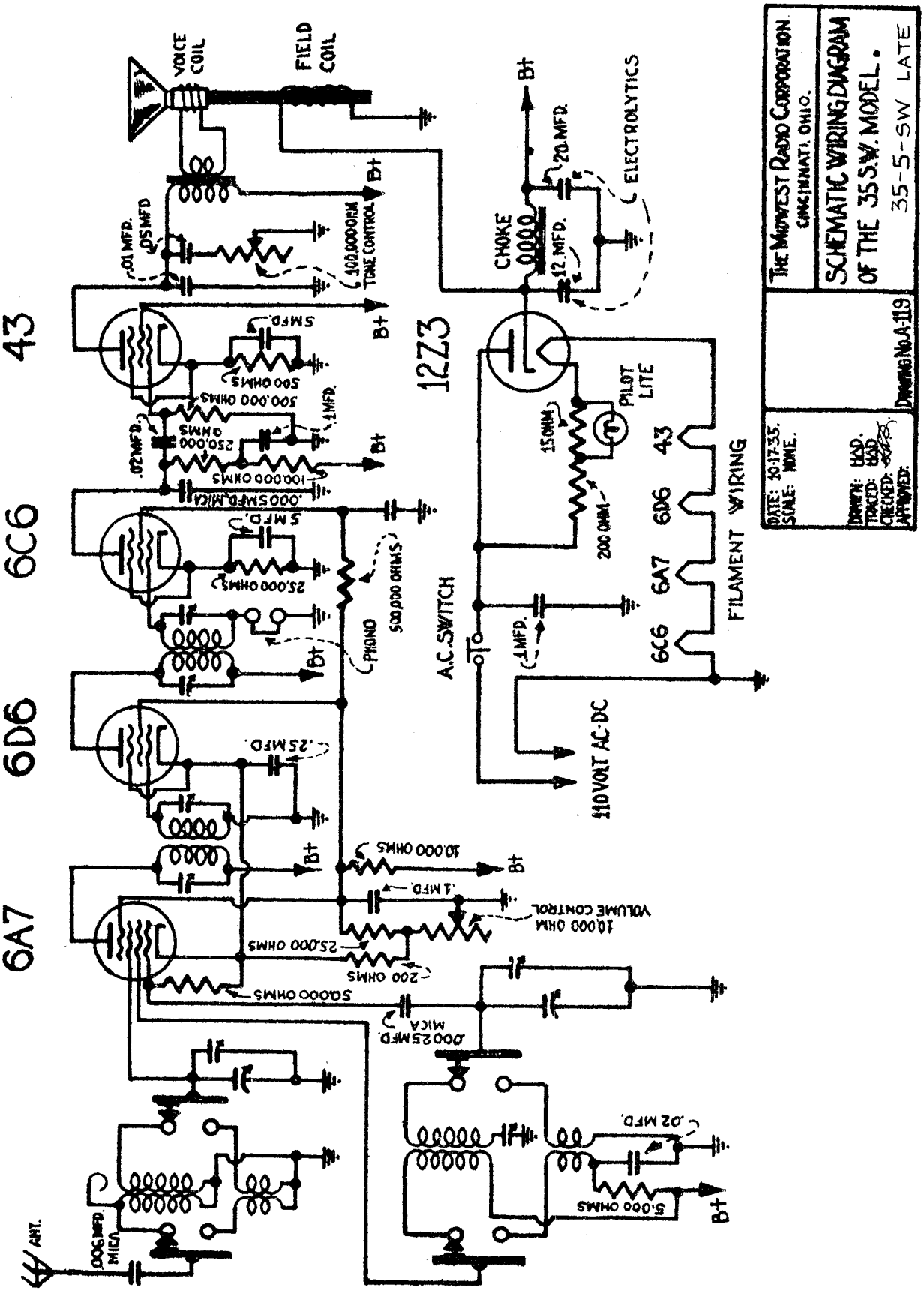

©John F. Rider, Publisher

MIDWEST RADIO CORP.

MODEL 5-36 Auto
Schematic, Socket
Trimmers

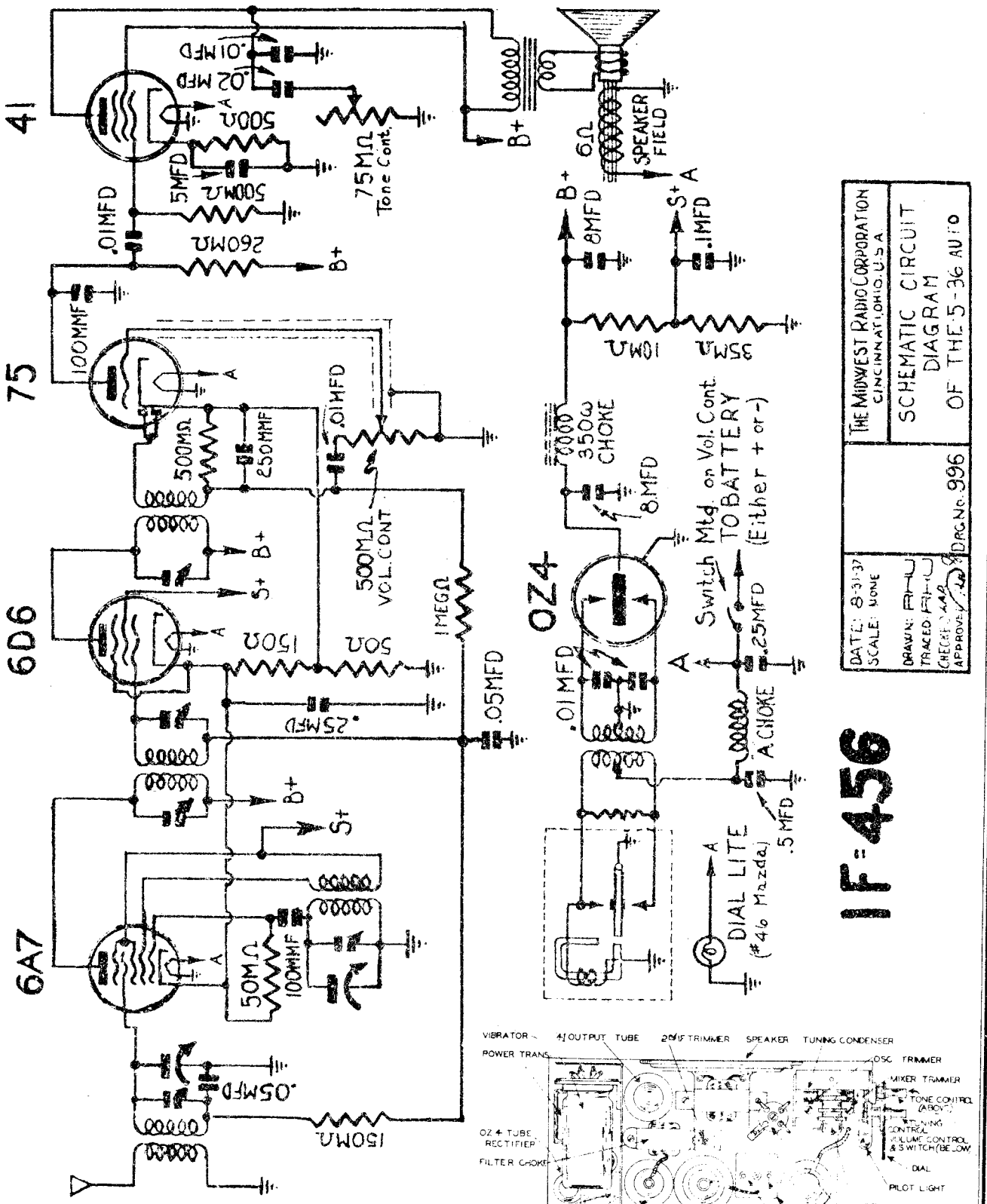

THE MIDWEST RADIO CORPORATION CINCINNATI, OHIO, U.S.A.

SCHEMATIC CIRCUIT DIAGRAM OF THE 5-36 AUTO

DRG. No. 996

DATE: 8-31-37
SCALE: NONE
DRAWN:
TRACED
CHECKED
APPROVED

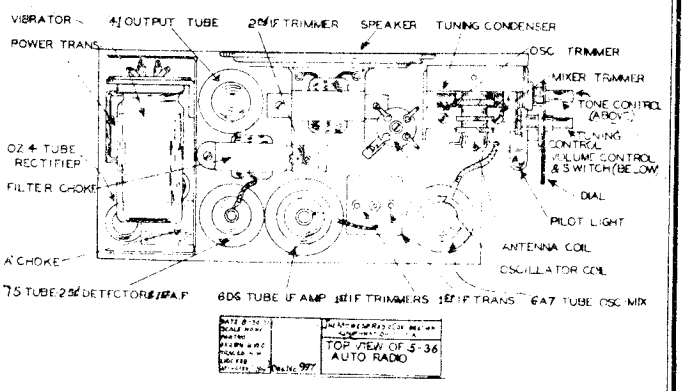

FOR ALIGNMENT, SEE INDEX

©John F. Rider, Publisher

MODEL 8-31 Batt.
Socket, Trimmers

MIDWEST RADIO CORP.

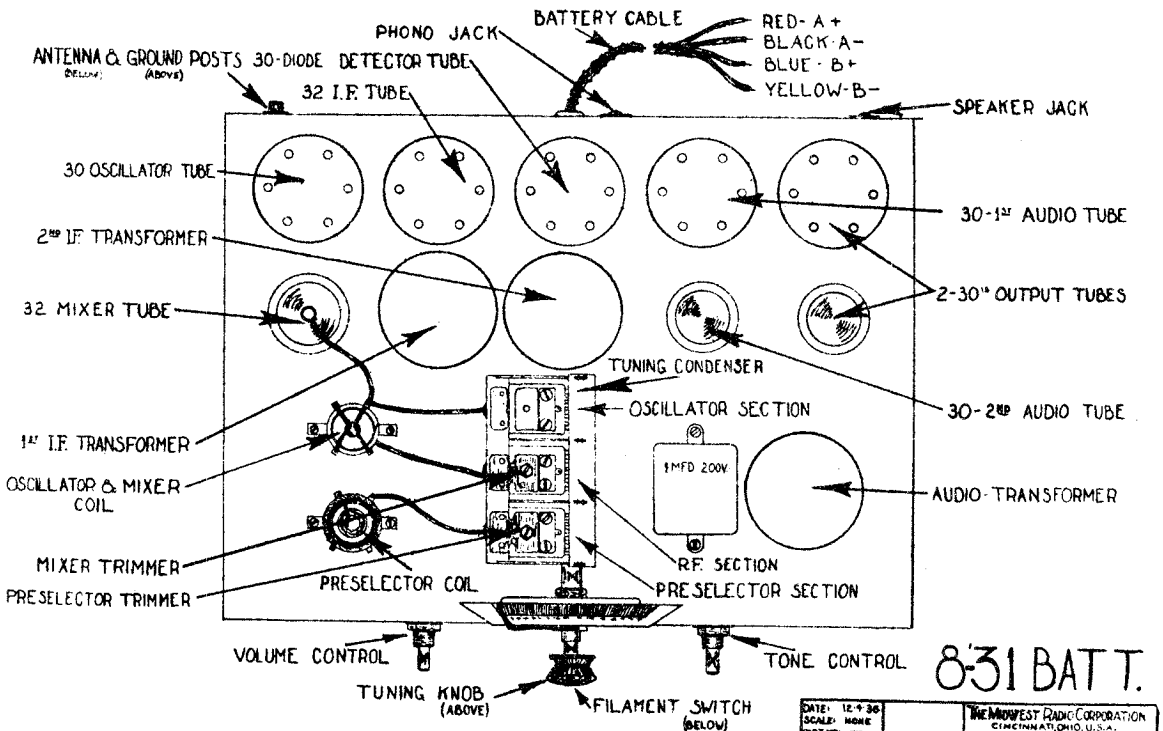

8-31 BATT.

DATE: 12-3-36 SCALE: NONE PART NO: — DRAWN: RH-RJ TRACED: RH-RJ APPROVED: Y.C.D.	THE MIDWEST RADIO CORPORATION CINCINNATI, OHIO, U.S.A. TOP VIEW OF THE 8-31 BATT MODEL RECEIVER SHOWING LOCATION OF TUBES & OTHER PARTS Drg. No. 693

FOR SHEMATIC SEE INDEX

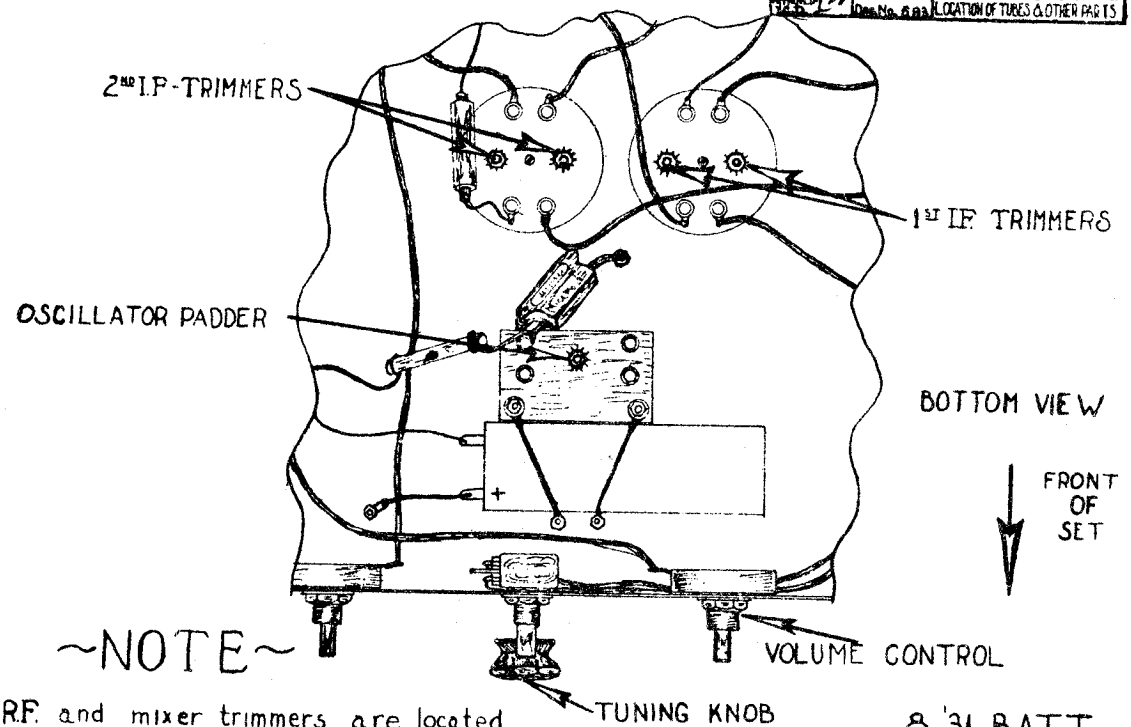

~NOTE~

R.F. and mixer trimmers are located on top of condenser gang.
For relative positions see top-view.

8-31 BATT.

DATE: 12-3-36 SCALE: NONE PART NO: — DRAWN: R.H.U. TRACED: R.H.U. APPROVED: Y.C.D.	THE MIDWEST RADIO CORPORATION CINCINNATI, OHIO, U.S.A. TRIMMER & PADDER LOCATIONS FOR THE 8-31 BATT. MODEL RECEIVER Drg. No. 692

©John F. Rider, Publisher

MODEL 5-36 Auto Alignment

MIDWEST RADIO CORP

MODEL 8-38 Batt.
MODEL 8-38 AC-DC, Export
MODEL 8-38 AC-DC Domestic
Voltage

FOR OTHER DATA - SEE INDEX

1938 EXPORT - 8 TUBE AC-DC MIDWEST RECEIVER

OPERATING VOLTAGES

Note:- These voltages were taken with no signal input and with the volume control off.

TUBE	PLATE	SCREEN	SUPPRESSOR	CATHODE	HEATER
6A8 Mixer-Osc.	54* 94	50	.2	1	4.5
6K7 I.F. Amp.	90	94	1	1	4.5
6Q7 Diode Audio	30			.4	4.5
6C5 Phase Inverter	42			2.2	4.5
25B6 Output	90	100		15	22
25Z5 Rectifier	100				22
K17 Ballast	40 V. drop				

*Plate #2

All voltages taken with 110 V. line voltage and 1000 ohm per volt meter

INSTRUCTIONS FOR ALIGNMENT OF THE MIDWEST 36 MODEL 5 TUBE AUTOMOBILE RECEIVER

I.F. ALIGNMENT

(1) Set signal generator to 456 k.c. and connect output to grid of 6A7 tube. Connect output meter from plate of 41 tube to ground. Ground stator of oscillator section (rear section) of variable condenser. Adjust both grid and plate trimmers of 1st I.F. transformer and 2nd I.F. trimmer, located near speaker, for maximum gain on output meter.

This completes the I.F Alignment of the receiver.

R.F. ALIGNMENT

(2) Connect signal generator to antenna post on set through a standard dummy antenna. Remove short circuit from condenser. Set generator and dial to 1500 k.c. and peak variable condenser trimmer for maximum output on meter.

This completes the R.F. Alignment.

NOTE: To assure more accurate trimmer setting always use lowest possible test oscillator output consistent with readable output meter scale deflection.

1938 DOMESTIC - 8 TUBE BATTERY MIDWEST RECEIVER

OPERATING VOLTAGES

Note:- These voltages were taken with no signal input and with the volume control off.

TUBE	PLATE	SCREEN	SUPPRESSOR	CATHODE	HEATER
6D8 Mixer-Osc.	70* 134	58	.2	1.2	5.6
6S7 I.F. Amp.	134	58	1.2	1.2	5.6
6L5 2nd Det.					5.6
6L5 1st Audio	134			5.4	5.6
6L5 Phase Inv.	50	130		3	5.6
1J6 Output	134				2
6G5 Tuning Eye	136				5.6
#4A Ballast	4 V. Drop				

* Plate #2

1938 - 8 TUBE AC-DC MIDWEST RECEIVER

OPERATING VOLTAGES

Note:- These voltages were taken with no signal input and with the volume control off.

TUBE	PLATE	SCREEN	SUPPRESSOR	CATHODE	HEATER
6A8 Mic-Osc.	120	50	Internal Connection	1.5	6.3
6K8 1st I.F.	95	100	1.5	1.5	6.3
2nd Det. 6Q7 1st Audio	25				6.3
25B6 Output	90	100	Internal Connection	%	25
25Z5 Rectifier	115AC			100	25
6G5 Tuning Ind.	95				6.3
K 92B-Ballast	85 V. drop				
K 78B-Ballast	60 V. drop				

All voltages taken with 110 V. line voltage and 1000 ohm per volt meter.

©John F. Rider, Publisher

MODEL 6-38 AC-DC
MODEL 7-38 Batt.Export
MODEL 7-38 AC-DC

MIDWEST RADIO CORP.

MODEL 10-38 AC-DC
Voltage

FOR OTHER DATA SEE INDEX

1938 DOMESTIC - 10 TUBE AC-DC MIDWEST RECEIVER

OPERATING VOLTAGES

Note:- These voltages were taken with no signal input and with the volume control off.

TUBE	PLATE	SCREEN	SUPPRESSOR	CATHODE	HEATER
6A8 Mixer-Osc.	54*	50	.2	1	5.6
	94				
6K7 I.F. Amp.	90	94	1	1	5.6
6Q7 2nd Det.	30			.6	5.6
6Q7 Phase Inv.	42			2.2	5.6
6G5 Outputs	90	94		16	22
25B6 Rectifier	94				22
2525 Ballast	85 V. drop				
K92B Ballast	40 V. drop				
L49B Tuning Eye	94				5.6
6G5					

* Plate #2

All voltages taken with 110 V. line voltage and 1000 ohm per volt meter.

1938 - 7 TUBE AC-DC MIDWEST RECEIVER

TUBE	PLATE	SCREEN	SUPPRESSOR Internal Connection	CATHODE	HEATER
6A8 Mix-Osc.	100	50	1.5	1.5	6.3
6K7 1st I.F.	95	100	1.5	1.5	6.3
6Q7 2nd Det. 1st Audio	25				6.3
25B6 Output	90	100	Internal Connection		25
2525 Rectifier	115ac			100	25
K92 B- Ballast	85 V. drop				
K78 B- Ballast	60 V. drop				

All voltages taken with 110 V. line voltge and 1000 ohm per volt meter.

1938 EXPORT- 6 TUBE AC-DC MIDWEST RECEIVER

OPERATING VOLTAGES

Note:- Those voltages were taken with no signal input and with the volume control off

TUBE	PLATE	SCREEN	SUPPRESSOR	CATHODE	HEATER
CA8 Mixer-Osc.	96	44	2	1.4	5.4
	56*				
6K7 I.F. Amp.	92	97	1.4	1.4	5.4
6Q7 Diode Aud.	24			.6	5.4
25B6 Output	90	98			22
2525 Rectifier	98				22
L49B Ballast	42 V. drop				

* Plate #2

All voltages taken with 110 V. line voltage and 1000 ohm per volt meter.

1938 EXPORT - 7 TUBE BATTERY MIDWEST RECEIVER

OPERATING VOLTAGES

Note:- These voltages were taken with no signal input and with the volume control off.

TUBE	PLATE	SCREEN	SUPPRESSOR	CATHODE	HEATER
6D8 Mixer-Osc.	70*	58	.2	1.2	5.6
	134				
6S7 I.F. Amp.	134	58	1.2	1.2	5.6
6L5 1st Audio	134			5.4	5.6
6L5 2nd Det.					5.6
6L5 Phase Inv.	50	130		3	5.6
L76 Output	134				2
6G5 Tuning Eye	136				5.6

* Plate #2

©John F. Rider, Publisher

INSTRUCTIONS FOR ALIGNING THE 1938 MIDWEST

7-8-9-10 DOMESTIC AC-DC SETS
6-7-8-9- EXPORT AC-DC SETS
7-8 BATTERY SETS

INTERMEDIATE FREQUENCY ALIGNMENT

The I.F."s should be peaked at 456 kc. for maximum output. Connect signal generator grid of 6A8 tube leaving grid cap on tube. Use smallest possible input consistant with a readable cutput.

BAND ALIGNMENT

Inside band "A", covers from 550 to 1700 kc. This band should be padded at 600 kc. and trimmed at 1400 kc. Radio Frequency trimmer should be adjusted at 1400 kc. for maximum gain.

Middle band "L", covers from 1.7 to 5.5 megacycles. This band should be padded at 1.8 mc. and trimmed at 4.3 mc. The R.F. trimmer should be adjusted at 5.3 mc. for maximum gain.

Note:- On EXPORT sets the above band is called "E" and covers 125 kc. to 350 kc. Pad at 135 kc. and trim at 340 kc. Adjust R.F. trimmer at 340 kc. for maximum gain.

Outside band "M", covers from 5.5 mc. to 18 mc. This band has a fixed padder and should be trimmed at 13 mc. Adjust R.F. trimmer at 13 mc. for maximum gain.

Note:- When aligning bands a dummy antenna, consisting of a 200 ohm resistance and 10 mmfd. condenser in parallel, should be connected in series with output of signal generator.

1938 DOMESTIC - 9 TUBE AC-DC MIDWEST RECEIVER

TUBE	PLATE 54*	SCREEN	SUPPRESSOR	CATHODE	HEATER
6A8 Mixer-Osc.	94	50	.2	1	5.6
6K7 I.F. Amp.	90	94	1	1	5.6
6Q7 2nd Det.	30			.6	5.6
6C5 Phase Inv.	42			2.2	5.6
25B6 Outputs	90	94		16	22
25Z5 Rectifier	94				22
K92B Ballast	85 V. drop				
L49B Ballast	40 V. drop				

* Plate #2

Note:- These voltages were taken with no signal input and with the volume control off.

All voltages taken with 110 V. line voltage and 1000 ohm per volt meter.

INSTRUCTIONS FOR ALIGNING THE 12AC - 38 MIDWEST RECEIVER

INTERMEDIATE FREQUENCY ALIGNMENT

Remove the Oscillator tube. The I.F.'s should be peaked at 456 kc. for maximum gain. The third I.F. transformer must be realigned to obtain a.f.c. voltage. Turn tone control to right half; insert 5 ma. meter in series with 6J7 control tube cathode and note reading. Turn tone control switch to left half and adjust diode trimmer of third I.F. so that this reading is again obtained.

BAND ALIGNMENT

The "E" band covers 125 kc. to 350 kc. This band should be padded at 135 kc. and trimmed at 340 kc. Adjust R.F. and Mixer trimmers for maximum gain at 340 kc.

The "A" band covers 550 kc. to 1500 kc. This band should be padded at 540 kc. and trimmed at 1400 kc. Adjust R.F. and Mixer trimmers for maximum gain at 1400 kc.

The "L" band covers from 1.5 mc. to 4.5 mc. This band should be padded at 1.8 mc. and trimmed at 4.0 mc. The R.F. trimmer should be adjusted at 4.0 mc. for maximum gain.

The "M" band covers from 4.0 mc. to 12 mc. This band has a fixed padder and should be trimmed at 11.5 kc. Adjust R.F. and Mixer trimmer for maximum gain at 11.5 mc.

The "H" band covers from 12 mc. to 30 mc. This band has a fixed padder and should be trimmed at 26 mc. Adjust R.F. trimmer at 26 mc. for maximum gain.

Note:- When aligning bands a dummy antenna, consisting of a 200 ohm resistance and 10 mmfd. condenser in parallel, should be connected in series with output of signal generator.

1938 EXPORT - 9 TUBE AC-DC MIDWEST RECEIVER

TUBE	PLATE 54*	SCREEN	SUPPRESSOR	CATHODE	HEATER
6A8 Mixer-Osc.	94	50	.2	1	4.5
6K7 I.F. Amp.	90	94	1	1	4.5
6Q7 Diode Audio	30			.6	4.5
6C5 Phase Inver.	42			2.2	4.5
25B6 Output	90	100		15	22
6G5 Tuning Eye	90				4.5
25Z5 Rectifier	100				22
K17 Ballast	40 V. drop				

* Plate #2

All voltages taken with 110 V. line voltage and 1000 ohm pervolt meter..

©John F. Rider, Publisher

MODEL 8-39
Schematic, Voltage
Socket, Parts

MIDWEST RADIO CORP.

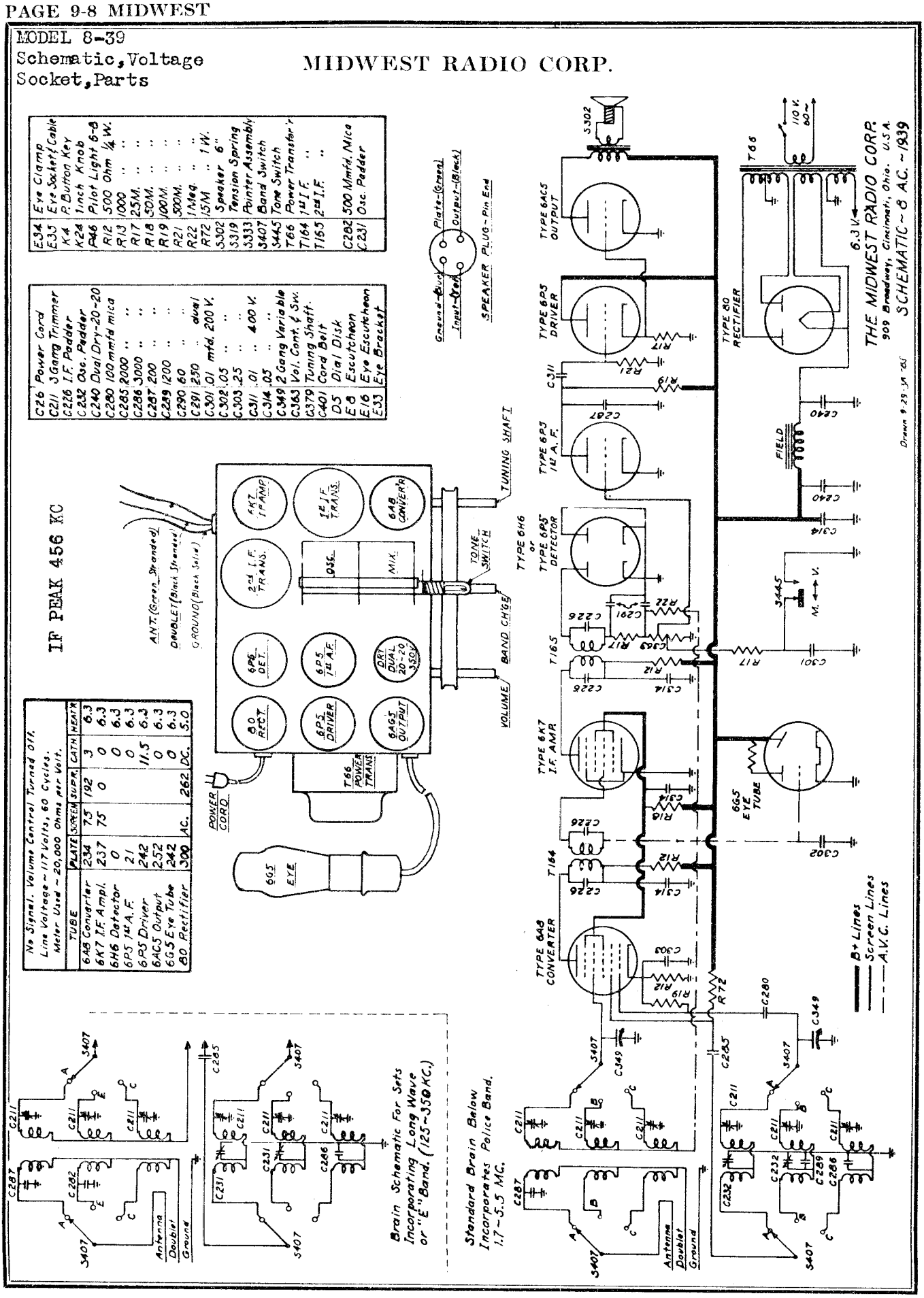

No Signal. Volume Control Turned Off. Line Voltage ~ 117 Volts, 60 Cycles. Meter Used ~ 20,000 Ohms per Volt.					
TUBE	PLATE	SCREEN	SUPR.	CATH	HEATR.
6A8 Converter	234	75	192	3	6.3
6K7 I.F. Ampl.	237	75	0	0	6.3
6H6 Detector	0			0	6.3
6P5 1st A.F.	21			0	6.3
6P5 Driver	242			11.5	6.3
6AC5 Output	252			0	6.3
6G5 Eye Tube	242			0	6.3
80 Rectifier	300	AC.		262	DC.	5.0

C26	Power Cord
C211	3 Gang Trimmer
C226	I.F. Padder
C232	Osc. Padder
C240	Dual Dry-20-20
C280	100 mmfd mica
C285	2000 " "
C286	3000 " "
C287	200 " "
C289	1200 " "
C290	60 " "
C291	250 " " dual
C301	.01 mfd. 200 V.
C302	.05 " "
C303	.25 " "
C311	.01 " " 400 V.
C314	.05 " "
C349	2 Gang Variable
C363	Vol. Cont. & Sw.
G379	Tuning Shaft.
G401	Cord Belt
D5	Dial Disk
E8	Escutcheon
E16	Eye Escutcheon
E33	Eye Bracket

E34	Eye Clamp
E35	Eye Socket & Cable
K4	P. Button Key
K24	1 inch Knob
P46	Pilot Light 6-8
R12	500 Ohm ½ W.
R13	1000 " "
R17	2.5M. " "
R18	50M. " "
R19	100M. " "
R21	500M. " "
R22	1Meg. " "
R72	15M " 1W.
S302	Speaker 6"
S319	Tension Spring
S333	Pointer Assembly
S407	Band Switch
S445	Tone Switch
T66	Power Transfer
T164	1st I.F. "
T165	2nd I.F. "
C282	500 Mmfd. Mica
C231	Osc. Padder

©John F. Rider, Publisher

MIDWEST RADIO CORP.

MODEL 9-31 (4 SG)
MODEL 9-32
Socket, Trimmers

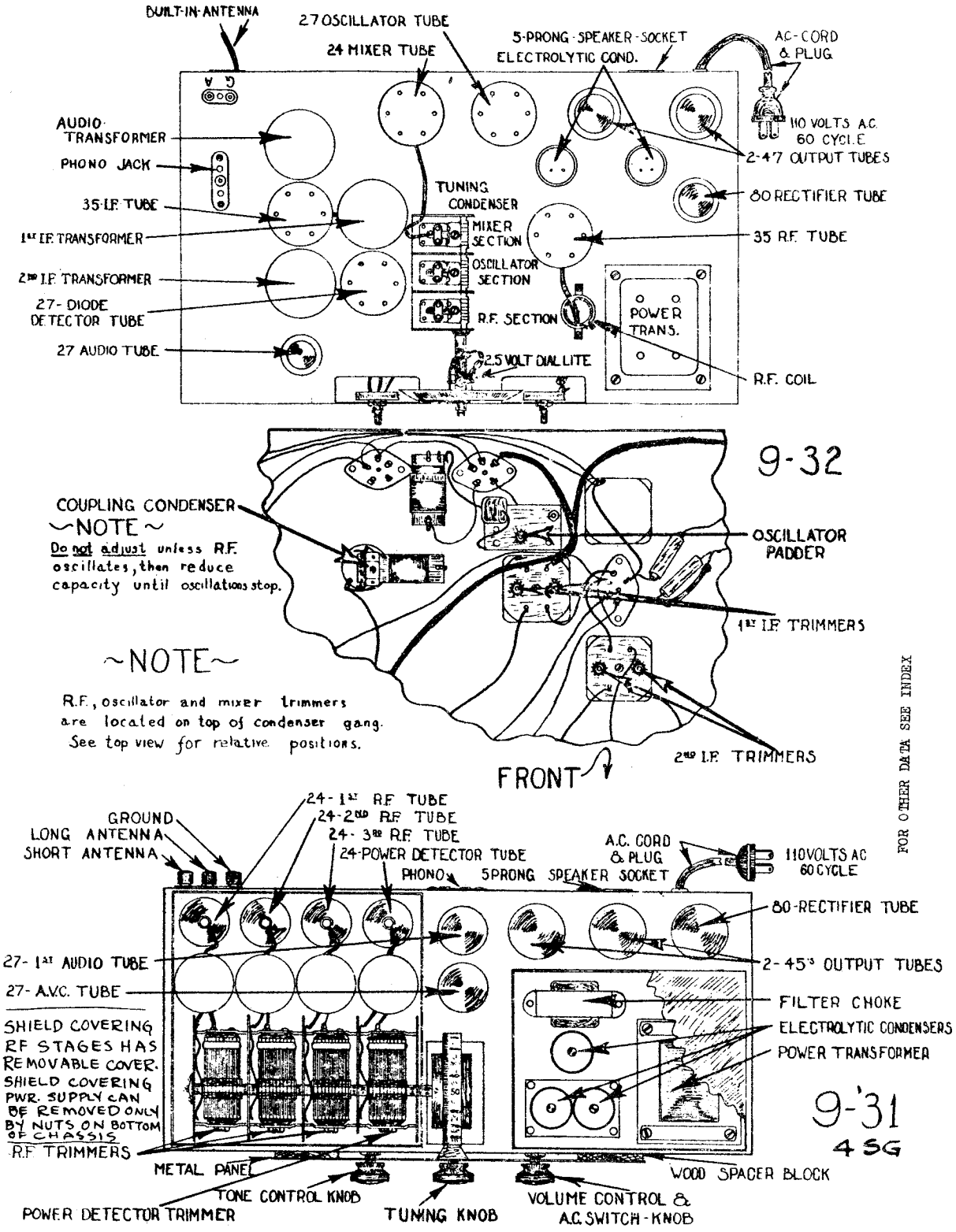

FOR OTHER DATA SEE INDEX

©John F. Rider, Publisher

MODEL 12-39
Schematic, Socket Voltage, Parts

MIDWEST RADIO CORP.

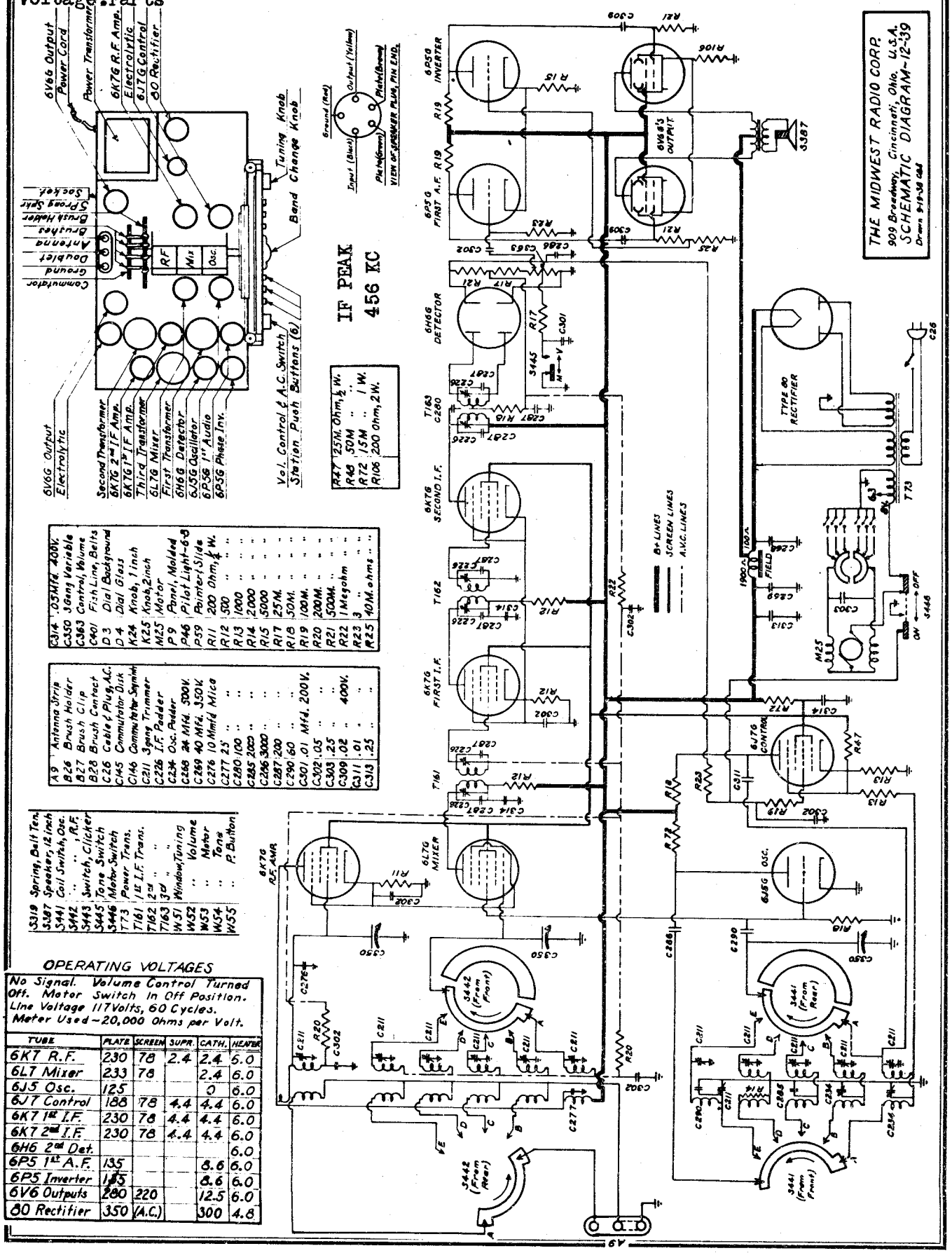

R47	.25M. Ohm, ½ W.	
R48	.50M " 1 W.	
R72	1.5M " 1 W.	
R106	200 Ohm, 2 W.	

C314	.05Mfd. 400V.	
C350	3 Gang Variable	
C363	Control, Volume	
C401	Fish Line, Belts	
D3	Dial Background	
D4	Dial Glass	
K24	Knob, 1 inch	
K25	Knob, 2 inch	
M23	Motor	
P9	Panel, Molded	
P46	Pilot Light-6-8	
P59	Pointer, Side	
R11	200 Ohm, ½ W.	
R12	500 " " "	
R13	1000 " " "	
R14	2000 " " "	
R15	5000 " " "	
R17	25M. " " "	
R18	50M. " " "	
R19	100M. " " "	
R20	200M. " " "	
R21	500M. " " "	
R22	1 Megohm " "	
R23	3 " " "	
R25	40M. ohms " "	

A9	Antenna Strip	
B26	Brush Holder	
B27	Brush Clip	
B28	Brush Contact	
C26	Cable & Plug, A.C.	
C45	Commutator Disk	
C146	Commutator-Symph	
C211	3 gang Trimmer	
C226	I.F. Padder	
C234	Osc. Padder	
C255	24 Mfd. 500V.	
C269	40 Mfd. 350V.	
C276	10 Mmfd Mica	
C277	25 " " "	
C280	100 " " "	
C285	200 " " "	
C296	3000 " " "	
C287	200 " " "	
C290	60 " " "	
C301	.01 Mfd. 200V.	
C302	.05 " " "	
C303	.25 " " "	
C309	.02 " " 400V.	
C311	.01 " " "	
C313	.25 " " "	

S319	Spring, Belt Ten.	
S387	Speaker, 12 inch	
S441	Coil Switch, Osc.	
S442	" " " R.F.	
S443	Switch, Clicker	
S445	Tone Switch	
S446	Motor Switch	
T73	Power Trans.	
T161	1st I.F. Trans.	
T162	2nd " "	
T163	3rd " "	
W51	Window, Tuning	
W52	" Volume	
W53	" Motor	
W54	" Tone	
W55	" P. Button	

OPERATING VOLTAGES

No Signal. Volume Control Turned Off. Motor Switch In Off Position. Line Voltage 117 Volts, 60 Cycles. Meter Used – 20,000 Ohms per Volt.

TUBE	PLATE	SCREEN	SUPR.	CATH.	HEATER
6K7 R.F.	230	78	2.4	2.4	6.0
6L7 Mixer	233	78		2.4	6.0
6J5 Osc.	125			0	6.0
6J7 Control	188	78	4.4	4.4	6.0
6K7 1st I.F.	230	78	4.4	4.4	6.0
6K7 2nd I.F.	230	78	4.4	4.4	6.0
6H6 2nd Det.					6.0
6P5 1st A.F.	135			8.6	6.0
6P5 Inverter	135			8.6	6.0
6V6 Outputs	280	220		12.5	6.0
80 Rectifier	350	(A.C.)		300	4.8

©John F. Rider, Publisher

MIDWEST RADIO CORP.

MODELS 12-16-18-20,1938
Alignment
MODEL 18-38
MODEL 20-38
Voltage

FOR OTHER DATA SEE INDEX

INSTRUCTIONS FOR ALIGNING THE 16-TUBE, 18-TUBE AND 20-TUBE AND 12-TUBE 1938 MIDWEST RECEIVERS

INTERMEDIATE FREQUENCY ALIGNMENT

Remove the Oscillator tube. I.F. alignment should not be attempted without the use of an Oscilloscope. Align the third I.F. to obtain characteristic resonance curve across 2nd detector diode load. Likewise, align 2nd I.F. to obtain resonance in 2nd I.F. stage. These are taken from an audio voltage. The discriminator and 1st I.F. transformer are aligned with an A. F. C. voltage. Do not attempt to change A.F.C. alignment unless you are familiar with characteristic curves necessary for correct alignment.

BAND ALIGNMENT

The "American Broadcast Band" covers 550 kc. to 1500 kc. This band should be padded at 540 kc. and trimmed at 1400 kc. R.F. and Mixer trimmers should be adjusted for maximum gain at 1400 kc.

The "Day Foreign" band covers from 20 mc. to 10 mc. This band has a fixed padder and should be trimmed at 18 mc. Adjust R.F. and Mixer trimmer for maximum gain at 18 mc.

1938 - 18 TUBE AC MIDWEST RECEIVER

TUBE	PLATE	SCREEN	SUPPRESSOR	CATHODE	HEATER
6K7 R.F. Amp.	200	65	1.5	1.5	6.3
6L7 Mixer	200	65	2	2	6.3
6C5 Osc.	100				6.3
6J7 Osc. Control	120	65	3	3	6.3
6K7 1st I.F.	200	65			6.3
6K7 2nd I.F.	200	65	3	3	6.3
6H6 2nd Det.				4.5*	6.3
6K7 A.F.C. Amp.	200	65	2	2	6.3
6H6 A.F.C. Rect.					6.3
6C5 1st. Audio	100			4.5	6.3
6C5 Phase Inv.	100			4.5	6.3
6V6 Outputs	250	200	Internal Connection	11.5	6.3
#80 Rectifier	350 AC Per plate				6.3
6C5 Tunalite	150AC				6.3

* M2 Band

All voltages taken with 110 V. line voltage and 1000 ohm per volt meter.

Note:- These voltages were taken with no signal input and with the volume control off.

The "Night Foreign" band covers 10.4 mc. to 5.2 mc. This band has a fixed padder and should be trimmed at 10.3 mc. Adjust R.F. trimmer at 5.3 mc. for maximum gain at 10.3 mc.

The "Aviation" band covers from 5.4 mc. to 2.7 mc. This band should be padded at 2.9 mc. and trimmed at 5.3 mc. Adjust the R.F. trimmer at 5.3 mc. for maximum gain.

The "Police" band covers from 3.0 mc. to 1.5 mc. This band should be padded at 1.7 mc. and trimmed at 2.9 mc. Adjust the R.F. trimmer at 2.9 mc. for maximum gain.

The " Weather " band covers from 125 kc. to 350 kc. This band should be padded at 135 kc. and trimmed at 340 kc. The R.F. trimmer should be adjusted at 340 kc. for maximum gain.

Note:- When aligning bands a dummy antenna, consisting of a 200 ohm resistance and 10 mmfd. condenser in parallel, should be connected in series with output of signal generator.

1938 - 20-TUBE AC MIDWEST RECEIVER

TUBE	PLATE	SCREEN	SUPPRESSOR	CATHODE	HEATER
6K7 R.F. Amp.	200	65	1.5	1.5	6.3
6L7 Mixer	200	65	Internal Connection	1.5	6.3
6C5 Oscillator	100				6.3
6J7 Osc. Control	150	65	3	3	6.3
6K7 1st I.F.	200	65			6.3
6K7 2nd I.F.	200	65	3	3	6.3
6H6 2nd Det.				4.5*	6.3
6K7 A.F.C. Amp.	200	65	2	2	6.3
6H6 A.F.C. Rect.					6.3
6C5 1st Audio	100			4.5	6.3
6C5 Phase Inv.	100			4.5	6.3
6K7 Expander	90				6.3
6C5 Expander Control	75		Internal Connection	#	6.3
6V6 Output	275	200		11	6.3
#80 Rectifier	350AC per plate			#350	5V.
6C5 Tunalite	150				6.3

* M2 Band Only
# Zero at Expander positions otherwise 3 Volts

All voltages taken with 110 V. line voltage and 1000 ohm per volt meter.

©John F. Rider, Publisher

MODEL 12-38
MODEL 16-38
Voltage

MIDWEST RADIO CORP.

MODEL 16-37 AFC
AFC 2nd Det. Schematic

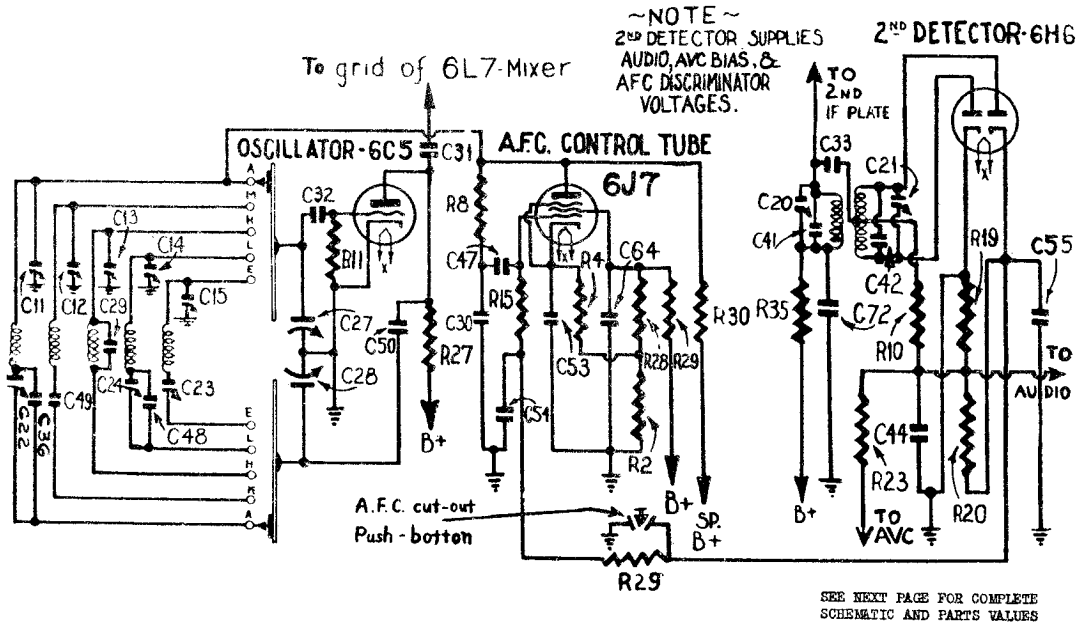

SEE NEXT PAGE FOR COMPLETE SCHEMATIC AND PARTS VALUES

Midwest A.F.C. circut 1637 AFC

1938 - 12 TUBE AC MIDWEST RECEIVER

OPERATING VOLTAGES

Note:- These voltages were taken with no signal input and with the volume control off.

TUBE	PLATE	SCREEN	SUPPRESSOR	CATHODE	HEATER
6K7 R.F Amp.	200	45			6.3
6L7 Mixer	200	45	1.5	1.5	6.3
6C5 Osc.	125				6.3
6J7 Osc. Control	125	95	3	3	6.3
6K7 1st I.F.	200	45			6.3
6K7 2nd I.F.	200	45			6.3
6H6 2nd Det.					6.3
6C8 Phase Inv.	225* 165#			3	6.3
6V6 Outputs	275	200	Internal Connection	11	6.3
#80 Rectifiers	350AC per plate			300	5.0
6C5 Tunalite	145AC				6.3

* Plate #1
# Plate #2

All voltages taken with 110 V. line voltage and 1000 ohm per volt meter.

FOR OTHER DATA SEE INDEX

1938 - 16 TUBE AC MIDWEST RECEIVER

OPERATING VOLTAGES

Note:- These voltages were taken with no signal input and with the volume control off.

TUBE	PLATE	SCREEN	SUPPRESSOR	CATHODE	HEATER
6K7 R.F. Amp.	225	70	1.5	1.5	6.3
6L7 Mixer	225	70	Internal Connection	2	6.3
6C5 Osc.	100				6.3
6J7 Osc. Control	175	70	3	3	6.3
6K7 1st I.F.	225	70			6.3
6K7 2nd I.F.	225	70	3.5	3.5	6.3
6H6 2nd Det.				4.5 *	6.3
6K7 A.F.C. AMP.	225	70		2	6.3
6H6 A.F.C. Rect.					6.3
6C5 1st Audio	100			4.5	6.3
6C5 Phase Inv.	100			4.5	6.3
6V6 Outputs	300	225	Internal Connection	13	6.3
#80 Rectifiers	350AC per plate			350	5.0
6C5 Tunalite	150AC				6.3

* M2 Band Only

All voltages taken with 110 V. line voltage and 1000 ohm per volt meter.

©John F. Rider, Publisher

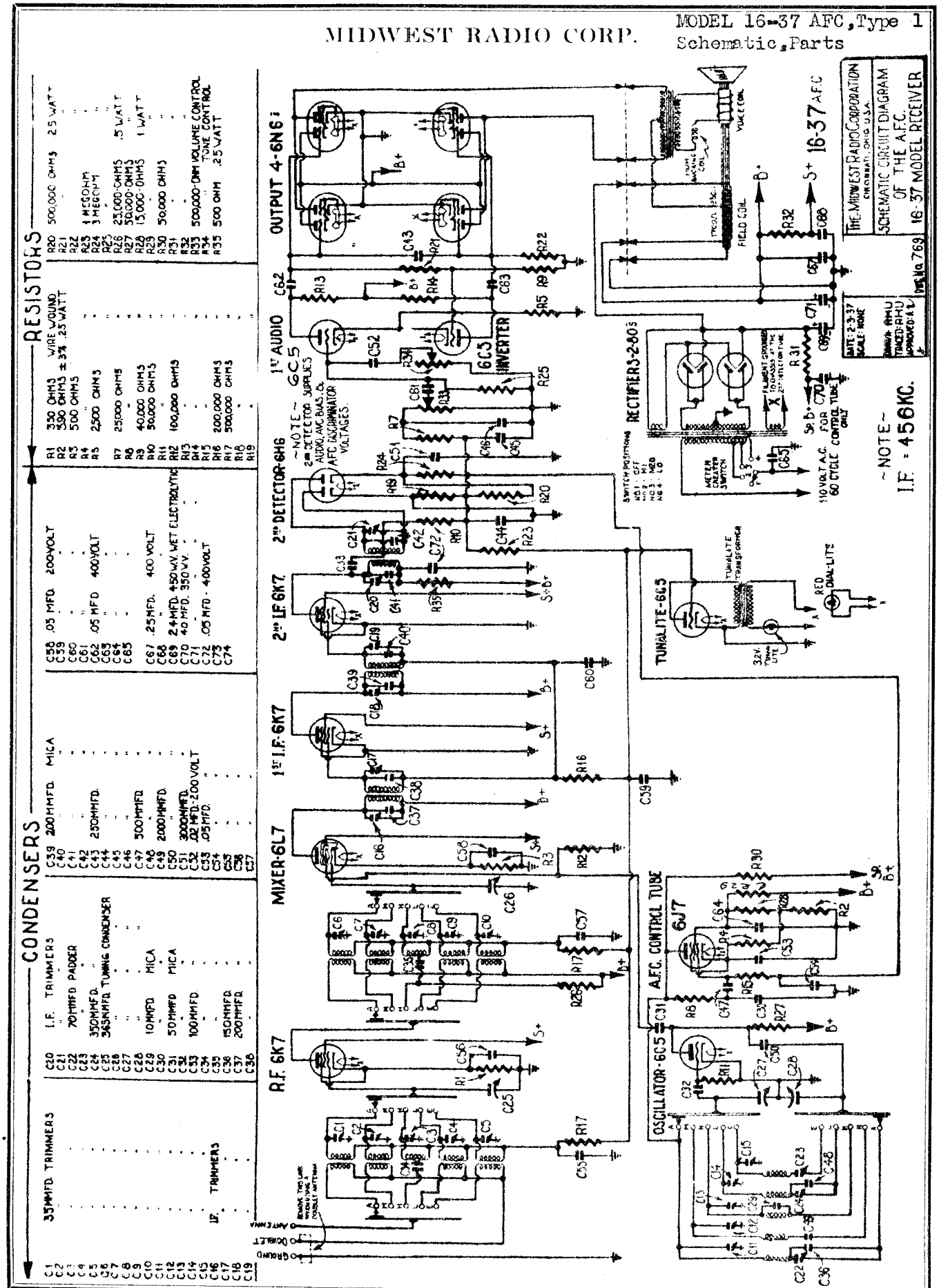

©John F. Rider, Publisher

MODEL 18-37 Early
Socket, Trimmers

MIDWEST RADIO CORP.

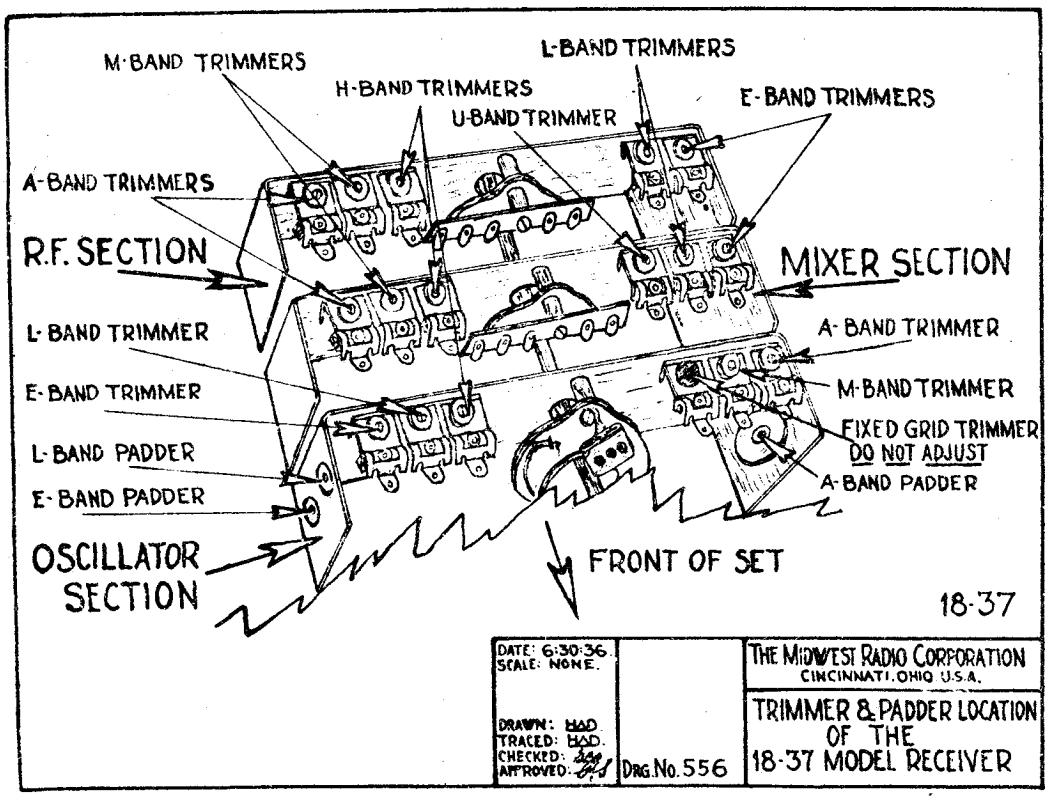

SEE INDEX FOR SCHEMATIC

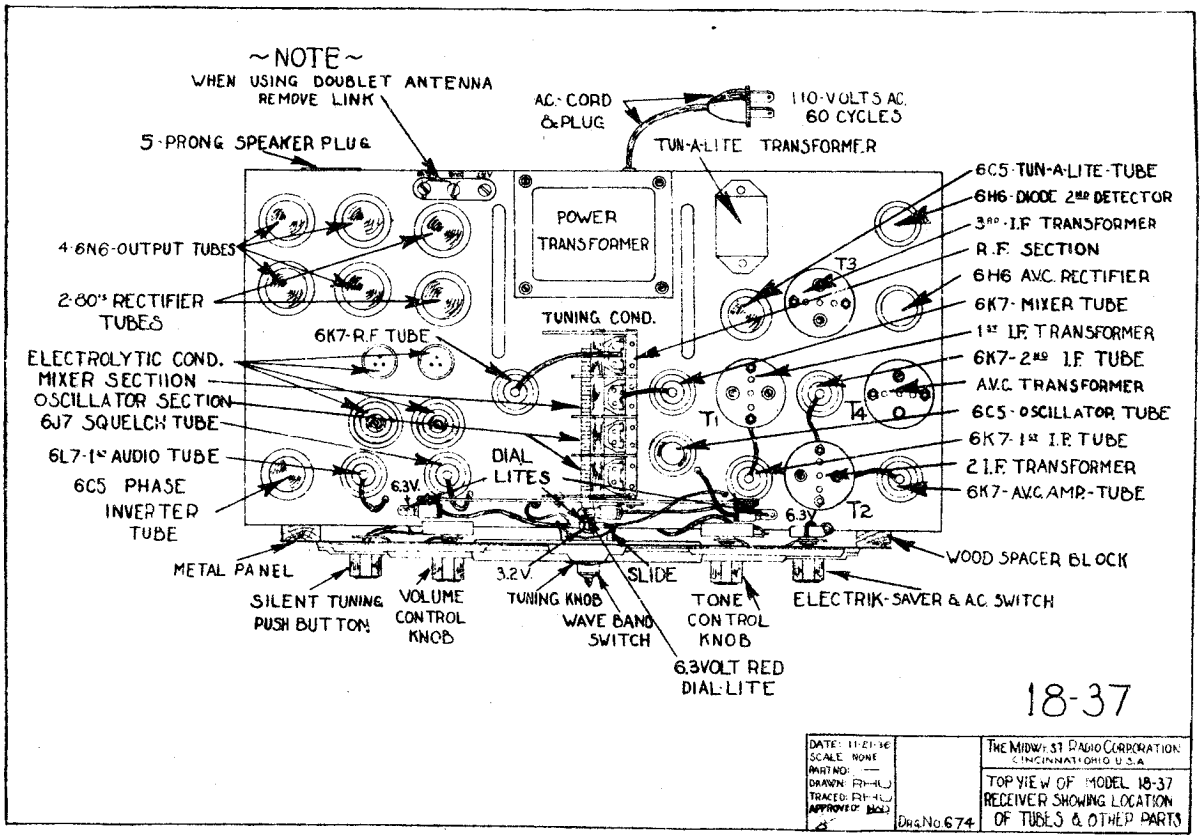

©John F. Rider, Publisher

MIDWEST RADIO CORP.

MODEL 18-37 Early Alignment, Voltage

INSTRUCTIONS FOR ALIGNING THE MIDWEST 18 - 37 RECEIVER

A good signal generator with accurate frequency calibration and an output meter are required. An intermediate frequency of 456 k.c. is used.

(1) Set the signal generator to 456 k.c. and connect it from the mixer grid to ground.

(2) Remove the oscillator tube from the receiver.

(3) Connect the output meter from the plate of the output tube to positive B, or from the plates of one pair of tubes to the plates of the other pair of tubes.

(4) Using a weak signal approximately 40 micro-volts, align the I.F. transformers to maximum output.

(5) Gradually decrease signal and realign I. F. amplifier.

(6) Increase the input from the generator of approximately 100 micro-volts. Align the A.V.C. transformer for minimum output.

(7) Repeat using weaker signal strengths for the I.F. and stronger signal strength for the A.V.C. adjustment until an absolute peak is assured.

This completes the alignment of the I. F. amplifier in the 18 - 37 set.

Insert the oscillator tube. Connect the signal generator between antenna and ground. Connect mixer lead to grid of mixer tube.

(1) Set the wave change switch to the "E" band.

(2) Set the signal generator to 325 k.c., and also the dial.

(3) Adjust the "E" oscillator trimmer to maximum gain, then adjust the "E" band R.F. and the "E" band mixer trimmers for maximum gain.

(4) Reset the signal generator to 135 k.c. and rotate the receiver dial to 135 k.c.

(5) Adjust the "E" band padder for maximum signal.

(6) Repeat the adjustment of trimmers and padders until the adjustment of one does not effect the adjustment of the other.

This completes the alignment of the "E" band.

(1) Set the wave change switch to the "A" band.

(2) Set the signal generator to 1490 k.c.

(3) Adjust the "A" oscillator trimmer to maximum gain, then adjust the "A" band R.F. and the "A" band mixer trimmers for maximum gain.

(4) Reset the signal generator to 550 k.c. and rotate the receiver dial to 550 kc.

(5) Adjust the "A" band padder for maximum signal.

(6) Repeat the adjustment of trimmers and padders until the adjustment of one does not effect the adjustment of the other.

This completes the alignment of the "A" band.

(1) Set the wave change switch to the "L" band.

(2) Set the signal generator to 3.8 m.c.

(3) Adjust the "L" oscillator trimmer to maximum gain, then adjust the "L" band R.F. and the "L" band mixer trimmers for maximum gain.

(4) Reset the signal generator to 1.6 m.c. and rotate the receiver dial to 1.6 m.c.

(5) Adjust the "L" band padder for maximum signal.

(6) Repeat the adjustment of trimmers and padder until the adjustment of one does not effect the adjustment of the other.

This completes the alignment of the "L" band.

(1) Set the wave change switch to the "M" band.

(2) Set the signal generator to 11.5 m.c.

(3) Adjust the "M" oscillator trimmer to maximum gain, then adjust the "M" band R.F. and the "M" band mixer trimmers for maximum gain.

This completes the alignment of the "M" band.

THE MIDWEST RADIO CORPORATION Cincinnati, O.

LIST OF VOLTAGES OF TUBES
37 MODEL 18 TUBE RECEIVER

ALL TESTS MADE WITH NO SIGNAL INPUT

TYPE	POSITION	PLATE V.	SCREEN V.	SUPP. V.	CATHODE V.	FIL. V.
6K7	R.F.	210	50	1.0	1.0	6.5
6K7	Mixer	210	45	3.5	3.5	6.5
6C5	Osc.	95	---	---	3.5	6.5
6K7	1st I.F.	210	50	1.2	1.2	6.5
6K7	2nd I.F.	210	50	3.0	3.0	6.5
6K7	AVC Amp.	210	50	6.0	6.0	6.5
6H6	Audio Rect.	0	---	---	0	6.5
6H6	Audio Rect.	0	---	---	.0 6.0	6.5
6C5	Tunelite	AC	---	---	0	6.5
6J7	Squelch	150	20	AC-0	4.0	6.5
6L7	1st Audio	100	50	---	4.0	6.5
6C5	Inverter	90	---	---	4.0	6.5
6N6	Output	300	---	---	4.0	6.5
6N6	Output	300	---	---	0	6.5
6N6	Output	300	---	---	0	6.5
6N6	Output	300	---	---	0	6.5
80	Rectifier	280AC	---	---	---	5.0
80	Rectifier	280AC	---	---	---	5.0

LINE VOLTAGE 115 VOLTS A.C., 60 CYCLES. B PLUS 225 VOLTS

1000 ohm per volt meter used on all D. C. measurements from ground. Voltages plus or minus 15% depending upon line voltage.

EMC

(1) Set the wave change switch to the "H" band.
(2) Set the signal generator to 28 m.c.
(3) Adjust the "H" band oscillator trimmer to maximum gain, then adjust the "H" band R.F. and the "H" band mixer trimmers for maximum gain.

This completes the alignment of the "H" band.

(1) Set the wave change switch to the "U" band.
(2) Set the signal generator to 60 m.c.
(3) Tune receiver until signal is received.
(4) Adjust the "U" band mixer trimmer for maximum gain.

This completes the alignment of the "U" band.

©John F. Rider, Publisher

MODEL 18-37 AFC
Schematic, Parts

MIDWEST RADIO CORP.

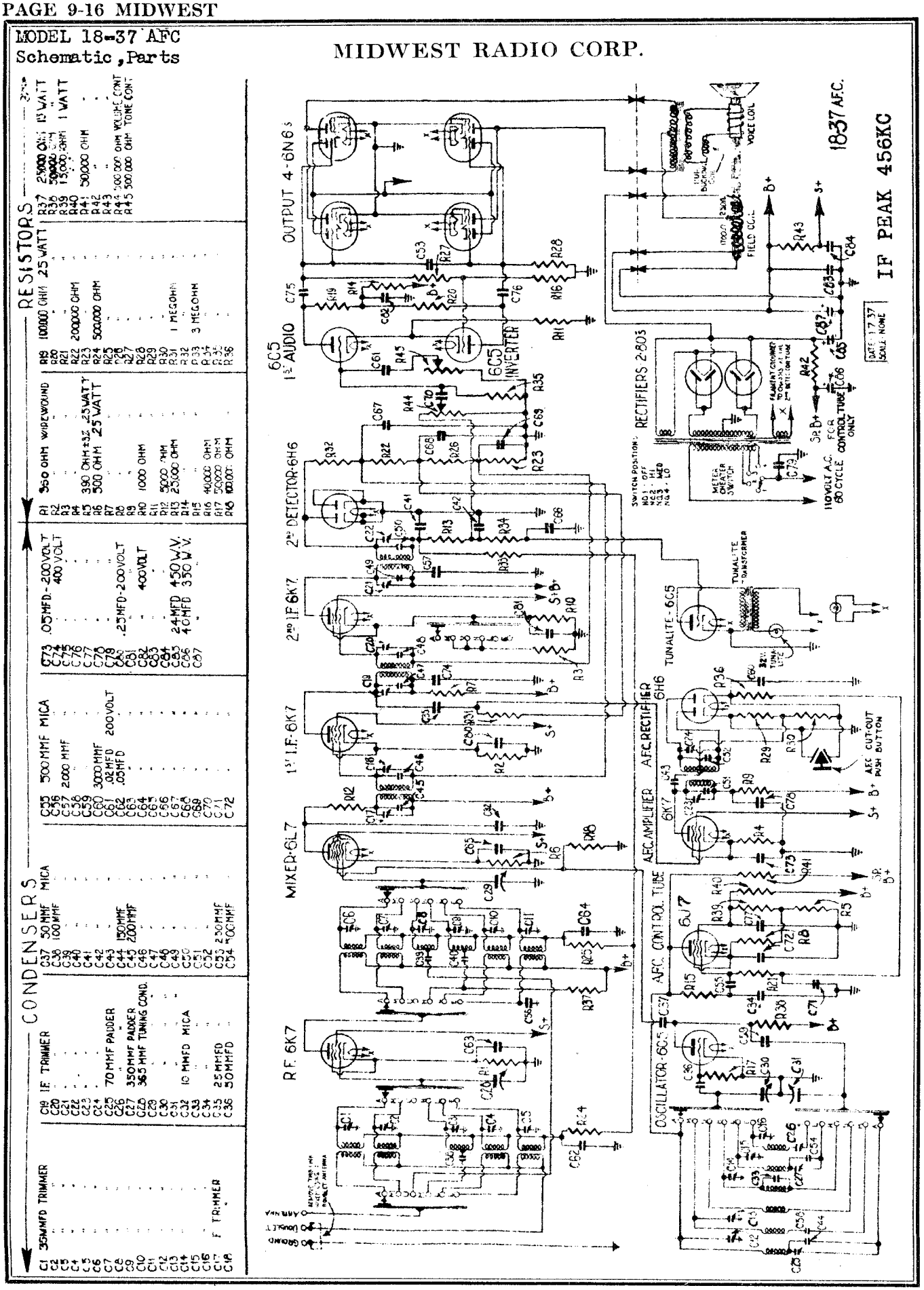

©John F. Rider, Publisher

MIDWEST RADIO CORP.

MODEL 18-37 AFC
Socket, Trimmers
Voltage

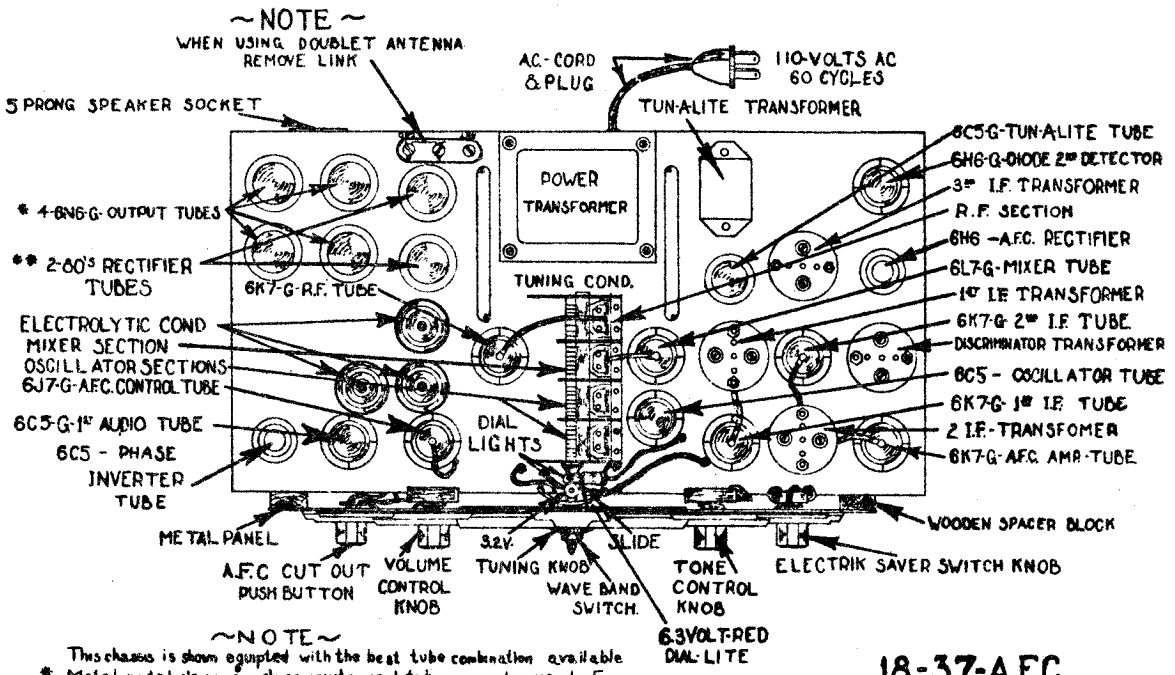

~NOTE~

This chassis is shown equipted with the best tube combination available
* Metal, metal-glass, or glass counter part tubes may be used. For example the output tubes shown are glass counter-part tubes numbered - 6N6-G; metal glass tubes would be numbered - 6N6-MG and metal tubes would be numbered - 6N6.
** Use only 80 type Rectifier tubes.

18-37-A.F.C.

DATE: 1-12-37
SCALE: NONE
Drawing No. 737
THE MIDWEST RADIO CORPORATION CINCINNATI, OHIO, U.S.A.
TOP VIEW OF THE 18-37 A.F.C. MODEL RECEIVER SHOWING LOCATION OF TUBES & OTHER PARTS

THE MIDWEST RADIO CORPORATION Cincinnati, O.

LIST OF VOLTAGES OF TUBES
37 MODEL 18 TUBE A.F.C. RECEIVER

ALL TESTS MADE WITH NO SIGNAL INPUT

TYPE	POSITION	PLATE VOLTS	SCREEN VOLTS	SUPP. VOLTS	CATHODE VOLTS	FIL. VOLTS
6K7	R.F.	210	40	0.8	0.8	6.5
6L7	Mixer	210	40	1.0	1.0	6.5
6C5	Osc.	95	--	---	0	6.5
6K7	1st I.F.	210	40	1.2	1.2	6.5
6K7	2nd I.F.*	210	40	1.0 to 2.0	1.0 to 2.0	6.5
6K7	AFC Amp.	210	40	1.0	1.0	6.5
6H6	2nd Det.	0	--	---	---	6.5
6H6	A.F.C. Rect.	0	--	---	---	6.5
6C5	Tunalite	AC	--	---	0	6.5
6J7	Control	160	90	4.0	4.0	6.5
6C5	1st Audio	60	--	---	2.5	6.5
6C5	Invertor	60	--	---	2.5	6.5
6N6	Output	300	210	---	0	6.5
6N6	Output	300	210	---	0	6.5
6N6	Output	300	210	---	0	6.5
6N6	Output	300	210	---	0	6.5
80	Rectifier	280AC	---	---	---	5.0
80	Rectifier	280AC	---	---	---	5.0

* 1.0 Volt Bias When On "M"-"U" and "H" bands.

LINE VOLTAGE 115 VOLTS A.C. 60 CYCLES

1000 ohm per volt meter used on all D.C. measurements from ground. Voltage plus or minus 15% depending upon line voltage.

©John F. Rider, Publisher

MODEL 18-37 AFC
MODEL Regal-37 AFC
Alignment, Trimmers

MID-WEST RADIO CORP.

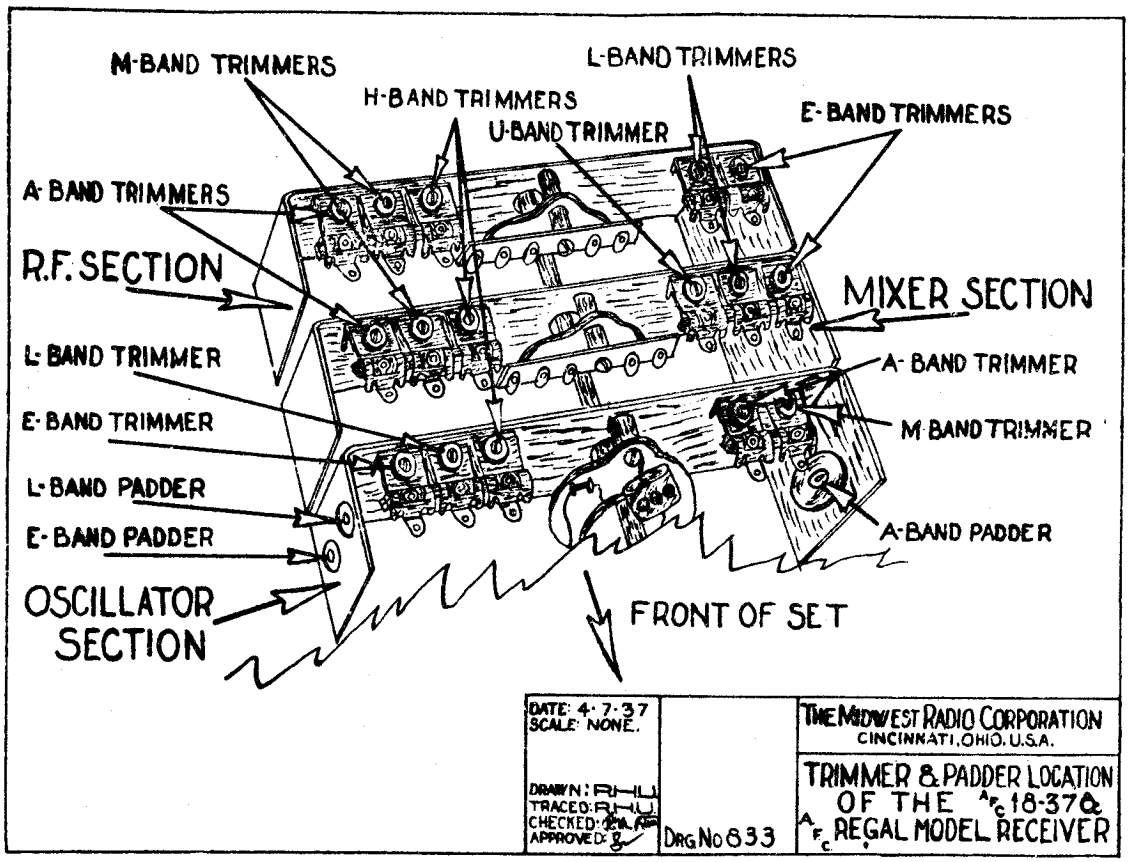

INSTRUCTIONS FOR ALIGNING THE MIDWEST 18-37 A.F.C. RECEIVER AND A.F.C. REGAL (1937)

A good signal generator with accurate frequency calibration, and output meter, and a 0-10 DC milliameter are required. An intermediate frequency of 456 kc is used.
(1) Remove grid cap from mixer tube. Set the signal generator to 456 kc and connect it from the mixer grid to ground
(2) Remove the oscillator tube from the receiver.
(3) Connect the output meter from the plate of the output tube to Positive B, or from the plates of one pair of tubes to the plates of the other pair of tubes.
(4) Using as weak a signal as will give a definite reading on the output meter, align the I.F. transformer for maximum output.
(5) Decrease the input signal and realign.
(6) Connect the 0-10 milliameter in series with the cathode of the 6J7 A.F.C. control tube.
(7) Turn off A.F.C. by pressing push button. If meter kicks up or down adjust plate trimmer for maximum deflection, either up or down, from the false zero. If no kick is noted turn diode trimmer slightly (about 1/8 turn) and proceed as above.
(9) Adjust diode trimmer for false zero.
(10) Flip A.F.C. off and on noting reading of milliameter. If meter kicks up or down the diode trimmer is not properly aligned. This adjustment is very critical and must be done very carefully if the A.F.C. is to function properly.
This completes the alignment of the I.F. Amplifier.

Insert the oscillator tube. Connect the signal generator between antenna and ground. Connect the mixer lead to grid of mixer tube. Turn off A.F.C. by depressing push button.
(1) Set the wave change switch to the "E" band.
(2) Set signal generator and dial to 340 kc.
(3) Adjust "E" oscillator trimmer to peak and adjust R.F. and mixer trimmers for maximum gain.
(4) Reset signal generator and dial to 135 kc.
(5) Adjust "E" padder for peak.
(6) Repeat adjustment of oscillator trimmer and padder until one does not effect the other.
This completes the alignment on the "E" band.
(1) Set wave change switch to "A" band.
(2) Set signal generator and dial to 1490 kc.
(3) Adjust "A" oscillator trimmer for peak and adjust R.F. and mixer trimmers for maximum gain.
(4) Reset signal generator and dial to 550 kc.
(5) Adjust "A" padder for peak.
(6) Repeat adjustment of oscillator trimmer and padder until one does not effect the other.
This completes alignment of the "A" band.
(1) Set wave change switch to "L" band.
(2) Set signal generator and dial to 4 mc.
(3) Adjust "L" oscillator trimmer for peak and adjust R.F. and mixer trimmers for maximum gain.
(4) Reset signal generator and dial to 1.8 mc.
(5) Adjust "L" padder for peak.
(6) Repeat adjustment of "L" oscillator trimmer and padder until one does not effect the other.
This completes the alignment of the "L" band.
(1) Set wave change switch to "M" band.
(2) Set signal generator and dial to 11.5 mc.
(3) Adjust "M" oscillator trimmers for maximum gain.
This completes the alignment of the "M" band.
(1) Set wave change switch to "H" band.
(2) Set signal generator and dial to 26 mc.
(3) Adjust "H" oscillator trimmer to fundamental peak and adjust R.F. and mixer trimmers for maximum gain.
This completes the alignment of the "H" band.
(1) Set wave change switch to "U" band.
(2) Set signal generator switch to "U" band.
(3) Turn dial generator to 60 mc.
(4) Adjust "U" mixer trimmer for maximum gain.
This completes the alignment of the receiver.

©John F. Rider, Publisher

MODEL Regal-37 AFC
Schematic, Parts

MIDWEST RADIO CORP.

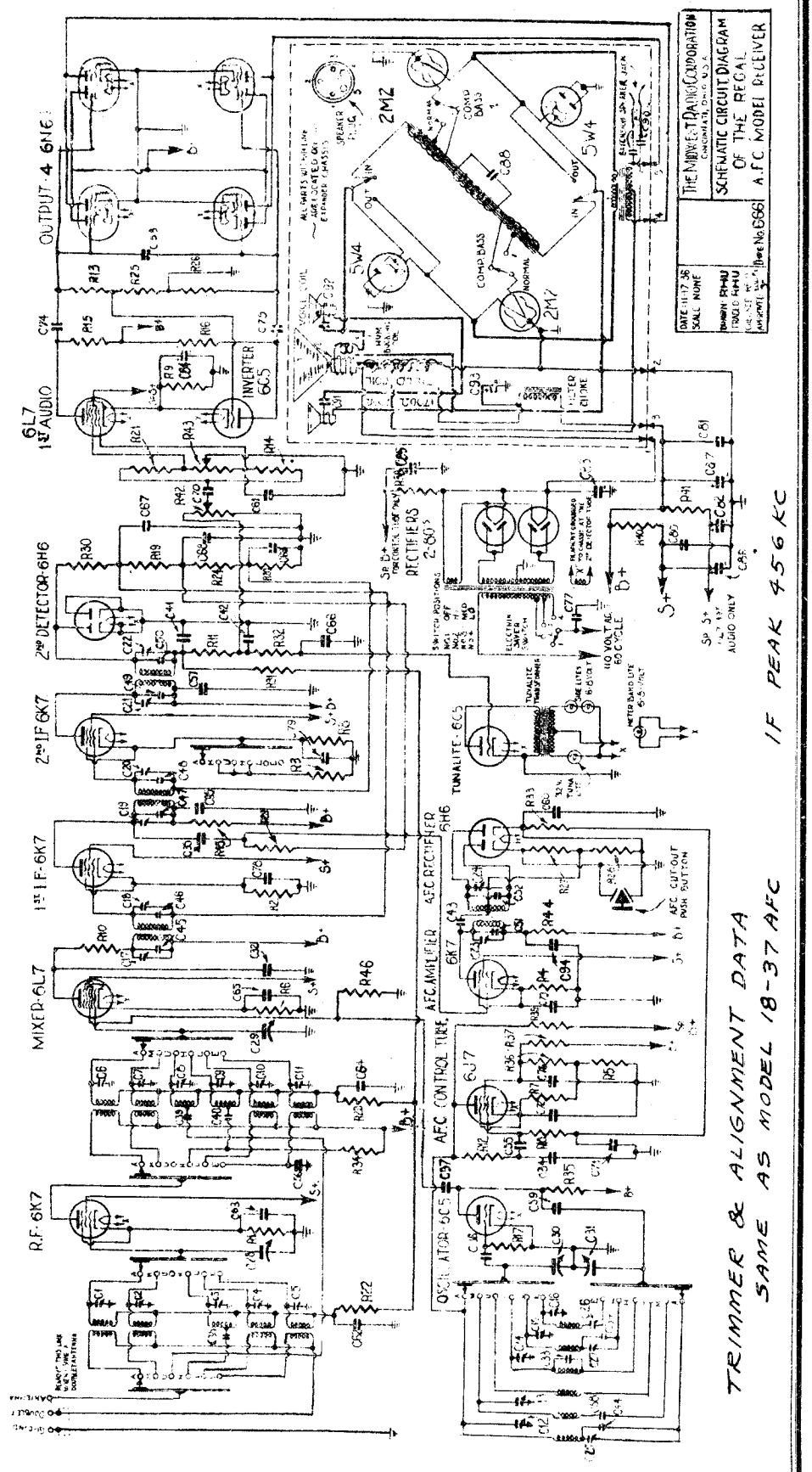

©John F. Rider, Publisher

MODEL Regal-37 AFC
Socket, Trimmers
Voltage

MIDWEST RADIO CORP.

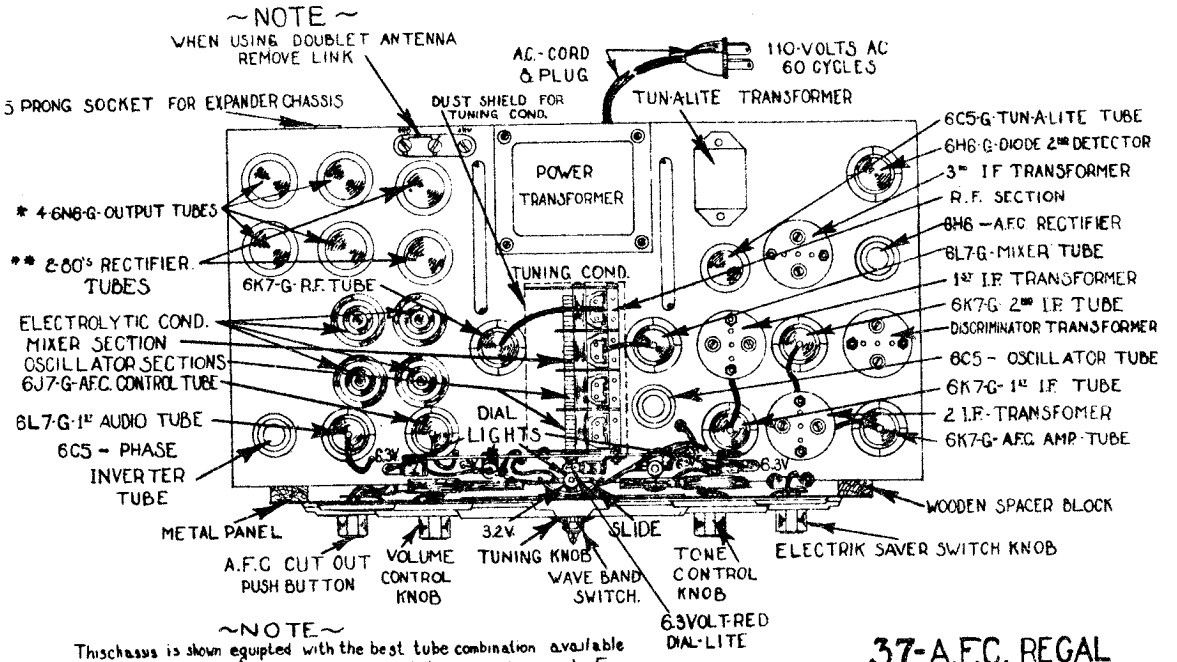

~NOTE~

Thischassis is shown equipted with the best tube combination available
* Metal, metal-glass, or glass counterpart tubes may be used. For example the output tubes shown are glass counter-part tubes numbered - 6N6-G; metal glass tubes would be numbered - 6N6-MG and metal tubes would be numbered - 6N6.
** Use only 80 type Rectifier tubes.

37-A.F.C. REGAL

DATE: 12-18-38 SCALE: NONE PART NO. — DRAWN: RHU TRACED: RHU APPROVED:	Drg. No. 747	THE MIDWEST RADIO CORPORATION CINCINNATI, OHIO, U.S.A. TOP VIEW OF THE REGAL A.F.C. MODEL RECEIVER SHOWING LOCATION OF TUBES & OTHER PARTS

THE MIDWEST RADIO CORP. CINCINNATI, OHIO

LIST OF TUBE VOLTAGES OF 37 MODEL REGAL RECEIVER

ALL TESTS MADE WITH NO SIGNAL INPUT

TYPE	POSITION	PLATE VOLTS	SCREEN VOLTS	SUPP. VOLTS	CATHODE VOLTS	FIL VOLTS
6K7	R. F.	210	50	1.0	1.0	6.5
6K7	Mixer	210	45	3.5	3.5	6.5
6C5	Osc.	95	--	---	3.5	6.5
6K7	1st I.F.	210	50	1.2	1.2	6.5
6K7	2nd I.F.	210	50	3.0	3.0	6.5
6K7	AVC Amp.	210	50	6.0	6.0	6.5
6H6	2nd Det.	0	--	---	0	6.5
6H6	Audio Rect.	0	--	---	6.0	6.5
6C5	Tunalite	AC	--	---	0	6.5
6J7	Squelch	150	20	AC-0	4.0	6.5
6L7	1st Audio	100	50	---	4.0	6.5
6C5	Inverter	90	--	---	4.0	6.5
6N6	Output	300	--	---	4.0	6.5
6N6	Output	300	--	---	0	6.5
6N6	Output	300	--	---	0	6.5
6N6	Output	300	--	---	0	6.5
80	Rect.	280AC	--	---	---	5.0
80	Rect.	280AC	--	---	---	5.0
2M2	Var. Res.	---	--	---	---	---
2M2	Var. Res.	---	--	---	---	---
5W4	Fixed Res.	---	--	---	---	---
5W4	Fixed Res.	---	--	---	---	---

LINE VOLTAGE 115 VOLTS A.C. 60 CYCLES. B PLUS 225 VOLTS

1000 Ohm per volt meter used on all D. C. measurements from ground. Volume control at maximum position.

RM

©John F. Rider, Publisher

MONTGOMERY WARD & CO.

MODEL 62-34, Washington
Schematic, Voltage
Socket, Trimmers

25 CYCLE CHASSIS

The 25 Cycle chassis use 25 Cycle Power Transformer, Part No. U 3974 instead of Power Transformer U 3925 and choke condenser No. U 1375 instead of U 2854.

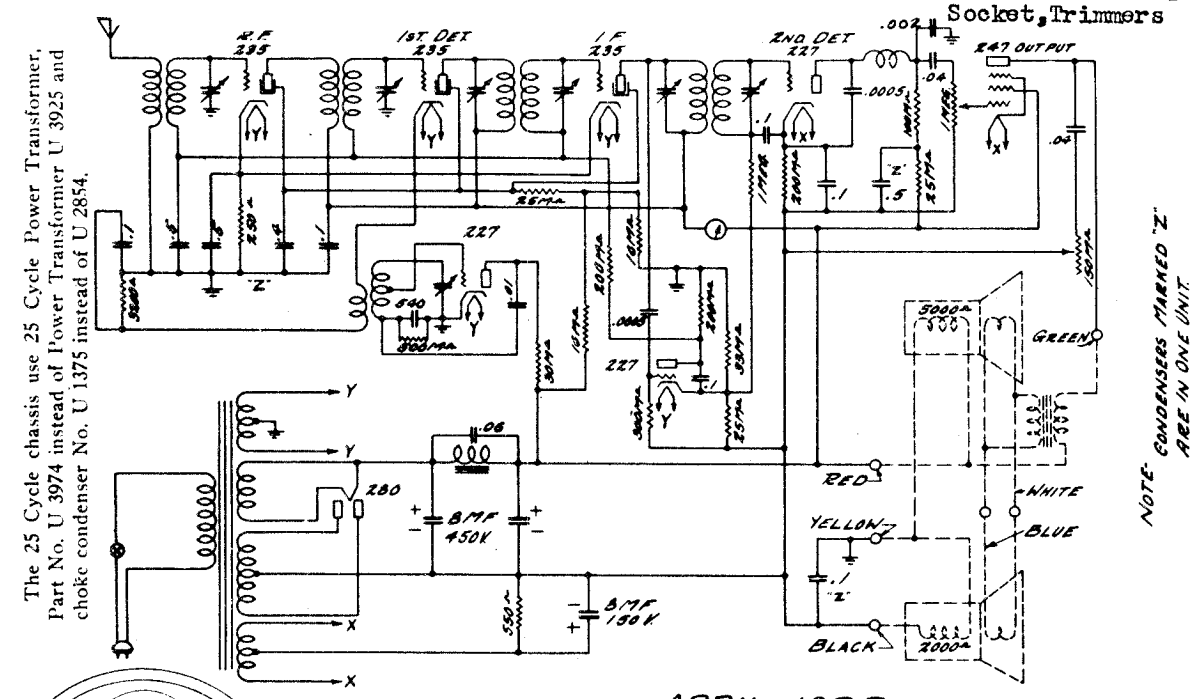

APRIL 1932

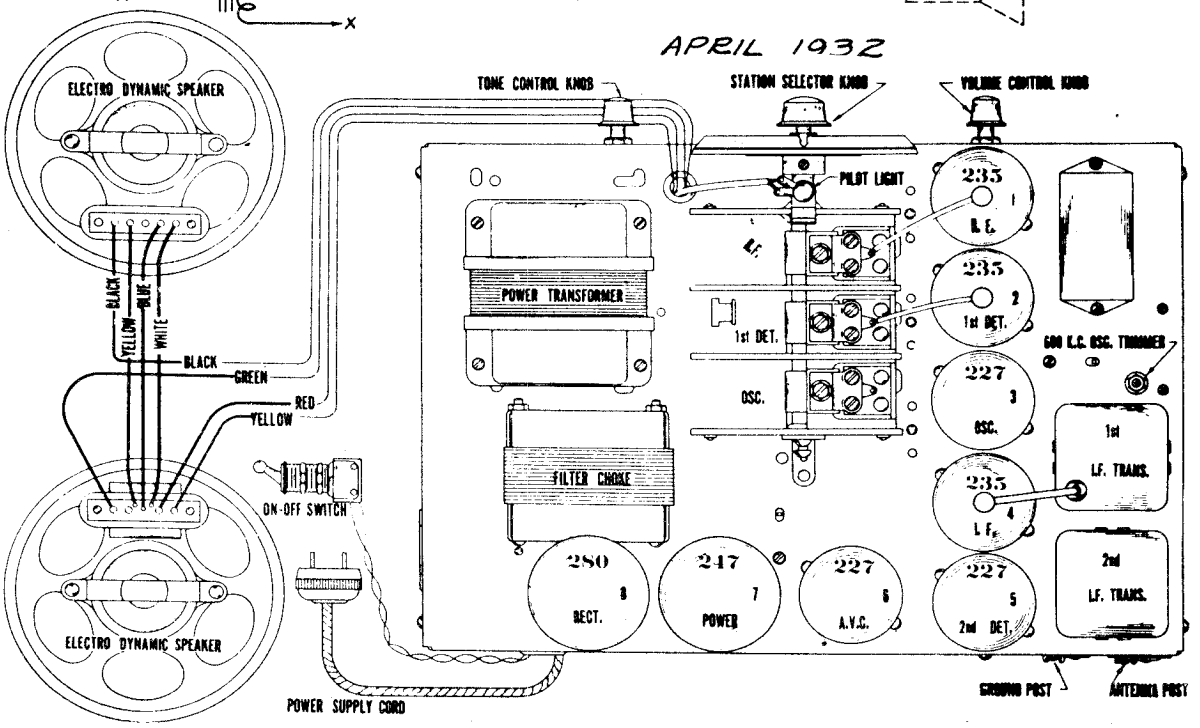

SCHEMATIC DIAGRAM FOR EIGHT TUBE DUAL SPEAKER WASHINGTON MODEL No. 62-34.

VOLTAGES AT SOCKETS—LINE VOLTAGE 115 VOLTS

Type of Tube	Position of Tube	Function	"A" Volts	"B" Volts	Control Grid "C" Volts	Screen Volts	Screen Current MA	Cathode Volts	Plate Current MA	Grid Test
235	1	R. F.	2.3	185	.4	45	.4	2.0	2.3	4.
235	2	1st Det.	2.3	185	5.4	42	.4	5.4	1.0	1.4
227	3	Osc.	2.3	105	10-25 (1)	.....	.....	.....	3.1	3.2
235	4	I. F.	2.3	185	.4	45	.4	2.	2.3	4.
227	5	2nd Det.	2.35	145	10.	.....	.....	.....	.4	.4
227	6	A.V.C.	2.25	80 (2)	45. (3)	.....	.....	.....	.....	.....
247	7	Power	2.45	265	19. (4)	290	5.	.....	29.	32.
280	8	Rect.	5.0	.....	.....	.....	.....	.....	42. Per Plate	.....

(1) Measured across 500 M ohm osc. bias resistor. Bias voltage varies from 10—25 volts between 1500 and 550 K. C.
(2) Measured from B— to A.V.C. plate
(3) Measured from B— to A.V.C. cathode.
(4) Measured from B— to X fil. across 550 ohm resistor.

©John F. Rider, Publisher

MODELS 62-230, 62-240
Schematic, Voltage
Socket, Trimmers, Alignment

MONTGOMERY WARD & CO.

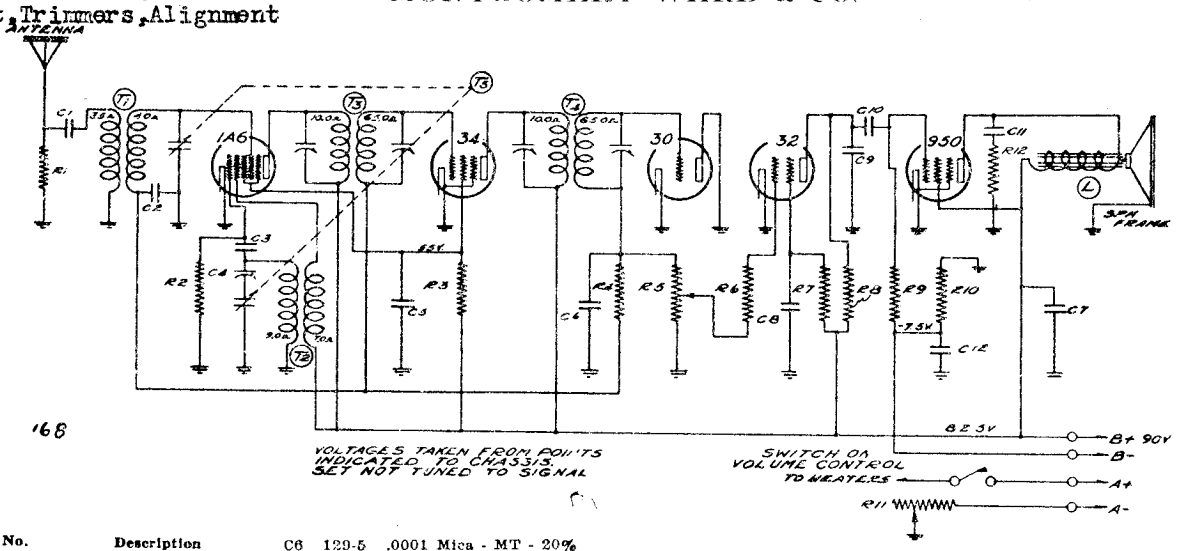

No.	Part No.	Description
		RESISTORS
R1	130-17	10M Ohm - ½ Watt - 20% - 20 Volt - Carbon
R2	130-52	50M Ohm - ½ Watt - 20% - 10 Volt - Carbon
R3	130-17	10M Ohm - ½ Watt - 20% - 20 Volt - Carbon
R4	130-38	2 Meg Ohm - ½ Watt - 20% 100 Volt - Carbon
R5	101-43	1 Meg Ohm Volume Control and Switch
R6	130-52	50M Ohm - ½ Watt - 20% 10 Volt - Carbon
R7	130-19	1 Meg Ohm - ½ Watt - 20% 100 Volt - Carbon
R8	130-9	200M Ohm - ½ Watt - 20% - 20 Volt - Carbon
R9	130-19	1 Meg Ohm - ½ Watt - 20% 100 Volt - Carbon
R10	130-03	450 Ohm - ½ Watt - 10% 10 Volt - Carbon
R11	101-44	4.75 Ohms - Rheostat
R12	130-52	50M Ohm - ½ Watt - 20% 10 Volt - Carbon
C6	129-5	.0001 Mica - MT - 20%
C7	100-6	.25 x 200 Volt
C8	100-9	.05 x 200 Volt - 25%
C9	129-2	.0005 Mica - MT - 20%
C10	100-11	.01 x 400 Volt - 25%
C11	100-11	.01 x 400 Volt - 25%
C12	119-22	10.0 Mfd. x 25 Volts - Working Voltage
		PARTS
T1	111-46	Antenna Coil
T2	110-36	Oscillator Coil
T3	108-67	Input I.F. Coil 465 K.C.
T4	108-68	Output I.F. Coil 465 K.C.
T5	102-29	Two Gang Condenser
L	114-19	Six Inch Magnetic Speaker
		CONDENSERS
C1	100-11	.01 x 400 Volt - 25%
C2	100-22	.05 x 200 Volt - 25%
C3	129-12	.00025 Mica - MT - 20%
C4	124-14	Series Pad
C5	100-9	.05 x 200 Volt - 25%

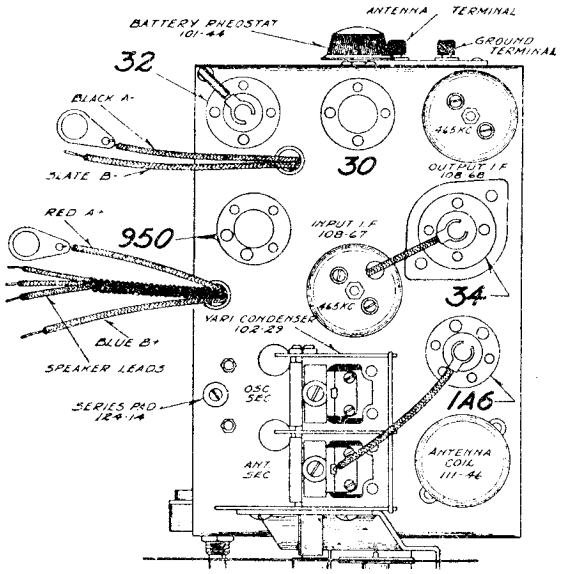

Serial No. 6C225276 and up

DESCRIPTION

TUBES:

The tube complement of this chassis is as follows:

1 Type 1A6—first detector oscillator.
1 Type 34—I.F. amplifier. 465 K. C.
1 Type 30—second detector. A. V. C.
1 Type 32—audio.
1 Type 950—output.

SERVICE NOTES

Voltages taken from different points of circuit to chassis are measured with volume control full on, all tubes in their sockets and speaker connected, with a volt meter having a resistance of 1000 ohms per volt.

All voltages as indicated on diagram, are measured with a new set of batteries.

Resistances of coil windings are indicated in ohms on the schematic circuit diagram.

To check for open by-pass condensers, shunt each condenser with another condenser of the same capacity and voltage rating, which is known to be good, until the defective unit is located.

ALIGNING INSTRUCTIONS

CAUTION: No aligning adjustments should be attempted without first thoroughly checking over all other possible causes of trouble, such as run down batteries, defective tubes, poor installations, open or grounded antenna systems, defective condensers and resistors.

In order to properly align this chassis, an oscillator (generator) is necessary.

All adjustments should be made with a non-metallic screw driver.

ALIGNING I.F. TRANSFORMERS: (465 K.C.)

1. With volume control full on and with variable condenser at its minimum capacity position, plates entirely out of mesh, and with external oscillator set at 465 K.C. connected in series with a .1 mfd. condenser, to the grid of the 1A6 tube (cap at top of tube), adjust I.F. transformers, parts number 108-67 and 108-68, to resonance. Both of these transformers have two (2) adjustments each, they are accessible from the tops of the cans (for location see top view).

   Use as a resonance indicator an output meter connected across the outside terminals of the speaker or by means of an adapter to the plate and screen of the type 950 output tube. Maximum deflection of the volt meter indicates resonance.

   Use only enough signal to get a readily readable output.

   A low range output meter or the low scale of a multi-range meter should be used.

BROADCAST BAND ALIGNMENT:

1. Set external oscillator to 1720 K.C. and connect it in series with a 200 mmfd. condenser to the antenna and ground posts.
   (a) With variable condenser in its minimum capacity position, plates entirely out of mesh, adjust oscillator trimmer (rear section of variable condenser) to resonance.
   (b) Re-set external oscillator to 1400 K.C. Rotate variable condenser, pick up signal and adjust antenna trimmer (front section of variable condenser) to resonance.
   (c) Re-set external oscillator to 600 K.C., move dial pointer to 600 K.C., and adjust series pad, part number 124-14 (see top view), to resonance. While making this adjustment, slowly rock variable condenser to and fro until maximum output is obtained.
   (d) Check for sensitivity at 1400, 1000, 600 K.C. DO NOT BEND PLATES.

©John F. Rider, Publisher

MONTGOMERY-WARD & CO.

MODELS 62-251,62-255,62-328
62-338,62-428
Schematic,Socket,Trimmers
Parts

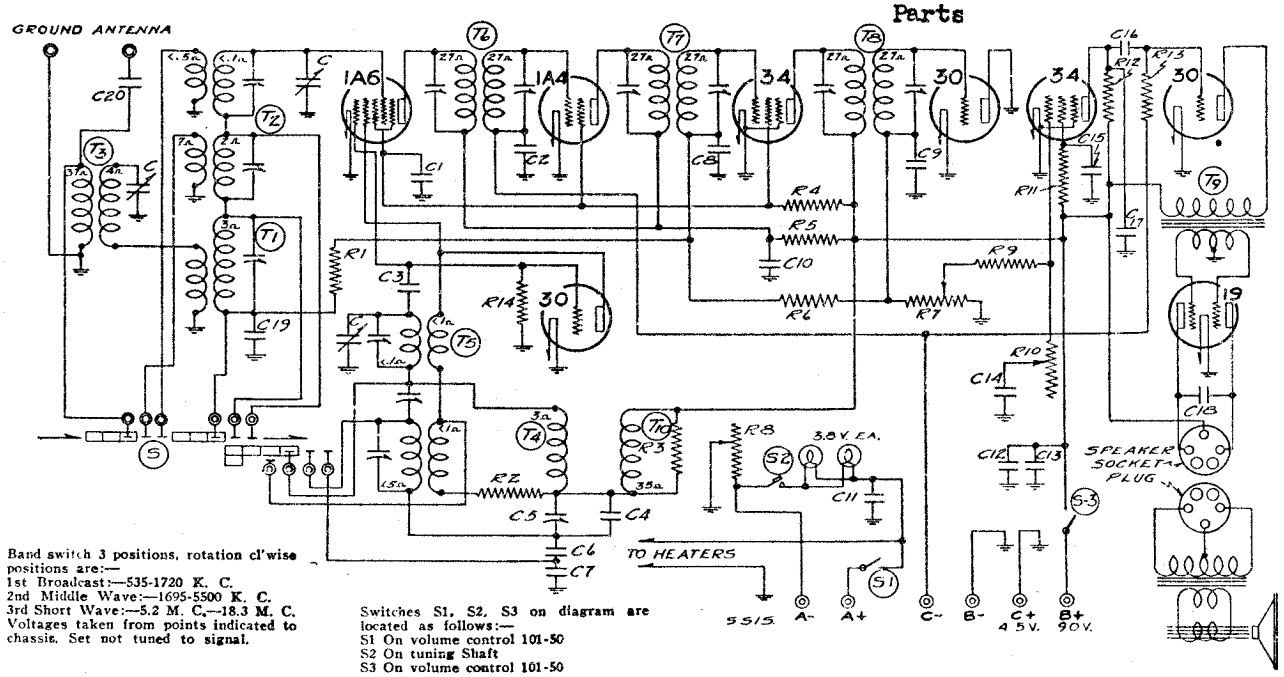

Band switch 3 positions, rotation cl'wise positions are:—
1st Broadcast:—535-1720 K. C.
2nd Middle Wave:—1695-5500 K. C.
3rd Short Wave:—5.2 M. C.—18.3 M. C.
Voltages taken from points indicated to chassis. Set not tuned to signal.

Switches S1, S2, S3 on diagram are located as follows:—
S1 On volume control 101-50
S2 On tuning Shaft
S3 On volume control 101-50

LIST OF REPAIR PARTS (Serial No. 6E 247201 and up)

Use Only Genuine Factory Replacement Parts

Part No.	Schematic Reference	Description	No. Used In Set	Selling Price Each
		CONDENSERS		
BE 100-5B	C11	1.0 x 120 Volt Tubular with Bracket	1	.30
BE 100-6	C1	.25 x 200 Volt Tubular less Bracket	1	.15
BE 100-6B	C13	.25 x 200 Volt Tubular with Bracket	1	.15
BE 100-11	C14, C15, C20	.01 x 400 Volt Tubular	3	.09
BE 100-20	C10	.1 x 200 Volt Tubular	1	.11
BE 100-22	C2, C8, C15, C19	.05 x 200 Volt Tubular	4	.10
BE 100-25	C18	.002 x 600 Volt Tubular	1	.09
BE 103-11	C12	8 Mfd. x 200 Volt Electrolytic	1	.40
BE 129-5	C17	.0001 Mica—Type MT—20%	1	.09
BE 129-12	C9	.00025 Mica—Type MT—20%	1	.12
BE 129-50	C3	.00004 Mica—Type MT—30%	1	.09
BE 129-54	C7	.003 Mica—Type MW—2½%	1	.25
BE 129-55	C6	.0034 Mica—Type MW—2½%	1	.25
BE 129-65	C4	.00055 Mica—Type MT—5%	1	.10
		RESISTORS		
BE 130-11	R12	250M Ohm—⅛ Watt—20%—50 Volt Carbon	1	.08
BE 130-12	R3, R9, R14	50M Ohm—½ Watt—20%—20 Volt Carbon	3	.08
BE 130-19	R6, R11, R13	1 Meg Ohm—⅛ Watt—20%—100 Volt Cabron	3	.08
BE 130-20	R1	100M Ohm—⅛ Watt—20%—50 Volt Carbon	1	.08
BE 130-27	R2	50 Ohm—½ Watt—20%—3 Volt Carbon	1	.10
BE 130-31	R5	1500 Ohm—½ Watt—20%—10 Volt Carbon	1	.08
BE 130-109	R4	7500 Ohm—½ Watt—20%—50 Volt Carbon	1	.08
		COILS		
BE 108-77	T6	Input I.F. complete with Can	1	.60
BE 108-78	T7	Interstage I.F. complete with Can	1	.60
BE 108-79	T8	Output I.F. complete with Can	1	.60
BE 110-38	T4	Broadcast Oscillator Coil Complete	1	.35
BE 110-39	T5	Mid-Wave & Short Wave Oscillator Coil Comp.	1	.75
BE 111-49	T1	Broadcast Antenna Coil Assembly Complete	1	.40
BE 111-50	T2	Mid.-Wave & Short Wave Antenna Coil Assem. Comp.	1	.80
BE 111-51	T3	Broadcast Preselector Coil	1	.35
BE 123-3	T10	R.F. Choke Coil	1	.20
		SOCKETS		
BE 121-6		Six Prong Socket—Marked "1A6"	1	.09
BE 121-6		Six Prong Socket—Marked "19"	1	.09
BE 121-8		Five Prong Socket—Marked "Spkr"	1	.08
BE 121-9		Four Prong Socket—Marked "34"	2	.08
BE 121-9		Four Prong Socket—Marked "30"	3	.08
BE 121-9		Four Prong Socket—Marked "1A4"	1	.08
		SPEAKERS		
BE 114-38		Six Inch Permanent Magnet Dynamic (Mantle)	1	3.50
BE 114-39		Eight Inch Permanent Magnet Dynamic(Console)	1	3.80
		MISCELLANEOUS		
BE 101-50	R7	Volume Control and Switch (250 M ohm)	1	.60
BE 101-51	R10	Tone Control (300 M ohm)	1	.40
BE 101-52	R8	Filament Rheostat (2 ohm)	1	.30
BE 102-28	C	Three Gang Variable Condenser	1	2.50
BE 105-28	T9	Audio Input Transformer	1	1.00
BE 113-34		Ant.-Gnd. Strip	1	.10
BE 115-35		Antenna,-Oscillator, Shield	2	.12
BE 115-46		Shield Cap for Part 115-49	2	.02
BE 115-49		Tube Shield for Types 1A4—1A6 Tubes	2	.10
BE 115-55		Tube Shield for Type 34 Tube	1	.10
BE 124-28	C5	J-3 Series Pad	1	.16
BE 125-17	S	Band Switch	1	.35
BE 128-44		"Volume" Knob with Spring—Wood	1	.08
BE 128-45		"Tone" Knob with Spring—Wood	1	.08
BE 128-46		"Band Switch" Knob with Spring—Wood	1	.08
BE 128-47S		"Tuning" Knob with Set Screw—Wood	1	.08
BE 131-12		Bakelite Knob with Arrow	1	.07

FOR ALIGNMENT, SEE INDEX

TUBES:

The tube complement of this chassis is as follows:

1—Type 1A6 Pentagrid Mixer, First Detector.
1—Type 1A4 Tetrode First I.F. Amplifier (465 K.C.)
1—Type 34 Remote Cut-Off Pentode, 2nd I.F. Amplifier (465 K.C.)
1—Type 30 Oscillator.
1—Type 30 Second Detector and A. V. C.
1—Type 34 A.F. Amplifier.
1—Type 30 Driver Amplifier.
1—Type 19 Class "B" Push-Pull Output Amplifier.

FOR ALIGNMENT SEE INDEX

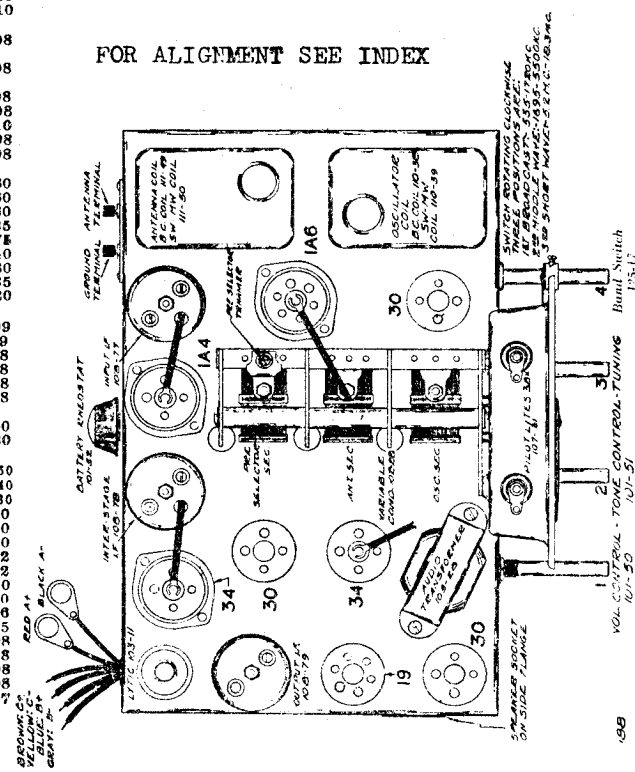

©John F. Rider, Publisher

MODEL 62-264
Schematic, Voltage, Parts
Socket, Trimmers, Alignment

MONTGOMERY-WARD & CO.

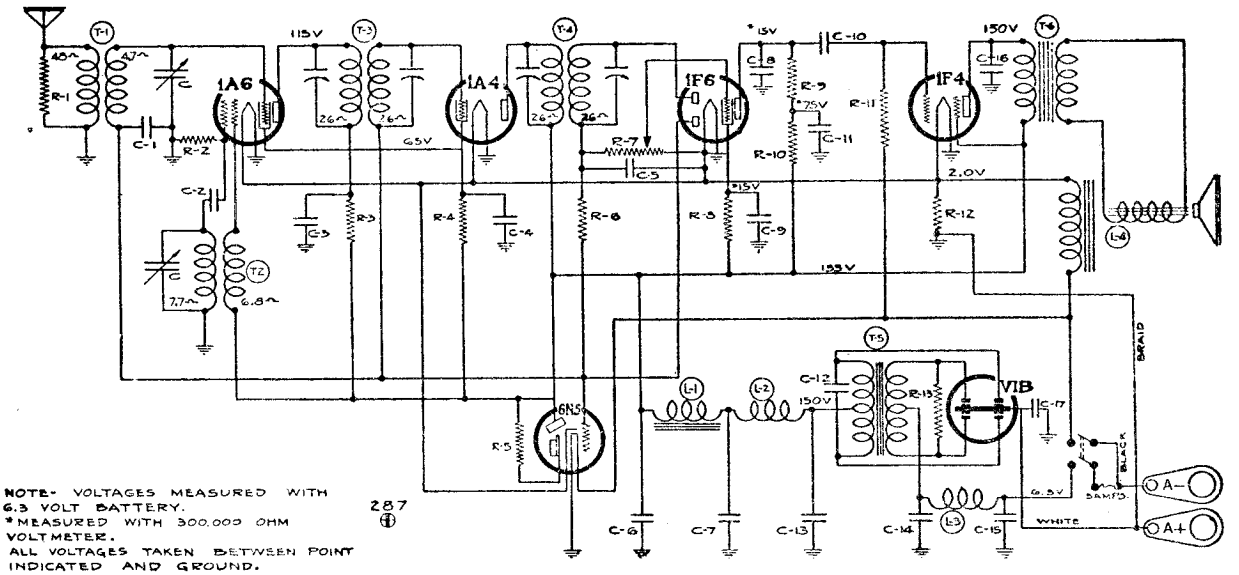

NOTE- VOLTAGES MEASURED WITH 6.3 VOLT BATTERY.
*MEASURED WITH 300,000 OHM VOLTMETER.
ALL VOLTAGES TAKEN BETWEEN POINT INDICATED AND GROUND.

287

No.	Part No.	Description
		Condensers
C1	100-22	.05x200 v.
C2	129-21	.0002 Mica
C3	100-9	.05x200 v.
C4	100-20	.1x200 v.
C5	129-12	.00025 Mica
C6	119-31	5.0x200 v. lytic
C7	119-31	5.0x200 v. lytic
C8	129-5	.0001 Mica
C9	100-20	.1x200 v.
C10	100-26	.02x400 v.
C11	100-9	.05x200 v.
C12	100-34	.005x1200 v.
C13	100-20	.1x200 v.
C14	100-40	.5x200 v.
C15	100-40	.5x200 v.
C16	100-19	.006x600 v.
C17	100-35	.5x200 v.
		RESISTORS
R1	130-132	10M ohm—1/3 W. Insulated
R2	130-12	50M ohm—1/3 W.
R3	130-17	10M ohm—1/3 W.
R4	130-133	15M ohm—½ W.
R5	130-110	1 megohm—1/10 W.
R6	130-4	3 megohm—1/3 W.
R7	101-64	1 megohm—Volume Control
R8	130-134	1 megohm—1/3 W. Insulated
R9	130-100	150M ohm—1/3 W.
R10	130-135	150M ohm—1/3 W. Insulated
R11	130-37	750M ohm—1/3 W.
R12	105-32	3.5 ohm—½ W.
R13	130-136	200 ohm Insulated—1/2 W.
		MISCELLANEOUS PARTS
T1	111-58	Antenna Coil
T2	110-51	Oscillator Coil
T3	108-89	Input I. F.
T4	108-90	Output I. F.
T5	104-79	Power Transformer
T6	114-55	Output transformer (see speaker)
L1	105-34	Filter Choke
L2	105-35	R. F. "B" Choke
L3	105-19	Choke
L4	114-55	4.6 ohm speaker field

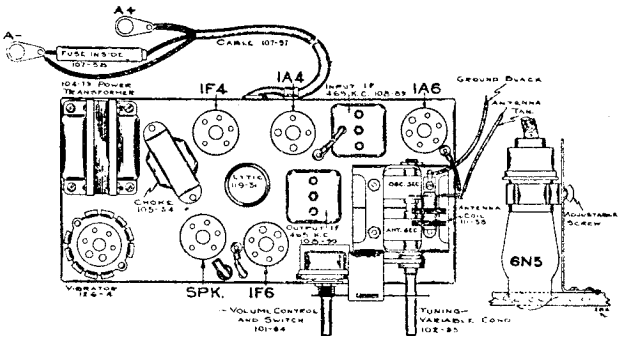

TOP VIEW

The tube complement of this chassis consists of the following tubes:

The type and function of each tube is as follows:
1—Type 1A6 Pentagrid Mixer, First Detector-oscillator
1—Type 1A4 Super-control R.F. Pentode, I.F. Amplifier (465 K.C.)
1—Type 1F6 Duplex Diode Pentode Second Detector, A.V.C. and First Audio.
1—Type 1F4 Pentode Output Amplifier.
1—Type 6N5 Cathode-Ray Tuning Eye.

DUMMY ANTENNAS:

The following dummy antennas are used in aligning and are referred to in the following alignment instructions as "Dummy 1" and "Dummy 2."

Dummy 1: (I.F.)—Consists of a .1 mfd. condenser connected in series with the external oscillator.

Dummy 2: (Broadcast)—Consists of a 200 mmfd. condenser and a 20 ohm resistor connected in series with each other and in series with the external oscillator.

SERVICE NOTES:

Voltages taken from different points of circuit to chassis are measured with volume control full on, all tubes in their sockets and speaker connected, with a volt meter having a resistance of 1000 ohms per volt.

ALIGNING I. F. TRANSFORMERS: (465 K.C.)

Part No. 108-90. Output I.F. Transformer
Part No. 108-89. Input I.F. Transformer

These I.F. transformers have two adjustments, both of which are accessible from the top of chassis (see top view—Fig. 1, page 2).

1. With volume control full on (the extreme right of its rotation), and with the variable condenser set to minimum capacity position, make the following adjustments:

   (a) Connect external oscillator set at 465 kilocycles, in series with "Dummy 1", to the control grid cap of the type 1A4 tube, and adjust the output I.F. transformer No. 108-90 to resonance.

   (b) Move oscillator output clip from grid of 1A4 to grid cap of 1A6 and adjust input I.F. transformer (No. 108-89) to resonance.

   (c) With oscillator still connected to 1A6, readjust output I.F. transformer (108-90) if necessary.

R. F. ALIGNMENT: (535-1720 K.C.)

1. With gang condenser in its minimum capacity position, plates entirely out of mesh, connect an external oscillator in series with "Dummy 2", to tan antenna and black ground leads and make the following adjustments:

   (a) With external oscillator set at 1720 kilocycles, adjust oscillator trimmer (rear section of gang condenser).

   (b) Re-set external oscillator to 1400 kilocycles, rotate condenser, pick up oscillator signal and adjust antenna trimmer to resonance (front section of gang condenser).

   (c) Check sensitivity at 600 and 1000 kilocycles.

©John F. Rider, Publisher

MODELS 62-261, 62-311, 62-411

MONTGOMERY-WARD & CO. Schematic

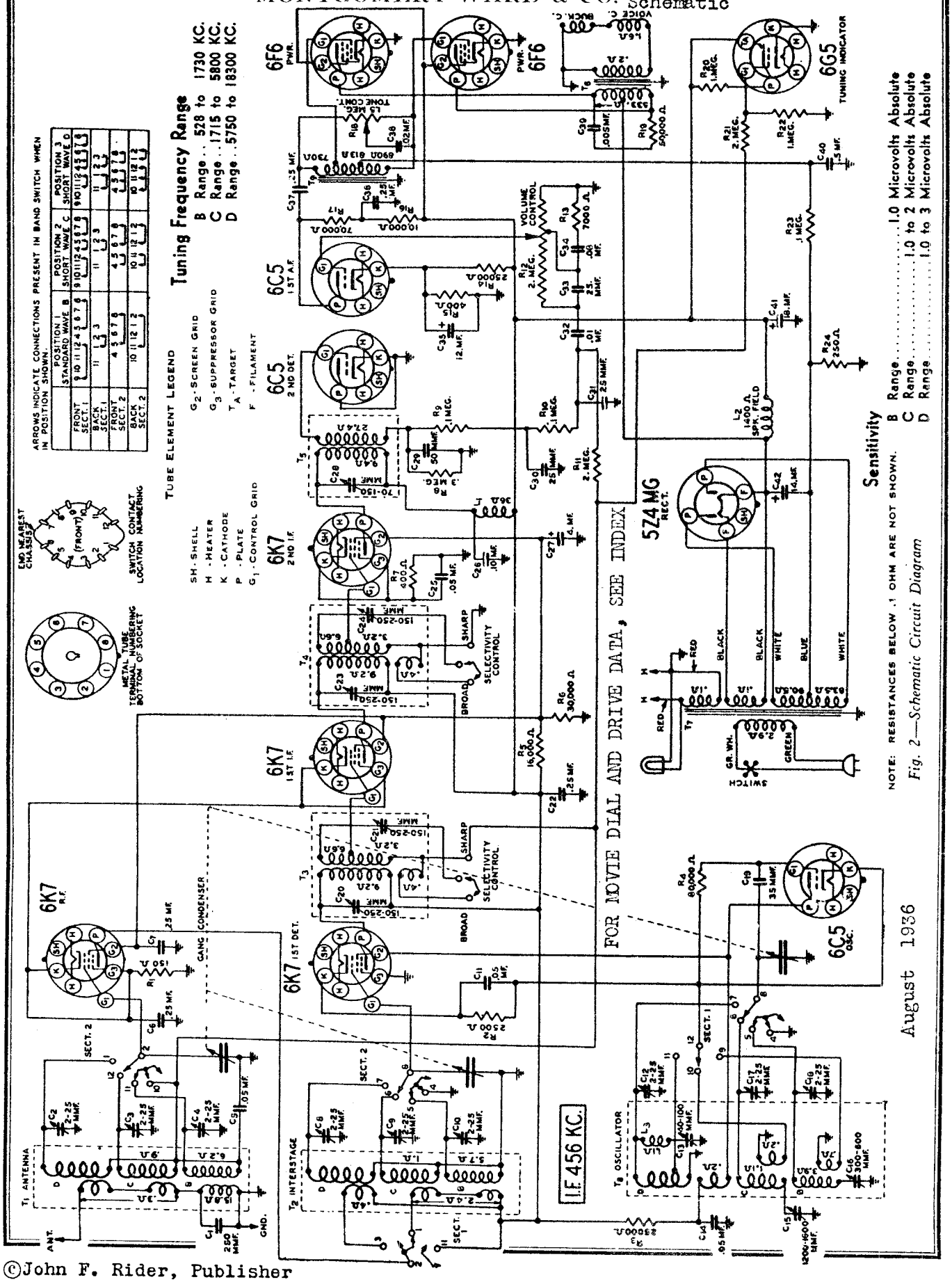

Fig. 2—Schematic Circuit Diagram

August 1936

©John F. Rider, Publisher

MODELS 62-261,62-311
62-411
Socket,Trimmers
Voltage,Coils

MONTGOMERY WARD & CO.

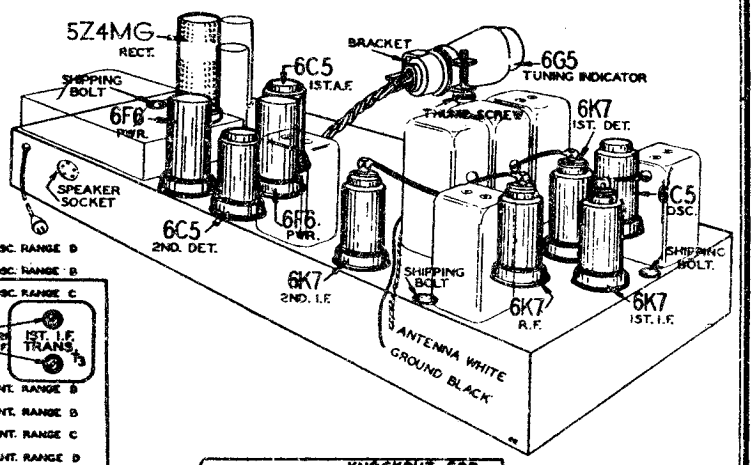

Fig. 6—Location of Tubes

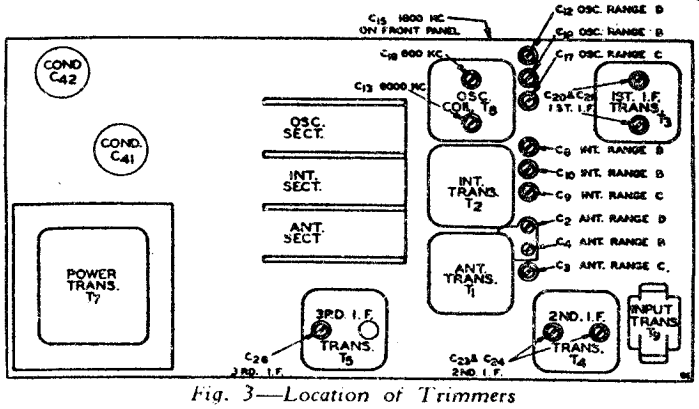

Fig. 3—Location of Trimmers

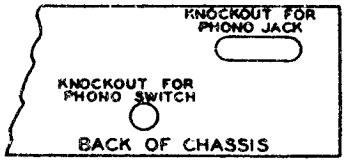

Fig. 8—Location of Phono Knockouts

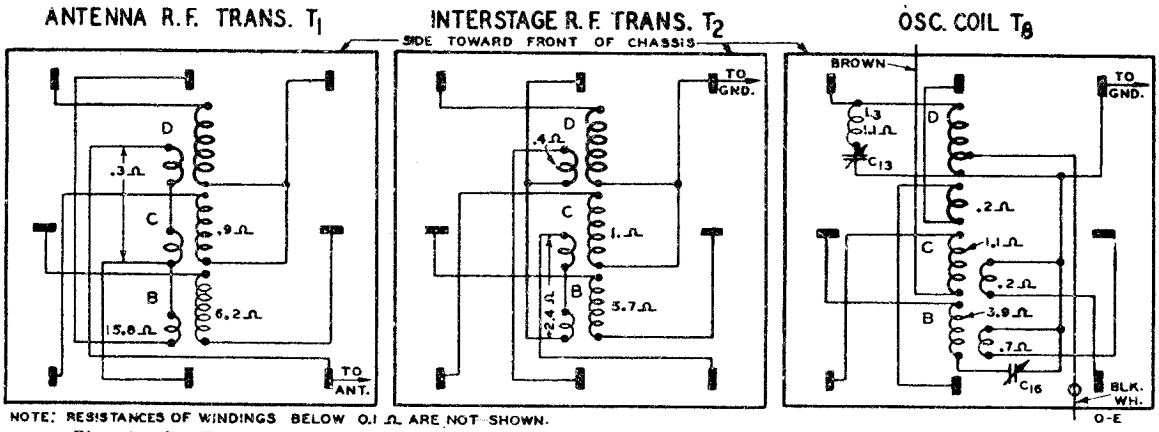

NOTE: RESISTANCES OF WINDINGS BELOW 0.1 Ω ARE NOT SHOWN.

Fig. 4—R. F. and Oscillator Coil Base Terminal Arrangement and D. C. Resistance of Windings

Line Voltage: 115
Volume Control: Maximum

Antenna Shorted to Ground
Position of Band Switch: Standard Wave

TUBE	FUNCTION	VOLTAGE BETWEEN SOCKET PRONGS AND GROUND (Unless otherwise indicated)							
		Prong No. 1	Prong No. 2	Prong No. 3	Prong No. 4	Prong No. 5	Prong No. 6	Prong No. 7	Prong No. 8
6K7	R.F.	0	6.1(1)	250	100	2.5	...	6.1(1)	2.5
6K7	1st Det.	0	6.1(1)	250	120	0	...	6.1(1)	9
6C5	Osc.	0	6.1(1)	120	...	...	...	6.1(1)	0
6K7	1st I.F.	0	6.1(1)	250	100	2.5	...	6.1(1)	2.5
6K7	2nd I.F.	0	6.1(1)	250	100	3	...	6.1(1)	3
6C5	2nd Det.	0	6.1(1)	0	...	...	...	6.1(1)	0
6C5	1st A.F.	0	6.1(1)	110	...	...	...	6.1(1)	4.5
6F6	Power Amp.	0	6.1(1)	330	250	25(2)	...	6.1(1)	0
5Z4MG	Rect.	0	4.8(3)	....	640(4)	...	640(4)	...	4.8(3)

6G5	Tuning Indicator	Plate to Ground 20(5)	Target to Ground 250	Cathode to Ground 0	Across Heater 6.1 A.C.

(1) A.C. voltage as read across heater terminals 2 and 7.
(2) As read across resistor R24.
(3) A.C. voltage as read across heater terminals 2 and 8.
(4) A.C. voltage as read across terminals 4 and 6.
(5) As read with 500,000 ohm meter.

©John F. Rider, Publisher

©John F. Rider, Publisher

I. F. Adjustment

Set the signal generator for a signal of 456 KC.

Connect the output of the signal generator through a 1 mf. condenser to the grid of the 1st detector.

Connect the ground lead of the receiver to the ground post of the signal generator.

Turn the band switch to the Range B position (standard wave band).

Turn the selectivity control to the sharp position and keep it in this position for all adjustments.

Turn the volume control to the maximum position.

Attenuate the signal from the signal generator to prevent the levelling-off action of the AVC.

Then adjust the five I.F. trimmers until maximum output is obtained. The adjusting screws for these condensers are reached from the top of the chassis and the location is shown in Fig. 3.

Range B Alignment

After the procedure for the alignment of each range, as explained below, is completed, it is advisable to repeat the procedure as a final check.

1730 KC Adjustment

Set the signal generator for 1730 KC.

Turn the rotor of the tuning condenser to the full open position.

Keep the band switch in the standard wave position.

Connect the antenna lead of the receiver through a 200 mmf. condenser to the output of the signal generator.

For this and all subsequent adjustments keep the volume control at the maximum position and attenuate the signal from the signal generator to prevent AVC action.

Adjust the oscillator Range B trimmer (C18) until maximum output is obtained. The location of this trimmer is shown in Fig. 3.

1500 KC Adjustment

Set the signal generator for 1500 KC.

Turn the rotor of the tuning condenser carefully until maximum output is obtained.

In sets using pointers, loosen the screw of the large pointer and set the pointer at the 1500 KC mark on the standard wave band scale. Re-tighten the screw.

In sets using the moving beam of light, there is a moving light assembly held to the front of the drive drum by means of a screw. Loosen this screw and move the light assembly until it is at the 1500 KC mark on the dial. Re-tighten the screw.

Adjust the interstage Range B trimmer (C10) and antenna Range B trimmer (C4) to maximum.

Do not change the setting of the oscillator Range B trimmer.

600 KC Adjustment

Set the signal generator for 600 KC.

Turn the tuning condenser rotor until maximum output is obtained.

Turn the rotor slowly back and forth at the same time adjusting the 600 KC trimmer until the peak of greatest intensity is obtained. See Fig. 3 for location of this trimmer.

Range C Alignment

CAUTION—When aligning the short wave bands be sure NOT to adjust at the image frequency. This can be checked as follows: Let us say the signal generator is set for 5000 KC. The signal will then be heard at 5000 KC on the dial of the radio. The image signal, which is much weaker, will be heard at 5000 less 912 KC, or 4088 KC. It may be necessary to increase the input signal to hear the image.

5800 KC Adjustment

Set the signal generator for 5800 KC.

Connect the antenna lead of the receiver through a 400 ohm resistor to the output of the signal generator.

Turn the rotor of the tuning condenser to the full open position.

Turn the band switch to the Range C position (first short wave band).

Adjust the oscillator Range C trimmer (C17) until maximum output is obtained. See Fig. 3 for location of this trimmer.

5000 KC Adjustment

Set the signal generator for 5000 KC.

Turn the rotor of the tuning condenser carefully until maximum output is obtained.

Adjust the interstage Range C trimmer (C9) and antenna Range C trimmer (C3) to maximum.

Do not change the setting of the oscillator Range C trimmer.

1800 KC Adjustment

Set the signal generator for 1800 KC.

Turn the tuning condenser rotor until maximum output is obtained.

Turn the rotor slowly back and forth at the same time adjusting the 1800 KC trimmer until the peak of greatest intensity is obtained. See Fig. 3 for location of this trimmer.

Range D Alignment

18,300 KC Adjustment

Set the signal generator for 18,300 KC.

Keep the antenna lead of the receiver connected through the 400 ohm resistor to the output of the signal generator.

Turn the rotor of the tuning condenser to the full open position.

Turn the band switch to the Range D position (second short wave band).

Adjust the oscillator Range D trimmer (C12) until maximum output is obtained. See Fig. 3 for location of this trimmer.

15,000 KC Adjustment

Set the signal generator for 15,000 KC.

Turn the rotor of the tuning condenser carefully until maximum output is obtained.

Adjust the interstage Range D trimmer (C8) and antenna Range D trimmer (C2) to maximum.

When adjusting the interstage and antenna Range D trimmers, it will be necessary at the same time to turn the tuning condenser rotor slowly back and forth until the peak of greatest intensity is obtained.

Do not change the setting of the oscillator Range D trimmer.

6000 KC Adjustment

Set the signal generator for 6000 KC.

Turn the tuning condenser rotor until maximum output is obtained.

Turn the rotor slowly back and forth at the same time adjusting the 6000 KC trimmer until the peak of greatest intensity is obtained. See Fig. 3 for location of this trimmer.

Trimmer Replacement

If one trimmer of the gang trimmer strip should become defective, it is not necessary to replace the entire strip. A single trimmer P-17A36, as shown in the replacement parts list, may be used. Disconnect the lead from the coil side (side not grounded) of the defective trimmer in the strip. This connection is then made to the single trimmer. Connect it to the side of the trimmer not in contact with the adjusting screw. The other side of the single trimmer is then connected to a good ground, using a piece of heavy wire in order to support the trimmer adequately. In replacing a trimmer, be sure to keep both leads as short as possible and keep the ungrounded lead as far from ground as possible.

Planetary Drive Assembly

The planetary assembly is the unit that is integral with the tuning shaft.

If the nut on the back end of this assembly is too tight, the drive will be jerky and will turn hard in high speed. If this condition exists, back off this nut one or two turns and note the effect.

If this nut is too loose, the drive will slip in slow speed. The remedy in this case, of course, is to tighten the nut.

Should the condenser drive cord slip when the planetary pulley is turning, inspect the tuning condenser, drive drum and gears to see if they are turning properly or if they are being obstructed in some way.

If the drive turns unevenly (rough in spots), this may mean that the planetary assembly is defective or damaged internally and a new unit will be required.

Phonograph Connections

Phonograph connections can be made as shown in Fig. 7. The parts required are shown in the parts list. Knockouts are provided in the back panel of the chassis for mounting the phono jack and phono switch—See Fig. 8.

The phono switch must be mounted with one set of terminals nearest the bottom of the chassis base.

The connections are made by opening the diode return circuit at the volume control. This is done by removing the white wire connected to the insulated lug of the terminal strip on which one end of condenser C32 is also connected. The terminal strip is located at the back of the volume control. This wire is then connected to the phono switch as shown in Fig. 7. A wire is then connected from the lug on the above mentioned terminal strip to the phono switch, as shown in Fig. 7. Both of the above wires are connected to the switch terminals nearest the chassis base and should be twisted together as far as possible and run as close to the back of the chassis base as possible.

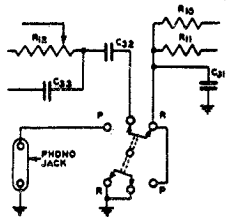

Fig. 7—Phonograph Connections

The lead to condenser C32, after turning away from the back of the chassis base, should be run close to the 6C5 tube sockets.

Complete the other connections as illustrated in Fig. 7, using the lugs in the chassis base, located near the phono switch and jack, for grounding purposes.

The control grid lead of the 6F6 power tube nearest the back of the chassis should be removed and a longer lead substituted. This lead is run from the tone control to the back of the chassis, along the lower edge and is then brought to the grid terminal by being routed between the speaker socket and the tubular condenser next to it.

If a hum is heard when the phono pickup is touched, reverse the two pickup leads.

Switch Contact Location Numbering

A standard arrangement for switch contact location numbering has been adopted. This numbering is illustrated in Fig. 2. In contact locations not used, the number applying to that particular location is not employed.

Voltage Chart

The voltage readings are taken with a voltmeter having a resistance of 1000 ohms per volt.

The standard metal tube socket terminal numbering system (bottom of socket) is shown in Fig. 5 On the schematic circuit diagram, Fig. 2, is a list giving the complete names of the tube elements and the corresponding symbols as used on the sockets on the schematic.

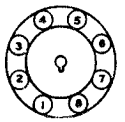

Fig. 5—Metal Tube Terminal numbering (bottom of socket)

MODELS 62-261,62-311
62-411

MONTGOMERY-WARD & CO.

Notes,Parts

Referring to the 1st and 2nd I.F. transformers T3 and T4 in Fig. 2, it will be noted that there are coupling windings shown below the primaries in the illustration.

When the selectivity control is in the sharp position, the coupling windings are open circuited and the loose coupling which exists between the primary and secondary of these transformers results in high selectivity.

When the selectivity control is in the broad position, the coupling winding which is wound under the primary is connected in series with the secondary. This provides overcoupling which results in a greatly widened resonance curve. Passage of a wide range of audio frequencies is thus obtained.

Across the volume control resistor R12 is a filter composed of condensers C33 and C34 and resistor R13. A tap connection near the low potential end of the volume control is connected between the two condensers. At high volume settings, the filter is not effective. At the low volume settings, as the movable arm approaches the tap, the higher frequencies are by-passed through condenser C34. Very high frequencies are transmitted through condenser C33 to compensate for the reduction of these frequencies. At low volume settings the low frequency amplitudes are increased as a result.

Transformer coupling is used between the first audio stage and the output stage which employs two type 6F6 output pentode tubes in a stage of push-pull amplification. A type 5Z4MG (metal glass tube) full wave rectifier is used in the power unit.

The 6G5 tuning indicator tube is wired as shown in the schematic. This tube contains a triode and cathode ray section in one envelope.

The cathode ray is produced by the attraction of electrons from the upper end of the cathode to the coated target or anode, which is operated at a high positive potential. When this electron stream strikes the target the coating glows. The electron stream is controlled by an additional element, or control electrode, in the tube.

As a signal is tuned in, the control grid of the triode section of the 6G5 cathode ray tube becomes increasingly negative, the negative bias voltage being taken from the AVC line. The AVC voltage is reduced to a suitable value by the potentiometer arrangement of the 1 and 2 megohm resistors. The increased bias voltage reduces the triode plate current. This reduces the voltage drop across the 1 megohm plate resistor and raises the triode plate voltage. The triode plate is connected to the control electrode of the cathode ray section of the tube.

The shape and size of the area on the target struck by the cathode ray is governed by the voltage of the control electrode. When the signal is tuned to resonance, practically no plate current flows and the voltage of the control electrode is the same as that of the target. There is no opposition to the flow of electrons to the target. Tuning off resonance decreases the control electrode voltage and causes the darkened sector of the target to widen, because of the opposition to the flow of electrons in the direction of the control electrode.

NOTICE—There is a large letter on the chassis which identifies the set as to major part changes. When ordering parts, please be sure to mention the series number and this large letter.

Prices subject to change without notice

TRANSFORMERS AND COILS

Part No.	Code	Description	List Price
P-9A622	T1	Antenna Transformer and Can Assembly	$1.90
P-9A623	T2	R. F. Interstage Transformer and Can Assembly	1.85
P-9A625	T3	1st I. F. Transformer and Can Assembly	1.85
P-9A626	T4	2nd I. F. Transformer and Can Assembly	1.85
P-9A627	T5	3rd I. F. Transformer and Can Assembly	1.50
P-51X41	T6	Output Transformer (Part of Speaker Assembly)	2.45
P-53X113	T7	115 Volt, 60 Cycle, Power Transformer	4.40
P-53X126	T7	115 Volt, 25 Cycle, Power Transformer	7.20
P-53X127	T7	115-230 Volt, 40-60 Cycle Power Transformer	6.20
P-9A624	T8	Oscillator Coil and Can Assembly	2.85
P-50X34	T9	Input Transformer	1.25
P-9A496	L1	2nd I. F. Plate Isolating Reactor	.75

CONDENSERS

TUBULAR

Part No.	Code	Capacitance	Voltage	List Price
P-46X80	C5	.05 mf.	180	$0.15
P-46X117	C6	.25 mf.	180	.25
P-46X104	C7	.25 mf.	240	.25
P-46X90	C11	.05 mf.	180	.15
P-46X119	C14	.05 mf.	360	.20
P-46X121	C22	.25 mf.	360	.30
P-46X80	C25	.05 mf.	180	.15
P-46X105	C26	.10 mf.	360	.20
P-46X120	C32	.01 mf.	360	.15
P-46X176	C34	.08 mf.	180	.15
P-49X10	C36	.25 mf.	360	.60
	C37	.25 mf.	360	
P-46X120	C38	.01 mf.	360	.15
P-46X174	C39	.005 mf.	1000	.20
P-46X191	C40	.5 mf.	180	.30

ELECTROLYTIC

Part No.	Code	Capacitance	Voltage		List Price
P-45X213	C27	4 mf.	150	Dry	.95
	C35	12 mf.	25		
P-44X11	C41	18 mf.	290	Wet	1.10
P-44X10	C42	14 mf.	400	Wet	1.25

MOLDED

P-47X69	C1	250 mmf.	.15
P-47X53	C19	35 mmf.	.10
P-47X56	C29	50 mmf.	.10
P-47X72	C30	25 mmf.	.10
P-47X72	C31	25 mmf.	.10
P-47X72	C33	25 mmf.	.10

TRIMMER

P-17A45 Trimmer Strip	C2	2-25 mmf. Range "D" Antenna Trimmer	.95
	C3	2-25 mmf. Range "C" Antenna Trimmer	
	C4	2-25 mmf. Range "B" Antenna Trimmer	
	C8	2-25 mmf. Range "D" Interstage Trimmer	
	C9	2-25 mmf. Range "C" Interstage Trimmer	
	C10	2-25 mmf. Range "B" Interstage Trimmer	
	C12	2-25 mmf. Range "D" Oscillator Trimmer	
	C17	2-25 mmf. Range "C" Oscillator Trimmer	
	C18	2-25 mmf. Range "B" Oscillator Trimmer	

See Part Number 17A36 for replacement of any one section.

P-17A35	C13	40-100 mmf. Range "D" Oscillator Padding Condenser	.45
	C16	300-600 mmf. Range "B" Oscillator Padding Condenser	
P-17A47	C15	1200-1600 mmf. Range "C" Oscillator Padding Condenser	.45
P-17A30	C20	150-250 mmf.	.45
	C21	150-250 mmf.	1st I. F. Trimmers
P-17A30	C23	150-250 mmf.	.45
	C24	150-250 mmf.	2nd I. F. Trimmers
P-17A40	C28	70-150 mmf. 3rd I. F. Trimmer	.30

MISCELLANEOUS

P-17A36	2-25 mmf. (to be used for replacement of any one section of Trimmer Strip P-17A45)	.10
P-14A52	3 Gang Condenser, Less Dial and Drive Assembly	3.60

RESISTORS

CARBON

Part No.	Code	Resistance	Wattage	List Price
P-A94151	R1	150 Ohms	0.2	$0.15
P-A95252	R2	2,500 Ohms	0.2	.10
P-C94253	R3	25,000 Ohms	1.0	.15
P-A94803	R4	80,000 Ohms	0.2	.15
P-D93163	R5	16,000 Ohms	2.0	.45
P-C94303	R6	30,000 Ohms	1.0	.15
P-A94401	R7	400 Ohms	0.2	.15
P-A94304	R8	300,000 Ohms	0.2	.15
P-A95104	R9	100,000 Ohms	0.2	.10
P-A95104	R10	100,000 Ohms	0.2	.10
P-A94205	R11	2.0 Megohms	0.2	.15
P-A94702	R13	7,000 Ohms	0.2	.15
P-E94253	R14	25,000 Ohms	3.0	.30
P-A94401	R15	400 Ohms	0.2	.15
P-A95103	R16	10,000 Ohms	0.2	.10
P-B95703	R17	70,000 Ohms	0.5	.10
P-C95503	R19	50,000 Ohms	1.0	.10
P-A95105	R20	1.0 Megohms	0.2	.10
P-A94205	R21	2.0 Megohms	0.2	.15
P-A94105	R22	1.0 Megohms	0.2	.15
P-A95104	R23	100,000 Ohms	0.2	.10

WIRE WOUND

P-43X56	R24	250 Ohms	3.0	.30

VARIABLE

P-36X219	R12	2.0 Megohms	Volume Control and On-Off Switch	1.10
P-40X213	R18	1.5 Megohms	Tone Control and Selectivity Switch	1.30

©John F. Rider, Publisher

MONTGOMERY-WARD & CO.

MODELS 62-274, 62-288, 62-290
Issue A
Schematic, Socket, Trimmers
Parts, Voltage

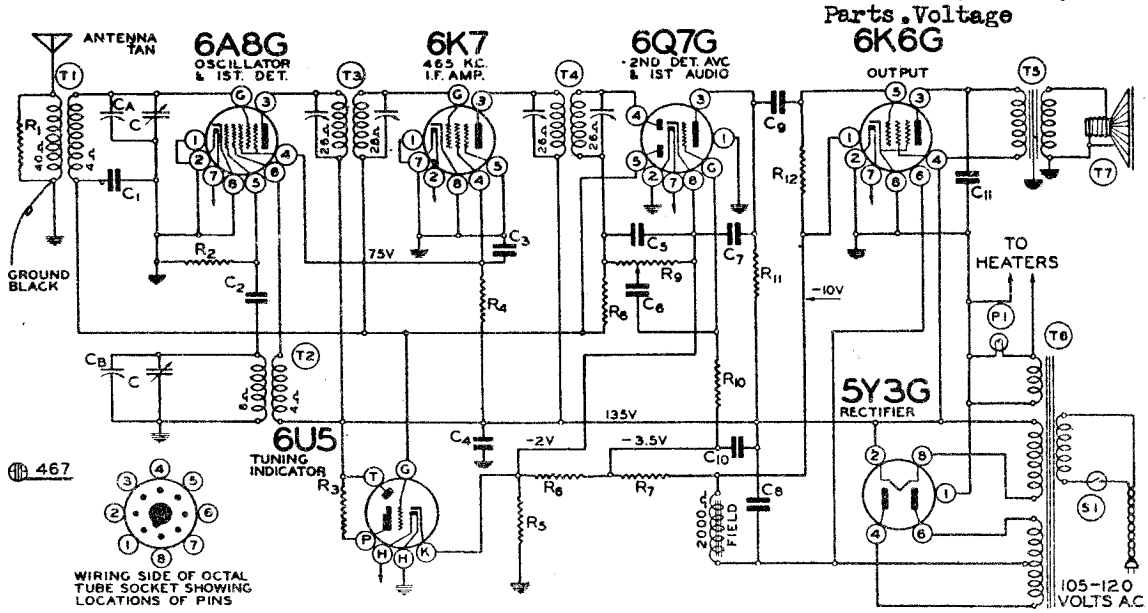

LIST OF REPAIR PARTS (Serial No. 107300 and up)
USE ONLY GENUINE FACTORY REPLACEMENT PARTS

Bin No.	Part No.	schematic reference	Description	No. Used in set	Selling price each
			CONDENSERS		
10979	BE100-1	C3	.1x400 volt Tubular	1	.10
11387	BE100-9	C1	.05x200 volt Tubular	1	.10
11256	BE100-11	C6,C9	.01x400 volt Tubular	2	.09
	BE100-13	C4	.05 x 400 Volt Tubular	1	.10
10925	BE100-19	C11	.006x600 volt Tubular	1	.09
	BE119-47B	C8,C10	5 Mfd. x 200 w.v.; 5 Mfd. x 250 w.v. Electrolytic Filter	1	.70
10930	BE129-2	C7	.0005 Mica — Type — 20%	1	.09
11335	BE129-5	C5	.0001 Mica — Type — 20%	1	.09
10928	BE129-12	C2	.00025 Mica — Type — 20%	1	.10
			RESISTORS		
	BE106-35	R5,R6,R7	65 Ohm, 45 Ohm, 220 Ohm metal Clad Resistor	1	.20
11097	BE130-9	R11	200 M Ohm-1/3 watt-20% Carbon	1	.08
11068	BE130-12	R2	50 M Ohm-1/3 watt-20% Carbon	1	.08
11353	BE130-17	R1	10M Ohm-1/3 watt- 20% Carbon	1	.08
	BE130-118	R12	600M Ohm-1/3 watt-20% Carbon	1	.08
11094	BE130-149	R4	15M Ohm-1/3 watt-20% Carbon	1	.08
11090	BE130-170	R8,R10	3 Megohm-1/3 watt-25% Carbon	2	.08
			COILS		
10534	BE108-82D	T3	Input I.F. Coil Assembly Complete with Can	1	.60
10536	BE108-83D	T4	Output I.F. Coil Assembly Complete with Can	1	.60
	BE110-72	T2	Oscillator Coil Assembly Complete	1	
	BE111-58B	T1	Antenna Coil Assembly Complete	1	.40
			SOCKETS		
	BE121-27		Eight Prong Octal Socket—Marked "6K7"	1	.10
10234	BE121-15		Five Prong Octal Socket—Marked "5Y3"	1	.08
	BE121-22		Eight Prong Octal Socket—Marked "6A8"	1	.10
	BE121-86		Eight Prong Octal Socket—Marked "6K6"	1	.10
	BE121-21		Eight Prong Octal Socket—Marked "6Q7"	1	.10
			TRANSFORMERS		
9077	BE104-100B	T6	Power Transformer 50/60 cycle 105-120 volt	1	1.50
	BE104-102		Universal Transformer 50/60 cycle primary		
	BE104-103		Power Transformer 25 cycle, 105-120 volt		
	BE104-104		Universal Transformer 25 cycle primary		
	BE104-99B		Universal Transformer 40 cycle primary		
			SPEAKER		
	BE114-106	T7	Five Inch Dynamic (2000 Ohm Field)	1	2.00
			MISCELLANEOUS		
11130	BE101-101	R9,S1	Volume Control and Switch (1 Megohm)	1	.50
	BE102-64	C	Two Gang Variable Condenser	1	
	BE105-55	T5	Output Transformer for Speaker (Mounted on Chassis)	1	.50
	BE107-98		Line Cord and Plug	1	.24
	BE118-69		Bottom Cover Plate for Chassis	1	.30
	BE117-133		Brass Bushings for mounting bottom plate	4	.01
11325	BE128-126E		Black Bakelite Tuning Knob	1	.12
11530	BE128-126W		Ivory Bakelite Tuning Knob		.12
11569	BE128-126BR		Walnut Bakelite Tuning Knob		.12
11570	BE128-134E		Black Bakelite Knob	1	.06
11120	BE128-134W		Ivory Bakelite Knob		.06
11121	BE128-134BR		Walnut Bakelite Knob		.06
	BE128-127E		Black Bakelite cabinet complete, including baffle, grill cloth and carton	1	3.00
	BE128-127W		Ivory bakelite cabinet complete including baffle, grill cloth and carton		5.00
	BE128-127BR		Walnut bakelite cabinet complete, including baffle, grill cloth and carton		3.00
	BE128-129		Grill cloth back and front (specify color of cabinet)	2	.08
	BE128-129B		Cloth for end (specify color of cabinet)	1	.04
	BE128-129C		Cloth for end (specify color of cabinet — Small	1	.04
	BE128-132B		Baffle Board	1	.03
	BE132-82		No. 6x32x½ bottom plate and chassis mounting screws	5	dz. .04
	BE134-48		Rubber grommet (for bottom plate)	4	.02
			DIAL PARTS LIST		
	BE112-349		Automatic Tuning Unit Complete Including Levers, Dial Scale and Indicator Film But Less Gang Condenser		4.00
11122	BE107-94		Pilot Light Bulb		.08
	BE107-68		Pilot Light Bracket and Socket		.05
11075	BE112-347		Dial Scale (Calibrated)		.30
10851	BE131-43		Cinch Buttons for Fastening Dial Scale to Automatic Tuning Housing		.01
	BE112-343		Indicator Film		.15
	BE120-162		Take-up Spring for Indicator Film		.04
	BE128-126		Tuning Knob (Bakelite) (Specify Color)		.12
	BE117-192		Locking Screw for Tuning Knob		.06
	BE112-341		Idler Pulley and Shaft for Indicator Film		.09
	BE134-58		Felt Shield for Levers		.04
	BE120-143		Take-up Spring for Levers		.03
	BE112-339		Special Flexible Coupling Unit (Couple Gang Condenser to Automatic Tuner Assembly)		.20
10730	BE120-9		Drive String for Indicator Film		.04
10956	BE120-151		Take-up Spring for 120-9 Drive String		.04
	BE112-348		Set of 4 Sheets Station Call Letter Tabs	Set	.10
	BE112-336		Clear Pyralin Tabs for Station Call Letter Tabs	Doz.	.05
	BE128-128		Buttons for Automatic Levers		.05

CATHODE RAY TUNING EYE PARTS

BE107-109	R3	Cable and Socket Assembly Complete with 250M Resistor	1 .34
BE117-143		Clamp and Wing Bolt for Tuning Eye Socket	1 .10

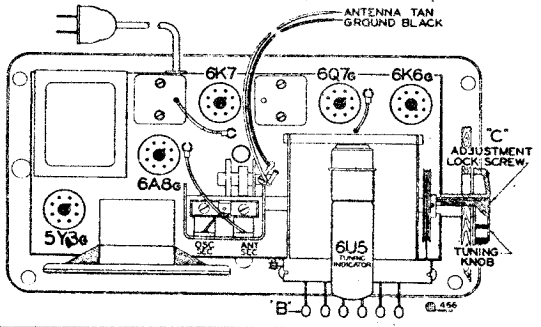

FOR TUNER DATA
SEE INDEX

©John F. Rider, Publisher

MODELS 62-274,62-288,62-290
Issue B,Above Ser.207500
Schematic,Voltage,Socket

MONTGOMERY-WARD & CO.

Trimmers,Parts
Issues A and B,Alignment

FOR TUBER DATA, SEE INDEX

ISSUE B

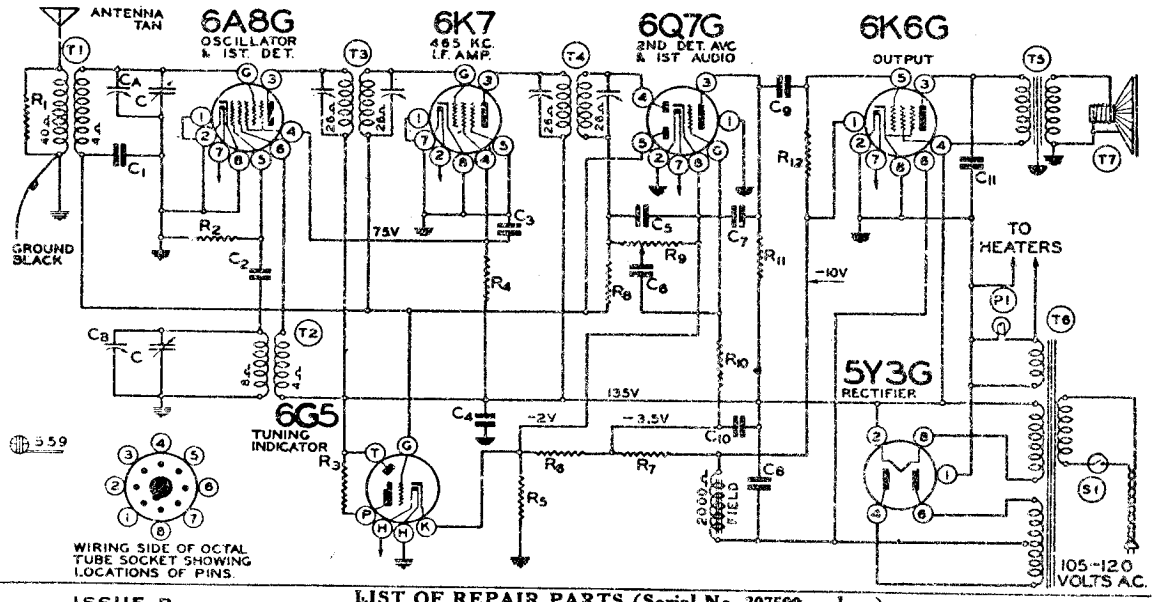

ISSUE B

LIST OF REPAIR PARTS (Serial No. 207560 and up)

Stock No.	Part No	Schematic reference	Description	No. Used in set	Selling price each
			CONDENSERS		
10979	BE100-1	C3	.1x400 volt Tubular	1	.10
11387	BE100-9	C1	.05x200 volt Tubular	1	.10
11256	BE100-11	C6,C9	.01x400 volt Tubular	2	.09
	BE100-13	C4	.05 x 400 Volt Tubular	1	.10
10926	BE100-19	C11	.006x600 volt Tubular	1	.09
	BE119-47B	C8,C10	5 Mfd. x 200 w.v.; 5 Mfd. x 250 w.v. Electrolytic Filter	1	.70
10930	BE129-2	C7	.0005 Mica — Type — 20%	1	.09
11335	BE129-5	C5	.0001 Mica — Type — 20%	1	.09
10928	BE129-12	C2	.00025 Mica — Type — 20%	1	.10
			RESISTORS		
	BE106-35	R5,R6,R7	65 Ohm, 45 Ohm, 220 Ohm metal Clad Resistor	1	.20
11097	BE130-9	R11	200 M Ohm-1/3 watt-20% Carbon	1	.08
11068	BE130-12	R2	50 M Ohm-1/3 watt-20% Carbon	1	.08
11353	BE130-17	R1	10M Ohm-1/3 watt- 20% Carbon	1	.08
	BE130-118	R12	600M Ohm-1/3 watt-20% Carbon	1	.08
11094	BE130-21	R4	20M Ohm-1/3 watt-20% Carbon	1	.08
11090	BE130-170	R8,R10	3 Megohm-1/3 watt-25% Carbon	2	.08
			COILS		
10534	BE108-82D	T5	Input I.F. Coil Assembly Complete with Can	1	.60
10536	BE108-83D	T4	Output I.F. Coil Assembly Complete with Can	1	.60
	BE110-72	T2	Oscillator Coil Assembly Complete	1	.40
	BE111-102	T1	Antenna Coil Assembly Complete	1	
			SOCKETS		
	BE121-93		Eight Prong Octal Sockets	4	.10
10234	BE121-95		Five Prong Octal Sockets	1	.08
			TRANSFORMERS		
9077	BE104-100B	T6	Power Transformer 50/60 cycle 105-120 volt	1	1.50
	BE104-108B		Power Transformer 25 cycle, 105-120 volt		
	BE104-104B		Universal Transformer 25 cycle primary		
	BE104-99C		Universal Transformer 40 cycle primary		

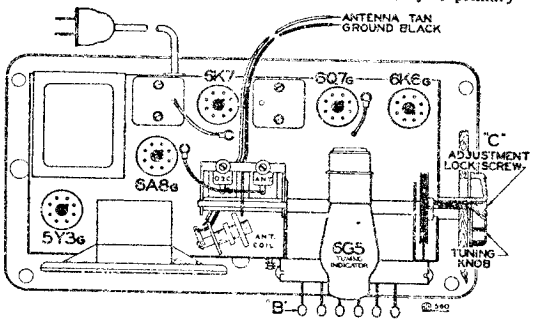

Voltages taken from different points of circuit to chassis are measured with volume control full on, all tubes in their sockets and speaker connected, with a volt meter having a resistance of 1000 ohms per volt.

All voltages as indicated on diagram are measured with 115 volts on the primary of the power transformer.

Resistances of coil windings are indicated in ohms on the schematic circuit diagram.

To check for open by-pass condensers, shunt each condenser with another condenser of the same capacity and voltage rating, which is known to be good, until the defective unit is located.

Excessive hum, stuttering, low volume and a reduction in all D.C. voltages is usually caused by a shorted electrolytic condenser; open by-pass condensers frequently cause oscillation and distorted tone.

ALIGNING INSTRUCTIONS: ISSUES "A" AND "B"

CAUTION:—No aligning adjustments should be attempted without first thoroughly checking over all other possible causes of trouble, such as poor installations, open or grounded antenna systems, low line voltages, defective tubes, condensers and resistors. In order to properly align this chassis, an oscillator (generator) is absolutely necessary. No aligning adjustments should be attempted with the chassis in the cabinet.

RESONANCE INDICATOR:

Use as a resonance indicator an output meter connected across the primary of the speaker input transformer, or by means of an adapter between the plate and screen terminals of the type 6K6G output tube. Maximum deflection of the meter indicates resonance. Use only enough signal to get a readily readable output. A low range output meter or the low scale of a multi-range meter should be used.

ALIGNING I.F. TRANSFORMERS: (465 K.C.):

Part No. 108-83D Output I.F. Transformer
Part No. 108-82D Input I.F. Transformer

These I.F. transformers have two adjustments, both of which are accessible from the top of chassis (see Fig. 1).

1. With volume control full on (the extreme right of its rotation), and with the variable condenser set to approximately 1400 kilocycles, make the following adjustments:
   (a) Connect external oscillator set at 465 kilocycles, in series with .1 mfd. condenser, to the control grid cap of the type 6K7 tube, and adjust the output I. F. transformer (No. 108-83D) to resonance.
   (b) Move oscillator output clip from grid of 6K7 to grid of 6A8G and adjust input I.F. transformer (No. 108-82D) to resonance.
   (c) With oscillator still connected to 6A8G, readjust output I.F. transformer (108-83D) if necessary.

R.F. ALIGNMENT: (535-1720 K.C.)

1. With gang condenser in its minimum capacity position, plates entirely out of mesh, connect an external oscillator in series with a 200 mmf. condenser to the antenna lead and chassis ground and make the following adjustments:
   (a) With external oscillator set at 1720 kilocycles, adjust oscillator trimmer to resonance. This adjustment is on the top of rear section of variable gang condenser. (See Fig. 1).
   (b) Re-set external oscillator to 1400 kilocycles, rotate condenser, pick up oscillator signal and adjust antenna trimmer to resonance. (Top of front section of gang condenser).
   (c) Check sensitivity at 600 and 1000 kilocycles.

©John F. Rider, Publisher

MONTGOMERY-WARD & CO.

MODELS 62-274,62-288,62-290
MODEL 62-280
MODELS 62-350,62-351,62-352
MODEL 62-361
Tuner Data

MODELS 62-274, 62-288 and 62-290

MODEL 62-280

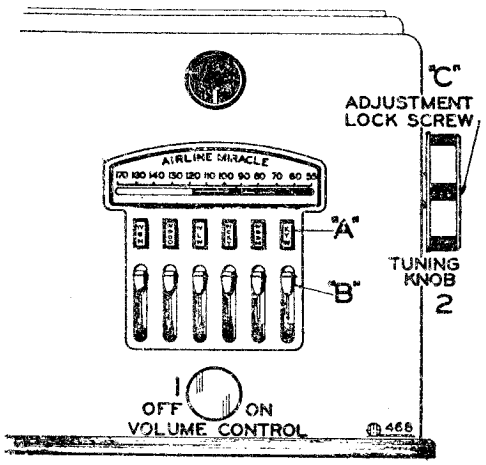

FIG. 2—FRONT VIEW

MODELS 62-350, 62-351 and 62-352

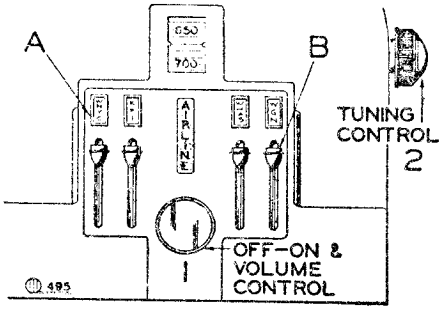

FIG. 2—FRONT VIEW

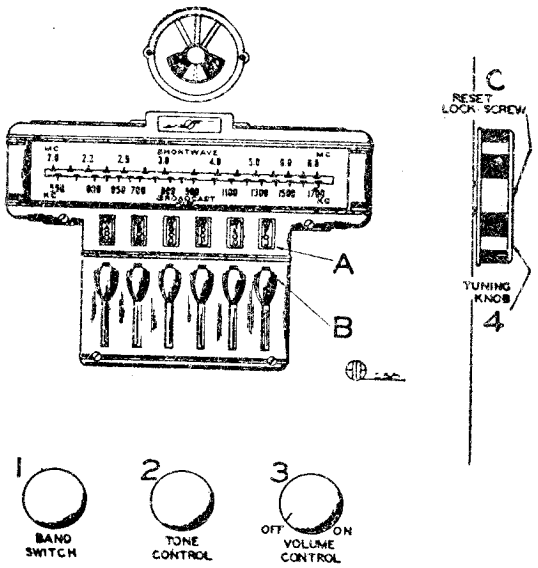

FIG. 2—FRONT VIEW

PROCEDURE FOR SETTING THE AUTOMATIC LEVERS:

There are four levers on the dial by means of which four stations may be selected, (See "B". Fig. 2).

Press down any one of the levers. Holding it down, tune in by means of tuning knob No. 2 any one of your favorite stations. Turn the tuning knob very slowly back and forth until signal is clearest. The station will then be accurately tuned in. Adjust the volume by means of the volume control knob to the desired intensity.

Release this lever and press down any other lever. Hold this lever down and tune in by means of knob No. 2 another favorite station.

Follow this procedure until stations have been set on all the levers. Hold tuning knob securely with left hand to prevent it from turning and with a coin or screw driver, tighten the special locking screw ("C") in the center of the tuning knob,

This screw will lock in place all the stations you have selected on the levers. (Note: Locking Screw "C" is loose when radio is shipped from factory).

If you should desire to change any station you selected to another, hold the tuning knob securely and loosen locking screw ("C") one or two turns; select the new station as explained.

BE SURE TO RETIGHTEN THE LOCKING SCREW, otherwise the stations will not stay adjusted to the levers.

Above each lever an opening in the cabinet is provided for inserting station call letters, (See "A", Fig. 2).

Punch the correct station call letter tabs from the set of sheets supplied and insert them into the rectangular openings in the cabinet above each of the levers. One of the small, clear celluloid tabs supplied should be snaped into place over each of the station call letter tabs.

The Automatic Tuner dial is now set for quick tuning. Press down on the lever and your favorite station is selected.

MODEL 62-361

PROCEDURE FOR SETTING THE AUTOMATIC LEVERS:

There are six levers on the dial by means of which six stations may be selected, (See "B", Fig. 2).

Press down any one of the six Automatic levers. Holding it down, tune in by means of tuning knob No. 4 any one of your favorite stations. Turn the tuning knob very slowly back and forth noting the width of the shadow indicated on the screen of the cathode-ray tuning eye. Minimum width indicates the ideal tuning position (resonance). The station will then be accurately tuned in.

Release this lever and press down any other lever. Hold this lever down and tune in by means of knob No. 4 another favorite station.

Follow this procedure until stations have been set on all the levers. Hold tuning knob securely with left hand to prevent it from turning and with a coin or screw driver, tighten the special locking screw ("C") in the center of the tuning knob, (See Fig. 1).

This screw will lock in place all the stations you have selected on the Automatic levers. (Note: Locking Screw "C" is loose when radio is shipped from factory).

If you should desire to change any station you selected to another, hold the tuning knob securely and loosen locking screw ("C") one or two turns; select the new station as explained.

BE SURE TO RETIGHTEN THE LOCKING SCREW, otherwise the stations will not stay adjusted to the levers.

Above each Automatic lever an opening in the cabinet is provided for inserting station call letters, (See "A", Fig. 2).

Punch the correct station call letter tabs from the set of sheets supplied and insert them into the rectangular openings in the cabinet above each of the levers. One of the small, clear celluloid tabs supplied should be snapped into place over each of the station call letter tabs.

The Automatic Tuner dial is now set up for quick tuning. Press down on the lever and your favorite station is selected.

TO TURN THE RADIO OFF:

Turn the on-off switch and volume control knob No. 3 to the left until a click is heard. The receiver will then be turned off.

©John F. Rider, Publisher

MODEL 62-280
Schematic, Voltage
Socket, Trimmers
Alignment, Parts

MONTGOMERY-WARD & CO.

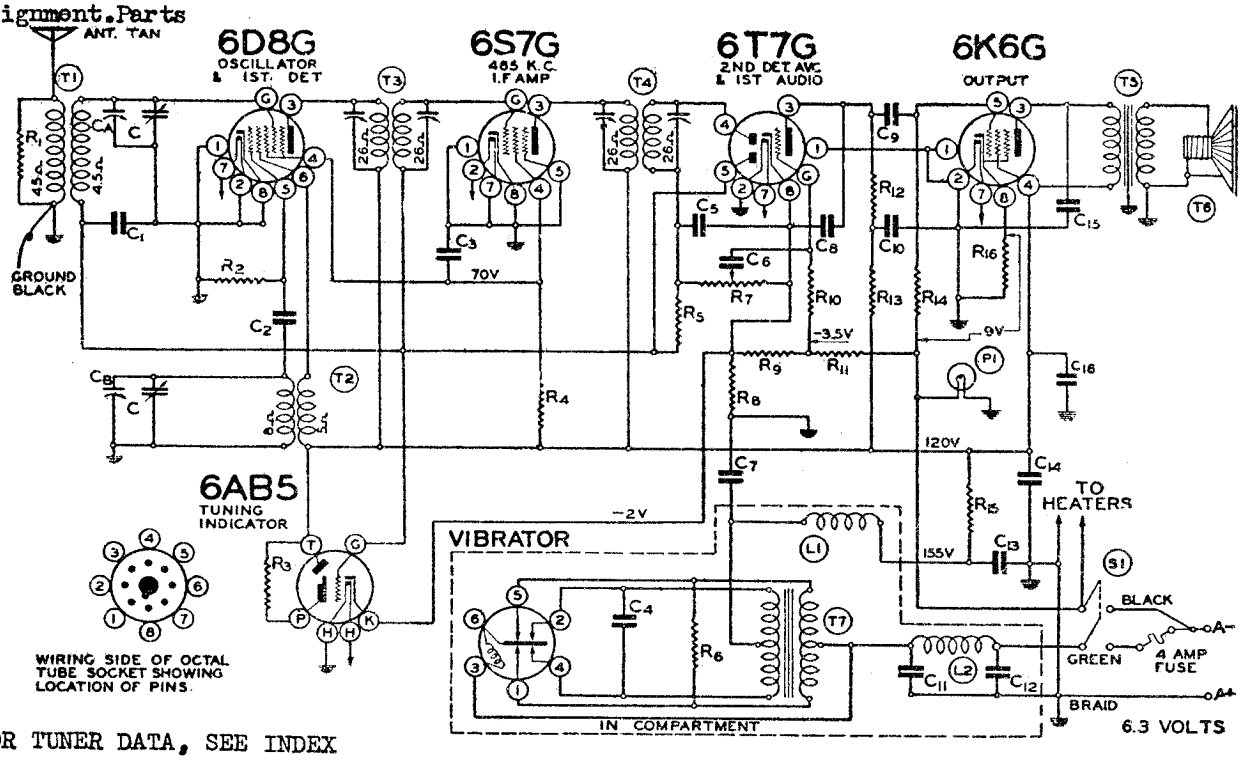

FOR TUNER DATA, SEE INDEX

Bin No.	Part No.	Schematic Reference	Description	No. Used In Set	Selling Price Each
			CONDENSERS		
11387	BE100-9	C1	.05x200 Volt Tubular	1	.10
11256	BE100-11	C6,C9 C3, C7	.01x400 Volt Tubular	2	.09
11115	BE100-20	C10	.1x200 Volt Tubular	3	.10
11495	BE100-34	C4	.005x1200 Volt Tubular	1	.09
	BE100-37	C15	.003x600 Volt Tubular	1	.10
11488	BE100-40	C11,C12	.5x200 Volt Tubular	2	.20
	BE119-46	C13,C14	Dual 5 Mfd x 250 w. Volt Filter	1	.60
11335	BE129-5	C5	.0001 Mica — Type MT — 20%	1	.09
10928	BE129-12	C2,C8	.00025 Mica — Type MT — 20%	2	.10
			RESISTORS		
		R8, R9			
	BE106-44	R11	50 Ohm, 25 Ohm, 75 Ohm Metal Clad Strip	1	.20
11116	BE130-4	R5,R10	3 Megohm—1/3 Watt—20%—Carbon	2	.08
11068	BE130-12	R2	50M Ohm—1/3 Watt—20%—Carbon	1	.08
11353	BE130-17	R1	10M Ohm—1/3 Watt—20%—Carbon	1	.08
11188	BE130-19	R14	1 Megohm—1/3 Watt—20%—Carbon	1	.08
	BE130-48	R4	15M Ohm—1/3 Watt—10%—Carbon	1	.08
11489	BE130-84	R6,R16	200 Ohm—1/3 Watt—20%—Carbon	2	.08
11050	BE130-100	R12	150M Ohm—1/3 Watt—20%—Carbon	1	.08
	BE130-103	R13	100M Ohm—1/3 Watt—10%—Carbon	1	.08
	BE130-199	R15	1500 Ohm—1 Watt—10%	1	.08
			COILS		
	BE108-82C	T3	Input I.F. Coil Assembly complete with can	1	.60
	BE108-83D	T4	Output I.F. Coil Assembly complete with can	1	.60
	BE110-72	T2	Oscillator Coil Assembly complete	1	.30
	BE111-85	T1	Antenna Coil Assembly complete	1	.60
			CHOKE COILS		
	BE105-19	L2	A Choke Coil	1	.08
	BE105-35	L1	R. F. "B" Choke Coil	1	.16
			TRANSFORMER		
	BE104-62D	T7	Power Transformer for Vibrator	1	1.50

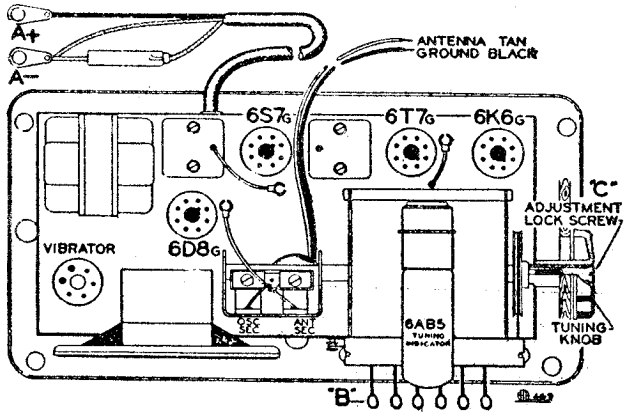

SERVICE NOTES:

Voltage taken from different points of circuit to chassis are measured with volume control full on, all tubes in their sockets and speaker connected, with a volt meter having a resistance of 1000 ohms per volt.

All voltages are to be measured with 6.3 volts input to receiver.

Resistances of coils and transformer windings are indicated in ohms on schematic circuit diagram.

To check for open by-pass condensers, shunt each condenser with another condenser of the same capacity and voltage rating, which is known to be good, until the defective unit is located.

ALIGNING I.F. TRANSFORMERS: (465 K.C.):

Part No. 108-83D Output I. F. Transformer
Part No. 108-82C Input I. F. Transformer

These I.F. transformers have two adjustments, both of which are accessible from the top of chassis (see Fig. 1).

1. With volume control full on (the extreme right of its rotation), and with the variable condenser set to approximately 1400 kilocycles, make the following adjustments:
   (a) Connect external oscillator set at 465 kilocycles, in series with .1 mfd. condenser, to the control grid cap of the type 6S7G tube, and adjust the output I.F. transformer (No. 108-83D) to resonance.
   (b) Move oscillator output clip from grid of 6S7G to grid of 6D8G and adjust input I.F. transformer (No. 108-82C) to resonance.
   (c) With oscillator still connected to 6D8G, readjust output I.F. transformer (108-83D) if necessary

R.F. ALIGNMENT: (535-1720 K. C.)

1. With gang condenser in its minimum capacity position, plates entirely out of mesh, connect an external oscillator in series with a 200 mmf. condenser to the antenna lead and chassis ground and make the following adjustments:
   (a) with external oscillator set at 1720 kilocycles, adjust oscillator trimmer to resonance. This adjustment is on the top of rear section of variable gang condenser. (See Fig. 1).
   (b) Re-set external oscillator to 1400 kilocycles, rotate condenser, pick up oscillator signal and adjust antenna trimmer to resonance. (Top of front section of gang condenser).
   (c) Check sensitivity at 600 and 1000 kilocycles

©John F. Rider, Publisher

MONTGOMERY-WARD & CO.

MODEL 62-276

MODEL 62-276
Schematic, Voltage
Socket, Trimmers
Parts

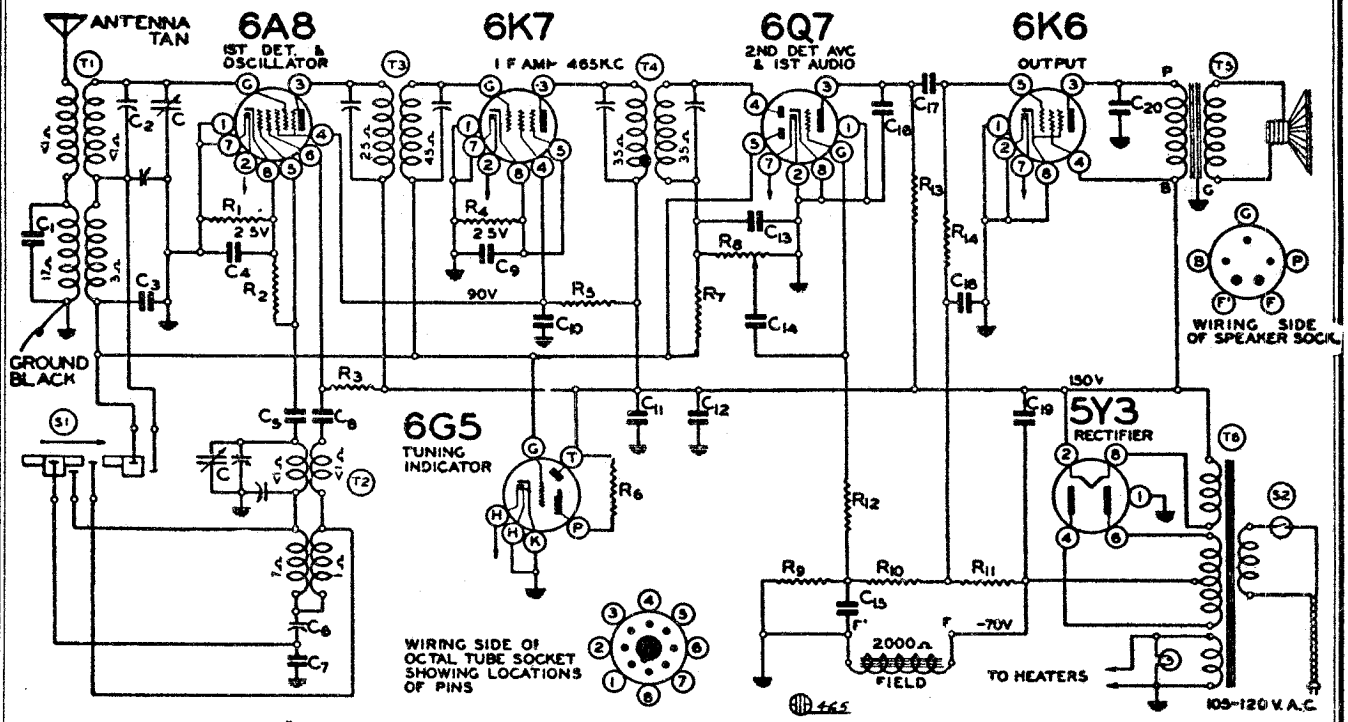

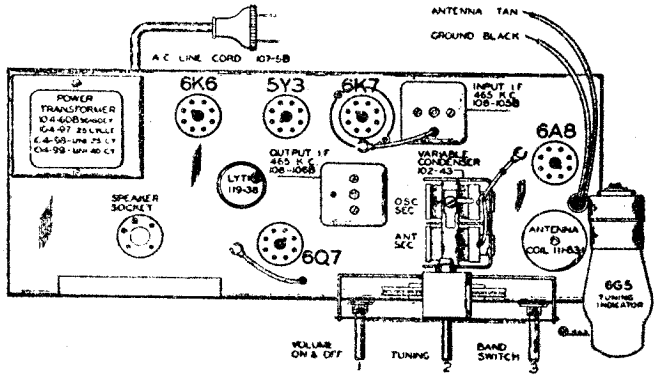

RESISTORS

Code	Part No.	Description
R1	130-83	300 ohm - 1/3 w. 10%
R2	130-12	50M - 1/3 w. - 20%
R3	130-17	10M ohm - 1/3 w. 20%
R4	130-93	450 ohm - 1/3 w. 10%
R5	130-149	15M ohm - 1/3 w. 20%
R6	130-186	250M ohm - 1/10 w. 20% - In tuning indicator socket
R7	130-4	3 megohm - 1/3 w. 20%
R8	101-71	1 meg volume control
R9	130-176	20M ohm - 1/3 w. 10%
R10	130-80	150M ohm - 1/3 w. 10%
R11	130-46	800M ohm - 1/3 w. 10%
R12	130-4	3 megohm - 1/3 w. 20%
R13	130-9	200M ohm - 1/3 w. 20%
R14	130-3	500M ohm - 1/3 w. 20%

CONDENSERS

C	102-43	2 Gang Variable
C1	129-5	.0001 - 20% Mica
C2	124-39	2-25 mmf. Adjustable cond.
C3	100-22	.05 x 200 v. 25%
C4	100-20	.1 x 200 v. 25%
C5	129-39	.00005 Mica 20%
C6	124-38	Adjustable Series Pad 600 mmf.
C7	129-54	.003 x 2-1/2% Mica
C8	100-25	.002 x 600 v. - 20%
C9	100-20	.1 x 200 v. 25%
C10	100-1	.1 x 400 v. 50% - 10%
C11	119-38	5.0 mfd. - 250 w.v. lytic
C12	100-13	.05 x 400 v. 25%
C13	129-5	.0001 Mica 20%
C14	100-11	.01 x 400 v. 25%
C15	100-20	.1 x 200 v. 25%
C16	129-2	.0005 - 20% Mica
C17	100-26	.02 x 400 v. 25%
C18	100-20	.1 x 200 v. 25%
C19	119-38	5.0 mfd. - 250 w.v. 'Lytic
C20	100-37	.003 x 600 v. 10% C11 & C19 in same unit

PARTS

T1	111-83	B.C. & S.W. Antenna Coil
T2	110-66	B.C. & S.W. Osc. Coil
T3	108-105B	Input I.F. 465 kc.
T4	108-106B	Output I.F. 465 kc.
T5	114-61	6" Dynamic speaker
T6	104-60B	Power Transformer
S1	125-37	Wave Band Switch
S2		On-Off Switch on Volume Control

IN ORDER TO PREVENT SIGNAL FROM ACTING UPON AVC AND AFFECTING ACCURACY OF VOLTAGE MEASUREMENTS, AERIAL AND GROUND LEADS SHOULD BE SHORT CIRCUITED WHILE MAKING MEASUREMENTS.

Resistances of coils and transformer windings are indicated in ohms on schematic circuit diagrams.

To check for open by-pass condensers, shunt each condenser with another condenser of the same capacity and voltage rating, which is known to be good, until the defective unit is located.

Excessive hum, stuttering, low volume and a reduction in all D.C. voltages is usually caused by a shorted electrolytic condenser, open by-pass condensers frequently cause oscillation and distorted tone.

©John F. Rider, Publisher

©John F. Rider, Publisher

MODELS 62-251, 62-255, 62-328 62-338 AND 62-428

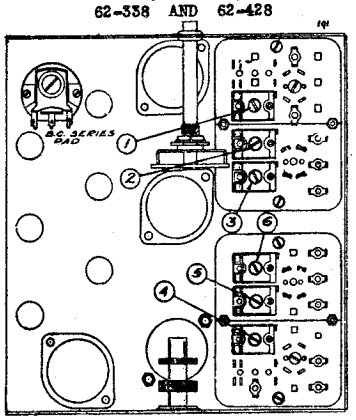

FIG. 3—BOTTOM VIEW SHOWING TRIMMERS

All adjustments should be made with a non-metallic screw driver.

RESONANCE INDICATOR:

Use as a resonance indicator an output meter connected across the primary of the speaker input transformer, or by means of an adapter between the two plate terminals of the type 19 output tube. Maximum deflection of the meter indicates resonance. Use only enough signal to get a readily readable output. A low range output meter or the low scale of a multi-range meter should be used.

DUMMY ANTENNAS

The following dummy antennas are used in aligning and are referred to in the following alignment instructions as "Dummy 1", "Dummy 2", and "Dummy 3".

Dummy 1: (I.F.)—Consists of a .1 mfd. condenser connected in series with the external oscillator.

Dummy 2: (Broadcast)—Consists of a 200 mmfd. condenser and a 20 ohm resistor connected in series with each other and in series with the external oscillator.

Dummy 3: (Middle and Short Wave)—Consists of a .1 mfd. condenser and a 400 ohm resistor connected in series with each other and in series with the external oscillator.

ALIGNING I.F. TRANSFORMERS: (465 K.C.):

Part No. 108-79 Output I.F. Transformer
Part No. 108-78 Interstage I.F. Transformer
Part No. 108-77 Input I.F. Transformer

These I.F. transformers have two adjustments, both of which are accessible from the top of chassis (see top view).

1. With volume control full on, (the extreme right of its rotation), the band changing switch in the broadcast position, (extreme left of its rotation), and with the variable condenser set to approximately 1400 kilocycles, make the following adjustments:
   (a) Connect external oscillator set at 465 kilocycles, in series with "Dummy 1", to the control grid cap of the type 34 tube, and adjust the output I.F. transformer (No. 108-79) to resonance.
   (b) With "Dummy 1" still connected, move oscillator output clip from grid of 34 to grid cap to 1A4 and adjust interstage I.F. transformer (No. 108-78) to resonance.
   (c) Move oscillator to grid cap of 1A6 and adjust input I.F. transformer (No. 108-77).

BROADCAST BAND ALIGNMENT:

535 to 1720 Kilocycles

1. With band changing switch in the broadcast position, extreme left of its rotation, and with gang condenser in its minimum capacity position, plates entirely out of mesh, and with external oscillator connected in series with "Dummy 2" to antenna and ground posts, make following adjustments:
   (a) Set external oscillator to 1720 K.C. and adjust broadcast oscillator trimmer to resonance. (Adjustment number 1; see bottom view of coil assembly, Fig. 3)
   (b) Re-set external oscillator to 1550 K.C., rotate variable gang condenser and pick up signal. Adjust broadcast antenna trimmer (adjustment number 4) to resonance; also adjust preselector trimmer which is mounted on the top of the rear section of the three gang variable tuning condenser to resonance. (See top view of chassis, Fig. 1, for location of this adjustment).
   (c) Re-set external oscillator to 600 K.C., and adjust broadcast series pad to resonance by rotating condenser to approximately 600 K.C., rocking it slowly to and fro until by adjusting series pad maximum output is attained. This adjustment is located on the bottom of the chassis directly under the variable gang condenser. (See bottom view of chassis, Fig. 3).
   (d) Repeat adjustments "a" and "b" until sensitivity is at its maximum.
   (e) Check for tracking and sensitivity at 1000 kilocycles. Under no circumstances bend plates of variable condenser sections to correct tracking.

SHORT WAVE BAND ALIGNMENT:

5.2 to 18.3 Megacycles

1. With band changing switch in the short wave position, extreme right of its rotation, and with external oscillator set at 17 megacycles and connected in series with "Dummy 3" to the antenna and ground posts, make the following adjustments:
   (a) Move dial pointer to 17 megacycles and adjust short wave oscillator (adjustment number 3) and short wave antenna (adjustment number 6) to resonance.
   (b) Re-set external oscillator to 6 megacycles and pick up signal by rotating variable condenser and check sensitivity.
   (c) Re-set external oscillator and check set at 18.1 megacycles and 5.3 megacycles for band coverage.

NOTE: It is extremely necessary in making all of these adjustments that the fundamental oscillator signal be tuned in and not the image frequency which will fall below the fundamental on the receiver dial. As an example of this a fundamental 18.3 megacycle signal can be tuned in not only at 18.3 on the dial but also at approximately 17.4 megacycles.

MIDDLE WAVE BAND ALIGNMENT:

1695 to 5500 Kilocycles

1. With band changing switch in the middle wave position, center of its rotation, and with external oscillator set at 5000 kilocycles and connected in series with "Dummy 3" to the antenna and ground posts make the following adjustments:
   (a) Move dial pointer to 5000 kilocycles and adjust middle wave oscillator (adjustment number 2) and middle wave antenna (adjustment number 5) to resonance.
   (b) Re-set external oscillator to 1800 kilocycles and pick up signal by rotating variable condenser and check sensitivity.
   (c) Re-set external oscillator and check set at 5400 kilocycles and 1700 kilocycles for band coverage.

MODEL 62-276

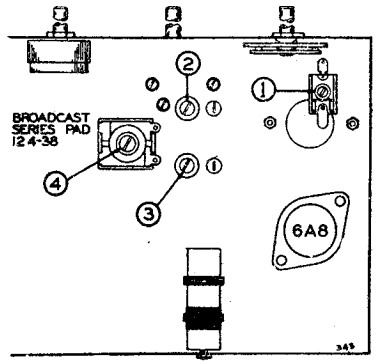

FIG. 3.—BOTTOM VIEW SHOWING TRIMMERS

RESONANCE INDICATOR:

Use as a resonance indicator an output meter connected across the primary of the speaker input transformer or by means of an adapter between the plate and screen terminals of the type 6K6G output tube. Maximum deflection of the meter indicates resonance. Use only enough signal to get a readily readable output. A low range output meter or the low scale of a multi-range meter should be used

DUMMY ANTENNAS:

The following dummy antennas are used in aligning and are referred to in the following alignment instructions as "Dummy 1", "Dummy 2", and "Dummy 3".

Dummy 1: (I.F.)—Consists of a .1 mfd. condenser connected in series with the external oscillator.

Dummy 2: (Broadcast)—Consists of a 200 mmfd. condenser and a 20 ohm resistor connected in series with each other and in series with the external oscillator.

Dummy 3: (Short Wave)—Consists of a .1 mfd. condenser and a 400 ohm resistor connected in series with each other and in series with the external oscillator.

ALIGNING I.F. TRANSFORMERS: (465 K.C.):

Part No. 108-106B Output I.F. Transformer

Part No. 108-105B Input I.F. Transformer

These I.F. transformers have two adjustments, both of which are accessible from the top of chassis (see top view).

1. With volume control full on, (the extreme right of its rotation), the band changing switch in the broadcast position, (extreme left of its rotation), and with the variable condenser in its minimum capacity position, plates entirely out of mesh, make the following adjustments:
   (a) Connect external oscillator set at 465 kilocycles, in series with "Dummy 1", to the control grid cap of the type 6K7G tube, and adjust the output I.F. transformer (No. 108-106B) to resonance.
   (b) With "Dummy 1" still connected, move oscillator output clip from grid of 6K7G to grid cap of 6A8G and adjust input I.F. transformer (No. 108-105B) to resonance.

SHORT WAVE BAND ALIGNMENT:

5.5 to 18.1 Megacycles

1. With band changing switch in the short wave position, extreme right of its rotation, and with external oscillator set at 17 megacycles and connected in series with "Dummy 3" to the antenna and ground leads, make the following adjustments:
   (a) Move dial pointer to 17 megacycles and adjust short wave oscillator trimmer to resonance.

   This adjustment is the trimmer mounted on the top of rear section of the variable gang condenser (see Fig. 1, top view).

   (b) Adjust short wave antenna trimmer (Adjustment Number 1), to resonance (see Fig. 3, bottom view).

BROADCAST BAND ALIGNMENT:

535 to 1720 Kilocycles

1. With band changing switch in the broadcast position, extreme left of its rotation, and with gang condenser in its minimum capacity position, plates entirely out of mesh, and with external oscillator connected in series with "Dummy 2" to antenna and ground leads make following adjustments:
   (a) Set external oscillator to 1720 K.C. and adjust broadcast oscillator trimmer to resonance. (Adjustment number 3, see bottom view of chassis, Fig. 3).
   (b) Re-set external oscillator to 1400 K.C., rotate variable gang condenser and pick up signal. Adjust broadcast antenna trimmer (adjustment number 2), to resonance.
   (c) Re-set external oscillator to 600 K.C., and adjust broadcast series pad (adjustment number 4), to resonance by rotating condenser to approximately 600 K.C., rocking it slowly to and fro until by adjusting series pad maximum output is attained. This adjustment is located on the bottom of the chassis directly under the variable gang condenser. (See bottom view of chassis, Fig. 3).
   (d) Repeat adjustments "a" and "b" until sensitivity is at its maximum
   (e) Check for tracking and sensitivity at 1400, 1000, and 600 kilocycles. **Under no circumstances bend plates of variable condenser sections to correct tracking.**

MONTGOMERY-WARD & CO.

MODELS 62-297,62-357,62-367
62-457.62-467,62-497
Schematic,Phono.,Specifications

MAY, 1937

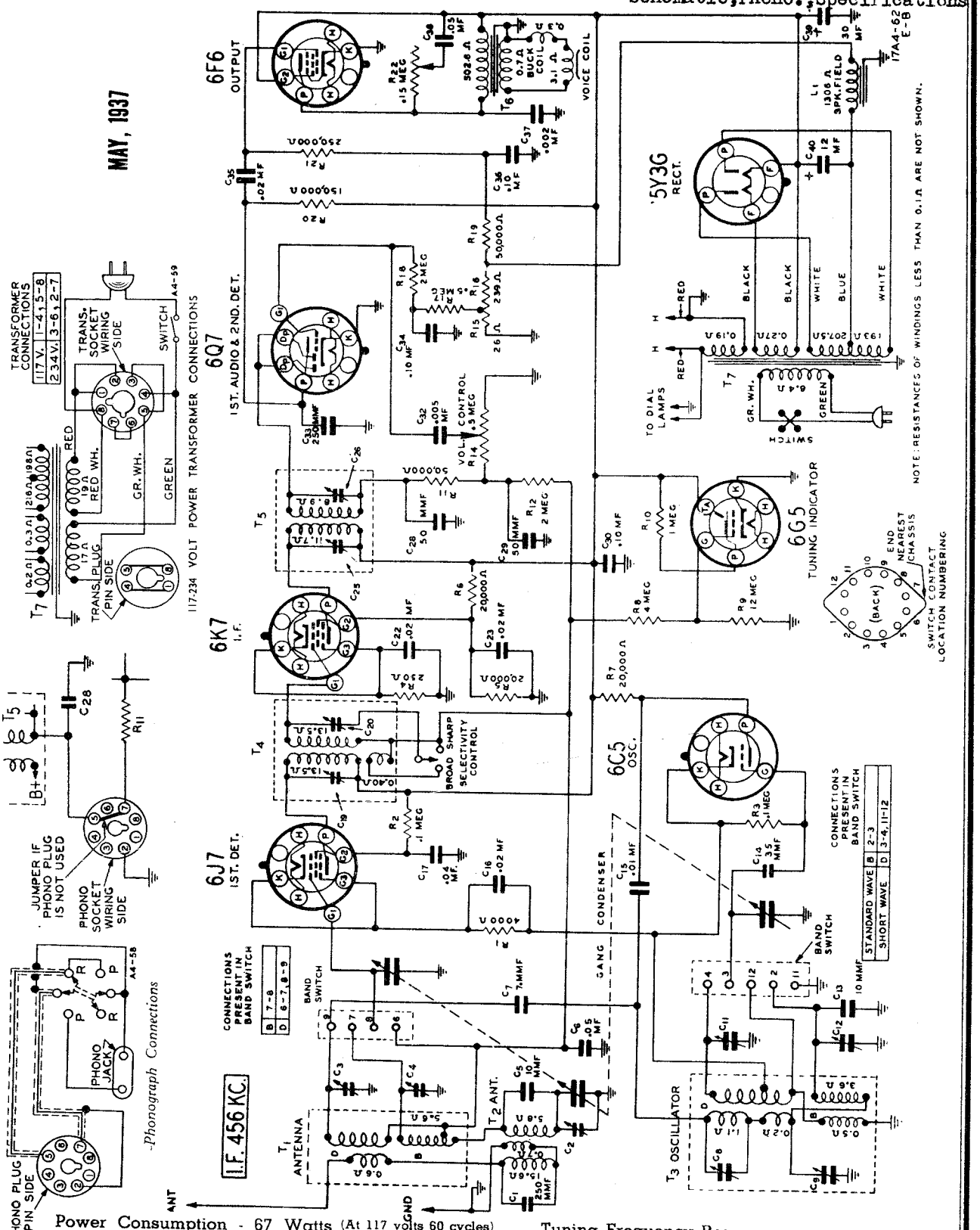

Power Consumption - 67 Watts (At 117 volts 60 cycles)

Power Output - - - - - - - - 2.5 Watts Undistorted
4.5 Watts Maximum

Selectivity - - 28 KC Broad at 1000 times Signal
(Sharp)

Intermediate Frequency - - - - - - - - 456 KC.

Speaker - - - - - - - 6" Dynamic—Mantel Models
8" Dynamic—Console Models

Tuning Frequency Range

B Range..... 528 to 1830 KC.
D Range.....5750 to 19800 KC

Sensitivity

B Range.....7 Microvolts Average
D Range.....9 Microvolts Average

©John F. Rider, Publisher

MODELS 62-297,62-357,62-367 62-457,62-467,62-497 MONTGOMERY-WARD & CO.

Socket,Trimmers,Alignment Voltage,Coils,Notes

MODEL 62-297 62-357 ALIGNMENT PROCEDURE 62-367 62-467 62-457 62-497

Volume Control—Maximum All Adjustments.
Selectivity Control—Sharp Position All Adjustments.
Connect Radio Chassis to Ground Post of Signal Generator With a Short Heavy Lead.
Allow Chassis and Signal Generator to "Heat Up" for Several Minutes.

The following equipment is required for aligning:
An All Wave Signal Generator which will provide an accurately calibrated signal at the test frequencies as listed.
Output Indicating Meter; Non-Metallic Screwdriver.
Dummy Antennas — .1 mf., 200 mmf., and 400 ohms.

STEP (Follow Order as Given)	BAND SWITCH SETTING	DUMMY ANTENNA	SIGNAL GENERATOR FREQUENCY SETTING	SIGNAL GENERATOR CONNECTION AT RADIO	TRIMMERS ADJUSTED See Illustration	PROCEDURE INITIAL STEPS	PROCEDURE ADJUSTMENT
I.F.							
2nd I.F.	Range B	.1 mf.	456 KC	Grid of I.F. Tube	2nd I.F. (C25) & (C26)	Turn Rotor to Full Open	Adjust to Maximum Output
1st I.F.	Range B	.1 mf.	456 KC	Grid of 1st Det.	1st I.F. (C19) & (C20)	Turn Rotor to Full Open	Adjust to Maximum Output
Range B							
1830 KC	Range B	200 mmf.	1830 KC	Antenna Lead	Oscillator Range B (C12)	Turn Rotor to Full Open	Adjust to Maximum Output
1500 KC	Range B	200 mmf.	1500 KC	Antenna Lead	1st Ant. Range B (C2) 2nd Ant. Range B (C4)	Turn Rotor to Max. Output Set Indicator to 1500 KC—See Note A	Adjust to Maximum Output
600 KC	Range B	200 mmf.	600 KC	Antenna Lead	600 KC (C9)	Turn Rotor to Max. Output	Adjust to Maximum Output Rock Rotor—See Note B
Range D							
19800 KC	Range D	400 ohm	19800 KC	Antenna Lead	Oscillator Range D (C11)	Turn Rotor to Full Open	Adjust to Maximum Output
16000 KC	Range D	400 ohm	16000 KC	Antenna Lead	Ant. Range D (C3)	Turn Rotor to Max. Output	Adjust to Maximum Output Rock Rotor—See Note B
6000 KC	Range D	400 ohm	6000 KC	Antenna Lead	6000 KC (C8)	Turn Rotor to Max. Output	Adjust to Maximum Output Rock Rotor—See Note B

Attenuate the signal from the signal generator to prevent the leveling-off action of the AVC.

After each range is completed, repeat the procedure as a final check.

NOTE A—In sets using the finger tip tuning dial, remove the retaining ring which holds the dial scale in position. Readjust rotor to maximum output. Hold the station selector ring and turn the dial scale until the pointer is at the 1500 KC mark. Replace the retaining ring.

NOTE B—Turn the rotor back and forth and adjust the trimmer until the peak of greatest intensity is obtained.

CAUTION—When aligning the short wave band be sure NOT to adjust at the image frequency. This can be checked as follows: Let us say the signal generator is set for 15,000 KC. The signal will then be heard at 15,000 on the dial of the radio. The image signal, which is much weaker, will be heard at 15,000 less 912 KC, or 14,088 KC on the dial. It may be necessary to increase the input signal to hear the image.

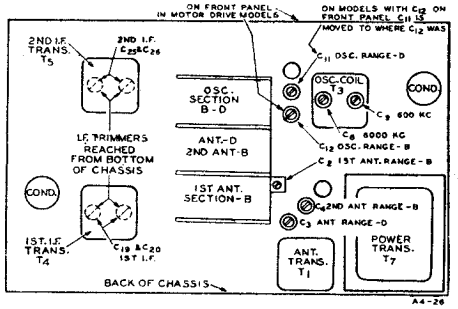

Location of Trimmers

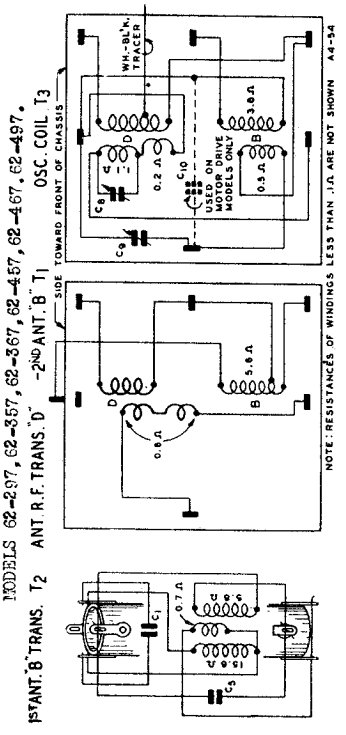

Coil Terminal Arrangement and D.C. Resistance of Windings

Twenty-Five Cycle Models

The twenty-five cycle receiver differs from the sixty cycle receiver only in the fact that a different power transformer is used.

The twenty-five cycle receiver can be operated satisfactorily from a sixty cycle power supply. However, the reverse is not true, the sixty cycle receiver cannot be operated from a twenty-five cycle power supply.

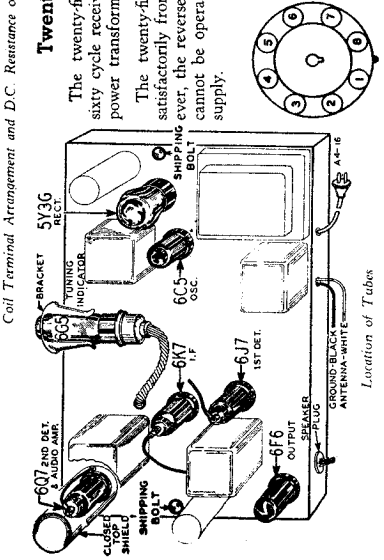

Location of Tubes

Octal Tube Terminal Numbering (bottom of socket).

VOLTAGES AT SOCKETS

Line Voltage: 117—Volume Control: Maximum
Readings taken with 1000 Ohm-per-volt meter
Antenna Shorted to Ground
Position of Band Switch: Standard Wave

TUBE	FUNCTION	VOLTAGE BETWEEN SOCKET PRONG AND GROUND (Unless otherwise indicated) Prong No. 1	Prong No. 2	Prong No. 3	Prong No. 4	Prong No. 5	Prong No. 6	Prong No. 7	Prong No. 8
		Plate to Ground 20		Target to Ground 230		Cathode to Ground 0		Across Heater 6.3 A.C.	
6J7	1st Det.	0	6.2(1)	230	145	9.5		6.2(1)	9.5
6K7	I.F.	0	6.2(1)	230	100	2.0		6.2(1)	2.0
6C5	Os.	0	6.2(1)	140				6.2(1)	0
6Q7	1st Audio & 2nd Det.	0	6.2(1)	100				6.2(1)	0(2)
6F6	Power Amp.	0	6.2(1)	210	230			6.2(1)	0(3)
5Y3G	Rectifier	0	5.0(4)		630(5)		630(5)		5.0(4)
6G5	Tuning Indicator								

(1) A.C. voltage as read across heater terminals 2 and 7.
(2) Bias (1.5 volts) as read across resistor R15.
(3) Bias (14 volts) as read across resistors R15 and R16.
(4) A.C. voltage as read across heater terminals 2 and 8.
(5) A.C. voltage as read across terminals 4 and 6.

©John F. Rider, Publisher

MODELS 62-370,62-470,62-700
Installation of Model 62-298

MONTGOMERY-WARD & CO.

MODEL 62-298
Remote Control Unit
Description

MODEL 62-298

FOR USE WITH AIRLINE RADIO

MODELS—62-370	62-403	62-700
62-390	62-470	62-900
62-401	62-490	62-1100

DESCRIPTION

The control consists of three main units, namely, the Remote Push-Button Assembly, the Magnet Assembly and the Relay Assembly.

Fig. 1 shows the three units with their proper names indicated. Also, attention is directed to various parts of each unit to which names have been assigned for the purpose of making reference in the installation procedure which is given step by step for each radio model on the following pages.

To attach the units to any of the radio models listed above, procede in accordance with the instructions given for each model. Read over very carefully the procedure and study the illustrations to become familiar with the few important items of installation, such as the armature arms, plungers, latch bar, locating pins and locating holes.

Any stations which have been set up on the automatic tuning buttons at the radio may be selected at the remote position. Station call letters are supplied for the Remote Push-Button Assembly. Punch out from the sheets of station call letter tabs the call letters of the stations which have been set up for the automatic push-buttons on the front of the radio.

Pressing the button on the Remote Push-Button Assembly nearest the end from which the connector cable comes out will select the extreme right hand automatic push-button on the front of the radio cabinet. The second button from the cable end of the Remote Push-Button Assembly will select the second automatic push-button from the right hand side of the radio and so on.

Moisten the back of the station call letter tabs and paste them into the rectangular openings in the Remote Push-Button Assembly alongside their respective buttons.

LOCATION

The location of each unit is plainly shown in the illustrations of the radio models on the following pages of this instruction booklet.

In general, the Magnet Assembly is mounted on the top of the radio chassis over a rectangular hole which is covered with a removable cover plate. The purpose of this unit is to electrically operate the automatic push-buttons on the front of the radio, from a remote location. The Relay Assembly is mounted by means of two wood screws to the underside of the chassis cabinet shelf, (on mantle models mount the relay beside the radio chassis). The purpose of this unit is to control the Magnet Assembly.

CAUTION

Withdraw the A. C. line cord plug for the radio from the house lighting current and **do not re-insert** it or the A. C. line cord plug for the Remote Control Assembly until all of the steps incidental to the actual installation of the Remote Control units to the radio have been completed.

INSTALLATION AND OPERATING SUGGESTIONS

In the Installation Procedure, you will note certain tubes have been removed. This was done to render the top of the chassis more accessible for the actual installation of the Magnet Assembly. NOTE: If difficulty is encountered installing the Magnet Assembly on the top of the chassis while mounted in the cabinet, remove the radio chassis from the cabinet. Be sure to replace the tubes in their proper sockets and connect the grid cap wire to the cap of any tubes of this type which were removed.

After the Remote Control units are completely installed and the radio placed in operation, stations can be selected automatically by pressing any one of the buttons of the Remote Control Assembly. The stations, of course, must first be set up by adjusting the setting screws on the front of the radio. For specific information, see the instructions on this procedure in the Operating Instruction book supplied with the radio.

To select a station from the Remote Control Push-Button Assembly, press down on the button. DO NOT HOLD THE BUTTON DOWN. Press only one push-button at a time. Continual abuse of pushing down more than one button at a time or holding down buttons for a longer period than 30 seconds may result in the tube in the Relay Assembly burning out or damage to the coils in the Magnet Assembly.

INSTALLATION PROCEDURE

MODELS 62-370, 62-470, and 62-700—7 TUBE MANTLE and CONSOLE

1. Disconnect the power supply cord for the radio from the house lighting current and **do not re-insert** the plug until the following procedure for installing the remote control units has been fully completed:
2. Remove the push button escutcheon plate on the front of the radio cabinet and unscrew all six station setting screws all the way out (counter-clockwise).
3. Referring to Fig. 2, note that the following four tubes have been removed:
   - 6K6G Output Tube
   - 6Q7G 2nd Detector Tube
   - 6U7G 1. F. Tube
   - 6A8G 1st Detector Tube
4. Remove the cover plate on the top of the chassis by taking out four screws. Fig. 3 is a view of the chassis showing the cover plate removed.
5. Pick up the Magnet Assembly (see Fig. 1)—note that there are six armature arms, each of which is slotted.
6. Before placing the Magnet Assembly in position, put the four screws which were used to hold the cover plate to the chassis into the mounting holes of the frame of the Magnet Assembly. Four very thin fibre washers are supplied which are used to hold the mounting screws in the mounting holes until the Magnet Assembly is lowered into position. For details on how to use these fibre washers to the best advantage, see drawing Fig. D, Page 8.
7. Referring to Fig. 3, place the Magnet Assembly in position as shown so that the slots in the armatures are directly over the plungers. Now carefully lower the Magnet Assembly so that the plungers enter the slots in the armatures. A screwdriver will be helpful in lining up any armature which may not be directly over the plungers.
8. The armatures must slip over the plunger between the latch bar and the shoulder of the plunger (see Fig. 3); also, refer to drawing (Fig. A, Page 8) which illustrates this point more clearly.
9. Rest the Magnet Assembly on the chassis base and move it slightly toward the back of the radio until the locating pins (see Fig. 1) on each side of the Magnet Assembly frame slip into the locating holes at both sides of the opening in the chassis base (see Fig. 3).
10. Hold the Magnet Assembly in place and fasten it securely to the chassis base by means of the four screws.
11. Referring to Fig. 4, mount the relay to the underside of the chassis shelf, using the two wood screws and two spacer washers supplied. On mantle models mount the relay beside the radio chassis. Place the spacer washers between the base of the Relay Assembly and the cabinet shelf, passing the wood screws through the holes in the spacer washers. Arrange the wire connector cables to the Magnet Assembly and Relay Assembly beside the tube socket base as shown in Fig. 4 and put the four tubes which were removed back into their respective sockets. CAUTION—be sure to put the tubes back into the proper sockets.
12. Reset stations for the automatic push-buttons, by means of the station setting screws on the front of the radio. For the complete procedure on this subject, consult the instruction book supplied with the radio.

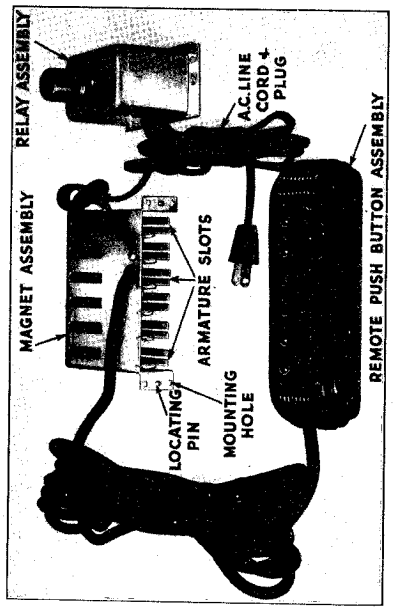

FIG. 1 GENERAL VIEW

©John F. Rider, Publisher

MODEL 62-298
Installation in
MODELS 62-390,62-490.62-900

MONTGOMERY-WARD & CO.

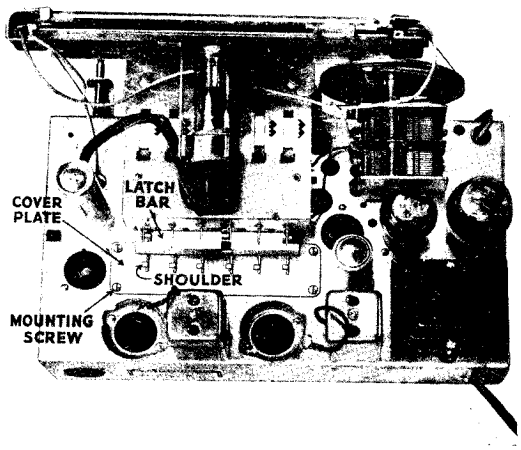

FIG. 2

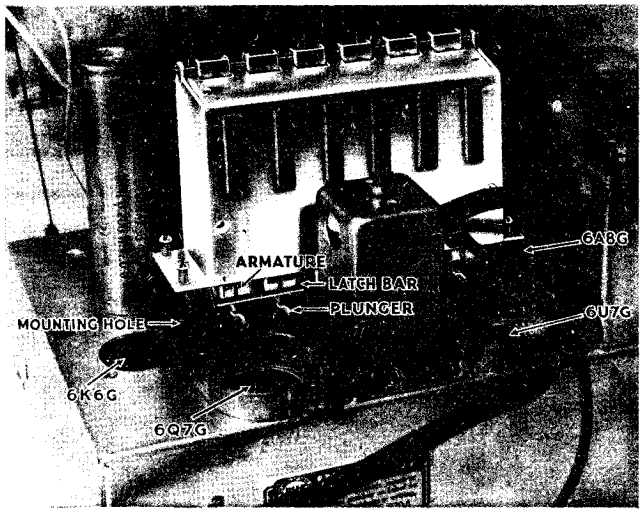

FIG. 3

MODELS 62-390, 62-490, and 62-900

9 TUBE MANTLE and CONSOLE

INSTALLATION PROCEDURE

1. Disconnect the power supply cord for the radio from the house lighting current and **do not re-insert** the plug until the following procedure for installing the remote control units has been fully completed:
2. Referring to Fig. 5, note that the following two tubes have been removed:
   5Y3G Rectifier Tube
   6I5G Second Detector Tube
3. Remove the cover plate on the top of the chassis by taking out four screws. Fig. 5 is a view of the chassis showing the cover plate removed.
4. Before placing the Magnet Assembly in position, put the four screws which were used to hold the cover plate to the chassis into the mounting holes of the frame of the Magnet Assembly. Four very thin fibre washers are supplied which are used to hold the mounting screws in the mounting holes until the Magnet Assembly is lowered into position. For details on how to use these fibre washers to the best advantage, see drawing Fig. D, Page 8.
5. Pick up the Magnet Assembly (see Fig. 1)—note that there are six armature arms, each of which is slotted.
6. Referring to Fig. 5, place the Magnet Assembly in position as shown, so that the slots in the armatures are directly over the plungers. Now, carefully lower the Magnet Assembly so that the plungers enter the slots in the armatures. A screwdriver will be helpful in lining up any armature which may not be directly over the plungers.
7. The armatures must slip over the plunger in front of the shoulder of the plunger (see Fig. 5); also, refer to drawing (Fig. C, Page 8) which illustrates this point more clearly.
8. Reset the Magnet Assembly on the chassis base and move it slightly toward the back of the radio until the locating pins (see Fig. 1) on each side of the Magnet Assembly frame slip into the locating holes at both sides of the opening in the chassis base (see Fig. 5).
9. Hold the Magnet Assembly in place and fasten it securely to the chassis base by means of the four screws.
10. Referring to Fig. 6, mount the relay to the underside of the chassis shelf, using the two wood screws and two spacer washers supplied. On mantle radios, mount the relay beside the radio chassis. Place the spacer washers between the base of the Relay Assembly and the cabinet shelf, passing the wood screws through the holes in the spacer washers.
11. Arrange the wire connector cables to the Magnet Assembly and Relay Assembly as shown in Fig. 6 and put the two tubes which were removed back into their respective sockets.

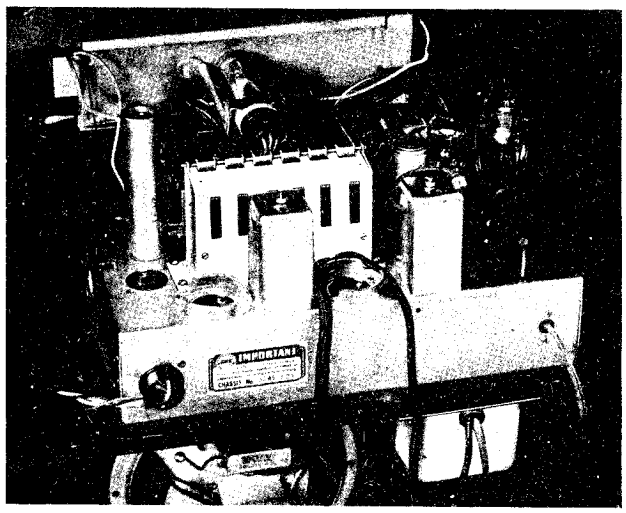

FIG. 4

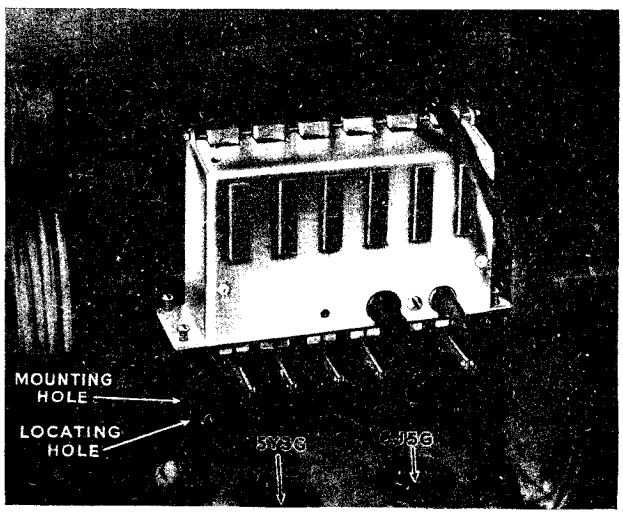

FIG. 5

©John F. Rider, Publisher

©John F. Rider, Publisher

INSTALLATION PROCEDURE

MODELS 62-401 and 62-1100—11 TUBE CONSOLE

1. Disconnect the power supply cord for the radio from the house lighting current and **do not re-insert** the plug until the following procedure for installing the remote control units has been completed:

2. Referring to Fig. 7 note that the 6U7G I.F. tube has been removed.

3. Remove the cover plate on the top of the chassis by taking out four screws. Fig. 7 shows the cover plate removed and the Magnet Assembly in position to be lowered into place.

4. Pick up the Magnet Assembly (see Fig. 1)—note that there are six armature arms, each of which is slotted.

5. Before placing the Magnet Assembly in position, put the four screws which were used to hold the cover plate to the chassis into the mounting holes of the frame of the Magnet Assembly. Four very thin fibre washers are supplied which are used to hold the mounting screws in the mounting holes until the Magnet Assembly is lowered into position. For details on how to use these fibre washers to the best advantage see drawing Fig. D, Page 8.

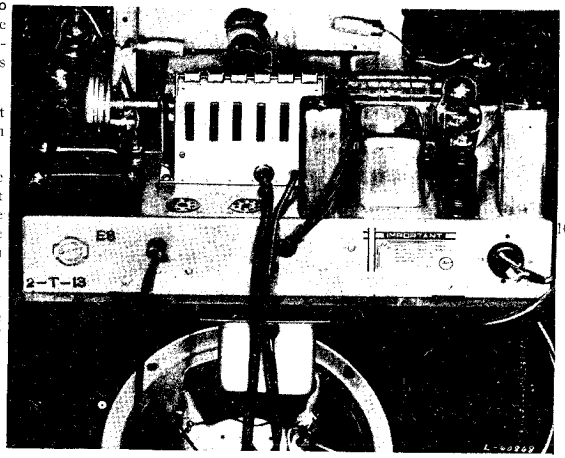

FIG. 6

6. Referring to Fig. 7, place the Magnet Assembly in position as shown so that the slots in the armature arms are directly over the plungers. Now, carefully lower the Magnet Assembly so that the plungers enter the slots in the armatures. A screwdriver will be helpful in lining up any armature which may not be directly over the plungers.

7. The armatures must slip over the plungers between the latch bar and the shoulder of the plunger (see Fig. 7); also, refer to drawing (Fig. B, Page 8) which illustrates this point more clearly.

8. Rest the Magnet Assembly on the chassis base and move it slightly toward the back of the radio until the locating pins (see Fig. 1) on each side of the Magnet Assembly frame slip into the locating holes at both sides of the opening in the chassis base (see Fig. 7).

9. Hold the Magnet Assembly in place and fasten it securely to the chassis base by means of the four screws.

10. Referring to Fig. 8, mount the Relay Assembly to the underside of the chassis shelf, using the two wood screws and two spacer washers supplied. Place the spacer washers between the base of the Relay Assembly and the cabinet shelf, passing the screws through the holes in the spacer washers. Arrange the wire connector cables to the Magnet Assembly and Relay Assembly as shown in Fig. 8 and put the 6U7G tube back in the socket.

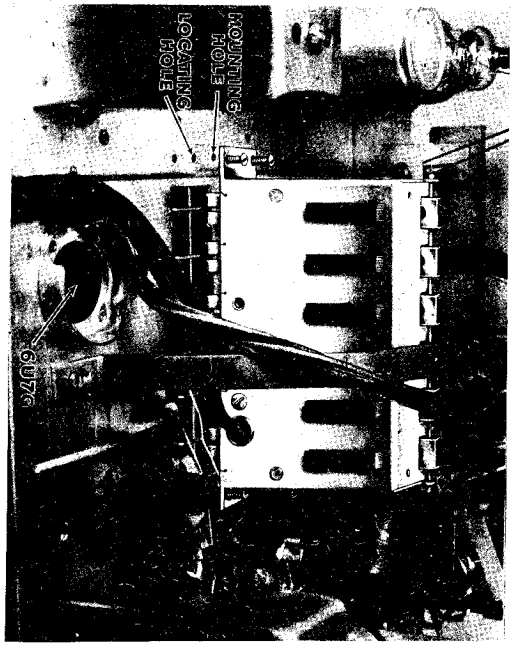

FIG. 7

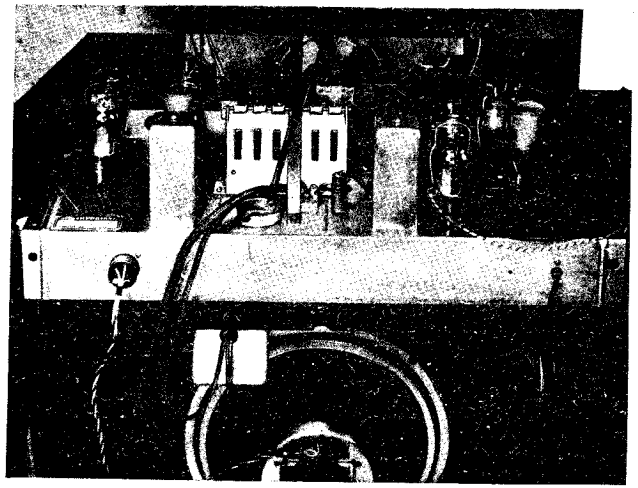

FIG. 8

INSTALLATION PROCEDURE MODEL 62-403—13 TUBE CONSOLE

1. Disconnect the power supply cord for the radio from the house lighting current and **do not re-insert** the plug until the following procedure for installing the remote control units has been completed:

2. Referring to Fig. 9, note that the following two tubes have been removed:

   6U7G 1st I.F. Tube
   6U7G 2nd I. F. Tube

3. Remove the cover plate on the top of the chassis by taking out four screws. Before placing the Magnet Assembly in position, put the four screws which were used to hold the cover plate to the chassis into the mounting holes of the frame of the Magnet Assembly. Four very thin fibre washers are supplied which are used to hold the mounting screws in the mounting holes until the Magnet Assembly is lowered into position. For details on how to use these fibre washers to the best advantage, see drawing Fig. D, Page 8.
   Fig. 9 shows the cover plate removed and the Magnet Assembly placed to the left of the opening in the chassis tipped slightly forward to illustrate the method of getting it into proper position under the bracket which supports the movie dial lamp assembly. **Precaution should be taken when placing the Magnet Assembly** in place—not to scratch the dial film of the movie dial.

4. Pick up the Magnet Assembly and move it to the right so that it is directly over the opening in the chassis. Fig. 10 shows the Magnet Assembly in proper position for lowering. Note that there are six armature arms, each of which is slotted.

5. Hold the Magnet Assembly so that the slots in the armatures are directly over the plungers. Now, carefully lower the Magnet Assembly so that the plungers enter the slots in the armatures. A screwdriver will be helpful in lining up any armature which may not be directly over the plungers.

6. The armatures must slip over the plunger between the latch bar and the shoulder of the plunger (see Fig. 10); also, refer to drawing (Fig. B, Page 8) which illustrates this point more clearly.

7. Rest the Magnet Assembly on the chassis base and move it slightly toward the back of the radio until the locating pins (see Fig. 1) on each side of the Magnet Assembly frame slip into the locating holes at both sides of the opening in the chassis base (see Fig. 10).

8. Hold the Magnet Assembly in place and fasten it securely to the chassis base by means of the four screws.

9. Referring to Fig. 11, mount the relay to the underside of the chassis shelf, using the two wood screws and two spacer washers supplied. Place the spacer washers between the base of the Relay Assembly and the cabinet shelf, passing the screws through the holes in the spacer washers. Arrange the wire connector cables to the Magnet Assembly and Relay Assembly as shown in Fig. 11 and put the two tubes which were removed back into their respective sockets.

MODEL 62-298
Assembly, Schematic
Parts, Data

MONTGOMERY-WARD & CO.

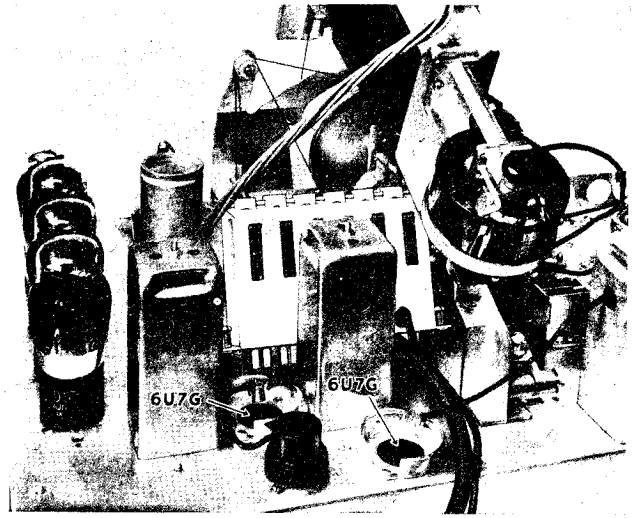

FIG. 9

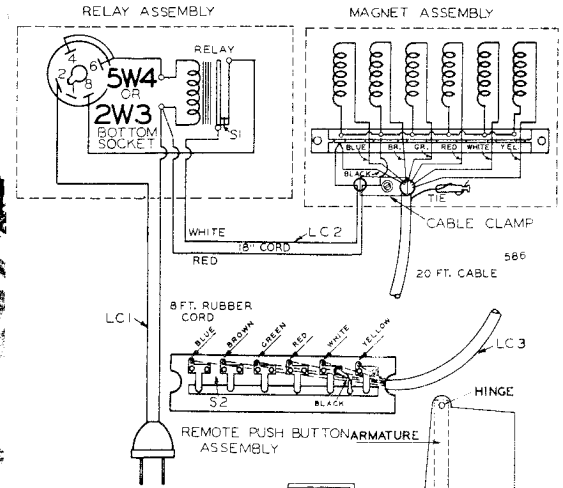

LIST OF REPAIR PARTS

Bin No.	Part No.	Schematic Reference	Description	No. Used	Selling Price Each
			REMOTE PUSH BUTTON ASSEMBLY		
	BE112448		Remote Push Button Assembly, Complete with 20 foot Connector Cable	1	3.50
	BE112424		Burl Walnut Shell for Remote Push Button Assembly	1	.70
	BE112441		Set of Sheets Station Call Letter Tabs	1	.15
	BE128167		Moulded Push Buttons	6	.06
	BE107176	LC3	20 Foot Connector Cable	1	2.00
	BE112424D	S2	Contact Strip for Remote Assembly Complete with Terminal Board	1	.70
	BE112424B		Bottom Cover for Remote Push Button Assembly	1	.04
			RELAY ASSEMBLY PARTS		
	BE112449		Relay Assembly Complete (Less Tube)	1	1.50
	2W3 or 5W4		Tube (Mounted in Relay Assembly)	1	
	BE12195		Five Prong Octal Socket for 2W3 or 5W4 Tube	1	.10
	BE115217		Housing Cover for Relay Assembly	1	.10
	BE115218		Housing Base for Relay Assembly	1	.04
	BE115219		Bracket for Relay	1	.04
	BE12557		Relay Coil Unit and Switch Assembly	1	1.20
	BE12559	S1	Switch and Contact Assembly for Relay	1	.20
	BE117377		Stud for Mounting Housing Cover	1	.06
	BE107172	LC2	Two Conductor Cord (18" used to Connect Relay Assembly to Magnet Assembly)	1	.10
	BE107175	LC1	Line Cord and Plug (8 Feet)	1	.24
	BE131204		Steel Spacer Washer (Used for Mounting Relay Unit in Cabinet)	2	.01
			MAGNET ASSEMBLY PARTS		
	BE112450		Magnet Assembly Complete with 6 Coils and 6 Armatures Mounted on 115198 Frame	1	2.50
	BE115198		Frame for Magnet Assembly	1	.20
	BE113105		Terminal Strip	1	.24
	BE113104		Insulating Strip (Mounts Under Terminal Strip)	1	.04
	BE1235		Coil Windings for Magnet Assembly	6	.24
	BE115201		Armature Complete	6	.12
	BE117375		Support Rod for Armatures	1	.02
	BE120193		Spring for Armatures	6	.03
	BE127105		Thin Fibre Washer (Used for Mounting Magnet Assembly to Chassis	4 Doz.	.08

Form 204-3M—7-38

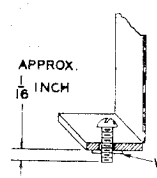

FIG. D

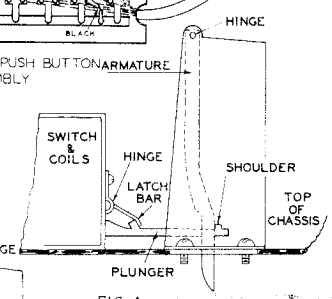

FIG. A

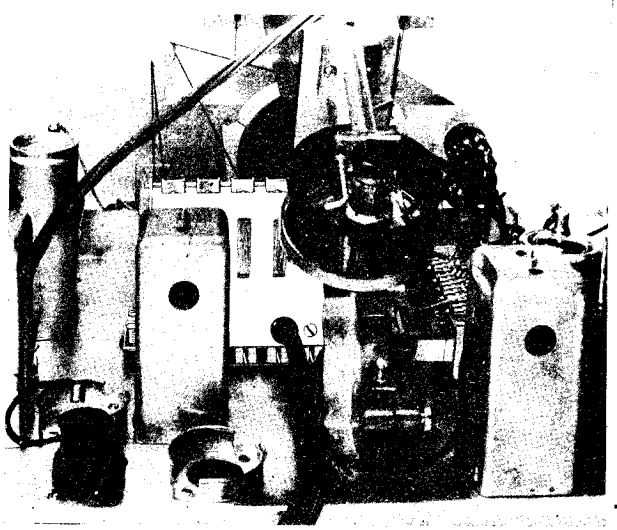

FIG. 10

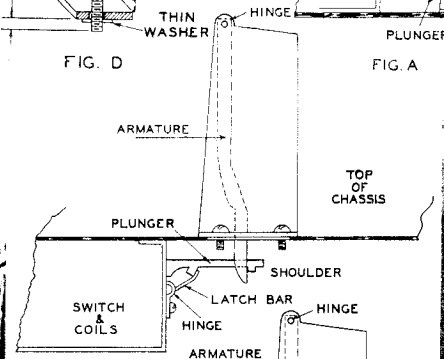

FIG. B

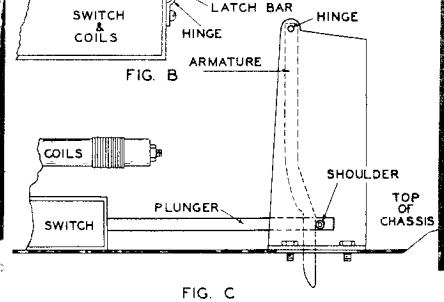

FIG. C

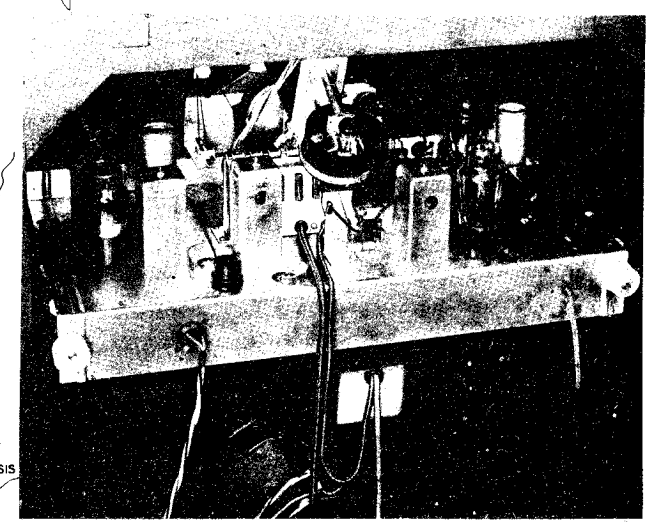

FIG. 11

©John F. Rider, Publisher

MODELS 62-301, 62-301X

MONTGOMERY-WARD & CO. Schematic, Socket, Trimmers

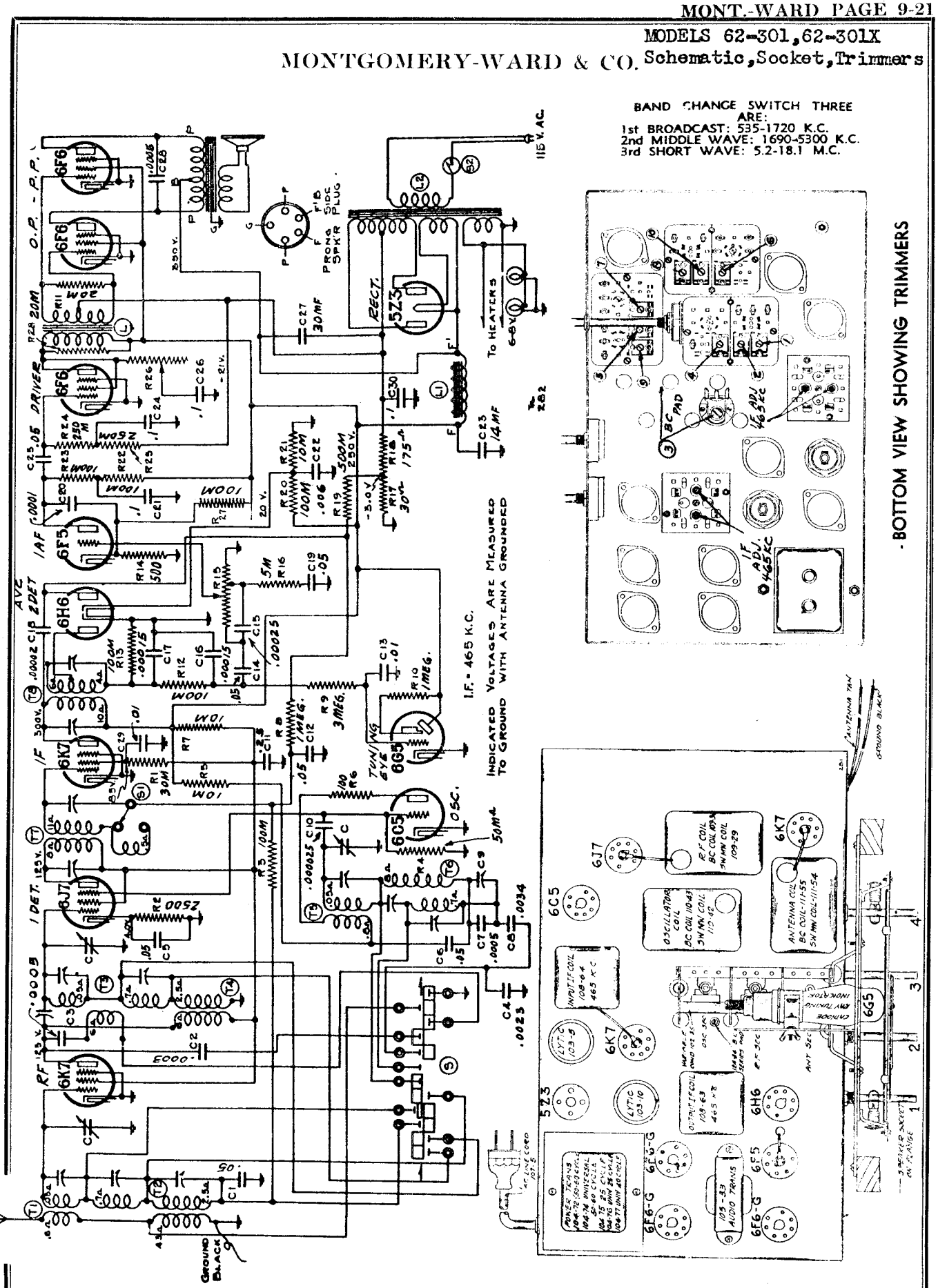

©John F. Rider, Publisher

©John F. Rider, Publisher

MODELS 62-301 and 62-301X

ALIGNING I.F. TRANSFORMERS: (465 K.C.):

Part No. 108-63 Output I.F. Transformer
Part No. 108-64 Input I.F. Transformer

These I.F. transformers have two adjustments, both of which are accessible from the underside of chassis (see bottom view, Fig. 3).

1. With volume control full on, (the extreme right of its rotation), the wave changing switch in the broadcast position, (extreme left of its rotation), the tone control on "HI" part of the sharp position (as much right rotation as possible without operating the Hi Fidelity switch), and with the variable condenser set to approximately 1400 kilocycles, make the following adjustments:

   (a) Connect external oscillator set at 465 kilocycles, in series with "Dummy 1", to the control grid cap of the type 6K7 tube, located between the two I.F. transformers, and adjust the output I.F. transformer 108-63 to resonance.

   (b) With "Dummy 1" still connected, move oscillator output clip from grid of 6K7 to grid cap to 6J7 and adjust input I.F. transformer (108-64) to resonance.

   (c) With oscillator still connected to 6J7, re-adjust output I.F. transformer if necessary.

DUMMY ANTENNAS:

The following dummy antennas are used in aligning and are referred to in the following alignment instructions as "Dummy 1," "Dummy 2," and "Dummy 3."

Dummy 1: (I.F.)—Consists of a .1 mfd. condenser connected in series with the external oscillator.

Dummy 2: (Broadcast—Consists of a 200 mmfd. condenser and a 20 ohm resistor connected in series with each other and in series with the external oscillator.

Dummy 3: (Middle and Short Wave)—Consists of a .1 mfd. condenser and a 400 ohm resistor connected in series with each other and in series with the external oscillator.

BROADCAST BAND ALIGNMENT:
535 to 1720 Kilocycles

1. With band changing switch in the broadcast position, extreme left of its rotation, and with external oscillator set at 600 kilocycles and connected in series with "Dummy 2" to the tan antenna and black ground lead, make the following adjustments:

   (a) Adjust broadcast series pad (adjustment number 3) to resonance with oscillator. Keep set in tune with oscillator by slowly rocking to and fro the variable condenser until maximum output is obtained. Note: This adjustment is accessible from the top of the chassis and is located between the variable condenser and the 108-63 output I.F. transformer. See top view, Fig. 1.

   (b) Re-set external oscillator to 1400 K.C., move dial pointer to 1400 K.C. and adjust oscillator (adjustment number 4), R.F. (adjustment number 6) and antenna (adjustment number 7) to resonance. See bottom view for location of these adjustments, Fig. 3.

   (c) Repeat adjustments "a" and "b" until sensitivity is at its maximum.

   (d) Check for tracking and sensitivity at 1000 kilocycles. **Under no circumstances bend plates of variable condenser sections to correct tracking.**

SHORT WAVE BAND ALIGNMENT:
5.2 to 18.1 Megacycles

1. With band changing switch in the short wave position, extreme right of its rotation, and with external oscillator set at 17 megacycles and connected in series with "Dummy 3" to the tan antenna and black ground lead, make the following adjustments:

   (a) Move dial pointer to 17 megacycles and adjust short wave oscillator (adjustment number 1), short wave R.F. (adjustment number 8) and short wave antenna (adjustment number 9) to resonance.

   (b) Re-set external oscillator to 6 megacycles and pick up signal by rotating variable condenser and check for sensitivity.

NOTE: **It is extremely necessary in making all of these adjustments that the fundamental oscillator signal be tuned in and not the image frequency which will fall below the fundamental on the receiver dial. As an example of this a fundamental 18.3 megacycle can be tuned in not only at 18.3 on the dial, but also at approximately 17.4 megacycles.**

MIDDLE WAVE BAND ALIGNMENT:
1690 to 5300 Kilocycles

1. With band changing switch in the middle wave position, center of its rotation, and with external oscillator set at 5 M.C. and connected in series with "Dummy 3" to the tan antenna and black ground lead, make the following adjustments:

   (a) Rotate condenser, pick up signal and adjust middle wave R.F. (adjustment number 10), middle wave antenna (adjustment number 5) and middle wave oscillator (adjustment number 2) to resonance.

   (b) Re-check broadcast alignment and if it is found necessary to re-adjust either R.F. or antenna trimmers, repeat the 17 M.C. short wave and 5 M.C. middle wave adjustments.

MODELS 62-305, 62-385, 62-405, 62-414 AND 62-495

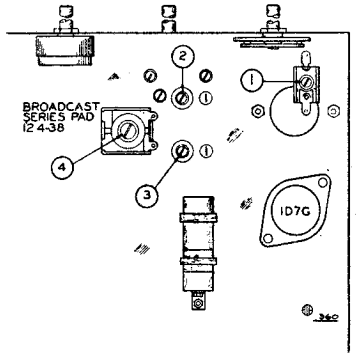

FIG. 3.—BOTTOM VIEW SHOWING TRIMMERS

RESONANCE INDICATOR

Use as a resonance indicator an output meter connected across the primary of the speaker input transformer, or by means of an adapter between the plate and screen terminals of the type 1G5G output tube. Maximum deflection of the meter indicates resonance. Use only enough signal to get a readily readable output. A low range output meter or the low scale of a multi-range meter should be used.

DUMMY ANTENNAS:

The following dummy antennas are used in aligning and are referred to in the following alignment instructions as "Dummy 1", "Dummy 2", and "Dummy 3".

Dummy 1: (I.F.)—Consists of a .1 mfd. condenser connected in series with the external oscillator.

Dummy 2: (Broadcast)—Consists of a 200 mmfd. condenser and a 20 ohm resistor connected in series with each other and in series with the external oscillator.

Dummy 3: (Short Wave)—Consists of a .1 mfd. condenser and a 400 ohm resistor connected in series with each other and in series with the external oscillator.

ALIGNING I.F. TRANSFORMERS: (465 K.C.):

Part No. 108-77B Input I. F. Transformer
Part No. 108-78B Interstage I. F. Transformer
Part No. 108-79B Output I. F. Transformer

These I. F. transformers have two adjustments, both of which are accessible from the top of chassis (see Fig. 1, top view).

1. With volume control full on, (the extreme right of its rotation), the band changing switch in the broadcast position, (extreme left of its rotation), and with the variable condenser set to approximately 1400 kilocycles, make the following adjustments:

   (a) Connect external oscillator set at 465 kilocycles, in series with "Dummy 1", to the control grid cap of the type 1D5G Interstage I. F. tube, and adjust the output I.F. transformer (No. 108-79B) to resonance.

   (b) With "Dummy 1" still connected, move oscillator output clip from grid of 1D5G to grid cap to 1D5G Input I.F. Tube and adjust interstage I.F. transformer (No. 108-78B) to resonance.

   (c) Move oscillator to grid cap of 1D7G oscillator, first detector tube and adjust input I.F. transformer (No. 108-77B) to resonance.

SHORT WAVE BAND ALIGNMENT:
2000 to 7000 Kilocycles

1. With band changing switch in the short wave position, extreme right of its rotation, and with external oscillator set at 6 megacycles and connected in series with "Dummy 3" to the antenna and ground leads, make the following adjustments:

   (a) Move dial pointer to 6 megacycles and adjust short wave oscillator trimmer to resonance.

   This adjustment is the trimmer mounted on the top of rear section of the variable gang condenser (see Fig. 1, top view).

   (b) Adjust short wave antenna trimmer (Adjustment Number 1), to resonance (see Fig. 3, bottom view).

BROADCAST BAND ALIGNMENT:
535 to 1720 Kilocycles

1. With band changing switch in the broadcast position, extreme left of its rotation, and with gang condenser in its minimum capacity position, plates entirely out of mesh, and with external oscillator connected in series with "Dummy 2" to antenna and ground leads make following adjustments:

   (a) Set external oscillator to 1720 K.C. and adjust broadcast oscillator trimmer to resonance. (Adjustment number 3), (see bottom view of Chassis, Fig. 3).

   (b) Re-set external oscillator to 1400 K.C., rotate variable gang condenser and pick up signal. Adjust broadcast antenna trimmer (adjustment number 2), to resonance.

   (c) Re-set external oscillator to 600 K.C., and adjust broadcast series pad (adjustment number 4), to resonance by rotating condenser to approximately 600 K.C., rocking it slowly to and fro until by adjusting series pad maximum output is attained. This adjustment is located on the bottom of the chassis directly under the variable gang condenser. (See bottom view of chassis, Fig. 3.)

   (d) Repeat adjustments "a" and "b" until sensitivity is at its maximum.

   (e) Check for tracking and sensitivity at 1400, 1000, and 600 kilocycles. **Under no circumstances bend plates of variable condenser sections to correct tracking.**

MONTGOMERY-WARD & CO.

MODELS 62-302, 62-312, 62-442, 62-452
Schematic, Voltage, Socket

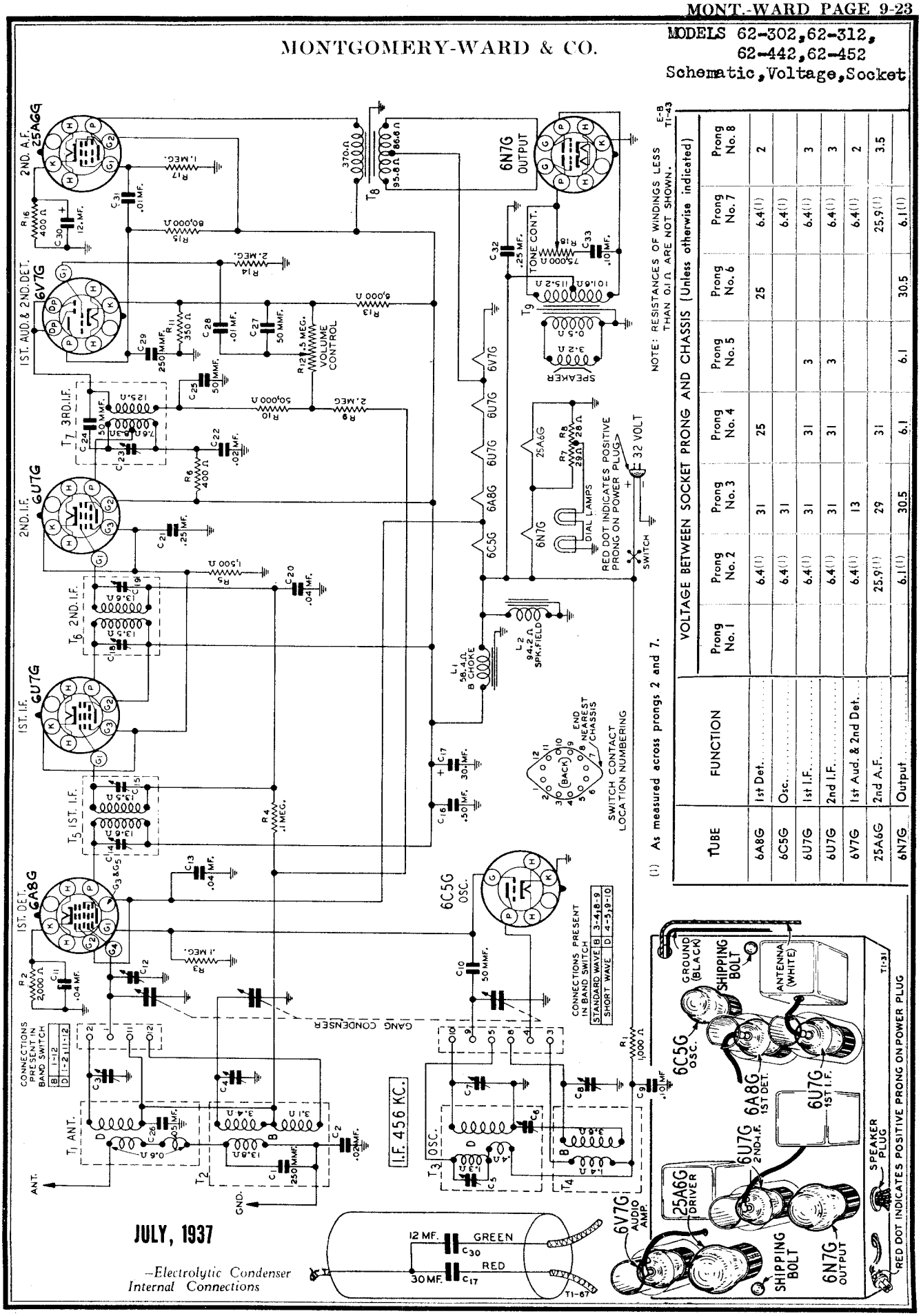

NOTE: RESISTANCES OF WINDINGS LESS THAN 0.1 Ω ARE NOT SHOWN. E-B T1-43

VOLTAGE BETWEEN SOCKET PRONG AND CHASSIS (Unless otherwise indicated)

TUBE	FUNCTION	Prong No. 1	Prong No. 2	Prong No. 3	Prong No. 4	Prong No. 5	Prong No. 6	Prong No. 7	Prong No. 8
6A8G	1st Det.		6.4(1)	31	25		25	6.4(1)	2
6C5G	Osc.		6.4(1)	31				6.4(1)	
6U7G	1st I.F.		6.4(1)	31	31	3		6.4(1)	3
6U7G	2nd I.F.		6.4(1)	31	31	3		6.4(1)	3
6V7G	1st Aud. & 2nd Det.		6.4(1)	13				6.4(1)	2
25A6G	2nd A.F.		25.9(1)	29	31			25.9(1)	3.5
6N7G	Output		6.1(1)	30.5	6.1	6.1	30.5	6.1(1)	

(1) As measured across prongs 2 and 7.

JULY, 1937

—Electrolytic Condenser
Internal Connections

©John F. Rider, Publisher

MODELS 62-302, 62-312
62-442, 62-452
Coils, Trimmers, Alignment

MONTGOMERY-WARD & CO.

MODELS 62-304, 62-404
Socket, Trimmers, Voltage Alignment

ALIGNMENT PROCEDURE

Volume Control—Maximum All Adjustments.

Connect Radio Chassis to Ground Post of Signal Generator With a Short Heavy Lead.

Allow Chassis and Signal Generator to "Heat Up" for Several Minutes.

The following equipment is required for aligning:
An All Wave Signal Generator which will provide an accurately calibrated signal at the test frequencies as listed.
Output Indicating Meter; Non-Metallic Screwdriver.
Dummy Antennas — .1 mf., 200 mmf., and 400 ohms.

STEP (Follow Order as Given)	BAND SWITCH SETTING	DUMMY ANTENNA	SIGNAL GENERATOR FREQUENCY SETTING	SIGNAL GENERATOR CONNECTION AT RADIO	TRIMMERS ADJUSTED See Illustration	PROCEDURE INITIAL STEPS	PROCEDURE ADJUSTMENT
I.F.	Range B	.1 mf.	456 KC	Grid of 1st Det.	1st I.F. (C14) & (C15) 2nd I.F. (C18) & (C19) 3rd I.F. (C23)	Turn Rotor to Full Open	Adjust to Maximum Output
RANGE B							
1730 KC	Range B	200 mmf.	1730 KC	Antenna Lead	Oscillator Range B (C8)	Turn Rotor to Full Open	Adjust to Maximum Output
1500 KC	Range B	200 mmf.	1500 KC	Antenna Lead	1st Ant. Range B (C4) 2nd Ant. Range B (C12)	Turn Rotor to Max. Output Set Indicator to 1500 KC— See Note A	Adjust to Maximum Output
600 KC	Range B	200 mmf.	600 KC	Antenna Lead	600 KC (C6)	Turn Rotor to Max. Output	Adjust to Maximum Output Rock Rotor — See Note B
RANGE D							
18300 KC	Range D	400 Ohm	18300 KC	Antenna Lead	Oscillator Range D (C7)	Turn Rotor to Full Open	Adjust to Maximum Output
15000 KC	Range D	400 Ohm	15000 KC	Antenna Lead	Ant. Range D (C3)	Turn Rotor to Max. Output	Adjust to Maximum Output Rock Rotor — See Note B
6000 KC	Range D	400 Ohm	6000 KC	Antenna Lead	6000 KC (C5)	Turn Rotor to Max. Output	Adjust to Maximum Output Rock Rotor — See Note B

Attenuate the signal from the signal generator to prevent the leveling-off action of the AVC.

After each range is completed, repeat the procedure as a final check.

After alignment of Range D has been completed, do not make any adjustments of the Range B trimmers. If this is done, it will be necessary to realign Range D.

NOTE A—In sets using the finger tip tuning dial, remove the retaining ring which holds the dial scale in position. Readjust rotor to maximum output. Hold the station selector ring and turn the dial scale until the pointer is at the 1500 KC mark. Replace the retaining ring.

MODEL 62-302 62-442
" 62-312 62-452

NOTE B—Turn the rotor back and forth and adjust the trimmer until the peak of greatest intensity is obtained.

CAUTION—When aligning the short wave band be sure NOT to adjust at the image frequency. This can be checked as follows: Let us say the signal generator is set for 15,000 KC. The signal will then be heard at 15,000 on the dial of the radio. The image signal, which is much weaker, will be heard at 15,000 less 912 KC, or 14,088 KC on the dial. It may be necessary to increase the input signal to hear the image.

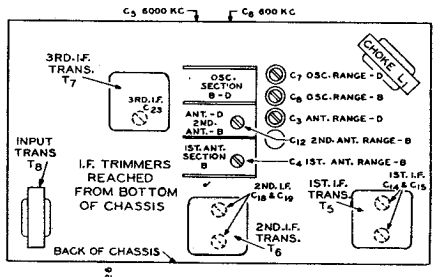

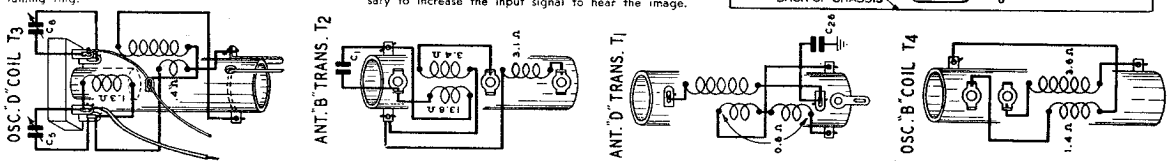

Fig. 7—Coil Terminal Arrangement and D.C. Resistance of Windings

Model 62-304
" 62-404

ALIGNMENT PROCEDURE

Volume Control—Maximum All Adjustments.

Connect Radio Chassis to Ground Post of Signal Generator with a Short Heavy Lead.

Allow Chassis and Signal Generator to "Heat Up" for Several Minutes.

The following equipment is required for aligning:
Signal Generator which will provide an accurately calibrated signal at the test frequencies as listed.
Output Indicating Meter; Non-Metallic Screwdriver.
Dummy Antennas — .1 mf. and 200 mmf.

STEP (Follow Order as Given)	DUMMY ANTENNA	SIGNAL GENERATOR FREQUENCY SETTING	SIGNAL GENERATOR CONNECTION AT RADIO	TRIMMERS ADJUSTED See Illustration	PROCEDURE INITIAL STEPS	PROCEDURE ADJUSTMENT
I. F.	.1 mf.	456 KC	Grid of 1st Det.	2nd I. F. (C9) & (C10) 1st I. F. (C6) & (C 7)	Turn rotor to full open	Adjust to Maximum Output
1730 KC Adj.	200 mmf.	1730 KC	Antenna Lead	Osc. (C4)	Turn rotor to full open	Adjust to Maximum Output
1500 KC Adj.	200 mmf.	1500 KC	Antenna Lead	Ant. (C3)	Turn Rotor to Max. Output	Adjust to Maximum Output

Attenuate the signal from the signal generator to prevent the leveling-off action of the AVC.

NOTE—To obtain dial scale calibration, tune in an 800 KC signal. The pointer should be at the 800 KC mark on the dial. If it is not, note the position of the pointer and remove the chassis from the cabinet. Loosen the pointer screw and set the pointer so that it will be at the 800 KC mark. Tighten the pointer screw and replace the chassis in the cabinet. If the pointer is not at the 800 KC mark another adjustment will be necessary.

VOLTAGES AT SOCKETS
Volume Control: Maximum Antenna Shorted to Ground
"A" Battery — 2 Volts

Tube	Function	Across Filament	Plate to Ground	Screen to Ground	Control Grid
1D7G	1st Det.-Osc.	2.0	87 87(1)	64	3.5(2)
1D5G	I.F.	2.0	87	64	3.5(2)
1H6G	2nd Det.-1st Audio	2.0	32(3)		1.25(4)
1F5G	Power	2.0	82	87	3.5(2)

(1) Anode Grid (G2) to ground
(2) As read across R6 and R7
(3) As read on 100 volt scale (1000 ohm per volt meter). Subject to variation.
(4) As read across R7

Tube Arrangement

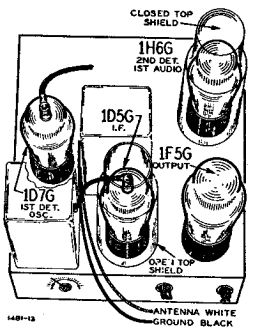

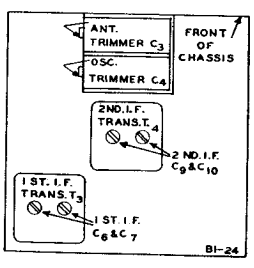

Fig. 3—Trimmer Location

©John F. Rider, Publisher

MONTGOMERY-WARD & CO.

MODELS 62-304,62-404
Schematic,Coils,Batt.Data
Drive Cord Data

Input Voltages and Currents
"A" Battery ..... 2 Volts—.3 Amperes
"B" Battery ..... 90 Volts—11.5 to 15 Ma.
Power Output - - - 135 Milliwatts Undistorted
Selectivity - - 40 KC Broad at 1000 Times Signal

Intermediate Frequency - - - - - - - 456 KC.
Speaker - - - - - - - - - - - 5" Magnetic
Tuning Frequency Range - - - 528 to 1730 KC.
Sensitivity - - - - - - - - - - 40 Microvolts

Replacing Drive Cord

Remove the dial pointer disc by unscrewing the center screw.

Remove old drive cord and tension spring.

Turn the gang condenser rotor to the full open position.

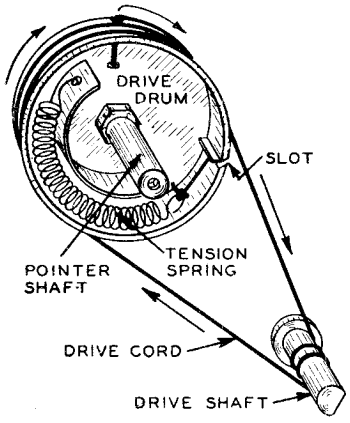

—Drive Cord Replacement

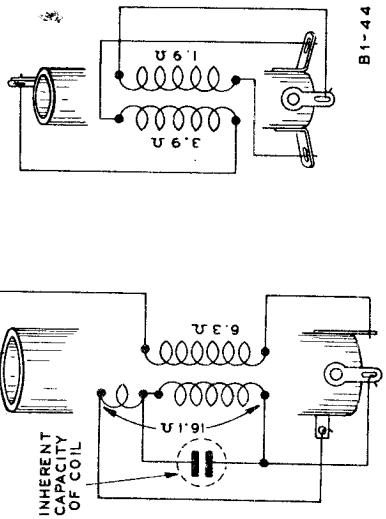

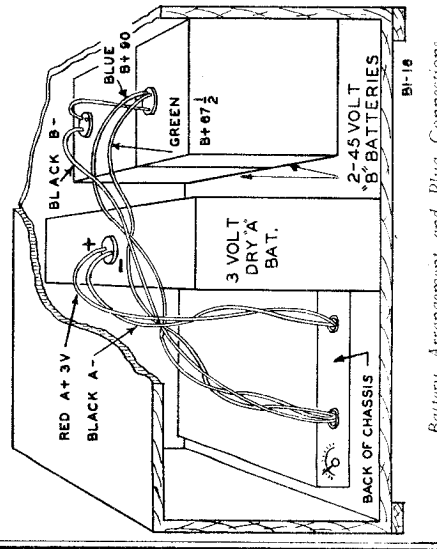

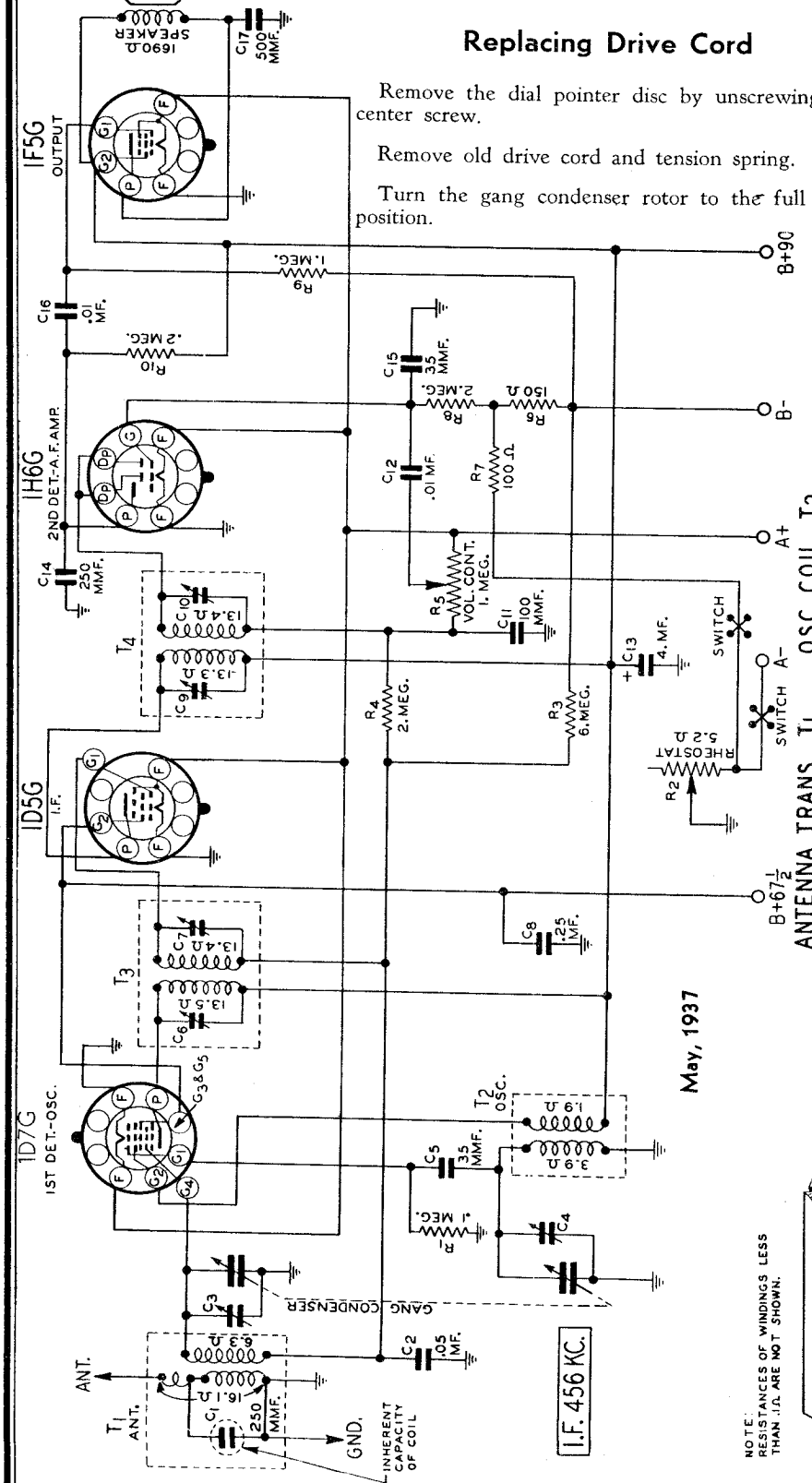

May, 1937

©John F. Rider, Publisher

MODELS 62-305, 62-385, 62-405
62-414, 62-495
Schematic, Socket, Trimmers
Parts

MONTGOMERY-WARD & CO.

MODEL 305

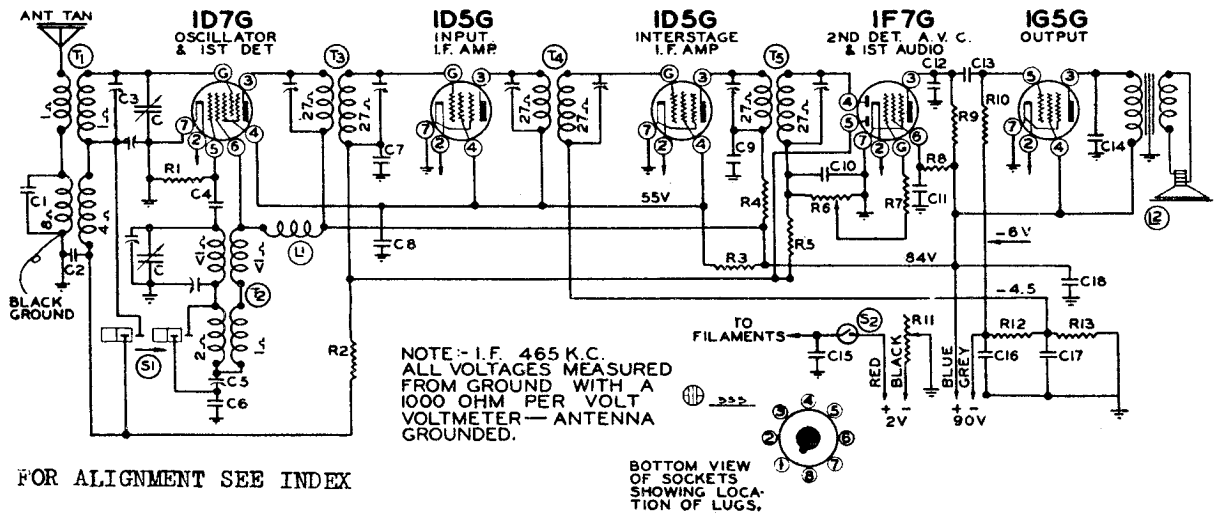

FOR ALIGNMENT SEE INDEX

No.	Part No.	Description
		CONDENSERS
C	102-43	One Section of Gang Condenser
C1	129-12	.00025 Mica 20%
C2	100-22	.05 x 200 v. 25%
C3	124-39	Adjustable trimmer 2-20 mmf.
C4	129-5	.0001 Mica 20%
C5	124-38	Series Pad — 600 mmf.
C6	129-74	.0015 Mica 2½%
C7	100-26	.02 x 400 v 25%
C8	100-20	.1 x 200 v. 25%
C9	100-20	.1 x 200 v. 25%
C10	129-60	.00015 Mica 20%
C11	100-9	.05 x 200 v. 25%
C12	129-2	.0005 Mica 20%
C13	100-11	.01 x 400 v. 25%
C14	100-12	.003 x 600 v. 25%
C15	100-6	.25 x 200 v. 20%
C16	119-22	10 mfd. x 25 w. v.
C17	100-20	.1 x 200 v. 25%
C18	100-64	.25 x 200 v. 20%
		RESISTORS
R1	130-12	50M ohm - 1/3 w. 20%
R2	130-20	100M ohm - 1/3 w. 20%
R3	130-167	7500 ohm - 1/3 w. 20%
R4	130-85	3000 ohm - 1/3 w. 20%
R5	130-4	3 megohm - 1/3 w. 20%
R6	101-78	250M ohm volume control
R7	130-12	50M ohm - 1/3 w. 20%
R8	130-19	1 megohm - 1/3 w. 20%
R9	130-11	250M ohm - 1/3 w. 20%
R10	130-19	1 megohm - 1/3 w. 20%
R11	101-79	4.75 ohm Rheostat
R12	106-39	150 ohm
R13	106-39	300 ohm
		R12 and R13 in same unit
		PARTS
T1	111-75	Antenna Coil complete
T2	110-60	Oscillator Coil Complete
T3	108-77B	Input I. F. Complete
T4	108-78B	Interstage I. F. Complete
T5	108-79B	Output I. F. Complete
L1	123-3	R. F. "B" Choke
L2	114-76	Speaker 6" P. M.
S1	125-30	Band switch
S2		Switch on volume control

LIST OF REPAIR PARTS (Serial No. 575000 and up)

Use Only Genuine Factory Replacement Parts

Part No.	Schematic Reference	Description	No. Used in Set	Selling Price Ea.
		CONDENSERS		
BE100-6	C15	.25 x 200 Volt Tubular	1	.16
BE100-9	C11	.05 x 200 Volt Tubular	1	.10
BE100-11	C13	.01 x 400 Volt Tubular	1	.09
BE100-12	C14	.003 x 600 Volt Tubular	1	.11
BE100-20	C8, C9, C17,	.1 x 200 Volt Tubular	3	.11
BE100-22	C2	.05 x 200 Volt Tubular	1	.10
BE100-26	C7	.02 x 400 Volt Tubular	1	.10
BE100-64	C18	.25 x 200 Volt Tubular	1	.16
BE119-22	C16	10 mfd. x 25 w. Volt Electrolytic	1	.40
BE129-2	C12	.0005 Mica—Type MT—20%	1	.09
BE129-5	C4	.0001 Mica—Type MT—20%	1	.09
BE129-12	C1	.00025 Mica—Type MT—20%	1	.10
BE129-60	C10	.00015 Mica—Type MT—20%	1	.10
BE129-74	C6	.0015 Mica—Type MW—2½%	1	.20
		RESISTORS		
BE106-39	R12, R13	150 Ohm, 300 Ohm Metal Clad Resistor	1	.20
BE130-4	R5	3 Meg Ohm—1/3 Watt—20%—Carbon	1	.08
BE130-11	R9	250M Ohm—1/3 Watt—20% Carbon	1	.08
BE130-12	R1, R7	50M Ohm—1/3 Watt—20%—Carbon	2	.08
BE130-19	R8, R10	1 Meg Ohm—1/3 Watt—20%—Carbon	2	.08
BE130-20	R2	100M Ohm—1/3 Watt—20%—Carbon	1	.08
BE130-85	R4	3M Ohm—1/3 Watt—20%—Carbon	1	.08
BE130-167	R3	7500 Ohm—1/3 Watt—20%—Carbon	1	.08
		COILS		
BE108-77B	T3	Input I. F. Coil Assembly complete with can	1	.60
BE108-78B	T4	Interstage I. F. Coil Assembly complete with can	1	.60
BE108-79B	T5	Output I. F. Coil Assembly complete with can	1	.60
BE110-60	T2	Oscillator Coil Assembly complete	1	.50
BE111-75	T1	Antenna Coil Assembly complete with can	1	.70
		SOCKETS		
BE121-58		Eight Prong Octal Socket—Marked "1D7"	1	.10
BE121-59		Seven Prong Octal Socket—Marked "1D5"	2	.10
BE121-60		Eight Prong Octal Socket—Marked "1F7"	1	.10
BE121-61		Eight Prong Octal Socket—Marked "1G5"	1	.10
		SPEAKER		
BE114-76	L2	Six Inch P. M. Dynamic Speaker	1	3.00

Part No.	Schematic Reference	Description	No. Used in Set	Selling Price Ea.
		MISCELLANEOUS		
BE101-78	R6, S2	Volume Control and Switch (250M Ohm)	1	.60
BE101-79	R11	Filament Rheostat complete (4.75 Ohm)	1	.30
BE102-43	C	Two Gang Variable Condenser	1	1.50
BE115-22		Tube Shield	2	.10
BE123-3	L1	R. F. Choke Coil	1	.20
BE124-38	C5	Series Padder Condenser (600 mmf)	1	.20
BE124-39	C3	Antenna Coil Trimmer Condenser (2-20 mmf)	1	.10
BE125-30	S1	Band Switch	1	.24
BE121-35		"B" Battery Plug	2	.08
BE128-44		"Volume" Knob with Spring	1	.08
BE128-46		"Band Switch" Knob with Spring	1	.08
BE128-47		"Tuning" Knob with Spring	1	.08
BE131-95		Battery Lug Marked A—	1	.02
BE131-96		Battery Lug Marked A+	1	.02

DIAL PARTS LIST

BE112-274		Dial Bracket and Tuning Shaft Assembly including	1	.25

1—No. 117-122 Dial Scale Bracket
1—No. 117-123 Bracket Brace
1—No. 117-125 Tuning Shaft Bushing
1—No. 112-263 Tuning Shaft
1—No. 117-116 Drive Pulley

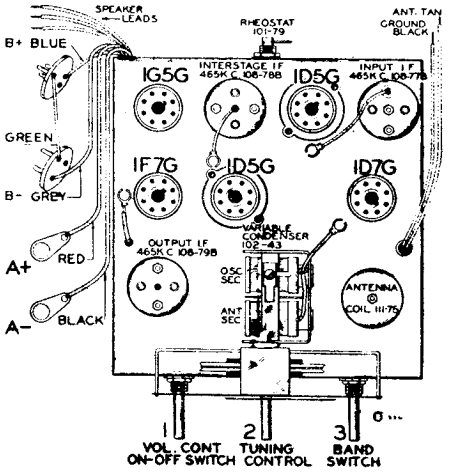

FREQUENCY RANGE

535 to 1720 K.C. (Kilocycles)

2000 to 7000 K.C. (Kilocycles)

©John F. Rider, Publisher

MONTGOMERY WARD & CO.

MODELS 62-307, 62-407
Schematic, Voltage, Parts

BAND	DIAL SCALE	FREQUENCY RANGE
Broadcast	Outer Scale —Blue	535 to 1720 K.C. (Kilocycles)
Middle Wave	Center Scale—Green	1695 to 5500 K.C. (Kilocycles)
Short Wave	Inner Scale —Buff	5.2 to 18.3 M.C. (Megacycles)

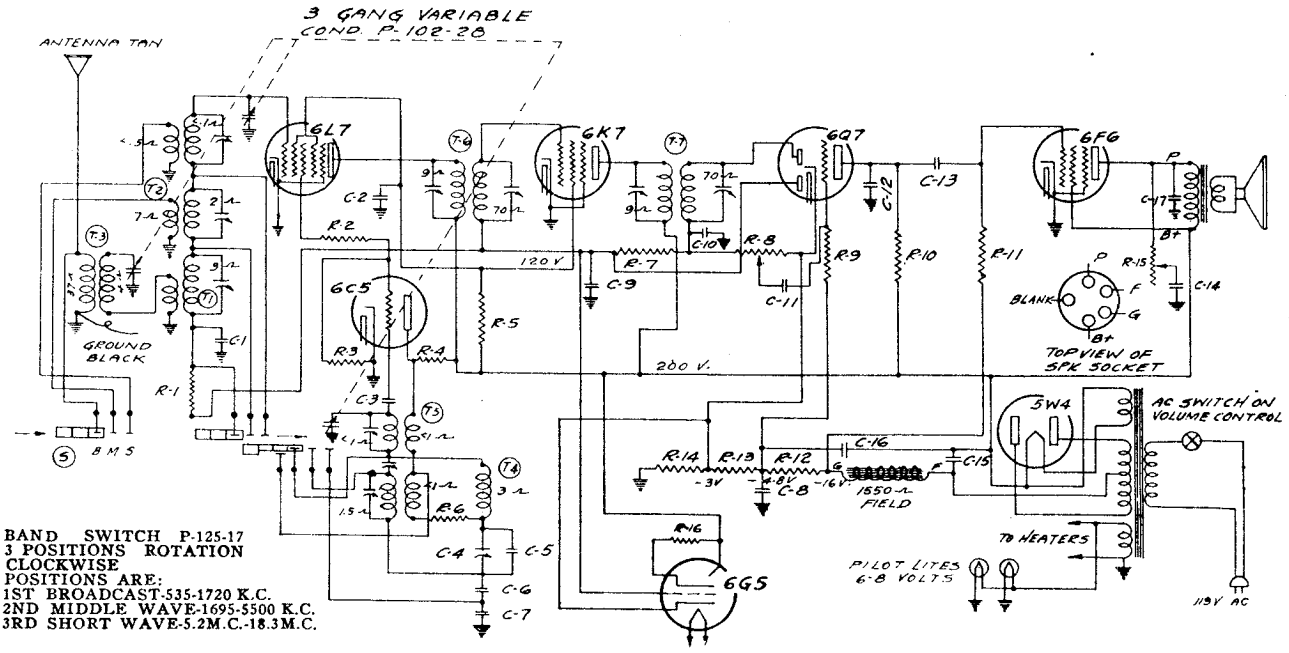

Power Transformer 50-60 Cycle P-104-52 25 Cycle P 104-53
Universal 25 Cycle P-104-54
Universal 40 Cycle P-104-55

LIST OF REPAIR PARTS (Serial No. 6E249976 and up)

Use Only Genuine Factory Replacement Parts

Part No.	Schematic Reference	Description	No. Used In Set	Selling Price Ea.
		CONDENSERS		
BE 100-11	C-11; C-13	.01 x 400 Volt Tubular	2	$0.09
BE 100-20	C-2; C-8	.1 x 200 Volt Tubular	2	.11
BE 100-22	C-1; C-9	.05 x 200 Volt Tubular	2	.10
BE 100-25	C-17	.002 x 600 Volt Tubular	1	.09
BE 100-27	C-14	.025 x 600 Volt Tubular	1	.10
BE 103-6	C-15	8 Mfd. x 350 Volt Electrolytic	1	.50
BE 103-7	C-16	8 Mfd. x 300 Volt Electrolytic	1	.44
BE 129-2	C-12	.0005 Mica—Type MT—20%	1	.09
BE 129-12	C-10	.00025 Mica—Type MT—20%	1	.12
BE 129-39	C-3	.00005 Mica—Type MT—20%	1	.12
BE 129-54	C-7	.003 Mica—Type MW—2½%	1	.25
BE 129-55	C-6	.0034 Mica—Type MW—2½%	1	.25
BE 129-56	C-5	.00055 Mica—Type MT—10%	1	.10
		RESISTORS		
BE 106-26	R-12; R-13; R-14	(R-12, 220 Ohm) (R-13, 32 Ohm) (R-14, 52 Ohm) Metal Clad Resistor	1	.24
BE 130-4	R-9	3 Meg Ohm—½ Watt—20%—100 Volt Carbon	1	.08
BE 130-12	R-3	50M Ohm—½ Watt—20%— 20 Volt Carbon	1	.08
BE 130-19	R-7	1 Meg Ohm—½ Watt—20%—100 Volt Carbon	1	.08
BE 130-20	R-1	100M Ohm—½ Watt—20%— 50 Volt Carbon	1	.08
BE 130-27	R-6	50 Ohm—½ Watt—20%— 3 Volt Carbon	1	.10
BE 130-102	R-11	500M Ohm—½ Watt—10%— 50 Volt Carbon	1	.10
BE 130-103	R-10	100M Ohm—½ Watt—10%— 50 Volt Carbon	1	.10
BE 130-104	R-4; R-5	9M Ohm— 1 Watt—20%—100 Volt Carbon	2	.10
BE 130-105	R-2	150 Ohm—½ Watt—20%— 10 Volt Carbon	1	.10
BE 130-110	R-16	1 Meg Ohm—1/10 Watt—10%—100 Volt Carbon	1	.08
		COILS		
BE 108-73	T-7	Output I.F. Coil Assem. Comp. with Can.	1	.90
BE 108-74	T-6	Input I.F. Coil Assem. Comp. with Can.	1	.90
BE 108-88	T-4	Broadcast Oscillator Coil Assem. Comp. with Can.	1	.85
BE 110-39	T-5	Mid Wave and Short Wave Oscillator Assem. less Can.	1	.75
BE 111-49	T-1	Broadcast Antenna Coil Assem. Comp. with Can.	1	.40
BE 111-50	T-2	Mid Wave and Short Wave Antenna Coil Assem. less Can.	1	.80
BE 111-51	T-3	Broadcast Preselector Coil Assembly	1	.35
		SOCKETS		
BE 121-8		Five Prong Socket—Marked "SPKR"	1	.08
BE 121-12		Seven Prong Socket—Marked "6K7"	1	.10
BE 121-14		Seven Prong Socket—Marked "6F6"	1	.10
BE 121-15		Five Prong Socket—Marked "5W4"	1	.08
BE 121-17		Six Prong Socket—Marked "6C5"	1	.09
BE 121-18		Seven Prong Socket—Marked "6L7"	1	.10
BE 121-26		Seven Prong Socket—Marked "6Q7"	1	.10
		SPEAKER		
BE 114-45		Eight Inch Dynamic		3.60
		TRANSFORMERS		
BE 104-52		Power Transformer, 50/60 Cycle	1	2.00
BE 104-53		Power Transformer, 25 Cycle	1	2.50
BE 104-54		Universal Power Transformer, 25 Cycle Primary	1	2.50
BE 104-55		Universal Power Transformer, 40 Cycle Primary	1	3.00
		MISCELLANEOUS		
BE 101-46	R-8	Volume Control and Switch (1 Meg Ohm)	1	$0.60
BE 101-53	R-15	Tone Control 50M Ohm	1	.30

Part No.	Schematic Reference	Description	No. Used In Set	Selling Price Ea.
BE 102-28		Three Gang Variable Condenser	1	2.50
BE 107-5		Line Cord and Plug	1	.30
BE 115-35		Antenna, Oscillator, Shield	2	.12
BE 124-28	C-4	J-S Series Pad 3 Pl. (80-225)	1	.16
BE 125-17	S	Band Switch	1	.35
128-44		"Volume" Knob with Spring	1	.08
128-46		"Band Switch" Knob with Spring	1	.08
128-47		"Tuning" Knob with Spring	1	.08

CATHODE RAY TUNING INDICATOR PARTS

BE 107-35		Cable and Socket Assembly	1	$0.40
BE 112-158		Metal Oval Escutcheon	1	.15
BE 117-57		Holder and Clamp	1	.15
BE 130-110		1 Meg Ohm—1/10 Watt—10%—100 Volt Carbon	1	.08

DIAL PARTS LIST

ASSEMBLIES

BE 117-41		Drive Bracket including: 1—No. 117-19—Tuning Shaft Bushing	1	$0.06
BE 117-66		Switch Disc and Link Assembly, including: 1—No. 117-12 —Switch Arm 1—No. 117-35 —Bushing with Screws 1—No. 117-40B—Switch Link 3—No. 131-26 —Spring Washers 3—No. 162-5 —Rivets 1—No. 112-144—Switch Disc—Inc. Red Tape	1	.12

DIAL PARTS ONLY

BE 112-125		Drive Belt	1	.10
BE 112-143		Oval Escutcheon complete with Celluloid Crystal	1	.50
BE 112-148A		Dial Scale complete with Fastener, Pointer Disc, and Screw	1	.24
BE 112-147		Tuning Shaft	1	.06
BE 112-151		Pointer complete with Screw	1	.02
BE 112-156		Pilot Light Assembly	2	.06
BE 116-13		6.3 Volt T-51 Pilot Light	2	.08
BE 117-20A		Tuning Shaft Pulley	1	.03
BE 117-38		Stud, for take-up Spring	1	.03
BE 117-39		Pulley, for take-up Spring	1	.02
BE 120-14		Take-up Spring	1	.02
BE 134-9		Horse Shoe Washer	1	.01
BE 134-40		Rubber Grommet	2	.02

Note: Speakers cannot be ordered, defective speakers must be repaired.
All resistors and mica condensers are RMA color coded — specify value and/or resistor or condenser (per schematic diagram) and model number.
Mica condensers are coded with an additional dot indicating tolerance:

Tolerance Percent	Color of Dot
2½%	White
5%	Green
10%	Blue
15%	Yellow
20%	Red
More than—20%	None

When ordering parts, always specify part and model number as well as serial number of chassis.
When ordering condensers, specify part number, tolerance and/or schematic reference number.

©John F. Rider, Publisher

©John F. Rider, Publisher

TUBES:

The tube complement of this chassis consists of the latest metal type tubes.

The type and function of each tube is as follows:

1—Type 6L7 Pentagrid Mixer, First Detector.
1—Type 6C5 Oscillator.
1—Type 6K7 Remote Cut-Off Pentode, I. F. Amplifier (465 K.C.)
1—Type 6Q7 Duplex Diode Triode Second Detector, A.V.C. and First Audio.
1—Type 6F6 Pentode Output Amplifier.
1—Type 5W4 High Vacuum Rectifier.
1—Type 6G5 Cathode-Ray Tuning Eye.
(Note:—6G5 available in all glass only.)

Transformers are available and chassis are sometimes equipped with universal transformers for operation on 40 and 60 cycles and with primary taps for 108, 125, 150, 220 and 250 volts (see parts list) and also sometimes equipped with 25 cycle transformers with 105-115 volt or 220 volt primaries, not universals.

SERVICE NOTES:

Voltages taken from different points of circuit to chassis are measured with volume control full on, all tubes in their sockets and speaker connected, with a volt meter having a resistance of 1000 ohms per volt.

All voltages as indicated on diagram are measured with 119 volts on the primary of the power transformer.

Resistances of coil windings are indicated in ohms on the schematic circuit diagram.

To check for open by-pass condensers, shunt each condenser with another condenser of the same capacity and voltage rating, which is known to be good, until the defective unit is located.

Excessive hum, stuttering, low volume and a reduction in all D.C. voltages is usually caused by a shorted electrolytic condenser; open by-pass condensers frequently cause oscillation and distorted tone.

ALIGNING INSTRUCTIONS:

CAUTION:—No aligning adjustments should be attempted without first thoroughly checking over all other possible causes of trouble, such as poor installations, open or grounded antenna systems, low line voltages, defective tubes, condensers and resistors. In order to properly align this chassis, an oscillator (generator) is absolutely necessary.

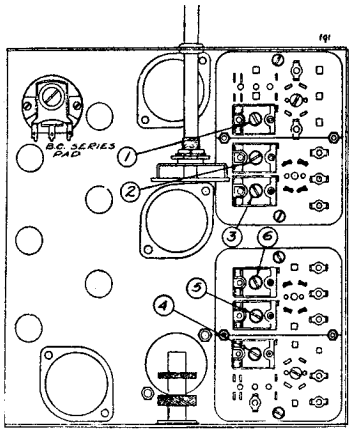

191
FIG. 3—BOTTOM VIEW SHOWING TRIMMERS

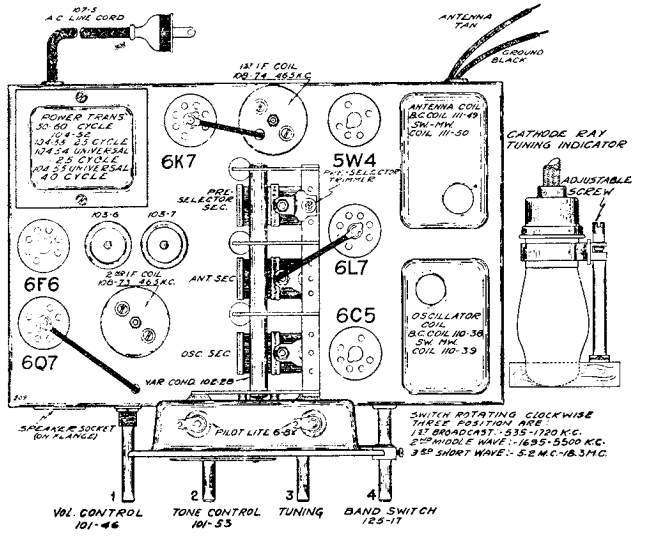

—TOP VIEW

No aligning adjustments should be attempted with the chassis in the cabinet. Remove the knobs and the four bolts which are used to fasten the chassis.

All adjustments should be made with a non-metallic screw driver.

RESONANCE INDICATOR:

Use as a resonance indicator an output meter connected across the primary of the speaker input transformer, or by means of an adapter between the plate and screen terminals of the type 6F6 output tube. Maximum deflection of the meter indicates resonance. Use only enough signal to get a readily readable output. A low range output meter or the low scale of a multi-range meter should be used.

DUMMY ANTENNAS:

The following dummy antennas are used in aligning and are referred to in the following alignment instructions as "Dummy 1," "Dummy 2," and "Dummy 3."

Dummy 1: (I.F.)—Consists of a .1 mfd. condenser connected in series with the external oscillator.

Dummy 2: (Broadcast—Consists of a 200 mmfd. condenser and a 20 ohm resistor connected in series with each other and in series with the external oscillator.

Dummy 3: (Middle and Short Wave)—Consists of a .1 mfd. condenser and a 400 ohm resistor connected in series with each other and in series with the external oscillator.

ALIGNING I.F. TRANSFORMERS: (465 K.C.):

Part No. 108-73 Output I.F. Transformer
Part No. 108-74 Input I.F. Transformer

These I.F. transformers have two adjustments, both of which are accessible from the top of chassis (see top view).

1. With volume control full on (the extreme right of its rotation), the band changing switch in the broadcast position, (extreme left of its rotation), and with the variable condenser set to approximately 1400 kilocycles, make the following adjustments:

   (a) Connect external oscillator set at 465 kilocycles, in series with "Dummy 1," to the control grid cap of the type 6K7 tube, and adjust the output I.F. transformer (No. 108-73) to resonance.

   (b) With "Dummy 1" still connected, move oscillator output clip from grid of 6K7 to grid cap to 6L7 and adjust input I.F. transformer (No. 108-74) to resonance.

   (c) With oscillator still connected to 6L7, readjust output I.F. transformer (108-73) if necessary.

BROADCAST BAND ALIGNMENT:

535 to 1720 Kilocycles

1. With band changing switch in the broadcast position, extreme left of its rotation, and with gang condenser in its minimum capacity position, plates entirely out of mesh, and with external oscillator connected in series with "Dummy 2" to tan antenna lead and black ground lead, make following adjustments:

   (a) Set external oscillator to 1720 K.C. and adjust broadcast oscillator trimmer to resonance (Adjustment number 1; see bottom view of coil assembly, Fig. 3).

   (b) Re-set external oscillator to 1550 K.C., rotate variable gang condenser and pick up signal. Adjust broadcast antenna trimmer (Adjustment number 4) to resonance; also adjust preselector trimmer which is mounted on the top of the rear section of the three gang variable tuning condenser to resonance. (See top view of chassis; Fig. 1, for location of this adjustment).

   (c) Re-set external oscillator to 600 K.C., and adjust broadcast series pad to resonance by rotating condenser to approximately 600 K.C., rocking it slowly to and fro until by adjusting series pad maximum output is attained. This adjustment is located on the bottom of the chassis directly under the variable gang condenser. (See bottom view of chassis, Fig. 3).

   (d) Repeat adjustments "a" and "b" until sensitivity is at its maximum.

   (e) Check for tracking and sensitivity at 1000 kilocycles. **Under no circumstances bend plates of variable condenser sections to correct tracking.**

SHORT WAVE BAND ALIGNMENT:

5.2 to 18.3 Megacycles

1. With band changing switch in the short wave position, extreme right of its rotation, and with external oscillator set at 17 megacycles and connected in series with "Dummy 3" to the tan antenna and black ground lead, make the following adjustments:

   (a) Move dial pointer to 17 megacycles and adjust short wave oscillator (Adjustment number 3) and short wave antenna (Adjustment number 6) to resonance.

   (b) Re-set external oscillator to 6 megacycles and pick up signal by rotating variable condenser and check sensitivity.

   (c) Re-set external oscillator and check set at 18.1 megacycles and 5.3 megacycles for band coverage.

NOTE: It is extremely necessary in making all of these adjustments that the fundamental oscillator signal be tuned in and not the image frequency which will fall below the fundamental on the receiver dial. As an example of this a fundamental 18.3 megacycle can be tuned in not only at 18.3 on the dial, but also at approximately 17.4 megacycles.

MIDDLE WAVE BAND ALIGNMENT:

1695 to 5500 Kilocycles

1. With band changing switch in the middle wave position, center of its rotation, and with external oscillator set at 5000 kilocycles and connected in series with "Dummy 3" to the tan antenna and black ground lead, make the following adjustments:

   (a) Move dial pointer to 5000 kilocycles and adjust middle wave oscillator (adjustment number 2) and middle wave antenna (adjustment number 5) to resonance.

   (b) Re-set external oscillator to 1800 kilocycles and pick up signal by rotating variable condenser and check sensitivity.

   (c) Re-set external oscillator and check set at 5400 kilocycles and 1700 kilocycles for band coverage.

MONTGOMERY WARD & CO.

MODELS 62-315,62-415
Schematic,Voltage
Socket,Trimmers,Parts

BAND	DIAL SCALE	FREQUENCY RANGE
Broadcast	Upper Scale—Blue	535 to 1720 K.C. (Kilocycles)
Short Wave	Lower Scale—Buff	2280 to 6600 K.C. (Kilocycles)

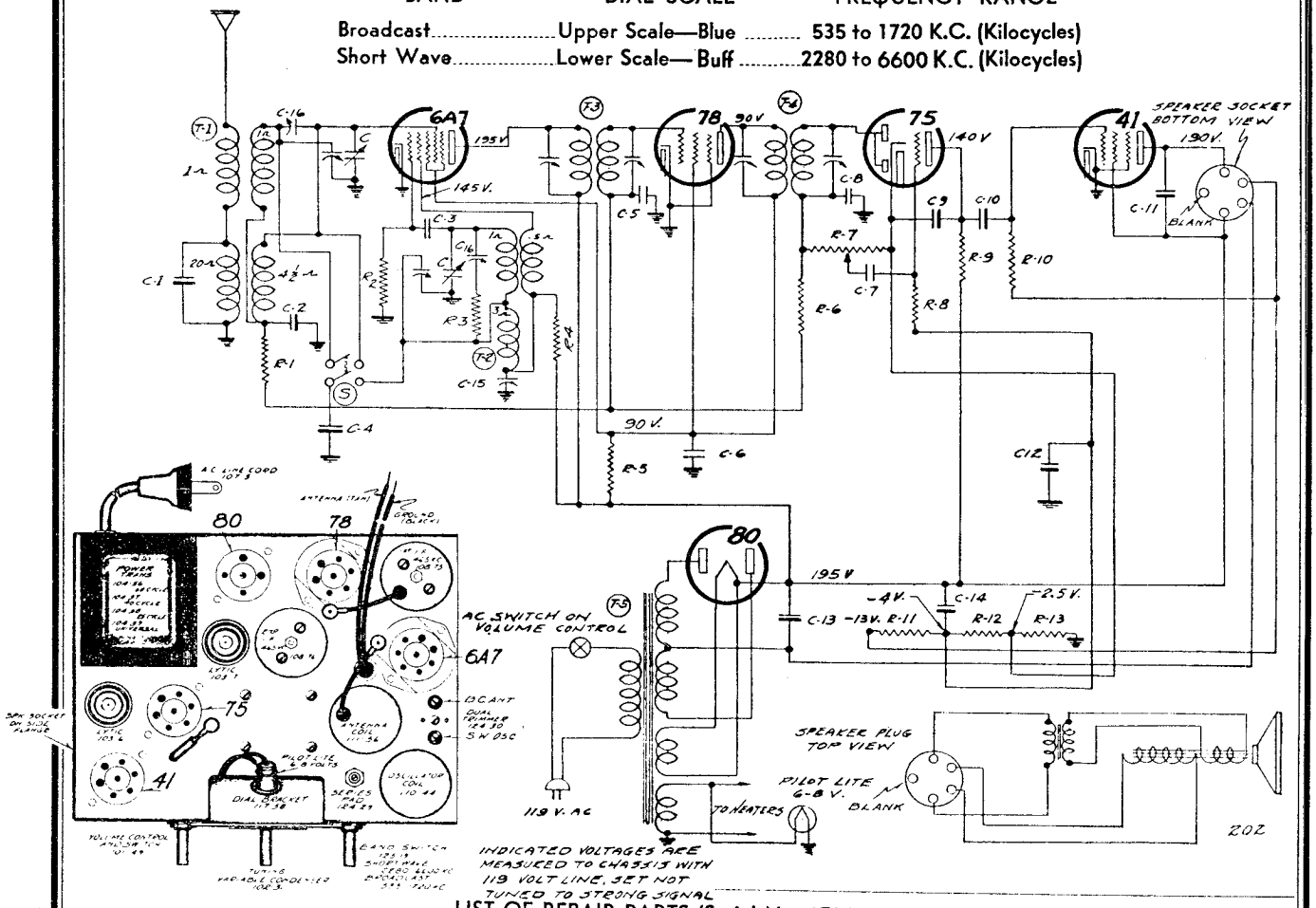

LIST OF REPAIR PARTS (Serial No. 6E248475 and up)

Use Only Genuine Factory Replacement Parts

IF PEAK 465KC

Part No.	Schematic Reference	Description	No. Used In Set	Selling Price Ea.
		CONDENSERS		
BE 100-6	C-12; C-6	.25 x 200 Volt Tubular—Without Bracket	2	$0.15
BE 100-9	C-5	.05 x 200 Volt Tubular	1	.10
BE 100-11	C-10; C-7	.01 x 400 Volt Tubular	2	.09
BE 100-19	C-11	.006 x 600 Volt Tubular	1	.09
BE 100-26	C-2	.02 x 400 Volt	1	.10
BE 103-6	C-13	8 Mfd. x 350 Volt Electrolytic	1	.50
BE 103-7	C-14	8 Mfd. x 300 Volt Electrolytic	1	.44
BE 129-5	C-9	.0001 Mica—Type O—20%	1	.09
BE 129-12	C-8	.00025 Mica—Type O—20%	1	.12
BE 129-61	C-4	.0017 Mica—Type W—2½%	1	.20
BE 129-62	C-3	.00003 Mica—Type O—10%	1	.10
BE 129-63	C-1	.0004 Mica—Type W—10%	1	.10
		RESISTORS		
BE 106-26	R-11; R-12; R-13	220 Ohm (R-11), 33 Ohm (R-12), 52 Ohm (R-13), Metal Clad Resistor		
BE 130-12	R-2	50M Ohm— ⅓ Watt—20%— 20 Volt—Carbon	1	.24
BE 130-20	R-9	100M Ohm— ⅓ Watt—20%— 50 Volt—Carbon	1	.08
BE 130-22	R-4	5M Ohm— ½ Watt—20%— 10 Volt—Carbon	1	.08
BE 130-77	R-5	10M Ohm— 1 Watt—20%—100 Volt—Carbon	1	.08
BE 130-100	R-10	150M Ohm— ½ Watt—20%— 50 Volt—Carbon	1	.08
BE 130-110	R-6	1 Meg Ohm—1/10 Watt—10%—100 Volt—Carbon	1	.08
BE 130-111	R-1	100M Ohm—1/10 Watt—20%— 50 Volt—Carbon	1	.08
BE 130-112	R-3	100 Ohm—1/10 Watt—20%— 10 Volt—Carbon	1	.08
BE 130-113	R-8	2 Meg Ohm—1/10 Watt—20%—100 Volt—Carbon	1	.08
		COILS		
BE 108-75	T-3	465 K.C. Input I.F. Coil Assembly Complete with Can		
BE 108-76	T-4	465 K.C. Output I.F. Coil Assembly Complete with Can	1	.66
BE 110-44	T-2	Oscillator Coil Assembly Complete with Can	1	.75
BE 111-56	T-1	Antenna Coil Assembly Complete with Can	1	.66
			1	.80
		SOCKETS		
BE 121-6		Six Prong Socket—Marked "78"	1	.09
BE 121-6		Six Prong Socket—Marked "75"	1	.09
BE 121-6		Six Prong Socket—Marked "41"	1	.09
BE 121-7		Seven Prong Socket—Marked "6A7"	1	.10
BE 121-8		Five Prong Socket—Marked "SPKR"	1	.08
BE 121-9		Four Prong Socket—Marked "80"	1	.08
		SPEAKER		
BE 114-16		Five Inch Dynamic Speaker	1	$3.00

Part No.	Schematic Reference	Description	No. Used In Set	Selling Price Ea.
		TRANSFORMERS		
BE 104-56	T-5	60 Cycle—110 Volt Power Transformer	1	1.74
BE 104-57		40 Cycle—110 Volt Power Transformer		2.50
BE 104-58		25 Cycle—110 Volt Power Transformer		2.50
BE 104-59		40 Cycle Primary—Universal Power Transformer		3.00

TUBES:

FOR ALIGNMENT SEE INDEX

The tube complement of this chassis consists of the following tubes.

The type and function of each tube is as follows:

1—Type 6A7 Pentagrid Mixer, First Detector-oscillator
1—Type 78 Remote Cut-Off Pentode, I. F. Amplifier (465 K.C.)
1—Type 75 Duplex Diode Triode Second Detector, A.V.C. and First Audio.
1—Type 41 Pentode Output Amplifier.
1—Type 80 High Vacuum Rectifier.

Transformers are available and chassis are sometimes equipped with universal transformers for operation on 40 and 60 cycles and with primary taps for 108, 125, 150, 220 and 250 volts (see parts list) and also sometimes equipped with 25 cycle transformers with 105-115 volt or 220 volt primaries, not universals.

©John F. Rider, Publisher

MODELS 62-316,62-416
Schematic,Voltage,Parts

MONTGOMERY WARD & CO.

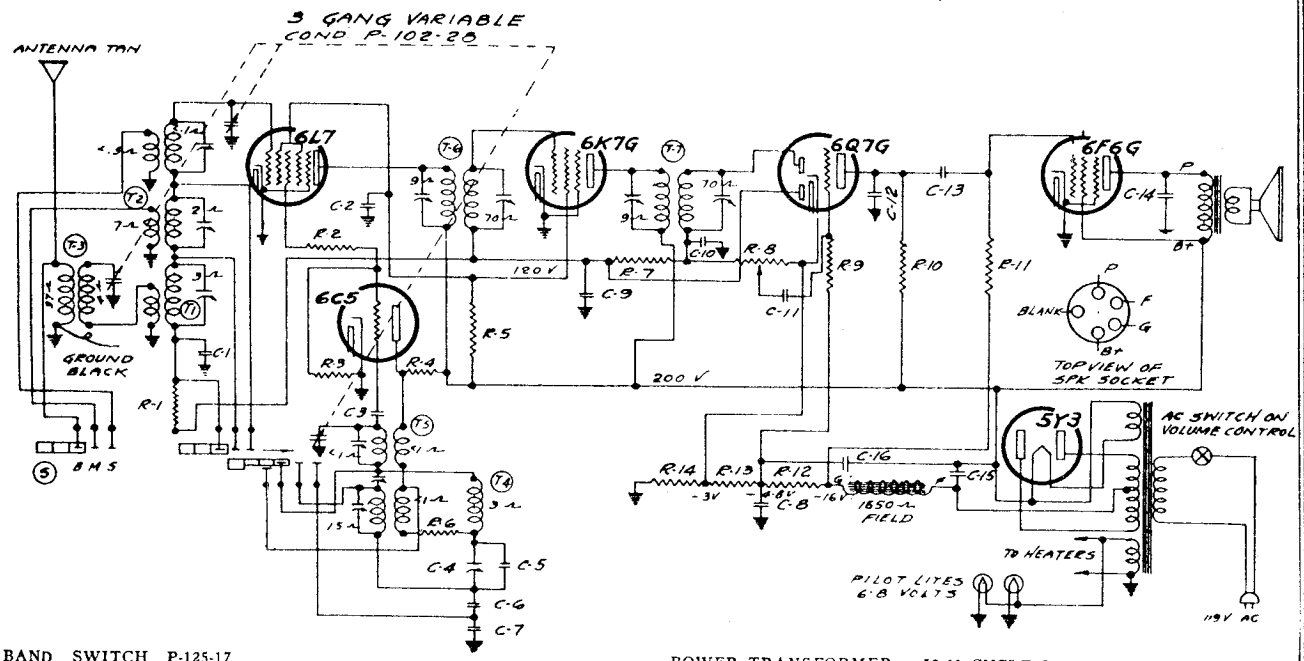

BAND SWITCH P-125-17
3 POSITIONS ROTATION CLOCKWISE
POSITIONS ARE:
1ST BROADCAST-535-1720 K.C.
2ND MIDDLE WAVE-1695-5500 K.C.
3RD SHORT WAVE-5.2M.C.-18.3M.C.

POWER TRANSFORMER 50-60 CYCLE P-104-52 25 CYCLE P-104-53
UNIVERSAL 25 CYCLE P-104-54
UNIVERSAL 40 CYCLE P-104-55

BAND	DIAL SCALE	FREQUENCY RANGE
Broadcast	Outer Scale —Blue	535 to 1720 K.C. (Kilocycles)
Middle Wave	Center Scale—Green	1695 to 5500 K.C. (Kilocycles)
Short Wave	Inner Scale —Buff	5.2 to 18.3 M.C. (Megacycles)

LIST OF REPAIR PARTS (Serial No. 6E249476 and up)

Use Only Genuine Factory Replacement Parts

Part No.	Schematic Reference	Description	No. Used In Set	Selling Price Ea.
		CONDENSERS		
BE 100-11	C-11:C-13	.01 x 400 Volt Tubular	2	$0.09
BE 100-20	C-2: C-8	.1 x 200 Volt Tubular	2	.11
BE 100-22	C-1: C-9	.05 x 200 Volt Tubular	2	.10
BE 100-19	C-14	.006 x 600 Volt Tubular	1	.10
BE 103-6	C-15	8 Mfd. x 350 Volt Electrolytic	1	.50
BE 103-7	C-16	8 Mfd. x 300 Volt Electrolytic	1	.44
BE 129-2	C-12	.00005 Mica—Type MT—20%	1	.09
BE 129-12	C-10	.00025 Mica—Type MT—20%	1	.12
BE 129-39	C-3	.00005 Mica—Type MT—20%	1	.12
BE 129-54	C-7	.003 Mica—Type MW—2½%	1	.25
BE 129-55	C-6	.0034 Mica—Type MW—2½%	1	.25
BE 129-56	C-5	.00055 Mica—Type MT—10%	1	.10
		RESISTORS		
BE 106-26	R-12: R-13: R-14	(R-12, 220 Ohm) (R-13, 32 Ohm) (R-14, 52 Ohm) Metal Clad Resistor	1	.24
BE 130-4	R-9	3 Meg Ohm—½ Watt—20%—100 Volt Carbon	1	.08
BE 130-12	R-3	50M Ohm—½ Watt—20%— 20 Volt Carbon	1	.08
BE 130-19	R-7	1 Meg Ohm—½ Watt—20%—100 Volt Carbon	1	.08
BE 130-20	R-1	100M Ohm—½ Watt—20%— 50 Volt Carbon	1	.08
BE 130-27	R-6	50 Ohm—½ Watt—20%— 3 Volt Carbon	1	.10
BE 130-102	R-11	500M Ohm—½ Watt—10%— 50 Volt Carbon	1	.10
BE 130-103	R-10	100M Ohm—½ Watt—10%— 50 Volt Carbon	1	.10
BE 130-104	R-4: R-5	9M Ohm— 1 Watt—20%—100 Volt Carbon	2	.10
BE 130-105	R-2	150 Ohm—½ Watt—20%— 10 Volt Carbon	1	.10
		COILS		
BE 108-73	T-7	Output I.F. Coil Assem. Comp. with Can.	1	.90
BE 108-74	T-6	Input I.F. Coil Assem. Comp. with Can.	1	.90
BE 110-38	T-4	Broadcast Oscillator Coil Assem. Comp. with Can.	1	.35
BE 110-39	T-5	Mid Wave and Short Wave Oscillator Assem. less Can.	1	.75
BE 111-49	T-1	Broadcast Antenna Coil Assem. Comp. with Can.	1	.40
BE 111-50	T-2	Mid Wave and Short Wave Antenna Coil Assem. less Can.	1	.80
BE 111-51	T-3	Broadcast Preselector Coil Assembly	1	.35
		SOCKETS		
BE 121-8		Five Prong Socket—Marked "SPKR"	1	.08
BE 121-12		Seven Prong Socket—Marked "6K7"	1	.10
BE 121-14		Seven Prong Socket—Marked "6F6"	1	.10
BE 121-15		Five Prong Socket—Marked "5Y3"	1	.08
BE 121-17		Six Prong Socket—Marked "6C5"	1	.09
BE 121-18		Seven Prong Socket—Marked "6L7"	1	.10
BE 121-26		Seven Prong Socket—Marked "6Q7"	1	.10
		SPEAKER		
BE 114-15		Six Inch Dynamic	1	3.00
		TRANSFORMERS		
BE 104-52		Power Transformer, 50/60 Cycle	1	2.00
BE 104-53		Power Transformer, 25 Cycle	1	2.50
BE 104-54		Universal Power Transformer, 25 Cycle Primary	1	3.00
BE 104-55		Universal Power Transformer, 40 Cycle Primary	1	3.00

Part No.	Schematic Reference	Description	No. Used In Set	Selling Price Ea.
		MISCELLANEOUS		
BE 101-46	R-8	Volume Control and Switch (1 Meg Ohm)	1	$0.60
BE 102-28		Three Gang Variable Condenser	1	2.50
BE 107-5		Line Cord and Plug	1	.30
BE 115-35		Antenna, Oscillator, Shield	2	.12
BE 124-28	C-4	J-S Series Pad 3 Pf.	1	.16
BE 125-17	S	Wave Change Switch	1	.35
128-44		"Volume" Knob with Spring	1	.08
128-46		"Band Switch" Knob with Spring	1	.08
128-47		"Tuning" Knob with Spring	1	.08

DIAL PARTS LIST

		ASSEMBLIES	
BE 117-41		Drive Bracket including: 1—No. 117-19—Tuning Shaft Bushing	1 $0.06
BE 117-66		Switch Disc and Link Assembly, including: 1—No. 117-12 —Switch Arm 1—No. 117-35 —Bushing with Screws 1—No. 117-40B—Switch Link 3—No. 131-26 —Spring Washers 3—No. 162-5 —Rivets 1—No. 112-144—Switch Disc—Inc. Red Tape	1 .12
		DIAL PARTS ONLY	
BE 112-125		Drive Belt	1 .10
BE 112-143		Oval Escutcheon complete with Celluloid Crystal	1 .50
BE 112-148A		Dial Scale complete with Fastener, Pointer Disc, and Screw	1 .24
BE 112-147		Tuning Shaft	1 .06
BE 112-151		Pointer complete with Screw	1 .02
BE 112-156		Pilot Light Assembly	2 .06
BE 116-12		6.8 Volt T-51 Pilot Light	2 .08
BE 117-20A		Tuning Shaft Pulley	1 .03
BE 117-38		Stud, for take-up Spring	1 .03
BE 117-39		Pulley, for take-up Spring	1 .02
BE 120-14		Take-up Spring	1 .02
BE 134-9		Horse Shoe Washer	1 .01
BE 134-46		Rubber Grommet	2 .02

Note: Speakers cannot be ordered, defective speakers must be repaired.
All resistors and mica condensers are RMA color coded — specify value and/or resistor or condenser (per schematic diagram) and model number.
Mica condensers are coded with an additional dot indicating tolerance:

Tolerance Percent	Color of Dot
2½%	White
5%	Green
10%	Blue
15%	Yellow
20%	Red
More than—20%	None

When ordering condensers, specify part number, tolerance and/or schematic reference number.
When ordering parts, always specify part and model number as well as serial number of chassis.

5017 3500 8-36

PRICES SUBJECT TO CHANGE WITHOUT NOTICE

©John F. Rider, Publisher

©John F. Rider, Publisher

MODELS 62-316 and 62-416

POWER SUPPLY:

Caution:—This radio, unless otherwise marked, must be operated from 105-115 volts, 60 cycle A.C. supply only. If you are in doubt as to the voltage and frequency rating of the power supply, consult your local power company before inserting plug. Do not insert plug unless all tubes and speaker plug are in their proper sockets.

Receivers of this model which are to be used on voltages or frequencies other than 105-115 volts, 60 cycles are so marked. The power consumption of this receiver is 55 watts.

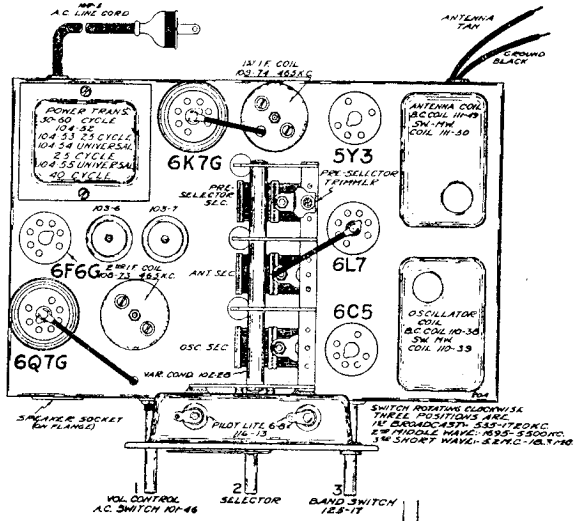

TUBES:

The tube complement of this chassis consists of two metal type tubes, and four glass type tubes with octal base.

The type and function of each tube is as follows:

1—Type 6L7 Pentagrid Mixer, First Detector.
1—Type 6C5 Oscillator.
1—Type 6K7G Remote Cut-Off Pentode, I. F. Amplifier (465 K.C.)
1—Type 6Q7G Duplex Diode Triode Second Detector, A.V.C. and First Audio
1—Type 6F6G Pentode Output Amplifier.
1—Type 5Y3 High Vacuum Rectifier.

Transformers are available and chassis are sometimes equipped with universal transformers for operation on 40 and 60 cycles and with primary taps for 108, 125, 150, 220 and 250 volts (see parts list) and also sometimes equipped with 25 cycle transformers with 105-115 volt or 220 volt primaries, not universals.

SERVICE NOTES:

Voltages taken from different points of circuit to chassis are measured with volume control full on, all tubes in their sockets and speaker connected, with a volt meter having a resistance of 1000 ohms per volt.

All voltages as indicated on diagram are measured with 119 volts on the primary of the power transformer.

Resistances of coil windings are indicated in ohms on the schematic circuit diagram.

To check for open by-pass condensers, shunt each condenser with another condenser of the same capacity and voltage rating, which is known to be good, until the defective unit is located.

Excessive hum, stuttering, low volume and a reduction in all D.C. voltages is usually caused by a shorted electrolytic condenser; open by-pass condensers frequently cause oscillation and distorted tone.

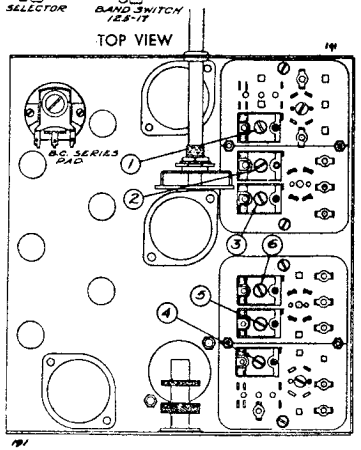

FIG. 3—BOTTOM VIEW SHOWING TRIMMERS

ALIGNING INSTRUCTIONS:

CAUTION:—No aligning adjustments should be attempted without first thoroughly checking over all other possible causes of trouble, such as poor installations, open or grounded antenna systems, low line voltages, defective tubes, condensers and resistors. In order to properly align this chassis, an oscillator (generator) is absolutely necessary.

No aligning adjustments should be attempted with the chassis in the cabinet. Remove the knobs and the four bolts which are used to fasten the chassis.

All adjustments should be made with a non-metallic screw driver.

RESONANCE INDICATOR:

Use as a resonance indicator an output meter connected across the primary of the speaker input transformer, or by means of an adapter between the plate and screen terminals of the type 6F6G output tube. Maximum deflection of the meter indicates resonance. Use only enough signal to get a readily readable output. A low range output meter or the low scale of a multi-range meter should be used.

DUMMY ANTENNAS:

The following dummy antennas are used in aligning and are referred to in the following alignment instructions as "Dummy 1," "Dummy 2," and "Dummy 3."

Dummy 1: (I.F.)—Consists of a .1 mfd. condenser connected in series with the external oscillator.

Dummy 2: (Broadcast)—Consists of a 200 mmfd. condenser and a 20 ohm resistor connected in series with each other and in series with the external oscillator.

Dummy 3: (Middle and Short Wave)—Consists of a .1 mfd. condenser and a 400 ohm resistor connected in series with each other and in series with the external oscillator.

ALIGNING I.F. TRANSFORMERS: (465 K.C.):

Part No. 108-73 Output I.F. Transformer
Part No. 108-74 Input I.F. Transformer

These I.F. transformers have two adjustments, both of which are accessible from the top of chassis (see top view).

1. With volume control full on (the extreme right of its rotation), the band changing switch in the broadcast position, (extreme left of its rotation), and with the variable condenser set to approximately 1400 kilocycles, make the following adjustments:

   (a) Connect external oscillator set at 465 kilocycles, in series with "Dummy 1," to the control grid cap of the type 6K7G tube, and adjust the output I.F. transformer (No. 108-73) to resonance.

   (b) With "Dummy 1" still connected, move oscillator output clip from grid of 6K7G to grid cap to 6L7 and adjust input I.F. transformer (No. 108-75) to resonance.

   (c) With oscillator still connected to 6L7, readjust output I.F. transformer (108-73) if necessary.

BROADCAST BAND ALIGNMENT:

535 to 1720 Kilocycles

1. With band changing switch in the broadcast position, extreme left of its rotation, and with gang condenser in its minimum capacity position, plates entirely out of mesh, and with external oscillator connected in series with "Dummy 2" to tan antenna lead and black ground lead, make following adjustments:

   (a) Set external oscillator to 1720 K.C. and adjust broadcast oscillator trimmer to resonance (Adjustment number 1; see bottom view of coil assembly, Fig. 3)

   (b) Re-set external oscillator to 1550 K.C., rotate variable gang condenser and pick up signal. Adjust broadcast antenna trimmer (Adjustment number 4) to resonance; also adjust preselector trimmer which is mounted on the top of the rear section of the three gang variable tuning condenser to resonance. (See top view of chassis, Fig. 1, for location of this adjustment).

   (c) Re-set external oscillator to 600 K.C., and adjust broadcast series pad to resonance by rotating condenser to approximately 600 K.C., rocking it slowly to and fro until by adjusting series pad maximum output is attained. This adjustment is located on the bottom of the chassis directly under the variable gang condenser. (See bottom view of chassis, Fig. 3).

   (d) Repeat adjustments "a" and "b" until sensitivity is at its maximum.

   (e) Check for tracking and sensitivity at 1000 kilocycles. **Under no circumstances bend plates of variable condenser sections to correct tracking.**

SHORT WAVE BAND ALIGNMENT:

5.2 to 18.3 Megacycles

1. With band changing switch in the short wave position, extreme right of its rotation, and with external oscillator set at 17 megacycles and connected in series with "Dummy 3" to the tan antenna and black ground lead, make the following adjustments:

   (a) Move dial pointer to 17 megacycles and adjust short wave oscillator (Adjustment number 3) and short wave antenna (Adjustment number 6) to resonance.

   (b) Re-set external oscillator to 6 megacycles and pick up signal by rotating variable condenser and check sensitivity.

   (c) Re-set external oscillator and check set at 18.1 megacycles and 5.3 megacycles for band coverage.

NOTE: It is extremely necessary in making all of these adjustments that the fundamental oscillator signal be tuned in and not the image frequency which will fall below the fundamental on the receiver dial. As an example of this a fundamental 18.3 megacycle signal can be tuned in not only at 18.3 on the dial but also at approximately 17.4 megacycles.

MIDDLE WAVE BAND ALIGNMENT:

1695 to 5500 Kilocycles

1. With band changing switch in the middle wave position, center of its rotation, and with external oscillator set at 5000 kilocycles and connected in series with "Dummy 3" to the tan antenna and black ground lead, make the following adjustments:

   (a) Move dial pointer to 5000 kilocycles and adjust middle wave oscillator (adjustment number 2) and middle wave antenna (adjustment number 5) to resonance.

   (b) Re-set external oscillator to 1800 kilocycles and pick up signal by rotating variable condenser and check sensitivity.

   (c) Re-set external oscillator and check set at 5400 kilocycles and 1700 kilocycles for band coverage.

MODELS 62-320, 62-325

Schematic, Voltage
Alignment, Socket

MONTGOMERY WARD & CO.

Power Consumption - 48 Watts (At 117 volts AC Supply)
Power Output - - - - - - - .8 Watts Undistorted
Selectivity - - 30 KC Broad at 100 times Signal

Tuning Frequency Range - - - - - 530 to 1730 KC
Sensitivity - - - - - - - 180 Microvolts Average

DC OPERATION—Filament and ballast tube voltages will be the same as AC (for 117 volt line). The plate, screen and bias voltages will be slightly lower than those shown above. When operated on DC, the rectifier tube acts as a low resistance series resistor with a drop of approximately 6 volts between plate and cathode.

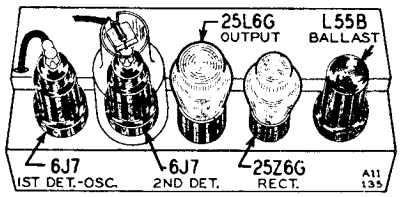

CAUTION—In any service work on the AC-DC chassis, keep it on a wood or other insulated surface to avoid contacts with ground.

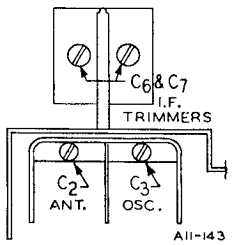

VOLTAGES AT SOCKETS FOR 117 VOLT *AC LINE*

See Note Below Regarding Voltages when Operated on DC
Volume Control Maximum—Antenna Lead Grounded—Readings taken with 1000 Ohm-per-volt Meter.

TUBE	FUNCTION	Voltage Between Socket Prong and Ground (Unless Otherwise Indicated)							
		Prong No. 1	Prong No. 2	Prong No. 3	Prong No. 4	Prong No. 5	Prong No. 6	Prong No. 7	Prong No. 8
6J7	1st Det. & Osc.		6.3(1)	98	98			6.3(1)	6.0
6J7	2nd Det.		6.3(1)	10	13			6.3(1)	
25L6G	Output		24(1)	92	98			24(1)	5
25Z6G	Rectifier		24(1)	117(2)	125	117(2)		24(1)	125
L55B	Ballast			56.6(3)				56.6(3)	4.5(4)

(1) AC voltage across terminals 2 and 7.
(2) AC voltage to ground.
(3) AC voltage across terminals 3 and 7.
(4) AC voltage across terminals 7 and 8.

ALIGNMENT PROCEDURE

Volume Control—Maximum All Adjustments, Allow Chassis and Signal Generator to "Heat Up" for Several Minutes.

SIGNAL GENERATOR FREQUENCY SETTING	SIGNAL GENERATOR CONNECTION AT RADIO	DUMMY ANTENNA	CONDENSER SETTING	ADJUST TRIMMERS TO MAXIMUM (See Illustration)
456 KC	Grid of 1st Det.	.1 mf.	Turn rotor to full open	I.F. (C6) & (C7)
1730 KC	Antenna Lead	200 mmf.	Turn rotor to full open	Oscillator (C3)
1500 KC	Antenna Lead	200 mmf.	Turn rotor to max. output	Antenna (C2)

The following equipment is required for aligning:
Signal Generator which will provide an accurately calibrated signal at the test frequencies as listed.
Output Indicating Meter; Non-Metallic Screwdriver.
Dummy Antennas — .1 mf. and 200 mmf.

NOTE—To obtain dial scale calibration, tune in an 800 KC signal. The pointer should be at the 800 KC mark on the dial. If it is not, loosen the pointer screw, set the pointer at the 800 KC mark and retighten the pointer screw.

MAY, 1938

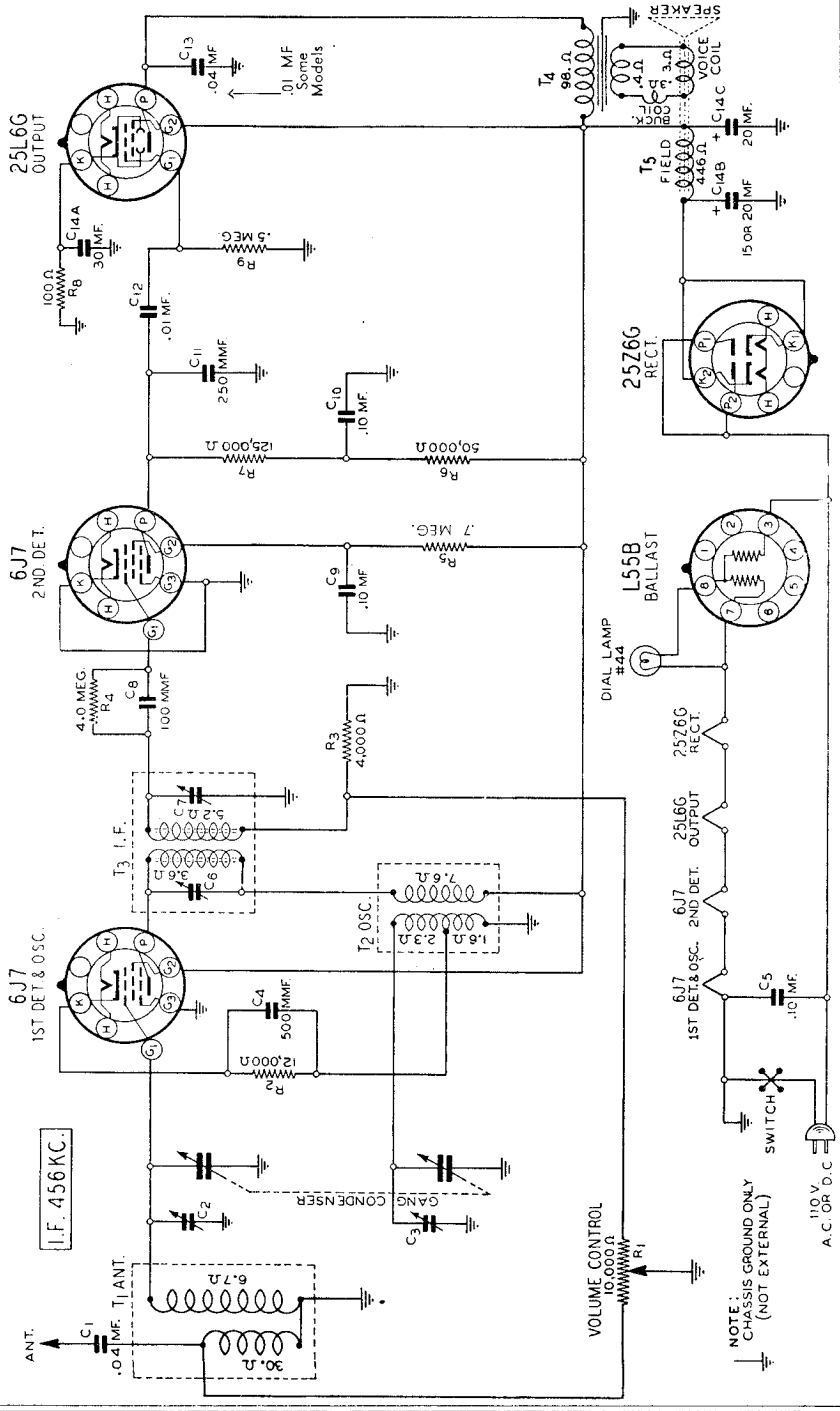

©John F. Rider, Publisher

MONTGOMERY WARD & CO.

MODELS 62-322, 62-422
Schematic, Socket, Tuner Voltage

7 Tube 32 Volt Radio

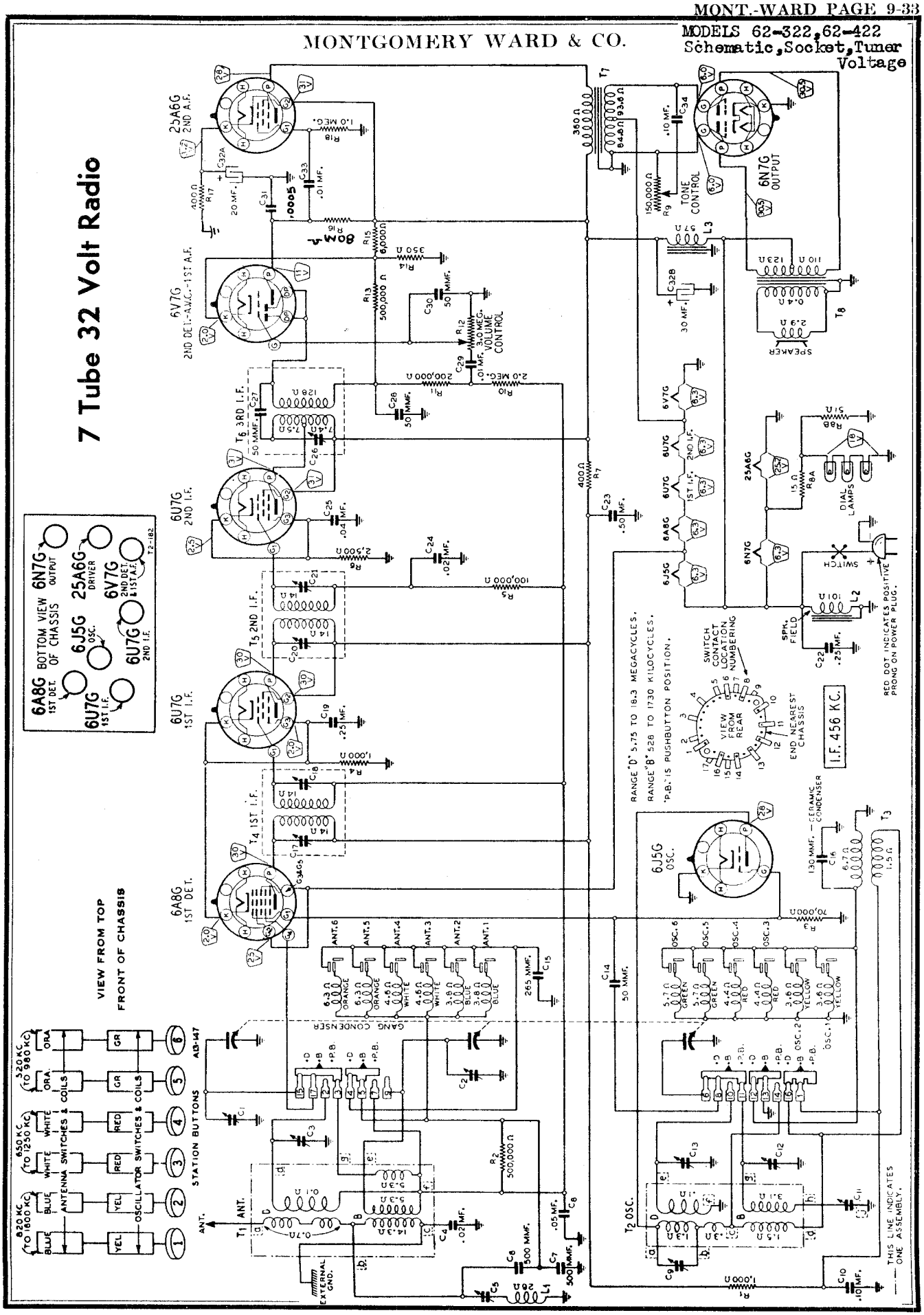

©John F. Rider, Publisher

©John F. Rider, Publisher

MODEL 62-402 " 62-1101

ALIGNMENT PROCEDURE

Volume Control—Maximum All Adjustments.

Connect Radio Chassis to Ground Post of Signal Generator with a Short Heavy Lead.

Allow Chassis and Signal Generator to "Heat Up" for several minutes.

IMPORTANT—Follow procedure in the order shown.

The following equipment is required for aligning:

An All Wave Signal Generator which will provide an accurately calibrated signal at the test frequencies as listed.

Output Indicating Meter—Non-Metallic Screwdriver.

Dummy Antennas—.1 mf., 200 mmf., and 400 ohms.

SIGNAL GENERATOR FREQUENCY SETTING	SIGNAL GENERATOR CONNECTION AT RADIO	DUMMY ANTENNA	BAND SWITCH SETTING	CONDENSER SETTING	ADJUST TRIMMERS TO MAXIMUM
I. F.					
456 KC	Grid of 1st Det.	.1 mf.	B Range	Turn Rotor to Full Open	2nd I.F. (C23) & (C24) 1st I.F. (C20) & (C21)
RANGE D					
18,300 KC	Antenna Lead	400 Ohm	D Range	Turn Rotor to Full Open	Oscillator Range D (C10)
15,000 KC	Antenna Lead	400 Ohm	D Range	Turn Rotor to Max. Output	Ant. Range D (C2) Int. Range D (C6) Rock Rotor—See Note A
RANGE C					
5400 KC	Antenna Lead	400 Ohm	C Range	Turn Rotor to Full Open	Oscillator Range C (C11)
5000 KC	Antenna Lead	400 Ohm	C Range	Turn Rotor to Max. Output	Antenna Range C (C3) Int. Range C (C7)
RANGE B					
1600 KC	Antenna Lead	200 mmf.	B Range	Turn Rotor to Full Open	Oscillator Range B (C12)
1400 KC	Antenna Lead	200 mmf.	B Range	Turn Rotor to Max. Output Set Indicator to 1400 KC— See Note B	Ant. Range B (C4) Int. Range B (C8)
600 KC	Antenna Lead	200 mmf.	B Range	Turn Rotor to Max. Output	600 KC (C13) Rock Rotor—See Note A

Attenuate the signal from the signal generator to prevent the leveling-off action of the AVC.

After each range is completed, repeat the procedure as a final check.

NOTE A—Turn the rotor back and forth and adjust the trimmer until the peak of greatest intensity is obtained.

NOTE B—If the pointer is not at 1400 KC on the dial, loosen the 2 clamps which hold the pointer assembly on the cord, move the pointer to the 1400 KC mark, and tighten the clamps.

CAUTION—When aligning the short wave bands be sure NOT to adjust at the image frequency. This can be checked as follows: Let us say the signal generator is set for 5000 KC. The signal will then be heard at 5000 KC on the dial of the radio. The image signal, which is much weaker, will be heard at 5000 less 912 KC, or 4088 KC on the dial. It may be necessary to increase the input signal to hear the image.

Phonograph Connections

Phonograph connections are made as shown in the schematic circuit diagram—Fig. 3. On the top of the chassis base and between two of the 76 tube sockets is a round knockout 1⅜ inches in diameter. An octal base socket is mounted in this knockout opening and wired as shown in the schematic.

Tone Control

There are 3 wiring lugs on the tone control. One of the end lugs connects to one end of the tone control resistor. The center lug connects to the slider. The other end lug on the tone control is used for external wiring purposes only and is not connected to the tone control resistor in any way. One side of the tone control condenser and a wire from the B+ line are connected at this lug.

Twenty-Five Cycle Models

The twenty-five cycle receiver differs from the sixty cycle receiver only in the fact that a different power transformer is used.

Voltages at Sockets

The voltages at sockets are shown on the schematic circuit diagram. Unless otherwise specified, the voltage indicated is between the socket terminal and ground.

These voltages are read under the following conditions:

Line Voltage—117.

Volume Control—Maximum.

Antenna Shorted to Ground.

Readings taken with 1000 ohm-per-volt meter.

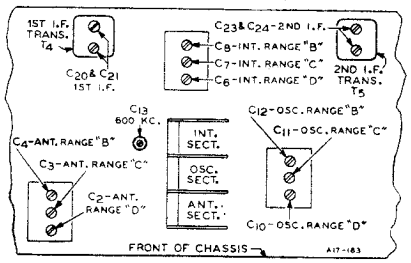

Location of Trimmers

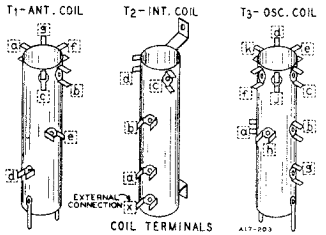

Model 62-322 " 62-422

ALIGNMENT PROCEDURE

Volume Control—Maximum All Adjustments.

Connect Radio Chassis to Ground Post of Signal Generator with a Short Heavy Lead.

Allow Chassis and Signal Generator to "Heat Up" for several minutes.

The following equipment is required for aligning:

An All Wave Signal Generator which will provide an accurately calibrated signal at the test frequencies as listed.

Output Indicating Meter—Non-Metallic Screwdriver.

Dummy Antennas—.1 mf., 200 mmf., and 400 ohms.

SIGNAL GENERATOR FREQUENCY SETTING	SIGNAL GENERATOR CONNECTION AT RADIO	DUMMY ANTENNA	BAND SWITCH	CONDENSER SETTING	ADJUST TRIMMERS TO MAXIMUM (Unless otherwise specified)
I. F.					
456 KC	Grid of 1st Det.	.1 mf.	B Range	Turn Rotor to Full Open	1st I.F. (C17) & (C18) 2nd I.F. (C20) & (C21) 3rd I.F. (C26)
RANGE B					
1730 KC	Antenna Lead	200 mmf.	B Range	Turn Rotor to Full Open	Oscillator Range B (C12)
1500 KC	Antenna Lead	200 mmf.	B Range	Turn Rotor to Max. Output Set Indicator to 1500 KC— See Note A	1st Ant. Range B (C2) 2nd Ant. Range B (C1)
600 KC	Antenna Lead	200 mmf.	B Range	Turn Rotor to Max. Output	600 KC (C11) Rock Rotor—See Note B
WAVE TRAP					
456 KC	Antenna Lead	200 mmf.	B Range	Turn Rotor to 600 KC Adjust Sig. Gen.—See Note C	Wave Trap (C5) Adjust for MINIMUM Output
RANGE D					
18,300 KC	Antenna Lead	400 Ohm	D Range	Turn Rotor to Full Open	Oscillator Range D (C13)
15,000 KC	Antenna Lead	400 Ohm	D Range	Turn Rotor to Max. Output	Ant. Range D (C3) Rock Rotor—See Note B
6000 KC	Antenna Lead	400 Ohm	D Range	Turn Rotor to Max. Output	6000 KC (C9) Rock Rotor—See Note B
PERMEABILITY TUNING UNIT			BUTTON DEPRESSED (Band Switch in Push Button Position)	TURN SETTING SCREW TO MAXIMUM OUTPUT —See Instruction Book	ADJUST COIL POSITION TO MAXIMUM OUTPUT —See Note D
1100 KC	Antenna Lead	200 mmf.	No. 1	Setting Screw No. 1	Antenna Coil No. 1
1100 KC	Antenna Lead	200 mmf.	No. 2	Setting Screw No. 2	Antenna Coil No. 2
850 KC	Antenna Lead	200 mmf.	No. 3	Setting Screw No. 3	Antenna Coil No. 3
850 KC	Antenna Lead	200 mmf.	No. 4	Setting Screw No. 4	Antenna Coil No. 4
700 KC	Antenna Lead	200 mmf.	No. 5	Setting Screw No. 5	Antenna Coil No. 5
700 KC	Antenna Lead	200 mmf.	No. 6	Setting Screw No. 6	Antenna Coil No. 6

Attenuate the signal from the signal generator to prevent the leveling-off action of the AVC.

After each range is completed, repeat the procedure as a final check.

NOTE A—If the pointer is not at 1500 KC on the dial, loosen the 2 clamps which hold the pointer assembly on the cord, move the pointer to the 1500 KC mark, and tighten the clamps.

NOTE B—Turn the rotor back and forth and adjust the trimmer until the peak of greatest intensity is obtained.

NOTE C—Leave condenser rotor at the 600 KC setting and adjust the signal generator until maximum output is obtained at or near 456 KC.

NOTE D—At the top of the permeability tuning unit can be seen six "W" openings. Insert the end of a pair of long nose pliers or a screwdriver in the "W" opening of the proper button and adjust the position of the antenna (rear) coil by twisting the pliers or screwdriver until maximum output is obtained.

CAUTION—When aligning the short wave band be sure NOT to adjust at the image frequency. This can be checked as follows: Let us say the signal generator is set for 15,000 KC. The signal will then be heard at 15,000 on the dial of the radio. The image signal, which is much weaker, will be heard at 15,000 less 912 KC, or 14,088 KC on the dial. It may be necessary to increase the input signal to hear the image.

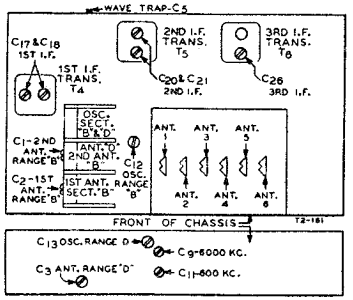

MONTGOMERY WARD & CO.

MODELS 62-331, 62-441
Schematic, Specifications

Power Consumption - - 2.0 Amperes at 6.3 Volts
Power Output - - - - - 1.0 Watt Undistorted
Selectivity - - 21 KC Broad at 1000 times Signal
(Sharp)
Intermediate Frequency - - - - - - - - 456 KC.
Speaker - - - - - - - - - 8" P.M. Dynamic

Tuning Frequency Range

B Range	528 to 1730 KC.
C Range	1710 to 5800 KC.
D Range	5750 to 18300 KC.

Sensitivity

B Range	1 to 3 Microvolts Absolute
C Range	1 to 4 Microvolts Absolute
D Range	1 to 7 Microvolts Absolute

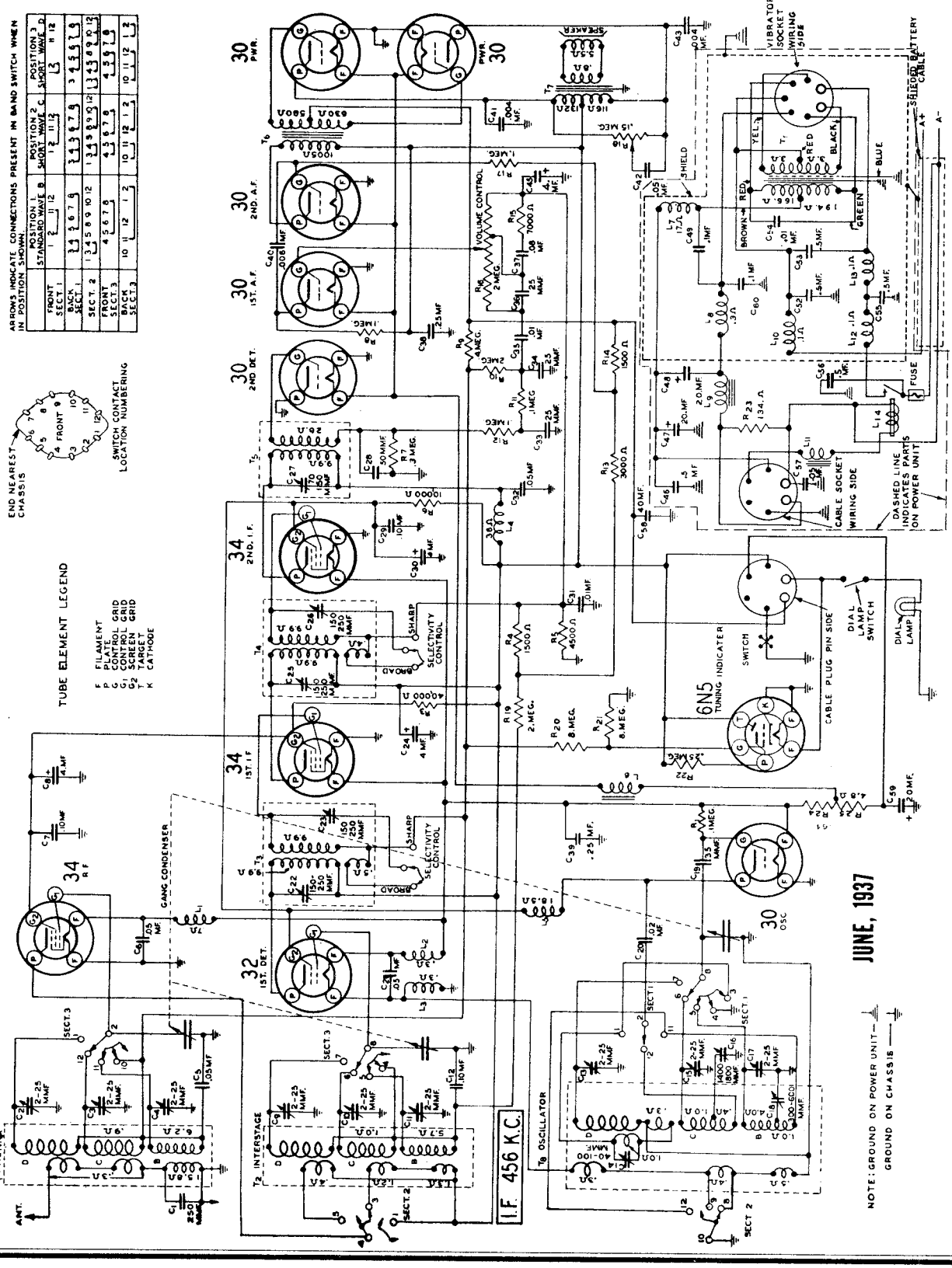

©John F. Rider, Publisher

©John F. Rider, Publisher

MODEL 62-331
" 62-441

Alignment and Calibration

I.F. Adjustment

Set the signal generator for a signal of 456 KC.

Connect the output of the signal generator through a .1 mf. condenser to the grid of the 1st detector.

Connect the ground lead of the receiver to the ground post of the signal generator.

Turn the band switch to the Range B position (standard wave band).

Turn the selectivity control to the sharp position and keep it in this position for all adjustments.

Turn the volume control to the maximum position.

Attenuate the signal from the signal generator to prevent the levelling-off action of the AVC.

Then adjust the five I.F. trimmers until maximum output is obtained. The adjusting screws for these condensers are reached from the top of the chassis and the location is shown in Fig. 3.

Range B Alignment

After the procedure for the alignment of each range, as explained below, is completed, it is advisable to repeat the procedure as a final check.

1730 KC Adjustment

Set the signal generator for 1730 KC.

Turn the rotor of the tuning condenser to the full open position.

Keep the band switch in the standard wave position.

Connect the antenna lead of the receiver through a 200 mmf. condenser to the output of the signal generator.

For this and all subsequent adjustments keep the volume control at the maximum position and attenuate the signal from the signal generator to prevent AVC action.

Adjust the oscillator Range B trimmer (C17) until maximum output is obtained. The location of this trimmer is shown in Fig. 3.

1500 KC Adjustment

Set the signal generator for 1500 KC.

Turn the rotor of the tuning condenser carefully until maximum output is obtained.

Turn the calibration screw (under color filter) until the 1500 KC mark on the dial scale is at the vertical red line on the screen. If the film drum cannot be turned a sufficient amount by means of the calibration screw, loosen the 2 screws inside the drum which hold it in place. Adjust the position of the drum and tighten the screws. The early models do not have the calibration screw mentioned above. These models must be adjusted by loosening the drum screws.

Adjust the interstage Range B trimmer (C11) and antenna Range B trimmer (C4) to maximum.

Do not change the setting of the oscillator Range B trimmer.

600 KC Adjustment

Set the signal generator for 600 KC.

Turn the tuning condenser rotor until maximum output is obtained.

Turn the rotor slowly back and forth, at the same time adjusting the 600 KC trimmer, until the peak of greatest intensity is obtained. See Fig. 3 for location of this trimmer.

Range C Alignment

CAUTION—When aligning the short wave bands be sure NOT to adjust at the image frequency. This can be checked as follows: Let us say the signal generator is set for 5000 KC. The signal will then be heard at 5000 KC on the dial of the radio. The image signal, which is much weaker, will be heard at 5000 less 912 KC, or 4088 KC. It may be necessary to increase the input signal to hear the image.

5800 KC Adjustment

Set the signal generator for 5800 KC.

Connect the antenna lead of the receiver through a 400 ohm resistor to the output of the signal generator.

Turn the rotor of the tuning condenser to the full open position.

Turn the band switch to the Range C position (first short wave band).

Adjust the oscillator Range C trimmer (C15) until maximum output is obtained. See Fig. 3 for location of this trimmer.

5000 KC Adjustment

Set the signal generator for 5000 KC.

Turn the rotor of the tuning condenser carefully until maximum output is obtained.

Adjust the interstage Range C trimmer (C10) and antenna Range C trimmer (C3) to maximum.

Do not change the setting of the oscillator Range C trimmer.

1800 KC Adjustment

Set the signal generator for 1800 KC.

Turn the tuning condenser rotor until maximum output is obtained.

Turn the rotor slowly back and forth, at the same time adjusting the 1800 KC trimmer, until the peak of greatest intensity is obtained. See Fig. 3 for location of this trimmer.

Range D Alignment

18,300 KC Adjustment

Set the signal generator for 18,300 KC.

Keep the antenna lead of the receiver connected through the 400 ohm resistor to the output of the signal generator.

Turn the rotor of the tuning condenser to the full open position.

Turn the band switch to the Range D position (second short wave band).

Adjust the oscillator Range D trimmer (C13) until maximum output is obtained. See Fig. 3 for location of this trimmer.

15,000 KC Adjustment

Set the signal generator for 15,000 KC.

Turn the rotor of the tuning condenser carefully until maximum output is obtained.

Adjust the interstage Range D trimmer (C9) and antenna Range D trimmer (C2) to maximum.

When adjusting the interstage and antenna Range D trimmers, it will be necessary at the same time to turn the tuning condenser rotor slowly back and forth until the peak of greatest intensity is obtained.

Do not change the setting of the oscillator Range D trimmer.

6000 KC Adjustment

Set the signal generator for 6000 KC.

Turn the tuning condenser rotor until maximum output is obtained.

Turn the rotor slowly back and forth, at the same time adjusting the 6000 KC trimmer, until the peak of greatest intensity is obtained. See Fig. 3 for location of this trimmer.

MODELS 62-331 & 62-441

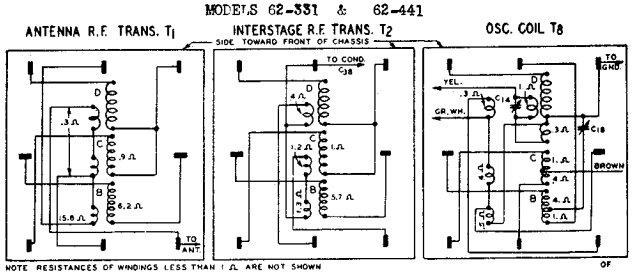

R.F. and Oscillator Coil Base Terminal Arrangement and D.C. Resistance of Windings

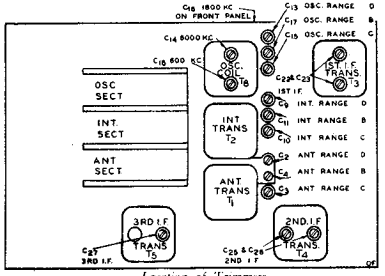

Location of Trimmers

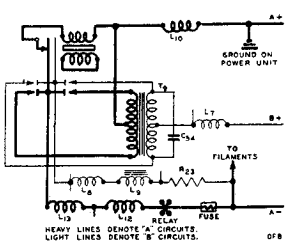

Abridged Wiring Diagram Showing Action of Synchronous Vibrator

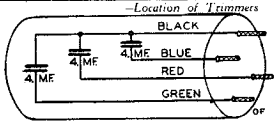

Electrolytic Condenser Internal Connections

VOLTAGES AT SOCKETS

Battery Voltage: 6.2
Volume Control: Maximum
Readings taken with 1000 Ohm-per-volt meter.
Antenna Shorted to Ground
Position of Band Switch: Standard Wave

Tube	Function	Across Filament	Plate to Ground	Screen to Ground	Control Grid to Ground
34	R. F.	2.0	140	65	0(1)
32	1st Det.	2.0	140	95	0(2)
30	Osc.	2.0	90		
34	1st I. F.	2.0	140	65	0(1)
34	2nd I. F.	2.0	140	95	4
30	2nd Det.	2.0			
30	1st A. F.	2.0	50		0(3)
30	2nd A. F.	2.0	135		0(4)
30	Power	2.0	140		10.5
6N5	Tuning Indicator	6.2	30	Target to Ground 140	

(1) Bias (10.5 volts) as read across R14, 13, 4, 5.
(2) Bias (5.5 volts) as read across R4, 5.
(3) Bias (4 volts) as read across R5.
(4) Bias (8.5 volts) as read across R12, 4, 5.

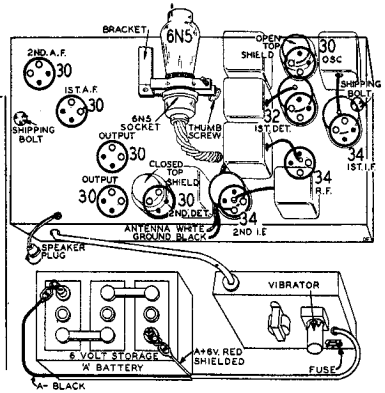

Tube Arrangement and Battery Connections

Trimmer, Alignment Coils, Specifications

MONTGOMERY WARD & CO.

MODEL 62-334
Schematic, Socket

Power Consumption - - 5.5 Amperes at 6.3 Volts
Power Output - - - - - - - .8 Watt Undistorted
Sensitivity - - 10 Microvolts at .5 Watt Output
Selectivity - 42.5 KC Broad at 1000 Times Signal

Tuning Frequency Range - - - 528 to 1550 KC
Intermediate Frequency - - - - - - - 456 KC
Speaker - - - - - - - - - - - 6" Dynamic

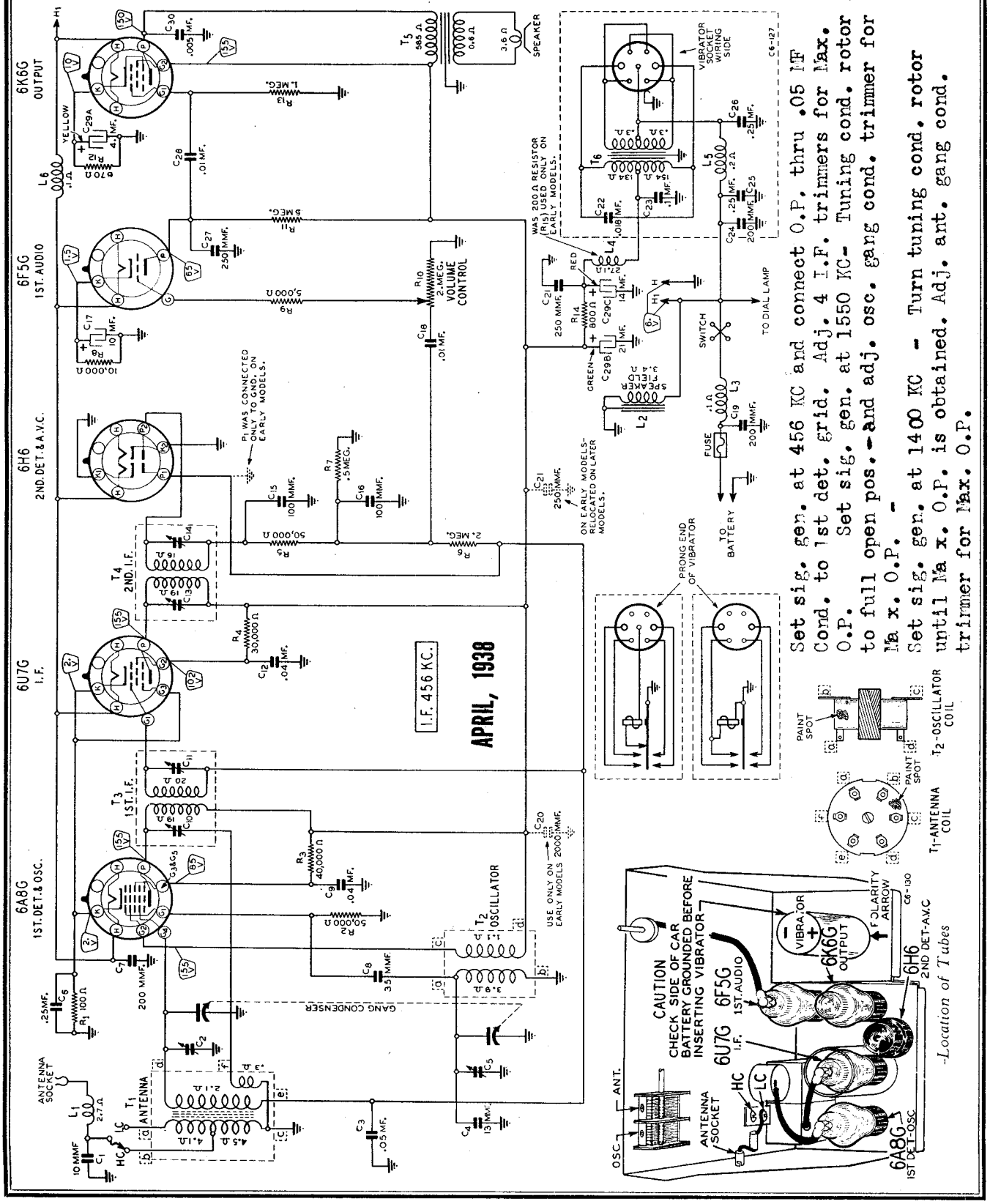

©John F. Rider, Publisher

Antenna

IMPORTANT—Inside of the chassis as shown in Fig. 3 is a terminal strip with letters HC and LC on it.

The antenna lead must be properly connected at the terminal strip, depending on whether a high or low capacity antenna is used.

The following tabulation explains what is meant by High Capacity (HC) and Low Capacity (LC) antennas.

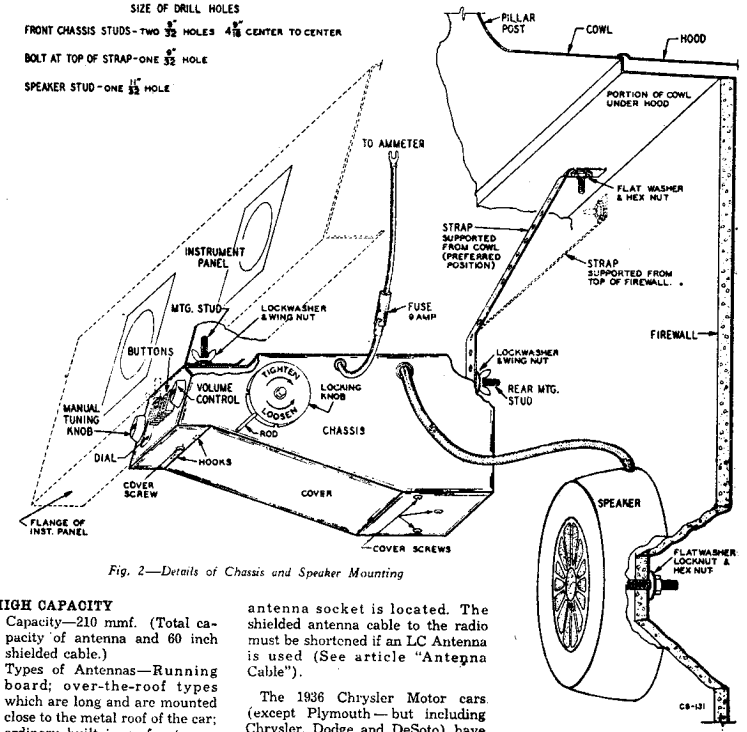

Fig. 2—Details of Chassis and Speaker Mounting

HIGH CAPACITY

Capacity—210 mmf. (Total capacity of antenna and 60 inch shielded cable.)

Types of Antennas—Running board; over-the-roof types which are long and are mounted close to the metal roof of the car; ordinary built in roof antennas (not metal roof).

LOW CAPACITY

Capacity—60 mmf. (Total capacity of antenna and shielded cable cut to about 30 inch length.)

Types of Antennas—Door hinge; fishpole; over-the-roof types which are mounted quite a distance from the metal roof of the car.

Most of the 1937 and 1938 cars have steel roofs and it will be necessary to use a door hinge, fish pole, over-the-roof, or running board antenna. In all of the above installations, the antenna should be mounted on the same side of the car the radio is mounted or the same side as the antenna socket is located. The shielded antenna cable to the radio must be shortened if an LC Antenna is used (See article "Antenna Cable").

The 1936 Chrysler Motor cars (except Plymouth — but including Chrysler, Dodge and DeSoto) have a steel roof, separated from the body proper, which is used as an antenna. The capacity of these antennas is about 1500 mmf. If this radio is installed in these cars, it will be necessary to use a running board, fish pole, or door hinge antenna.

If, after reading the above information and the following paragraphs, it is found necessary to change the antenna connection within the chassis, proceed as follows: Remove the chassis case cover as explained in the article "Removing Chassis Cover." The wire which connects to the terminal strip shown in Fig. 3 should be fastened under the HC or LC screw, depending on which is proper.

Antenna Cable

A 60 inch shielded antenna cable with a capacity of 70 mmf. is regularly supplied.

This cable is long enough in practically all cases to reach the pillar post or column at which a roof antenna lead comes down and also to reach the running board antenna.

CUT CABLE FOR LC ANTENNA—The 60 inch cable supplied with the radio will be found to be too long for most door hinge, fishpole and over-the-roof type antenna installations. Furthermore, *the capacity of the cable plus that of either of the above antennas is too large for the LC connection. Therefore, it is necessary to cut the antenna cable to about 30 inches in length.* This will be found to be of sufficient length in practically all cases.

To shorten the cable, pull the wire out of the cable from the plug end. Then cut the shielding and loom to the correct length. Cut the pigtail off the excess piece of cable and solder it to the shield at the end of the shortened cable. Insert the wire in the cable again and cut the wire to the correct length.

Keep the antenna cable as far away from car wiring as possible and ground the pigtail of the antenna cable shield at the antenna end, otherwise ignition noise may be picked up. The length of the pigtail from the grounding point to the end of the antenna cable should be kept as short as possible, preferably not over one inch.

For the door hinge and over-the-roof type antenna, the antenna lead must be shielded the entire distance from the radio to the point where the lead goes through the car body to the outside. In the case of the running board antenna, the antenna lead shielding must extend all the way to the antenna.

When the antenna cable is connected to an antenna lead coming down the pillar post, the shielded cable should be pushed several inches up into the pillar post.

Procedure for Setting the Station Buttons

There are 4 buttons on the automatic tuning dial by means of which 4 stations may be set.

Any button may be used for any station you can receive.

Make a list of your favorite stations, those which you tune in regularly.

It is better to list the station with the highest kilocycle number first, the station with the next lower kilocycle number next, and so on.

Grasp the locking knob shown in Fig. 2. In most cases, this knob can be reached with the hand from the right side of the radio. If, due to crowded conditions, the knob cannot be reached with the hand, the metal rod supplied may be inserted in one of the holes in the edge of the knob. Rotate the locking knob about two turns in the direction indicated until the mechanism is felt to loosen.

Select the first station from the list you have made and carefully tune in

button so that the call letters can be properly read when viewed from the driver's seat. Push the tab all the way to the front of the slot. Slip one of the celluloid tabs over the call letter tab. Then push the button back on its shaft making sure the shaft goes into the center opening in the button.

Carefully tune in the second station on your list. Then hold the manual tuning knob and push the second button slowly and firmly all the way in. Check for accurate tuning and insert the station call letter tab exactly as explained above. When pushing the button on its shaft, care should be taken not to push in one of the adjacent buttons.

After all the stations are set, it will be necessary to lock the mechanism so that the settings will not change.

Grasp the locking knob shown in Fig. 2 or, use the metal rod previously mentioned, and rotate the this station by means of the manual tuning knob.

With one hand, hold the manual tuning knob to prevent it from turning and with the other hand, push one of the station buttons shown in Fig. 2 *all the way in.* It will go in easily at first and then a firm gentle pressure must be applied to push it in the rest of the way. Start with the right hand button.

Hold *this* button all the way in. With the other hand, see if this station is still accurately tuned in by turning the manual tuning knob a slight amount back and forth. *Be sure to hold the button all the way in.*

Release the button after the station is tuned in.

Remove the correct station call letter tab from the sheet supplied by tearing the sheet at the score marks.

Now pull this button off its shaft noting which side is the top. Slip the call letter tab in the top slot of the knob in the direction indicated. Continue to turn the knob until you are certain that it is tight. Otherwise, the station buttons will not remain set for the selected stations.

If at any time you wish to change the setting of a button from one station to another, repeat the above procedure. Changing the setting of one button will not affect the setting of any of the other buttons. The old call letter tab may be removed by pulling the knob off its shaft and slipping the tab out of the slot in the button.

WHEEL OR BRAKE STATIC—Noise from this source is generally experienced only when an under car antenna is being used. To determine if noise is being caused from this source, set the car in motion; then with the motor shut off and the clutch disengaged, apply the brakes. If the noise stops, the source of the static is in the wheels. The use of a front or rear wheel static eliminator will generally end the trouble.

denser permanently if there is an improvement.

In like manner, try a .5 mfd. condenser from car fuse to ground, switch to ground, tail light and stop light connections to ground, windshield wiper and various other 6 volt connections to ground, noting what effect these condensers have on the noise pick-up.

HIGH AND LOW TENSION LEADS—In some cases, the high and low tension leads between the coil and distributor are run close together. In some cars, they are in the same conduit. If this is the case, remove the low tension lead from this conduit. In any event, keep the high and low tension leads as far apart from each other as possible. If separating the two leads is not sufficient, shield and ground the shield of the low tension lead.

GROUNDING MOTOR AND OTHER PARTS—The motor must, in every case, be well grounded to the frame of the car. If it is not, use a very heavy braided lead for this purpose, similar to a storage battery ground lead. In like manner, it may be necessary to check the grounding of the metal fire wall, instrument panel, transmission, radiator, hood, and muffler to the frame of the automobile. To obtain a good electrical connection, scrape off the paint, if necessary, at the point where ground contact is made.

DOME LIGHT LEAD—Noise due to radiation from the dome light lead is generally experienced only when a roof antenna is being used. Disconnect the dome light lead connection at the back of the instrument panel and ground this wire. If this is found to reduce the noise noticeably, interference is being radiated by the dome light lead. Reconnect the dome light lead and then connect a .5 mfd. bypass condenser between the point at which this lead leaves the pillar post and ground.

BYPASS CONDENSERS—Try a .5 mfd. bypass condenser from the ammeter to ground and see if interference is reduced. Install this con-

Try a .5 mfd. condenser from the "Hot" side of the coil primary to ground.

The electric gauges used for oil, water, and gas are often a source of interference and bypass condensers should be tried.

©John F. Rider, Publisher

MODEL 62-345
Schematic, Voltage
Socket, Trimmer
Alignment, Parts

MONTGOMERY-WARD & CO.

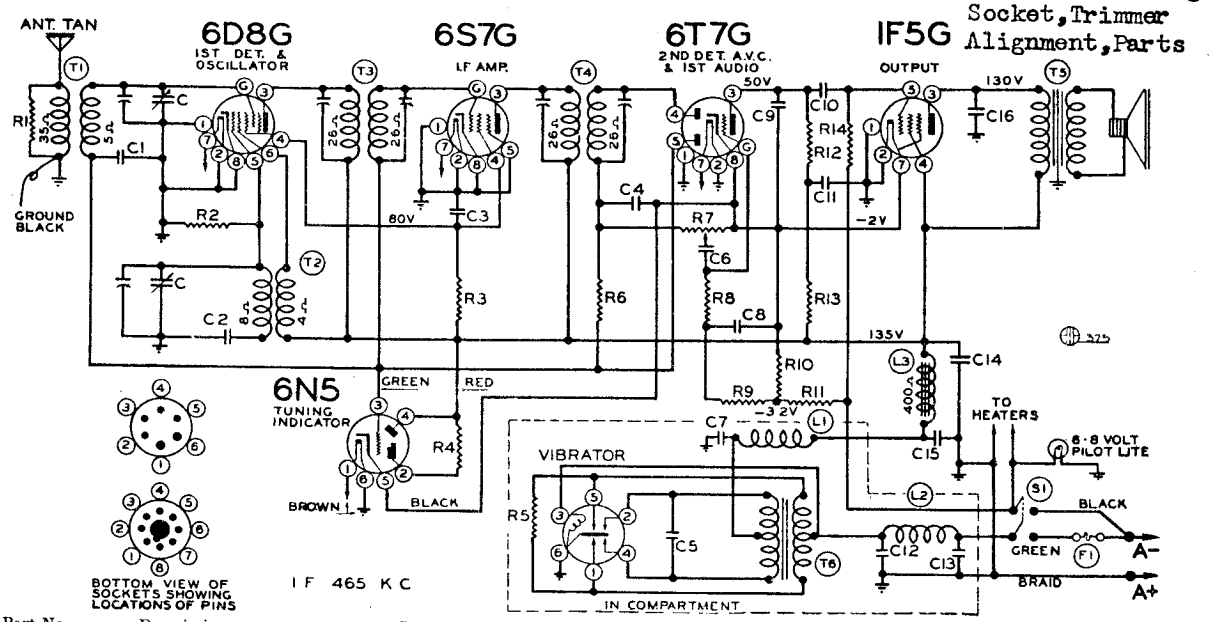

No.	Part No.	Description
		CONDENSERS
C	102-52	2 Gang Variable
C1	100-9	.05x200 v. 25%
C2	129-75	.0003386 Comp. Cond. +—1% (Padder)
C3	100-33	.1x200 v. —50-10%
C4	129-5	.0001 Mica 20%
C5	100-34	.005x1200 10%
C6	100-11	.01x400 25%
C7	100-33	.1x200 —50-10%
C8	100-11	.01x400 25%
C9	129-12	.00025 Mica 20%
C10	100-11	.01x400 25%
C11	100-33	.1x200 v. —50-10%
C12	100-40	.5x200 20%
C13	100-40	.5x200 20%
C14	119-40	5.0 lytic 200 w. v.
C15	119-40	5.0 lytic 200 w. v.
C16	100-37	.003x600 v. 10%
		C14 and C15 in same unit.
		RESISTORS
R1	130-17	10M 1/3 20%
R2	130-12	50M 1/3 20%
R3	130-149	15M 1/3 20%
R4		250M in tuning indicator socket
R5	130-84	200 ohm — 1/3 w. 20%
R6	130-4	3 meg 1/3 20%
R7	101-80	1 meg volume control
R8	130-19	1 meg — 1/3 20%
R9	130-19	1 meg — 1/3 20%
R10	106-40	10 ohm
R11	106-40	21 ohm
R12	130-100	150M ohm—1/3 w. 20%
R13	130-20	100M ohm—1/3 w. 20%
R14	130-19	1 meg — 1/3 w. 20%
		R10 and R11 in same unit.
		PARTS
T1	111-78	Antenna Coil Complete
T2	110-62	Oscillator Coil Complete
T3	108-82B	Input I.F. Coil—465 kc.
T4	108-83B	Output I.F. Coil—465 kc.
T5	114-74	5" P.M. Speaker
T6	104-62D	Power Transformer
L1	105-35	R.F. "B" Choke
L2	105-19	"A" Choke
L3	105-30C	Filter Choke
Vibrator	126-4	Vibrator
F1	131-79	4 amp. fuse (type 3AG)
S1		On Volume Control

SERVICE NOTES:

Voltage taken from different points of circuit to chassis are measured with volume control full on, all tubes in their sockets and speaker connected, with a volt meter having a resistance of 1000 ohms per volt.

All voltages are to be measured with 6.3 volts input to receiver.

Resistances of coils and transformer windings are indicated in ohms on schematic circuit diagram.

To check for open by-pass condensers, shunt each condenser with another condenser of the same capacity and voltage rating, which is known to be good, until the defective unit is located.

Failure to operate, noisy or weak reception is usually due to defective tubes, the tubes making poor contact with sockets or grid clips making poor contact with the caps of the tubes. Tubes may be checked very easily by replacing with other tubes which are known to be good. If fuse blows out frequently and insulating sleeve has been properly placed over fuse, the trouble is probably in the vibrator, it should be replaced. Do not attempt to make any adjustments on the vibrators.

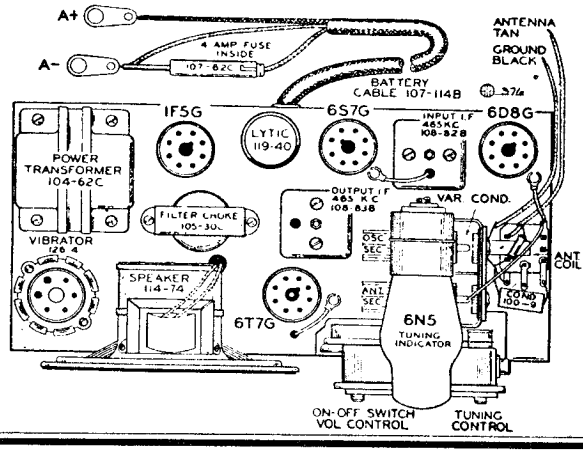

Excessive hum, stuttering, low volume and a reduction in all D. C. voltages is usually caused by a shorted electrolytic condenser; open by-pass condensers, frequently cause oscillation and distorted tone.

ALIGNING I.F. TRANSFORMERS: (465 K.C.):

Part No. 108-83B Output I.F. Transformer

Part No. 108-82B Input I.F. Transformer

These I.F. transformers have two adjustments, both of which are accessible from the top of chassis (see Fig. 1).

1. With volume control full on (the extreme right of its rotation), and with the variable condenser set to approximately 1400 kilocycles, make the following adjustments:

   (a) Connect external oscillator set at 465 kilocycles, in series with .1 mfd. condenser, to the control grid cap of the type 6S7G tube, and adjust the output I.F. transformer (No. 108-83B) to resonance.

   (b) Move oscillator output clip from grid of 6S7G to grid of 6A8G and adjust input I.F. transformer (No. 108-82B) to resonance.

   (c) With oscillator still connected to 6A8G, readjust output I.F. transformer (108-83B) if necessary.

R.F. ALIGNMENT: (535-1720 K.C.)

1. With gang condenser in its minimum capacity position, plates entirely out of mesh, connect an external oscillator in series with a 200 mmf. condenser to the antenna lead and chassis ground and make the following adjustments:

   (a) With external oscillator set at 1720 kilocycles, adjust oscillator trimmer to resonance. This adjustment is on the top of rear section of variable gang condenser. (See Fig. 1).

   (b) Re-set external oscillator to 1400 kilocycles, rotate condenser, pick up oscillator signal and adjust antenna trimmer to resonance. (Top of front section of gang condenser).

   (c) Check sensitivity at 600 and 1000 kilocycles.

©John F. Rider, Publisher

MODEL 62-346
Schematic, Voltage
Socket, Trimmer
Alignment, Parts

MONTGOMERY-WARD & CO.

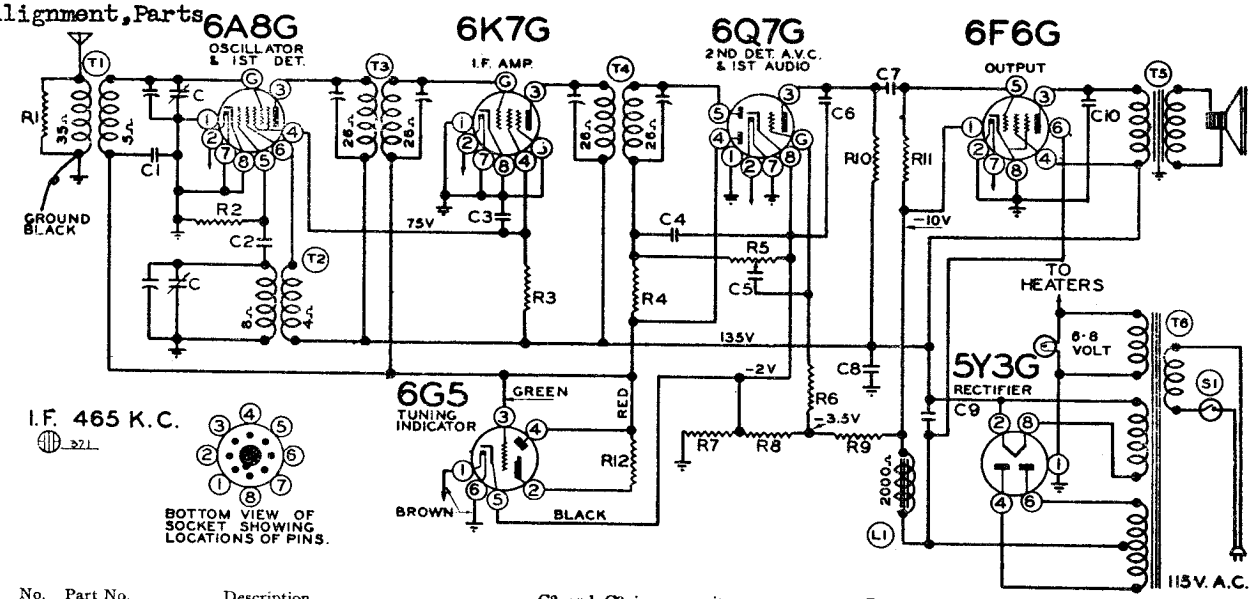

No.	Part No.	Description
		CONDENSERS
C	102-49	2 Gang Variable
C1	100-9	.05 x 200 v. 25%
C2	129-12	.00025 Mica 20%
C3	100-1	.1 x 400 v. —50 —10%
C4	129-5	.0001 Mica 20%
C5	100-11	.01 x 400 v. 25%
C6	129-2	.0005 Mica 20%
C7	100-11	.01 x 400 v. 25%
C8	119-38	5.0 x 200 wv. lytic
C9	119-38	5.0 x 250 wv. lytic
C10	100-19	.006 x 600 v. 25%

C8 and C9 in one unit

		RESISTORS
R1	130-17	10M ohm — 1/3 w. 20%
R2	130-12	50M ohm — 1/3 w. 20%
R3	130-149	15M ohm — 1/3 w. 20%
R4	130-170	3 megohm — 1/3 w. 25%
R5	101-77	1 megohm volume control
R6	130-170	3 megohm — 1/3 w. 25%
R7	106-35	65 ohm
R8	106-35	45 ohm
R9	106-35	220 ohm
R10	130-9	200M ohm — 1/3 w. 20%
R11	130-118	600M ohm — 1/3 w. 20%
R12		250M ohm Resistor (in Cathode-Ray Eye Socket)

R7, R8 and R9 in one unit.

		PARTS
T1	111-58B	Antenna Coil Complete
T2	110-46	Oscillator Coil Complete
T3	108-82B	Input I.F. Complete
T4	108-83B	Output I. F. Complete
T5	114-72	5" Dynamic Speaker
T6	104-100	Power Transformer
L1		Speaker Field (2000 ohm)
S1		Switch on Volume Control

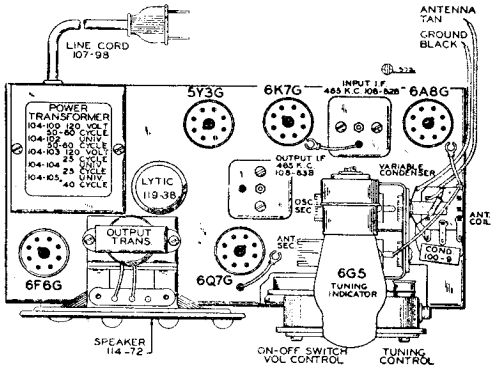

ALIGNING INSTRUCTIONS;

CAUTION:—No aligning adjustments should be attempted without first thoroughly checking over all other possible causes of trouble, such as poor installations, open or grounded antenna systems, low line voltages, defective tubes, condensers and resistors. In order to properly align this chassis, an oscillator (generator) is absolutely necessary. No aligning adjustments should be attempted with the chassis in the cabinet. Remove the knobs and the four bolts which are used to fasten the chassis.

All adjustments should be made with a non-metallic screwdriver.

RESONANCE INDICATOR:

Use as a resonance indicator an output meter connected across the primary of the speaker input transformer, or by means of an adapter between the plate and screen terminals of the type 6F6G output tube. Maximum deflection of the meter indicates resonance. Use only enough signal to get a readily readable output. A low range output meter or the low scale of a multi-range meter should be used.

SERVICE NOTES:

Voltages taken from different points of circuit to chassis are measured with volume control full on, all tubes in their sockets and speaker connected, with a volt meter having a resistance of 1000 ohms per volt.

All voltages as indicated on diagram are measured with 115 volts on the primary of the power transformer.

Resistances of coil windings are indicated in ohms on the schematic circuit diagram.

To check for open by-pass condensers, shunt each condenser with another condenser of the same capacity and voltage rating, which is known to be good, until the defective unit is located.

Excessive hum, stuttering, low volume and a reduction in all D.C. voltages is usually caused by a shorted electrolytic condenser; open by-pass condensers frequently cause oscillation and distorted tone.

ALIGNING I.F. TRANSFORMERS: (465 K.C.):

Part No. 108-83B Output I.F. Transformer
Part No. 108-82B Input I.F. Transformer

These I.F. transformers have two adjustments, both of which are accessible from the top of chassis (see Fig. 1).

1. With volume control full on (the extreme right of its rotation), and with the variable condenser set to approximately 1400 kilocycles, make the following adjustments:
   (a) Connect external oscillator set at 465 kilocycles, in series with .1 mfd. condenser, to the control grid cap of the type 6K7G tube, and adjust the output I.F. transformer (No. 108-83B) to resonance.
   (b) Move oscillator output clip from grid of 6K7G to grid of 6A8G and adjust input I.F. transformer (No. 108-82B) to resonance.
   (c) With oscillator still connected to 6A8G, readjust output I.F. transformer (108-83B) if necessary.

R.F. ALIGNMENT: (535-1720. K.C.)

1. With gang condenser in its minimum capacity position, plates entirely out of mesh, connect an external oscillator in series with a 200 mmf. condenser to the antenna lead and chassis ground and make the following adjustments:
   (a) With external oscillator set at 1720 kilocycles, adjust oscillator trimmer to resonance. This adjustment is on the top of rear section of variable gang condenser. (See Fig. 1).
   (b) Re-set external oscillator to 1400 kilocycles, rotate condenser, pick up oscillator signal and adjust antenna trimmer to resonance. (Top of front section of gang condenser).
   (c) Check sensitivity at 600 and 1000 kilocycles.

©John F. Rider, Publisher

MONTGOMERY-WARD & CO.

MODELS 62-350, 62-351, 62-352
Schematic, Voltage, Parts
Socket, Trimmer, Alignment

FOR TUNER DATA SEE INDEX

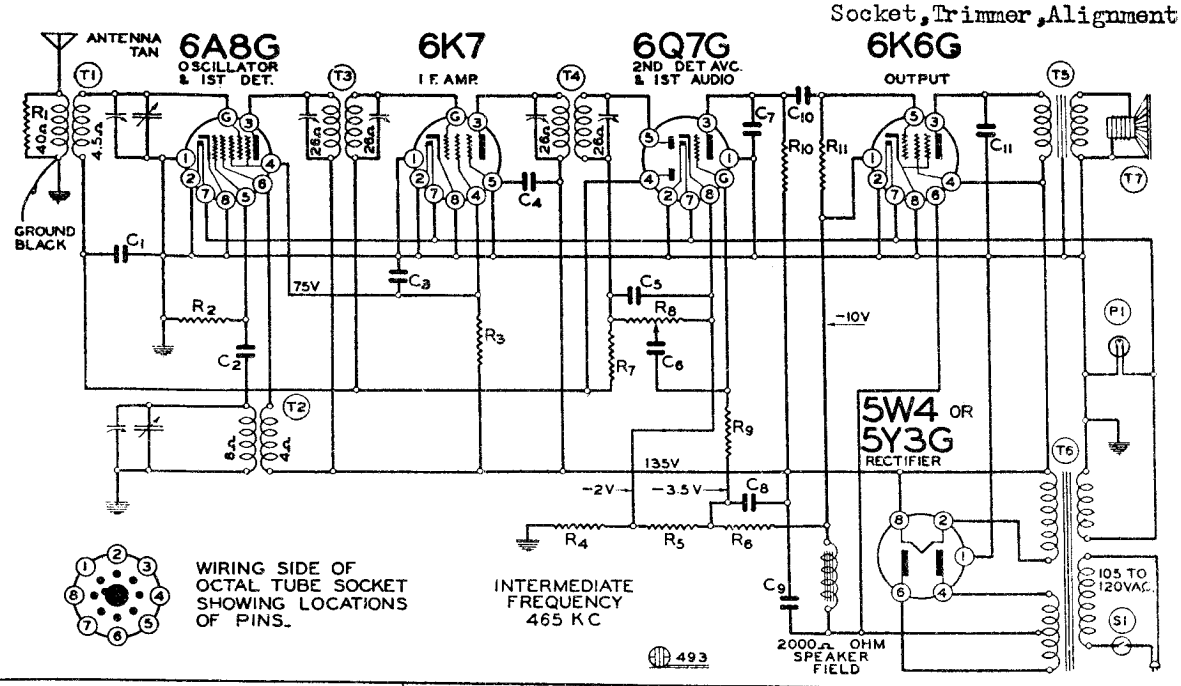

WIRING SIDE OF OCTAL TUBE SOCKET SHOWING LOCATIONS OF PINS.

INTERMEDIATE FREQUENCY 465 KC

LIST OF REPAIR PARTS (SERIAL No. 961600 and UP)

Use Only Genuine Factory Replacement Parts

Bin No.	Part No.	schematic reference	Description	No. Used in set	Selling price each
			CONDENSERS		
10979	BE100-1	C3	.1x400 volt Tubular	1	.10
11387	BE100-9	C1	.05x200 volt Tubular	1	.10
11256	BE100-11	C6,C10	.01x400 volt Tubular	2	.09
	BE100-13	C4	.05x400 volt Tubular	1	.10
	BE100-19	C11	.006x600 volt Tubular	1	.09
	BE119-47C	C8,C9	Dual 5 Mfd x 250 w. v. Filter Condenser	1	.70
10930	BE129-2	C7	.0005 Mica Type 20%	1	.09
11335	BE129-5	C5	.0001 Mica Type 20%	1	.09
10928	BE129-12	C2	.00025 Mica Type 20%	1	.10
			RESISTORS		
	BE106-35	R4,R5,R6	65 Ohm, 45 Ohm, 220 Ohm Metal Clad Strip	1	.20
11097	BE130-9	R10	200M Ohm-1/3 watt-20% Carbon	1	.08
11068	BE130-12	R2	50M Ohm-1/3 watt-20% Carbon	1	.08
	BE130-21	R1	20M Ohm-1/3 watt-20% Carbon	1	.08
	BE130-118	R11	600M Ohm-1/3 watt-20% Carbon	1	.08
11094	BE130-149	R3	15M Ohm-1/3 watt-20% Carbon	1	.08
11090	BE130-170	R7,R9	3 Megohm-1/3 watt-20% Carbon	2	.08
			COILS		
	BE108-82E	T3	Input I.F. Coil Assembly Complete with can	1	.60
	BE108-83E	T4	Output I.F. Coil Assembly Complete with can	1	.60
	BE110-73	T2	Oscillator Coil Assembly Complete	1	.30
	BE111-92	T1	Antenna Coil Assembly Complete	1	.40
			SOCKETS		
	BE121-93		Eight Prong Octal Socket for 6K6	1	.10
	BE121-93		Eight Prong Octal Socket for 6Q7	1	.10
	BE121-93		Eight Prong Octal Socket for 6K7	1	.10
	BE121-93		Eight Prong Octal Socket for 6A8	1	.10
	BE121-93		Eight Prong Octal Socket for 5Y3 or 5W4	1	.10
			TRANSFORMERS		
	BE104-100E	T6	Power Transformer 50/60 Cycle 105-120 volt	1	1.50
	BE104-108E		Power Transformer 25 cycle 105-120 volt		
	BE104-104E		Universal Transformer 25 cycle primary		
	BE104-99E		Universal Transformer 40 cycle primary		
			MISCELLANEOUS		
	BE101-106	R8,S1	Volume Control and Switch (1 megohm)	1	.50
	BE102-67	C	Two Gang Variable Condenser	1	2.00
	BE105-55B	T5	Output Transformer for Speaker	1	.50
			SPEAKER		
	BE114-108A & B	T7	Five inch Dynamic (2000 ohm field)	1	2.00
	BE105-55B	T5	Output Transformer for Speaker	1	.50

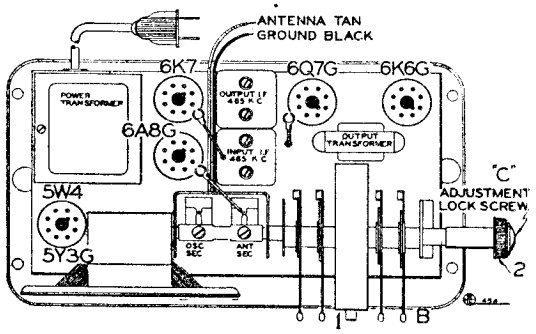

SERVICE NOTES:

Voltages taken from different points of circuit to chassis are measured with volume control full on, all tubes in their sockets and speaker connected, with a volt meter having a resistance of 1000 ohms per volt.

All voltages as indicated on diagram are measured with 115 volts on the primary of the power transformer.

Resistances of coil windings are indicated in ohms on the schematic circuit diagram.

To check for open by-pass condensers, shunt each condenser with another condenser of the same capacity and voltage rating, which is known to be good, until the defective unit is located.

Excessive hum, stuttering, low volume and a reduction in all D.C. voltages is usually caused by a shorted electrolytic condenser; open by-pass condensers frequently cause oscillation and distorted tone.

ALIGNING I.F. TRANSFORMERS: (465 K.C.):

Part No. 108-83E Output I.F. Transformer
Part No. 108-82E Input I.F. Transformer

These I.F. transformers have two adjustments, both of which are accessible from the top of chassis (see Fig. 1).

1. With volume control full on (the extreme right of its rotation), and with the variable condenser set to approximately 1400 kilocycles, make the following adjustments:
   (a) Connect external oscillator set at 465 kilocycles, in series with .1 mfd. condenser, to the control grid cap of the type 6K7 tube, and adjust the output I. F. transformer (No. 108-83E) to resonance.
   (b) Move oscillator output clip from grid of 6K7 to grid of 6A8G and adjust input I.F. transformer (No. 108-82E) to resonance.
   (c) With oscillator still connected to 6A8G, readjust output I.F. transformer (108-83E) if necessary.

R.F. ALIGNMENT: (535-1720 K.C.)

1. With gang condenser in its minimum capacity position, plates entirely out of mesh, connect an external oscillator in series with a 200 mmf. condenser to the antenna lead and chassis ground and make the following adjustments:
   (a) With external oscillator set at 1720 kilocycles, adjust oscillator trimmer to resonance. This adjustment is on the top of rear section of variable gang condenser. (See Fig. 1).
   (b) Re-set external oscillator to 1400 kilocycles, rotate condenser, pick up oscillator signal and adjust antenna trimmer to resonance. (Top of front section of gang condenser).
   (c) Check sensitivity at 600 and 1000 kilocycles.

©John F. Rider, Publisher

MODEL 62-361, Issue A
Schematic, Socket, Parts
Trimmer, Voltage

MONTGOMERY-WARD & CO.

FOR TUNER AND ALIGNMENT DATA, SEE INDEX

BAND	DIAL SCALE	FREQUENCY RANGE
Broadcast	Lower	535 to 1720 K. C. (Kilocycles)
Short Wave	Upper	2000 to 7000 K. C. (Kilocycles)

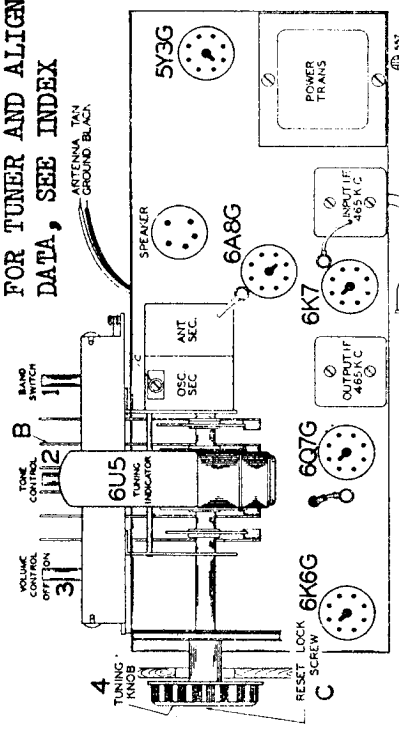

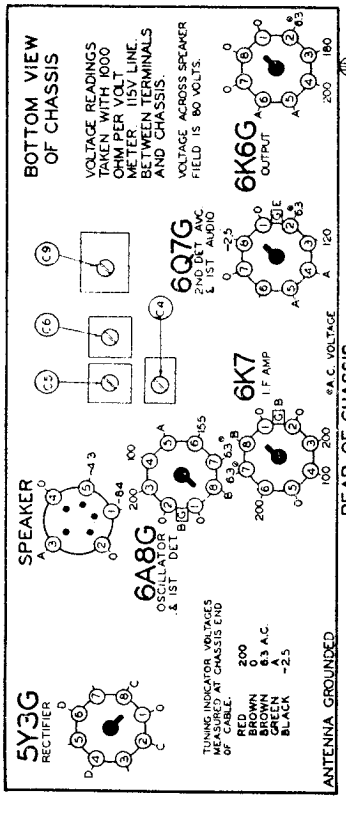

A-CANNOT BE MEASURED WITH VOLTMETER.
B-BIAS OF -2.5V READ ACROSS R8.
C-6.3V A.C. READ ACROSS TERMINALS 2 & 8.
D-560V A.C. READ ACROSS TERMINALS 4 & 6.
E-BIAS OF -1.8V READ ACROSS R9.

FIG. 3

• IF PEAK 465KC

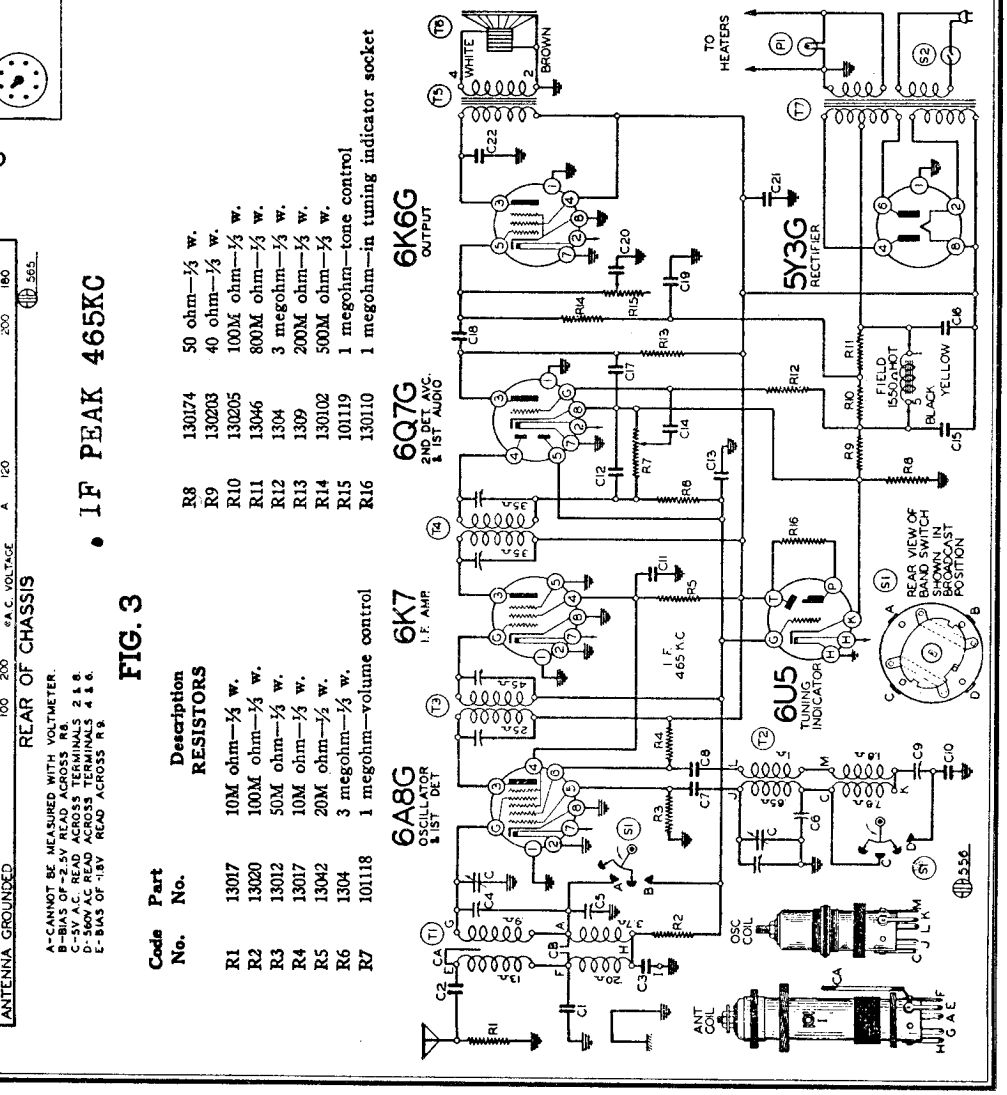

Code No.	Part No.	Description
		RESISTORS
R1	13017	10M ohm—½ w.
R2	13020	100M ohm—½ w.
R3	13012	50M ohm—½ w.
R4	13017	10M ohm—½ w.
R5	13042	20M ohm—½ w.
R6	1304	3 megohm—½ w.
R7	101118	1 megohm—volume control
R8	130174	50 ohm—½ w.
R9	130203	40 ohm—½ w.
R10	130205	100M ohm—½ w.
R11	13046	800M ohm—½ w.
R12	1304	3 megohm—½ w.
R13	1309	200M ohm—½ w.
R14	130102	500M ohm—½ w.
R15	101119	1 megohm—tone control
R16	130110	1 megohm—in tuning indicator socket

CONDENSERS

	CA and CB	Coupling Capacities
C	10273	2 gang variable condenser
C1	12986	.000038 mica
C2	12987	.000105 mica
C3	10027	.00304 x 600 v.
C4	12439D	2-25 mmf. adjustable condenser
C5	12453	2-10 mmf. dual adjustable condenser
C6	12453	Dual adjustable condenser—2-10 mmf.
C7	1295	.0001 mica
C8	10012	.003 x 600 v.
C9	12444	450 mmf. working capacity series pad
C10	129107	.0016—compression type
C11	10053	.25 x 400 v.
C12	1295	.0001 mica
C13	1009	.05 x 200 v.
C14	10011	.01 x 400 v.
C15	11948	8. mfd.—350 w. v. lytic
C16	11948	4. mfd.—350 w. v. lytic
C17	1292	.0005 mica
C18	10016	.01 x 400 v.
C19	1004	.1 x 200 v.
C20	10071	.004 x 600 v.
C21	10013	.05 x 400 v.
C22	10019	.006 x 600 v.
C3 and C6 in same unit		C15 and C16 in same unit

PARTS

T1	11189	Antenna Coils Complete
T2	11071	Oscillator Coils Complete
T3	108105G	Input I. F.—465 kc. Complete
T4	108106D	Output I. F.—465 kc. Complete
T5	10557	Output Transformer
T6	11411-0	6" Dynamic Speaker
T7	104124B	Power Transformer
S1	12553	Wave Band Switch
S2		Off-on Switch on Volume Control
P1	10794	6-8 v. Pilot Light

©John F. Rider, Publisher

© John F. Rider, Publisher

MONTGOMERY-WARD & CO.

MODEL 62-361, Issue B
Schematic, Socket, Parts Trimmer, Voltage

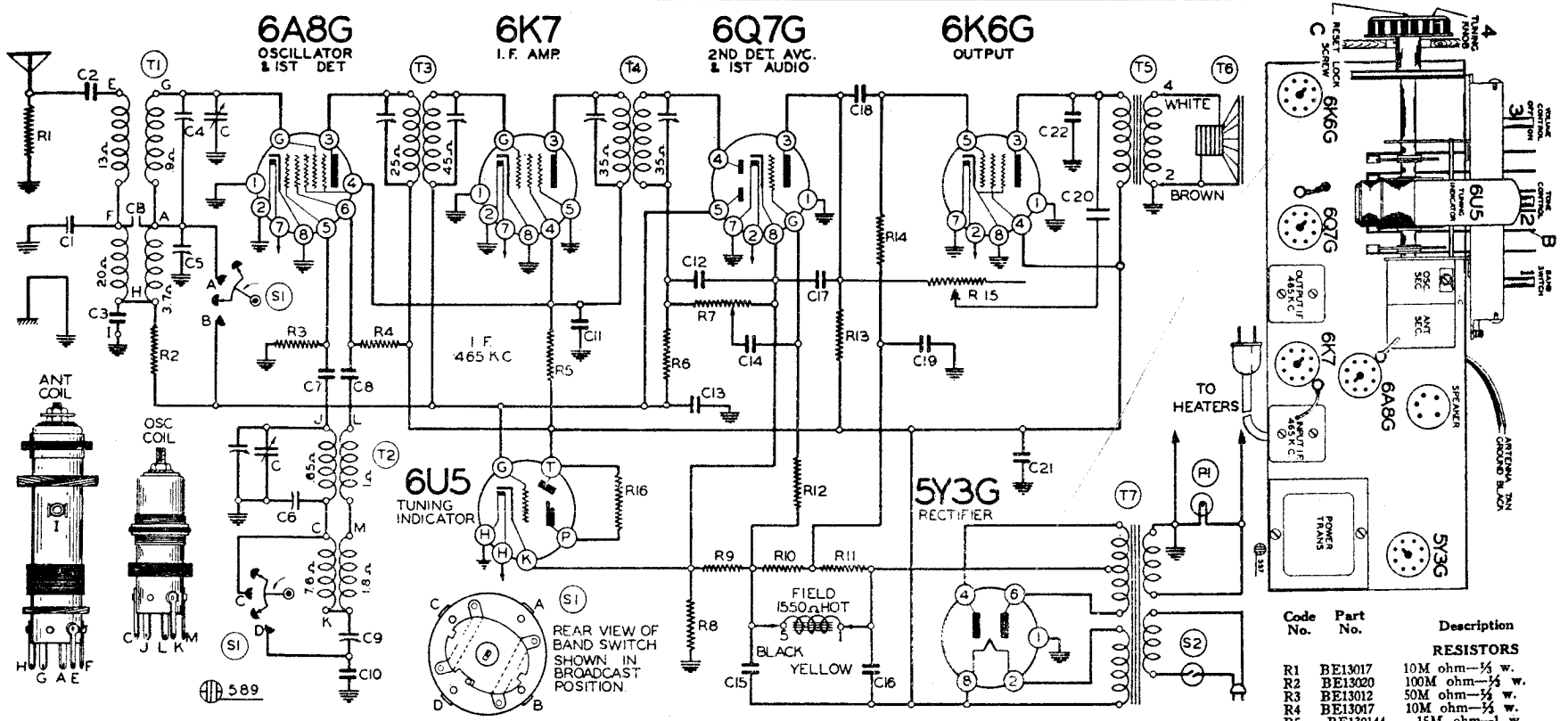

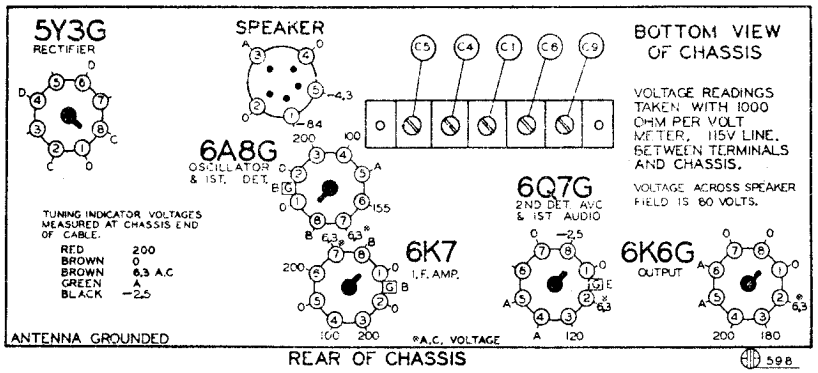

A-CANNOT BE MEASURED WITH VOLTMETER.
B-BIAS OF −2.5V READ ACROSS R8.
C-5V A.C. READ ACROSS TERMINALS 2 & 8.
D-560V A.C READ ACROSS TERMINALS 4 & 6.
E-BIAS OF −1.8V READ ACROSS R9.

FOR TUNER, SEE INDEX

FIG. 3

Code No.	Part No.	Description
		RESISTORS
R1	BE13017	10M ohm—½ w.
R2	BE13020	100M ohm—½ w.
R3	BE13012	50M ohm—½ w.
R4	BE13017	10M ohm—½ w.
R5	BE130144	15M ohm—1 w.
R6	BE1304	3 megohm—½ w.
R7	BE101118	1 megohm—volume control
R8	BE130174	50 ohm—½ w.
R9	BE130203	40 ohm—½ w.
R10	BE130205	100M ohm—½ w.
R11	BE13046	800M ohm—½ w.
R12	BE1304	3 megohm—½ w.
R13	BE1309	200M ohm—½ w.
R14	BE130102	500M ohm—½ w.
R15	BE101119	1 megohm—tone control
R16	BE130110	1 megohm—in tuning indicator socket

Code No.	Part No.	Description
		CONDENSERS
C	BE10273	2 gang variable condenser
C1	BE12456	Adjustable trimmer 3-35 mmf.
C2	BE12987	.000105 mica
C3	BE10077	.00304 x 600 v.
C4	BE12456	2-15 mmf. adjustable condenser
C5	BE12456	2-15 mmf. adjustable condenser
C6	BE12456	2-15 mmf. adjustable condenser
C7	BE1295	.001 mica
C8	BE10012	.003 x 600 v.
C9	BE12456	450 mmf. working capacity series pad
C10	BE129107	.0016—compression type
C11	BE10053	.25 x 400 v.
C12	BE1295	.0001 mica
C13	BE1009	.05 x 200 v.
C14	BE10011	.01 x 400 v.
C15	BE11948	8. mfd.—350 w. v. lytic
C16	BE11948	4. mfd.—350 w. v. ltyic
C17	BE1292	.0005 mica
C18	BE10016	.01 x 400 v.
C19	BE1004	.1 x 200 v.
C20	BE1292	.0005 Mica
C21	BE10013	.05 x 400 v.
C22	BE10092	.001 x 600 v.

C1, C4, C5, C6 and C9 in same unit.
C15 and C16 in same unit.

		PARTS
T1	BE11189	Antenna Coils Complete
T2	BE11071	Oscillator Coils Complete
T3	BE108105G	Input I. F.—465 kc. Complete
T4	BE108106D	Output I. F.—465 kc. Complete
T5	BE10557	Output Transformer
T6	BE114110	6" Dynamic Speaker
T7	BE104124B	Power Transformer
S1	BE12553	Wave Band Switch
S2		Off-on Switch on Volume Control
P1	BE10794	6-8 v. Pilot Light

MODEL 62-361
Issues A and B
Alignment, Notes

MONTGOMERY-WARD & CO.

ALIGNMENT PROCEDURE ISSUE A

- Volume control—Maximum all adjustments.
- Connect radio chassis to ground post of signal generator with a short heavy lead.
- Connect dummy antenna value in series with generator output lead.
- Connect output meter across primary of output transformer.
- Allow chassis and signal generator to "heat up" for several minutes.

The following equipment is required for aligning:

- An all wave signal generator which will provide an accurately calibrated signal at the test frequencies as listed.
- Output indicating meter.
- Non-metallic screwdriver.
- Dummy antennas—.1 mf., 200 mmf., and 400 ohms.

BAND	SIGNAL GENERATOR Frequency Setting	Dummy Antenna	Connection to Radio	Position of Band Switch	Variable Condenser Setting	Trimmers Adjusted (in Order Shown)	Trimmer Function	Adjustment
I. F.	465 Kc.	.1 MFD.	Grid of 6K7	Broadcast (Extreme left rotation)	Rotor full open (Plates out of mesh)	Two trimmers on top (See Fig. 1)	Output I. F.	Adjust to maximum output
	465 Kc.	.1 MFD.	Grid of 6A8	Broadcast (Extreme left rotation)	Rotor full open (Plates out of mesh)	Two trimmers on top (See Fig. 1)	Input I. F.	Adjust to maximum output
SHORT WAVE BAND	6 Mc.	400 ohms	Antenna lead	Short Wave (Extreme right rotation)	Set dial at 6 MC	Trimmer (C) Top of front section of gang	Short wave oscillator	Adjust to maximum output
	6 Mc.	400 ohms	Antenna lead	Short Wave (Extreme right rotation)	Dial set at 6 MC	Trimmer (C 4) (See Fig. 3)	Short wave Antenna	Adjust to maximum output
BROAD-CAST BAND	1720 Kc.	200 mmf.	Antenna lead	Broadcast (Extreme left rotation)	Rotor full open (Plates out of mesh)	Trimmer (C 6) (See Fig. 3)	Broadcast Oscillator	Adjust to maximum output
	1400 Kc.	200 mmf.	Antenna lead	Broadcast (Extreme left rotation)	Set dial at 1400 Kc.	Trimmer (C 5) (See Fig. 3)	Broadcast Antenna	Adjust to maximum output
	600 Kc.	200 mmf.	Antenna lead	Broadcast (Extreme left rotation)	Set dial at 600 Kc.	Trimmer (C 9) (See Fig. 3)	Broadcast oscillator series pad	Adjust to maximum rock dial. (See note "A")
IMAGE REJECTION ADJUST-MENTS	1890 Kc.	200 mmf.	Antenna lead	Broadcast (Extreme left rotation)	Pick up signal at 960 Kc. on dial	Wire Capacitor (CB) (See circuit diagram)	Image rejection	Adjust by twisting for minimum output. (See note "B")
	2630 Kc.	200 mmf.	Antenna lead	Broadcast (Extreme left rotation)	Pick up signal at 1700 Kc. on dial	Wire capacitor (CA) (See circuit diagram)	Image rejection	Adjust by moving for minimum output. (See note "C")

NOTE "A" Turn the dial back and forth slightly (rock) and adjust trimmer until the peak of greatest intensity is obtained.

NOTE "B" 960KC is the image frequency of 1890KC. Adjust wire capacity (CB) by twisting the two wires until a **minimum** output is obtained.

NOTE "C" 1700KC is the image frequency of 2630KC. Adjust wire capacity (CA) by moving the wire either toward or away from the antenna coil winding until a **minimum** output is obtained on the output meter.

Attenuate the signal from the signal generator to prevent the leveling off action of the AVC.
After each range is completed, repeat the procedure as a final check.

BAND SWITCH	BAND	FREQUENCY RANGE
Extreme Right Rotation	Short Wave	2000 to 7000 KC (2-7MC)
Extreme Left Rotation	Broadcast	535 to 1720 KC.

Power Consumption.....50 Watts (At 115 volts 50-60 cycles)
Power Output.....1.2 Watts Undistorted, 2.5 Watts Maximum
Intermediate Frequency.....465 KC.

DESCRIPTION:

TUBES:

The tube complement of this chassis consists of the following octal base glass and metal tubes:

The type and function of each tube is as follows:

1—Type 6A8G Pentagrid Mixer, First Detector-oscillator.
1—Type 6K7 Remote Cut-Off Pentode, I. F. Amplifier (465 K. C.)
1—Type 6Q7G Duplex Diode Triode Second Detector, A. V. C. and First Audio.
1—Type 6K6G Pentode Output Amplifier.
1—Type 5Y3G High Vacuum Rectifier.
1—Type 6U5 Cathode-Ray Tuning Eye.

Transformers are available and chassis are sometimes equipped with universal transformers for operation on 25, 40 and 60 cycles and with primary taps for 110, 130, and 230 volts, (see parts list).

SERVICE NOTES:

Voltages taken from different points of circuit to chassis are measured with volume control full on, all tubes in their sockets and speaker connected, with a volt meter having a resistance of 1000 ohms per volt.

All voltages as indicated on the voltage chart are measured with 115 volts on the primary of the power transformer.

Resistances of coil windings are indicated in ohms on the schematic circuit diagram.

To check for open by-pass condensers, shunt each condenser with another condenser of the same capacity and voltage rating, which is known to be good, until the defective unit is located.

Excessive hum, stuttering, low volume and a reduction in all D. C. voltages is usually caused by a shorted electrolytic condenser; open by-pass condensers frequently cause oscillation and distorted tone.

ALIGNING INSTRUCTIONS:

CAUTION:—No aligning adjustments should be attempted without first thoroughly checking over all other possible causes of trouble, such as poor installations, open or grounded antenna systems, low line voltages, defective tubes, condensers and resistors. In order to properly align this chassis, an oscillator (generator) is absolutely necessary. No aligning adjustments should be attempted with the chassis in the cabinet.

To remove the chassis from the cabinet, remove the four bolts which are used to fasten the chassis to the cabinet bottom, pull the knobs off their shafts and pull off the six button lever keys on front of dial.

To remove the chassis from the cabinet, remove the four bolts which are used to fasten the chassis to the cabinet bottom; remove the special locking screw in the center of the tuning knob on the side of the cabinet; pull the knobs off their shafts and pull off the six button lever keys on front of dial.

ALIGNMENT PROCEDURE ISSUE B

- Volume control—Maximum all adjustments.
- Connect radio chassis to ground post of signal generator with a short heavy lead.
- Connect dummy antenna value in series with generator output lead.
- Connect output meter across primary of output transformer.
- Allow chassis and signal generator to "heat up" for several minutes.

The following equipment is required for aligning:

- An all wave signal generator which will provide an accurately calibrated signal at the test frequencies as listed.
- Output indicating meter.
- Non-metallic screwdriver.
- Dummy antennas—.1 mf., 200 mmf., and 400 ohms.

BAND	SIGNAL GENERATOR Frequency Setting	Dummy Antenna	Connection to Radio	Position of Band Switch	Variable Condenser Setting	Trimmers Adjusted (in Order Shown)	Trimmer Function	Adjustment
I. F.	465 Kc.	.1 MFD.	Grid of 6K7	Broadcast (Extreme left rotation)	Rotor full open (Plates out of mesh)	Two trimmers on top (See Fig. 1)	Output I. F.	Adjust to maximum output
	465 Kc.	.1 MFD.	Grid of 6A8	Broadcast (Extreme left rotation)	Rotor full open (Plates out of mesh)	Two trimmers on top (See Fig. 1)	Input I. F.	Adjust to maximum output
SHORT WAVE BAND	7 Mc.	400 ohms	Antenna lead	Short Wave (Extreme right rotation)	Rotor full open (Plates out of mesh)	Trimmer (C) Top of front section of gang	Short wave oscillator	Adjust to maximum output
	6 Mc.	400 ohms	Antenna lead	Short Wave (Extreme right rotation)	Dial set at 6 MC	Trimmer (C 4) (See Fig. 3)	Short wave Antenna	Adjust to maximum output
BROAD-CAST BAND	1720 Kc.	200 mmf.	Antenna lead	Broadcast (Extreme left rotation)	Rotor full open (Plates out of mesh)	Trimmer (C 6) (See Fig. 3)	Broadcast Oscillator	Adjust to maximum output
	1400 Kc.	200 mmf.	Antenna lead	Broadcast (Extreme left rotation)	Set dial at 1400 Kc.	Trimmer (C 5) (See Fig. 3)	Broadcast Antenna	Adjust to maximum output
	600 Kc.	200 mmf.	Antenna lead	Broadcast (Extreme left rotation)	Set dial at 600 Kc.	Trimmer (C 9) (See Fig. 3)	Broadcast oscillator series pad	Adjust to maximum rock dial. (See note "A")
IMAGE REJECTION ADJUST-MENT	2330 Kc.	200 mmf.	Antenna lead	Broadcast (Extreme left rotation)	Pick up signal at 1400 Kc. on dial	Trimmer (C 1) (See Fig. 3)	Image rejection	Adjust for minimum mum output. (See note "B")

NOTE "A" Turn the dial back and forth slightly (rock) and adjust trimmer until the peak of greatest intensity is obtained.

NOTE "B" 2330KC is the image frequency of 1400KC. Adjust Trimmer C1 until a **minimum** output is obtained.

Attenuate the signal from the signal generator to prevent the leveling-off action of the AVC.
After each range is completed, repeat the procedure as a final check.

BAND SWITCH	BAND	FREQUENCY RANGE
Extreme Right Rotation	Short Wave	2000 to 7000 KC (2-7MC)
Extreme Left Rotation	Broadcast	535 to 1720 KC.

Power Consumption.....50 Watts (At 115 volts 50-60 cycles)
Power Output.....1.2 Watts Undistorted, 2.5 Watts Maximum
Intermediate Frequency.....465 KC.

©John F. Rider, Publisher

MONTGOMERY-WARD & CO.

MODEL 62-362
Schematic, Voltage
Socket, Trimmer, Parts

Schematic Reference	Part No.	Description
RESISTORS		
R1	BE13017	10M ohm—½ w.
R2	BE13020	100M ohm—½ w.
R3	BE13012	50M ohm—½ w.
R4	BE13017	10M ohm—½ w.
R5	BE13042	20M ohm—½ w.
R6	BE1304	3 megohm—½ w.
R7	BE101118	1 megohm—volume control
R8	BE130230	170 ohm—½ w.
R9	BE130205	100M ohm—½ w.
R10	BE13046	800M ohm—½ w.
R11	BE130225	15 megohm—½ w.
R12	BE1309	200M ohm—½ w.
R13	BE130102	500M ohm—½ w.
R14	BE101119	1 megohm—tone control
R15	BE130110	1 megohm—in tuning indicator socket
CONDENSERS		
C	BE10273	2 gang variable condenser
C1	BE12455	3-35 mmf. adj. cond.
C2	BE12987	.000105 mica
C3	BE10077	.00304 x 600 v.
C4	BE12439D	2-25 mm. adj. cond.
C5	BE12453	1.5-10 mmf. dual adjustable condenser
C6	BE12453	Dual adjustable cond.—1.5-10 mmf.
C7	BE295	.0001 mica
C8	BE10012	.003 x 600 v.
C9	BE12444	450 mmf. working capacity series pad
C10	BE129107	.0016—compression type
C11	BE10053	.25 x 400 v.
C12	BE12939	.00005 mica
C13	BE1009	.05 x 200 v.
C14	BE10071	.004 x 600 v.
C15	BE11948	8. mfd. - 350 w.v. lytic
C16	BE11948	4. mfd. - 350 w.v. lytic
C17	BE1292	.0005 mica
C18	BE10016	.01 x 400 v.
C19	BE1004	.1 x 200 v.
C20	BE10071	.004 x 600 v.
C21	BE10013	.05 x 400 v.
C22	BE10019	.006 x 600 v.
C23	BE10048	.25 x 200 v.
	BECB	Coupling capacity C15 and C16 in same unit
		C5 and C6 in same unit
PARTS		
T1	BE11189B	Antenna coils complete
T2	BE1071	Oscillator coils complete
T3	BE108105G	Input I. F.—465 kc. complete
T4	BE108106D	Output I. F.—465 kc. complete
T5	BE10574	Output Transformer
T6	BE14124	8" Dynamic speaker
T7	BE104124B	Power Transformer
S1	BE12553	Wave Band Switch
S2		Off-on switch on volume control
P1	BE10794	6-8 v. pilot light
S3	BE12341	Radio-phone switch

©John F. Rider, Publisher

MODEL 62-362
Alignment

MONTGOMERY-WARD & CO.

MODELS 62-363, 62-463, 62-650
Trimmer, Alignment

ALIGNMENT PROCEDURE MODEL 62-362

- Volume control—Maximum all adjustments.
- Connect radio chassis to ground post of signal generator with a short heavy lead.
- Connect dummy antenna value in series with generator output lead.
- Connect output meter across primary of output transformer.
- Allow chassis and signal generator to "heat up" for several minutes.

The following equipment is required for aligning:

- An all wave signal generator which will provide an accurately calibrated signal at the test frequencies as listed.
- Output indicating meter.
- Non-metallic screwdriver.
- Dummy antennas—.1 mf., 200 mmf., and 400 ohms.

BAND	SIGNAL GENERATOR Frequency Setting	Dummy Antenna	Connection to Radio	Position of Band Switch	Variable Condenser Setting	Trimmers Adjusted (In Order Shown)	Trimmer Function	Adjustment
I. F.	465 Kc.	.1 MFD.	Grid of 6K7	Broadcast (Extreme left rotation)	Rotor full open (Plates out of mesh)	Two trimmers on top (See Fig. 1)	Output I. F.	Adjust to maximum output
	465 Kc.	.1 MFD.	Grid of 6A8	Broadcast (Extreme left rotation)	Rotor full open (Plates out of mesh)	Two trimmers on top (See Fig. 1)	Input I. F.	Adjust to maximum output
SHORT WAVE BAND	6 Mc.	400 ohms	Antenna lead	Short Wave (Extreme right rotation)	Set dial at 6 MC	Trimmer (C) Top of front section of gang	Short wave oscillator	Adjust to maximum output
	6 Mc.	400 ohms	Antenna lead	Short Wave (Extreme right rotation)	Dial set at 6 MC	Trimmer (C 4) (See Fig. 3)	Short wave Antenna	Adjust to maximum output
BROADCAST BAND	1720 Kc.	200 mmf.	Antenna lead	Broadcast (Extreme left rotation)	Rotor full open (Plates out of mesh)	Trimmer (C 6) (See Fig. 3)	Broadcast Oscillator	Adjust to maximum output
	1400 Kc.	200 mmf.	Antenna lead	Broadcast (Extreme left rotation)	Set dial at 1400 Kc.	Trimmer (C 5) (See Fig. 3)	Broadcast Antenna	Adjust to maximum output
	600 Kc.	200 mmf.	Antenna lead	Broadcast (Extreme left rotation)	Set dial at 600 Kc.	Trimmer (C 9) (See Fig. 3)	Broadcast oscillator series pad	Adjust to maximum rock dial. (See note "A")
IMAGE REJECTION ADJUSTMENT	2330 Kc.	200 mmf.	Antenna lead	Broadcast (Extreme left rotation)	Pick up signal at 1400 Kc. on dial	Trimmer (C 1) (See Fig. 3)	Image rejection	Adjust for minimum mum output. (See note "B")

NOTE "A" Turn the dial back and forth slightly (rock) and adjust trimmer until the peak of greatest intensity is obtained.

NOTE "B" 2330KC is the image frequency of 1400KC. Adjust Trimmer C1 until a minimum output is obtained.

Attenuate the signal from the signal generator to prevent the leveling-off action of the AVC. After each range is completed, repeat the procedure as a final check.

BAND SWITCH	BAND	FREQUENCY RANGE
Extreme Right Rotation	Short Wave	2000 to 7000 KC (2-7MC)
Extreme Left Rotation	Broadcast	535 to 1720 KC.

Power Consumption ..... 60 Watts (At 115 volts 50-60 cycles)
Power Output ..... 1.2 Watts Undistorted, 2.5 Watts Maximum
Intermediate Frequency ..... 465 KC.

Transformers are available and chassis are sometimes equipped with universal transformers for operation on 25, 40 and 60 cycles and with primary taps for 110, 130, and 230 volts, (see parts list).

To check for open by-pass condensers, shunt each condenser with another condenser of the same capacity and voltage rating, which is known to be good, until the defective unit is located.

Excessive hum, stuttering, low volume and a reduction in all D. C. voltages is usually caused by a shorted electrolytic condenser; open by-pass condensers frequently cause oscillation and distorted tone.

Voltages taken from different points of circuit to chassis are measured with volume control full on, all tubes in their sockets and speaker connected, with a volt meter having a resistance of 1000 ohms per volt.

All voltages as indicated on the voltage chart are measured with 115 volts on the primary of the power transformer.

Resistances of coil windings are indicated in ohms on the schematic circuit diagram.

Model 62-363
" 62-463
" 62-650

ALIGNMENT PROCEDURE

Volume Control—Maximum All Adjustments.

Connect Radio Chassis to Ground Post of Signal Generator with a Short Heavy Lead.

Allow Chassis and Signal Generator to "Heat Up" for several minutes.

The following equipment is required for aligning:
An All Wave Signal Generator which will provide an accurately calibrated signal at the test frequencies as listed.
Output Indicating Meter—Non-Metallic Screwdriver.
Dummy Antennas—.1 mf., 200 mmf., and 400 ohms.

SIGNAL GENERATOR FREQUENCY SETTING	SIGNAL GENERATOR CONNECTION AT RADIO	DUMMY ANTENNA	BAND SWITCH	CONDENSER SETTING	ADJUST TRIMMERS TO MAXIMUM
I. F.					
456 KC	Grid of 1st Det.	.1 mf.	B Range	Turn Rotor to Full Open	1st I.F. (C15) & (C16) 2nd I.F. (C21) & (C22)
RANGE B					
1730 KC	Antenna Lead	200 mmf.	B Range	Turn Rotor to Full Open	Oscillator Range B (C7)
1500 KC	Antenna Lead	200 mmf.	B Range	Turn Rotor to Max. Output Set Indicator to 1500 KC— See Note A	Ant. Range B (C5)
600 KC	Antenna Lead	200 mmf.	B Range	Turn Rotor to Max. Output	600 KC (C8) Rock Rotor—See Note B
RANGE D					
18,300 KC	Antenna Lead	400 Ohm	D Range	Turn Rotor to Full Open	Oscillator Range D (C6)
15,000 KC	Antenna Lead	400 Ohm	D Range	Turn Rotor to Max. Output	Ant. Range D (C3) Rock Rotor—See Note B
PERMEABILITY TUNING UNIT			BUTTON DEPRESSED (Band Switch in Push Button Position)	TURN SETTING SCREW TO MAXIMUM OUTPUT —See Instruction Book	ADJUST COIL POSITION TO MAXIMUM OUTPUT —See Note C
1100 KC	Antenna Lead	200 mmf.	No. 1	Setting Screw No. 1	Antenna Coil No. 1
1100 KC	Antenna Lead	200 mmf.	No. 2	Setting Screw No. 2	Antenna Coil No. 2
850 KC	Antenna Lead	200 mmf.	No. 3	Setting Screw No. 3	Antenna Coil No. 3
850 KC	Antenna Lead	200 mmf.	No. 4	Setting Screw No. 4	Antenna Coil No. 4
700 KC	Antenna Lead	200 mmf.	No. 5	Setting Screw No. 5	Antenna Coil No. 5
700 KC	Antenna Lead	200 mmf.	No. 6	Setting Screw No. 6	Antenna Coil No. 6

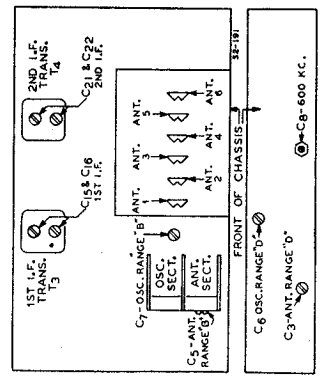

Attenuate the signal from the signal generator to prevent the leveling-off action of the AVC.

After each range is completed, repeat the procedure as a final check.

NOTE A—If the pointer is not at 1500 KC on the dial, loosen the 2 clamps which hold the pointer assembly on the cord, move the pointer to the 1500 KC mark, and tighten the clamps.

NOTE B—Turn the rotor back and forth and adjust the trimmer until the peak of greatest intensity is obtained.

NOTE C—At the top of the permeability tuning unit can be seen six "W" openings. Insert the end of a pair of long nose pliers or a screwdriver in the "W" opening of the proper button and adjust the position of the antenna (rear) coil by twisting the pliers or screwdriver until maximum output is obtained.

CAUTION—When aligning the short wave band be sure NOT to adjust at the image frequency. This can be checked as follows: Let us say the signal generator is set for 15,000 KC. The signal will then be heard at 15,000 on the dial of the radio. The image signal, which is much weaker, will be heard at 15,000 less 912 KC, or 14,088 KC on the dial. It may be necessary to increase the input signal to hear the image.

To remove the chassis from the cabinet, remove the four bolts which are used to fasten the chassis to the cabinet bottom; pull the knobs off their shafts and pull off the six button lever keys on front of dial.

CAUTION:—No aligning adjustments should be attempted without first thoroughly checking over all other possible causes of trouble, such as poor installations, open or grounded antenna systems, low line voltages, defective tubes, condensers and resistors. In order to properly align this chassis, an oscillator (generator) is absolutely necessary. No aligning adjustments should be attempted with the chassis in the cabinet.

©John F. Rider, Publisher

©John F. Rider, Publisher

MODEL 62-362

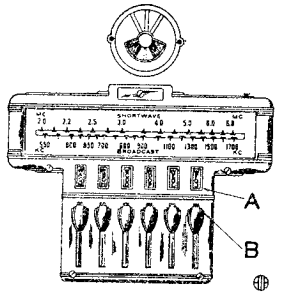

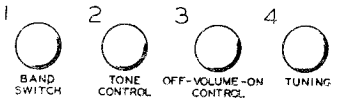

FIG. 2—FRONT VIEW

PROCEDURE FOR SETTING THE AUTOMATIC LEVERS:

There are six levers on the dial by means of which six stations may be selected, (See "B", Fig. 2).

Press down any one of the six Automatic levers. Holding it down, tune in by means of tuning knob No. 4 any one of your favorite stations. Turn the tuning knob very slowly back and forth noting the width of the shadow indicated on the screen of the cathode-ray tuning eye. Minimum width indicates the ideal tuning position (resonance). The station will then be accurately tuned in.

Release this lever and press down any other lever. Hold this lever down and tune in by means of knob No. 4 another favorite station.

Follow this procedure until stations have been set on all the levers.

Rotate the tuning knob (No. 4) to the right (clockwise) as far as it will turn. Now remove from the right side of the cabinet the metal button, and, with a screw driver inserted through the hole, tighten the reset locking adjustment screw "C", (see Fig. 1). It is VERY IMPORTANT that this locking screw is turned until it is ABSOLUTELY TIGHT.

This screw will lock in place all the stations you have selected on the levers. (Note: **Reset Lock Screw "C" is loose when radio is shipped from factory).**

If you should desire to change any station you selected to another, loosen the reset locking screw "C" four or five complete turns; select the new station as explained. (Note: If the dial mechanism works hard when setting up a new station for one of the automatic tuner levers, it is due to the locking screw being too tight. Loosen the reset locking screw "C" until the dial mechanism works freely with the tuner lever pressed down).

BE SURE TO RETIGHTEN THE RESET LOCK SCREW, otherwise the stations will not stay adjusted to the levers.

Above each lever an opening in the cabinet is provided for inserting station call letters, (See "A", Fig. 2).

Punch the correct station call letter tabs from the set of sheets supplied and insert them into the rectangular openings in the cabinet above each of the levers. One of the small, clear celluloid tabs supplied should be snapped into place over each of the station call letter tabs.

The Automatic Tuner dial is now set for quick tuning. Press down on the lever and your favorite station is selected.

MODELS 62-390, 62-490 and 62-900

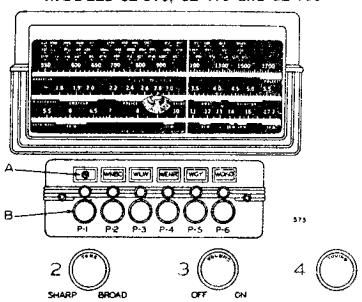

FIG 2—FRONT VIEW

PROCEDURE FOR SETTING THE AUTOMATIC STATION SELECTOR BUTTONS:

There are six buttons on the dial by means of which six standard wave stations may be selected. (See B, Fig. 2).

Make a list of your favorite local stations, those which you tune in regularly. Put down the frequency (kilocycle number) of these stations. There may be 2, 3, 5 or any number up to and including six in this list.

List the station with the lowest kilocycle number first and stations with higher kilocycle numbers in order, the station with the highest kilocycle number last.

The automatic station selector buttons are grouped to cover specific frequency ranges.

The frequency ranges of the buttons starting with the right hand button P1 are as follows:

Button P1—530 K.C. to 800 K.C.
Button P2—530 K.C. to 800 K.C.
Button P3—700 K.C. to 1100 K.C.
Button P4—700 K.C. to 1100 K.C.
Button P5—980 K.C. to 1550 K.C.
Button P6—980 K.C. to 1550 K.C.

This means that any station which has a kilocycle number lying between 530 and 800 K.C. can be set up on either Button P1 or Button P2. Any station which has a kilocycle number lying between 700 and 1100 K.C. can be set on either Button P3 or Button P4. Any station which has a kilocycle number lying between 980 and 1550 K.C. can be set on either Button P5 or Button P6.

A typical station list of stations which may be selected in the vicinity of Chicago, for example, is as follows:

Station	Frequency	Button
WMAQ	670 K.C.	Button P1
WGN	720 K.C.	Button P2
WBBM	770 K.C.	Button P3
WENR	870 K.C.	Button P4
WJJD	1130 K.C.	Button P5
WHFC	1420 K.C.	Button P6

After you have made up your list of stations, turn manual-automatic switch (knob No. 1) to manual position "B" and tune in the first station with the manual tuning knob. Then turn the manual-automatic switch (knob No. 1) to automatic position "A." Push in automatic button P1 and with a small screw driver turn the adjusting screw (see "A" Fig. 2) above the button to the right (clockwise). Turn the screw until the proper station is tuned in. Check by turning the manual-automatic switch to the manual position to make sure you have the same station.

Switch back to automatic position and by means of the screw driver very carefully tune in the station watching the cathode-ray tuning eye to indicate perfect tuning.

Turn the manual-automatic switch (knob No. 1) back to manual position and tune in the second station with the manual tuning knob. Then turn the manual automatic switch to automatic position. Push in button P2 and with a small screw driver turn the adjusting screw above button P2 to the right (clockwise). Turn the screw until the proper station is tuned in..

Check by turning the manual-automatic switch to the manual position to make sure you have the same station. Switch back to automatic position and by means of the screw driver, very carefully tune in the station watching the cathode-ray eye for accurate tuning.

Follow this procedure for each button until you have selected all of your stations. The automatic buttons are now set up for quick tuning and no further adjustment is necessary.

Over the adjustment screw "A" a rectangular opening in the escutcheon has been provided for the station call letter tabs. Punch out the station call letter tabs of the stations you have set up for the automatic buttons from the set of sheets supplied and insert them into the rectangular openings in the escutcheon. One of the small, clear celluloid tabs supplied should be snapped into place over each of the station call letter tabs.

MODEL 62-372

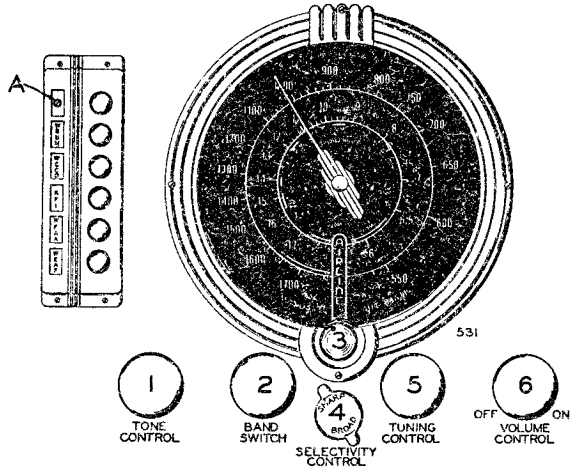

Fig. 2—Front View, Arrangement of Controls

PROCEDURE FOR SETTING THE AUTOMATIC STATION SELECTOR BUTTONS:

There are six buttons on the dial by means of which six standard wave stations may be selected. (See Fig. 2).

Make a list of your favorite local stations, those which you tune in regularly. Put down the frequency (kilocycle number) of these stations. There may be 2, 3, 5 or any number up to and including six in this list.

The automatic station selector buttons are grouped to cover specific frequency ranges.

The frequency ranges of the buttons starting with the top button are as follows:

Top button:—980 K.C. to 1550 K.C.
2nd button:—980 K.C. to 1550 K.C.
3rd button:—700 K.C. to 1100 K.C.
4th button:—700 K.C. to 1100 K.C.
5th button:—530 K.C. to 800 K.C.
Lower button:—530 K.C. to 800 K.C.

This means that any station which has a kilocycle number lying between 980 and 1550 K.C. can be set up on either of the two upper buttons. Any station which has a kilocycle number lying between 700 and 1100 K.C. can be set on either of the two center buttons. Any station which has a kilocycle number lying between 530 and 800 K.C. can be set up on either of the two lower buttons.

A typical station list of stations which may be selected in the vicinity of Chicago, for example is as follows:

Station	Frequency	Button
WHFC	1420 K.C.	Top Button
WJJD	1130 K.C.	2nd Button
WENR	870 K.C.	3rd Button
WBBM	770 K.C.	4th Button
WGN	720 K.C.	5th Button
WMAQ	670 K.C.	Lower Button

After you have made up your list of stations, turn manual-automatic switch (knob No. 3) to manual position and tune in the first station with the manual tuning knob. Then turn the manual-automatic switch (knob No. 3) to automatic position. Push in the top automatic button and with a small screw driver turn the adjusting screw (see "A" Fig. 2) beside the top button to the right (clockwise). Turn the screw until the proper station is tuned in. Check by turning the manual-automatic switch to the manual position to make sure you have the same station.

Switch back to automatic position and by means of the screw driver very carefully tune in the station watching the cathode-ray tuning eye to indicate perfect tuning.

Turn the manual-automatic switch (knob No. 3) back to manual position and tune in the second station with the manual tuning knob. Then turn the manual-automatic switch to automatic position. Push in the 2nd button and with a small screw driver turn the adjusting screw beside the 2nd button to the right (clockwise). Turn the screw until the proper station is tuned in.

Check by turning the manual-automatic switch to the manual position to make sure you have the same station. Switch back to automatic position and by means of the screw driver, very carefully tune in the station watching the cathode-ray eye for accurate tuning.

Follow this procedure for each button until you have selected all of your stations. The automatic buttons are now set up for quick tuning and no further adjustment is necessary.

Over the adjustment screw "A" a rectangular opening in the escutcheon has been provided for the station call letter tabs. Punch out the station call letter tabs of the stations you have set up for the automatic buttons from the set of sheets supplied and insert them into the rectangular openings in the escutcheon. One of the small, clear celluloid tabs supplied should be snapped into place over each of the station call letter tabs.

MODELS 62-363, 62-463, 62-650

MONTGOMERY-WARD & CO.

Schematic, Voltage Socket

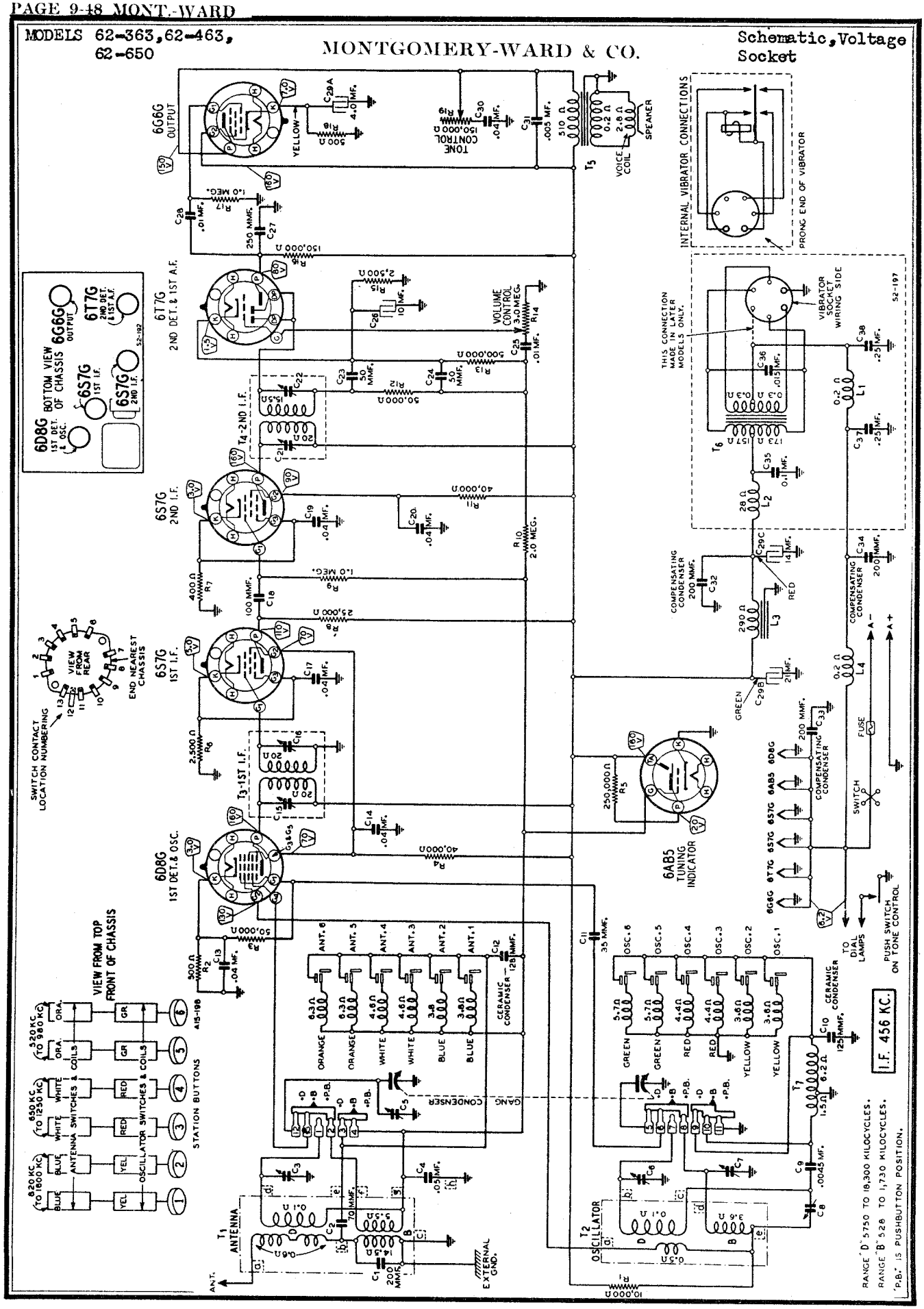

©John F. Rider, Publisher

MONTGOMERY-WARD & CO.

MODEL 62-372
Schematic, Parts
Socket, Voltage

VOLTAGES AT SOCKETS

Line Voltage: 117—Volume Control: Maximum
Readings taken with 1000 Ohm-per-volt meter

Antenna Shorted to Ground
Position of Band Switch: Standard Wave

TUBE	FUNCTION	VOLTAGE BETWEEN SOCKET PRONG AND GROUND (Unless otherwise indicated)							
		Prong No. 1	Prong No. 2	Prong No. 3	Prong No. 4	Prong No. 5	Prong No. 6	Prong No. 7	Prong No. 8
6J7	1st Det.	0	6.2(1)	90	90	5		6.2(1)	5
6K7	I.F.	0	6.2(1)	230	100	2.0		6.2(1)	2.0
6C5	Osc.	0	6.2(1)	140				6.2(1)	0
6Q7	1st Audio & 2nd Det.	0	6.2(1)	100				6.2(1)	0(2)
6F6	Power Amp.	0	6.2(1)	210	230			6.2(1)	0(3)
5Y3G	Rectifier	0	5.0(4)		630(5)		630(5)		5.0(4)
		Plate to Ground		Target to Ground		Cathode to Ground		Across Heater	
6G5	Tuning Indicator	20		230		0		6.2 A.C.	

(1) A.C. voltage as read across heater terminals 2 and 7.
(2) Bias (1.5 volts) as read across resistor R15.
(3) Bias (14 volts) as read across resistors R15 and R16.
(4) A.C. voltage as read across heater terminals 2 and 8.
(5) A.C. voltage as read across terminals 4 and 6.

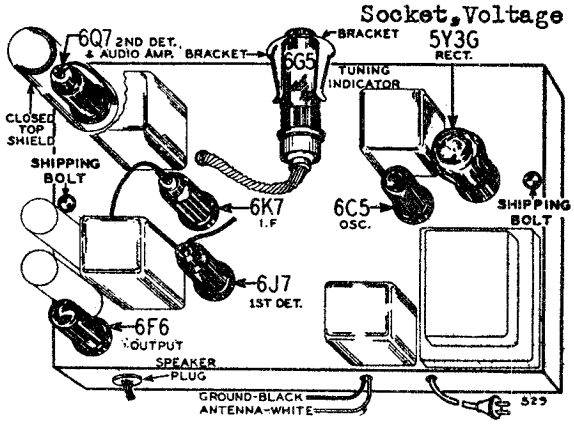

Fig. 1.—Location of Tubes; Top View of Chassis

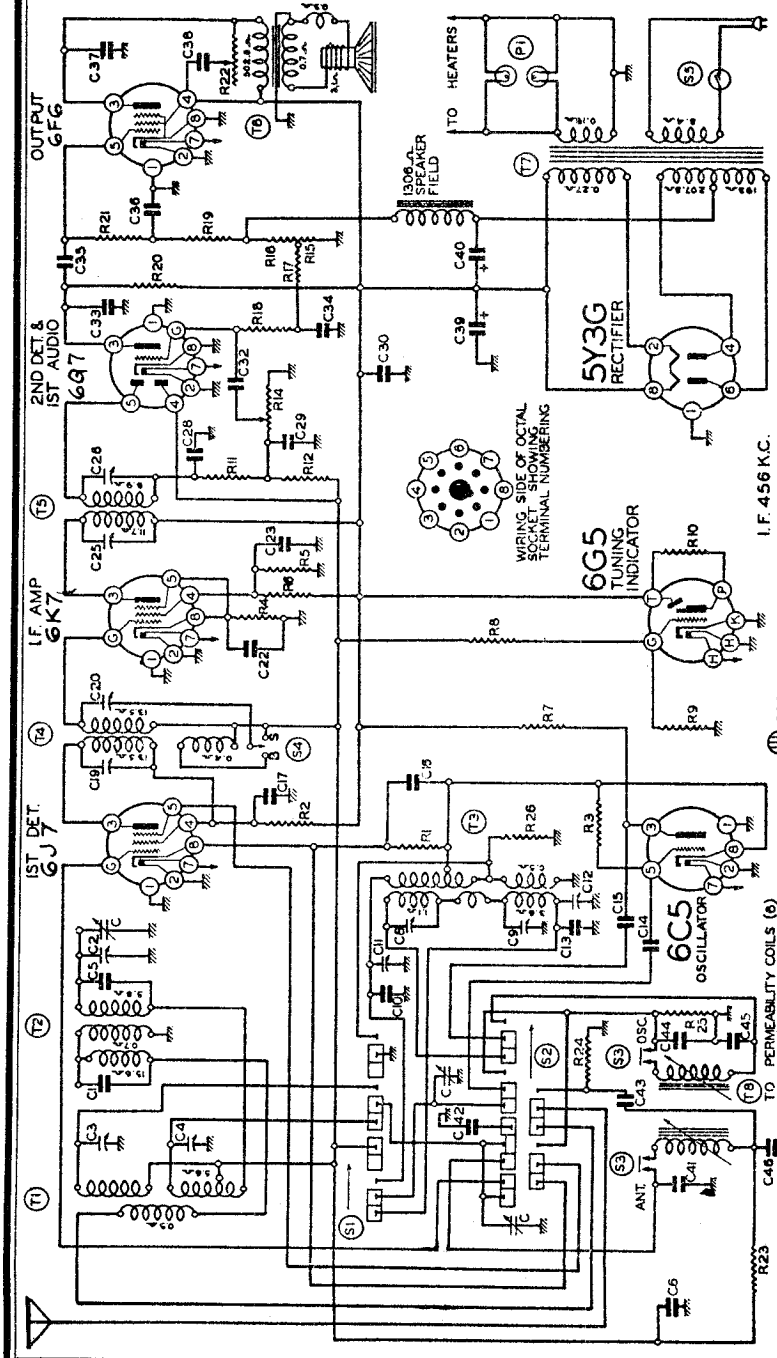

FOR ALIGNMENT SEE INDEX

C40	44x31	12 mfd. 340 v. wet lytic	
C41	129-98	471 mmf. mica condenser - 1%	
C42	100-22	.05 x 200 v. tubular condenser	
C43	100-78	.01 x 200 v. tubular condenser	
C44	129-99	285 mmf. mica condenser - 1%	
C45	129-100	800 mmf. mica condenser - 2-1/2%	
C46	129-71	2000 mmf. mica condenser - 2-1/2%	

PARTS

T1	9A813	Antenna Transformer and can assem.	
T2	9A812	1st antenna coil assembly	
T3	9A814	Oscillator coil and can assembly	
T4	9A815	1st I.F. Transformer and can assem.	
T5	9A816	2nd I.F. Transformer and can assem.	
T6		Output Transformer (See 'Speakers')	
T7	53X144	117 v. 60 cycle power transformer	
T8	110-81	1550 to 960 kc. antenna and oscillator permeability coils	
T9	110-81		
T10	110-82	1110 to 700 kc. antenna and oscillator permeability coils	
T11			
T12	110-83	840 to 530 kc. antenna and oscillator permeability coils	
T13			
S1	2A84	Band change switch	
S2	125-49	Manual to automatic change switch	
S3	125-50	Push button switch for automatic tuner	
S4	2A78	Selectivity Switch	
S5		"On - Off" Switch	
7A32	P1	6-8 v. bayonet type pilot dial lamp	

FOR TUNER DATA, SEE INDEX

Code Part No.	Description			
	RESISTORS			
R1	A95402	4M ohm - .2 w.	C4	17A78
R2	A94104	100M ohm - .2 w.	C5	47x63
R3	A94104	100M ohm - .2 w.	C6	46x80
R4	A94251	250 ohm - .2 w.	C8	17A35
R5	C94203	20M ohm - 1.0 w.	C9	
R6	C94203	20M ohm - 1.0 w.	C11	17A76
R7	B94203	20M ohm - .5 w.		
R8	A94405	4 megohm - .2 w.	C12	2-25 mmf. - oscillator
R9	A94126	12 megohm - .2 w.	C13	47x63
R10	A95105	1 megohm - .2 w.	C14	47x53
R11	A95503	50M ohm - .2 w.	C15	46x120
R12	A95205	2 megohm - .2 w.	C16	46x187
R14	36x235	500M ohm Volume Control	C17	46x212
One	unit R15	43x76 26 ohm wire wound .25)	C19	15-55 mmf.) 1st I.F. trimmer
R16		239 ohm wire wound 2.0)		
R17	A95504	500M ohm - .2 w.	C20	17A57
R18	A95205	2 megohm - .2 w.	C22	15-55 mmf.)
R19	A95503	50M ohm - .2 w.	C23	.02 x 180 v. tubular
R20	A95154	150M ohm - .2 w.	C25	46x187
R21	A95254	250M ohm - .2 w.		46x202
R22	40x223	150M ohm - tone control	C26	70-150 mmf.) 2nd I.F. Trimmers
R23	130-11	250M ohm - 1/3 w.	C28	17A34
R24	130-1	25M ohm - 1/3 w.	C29	150-250 mmf.)
R25	130-170	3 megohm - 1/3 w.	C30	47x56
R26	130-99	300 ohm - 1/3 w.	C32	47x56
	CONDENSERS		C33	46x147
	14A70	3 gang condenser less Dial and Drive Assembly	C34	47x65
			C35	46x98
			C36	46x202
			C37	45x98
C1	47x69	250 mmf. mica condenser	C38	46x100
C2	17A74	2-25 mmf. 1st antenna	C39	46x108
C3	17A76	2-25 mmf.		44x35

©John F. Rider, Publisher

MODEL 62-372
Trimmers, Alignment
MODELS 62-434, 62-435
Alignment, Tuner

MONTGOMERY-WARD & CO.

MODEL 62-465
Alignment

ALIGNMENT PROCEDURE MODEL 62-372

Volume Control—Maximum All Adjustments.
Selectivity Control—Sharp Position All Adjustments.
Connect Radio Chassis to Ground Post of Signal Generator With a Short Heavy Lead.
Allow Chassis and Signal Generator to "Heat Up" for Several Minutes.

The following equipment is required for aligning:
An All Wave Signal Generator which will provide an accurately calibrated signal at the test frequencies as listed.
Output Indicating Meter; Non-Metallic Screwdriver.
Dummy Antennas — .1 mf., 200 mmf., and 400 ohms.

STEP (Follow Order as Given)	BAND SWITCH SETTING	DUMMY ANTENNA	SIGNAL GENERATOR FREQUENCY SETTING	SIGNAL GENERATOR CONNECTION AT RADIO	TRIMMERS ADJUSTED See Illustration	PROCEDURE INITIAL STEPS	PROCEDURE ADJUSTMENT
I.F.							
2nd I.F.	Range B	.1 mf.	456 KC	Grid of I.F. Tube	2nd I.F. (C25) & (C26)	Turn Rotor to Full Open	Adjust to Maximum Output
1st I.F.	Range B	.1 mf.	456 KC	Grid of 1st Det.	1st I.F. (C19) & (C20)	Turn Rotor to Full Open	Adjust to Maximum Output
Range B							
1750 KC	Range B	200 mmf.	1750 KC	Antenna Lead	Oscillator Range B (C12)	Turn Rotor to Full Open	Adjust to Maximum Output
1400 KC	Range B	200 mmf.	1400 KC	Antenna Lead	1st Ant. Range B (C2) 2nd Ant. Range B (C4)	Turn Rotor to Max. Output Set Indicator to 1400 KC—	Adjust to Maximum Output
600 KC	Range B	200 mmf.	600 KC	Antenna Lead	600 KC (C9)	Turn Rotor to Max. Output	Adjust to Maximum Output Rock Rotor—See Note A
Range D							
16000 KC	Range D	400 ohm	16000 KC	Antenna Lead	Oscillator Range D (C11)	Set Dial to 16 MC	Adjust to Maximum Output
16000 KC	Range D	400 ohm	16000 KC	Antenna Lead	Ant. Range D (C3)	Set Dial to 16 MC	Adjust to Maximum Output Rock Rotor—See Note A
6000 KC	Range D	400 ohm	6000 KC	Antenna Lead	6000 KC (C8)	Turn Rotor to Max. Output	Adjust to Maximum Output Rock Rotor—See Note A

Attenuate the signal from the signal generator to prevent the leveling-off action of the AVC.

After each range is completed, repeat the procedure as a **final check.**

NOTE A—Turn the rotor back and forth and adjust the trimmer until the peak of greatest intensity is obtained.

CAUTION—When aligning the short wave band be sure NOT to adjust at the image frequency. This can be checked as follows: Let us say the signal generator is set for 15,000 KC. The signal will then be heard at 15,000 on the dial of the radio. The image signal, which is much weaker, will be heard at 15,000 less 912 KC, or 14,088 KC on the dial. It may be necessary to increase the input signal to hear the image.

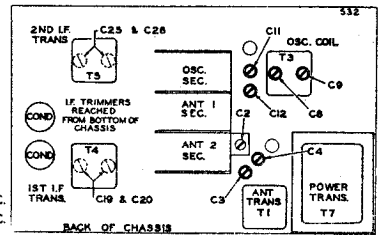

Power Consumption - 67 Watts (At 117 volts 60 cycles)
Power Output - - - - - 2.5 Watts Undistorted
4.5 Watts Maximum
Selectivity - - 28 KC Broad at 1000 times Signal (Sharp)
Intermediate Frequency - - - - - - - 456 KC.

Tuning Frequency Range
B Range ..... 540 to 1750 KC.
D Range ..... 5.8 to 18.1 MC.

R.F. ALIGNMENT: (535-1720 K.C.) (CONT'D.)

1. With gang condenser in its minimum capacity position, plates entirely out of mesh, connect an external oscillator in series with a 200 mmf. condenser to the antenna lead and chassis ground and make the following adjustments:
   (a) With external oscillator set at 1720 kilocycles, adjust oscillator trimmer to resonance. This adjustment is on the top of rear section of variable gang condenser. (See Fig. 1).
   (b) Re-set external oscillator to 1400 kilocycles, rotate condenser, pick up oscillator signal and adjust antenna trimmer to resonance. (Top of front section of gang condenser).
   (c) Check sensitivity at 600 and 1000 kilocycles.

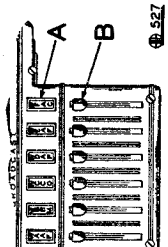

FIG. 2—FRONT VIEW

PROCEDURE FOR SETTING THE AUTOMATIC LEVERS:

There are six levers on the dial by means of which six stations may be selected, (See "B". Fig. 2).

Press down any one of the six levers. Holding it down, tune in by means of tuning knob No. 3 any one of your favorite stations. Turn the tuning knob very slowly back and forth until signal is centered. The station will then be accurately tuned in. Adjust the volume by means of the volume control knob to the desired intensity.

Release this lever and press down any other lever. Hold this lever down and tune in by means of knob No. 3 another favorite station.

Follow this procedure until stations have been set on all the levers.

Rotate the tuning knob (No. 3) to the right (clockwise) as far as it will turn. Now remove from the right side of the cabinet the metal button, and, with a screw driver inserted through the hole, tighten the reset locking adjustment screw (S, see Fig. 1). It is VERY IMPORTANT that this locking screw is turned until it is ABSOLUTELY TIGHT.

This screw will lock in place all the stations you have selected on the levers. (Note: Reset Lock Screw "S" is loose when radio is shipped from factory).

If you should desire to change any station you selected to another, loosen the reset locking screw "S" four or five complete turns; select the new station as explained. (Note: If the dial mechanism works hard when setting up a new station for one of the automatic tuner levers, it is due to the locking screw being too tight. Loosen the reset locking screw "S" until the dial mechanism works freely with the tuner lever pressed down).

BE SURE TO RETIGHTEN THE RESET LOCK SCREW, otherwise the stations will not stay adjusted to the levers.

Above each lever an opening in the cabinet is provided for inserting station call letters, (See "A", Fig. 2).

Punch the correct station call letter tabs from the set of tabs supplied and insert them into the rectangular openings in the cabinet above each of the levers. One of the small, clear celluloid tabs supplied should be snapped into place over each of the station call letter tabs.

MODELS 62-434 AND 62-435

DUMMY ANTENNAS:

The following dummy antennas are used in aligning and are referred to in the following alignment instructions as "Dummy 1", "Dummy 2", and "Dummy 3".

Dummy 1: (I.F.)—Consists of a .1 mfd. condenser connected in series with the external oscillator.

Dummy 2: (Broadcast)—Consists of a 200 mmfd. condenser and a 20 ohm resistor connected in series with each other and in series with the external oscillator.

Dummy 3: (Short Wave)—Consists of a .1 mfd. condenser and a 400 ohm resistor connected in series with each other and in series with the external oscillator.

ALIGNING I. F. TRANSFORMERS: (465 K.C.):

Part No. 108-79C Output I. F. Transformer
Part No. 108-78C Interstage I. F. Transformer
Part No. 108-116 Input I.F. Transformer

These I.F. transformers have two adjustments, both of which are accessible from the top of chassis (see Fig. 1 Top View).

1. With volume control full on, (the extreme right of its rotation), the band changing switch in the broadcast position, (see left of its rotation), and with the variable condenser set to its minimum capacity (plates out of mesh), make the following adjustments:
   (a) Connect external oscillator set at 465 kilocycles, in series with "Dummy 1", to the control grid cap of the type 1D5G 2nd. I.F. Tube and adjust the output I.F. transformer (No. 108-79C) to resonance.
   (b) With "Dummy 1" still connected, move oscillator output clip from grid of 1D5G 2nd. I.F. Tube to grid cap of 1D5G 1st. I.F. Tube and adjust interstage I.F. transformer (No. 108-78C) to resonance.
   (c) Move oscillator to grid cap of 1C7G and adjust input I.F. transformer (No. 108-116).

SHORT WAVE BAND ALIGNMENT:

5.5 to 18.1 Megacycles

1. With band changing switch in the short wave position, extreme right of its rotation, and with external oscillator set to the antenna and ground leads, make the following adjustments:
   (a) Move dial pointer to 17 megacycles and adjust short wave oscillator trimmer to resonance.
   This adjustment is the trimmer mounted on the top of front section of the variable gang condenser (see Fig. 1, top view).
   (b) Adjust short wave antenna trimmer (Adjustment "Z"), to resonance (see Fig. 3, bottom view).

BROADCAST BAND ALIGNMENT:

535 to 1750 Kilocycles

1. With band changing switch in the broadcast position, extreme left of its rotation and with external oscillator connected in series with "Dummy 2" to antenna and ground leads make following adjustments:
   (a) Set external oscillator and dial on radio to 1400 K.C. and adjust broadcast oscillator trimmer to resonance. (Adjustment "Y"), (see bottom view of Chassis Fig. 3). Tune gang condenser slowly back and forth while making this adjustment.
   (b) Reset external oscillator to 600 K.C., and adjust broadcast series pad (adjustment "X") to resonance by rotating condenser to approximately 600 K.C., rocking it slowly to and fro until by adjusting series pad maximum output is attained. This adjustment is located on the front flange of the chassis. (See bottom view of chassis, Fig. 3.)
   (c) Repeat adjustment "a," and "b," until sensitivity is at its maximum, also check to see that radio tunes to 1750 K.C.
   (d) Check for tracking and sensitivity at 1400, 1000, and 600 kilocycles. **Under no circumstances bend plates of variable condenser sections to correct tracking.**

MODEL 62-465
Range — 535 - 1720 Kilocycles

ALIGNING I.F. TRANSFORMERS: (465 K.C.):

Part No. 108-83B Output I.F. Transformer
Part No. 108-82B Input I.F. Transformer

These I.F. transformers have two adjustments, both of which are accessible from the top of chassis (see Fig. 1).

1. With volume control full on (the extreme right of its rotation), and with the variable condenser set to approximately 1400 kilocycles, make the following adjustments:
   (a) Connect external oscillator set at 465 kilocycles, in series with .1 mfd. condenser, to the control grid cap of the type 6S7G tube, and adjust the output I.F. transformer (No. 108-83B) to resonance.
   (b) Move oscillator output clip from grid of 6S7G to grid of 6A8G and adjust input I.F. transformer (No. 108-82B) to resonance.
   (c) With oscillator still connected to 6A8G, readjust output I.F. transformer (108-83B) if necessary.

(CONTINUED)

©John F. Rider, Publisher

©John F. Rider, Publisher

MONTGOMERY-WARD & CO.

MODELS 62-377, 62-387
62-477, 62-487, 62-607
62-617

Schematic, Specifications

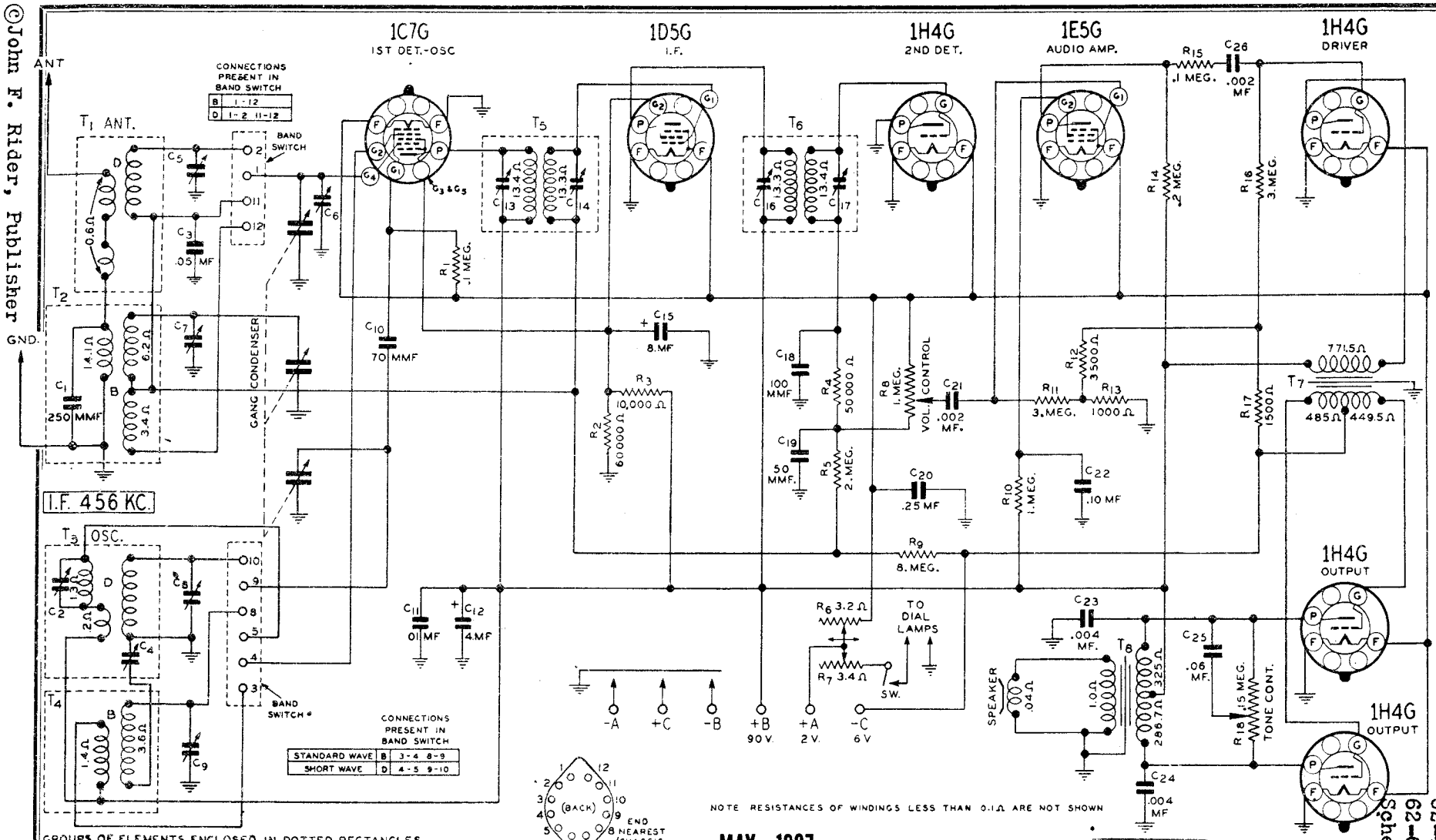

MAY, 1937

Input Voltages and Currents

"A" Battery.....2 Volts—.48 Amperes
"B" Batteries.....90 Volts—13 to 23.0 Ma.
"C" Battery.....6 Volts

Power Output - - - - - 360 Milliwatts Undistorted
725 Milliwatts Maximum

Selectivity - - 35 KC Broad at 1000 times Signal

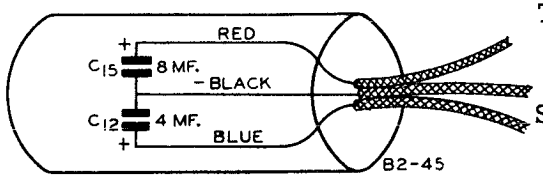

Speaker

6" P.M. Dynamic—Mantel Models
8" P.M. Dynamic—Console Models

Tuning Frequency Range

B Range.....528 to 1730 KC
D Range.....5750 to 18300 KC

Sensitivity

B Range.....13.5 Microvolts Average
D Range.....21.0 Microvolts Average

MODELS 62-377,62-387,62-477 MONTGOMERY-WARD & CO.
62-487,62-607,62-617
Socket,Trimmer,Alignment Coils,Voltage,Dial Drive Data

ALIGNMENT PROCEDURE

Volume Control—Maximum All Adjustments.

Connect Radio Chassis to Ground Post of Signal Generator With a Short Heavy Lead.

Allow Chassis and Signal Generator to "Heat Up" for Several Minutes.

The following equipment is required for aligning:
An All Wave Signal Generator which will provide an accurately calibrated signal at the test frequencies as listed.
Output Indicating Meter; Non-Metallic Screwdriver.
Dummy Antennas — .1 mf., 200 mmf., and 400 ohms.

STEP (Follow Order as Given)	BAND SWITCH SETTING	DUMMY ANTENNA	SIGNAL GENERATOR FREQUENCY SETTING	SIGNAL GENERATOR CONNECTION AT RADIO	TRIMMERS ADJUSTED See Illustration	PROCEDURE INITIAL STEPS	PROCEDURE ADJUSTMENT
I.F.	Range B	.1 mf.	456 KC	Grid of 1st Det.	1st I.F. (C13) & (C14) 2nd I.F. (C16) & (C17)	Turn Rotor to Full Open	Adjust to Maximum Output
RANGE B							
1730 KC	Range B	200 mmf.	1730 KC	Antenna Lead	Oscillator Range B (C9)	Turn Rotor to Full Open	Adjust to Maximum Output
1500 KC	Range B	200 mmf.	1500 KC	Antenna Lead	1st Ant. Range B (C7) 2nd Ant. Range B (C6)	Turn Rotor to Max. Output Set Indicator to 1500 KC—See Note A	Adjust to Maximum Output
600 KC	Range B	200 mmf.	600 KC	Antenna Lead	600 KC (C4)	Turn Rotor to Max. Output	Adjust to Maximum Output Rock Rotor—See Note B
RANGE D							
18300 KC	Range D	400 Ohm	18300 KC	Antenna Lead	Oscillator Range D (C8)	Turn Rotor to Full Open	Adjust to Maximum Output
15000 KC	Range D	400 Ohm	15000 KC	Antenna Lead	Ant. Range D (C5)	Turn Rotor to Max. Output	Adjust to Maximum Output Rock Rotor—See Note B
6000 KC	Range D	400 Ohm	6000 KC	Antenna Lead	6000 KC (C2)	Turn Rotor to Max. Output	Adjust to Maximum Output Rock Rotor—See Note B

Attenuate the signal from the signal generator to prevent the leveling-off action of the AVC.

After each range is completed, repeat the procedure as a final check.

After alignment of Range D has been completed, do not make any adjustments of the Range B trimmers. If this is done, it will be necessary to realign Range D.

NOTE A—In sets using the finger tip tuning dial, remove the retaining ring which holds the dial scale in position. Readjust rotor to maximum output. Hold the station selector ring and turn the dial scale until the pointer is at the 1500 KC mark. Replace the retaining ring.

NOTE B—Turn the rotor back and forth and adjust the trimmer until the peak of greatest intensity is obtained.

CAUTION—When aligning the short wave band be sure NOT to adjust at the image frequency. This can be checked as follows: Let us say the signal generator is set for 15,000 KC. The signal will then be heard at 15,000 on the dial of the radio. The image signal, which is much weaker, will be heard at 15,000 less 912 KC, or 14,088 KC on the dial. It may be necessary to increase the input signal to hear the image.

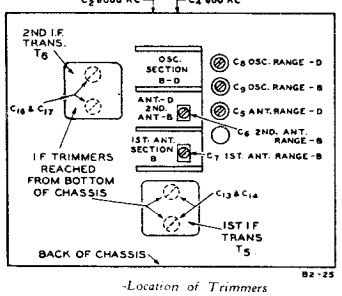

-Location of Trimmers

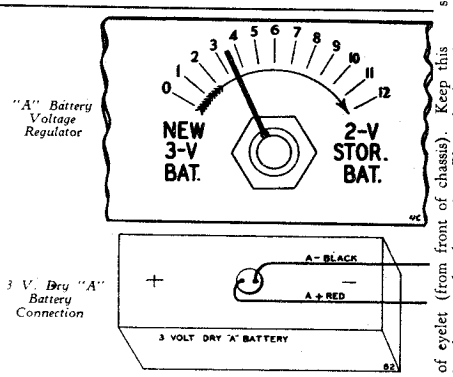

Remove the old drive cord and spring. Rotate the dial until the condenser is completely closed.

Tie both ends of the new drive cord to one end of the spring. The length from the knot to the end of the cord loop should be exactly 12 inches.

Place the loop end of the cord through the hole in the drive drum rim from underneath the drum rim. Be sure that the cord is also placed through the small brass eyelet. Pull the cord through as far as it will go.

Bring the looped cord out and over the finger tip dial ring in such a manner that the loop encircles the drum shaft.

Take one side of the looped cord and make one complete revolution on the drum rim clockwise in back of eyelet (from front of chassis). Keep this cord in place on the drum rim. Place the looped cord over the dial ring so that the cord again encircles the drum shaft. The cord should then be placed over the drive shaft and put on the drive shaft pulley. Then bring the cord up from drive shaft pulley and place it on the drum rim in front of the cord already on. When this is done, hook the free end of the tension spring on the spur provided for it on the drive drum.

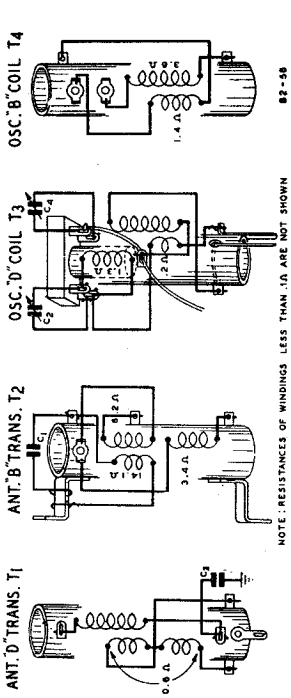

-Coil Terminal Arrangement and D.C. Resistance of Windings

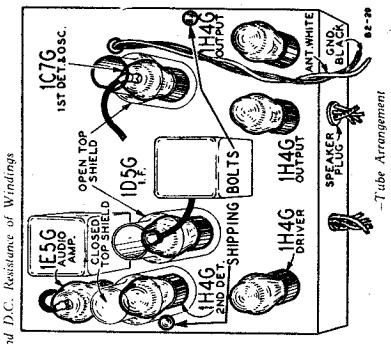

-Tube Arrangement

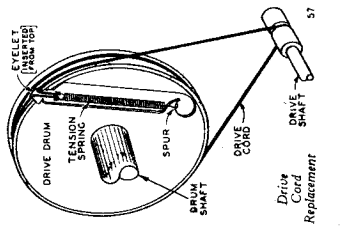

Drive Cord Replacement

VOLTAGES AT SOCKETS

Volume Control: Maximum
Readings taken with 1000 Ohm-per-volt meter.
Antenna Shorted to Ground
Band Switch in Standard Wave Position

TUBE	FUNCTION	VOLTAGE BETWEEN SOCKET PRONG AND GROUND (Unless otherwise indicated) Prong No. 2	Prong No. 3	Prong No. 4	Prong No. 5	Prong No. 6	Prong No. 7	Control Grid Bias
1C7G	1st Det.—Osc.	0	90	66		90	2	
1D5G	I.F.	0	90	66			2	
1H4G	2nd Det.	0	0				2	1.0 Across R13
1E5G	Audio Amp.	0	40(1)	22(1)			2	4.5 Across R12 & 13
1H4G	Driver	0	89				2	6 —C to Ground
1H4G	Output	0	90		6		2	

(1) As read on 1000 volt scale.

©John F. Rider, Publisher

MONTGOMERY-WARD & CO.

MODELS 62-390, 62-490, 62-900
Schematic, Socket, Trimmer Voltage, Parts

Broadcast ..... **Upper Scale** ..... 535 to 1720 KC. (Kilocycles)

Middle Wave ..... **Center Scale** ..... 1.69 to 5.6 MC. (Megacycles)

Short Wave ..... **Lower Scale** ..... 5.5 to 18.0 MC (Megacycles)

S1	BE12555	Band Switch
S2		Hi-Fi Switch on tone control
S3		Off-on switch on volume control
P1	BE10794	Two 6-8 v. Pilot Lights

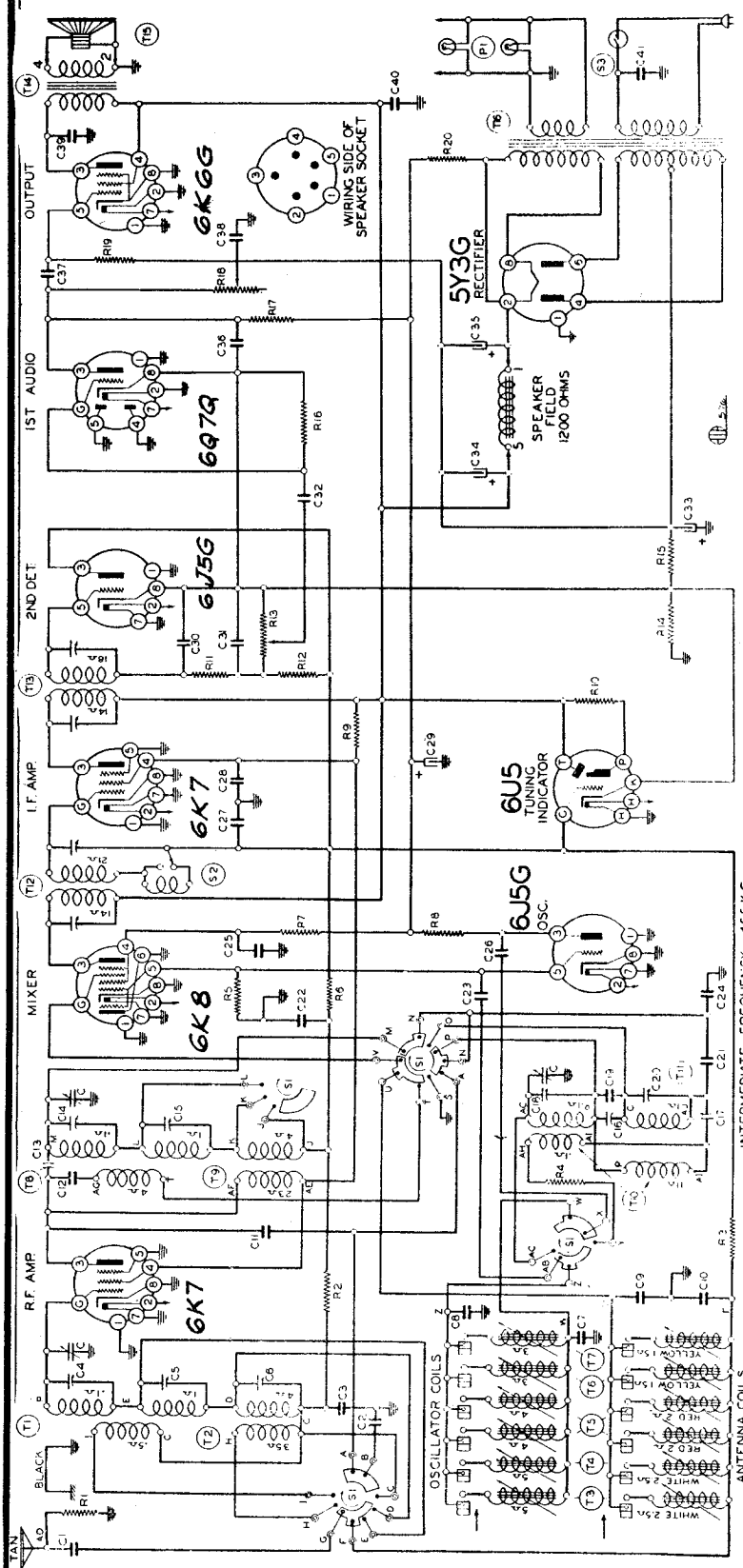

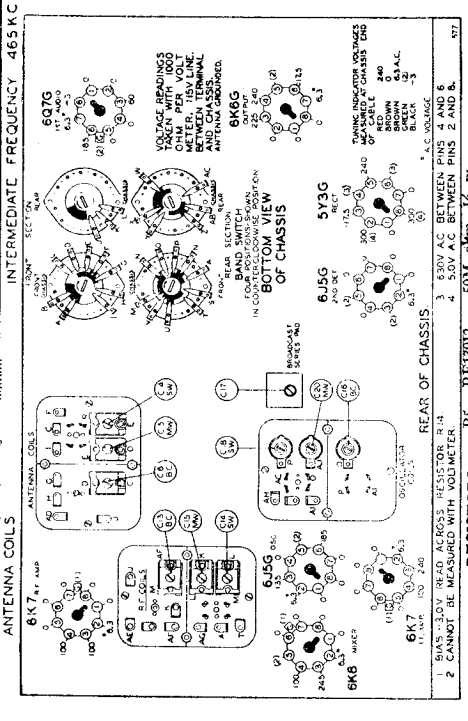

R1	BE13012	50M ohm—½ w.	
R2	BE1304	3 megohm—½ w.	
R3	BE101122	½ megohm volume control	
R4	BE130174	50 ohm—½ w.	
R5	BE130227	250 ohm—1 watt	
R6	BE130225	15 megohm—½ w.	
R7	BE130172	250M ohm—½ w.	
R8	BE101123	300M ohm tone control	
R9	BE130102	500M ohm—½ w.	
R10	BE13095	12M ohm—1.2 watt	
		CONDENSERS	
C	BE10276	3 gang variable condenser	
C1	BE10025	.002 x 600 v.	
C2	BE10026	.02 x 400 v.	
C3	BE129103	.005 mica	
C4		SW, Antenna Adj. Trimmer	
C5		MW, Antenna Adj. Trimmer	
C6		BC, Antenna Adj. Trimmer	
C7	BE129100	.0008 mica	
C8	BE129110	.000307 mica	
C9	BE129111	.000484 mica	
C10	BE12971	.002 mica	
C11	BE12936	.0003 mica	
C12	BE12938	.00005 mica	
C13		BC, R.F. Adj. Trimmer	
C14		SW, R.F. Adj. Trimmer	
C15		MW, R.F. Adj. Trimmer	
C16		BC, Osc. Adj. Trimmer	
C17	BE12435	BC, Series pad Range 500-900 mmfd.	
C18		SW, Osc. Adj. Trimmer	
C19	BE12981	.00001 ceramicon	
C20		MW, Osc. Adj. Trimmer	
C21	BE129108	.00372 Compression type mica	
C22	BE10090	.02 x 400 v.	
C23	BE12962	.00003 mica	
C24	BE129109	.00205 compression type mica	
C25	BE10074	.1 x 400 v.	
C26	BE10025	.002 x 600 v.	
C27	BE10026	.02 x 400 v.	
C28	BE10053	.25 x 400 v.	
C29	BE11961	12 mfd. 350 w. v. lytic	
C30	BE12935	.0001 mica	
C31	BE12938	.00005 mica	
C32	BE10071	.004 x 600 v.	
C33	BE11960	40 mfd.—25 w. v.	
C34	BE11960	10 mfd.—350 w. v.	
C35	BE11960	16 mfd.—400 w. v.	
C36	BE12921	.0002 mica	
C37	BE10076	.02 x 400 v.	
C38	BE10019	.006 x 600 v.	
C39	BE10025	.002 x 600 v.	
C40	BE10074	.1 x 400 v.	
C41	BE10061	.02 x 600 v.—Bakelite C33, C34 and C35 in same unit.	
		PARTS	
T1	BE111104	SW, MW.—Antenna Coil	
T2	BE111103	BC, Antenna Coil	
T3	BE11083B	P. B. Tuner—L. F. Coil	
T4	BE11083	P. B. Tuner—L. F. Coil	
T5	BE11082	P. B. Tuner—M. F. Coil	
T6	BE11081	P. B. Tuner—H. F. Coil	
T7	BE11081B	P. B. Tuner—H. F. Coil	
T8	BE10944	SW—MW—R. F. Coil	
T9	BE10943	BC—R. F. Coil	
T10	BE11086	SW—MW—Oscillator Coil	
T11	BE11087	BC—Osc. Coil	
T12	BE108118	Input I. F. Coil	
T13	BE108119	Output I. F. Coil	
T14	BE10573	Output Transformer	
T15	BE14121	6" Speaker	
T15	BE14122	6" Dynamic Speaker	
T16	BE10439	Power Transformer	

FOR TUNER, SEE INDEX

		RESISTORS	
R1	BE130176	20M ohm—½ w.	
R2	BE13020	100M ohm—½ w.	
R3	BE130176	20M ohm—½ w.	
R4	BE13082	10M ohm—½ w.	
R5	BE130228	15M ohm—1.2 w.	
R6	BE13012	50M ohm—½ w.	
R7	BE13020	100M ohm—½ w.	
R8	BE13082	10M ohm—½ w.	
R9	BE130228	15M ohm—1.2 w.	
R10	BE130110	1 megohm—1/10 watt in tuning indicator socket	

©John F. Rider, Publisher

MODELS 62-390, 62-490, 62-900 Alignment
MODELS 62-401, 62-1100 Trimmers, Alignment

MONTGOMERY-WARD & CO.

Transformers are available and chassis are sometimes equipped with universal transformers for operation on 25, 40 and 60 cycles and with primary taps for 110, 130, and 230 volts, (see parts list).

Voltages taken from different points of circuit to chassis are measured with volume control full on, all tubes in their sockets and speaker connected. with a volt meter having a resistance of 1000 ohms per volt.

To check for open by-pass condensers, shunt each condenser with another condenser of the same capacity and voltage rating, which is known to be good, until the defective unit is located.

Excessive hum, stuttering, low volume and a reduction in all D. C. voltages is usually caused by a shorted electrolytic condenser; open by-pass condensers frequently cause oscillation and distorted tone.

MODELS 62-390, 62-490 and 62-900

NOTE:—On the back of the string dial drum a calibrated scale is provided for aligning this chassis to the frequencies listed in the alignment procedure. Attach a pointer so that it will indicate proper dial setting in respect to the position of the variable condenser.

ALIGNMENT PROCEDURE

- Tone control—in sharp position.
- Volume control—Maximum all adjustments.
- Connect radio chassis to ground post of signal generator with a short heavy lead.
- Connect dummy antenna value in series with generator output lead.
- Connect output meter across primary of output transformer.
- Allow chassis and signal generator to "heat up" for several minutes.

The following equipment is required for aligning:

- An all wave signal generator which will provide an accurately calibrated signal at the test frequencies as listed.
- Output indicating meter.
- Non-metallic screwdriver.
- Dummy antennas—.1 mf., 200 mmf., and 400 ohms.

BAND	SIGNAL GENERATOR Frequency Setting	Dummy Antenna	Connection to Radio	Position of Band Switch	Variable Condenser Setting	Trimmers Adjusted (in Order Shown)	Trimmer Function	Adjustment
I. F.	465 Kc.	.1 MFD.	Grid of 6K7	Broadcast	Rotor full open (Plates out of mesh)	Two trimmers on top (See Fig. 1)	Output I. F.	Adjust to maximum output
	465 Kc.	.1 MFD.	Grid of 6K8	Broadcast	Rotor full open (Plates out of mesh)	Two trimmers on top (See Fig. 1)	Input I. F.	Adjust to maximum output
BROAD-CAST BAND	1720 Kc.	200 mmf.	Antenna lead	Broadcast	Rotor full open (Plates out of mesh)	Trimmer (C16) (See Fig. 3)	Broadcast oscillator	Adjust to maximum output
	1400 Kc.	200 mmf.	Antenna lead	Broadcast	Set dial at 1400 Kc.	Trimmer (C6, C13) (See Fig. 3)	Broadcast antenna and R. F.	Adjust to maximum output
	600 Kc.	200 mmf.	Antenna lead	Broadcast	Set dial at 600 Kc.	Trimmer (C17) (See Fig. 3)	Broadcast oscillator series pad	Adjust to maximum rock dial. (See note "A")
SHORT WAVE BAND	17 Mc.	400 ohms	Antenna lead	Short Wave (Extreme right rotation)	Set dial at 17 MC	Trimmer (C18) (See Fig. 3)	Short wave oscillator	Adjust to maximum output
	17 Mc.	400 ohms	Antenna lead	Short Wave (Extreme right rotation)	Dial set at 17 MC	Trimmer (C4, C14) (See Fig. 3)	Short wave antenna and R. F.	Adjust to maximum output
MIDDLE WAVE BAND	5 Mc.	400 ohms	Antenna lead	Middle Wave	Set dial at 5 MC	Trimmer (C20) (See Fig. 3)	Middle wave oscillator	Adjust to maximum output
	5 Mc.	400 ohms	Antenna lead	Middle Wave	Dial set at 5 MC	Trimmer (C5, C15) (See Fig. 3)	Middle wave antenna and R. F.	Adjust to maximum output

NOTE "A" Turn the dial back and forth slightly (rock) and adjust trimmer until the peak of greatest intensity is obtained.

Attenuate the signal from the signal generator to prevent the leveling-off action of the AVC.

After each range is completed, repeat the procedure as a final check.

BAND	FREQUENCY RANGE
Broadcast	535 to 1720 KC.
Middlewave	1.69 to 5.6 MC.
Short Wave	5.5 to 18.0 MC.

Power Consumption—80 Watts (At 115 volts 50-60 cycles)
Power Output—3 Watts Undistorted, 5 Watts Maximum
Selectivity—40 KC. Broad at 1000 KC. 1000 Times Signal Strength
Intermediate Frequency—465 KC.

ALIGNMENT PROCEDURE MODEL 62-401 " 62-1100

The following equipment is required for aligning:
An All Wave Signal Generator which will provide an accurately calibrated signal at the test frequencies as listed.
Output Indicating Meter—Non-Metallic Screwdriver.
Dummy Antennas—.1 mf., 200 mmf., and 400 ohms.

Volume Control—Maximum All Adjustments.
Selectivity Control—Sharp Position All Adjustments.
Connect Radio Chassis to Ground Post of Signal Generator with a Short Heavy Lead.
Allow Chassis and Signal Generator to "Heat Up" for several minutes.

SIGNAL GENERATOR FREQUENCY SETTING	CONNECTION AT RADIO	DUMMY ANTENNA	BUTTON DEPRESSED	CONDENSER SETTING	ADJUST TRIMMERS TO MAXIMUM (Unless otherwise specified)
I. F.					
456 KC	Grid of I.F. Tube	.1 mf.	B Range	Turn Rotor to Full Open	2nd I.F. (C29) & (C30)
456 KC	Grid of 1st Det.	1 mf.	B Range	Turn Rotor to Full Open	1st I.F. (C25) & (C26)
RANGE B 1830 KC	Antenna Lead	200 mmf.	B Range	Turn Rotor to Full Open	Oscillator Range B (C15)
1500 KC	Antenna Lead	200-mmf.	B Range	Turn Rotor to Max. Output Set Indicator to 1500 KC—See Note A	Ant. Range B (C5) Int. Range B (C8)
600 KC	Antenna Lead	200 mmf.	B Range	Turn Rotor to Max. Output	600 KC (C16) Rock Rotor—See Note B
WAVE TRAP 456 KC	Antenna Lead	200 mmf.	B Range	Turn Rotor to 600 KC Adjust Sig. Gen.—See Note C	Wave Trap (C1) Adjust for MINIMUM Output
RANGE C 6350 KC	Antenna Lead	400 Ohm	C Range	Turn Rotor to Full Open	Oscillator Range C (C14)
6000 KC	Antenna Lead	400 Ohm	C Range	Turn Rotor to Max. Output	Antenna Range C (C4) Int. Range C (C7)
RANGE D 22,000 KC	Antenna Lead	400 Ohm	D Range	Turn Rotor to Full Open	Oscillator Range D (C13)
20,000 KC.	Antenna Lead	400 Ohm	D Range	Turn Rotor to Max. Output	Ant. Range D (C3) Int. Range D (C6) Rock Rotor—See Note B
7000 KC	Antenna Lead	400 Ohm	D Range	Turn Rotor to Max. Output	7000 KC (C12) Rock Rotor—See Note B
PERMEABILITY TUNING UNIT				TURN SETTING SCREW TO MAXIMUM OUTPUT —See Instruction Book	ADJUST COIL POSITION TO MAXIMUM OUTPUT —See Note D
700 KC	Antenna Lead	200 mmf.	No. 1	Setting Screw No. 1	Antenna Coil No. 1
700 KC	Antenna Lead	200 mmf.	No. 2	Setting Screw No. 2	Antenna Coil No. 2
850 KC	Antenna Lead	200 mmf.	No. 3	Setting Screw No. 3	Antenna Coil No. 3
850 KC	Antenna Lead	200 mmf.	No. 4	Setting Screw No. 4	Antenna Coil No. 4
1100 KC	Antenna Lead	200 mmf.	No. 5	Setting Screw No. 5	Antenna Coil No. 5
1100 KC	Antenna Lecd	200 mmf.	No. 6	Setting Screw No. 6	Antenna Coil No. 6

Attenuate the signal from the signal generator to prevent the leveling-off action of the AVC.

After each range is completed, repeat the procedure as a final check.

NOTE A—If the pointer is not at 1500 KC on the dial, loosen the 2 clamps which hold the pointer assembly on the cord, move the pointer to the 1500 KC mark, and tighten the clamps.

NOTE B—Turn the rotor back and forth and adjust the trimmer until the peak of greatest intensity is obtained.

NOTE C—Leave condenser rotor at the 600 KC setting and adjust the signal generator until maximum output is obtained at or near 456 KC.

NOTE D—At the bottom of the permeability tuning unit can be seen six "W" openings. Insert the end of a pair of long nose pliers or a screwdriver in the "W" opening of the proper button and adjust the position of the antenna (rear) coil by twisting the pliers or screwdriver until maximum output is obtained.

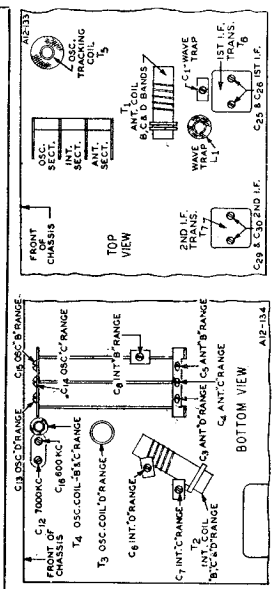

CAUTION—When aligning the short wave bands be sure NOT to adjust at the image frequency. This can be checked as follows: Let us say the signal generator is set for 5000 KC. The signal will then be heard at 5000 KC on the dial of the radio. The image signal, which is much weaker, will be heard at 5000 less 912 KC, or 4088 KC on the dial. It may be necessary to increase the input signal to hear the image.

NOTICE—Re-alignment is necessary if glass tubes are replaced by their equivalent in metal tubes, or vice verse, in the R.F. and I. F. stages.

©John F. Rider, Publisher

MONTGOMERY-WARD & CO.

MODELS 62-401, 62-1100
Schematic, Coils, Socket Specifications, Phono. Tuner

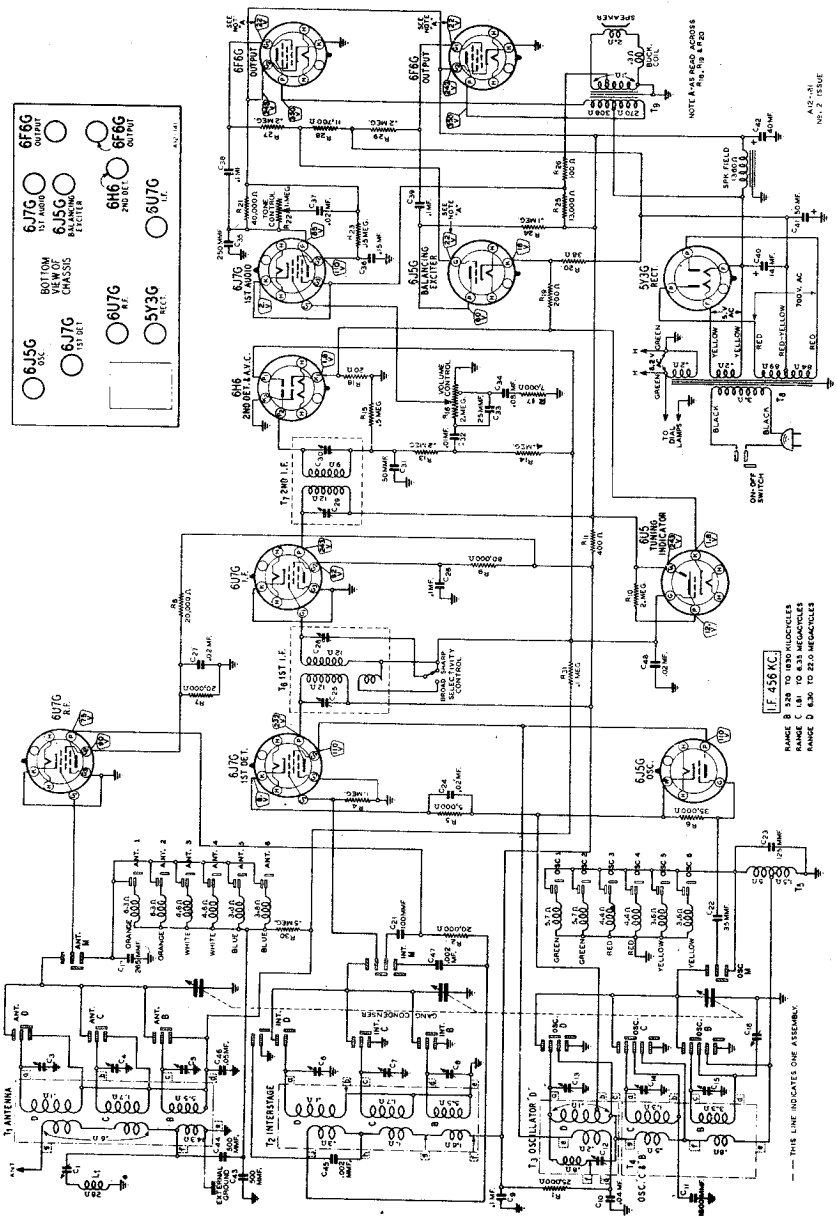

Schematic Circuit Diagram, Coil Terminals, and Phono Connections.

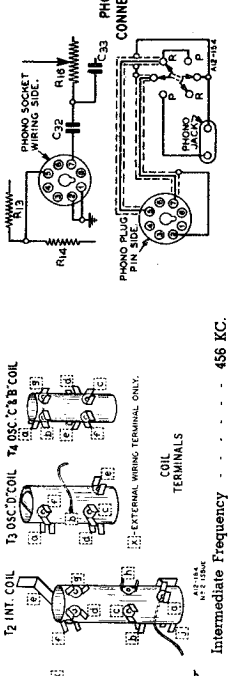

Primability Tuning Unit and Band Switch Arrangement.

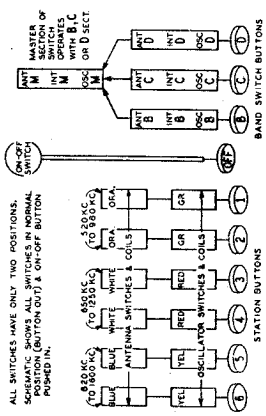

Voltages at Sockets

The voltages at sockets are shown on the schematic circuit diagram. Unless otherwise specified, the voltage indicated is between the socket terminal and ground.

These voltages are read under the following conditions:

Line Voltage—117.
Volume Control—Maximum.
Antenna Shorted to Ground.
Readings taken with 1000 ohm-per-volt meter.

Phonograph Connections

Phonograph connections are made as shown in the schematic circuit diagram. On the back panel of the chassis base is a round knockout 1¾4 inches in diameter. An octal base socket is then mounted in this knockout opening.

A phono cable assembly may then be purchased (See parts list). On one end of this cable is an octal plug and on the other end is a phonograph-radio switch and double tip jack.

ATTACHING DIAL POINTER—Tune in a 1500 KC signal. Move the pointer to the 1500 KC mark on the dial and clamp it tightly over the fabric tubing on the cord.

Twenty-Five Cycle Models

The twenty-five cycle receiver differs from the sixty cycle receiver only in the fact that a different power transformer is used.

JUNE, 1938

11 TUBE • 3 BAND • ALL WAVE
WITH AUTOMATIC TUNING

Power Consumption - 100 Watts (At 117 volts 60 cycles)
Power Output - - - - - - 8.5 Watts Undistorted
11.0 Watts Maximum
Selectivity - 32 KC Broad at 1000 times Signal (Sharp)
Sensitivity
B Range (Manual Tuning) ..... 2.0 Microvolts Average
B Range (Automatic Tuning) ..... 2.0 Microvolts Average
C Range ..... 2.0 Microvolts Average
D Range ..... 4.0 Microvolts Average

Intermediate Frequency - - - - - - - 456 KC.
Speaker - - - - - - - - - - 12" Dynamic

Tuning Frequency Range

B Range (Manual Tuning)	528	to	1830 KC
C Range (Manual Tuning)	1810	to	6350 KC
D Range (Manual Tuning)	6300	to	23000 KC
Buttons 1 & 2 (Automatic Tuning)	520	to	980 KC
Buttons 3 & 4 (Automatic Tuning)	850	to	1250 KC
Buttons 5 & 6 (Automatic Tuning)	820	to	1800 KC

©John F. Rider, Publisher

MODELS 62-402,62-1101

Schematic, Voltage

Socket Phono.

MONTGOMERY-WARD & CO.

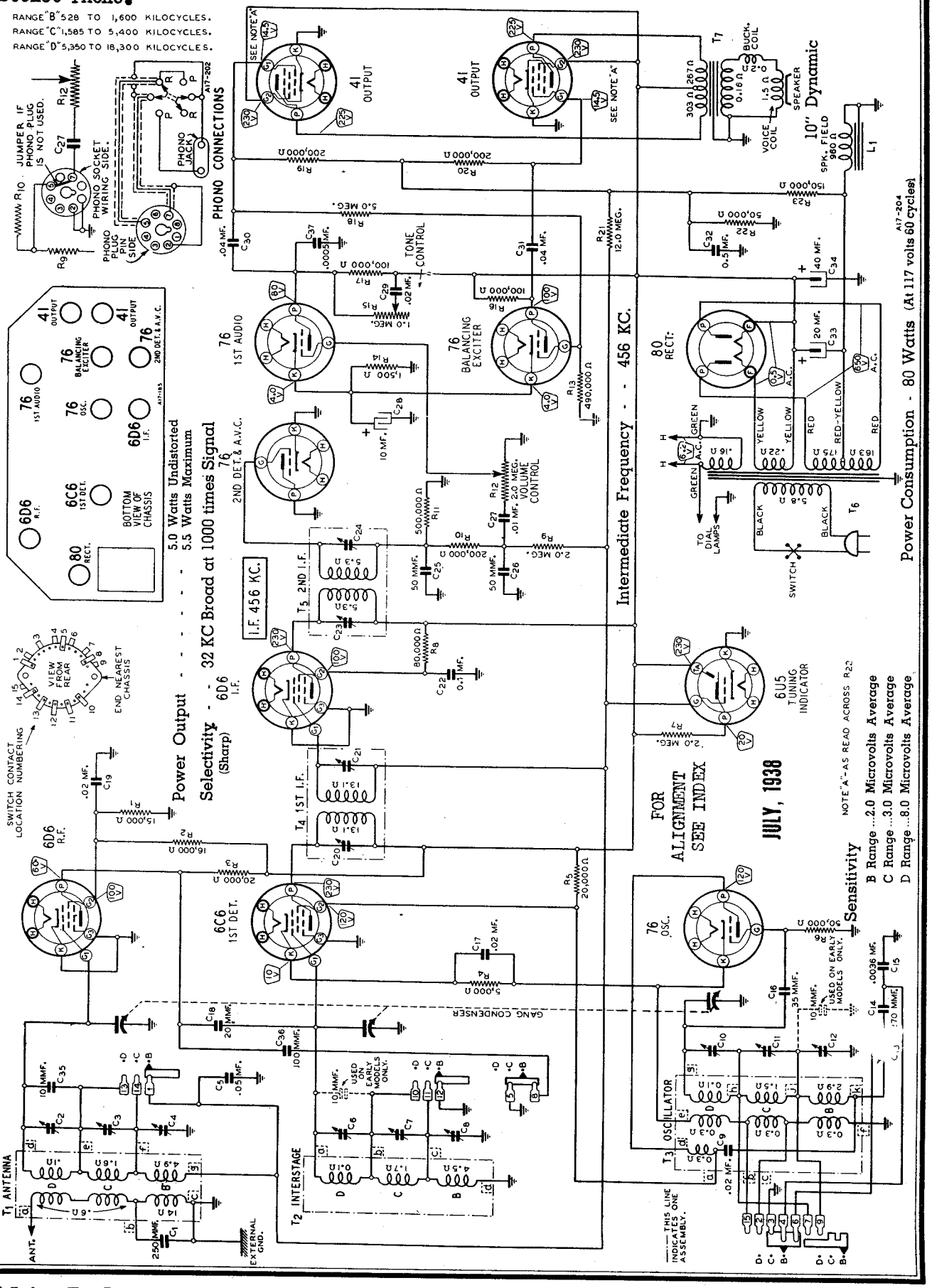

©John F. Rider, Publisher

©John F. Rider, Publisher

MONTGOMERY-WARD & CO.

MODEL 62-425
Schematic, Voltage
Alignment, Parts

TUBES:

The Tube complement of this chassis is as follows:
1 Type 6A7—pentagrid oscillator and first detector.
1 Type 78 —remote cut-off pentode as I.F. amplifier.
1 Type 75 —duplex diode triode as diode detector, A.V.C. and A.F.
1 Type 41 —pentode output tube.
1 Type 5Z4 or 5Y3—high vacuum rectifier.

R. F. ALIGNMENT: (535-1720 K. C.)

1. With gang condenser in its minimum capacity position, plates entirely out of mesh, connect an external oscillator in series with a 200 mmf. condenser to tan antenna and black ground leads and make the following adjustments:

(a) With external oscillator set at 1720 kilocycles, adjust oscillator trimmer (rear of gang condenser).

(b) Re-set external oscillator to 1400 kilocycles, rotate condenser, pick up oscillator signal and adjust antenna trimmer to resonance (front section of gang condenser).

(c) Check sensitivity at 600 and 1000 kilocycles.

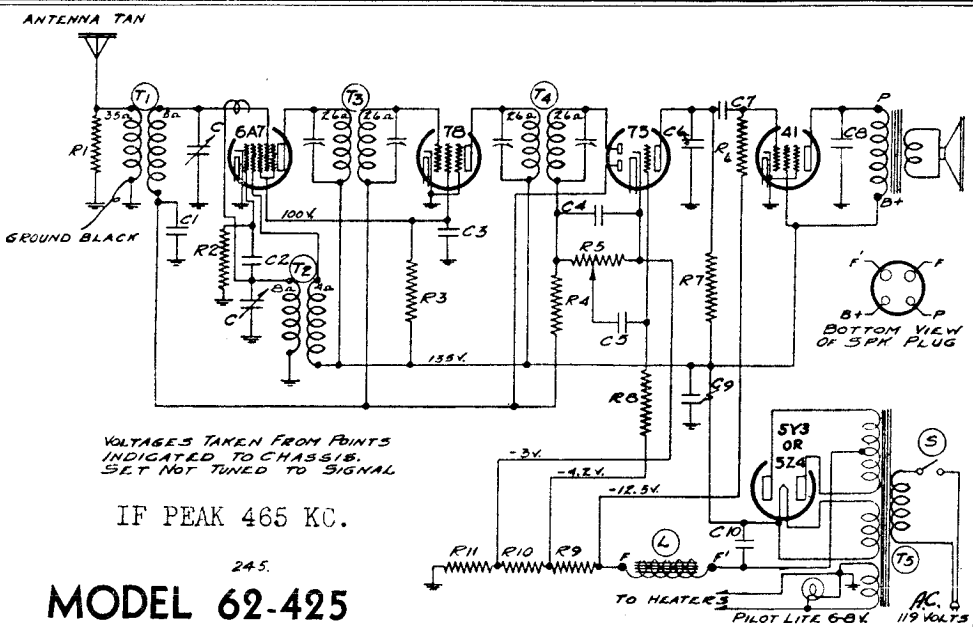

245.

MODEL 62-425

Frequency Range — 535 - 1720 Kilocycles

ALIGNING INSTRUCTIONS:

CAUTION:—No aligning adjustments should be attempted without first thoroughly checking over all other possible causes of trouble, such as poor installations, open or grounded antenna systems, low line voltages, defective tubes, condensers and resistors. In order to properly align this chassis, an oscillator (generator) is absolutely necessary. No aligning adjustments should be attempted with the chassis in the cabinet. Remove the knobs and the two bolts which are used to fasten the chassis.

All adjustments should be made with a non-metallic screw driver.

RESONANCE INDICATOR:

Use as a resonance indicator an output meter connected across the primary of the speaker input transformer, or by means of an adapter between the plate and screen terminals of the type 41 output tube. Use only enough signal to get a readily readable output. A low range output meter or the low scale of a multi-range voltmeter should be used.

ALIGNING I. F. TRANSFORMERS: (465 K. C.)

Connect external oscillator which has been adjusted to 465 kilocycles in series with .1 mfd. condenser, to the control grid cap of the type 6A7 tube. Ground the chassis to the oscillator. Adjust output I.F. transformer (No. 108-83) and input I.F. transformer (No. 108-82) to resonance. See label on bottom of cabinet for location of these transformers.

LIST OF REPAIR PARTS (Serial No. 6F275000 and up)

Part No.	Schematic Reference	Description	No. Used In Set	Selling Price Ea.
		CONDENSERS		
BE 100-11	C-5:C-7	.01 x 400 Volt Tubular	2	$0.09
BE 100-19	C-8	.006 x 600 Volt Tubular	1	.09
BE 100-20	C-3	.1 x 200 Volt Tubular	1	.11
BE 100-22	C-1	.05 x 200 Volt Tubular	1	.10
BE 119-24	C-9:C-10	Dual 5 mfd. x 200 Volt Electrolytic	1	.74
BE 129-5	C-6	.0001 Mica—Type MT—20%	1	.09
BE 129-12	C-2:C-4	.00025 Mica—Type MT—20%	2	.12
		RESISTORS		
BE 106-29	R-9:R-10: R-11	(R9, 200 ohm): (R10, 33 ohm): (R11, 100 ohm) Metal clad resistor	1	.16
BE 130-17	R-1	10M Ohm-1/3 Watt-20%-20 V. Carbon	1	.08
BE 130-22	R-3	5 M Ohm-1/3 Watt-20%-10 V. Carbon	1	.08
BE 130-117	R-2	50M Ohm 1/10 Watt-20%-50 V. Carbon	1	.06
BE 130-118	R-6	600M Ohm 1/3 Watt-20%-100 V. Carbon	1	.06
BE 130-121	R-4:R-8	3.2 Meg Ohm-1/3 Watt-30%-100 V. Carbon	2	.06
BE 130-122	R-7	210 Ohm-1/10 Watt-30%-20%-50 V. Carbon	1	.06
		COILS		
BE 108-82	T3	Input I.F. Coil Assem. Comp. with Can.	1	.60
BE 108-83	T4	Output I.F. Coil Assem. Comp. with Can.	1	.60
BE 110-46	T2	Oscillator Coil Assembly Complete.	1	.30
BE 111-58	T1	Antenna Coil Assembly Complete.	1	.36
		SOCKETS		
BE 121-6		Six Prong Socket—Marked "41"	1	.09
BE 121-6		Six Prong Socket—Marked "75"	1	.09
BE 121-6		Six Prong Socket—Marked "78"	1	.09
BE 121-7		Seven Prong Socket—Marked "6A7"	1	.10
BE 121-9		Four Prong Socket—Marked "SPKR"	1	.08
BE 121-16		Five Prong Socket—Marked "5Z4" (Octal)	1	.08
		SPEAKER		
BE 114-42	L	Five Inch Dynamic Speaker	1	2.70
		TRANSFORMERS		
BE 104-60	T5	50-60 Cycle—105-115 Volt Power Trans.	1	1.34
BE 104-64		25 Cycle—105-115 Volt Power Trans.	1	2.25
BE 104-67		25 Cycle—Universal Power Transformer	1	3.00
		MISCELLANEOUS		
BE 101-54	R-5	Volume Control and Switch 1 meg ohm)	1	.54
BE 102-33	C	Two Gang Variable Condenser	1	1.30
BE 107-39		Line Cord & Plug	1	.20
BE 131-2		Bakelite Knob	1	.06
BE 131-8		Spring for above knob	2	.01
		DIAL PARTS LIST		
BE 107-28		Pilot Light Socket	1	.04
BE 112-15		Dial Crystal only—less escutcheon	1	.04
BE 112-160		Dial Pointer Complete with screw	1	.04
BE 112-164		Bakelite Escutcheon complete with crystal	1	.15
BE 112-167A		Dial Scale	1	.10
BE 116-13		6-8 Volt, T-51 Pilot Light Bulb	1	.08
BE 117-59		Pointer Bushing Stud	1	.03
BE 117-60		Pointer Bushing Assembly	1	.10
BE 117-61		Drive Pulley	1	.05
BE 117-68		Dial Bracket	1	.05
BE 120-7A		Take-up Spring	1	.02
BE 131-52		Drive Belt	1	.02
BE 134-9		Horse Shoe Washer	1	.01

Note: Speakers cannot be ordered, defective speakers must be repaired.
All resistors and mica condensers are RMA color coded—specify value and/or resistor or condenser (per schematic diagram) and model number.
Mica condensers are coded with an additional dot indicating tolerance:

Tolerance Percent	Color of Dot
2½%	White
5%	Green
10%	Blue
15%	Yellow
20%	Red
More than—20%	None

When ordering condensers, specify part number, tolerance and/or schematic reference number.

When ordering parts, always specify part and model number as well as serial number of chassis.

MODELS 62-434, 62-435
Schematic, Voltage, Parts
Socket, Trimmers

MONTGOMERY-WARD & CO.

The tube complement of this chassis consists of the following tubes.

The type and function of each tube is as follows:

1—Type 1C7G Pentagrid Mixer, First Detector-oscillator
1—Type 1D5G Remote Cut-Off Pentode, 1st I.F. Amplifier (465 K. C.)
1—Type 1D5G Remote Cut-Off Pentode, 2nd I.F. Amplifier (465 K. C.)
1—Type 1F7G Duplex Diode Pentode Second Detector, A. V. C. and First Audio.
1—Type 1G5G Pentode Output Amplifier.

Voltages taken from different points of circuit to chassis are measured with volume control full on, all tubes in their sockets and speaker connected, with a volt meter having a resistance of 1000 ohms per volt.

All voltages as indicated on diagram, are measured with a new set of batteries.

Resistances of coil windings are indicated in ohms on the schematic circuit diagram.

To check for open by-pass condensers, shunt each condenser with another condenser of the same capacity and voltage rating, which is known to be good, until the defective unit is located.

The approximate current consumption is as follows: "A"—420 ma., "B"—16 ma.

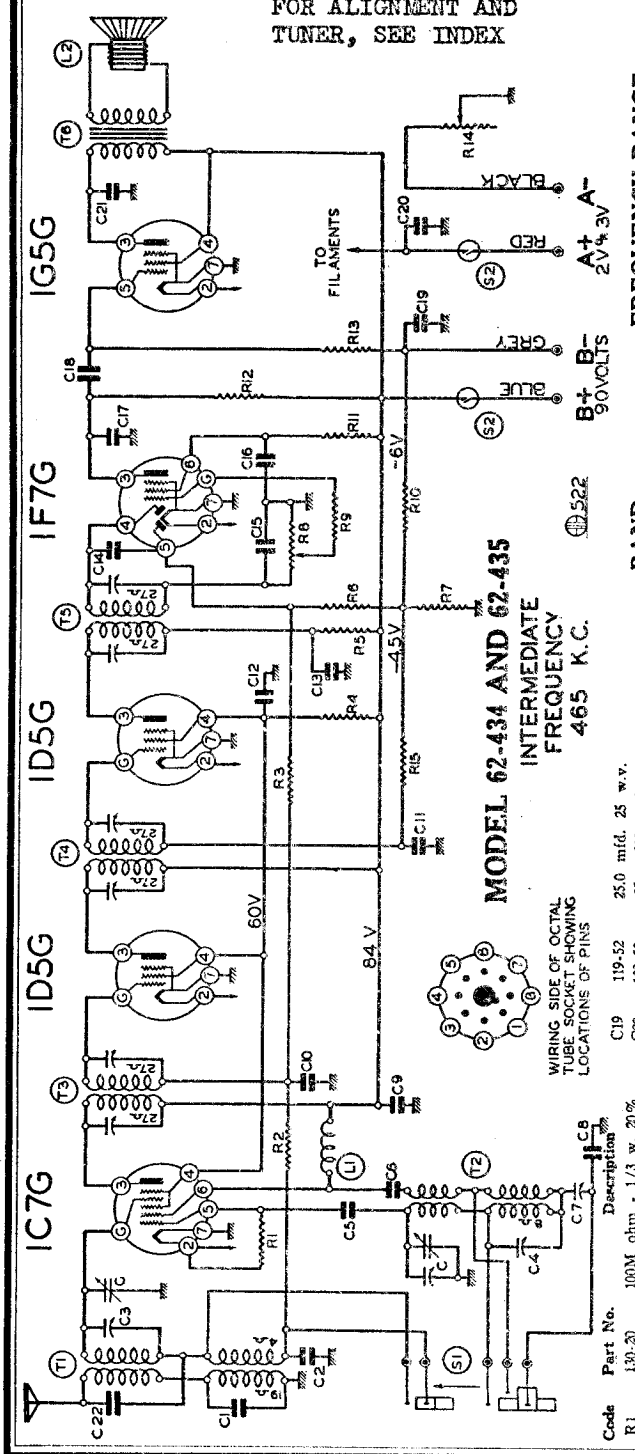

BAND	FREQUENCY RANGE
Broadcast	535 to 1750 K.C. (Kilocycles)
Short Wave	5.5 to 18.1 M.C. (Megacycles)

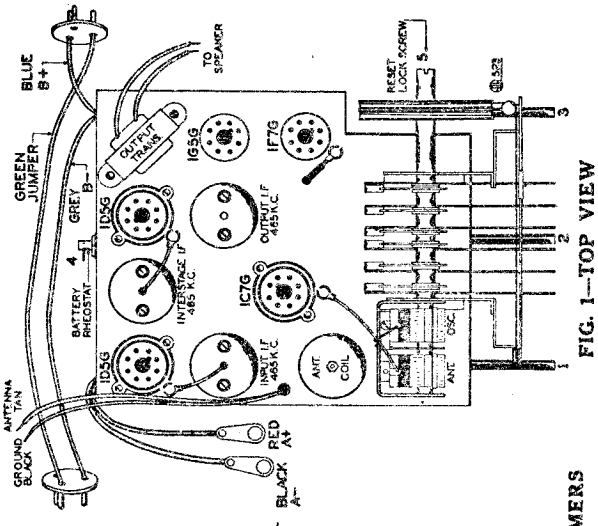

FIG. 1—TOP VIEW

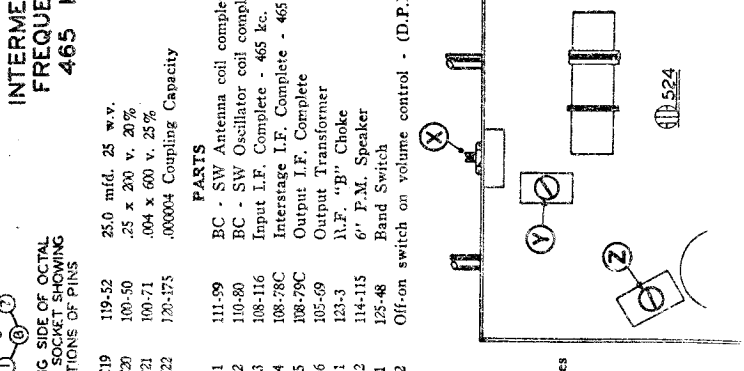

FIG. 3.—BOTTOM VIEW SHOWING TRIMMERS

Code	Part No.	Description
R1	130-20	100M ohm - 1/3 w. 20%
R2	130-20	100M ohm - 1/3 w. 20%
R3	130-19	1 megohm - 1/3 w. 20%
R4	130-167	7500 ohm - 1/3 w. 20%
R5	130-85	3000 ohm - 1/3 w. 20%
R6	130-19	1 megohm - 1/3 w. 20%
R7	130-83	300 ohm - 1/3 w. 10%
R8	101-111	250M ohm - volume control
R9	130-12	50M ohm - 1/3 w. 20%
R10	130-168	100 ohm - 1/3 w. 10%
R11	130-19	1 megohm - 1/3 w. 20%
R12	130-11	250M ohm - 1/3 w. 20%
R13	130-19	1 megohm - 1/3 w. 20%
R14	101-112	3.2 ohm - Filament Rheostat
R15	130-19	1 megohm - 1/3 w. 20%
C	102-70	2 gang variable condenser
C1	129-40	.0001 mica 10%
C2	100-22	.05 x 200 v. 25%
C3	129-39	2-20 mmf. Adj. Cond.
C4	129-39	2-20 mmf. Adj. Cond.
C5	129-38	.00005 Mica 10%
C6	100-25	.002 x 600 v. 25%
C7	124-38	580 mmf. Working Capacity-Series Pad
C8	129-94	.003 minimum 2-1/2%
C9	100-50	.25 x 200 v. 20%
C10	100-86	.02 x 400 v. 25%
C11	100-59	.05 x 200 v. 25%
C12	100-50	.25 x 200 v. 20%
C13	100-20	.1 x 200 v. 25%
C14	129-3	.00002 Mica 20%
C15	129-60	.00015 Mica 20%
C16	100-20	.1 x 200 v. 25%
C17	129-21	.002 Mica 20%
C18	100-11	.01 x 400 v. 25%
C19	119-52	25.0 mfd. 25 w.v.
C20	100-50	.25 x 200 v. 20%
C21	100-71	.004 x 600 v. 25%
C22	120-175	.000004 Coupling Capacity

PARTS

T1	111-99	BC - SW Antenna coil complete
T2	110-80	BC - SW Oscillator coil complete
T3	108-116	Input I.F. Complete - 465 kc.
T4	108-78C	Interstage I.F. Complete - 465 kc.
T5	108-79C	Output I.F. Complete
T6	105-69	Output Transformer
L1	123-3	R.F. "P" Choke
L2	114-115	6" P.M. Speaker
S1	125-48	Band Switch
S2		Off-on switch on volume control - (D.P.D.T.)

©John F. Rider, Publisher

ALIGNMENT

Attenuate the signal from the signal generator to prevent the leveling-off action of the AVC.

After each range is completed, repeat the procedure as a final check.

NOTE A—Hold the tuning knob and turn the film drum until it is at the 1500 KC mark on the dial.

NOTE B—Turn the rotor back and forth and adjust the trimmer until the peak of greatest intensity is obtained.

NOTE C—At the bottom of the permeability tuning unit can be seen six "W" openings. Insert the end of a pair of long nose pliers or a screwdriver in the "W" opening of the proper button and adjust the position of the antenna (rear) coil by twisting the pliers or screwdriver until maximum output is

ALL SWI
SCHEMA
POSITI
PUSHE

13 Tube AC Radio

FOR TUNER DATA SEE INDEX

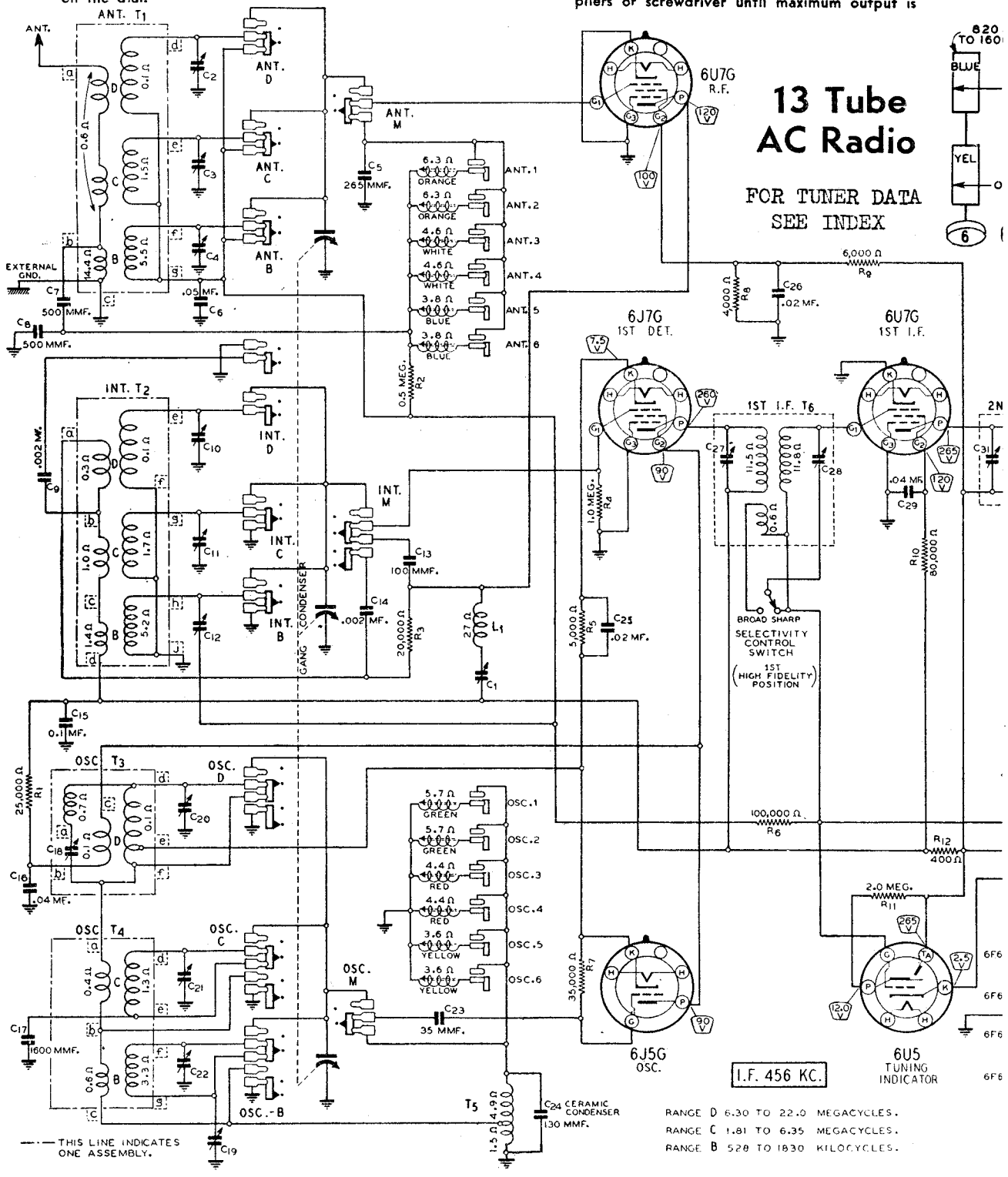

©John F. Rider, Publisher

RY-WARD & CO.

MODEL 62-403
Schematic, Voltage
Socket, Alignment Notes

CAUTION—When aligning the short wave bands, be sure NOT to adjust at the image frequency. This can be checked as follows:

Let us say the signal generator is set for 5000 KC. The signal will then be heard at 5000 KC on the dial of the radio. The image signal, which is much weaker, will be heard at 5000 less 912 KC, or 4088 KC on the dial. It may be necessary to increase the input signal to hear the image.

NOTICE—Re-alignment is necessary if glass tubes are replaced by their equivalent in metal tubes, or vice versa, in the R.F. and I.F. stages.

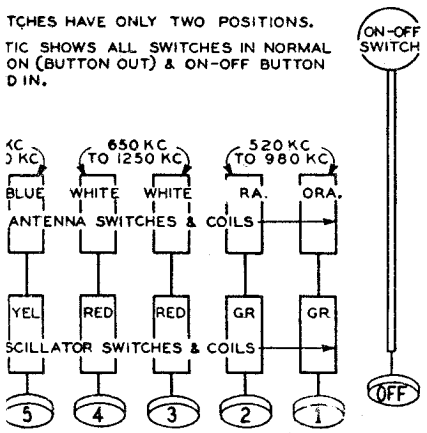

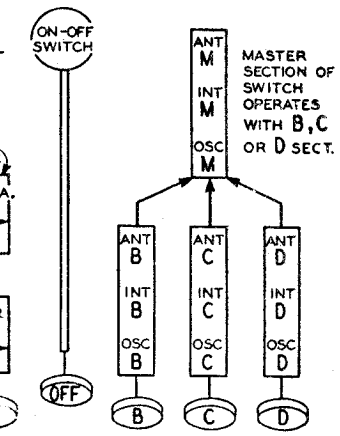

VIEW FROM BOTTOM FRONT OF CHASSIS

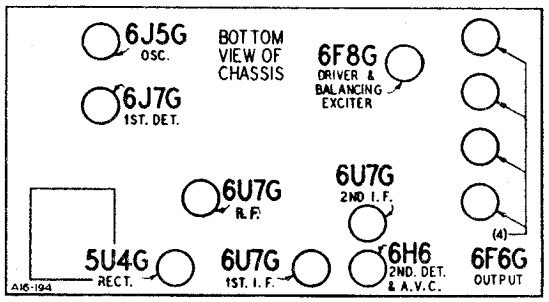

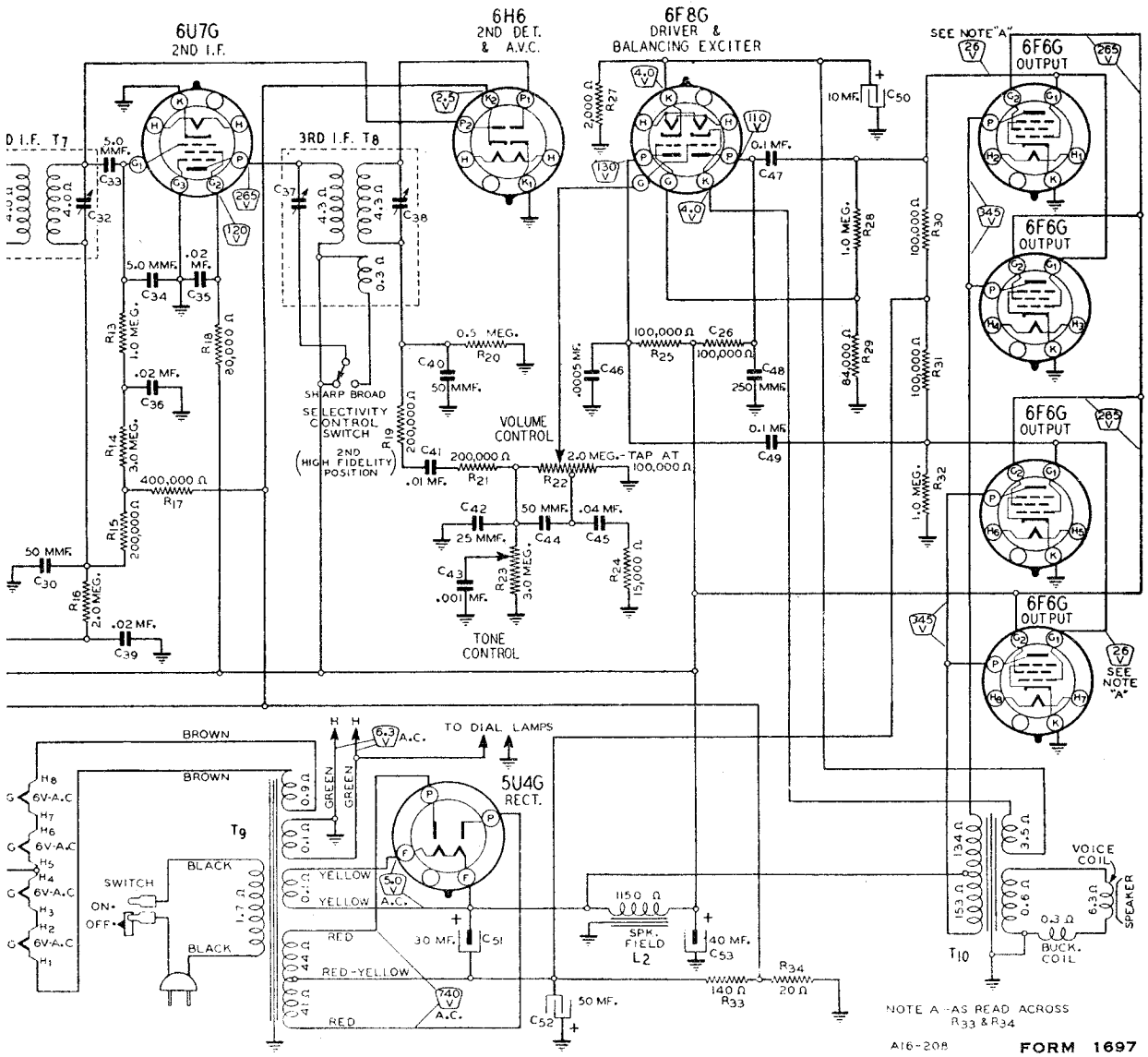

©John F. Rider, Publisher

MODELS 62-315 and 62-415

Voltages taken from different points of circuit to chassis are measured with volume control full on, all tubes in their sockets and speaker connected, with a volt meter having a resistance of 1000 ohms per volt.

All voltages as indicated on diagram are measured with 119 volts on the primary of the power transformer.

Resistances of coil windings are indicated in ohms on the schematic circuit diagram.

To check for open by-pass condensers, shunt each condenser with another condenser of the same capacity and voltage rating, which is known to be good, until the defective unit is located.

DUMMY ANTENNAS:

The following dummy antennas are used in aligning and are referred to in the following alignment instructions as "Dummy 1," "Dummy 2," and "Dummy 3."

Dummy 1: (I.F.)—Consists of a .1 mfd. condenser connected in series with the external oscillator.

Dummy 2: (Broadcast)—Consists of a 200 mmfd. condenser and a 20 ohm resistor connected in series with each other and in series with the external oscillator.

Dummy 3: (Short Wave)—Consists of a .1 mfd. condenser and a 400 ohm resistor connected in series with each other and in series with the external oscillator.

ALIGNING I.F. TRANSFORMERS: (465 K.C.):

Part No. 108-76 Output I.F. Transformer
Part No. 108-75 Input I.F. Transformer

These I.F. transformers have two adjustments, both of which are accessible from the top of chassis (see top view).

1. With volume control full on (the extreme right of its rotation), the band changing switch in the broadcast position, (extreme left of its rotation), and with the variable condenser set to approximately 1400 kilocycles, make the following adjustments:

   (a) Connect external oscillator set at 465 kilocycles, in series with "Dummy 1," to the control grid cap of the type 78 tube, and adjust the output I.F. transformer (No. 108-76) to resonance.

   (b) With "Dummy 1" still connected, move oscillator output clip from grid of 78 to grid cap to 6A7 and adjust input I.F. transformer (No. 108-75) to resonance.

   (c) With oscillator still connected to 6A7, readjust output I.F. transformer (108-76) if necessary.

BROADCAST AND SHORT WAVE BAND ALIGNMENT

Broadcast Band:—535 to 1720 Kilocycles.

Short Wave Band:—2280 to 6600 Kilocycles.

Important:—These adjustments must be made in the following order:

SHORT WAVE OSCILLATOR ADJUSTMENT:

1. With band switch in the short wave band position, extreme right of its rotation, and with the gang condenser in its minimum capacity position, plates entirely out of mesh, and with the external oscillator connected in series with "Dummy 1" to grid cap of the 6A7 tube, make the following adjustment:

   (a) Set external oscillator to 6.6 megacycles and adjust short wave oscillator trimmer to resonance. This adjustment is marked "S.W. Osc." (see top view of chassis, Fig. 1, for location of this adjustment).

NOTE: Make certain that the fundamental 6.6 megacycles signal has been tuned in and not the image frequency, noting that the image appears when the tuning knob is moved to approximately 5.7 megacycles.

BROADCAST BAND OSCILLATOR ADJUSTMENT:

1. With band switch in the broadcast position, extreme left of its rotation, and with the gang condenser in its minimum capacity position, plates entirely out of mesh, and with external oscillator connected in series with "Dummy 1" to grid cap of the 6A7 tube, make the following adjustment:

   (a) Set external oscillator to 1720 K.C. and adjust broadcast oscillator trimmer to resonance. This adjustment is the trimmer mounted on the front section of the variable gang condenser.

BROADCAST BAND ANTENNA ADJUSTMENT:

1. With the band switch still in the broadcast position, move the external oscillator from the grid cap of the 6A7 tube to the tan antenna lead and black ground lead, in series with "Dummy 2" and make the following adjustments:

   (a) Set external oscillator to 1550 K.C., rotate variable gang condenser and pick up signal. Adjust broadcast antenna trimmer to resonance. This adjustment is marked "B.C. Ant." (See top view of chassis, Fig 1, for location of this adjustment.)

   (b) Re-set external oscillator to 600 K.C. and adjust broadcast series pad to resonance by rotating condenser to approximately 600 K.C., rocking it slowly to and fro until, by adjusting series pad, maximum output is attained. This adjustment is located on the top of the chassis directly in front of the antenna coil. (See top view of chassis, Fig. 1).

   (c) Repeat adjustments "a" and "b" until sensitivity is at its maximum.

SHORT WAVE BAND ANTENNA ADJUSTMENT:

1. With the band switch in the short wave position, and with external oscillator connected in series with "Dummy 3," to the tan antenna lead and black ground lead, make following adjustment:

   (a) Set external oscillator to 6 megacycles and adjust the short-wave antenna trimmer to resonance. This adjustment is the trimmer mounted on the rear section of the variable gang condenser.

ALIGNMENT PROCEDURE

Model 62-403 — WG Series A16

The following equipment is required for aligning:

An All Wave Signal Generator which will provide an accurately calibrated signal at the test frequencies as listed.

Output Indicating Meter—Non-Metallic Screwdriver.

Dummy Antennas—.1 mf., 200 mmf., and 400 ohms.

Volume Control—Maximum All Adjustments.

Selectivity Control—Sharp Position All Adjustments.

Connect Radio Chassis to Ground Post of Signal Generator with a Short Heavy Lead.

Allow Chassis and Signal Generator to "Heat Up" for several minutes.

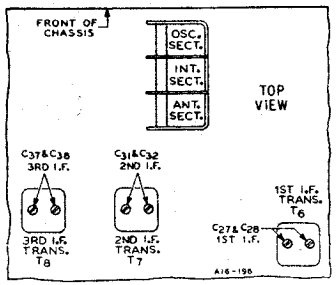

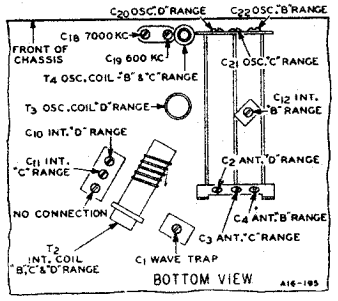

SIGNAL GENERATOR FREQUENCY SETTING	SIGNAL GENERATOR CONNECTION AT RADIO	DUMMY ANTENNA	BUTTON DEPRESSED	CONDENSER SETTING	ADJUST TRIMMERS TO MAXIMUM (Unless otherwise specified)
I. F.					
456 KC	Grid of 2nd I.F. Tube	.1 mf.	B Range	Turn Rotor to Full Open	3rd I.F. (C37) & (C38)
456 KC	Grid of 1st I.F. Tube	.1 mf.	B Range	Turn Rotor to Full Open	2nd I.F. (C31) & (C32)
456 KC	Grid of 1st Det.	.1 mf.	B Range	Turn Rotor to Full Open	1st I.F. (C27) & (C28)
WAVE TRAP					
456 KC	Antenna Lead	200 mmf.	No. 1		Wave Trap (C1) Adjust for MINIMUM Output
RANGE B					
1830 KC	Antenna Lead	200 mmf.	B Range	Turn Rotor to Full Open	Oscillator Range B (C22)
1500 KC	Antenna Lead	200 mmf.	B Range	Turn Rotor to Max. Output Set Indicator to 1500 KC—See Note A	Ant. Range B (C4) Int. Range B (C12)
600 KC	Antenna Lead	200 mmf.	B Range	Turn Rotor to Max. Output	600 KC (C19) Rock Rotor—See Note B
RANGE C					
6350 KC	Antenna Lead	400 Ohm	C Range	Turn Rotor to Full Open	Oscillator Range C (C21)
6000 KC	Antenna Lead	400 Ohm	C Range	Turn Rotor to Max. Output	Antenna Range C (C3) Int. Range C (C11)
RANGE D					
22,000 KC	Antenna Lead	400 Ohm	D Range	Turn Rotor to Full Open	Oscillator Range D (C20)
20,000 KC	Antenna Lead	400 Ohm	D Range	Turn Rotor to Max. Output	Ant. Range D (C2) Int. Range D (C10) Rock Rotor—See Note B
7000 KC	Antenna Lead	400 Ohm	D Range	Turn Rotor to Max. Output	7000 KC (C18) Rock Rotor—See Note B

PERMEABILITY TUNING UNIT				TURN SETTING SCREW TO MAXIMUM OUTPUT —See Instruction Book	ADJUST COIL POSITION TO MAXIMUM OUTPUT —See Note C
700 KC	Antenna Lead	200 mmf.	No. 1	Setting Screw No. 1	Antenna Coil No. 1
700 KC	Antenna Lead	200 mmf.	No. 2	Setting Screw No. 2	Antenna Coil No. 2
850 KC	Antenna Lead	200 mmf.	No. 3	Setting Screw No. 3	Antenna Coil No. 3
850 KC	Antenna Lead	200 mmf.	No. 4	Setting Screw No. 4	Antenna Coil No. 4
1100 KC	Antenna Lead	200 mmf.	No. 5	Setting Screw No. 5	Antenna Coil No. 5
1100 KC	Antenna Lead	200 mmf.	No. 6	Setting Screw No. 6	Antenna Coil No. 6

MONTGOMERY-WARD & CO.
MODEL 62-403 Trimmers, Alignment
MODELS 62-315, 62-415 Alignment
MONT.-WARD PAGE 9-61

MODELS 62-506,62-516
Schematic,Voltage
Socket,Trimmers,Parts

MONTGOMERY-WARD & CO.

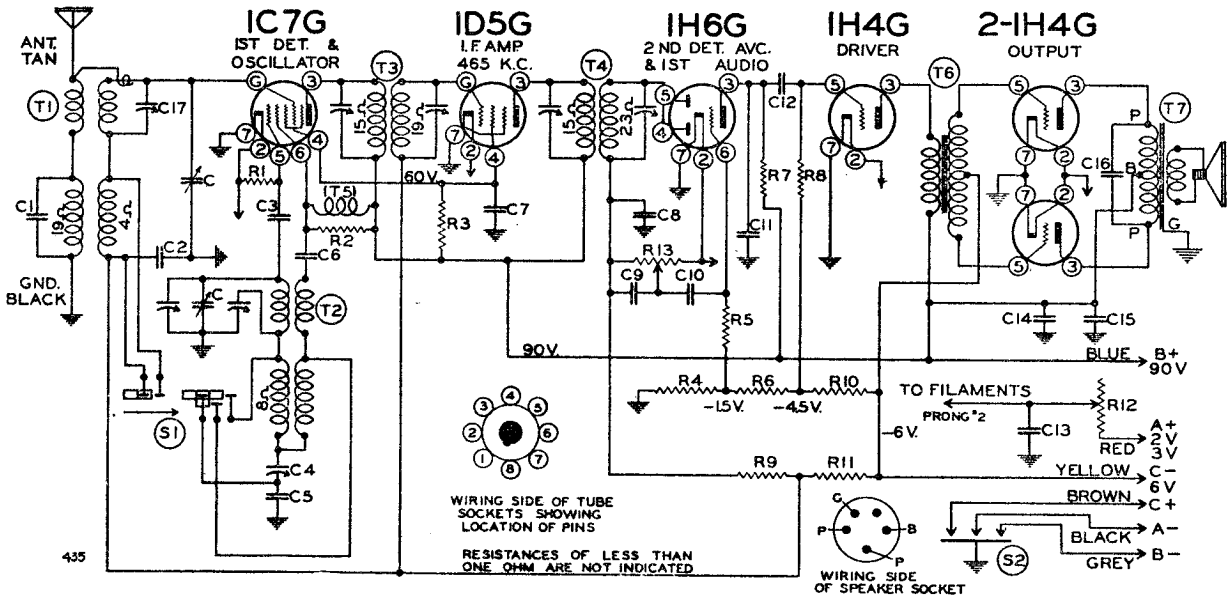

LIST OF REPAIR PARTS (Serial No. 7J837000 and up)

USE ONLY GENUINE FACTORY REPLACEMENT PARTS

Bin No.	Part No.	Schematic Reference	Description	No. used in set	Selling price each
			CONDENSERS		
11256	BE100-11	C10, C12	.01x400 volt Tubular	2	.09
10929	BE100-20	C7	.1x200 volt Tubular	1	.10
11106	BE100-22	C2	.05x200 volt Tubular	1	.10
10934	BE100-25	C6	.002x600 volt Tubular	1	.09
11288	BE100-48	C13	.25x200 volt Tubular (with bracket)	1	.15
10888	BE100-71	C16	.004x600 volt Tubular	1	.10
11288	BE100-72	C15	.25x200 volt Tubular (with bracket)	1	.15
10086	BE119-44	C14	5 Mfd. Lytic Filter Condenser	1	.50
	BE124-38	C4	Series Padder Condenser (600 M M F)	1	.20
	BE124-39	C17	Trimmer Condenser for Antenna Coil (2-20 M M F)	1	.10
10930	BE129-2	C11	.0005 Mica — Type MT — 20%	1	.09
	BE129-3	C9	.00002 Mica — Type MT — 20%	1	.09
11335	BE129-5	C1	.0001 Mica — Type MT — 20%	1	.09
10625	BE129-39	C3, C8	.00005 Mica — Type MT — 20%	2	.10
10932	BE129-54	C5	.003 Mica — Type MW — 2½%	1	.25
			RESISTORS		
11097	BE130-9	R7	200 M Ohm—1/3 watt—20%	1	.08
11068	BE130-12	R2	50 M Ohm—1/3 watt—20%	1	.08
11188	BE130-19	R8	1 Meg. Ohm—1/3 watt—20%	1	.08
10156	BE130-31	R4, R10	1500 Ohm—1/3 watt—20%	2	.08
11124	BE130-64	R6	3500 Ohm—1/3 watt—20%	1	.08
11065	BE130-82	R3	10 M Ohm—1/3 watt—10%	1	.08
10968	BE130-103	R1	100 M Ohm—1/3 watt—10%	1	.08
11057	BE130-188	R11	4 Meg. Ohm—1/3 watt—10%	1	.08
11061	BE130-189	R5, R9	3 Meg. Ohm—1/3 watt—10%	2	.08
			COILS		
	BE108-111	T3	Input I.F. Coil Assembly complete with can	1	.70
	BE108-112	T4	Output I.F. Coil Assembly complete with can	1	.70
	BE110-66B	T2	Oscillator Coil Assembly complete	1	.40
	BE111-83	T1	Antenna Coil Assembly complete with can	1	.60
	BE123-4	T5	R.F. Choke Coil complete	1	.25
			SOCKETS		
10937	BE121-8		Five Prong Socket — marked "Spkr"	1	.08
	BE121-81		Seven Prong Octal Socket—marked "1C7"	1	.10
	BE121-82		Five Prong Octal Socket — marked "1D5"	1	.08
	BE121-83		Eight Prong Octal Socket — marked "1H6"	1	.10
	BE121-84		Four Prong Octal Socket — marked "1H4"	2	.08
	BE121-85		Seven Prong Octal Socket—marked "1H4"	1	.10
			SPEAKERS		
	BE114-92	T7	Six inch P.M. Dynamic Speaker for Mantel Model 62-516	1	3.00
	BE114-93		Eight inch P.M. Dynamic Speaker for Console Model 62-506	1	4.00
			MISCELLANEOUS		
11220	BE101-88	R13, S2	Volume Control and Switch (1 Meg Ohm)	1	.60
11255	BE101-89	R12	Filament Rheostat complete (3.2 Ohms)	1	.30
	BE102-59	C	Two Gang Variable Condenser	1	1.50
	BE105-51	T6	Audio input Transformer	1	.80
	BE115-22		Tube Shield	1	.10
	BE123-4		R.F. Choke Coil Assembly	1	.25
	BE124-38		Series Padder Condenser	1	.20
	BE124-39		Trimmer Condenser for Antenna Coil	1	.10
10033	BE125-38	S1	Band Switch complete	1	.30
	BE121-35		Plug for Wires to "B" Batteries	2	.08
11359	BE128-44		"Volume" Knob with Spring	1	.08
11360	BE128-46		"Band Switch" Knob with Spring	1	.08
11363	BE128-47		"Tuning" Knob with Spring	1	.08
	BE131-95		Battery Lug marked A—	1	.02
	BE131-96		Battery Lug Marked A+	1	.02
			DIAL PARTS LIST		
	BE112-315		Dial Drive Assembly complete with Drive Drum, Bracket, Dial Scale and Pointer	1	1.20
10041	BE112-282		Oval Escutcheon complete	1	1.00
10042	BE112-308		Dial Scale only	1	.24
11376	BE112-317		"On-Off Semaphore Indicator complete	1	.20

Note: Speakers cannot be ordered, defective speakers must be repaired.
All resistors and mica condensers are RMA color coded—specify value and/or resistor or condenser (per schematic diagram) and model number.
Mica condensers are coded with an additional dot indicating tolerance:

Tolerance Percent	Color of Dot
2½%	White
5%	Green
10%	Blue
15%	Yellow
20%	Red
More than—20%	None

When ordering parts, always specify part and model number as well as serial number of chassis.
When ordering condensers, specify part number, tolerance and/or schematic reference number.

6064 6500 9-37

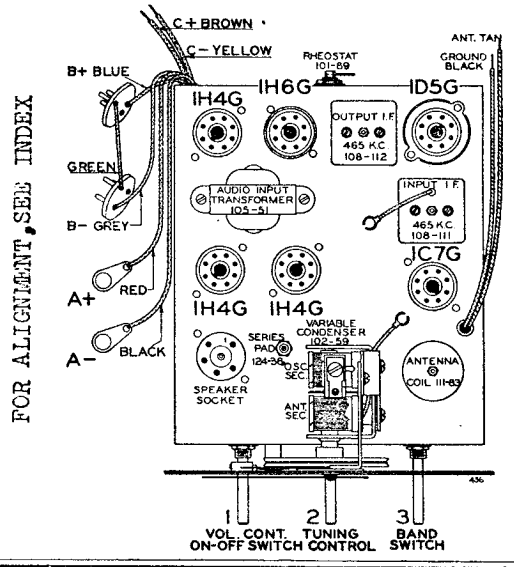

FOR ALIGNMENT, SEE INDEX

©John F. Rider, Publisher

MONTGOMERY WARD & CO.

MODELS 62-445, 62-455 62-475 Schematic, Socket Voltage, Trimmers Alignment, Parts

No.	Part No.	Description		No.	Part No.	Description		No.	Part No.	Description	
		CONDENSERS		C10	100-19	006 x 600 v.	25%	R10	130-9	200M ohm — 1/3 w. 20%	
C	102-49	2 Gang Variable				C8 and C9 in one unit		R11	130-118	600M ohm — 1/3 w. 20%	
C1	100-9	.05 x 200 v.	25%			RESISTORS				R7, R8 and R9 in one unit.	
C2	129-12	.00025 Mica	20%	R1	130-17	10M ohm — 1/3 w. 20%				PARTS	
C3	100-1	.1 x 400 v. —50 —10%		R2	130-12	50M ohm — 1/3 w. 20%		T1	111-58B	Antenna Coil Complete	
C4	129-5	.0001 Mica	20%	R3	130-149	15M ohm — 1/3 w. 20%		T2	110-46	Oscillator Coil Complete	
C5	100-11	.01 x 400 v.	25%	R4	130-170	3 megohm — 1/3 w. 25%		T3	108-82B	Input I.F. Complete	
C6	129-2	.0005 Mica	20%	R5	101-77	1 megohm volume control		T4	108-83B	Output I. F. Complete	
C7	100-11	.01 x 400 v.	25%	R6	130-170	3 megohm — 1/3 w. 25%		T5	114-72	5" Dynamic Speaker	
C8	119-38	5.0 x 200 wv. lytic		R7	106-35	65 ohm		T6	104-100	Power Transformer	
C9	119-38	5.0 x 250 wv. lytic		R8	106-35	45 ohm		L1		Speaker Field (2000 ohm)	
				R9	106-35	220 ohm		S1		Switch on Volume Control	

MODELS 62-475, 62-445 and 62-455
Frequency Range — 535 - 1720 Kilocycles

FIG. 1—TOP VIEW

ALIGNING I.F. TRANSFORMERS: (465 K.C.):

Part No. 108-83B Output I.F. Transformer
Part No. 108-82B Input I.F. Transformer

These I.F. transformers have two adjustments, both of which are accessible from the top of chassis (see Fig. 1).

1. With volume control full on (the extreme right of its rotation), and with the variable condenser set to approximately 1400 kilocycles, make the following adjustments:
   (a) Connect external oscillator set at 465 kilocycles, in series with .1 mfd. condenser, to the control grid cap of the type 6K7G tube, and adjust the output I.F. transformer (No. 108-83B) to resonance.
   (b) Move oscillator output clip from grid of 6K7G to grid of 6A8G and adjust input I.F. transformer (No. 108-82B) to resonance.
   (c) With oscillator still connected to 6A8G, readjust output I.F. transformer (108-83B) if necessary.

R.F. ALIGNMENT: (535-1720 K.C.)

1. With gang condenser in its minimum capacity position, plates entirely out of mesh, connect an external oscillator in series with a 200 mmf. condenser to the antenna lead and chassis ground and make the following adjustments:
   (a) With external oscillator set at 1720 kilocycles, adjust oscillator trimmer to resonance. This adjustment is on the top of rear section of variable gang condenser. (See Fig. 1).
   (b) Re-set external oscillator to 1400 kilocycles, rotate condenser, pick up oscillator signal and adjust antenna trimmer to resonance. (Top of front section of gang condenser).
   (c) Check sensitivity at 600 and 1000 kilocycles.

©John F. Rider, Publisher

MODEL 62-465
Schematic, Voltage
Socket, Trimmers
Notes, Parts

MONTGOMERY-WARD & CO.

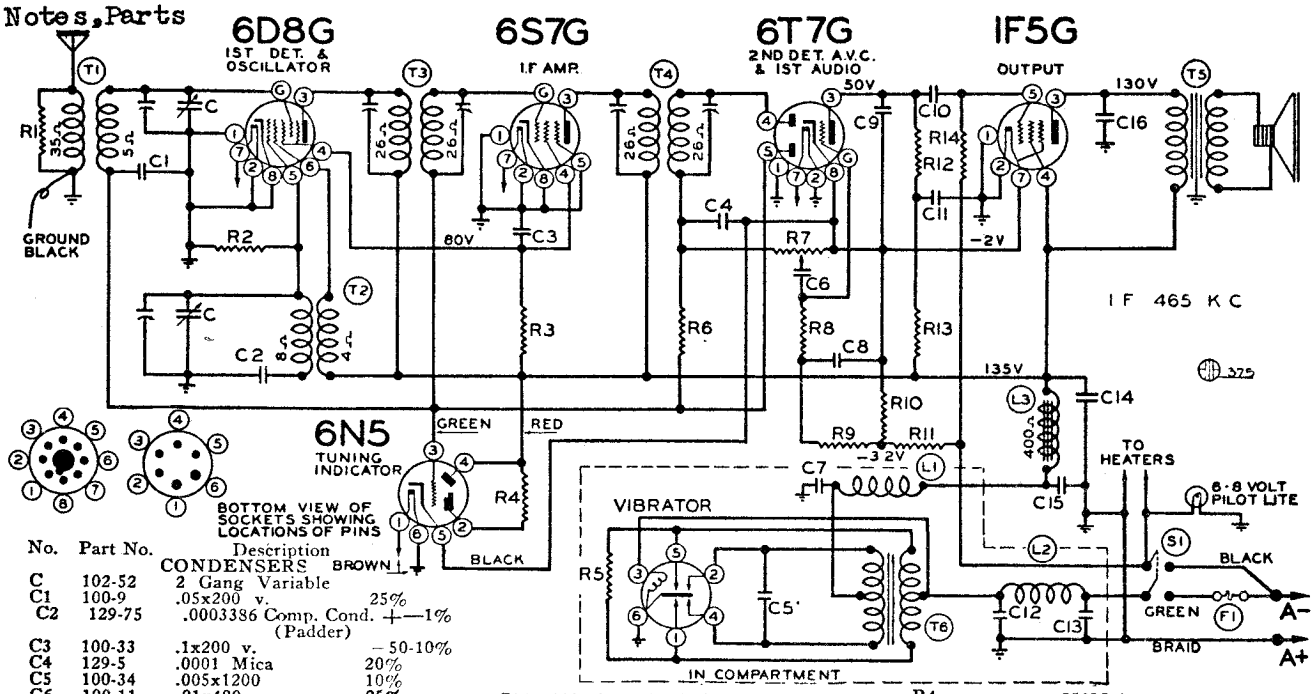

No.	Part No.	Description
		CONDENSERS
C	102-52	2 Gang Variable
C1	100-9	.05x200 v. 25%
C2	129-75	.0003386 Comp. Cond. +—1% (Padder)
C3	100-33	.1x200 v. —50-10%
C4	129-5	.0001 Mica 20%
C5	100-34	.005x1200 10%
C6	100-11	.01x400 25%
C7	100-33	.1x200 —50-10%
C8	100-11	.01x400 25%
C9	129-12	.00025 Mica 20%
C10	100-11	.01x400 25%
C11	100-33	.1x200 v. —50-10%
C12	100-40	.5x200 20%
C13	100-40	.5x200 20%
C14	119-40	5.0 lytic 200 w. v.
C15	119-40	5.0 lytic 200 w. v.
C16	100-37	.003x600 v. 10%
		C14 and C15 in same unit.
		RESISTORS
R1	130-17	10M 1/3 20%
R2	130-12	50M 1/3 20%
R3	130-149	15M 1/3 20%
R4		250M in tuning indicator socket
R5	130-84	200 ohm — 1/3 w. 20%
R6	130-4	3 meg 1/3 20%
R7	101-80	1 meg volume control
R8	130-19	1 meg — 1/3 20%
R9	130-19	1 meg — 1/3 20%
R10	106-40	10 ohm
R11	106-40	21 ohm
R12	130-100	150M ohm—1/3 w. 20%
R13	130-20	100M ohm—1/3 w. 20%
R14	130-19	1 meg — 1/3 w. 20%
		R10 and R11 in same unit.
		PARTS
T1	111-78	Antenna Coil Complete
T2	110-62	Oscillator Coil Complete
T3	108-82B	Input I.F. Coil—465 kc.
T4	108-83B	Output I.F. Coil—465 kc.
T5	114-74	5" P.M. Speaker
T6	104-62D	Power Transformer
L1	105-35	R.F. "B" Choke
L2	105-19	"A" Choke
L3	105-30C	Filter Choke
Vibrator	126-4	Vibrator
F1	131-79	4 amp. fuse (type 3AG)
S1		On Volume Control

TUBES:

The tube complement of this chassis consists of the following Octal Base Glass Tubes:

The type and function of each tube is as follows:

1—Type 6D8G or 6A8G Pentagrid Mixer, First Detector-oscillator.
1—Type 6S7G Remote cut-off R.F. Pentode, I.F. Amplifier (465 K.C.)
1—Type 6T7G Duplex Diode Triode Second Detector, A.V.C. and First Audio.
1—Type 1F5G Output Amplifier.
1—Type 6N5 Cathode-Ray Tuning Eye.

MODEL 62-465

SERVICE NOTES:

Voltage taken from different points of circuit to chassis are measured with volume control full on, all tubes in their sockets and speaker connected, with a volt meter having a resistance of 1000 ohms per volt.

All voltages are to be measured with 6.3 volts input to receiver.

Resistances of coils and transformer windings are indicated in ohms on schematic circuit diagram.

To check for open by-pass condensers, shunt each condenser with another condenser of the same capacity and voltage rating, which is known to be good, until the defective unit is located.

Failure to operate, noisy or weak reception is usually due to defective tubes, the tubes making poor contact with sockets or grid clips making poor contact with the caps of the tubes. Tubes may be checked very easily by replacing with other tubes which are known to be good. If fuse blows out frequently and insulating sleeve has been properly placed over fuse, the trouble is probably in the vibrator, it should be replaced. Do not attempt to make any adjustments on the vibrators.

Excessive hum, stuttering, low volume and a reduction in all D. C. voltages is usually caused by a shorted electrolytic condenser; open by-pass condensers, frequently cause oscillation and distorted tone.

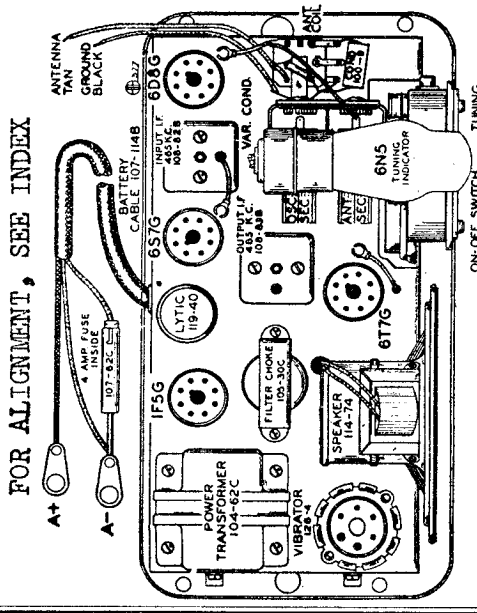

FIG. 1—TOP VIEW

©John F. Rider, Publisher

© John F. Rider, Publisher

MONTGOMERY-WARD & CO.

MODELS 62-473, 62-701 Early Schematic, Voltage, Socket Parts, Coils

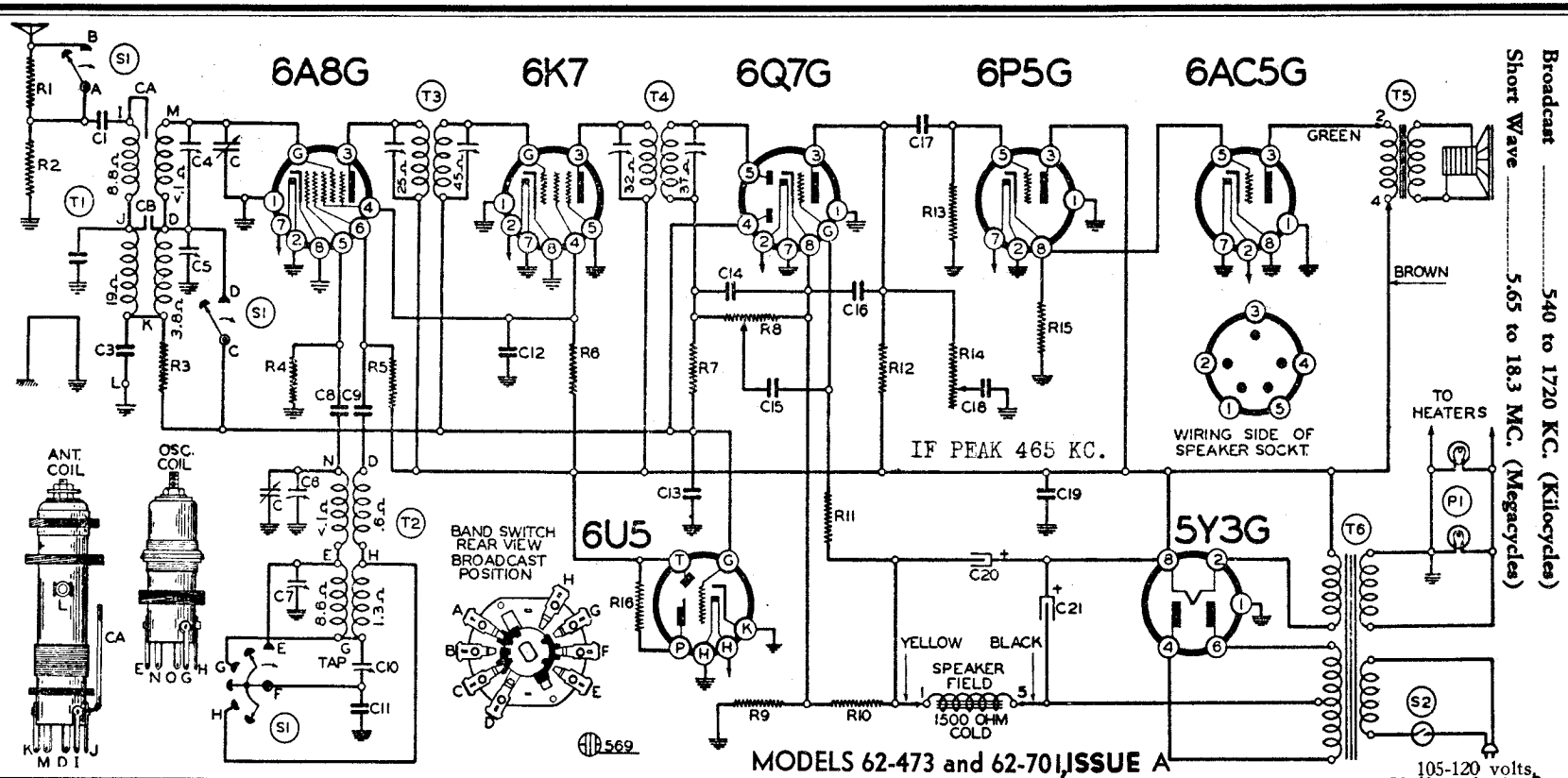

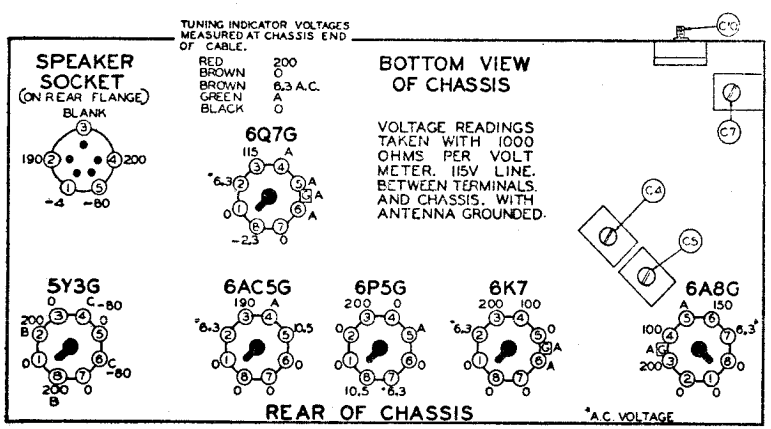

Code No.	Part No.	Description
		RESISTORS
R1	BE13041	800 ohm—½ w.
R2	BE13017	10M ohm—½ w.
R3	BE13020	100M ohm—½ w.
R4	BE13012	50M ohm—½ w.
R5	BE13017	10M ohm—½ w.
R6	BE13021	20M ohm—½ w.
R7	BE1304	3 megohm—½ w.
R8	BE101124	1 megohm volume control
R9	BE130174	50 ohm—½ w.
R10	BE130203	40 ohm—½ w.
R11	BE13019	1 megohm—½ w.
R12	BE1309	200M ohm—½ w.
R13	BE13019	1 megohm—½ w.
R14	BE101125	250M ohm tone control
R15	BE13096	25M ohm—½ w.
R16	BE130148	1 megohm—1/10 w. in tuning indicator socket
		CONDENSERS
Ca		Wire capacitor
Cb		Wire capacitor
C	BE10277	2 gang variable
C1	BE12987	.000105 mica
C2	BE12949	.00009 mica
C3	BE10037	.003 x 600 v.
C4	BE12439B	2-25 mmf. Adj. Cond.
C5	BE12454	2-20 mmf. Adj. Cond.
C6		Trimmer on gang
C7	BE12439E	2-25 mmf. Adj. Cond.
C8	BE12939	.00005 mica
C9	BE10025	.002 x 600 v.
C10	BE12451	350 mmf. w. cap. series pad
C11	BE12993	.00348 comp. type mica
C12	BE1001	.1 x 400 v.
C13	BE10090	.02 x 400 v.
C14	BE1295	.0001 mica
C15	BE10026	.02 x 400 v.
C16	BE1292	.0005 mica
C17	BE10011	.01 x 400 v.
C18	BE10019	.006 x 600 v.
C19	BE10013	.05 x 400 v.
C20	BE11963	12 mfd.—350 w. v. lytic
C21	BE11963	8 mfd.—350 w. v. lytic
	C20 and C21	in same unit
		PARTS
T1	BE11193	BC. SW. Ant. Coil complete
T2	BE11074	BC. SW. Osc. Coil complete
T3	BE108105	Input I. F. Coil complete—465 Kc.
T4	BE108106B	Output I. F. Coil complete—465 Kc.
T5	BE11445	8" Dynamic Speaker
T6	BE104124C	Power Transformer
S1	BE12556	Band Switch
S2		Off-On Switch on tone control
P1	BE10794	6-8 v. Pilot Light (two)

MODELS 62-473,62-701 Late
Schematic,Voltage,Socket
Coils,Parts

MONTGOMERY-WARD & CO.

Broadcast ..... 540 to 1720 KC. (Kilocycles)

Short Wave ..... 5.65 to 18.3 MC. (Megacycles)

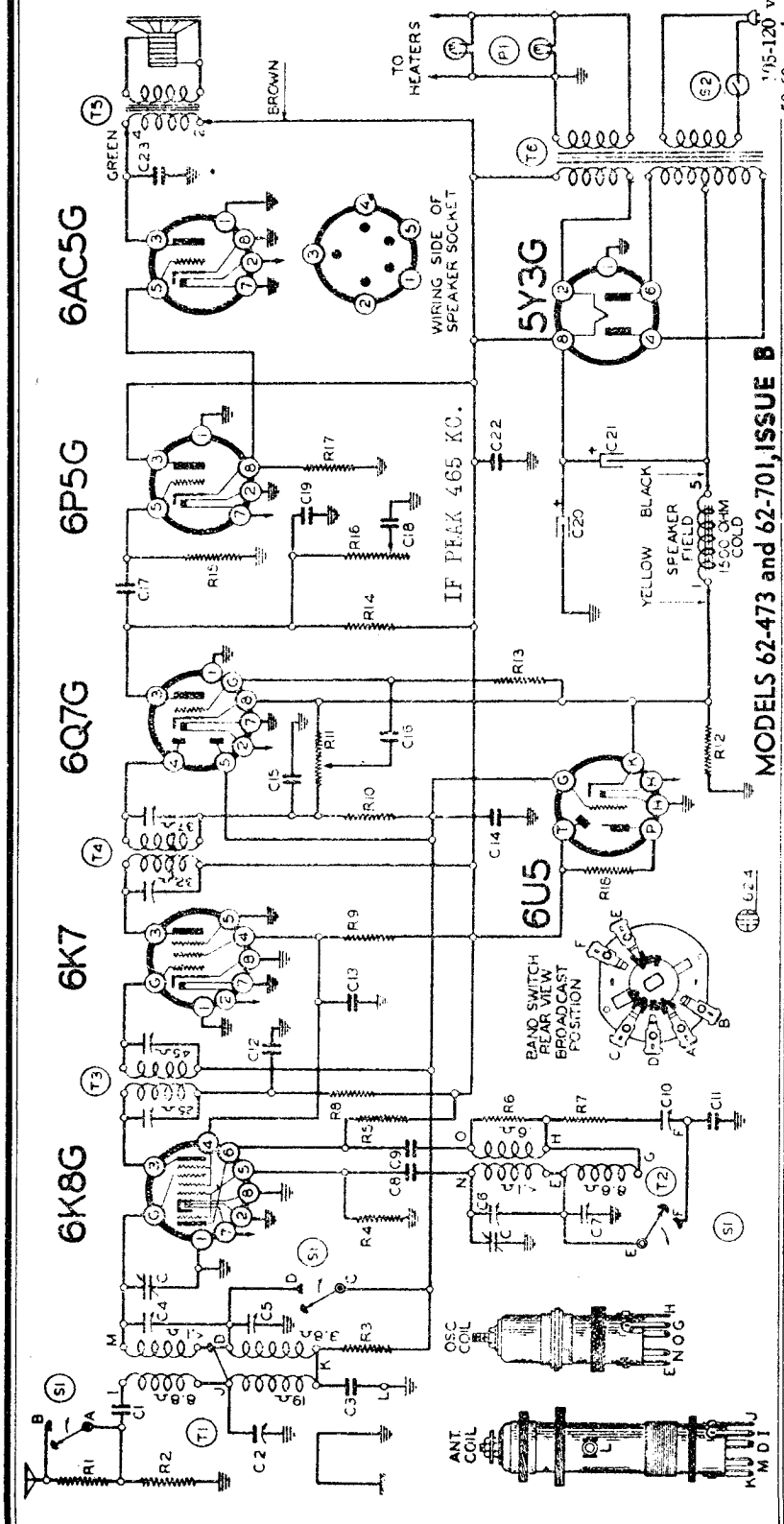

Code No.	Part No.	Description
		RESISTORS
R1	BE130250	800 ohm—¼ w.
R2	BE130249	10M ohm—¼ w.
R3	BE130209	100M ohm—⅓ w.
R4	BE13012	50M ohm—⅓ w.
R5	BE13082	10M ohm—⅓ w.
R6	BE130235	1500 ohm—⅓ w.
R7	BE130210	30 ohm—½ w.
R8	BE13023	2M ohm—⅓ w.
R9	BE130176	20M ohm—⅓ w.
R10	BE1304	3 megohm—⅓ w.
R11	BE101137	Volume Control—1 Megohm
R12	BE130174	50 ohm—½ w.
R13	BE130225	15 megohm—½ w.
R14	BE13019	20M ohm—½ w.
R15	BE13010	1 megohm—⅓ w.
R16	BE101136	Tone Control—250M Ohm
R17	BE13096	25M ohm—½ watt
R18	BE130148	1 megohm—in tuning indicator socket—1/10 w.
		CONDENSERS
C	BE10285	2 gang variable
C1	BE129127	.0001 Ceramic
C2	BE12461	Adjustable Trimmer
C3	BE129128	.0027 Mica
C4	BE12462	Dual Adjustable Trimmer
C5	BE12462	Dual Adjustable Trimmer
C6	BE12463	Dual Adjustable Trimmer
C7	BE12463	Dual Adjustable Trimmer
C8	BE12959	.000050 Mica
C9	BE10025	.002 x 600 v.
C10	BE12460 W. C.	Dual Compression Mica 418 mmf.
C11	BE12460 W. C.	Dual Compression Mica 3490 mmf.
C12	BE10026	.02 x 400 v.
C13	BE1001	.1 x 400 v.
C14	BE10096	.02 x 200 v.
C15	BE1295	.0001 mica
C16	BE10019	.006 x 600 v.
C17	BE10041	.01 x 400 v.
C18	BE10019	.006 x 600 v.
C19	BE1292	.0005 Mica
C20	BE11969	16 mid. lytic
C21	BE11969	16 mid. lytic
C22	BE10013	.05 x 400 v.
C23	BE10019	.006 x 600 v.
		PARTS
T1	BE11193E	BC.—SW. Antenna Coil
T2	BE110898	BC.—SW. Oscillator Coil
T3	BE108122	Input I.F.—465 kc.
T4	BE108106J	Output I.F.—465 kc.
T5	BE11445	8" Dynamic Speaker (1500 ohm field)
T6	BE104124F	Power Transformer—50/60 cycle
S1	BE12566	Band Switch
S2		Off-on switch on tone control
P1	BE10794	6-8 v. Pilot Lights (2)

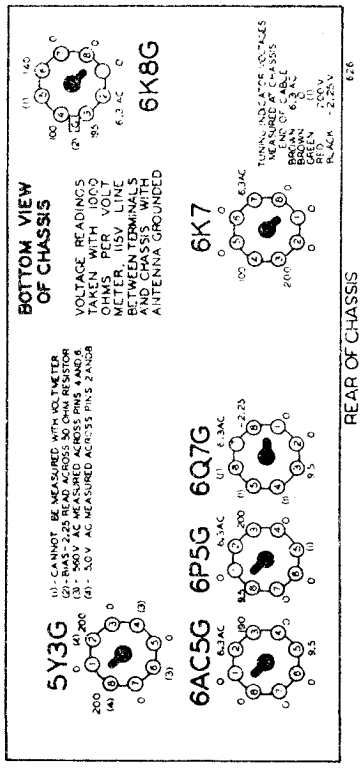

FIG. 3

©John F. Rider, Publisher

MONTGOMERY WARD & CO.

MODELS 62-473,62-701
Early,Late
Trimmers,Alignment

MODELS 62-473 and 62-701 EARLY AND LATE MODELS

DESCRIPTION:

TUBES:

The tube complement of this chassis consists of the following octal base glass and metal tubes:

The type and function of each tube is as follows:

1—Type 6A8G Pentagrid Mixer, First Detector-oscillator.

1—Type 6K7 Remote Cut-Off Pentode, I. F. Amplifier (465 K. C.)

1—Type 6Q7G Duplex Diode Triode Second Detector, A. V. C. and First Audio.

1—Type 6P5G Driver Stage

1—Type 6AC5G Positive Grid Triode Output Amplifier.

1—Type 5Y3G High Vacuum Rectifier.

1—Type 6U5 Cathode-Ray Tuning Eye.

Transformers are available and chassis are sometimes equipped with universal transformers for operation on 25, 40 and 60 cycles and with primary taps for 110, 130, and 230 volts, (see parts list).

SERVICE NOTES:

Voltages taken from different points of circuit to chassis are measured with volume control full on, all tubes in their sockets and speaker connected, with a volt meter having a resistance of 1000 ohms per volt.

All voltages as indicated on the voltage chart are measured with 115 volts on the primary of the power transformer.

ALIGNMENT PROCEDURE

- Volume control—Maximum all adjustments.
- Connect radio chassis to ground post of signal generator with a short heavy lead.
- Connect dummy antenna value in series with generator output lead.
- Connect output meter across primary of output transformer.
- Allow chassis and signal generator to "heat up" for several minutes.

The following equipment is required for aligning:

- An all wave signal generator which will provide an accurately calibrated signal at the test frequencies as listed.
- Output indicating meter.
- Non-metallic screwdriver.
- Dummy antennas—.1 mf., 200 mmf. and 400 ohms.

	BAND	SIGNAL GENERATOR Frequency Setting	Dummy Antenna	Connection to Radio	Position of Band Switch	Variable Condenser Setting	Trimmers Adjusted (in Order Shown)	Trimmer Function	Adjustment
	I. F.	465 Kc.	.1 MFD.	Grid of 6K7	Broadcast (Extreme left rotation)	Rotor full open (Plates out of mesh)	Two trimmers on top (See Fig. 1)	Output I. F.	Adjust to maximum output
		465 Kc.	.1 MFD.	Grid of 6A8	Broadcast (Extreme left rotation)	Rotor full open (Plates out of mesh)	Two trimmers on top (See Fig. 1)	Input I. F.	Adjust to maximum output
EARLY MODEL	SHORT WAVE BAND	17 Mc.	400 ohms	Antenna lead	Short Wave (Extreme right rotation)	Set Dial at 17 MC	Trimmer (C 6) Top of rear section of gang	Short Wave oscillator	Adjust to maximum output
		17 Mc.	400 ohms	Antenna lead	Short Wave (Extreme right rotation)	Dial Set at 17 MC	Trimmer (C 4) (See Fig. 3)	Short Wave antenna	Adjust to maximum output
	BROADCAST BAND	1720 Kc.	200 mmf.	Antenna lead	Broadcast (Extreme left rotation)	Rotor full open (Plates out of mesh)	Trimmer (C 7) (See Fig. 3)	Broadcast oscillator	Adjust to maximum output
		1400 Kc.	200 mmf.	Antenna lead	Broadcast (Extreme left rotation)	Set Dial at 1400 Kc.	Trimmer (C 5) (See Fig. 3)	Broadcast antenna	Adjust to maximum output
		600 Kc.	200 mmf.	Antenna lead	Broadcast (Extreme left rotation)	Set Dial at 600 Kc.	Trimmer (C 10) (See Fig. 3)	Broadcast oscillator series pad	Adjust to maximum rock dial. (See note "A")
	IMAGE REJECTION ADJUSTMENTS	2100 Kc.	200 mmf.	Antenna lead	Broadcast (Extreme left rotation)	Pick up signal at 1170 Kc. on dial	Wire Capacitor (CB) (See circuit diagram)	Image rejection	Adjust by twisting for minimum output. (See note "B")
		2630 Kc.	200 mmf.	Antenna lead	Broadcast (Extreme left rotation)	Pick up signal at 1700 Kc. on dial	Wire capacitor (CA) (See circuit diagram)	Image rejection	Adjust by twisting for minimum output. (See note "C")
	I. F.	465 Kc.	.1 MFD.	Grid of 6K7	Broadcast (Extreme left rotation)	Rotor full open (Plates out of mesh)	Two trimmers on top (See Fig. 1)	Output I. F.	Adjust to maximum output
		465 Kc.	.1 MFD.	Grid of 6K8	Broadcast (Extreme left rotation)	Rotor full open (Plates out of mesh)	Two trimmers on top (See Fig. 1)	Input I. F.	Adjust to maximum output
LATE MODEL	SHORT WAVE BAND	17 Mc.	400 ohms	Antenna lead	Short Wave (Extreme right rotation)	Set Dial at 17 MC	Trimmer (C 6) Top of Chassis (See Fig. 1)	Short Wave oscillator	Adjust to maximum output
		17 Mc.	400 ohms	Antenna lead	Short Wave (Extreme right rotation)	Dial Set at 17 MC	Trimmer (C 4) (See Fig. 1)	Short Wave antenna	Adjust to maximum output
	BROADCAST BAND	1720 Kc.	200 mmf.	Antenna lead	Broadcast (Extreme left rotation)	Rotor full open (Plates out of mesh)	Trimmer (C 7) (See Fig. 1)	Broadcast oscillator	Adjust to maximum output
		1400 Kc.	200 mmf.	Antenna lead	Broadcast (Extreme left rotation)	Set Dial at 1400 Kc.	Trimmer (C 5) (See Fig. 1)	Broadcast antenna	Adjust to maximum output
		600 Kc.	200 mmf.	Antenna lead	Broadcast (Extreme left rotation)	Set Dial at 600 Kc.	Trimmer (C 10) (See Fig. 1)	Broadcast oscillator series pad	Adjust to maximum rock dial. (See note "A")
	IMAGE REJECTION ADJUSTMENTS	2330 Kc.	200 mmf.	Antenna lead	Broadcast (Extreme left rotation)	Pick up signal at 1400 kc. on dial	Trimmer (C2) (See Fig. 1)	Image rejection	Adjust for minimum output. (See note "B")

NOTE "A" Turn the dial back and forth slightly (rock) and adjust trimmer until the peak of greatest intensity is obtained.

NOTE "B" 2100KC is the image frequency of 1170KC. Adjust wire capacity (CB) by twisting the two wires until a **minimum** output is obtained.

NOTE "C" 2630KC is the image frequency of 1700KC. Adjust wire capacity (CA) by moving the wire either toward or away from the antenna coil winding until a **minimum** output is obtained on the output meter.

Attenuate the signal from the signal generator to prevent the leveling-off action of the AVC.

After each range is completed, repeat the procedure as a final check.

BAND SWITCH	BAND	FREQUENCY RANGE
Extreme Right Rotation	Short Wave	5.65 to 18.3 MC.
Extreme Left Rotation	Broadcast	535 to 1720 KC.

Power Consumption.....45 Watts (At 115 volts 50-60 cycles)
Power Output.....1.6 Watts Undistorted, 3 Watts Maximum
Selectivity.....58 KC. Broad at 1000 KC. 1000 Times Signal Strength
Intermediate Frequency.....465 KC.

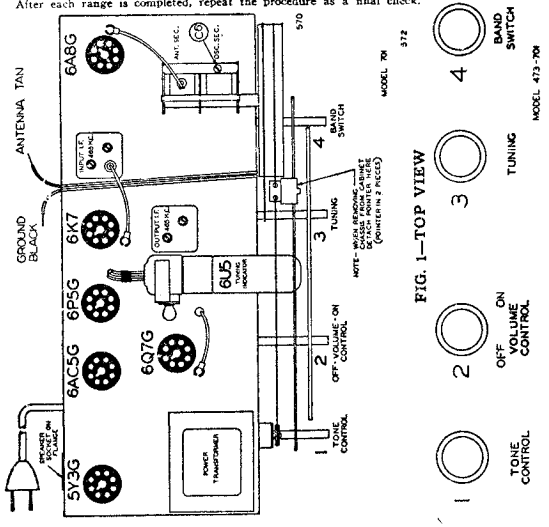

FIG. 1—TOP VIEW EARLY MODEL

FIG 2—FRONT VIEW EARLY MODEL

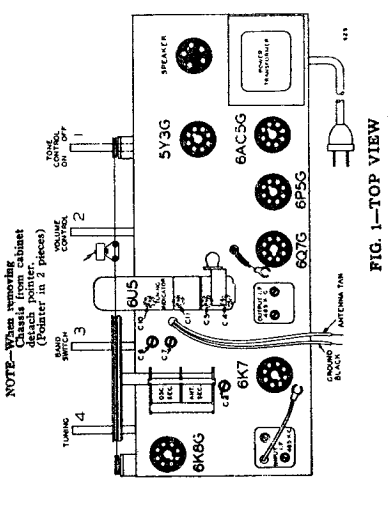

FIG. 1—TOP VIEW

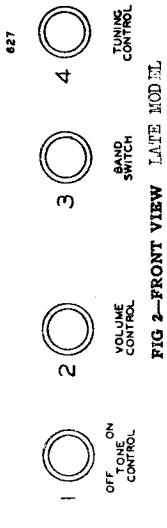

FIG 2—FRONT VIEW LATE MODEL

©John F. Rider, Publisher

MODELS 62-476, 62-606, 62-616
Schematic, Socket, Trimmers
Alignment, Parts, Voltage

MONTGOMERY WARD & CO.

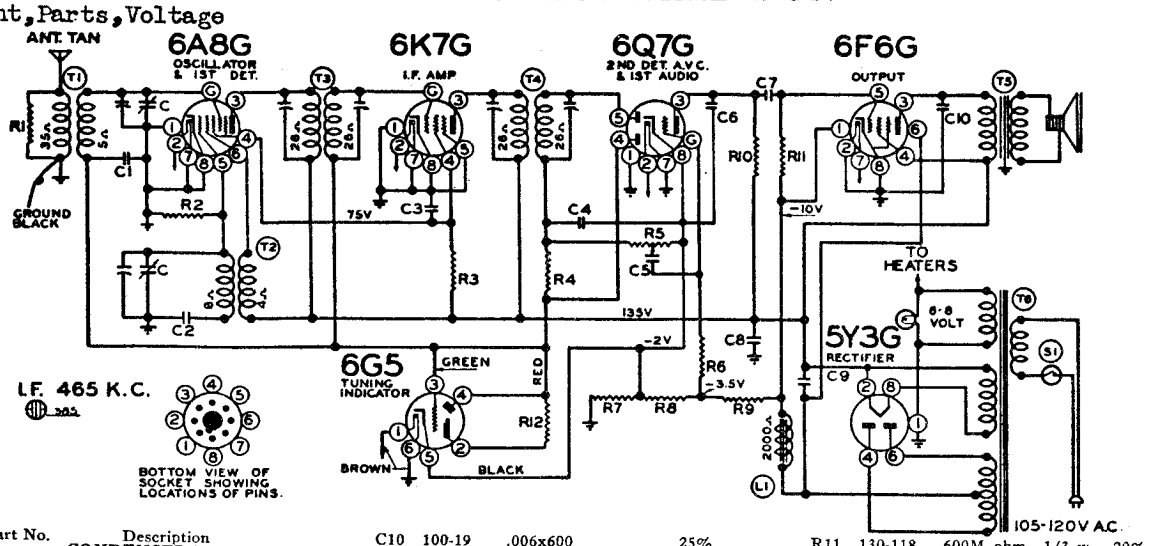

No.	Part No.	Description
		CONDENSERS
C	102-52	2 Gang Variable
C1	100-9	.05x200 25%
C2	129-75	.0003386—1%—compression type mica padder
C3	100-1	.1x400 50-10%
C4	129-5	.0001 Mica 20%
C5	100-11	.01x400 25%
C6	129-2	.0005 Mica 20%
C7	100-11	.01x400 25%
C8	119-38	5.0x200 wv. lytic
C9	119-38	5.0x250 wv. lytic
C10	100-19	.006x600 25% C8 and C9 in one unit
		RESISTORS
R1	130-17	10M ohm—1/3 w. 20%
R2	130-12	50M ohm—1/3 w. 20%
R3	130-149	15M ohm—1/3 w. 20%
R4	130-170	3 megohm—1/3 w. 25%
R5	101-77	1 megohm volume control
R6	130-170	3 megohm—1/3 w. 25%
R7	106-35	65 ohm
R8	106-35	45 ohm
R9	106-35	220 ohm
R10	130-9	200M ohm—1/3 w. 20%
R11	130-118	600M ohm—1/3 w. 20%
R12		500M ohm—in tuning indicator socket
		R7, R8 and R9 in one unit
		PARTS
T1	111-78	Antenna Coil Complete
T2	110-62	Oscillator Coil Complete
T3	108-82B	Input I.F. Complete
T4	108-83B	Output I.F. Complete
T5	114-72	5" Dynamic Speaker
T6	104-100	Power Transformer
L1		Speaker Field (2000 ohm)
S1		Switch on Volume Control

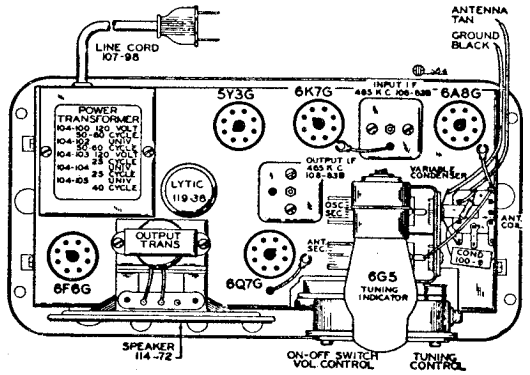

6 TUBE INCLUDING CATHODE-RAY TUNING EYE

Broadcast Band A.C. Superheterodyne Receiver

Frequency Range — 535 - 1720 Kilocycles

RESONANCE INDICATOR:

Use as a resonance indicator an output meter connected across the primary of the speaker input transformer, or by means of an adapter between the plate and screen terminals of the type 6F6G output tube. Maximum deflection of the meter indicates resonance. Use only enough signal to get a readily readable output. A low range output meter or the low scale of a multi-range meter should be used.

Transformers are available and chassis are sometimes equipped with universal transformers for operation on 25, 40 and 60 cycles and with primary taps for 108, 127, 150, 225, and 260 volts, (see instructions) and also sometimes equipped with 25 cycle transformers with 105-115 volt or 220 volt primaries, not universals.

SERVICE NOTES:

Voltages taken from different points of circuit to chassis are measured with volume control full on, all tubes in their sockets and speaker connected, with a volt meter having a resistance of 1000 ohms per volt.

All voltages as indicated on diagram are measured with 115 volts on the primary of the power transformer.

Resistances of coil windings are indicated in ohms on the schematic circuit diagram.

To check for open by-pass condensers, shunt each condenser with another condenser of the same capacity and voltage rating, which is known to be good, until the defective unit is located.

Excessive hum, stuttering, low volume and a reduction in all D.C. voltages is usually caused by a shorted electrolytic condenser; open by-pass condensers frequently cause oscillation and distorted tone.

ALIGNING INSTRUCTIONS:

CAUTION:—No aligning adjustments should be attempted without first thoroughly checking over all other possible causes of trouble, such as poor installations, open or grounded antenna systems, low line voltages, defective tubes, condensers and resistors. In order to properly align this chassis, an oscillator (generator) is absolutely necessary. No aligning adjustments should be attempted with the chassis in the cabinet.

ALIGNING I.F. TRANSFORMERS: (465 K.C.):

Part No. 108-83B Output I.F. Transformer
Part No. 108-82B Input I.F. Transformer

These I.F. transformers have two adjustments, both of which are accessible from the top of chassis (see Fig. 1).

1. With volume control full on (the extreme right of its rotation), and with the variable condenser set to approximately 1400 kilocycles, make the following adjustments:
   (a) Connect external oscillator set at 465 kilocycles, in series with .1 mfd. condenser, to the control grid cap of the type 6K7G tube, and adjust the output I.F. transformer (No. 108-83B) to resonance.
   (b) Move oscillator output clip from grid of 6K7G to grid of 6A8G and adjust input I.F. transformer (No. 108-82B) to resonance.
   (c) With oscillator still connected to 6A8G, readjust output I.F. transformer (108-83B) if necessary.

R.F. ALIGNMENT: (535-1720 K.C.)

1. With gang condenser in its minimum capacity position, plates entirely out of mesh, connect an external oscillator in series with a 200 mmf. condenser to the antenna lead and chassis ground and make the following adjustments:
   (a) With external oscillator set at 1720 kilocycles, adjust oscillator trimmer to resonance. This adjustment is on the top of rear section of variable gang condenser. (See Fig. 1).
   (b) Re-set external oscillator to 1400 kilocycles, rotate condenser, pick up oscillator signal and adjust antenna trimmer to resonance. (Top of front section of gang condenser).
   (c) Check sensitivity at 600 and 1000 kilocycles.

©John F. Rider, Publisher

MONTGOMERY WARD & CO.

MODEL 62-479
Schematic, Voltage
Socket

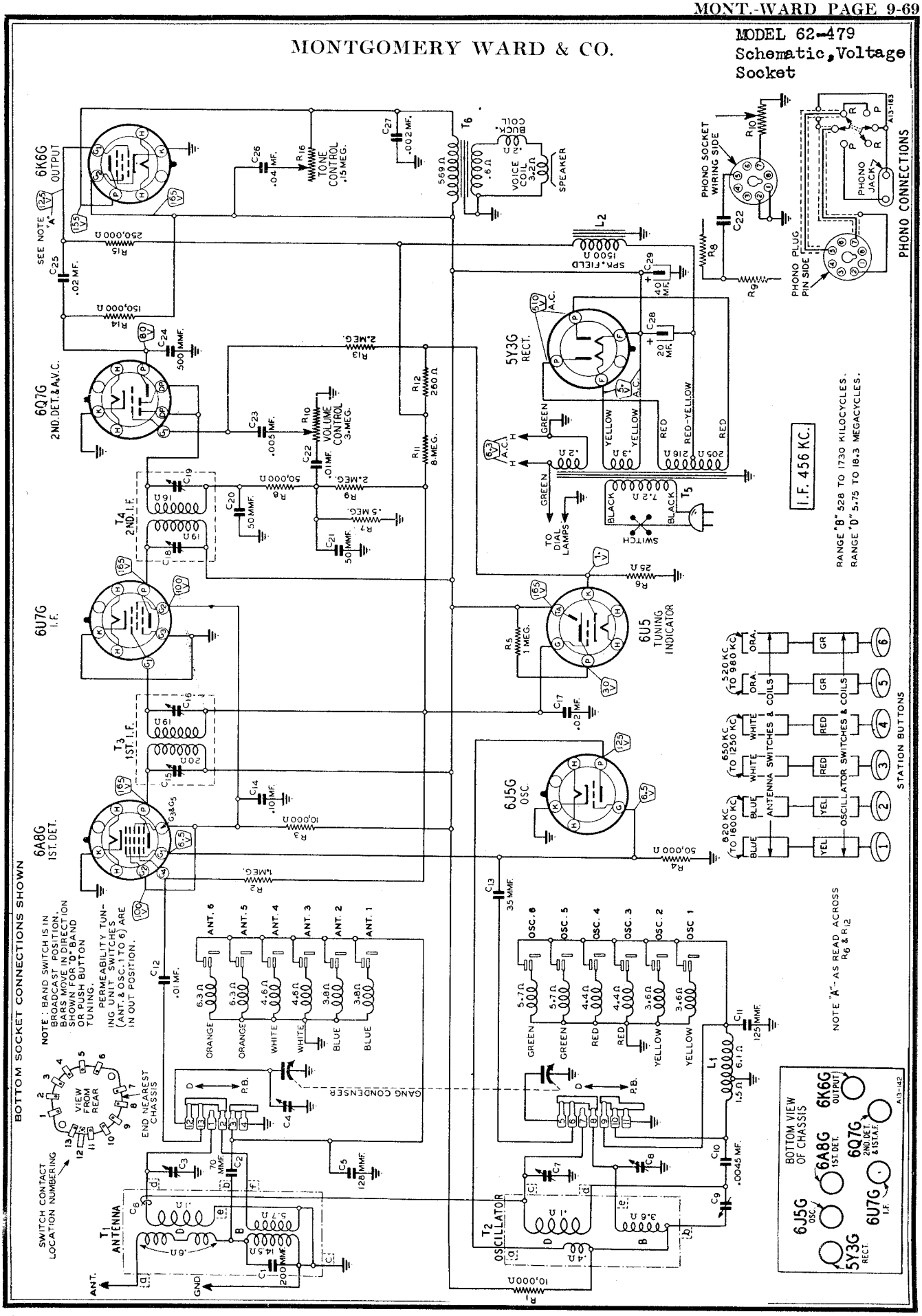

©John F. Rider, Publisher

MODEL 62-479
Trimmers, Coils
Alignment, Specifications

MONTGOMERY WARD & CO.

Power Consumption - 50 Watts (At 117 volts 60 cycles)
Power Output - - - - - - - 1.0 Watts Undistorted, 2.0 Watts Maximum
Selectivity - - 38 KC Broad at 1000 times Signal
Sensitivity
B Range (Manual Tuning).....15 Microvolts Average
B Range (Automatic Tuning).....15 Microvolts Average
D Range .....25 Microvolts Average

Intermediate Frequency - - - - - - - 456 KC
Speaker - - - - - - - - - 6" or 8" Dynamic
Tuning Frequency Range
B Range (Manual Tuning).... 528 to 1730 KC (Kilocycles)
D Range (Manual Tuning)....5750 to 18300 KC (Kilocycles)
Buttons 1 and 2 (Automatic Tuning).....820 to 1600 KC
Buttons 3 and 4 (Automatic Tuning).....650 to 1250 KC
Buttons 5 and 6 (Automatic Tuning)..... 520 to 980 KC

ALIGNMENT PROCEDURE

Volume Control—Maximum All Adjustments.

Connect Radio Chassis to Ground Post of Signal Generator with a Short Heavy Lead.

Allow Chassis and Signal Generator to "Heat Up" for several minutes.

The following equipment is required for aligning:
An All Wave Signal Generator which will provide an accurately calibrated signal at the test frequencies as listed.
Output Indicating Meter—Non-Metallic Screwdriver.
Dummy Antennas—.1 mf., 200 mmf., and 400 ohms.

SIGNAL GENERATOR FREQUENCY SETTING	CONNECTION AT RADIO	DUMMY ANTENNA	BAND SWITCH	CONDENSER SETTING	ADJUST TRIMMERS TO MAXIMUM
I. F.					
456 KC	Grid of 1st Det.	.1 mf.	B Range	Turn Rotor to Full Open	1st I.F. (C15) & (C16) 2nd I.F. (C18) & (C19)
RANGE B					
1730 KC	Antenna Lead	200 mmf.	B Range	Turn Rotor to Full Open	Oscillator Range B (C8)
1500 KC	Antenna Lead	200 mmf.	B Range	Turn Rotor to Max. Output Set Indicator to 1500 KC— See Note A	Ant. Range B (C4)
600 KC	Antenna Lead	200 mmf.	B Range	Turn Rotor to Max. Output	600 KC (C9) Rock Rotor—See Note B
RANGE D					
18,300 KC	Antenna Lead	400 Ohm	D Range	Turn Rotor to Full Open	Oscillator Range D (C7)
15,000 KC	Antenna Lead	400 Ohm	D Range	Turn Rotor to Max. Output	Ant. Range D (C3) Rock Rotor—See Note B

PERMEABILITY TUNING UNIT			BUTTON DEPRESSED (Band Switch in Push Button Position)	TURN SETTING SCREW TO MAXIMUM OUTPUT —See Instruction Book	ADJUST COIL POSITION TO MAXIMUM OUTPUT —See Note C
1100 KC	Antenna Lead	200 mmf.	No. 1	Setting Screw No. 1	Antenna Coil No. 1
1100 KC	Antenna Lead	200 mmf.	No. 2	Setting Screw No. 2	Antenna Coil No. 2
850 KC	Antenna Lead	200 mmf.	No. 3	Setting Screw No. 3	Antenna Coil No. 3
850 KC	Antenna Lead	200 mmf.	No. 4	Setting Screw No. 4	Antenna Coil No. 4
700 KC	Antenna Lead	200 mmf.	No. 5	Setting Screw No. 5	Antenna Coil No. 5
700 KC	Antenna Lead	200 mmf.	No. 6	Setting Screw No. 6	Antenna Coil No. 6

Attenuate the signal from the signal generator to prevent the leveling-off action of the AVC.

After each range is completed, repeat the procedure as a final check.

NOTE A—If the pointer is not at 1500 KC on the dial, loosen the 2 clamps which hold the pointer assembly on the cord, move the pointer to the 1500 KC mark, and tighten the clamps.

NOTE B—Turn the rotor back and forth and adjust the trimmer until the peak of greatest intensity is obtained.

NOTE C—At the top of the permeability tuning unit can be seen six "W" openings. Insert the end of a pair of long nose pliers or a screwdriver in the "W" opening of the proper button and adjust the position of the antenna (rear) coil by twisting the pliers or screwdriver until maximum output is obtained.

CAUTION—When aligning the short wave band be sure NOT to adjust at the image frequency. This can be checked as follows: Let us say the signal generator is set for 15,000 KC. The signal will then be heard at 15,000 on the dial of the radio. The image signal, which is much weaker, will be heard at 15,000 less 912 KC, or 14,088 KC on the dial. It may be necessary to increase the input signal to hear the image.

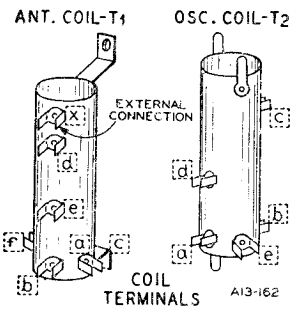

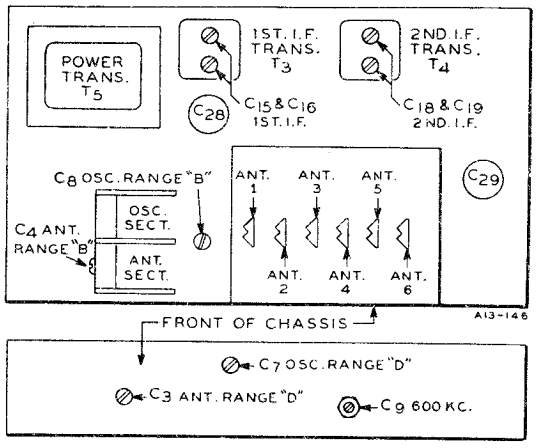

©John F. Rider, Publisher

MONTGOMERY WARD & CO.

MODEL 62-500
Schematic, Socket Parts

Broadcast.....535 to 1720 K. C. (Kilocycles)
Short Wave.....5.5 to 18.1 M. C. (Megacycles)

FIG. 1—TOP VIEW

FIG. 2—FRONT VIEW

CA Broadcast Antenna Trimmer on Gang CB Short Wave Oscillator Trimmer on Gang CC Broadcast Oscillator Trimmer on Gang

LIST OF REPAIR PARTS (Serial No. 7M917950 and up)

USE ONLY GENUINE FACTORY REPLACEMENT PARTS

Bin No.	Part No.	Schematic Reference	Description	No. used in set	Selling price each
			CONDENSERS		
10979	BE100-1	C9	.1 x 400 Volt Tubular Condenser	1	.10
11387	BE100-9	C4,C10	.05 x 200 Volt Tubular Condenser	2	.10
11256	BE100-11	C12	.01 x 400 Volt Tubular Condenser	1	.09
10949	BE100-13	C18	.05 x 400 Volt Tubular Condenser	1	.10
10925	BE100-19	C21	.006 x 600 Volt Tubular Condenser	1	.09
10929	BE100-20	C15,C16	.1 x 200 Volt Tubular Condenser	2	.10
11106	BE100-22	C3	.05 x 200 Volt Tubular Condenser	1	.10
10934	BE100-25	C6	.002 x 600 Volt Tubular Condenser	1	.09
11490	BE100-26	C14	.02 x 400 Volt Tubular Condenser	1	.10
10888	BE100-71	C17	.004 x 600 Volt Tubular Condenser	1	.10
10909	BE119-38C	C19,C20	Dual 5 MFD Electrolytic Filter	1	.70
	BE124-38	C7	Series Padder Condenser	1	.20
10930	BE124-39	C2	Adjustable Trimmer Condenser (2-20mmf)	1	.10
	BE129-2	C13	.0005 Mica Type Condenser — 20%	1	.09
	BE129-3	C5	.00002 Mica Type Condenser — 20%	1	.09
11335	BE179-5	C1	.0001 Mica Type Condenser — 20%	1	.10
10625	BE129-39	C11	.00005 Mica Type Condenser — 20%	1	.25
10932	BE129-54	C8	.003 Mica Type Condenser — 2½%	1	
			RESISTORS		
11350	BE130-3	R16	500M Ohm - 1/3 Watt - 20% - Carbon	1	.08 11359
11116	BE130-4	R8,R10	3 Meg Ohm - 1/3 Watt - 20% - Carbon	2	.08 11212
11097	BE130-9	R11	200M Ohm - 1/3 Watt - 20% - Carbon	1	.08 11360
11277	BE130-46	R14	800M Ohm - 1/3 Watt - 10% - Carbon	1	.08 11363
11168	BE130-70	R1	500 Ohm - 1/3 Watt - 10% - Carbon	1	.08
11123	BE130-79	R2	400 Ohm - 1/3 Watt - 10% - Carbon	1	.08
11094	BE130-80	R13	150M Ohm - 1/3 Watt - 10% - Carbon	1	.08
11065	BE130-82	R4,R5	10M Ohm - 1/3 Watt - 10% - Carbon	2	.08
11045	BE130-94	R3	50M Ohm - 1/3 Watt - 10% - Carbon	1	.08
11060	BE130-176	R12	20M Ohm - 1/3 Watt - 10% - Carbon	1	.08
	BE130-200	R7	700 Ohm - 1/3 Watt - 10% - Carbon	1	.08
	BE130-171	R6	500M Ohm 1/10 Watt (in tuning eye socket)	1	.08
			COILS		
	BE108-105F	T3	Input I.F. Coil Assembly complete with can	1	.75
	BE108-106D	T4	Output I.F. Coil Assembly complete with can	1	.75
	BE110-66B	T2	Broadcast Oscillator Trimmer on Gang	1	.40
	BE111-83	T1	Antenna Coil Assembly complete with can	1	.60
			SOCKETS		
	BE121-8		Five Prong Socket - Marked "SPKR"	1	.08
	BE121-15		Five Prong Octal Socket - Marked "5Y3"	1	.08
	BE121-18		Seven Prong Octal Socket - Marked "6L7"	1	.10
	BE121-21		Eight Prong Octal Socket - Marked "6Q7"	1	.10
	BE121-22		Eight Prong Octal Socket - Marked "6K7"	1	.10
	BE121-86		Eight Prong Octal Socket - Marked "6K6"	1	.10
	BE121-89		Seven Prong Octal Socket - Marked "6J5"	1	.10
			TRANSFORMERS		
	BE104-109C	T6	Power Transformer 50/60 Cycle, 105-120 Volt	1	1.50
	BE104-108C		Power Transformer 25 Cycle, 105-120 Volt		
	BE104-104C		Universal Transformer 25 Cycle Primary		
	BE104-99D		Universal Transformer 40 Cycle Primary		
			SPEAKER		
	BE114-61A	T5	Six Inch Dynamic Speaker (Field 2000 Ohms)	1	2.70
			MISCELLANEOUS		
	BE101-95	R9,S2	Volume Control and Switch (1 Meg Ohm)	1	.50
	BE101-96	R15	Tone Control (1 Meg Ohm)	1	.36
	BE102-59	C	Two Gang Variable Condenser	1	1.50
	BE107-51D		Line Cord and Plug	1	.24
	BE124-38	C7	Series Padder Condenser	1	.20
	BE124-39	C2	Adjustable Trimmer Condenser	1	.10
	BE125-38	S1	Band Change Switch	1	.30
	BE104-128		"Volume" Knob (Spring Type)	1	.08
			"Tone" Knob (Spring Type)	1	.08
	BE128-45		"Band Switch" Knob (Spring Type)	1	.08
	BE128-46		"Tuning" Knob (Spring Type)	1	.08
	BE128-47		**PHONOGRAPH PARTS LIST**		
	BE104-128		Motor Complete with Metal Mounting Plate, Turntable, and Mounting Screws Washers, Etc.	1	9.50
	BE107-138		Phono Connector Cable	1	.30
	BE107-145		Motor Connector Cable	1	.12
	BE115-102		Needle Cup (Copper Oxide Finish)	2	.06
	BE115-103		Cover For One Needle Cup	1	.04
	BE114-100		Pick-up Arm and Cable	1	4.90
	BE112-335		Phono-Radio Indicator Plate	1	.10
	BE117-209		Bracket; Rest for Pickup Arm	1	.10
	BE125-41	S3	Phono-Radio Switch	1	.50
	BE128-109B		Knob for Phono-Radio Switch	1	.08
			DIAL PARTS LIST		
	BE107-90		Pilot Light Shield	2	.01
11122	BE107-94	P1	6.3 Volt Pilot Light T-44	2	.08
	BE107-121		Pilot Light Socket and Bracket	2	.06
	BE112-333		Dial Drive Assembly Complete	1	1.40
10195	BE112-334		Dial Scale (Calibrated)	1	.30
10192	BE112-353		Oval Escutcheon Complete (for Dial)	1	1.00
			CATHODE RAY TUNING EYE PARTS		
	BE107-83	R6	Cable and Socket Assembly with 500M Ohm Resistor	1	.40
	BE115-65		Paper Shield for Tuning Eye	1	.01
11072	BE117-57B		Clamp and Wing Bolt for Eye Socket	1	.15

Note: Speakers cannot be ordered, defective speakers must be repaired.

All resistors and mica condensers are RMA color coded—specify value and/or resistor or condenser (per schematic diagram) and model number.

Mica condensers are coded with an additional dot indicating tolerance:

Tolerance Percent	Color of Dot
2½%	White
5%	Green
10%	Blue
15%	Yellow
20%	Red
More than—20%	None

When ordering parts, always specify part and model number as well as serial number of chassis.

When ordering condensers, specify part number, tolerance and/or schematic reference number.

7820 28 12-37

©John F. Rider, Publisher

©John F. Rider, Publisher

MODELS 62-506 AND 62-516

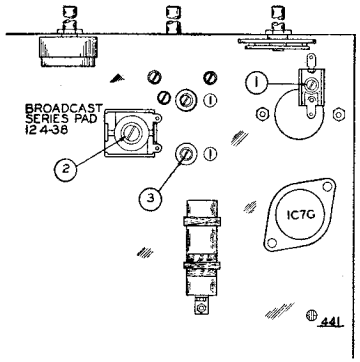

FIG. 3.—BOTTOM VIEW SHOWING TRIMMERS

RESONANCE INDICATOR:

Use as a resonance indicator an output meter connected across the primary of the speaker input transformer, or by means of an adapter between the plate and plate terminals of the type 1H4G output tubes. Maximum deflection of the meter indicates resonance. Use only enough signal to get a readily readable output. A low range output meter or the low scale of a multi-range meter should be used.

DUMMY ANTENNAS:

The following dummy antennas are used in aligning and are referred to in the following alignment instructions as "Dummy 1", "Dummy 2", and "Dummy 3"

Dummy 1: (I.F.)—Consists of a .1 mfd. condenser connected in series with the external oscillator.

Dummy 2: (Broadcast)—Consists of a 200 mmfd. condenser and a 20 ohm resistor connected in series with each other and in series with the external oscillator.

Dummy 3: (Short Wave)—Consists of a .1 mfd. condenser and a 400 ohm resistor connected in series with each other and in series with the external oscillator.

ALIGNING I.F. TRANSFORMERS: (465 K.C.):

Part No. 108-111 Input I. F. Transformer
Part No. 108-112 Output I. F. Transformer

These I. F. transformers have two adjustments, both of which are accessible from the top of chassis (see Fig. 1, top view).

1. With volume control full on, (the extreme right of its rotation), the band changing switch in the broadcast position, (extreme left of its rotation), and with the variable condenser set to approximately 1400 kilocycles, make the following adjustments:

   (a) Connect external oscillator set at 465 kilocycles, in series with "Dummy 1", to the control grid cap of the type 1D5G I. F. tube, and adjust the output I.F. transformer (No. 108-112) to resonance.

   (b) Move oscillator to grid cap of 1C7G oscillator, first detector tube and adjust input I.F. transformer (No. 108-111) to resonance.

SHORT WAVE BAND ALIGNMENT:

5.5 to 18.1 Megacycles

1. With band changing switch in the short wave position, extreme right of its rotation, and with external oscillator set at 17 megacycles and connected in series with "Dummy 3" to the antenna and ground leads, make the following adjustments:

   (a) Move dial pointer to 17 megacycles and adjust short wave oscillator trimmer to resonance.

   This adjustment is the trimmer mounted on the top of rear section of the variable gang condenser (see Fig. 1, top view).

   (b) Adjust short wave antenna trimmer (Adjustment Number 1), to resonance (see Fig. 3, bottom view).

BROADCAST BAND ALIGNMENT:

535 to 1720 Kilocycles

1. With band changing switch in the broadcast position, extreme left of its rotation, and with gang condenser in its minimum capacity position, plates entirely out of mesh, and with external oscillator connected in series with "Dummy 2" to antenna and ground leads make following adjustments:

   (a) Set external oscillator to 1720 K.C. and adjust broadcast oscillator trimmer to resonance. (Adjustment number 3), (see bottom view of Chassis, Fig. 3).

   (b) Re-set external oscillator to 600 K.C., and adjust broadcast series pad (adjustment number 2), to resonance by rotating condenser to approximately 600 K.C., rocking it slowly to and fro until by adjusting series pad maximum output is attained. This adjustment is located on the bottom of the chassis directly under the variable gang condenser. (See bottom view of chassis, Fig. 3.)

   (c) Repeat adjustments "a" and "b" until sensitivity is at its maximum.

   (d) Check for tracking and sensitivity at 1400, 1000, and 600 kilocycles. **Under no circumstances bend plates of variable condenser sections to correct tracking.**

DESCRIPTION: MODEL 62-500

TUBES:

The tube complement of this chassis consists of the following octal base glass and Metal Tubes:

The type and function of each tube is as follows:
1—Type 6L7G Pentagrid Mixer, First Detector.
1—Type 6J5G Oscillator.
1—Type 6K7 Remote Cut-Off Pentode, I.F. Amplifier (465 K.C.)
1—Type 6Q7G Duplex Diode Triode Second Detector, A.V.C. and First Audio.
1—Type 6K6G Pentode Output Amplifier.
1—Type 5Y3G High Vacuum Rectifier.
1—Type 6G5 Cathode-Ray Tuning Eye.

Transformers are available and chassis are sometimes equipped with universal transformers for operation on 25, 40 and 60 cycles and with primary taps for 110, 130, and 230 volts, (see parts list).

SERVICE NOTES:

Voltages taken from different points of circuit to chassis are measured with volume control full on, all tubes in their sockets and speaker connected, with a volt meter having a resistance of 1000 ohms per volt.

All voltages as indicated on diagram are measured with 115 volts on the primary of the power transformer.

Resistances of coil windings are indicated in ohms on the schematic circuit diagram.

To check for open by-pass condensers, shunt each condenser with another condenser of the same capacity and voltage rating, which is known to be good, until the defective unit is located.

Excessive hum, stuttering, low volume and a reduction in all D.C. voltages is usually caused by a shorted electrolytic condenser; open by-pass condensers frequently cause oscillation and distorted tone.

ALIGNING INSTRUCTIONS:

CAUTION:—No aligning adjustments should be attempted without first thoroughly checking over all other possible causes of trouble, such as poor installations, open or grounded antenna systems, low line voltages, defective tubes, condensers and resistors. In order to properly align this chassis, an oscillator (generator) is absolutely necessary. No aligning adjustments should be attempted with the chassis in the cabinet. Remove the knobs and the four bolts which are used to fasten the chassis.

All adjustments should be made with a non-metallic screwdriver.

RESONANCE INDICATOR:

Use as a resonance indicator an output meter connected across the primary of the speaker input transformer, or by means of an adapter between the plate and screen terminals of the type 6K6G output tube. Maximum deflection of the meter indicates resonance. Use only enough signal to get a readily readable output. A low range output meter or the low scale of a multi-range meter should be used.

DUMMY ANTENNAS:

The following dummy antennas are used in aligning and are referred to in the following alignment instructions as "Dummy 1," "Dummy 2," and "Dummy 3."

Dummy 1: (I.F.)—Consists of a .1 mfd. condenser connected in series with the external oscillator.

Dummy 2: (Broadcast)—Consists of a 200 mmfd. condenser and a 20 ohm resistor connected in series with each other and in series with the external oscillator.

Dummy 3: (Short Wave)—Consists of a .1 mfd. condenser and a 400 ohm resistor connected in series with each other and in series with the external oscillator.

ALIGNING I.F. TRANSFORMERS: (465 K.C.):

Part No. 108-106D Output I.F. Transformer
Part No. 108-105F Input I.F. Transformer

These I.F. transformers have two adjustments, both of which are accessible from the top of chassis (see Fig. 1).

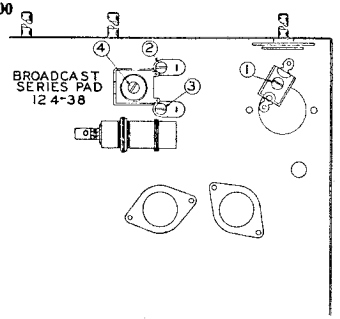

FIG. 3—BOTTOM VIEW

1. With volume control full on, (the extreme right of its rotation), the band changing switch in the broadcast position, (extreme left of its rotation), and with the variable condenser in its minimum capacity position, plates entirely out of mesh, make the following adjustments:
   (a) Connect external oscillator set at 465 kilocycles, in series with "Dummy 1," to the control grid cap of the type 6K7 tube, and adjust the output I.F. transformer No. 108-106D to resonance.
   (b) Move oscillator output clip from grid of 6K7 to grid cap of 6L7G and adjust input I.F. transformer (No. 108-105F) to resonance.
   (c) With oscillator still connected to 6L7G, readjust output I.F. transformer (108-106D) if necessary.

SHORT WAVE BAND ALIGNMENT:

5.5 to 18.1 Megacycles

1. With band changing switch in the short wave position, extreme right of its rotation, and with external oscillator set at 17 megacycles and connected in series with "Dummy 3" to the antenna and ground leads, make the following adjustments:
   (a) Move dial pointer to 17 megacycles and adjust short wave oscillator trimmer to resonance.
   This adjustment is the trimmer mounted on the top of rear section of the variable gang condenser (see Fig. 1, top view Adjustment Number 5).
   (b) Adjust short wave antenna trimmer (Adjustment Number 1), to resonance (see Fig. 3, bottom view).

BROADCAST BAND ALIGNMENT:

535 to 1720 Kilocycles

1. With band changing switch in the broadcast position, extreme left of its rotation, and with gang condenser in its minimum capacity position, plates entirely out of mesh, and with external oscillator connected in series with "Dummy 2" to antenna and ground leads make following adjustments:
   (a) Set external oscillator to 1720 K.C. and adjust broadcast oscillator trimmer to resonance. (Adjustment number 3, see bottom view of chassis, Fig. 3).
   (b) Re-set external oscillator to 1400 K.C., rotate variable gang condenser and pick up signal. Adjust broadcast antenna trimmer (adjustment number 2), to resonance.
   (c) Re-set external oscillator to 600 K.C., and adjust broadcast series pad (adjustment number 4), to resonance by rotating condenser to approximately 600 K.C., rocking it slowly to and fro until by adjusting series pad maximum output is attained. This adjustment is located on the bottom of the chassis directly under the variable gang condenser. (See bottom view of chassis, Fig. 3).
   (d) Repeat adjustments "a" and "c" until sensitivity is at its maximum.
   (e) Check for tracking and sensitivity at 1400, 1000, and 600 kilocycles. **Under no circumstances bend plates of variable condenser sections to correct tracking.**

MONTGOMERY WARD & CO.

NOBLITT SPARKS INDUSTRIES

MODEL 5
Schematic, Parts
Alignment

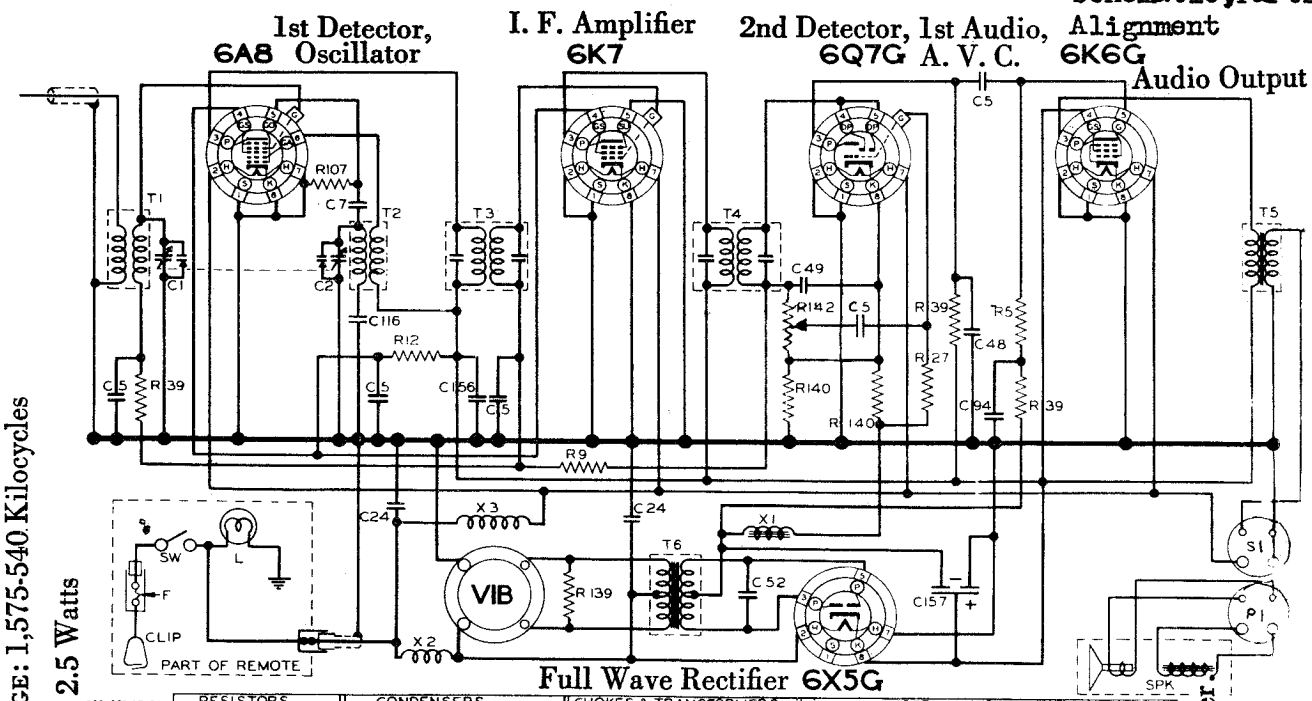

FREQUENCY RANGE: 1,575-540 Kilocycles

POWER OUTPUT: 2.5 Watts

SPEAKER: 5" Diameter, 5 Ohm field; 3 Ohm voice coil

RESISTORS

FOR RESISTORS: K = 1000 Ω, M = 1,000,000 Ω

R	OHMS	W	PART NO
5	500K	1/8	17-2070
9	1M	1/8	17-2080
27	2M	1/4	17-4788
34	SK		7-14032
39	300K	1/4	17-14051
142	1M	VC	17-13392
73	30K	1/8	17-4276
139	100		17-14219
140	50	1/2	17-14220
2	10K	1/4	17-4275
107	100K	1/4	17-14172

CONDENSERS

C	CAPACITY	VOLT	PART NO
1	TWO-GANG		17-13432
2	VARIABLE		
5	.05	200	17-14015
24	.5	200	17-14040
48	.00025	600	17-4207
49	.0005	600	17-14063
52	.01	1200	17-4602
94	.1	200	17-14115
156	.05	400	17-4397
157	4 - 4 CAOW	550	17-13419
7	.0001	600	17-2064
116	.0005	600	17-14151

CHOKES & TRANSFORMERS

T-X	TYPE	PART NO
T	TRANSFORMERS	
1	ANTENNA COIL	00-13336
2	OSCILLATOR COIL	00-13393
3	FIRST I.F. COIL	29-13386
4	SECOND I.F. COIL	29-13385
5	OUTPUT TRANS	00-14666
6	POWER TRANS	00-14659
X	CHOKES	
1	B+ FILTER	00-14917
2	"A" FILTER	00-4518
3	"A" FILTER	00-13373

MISCELLANEOUS UNITS

SYMBOL	DESCRIPTION	PART NO.
F	FUSE 10A - 25V	17-[illegible]97
L	LAMP	17-13904
P1	PLUG - ASSEMBLED WITH SPEAKER	
S1	SPEAKER SOCKET	17-[illegible]AM
SPK	SPEAKER	[illegible]13370
SW	POWER SWITCH - IN REMOTE CONTROL	
VIB	VIBRATOR	17-[illegible]47

I.F. PEAK 455 K.C. - BALANCE AT 1400 K.C.
CHECK AT 1000 & 600 K.C.
NOBLITT-SPARKS INDUSTRIES, INC.,
COLUMBUS, INDIANA.

ARVIN CAR RADIO MODEL 5

Adjustment of Intermediate Frequency Stages

1. Connect the balancing oscillator to the grid cap of the 6A8 tube through a .002 mfd. condenser. Place a 200,000 ohm resistor between the grid cap of the 6A8 and the grid clip which normally fits on the cap of the 6A8 tube. This will maintain the bias on this tube during alignment.
2. Adjust padder Nos. 1, 2, 3, and 4 for maximum output.

Alignment of Oscillator and Antenna Trimmers

1. Connect the balancing oscillator to the antenna lead wire through a 50 uuf. dummy antenna. Rotate the rotor plates in the radio chassis tuning condenser completely out of mesh.
2. With an input frequency of 1,575 K. C. adjust Padder No. 5 to resonance.
3. Reset the balancing oscillator to 1,400 K. C. Rotate the tuning condenser until the signal is tuned to resonance. Reduce the output of the balancing oscillator until the signal barely deflects the output meter.
4. Adjust padder No. 6 until a maximum out-put reading is obtained. Check the sensitivity. See rating above.
5. After installation of the radio receiver in an automobile, tune in a very weak station between 1,300 and 1,500 K. C. and readjust padder No. 6 for maximum output.

The sensitivity of this receiver may be determined by reading the number of microvolts input required to produce 500 milliwatts output. That output is obtained when a reading of 1.2 volts across the voice coil of the speaker is indicated by the output meter.

Form RS9 Jan. 1938

©John F. Rider, Publisher

MODEL 5
Socket, Trimmers
Voltage, Specs.
Layout

NOBLITT SPARKS INDUSTRIES

MODEL No. 5
Top Chassis View

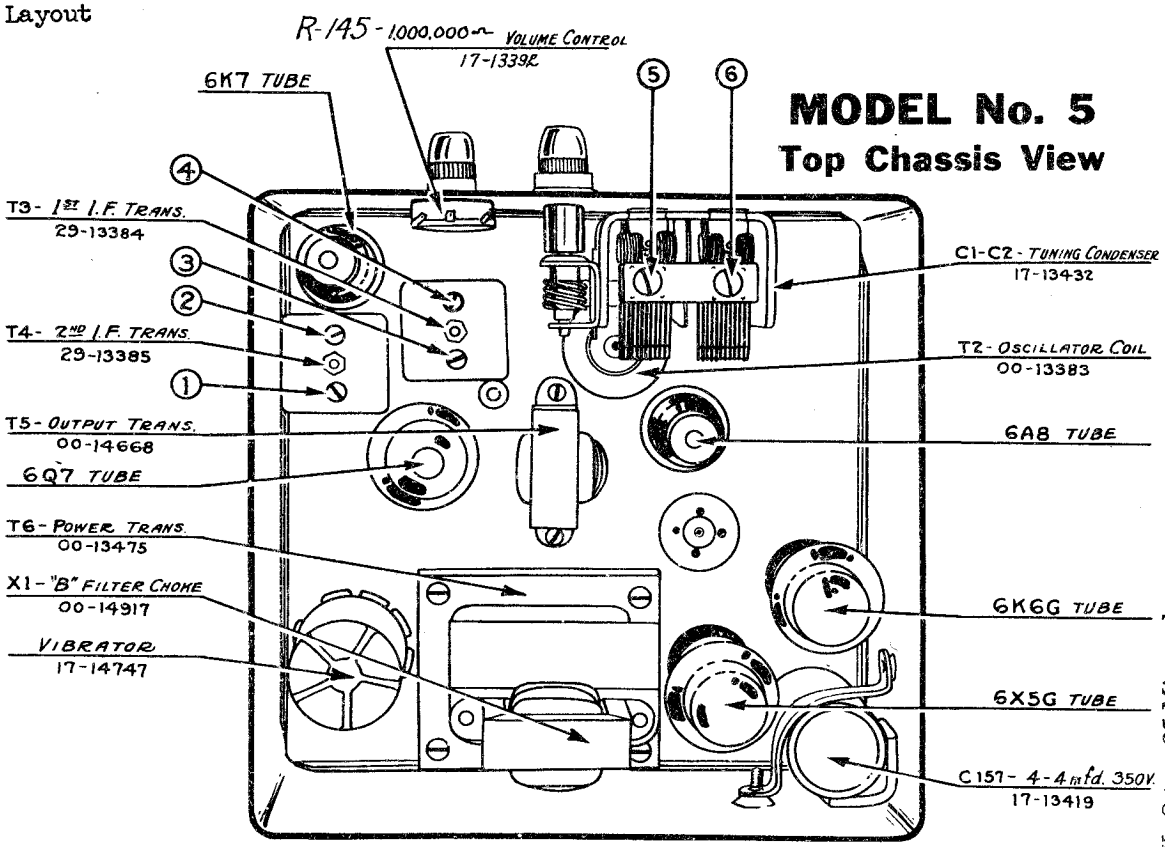

Bottom Chassis View

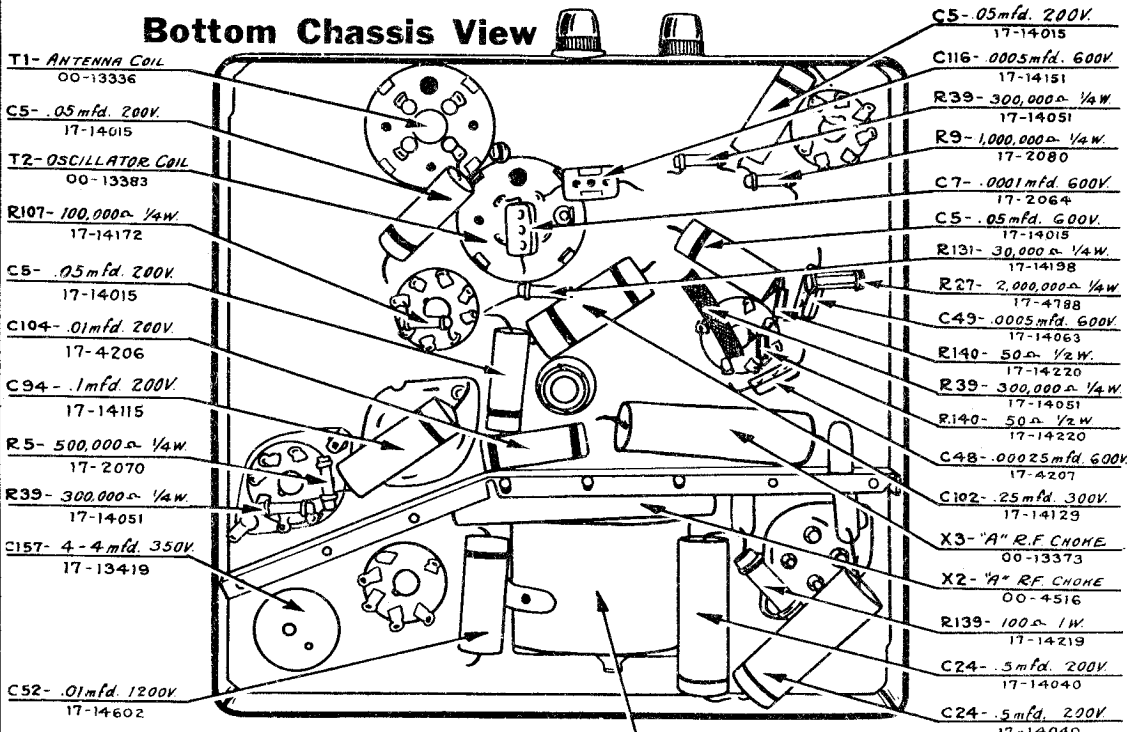

MODEL 5 SOCKET VOLTAGES

Tube	Heater	Cathode	Suppressor	Screen	Plate	Anode Grid	*Oscillator Grid		Grid Bias
6A8	6.3	0	.....	86	190	196	18-8		2.0
6K7	6.3	0	0	86	190	.....	.....		2.0
6Q7G	6.3	4	.....	.....	125	.....	.....		2.0
6K6G	6.3	0	.....	198	180	.....	.....	*1,400 to 600 KC	14.0
6X5G	6.3	212	.....	.....	230	.....	.....		.....

Readings taken with input of 5.8 volts (average "A" voltage of most car installations).

CONDENSER TUNING RATIO: 12:1
CHASSIS SHIPPING WEIGHT: 19½ pounds
TYPE OF CONTROL: Under-panel Type

*Antenna Input (1,000 K. C.) 25 Microvolts
*50 uuf. dummy antenna input
POWER SUPPLY: 6-Volt Storage Battery
AMPERE DRAIN: 5.7 Amperes

SENSITIVITY: (Given below for 500 Milliwatts output—1.2 Volts across voice coil)
6K7 I. F. Grid (455 K. C.) 5500 Microvolts
6A8 Mixer Grid (455 K. C.) 100 Microvolts
6A8 Mixer Grid (1,000 K. C.) 140 Microvolts

©John F. Rider, Publisher

NOBLITT SPARKS INDUSTRIES

MODEL 6
Schematic, Parts
Voltage, Specs.
Tuner, Alignment

POWER SUPPLY: 6 Volt Storage Battery AMPERE DRAIN: 5.7 Amperes POWER OUTPUT: 3.3 Watts

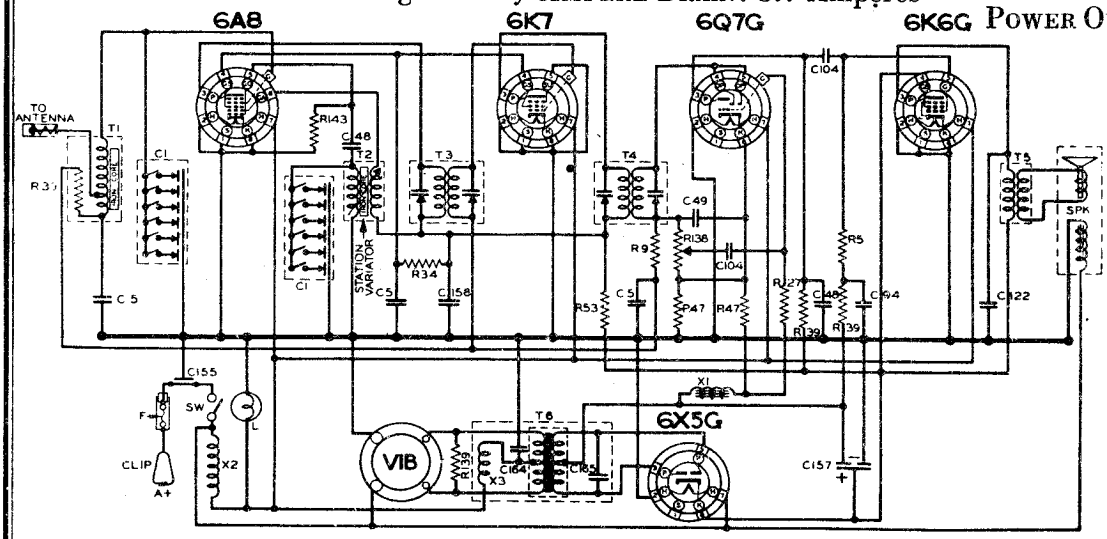

ARVIN CAR RADIO MODEL 6

MODEL 6 SOCKET VOLTAGES
All readings taken with a voltage of 5.8 at filaments of tubes.

Tube	Cathode	Heater	Suppressor	Screen	Plate	*Oscillator Grid	Anode Grid	Grid Bias
6A8	.....	5.8	.....	90	190	18-8	165	2.2
6K7	.....	5.8	0	90	190	.....	.....	2.2
6Q7G	2.0	5.8	.....	.....	120	.....	.....	2.0
6K6G	.....	5.8	.....	190	187	.....	.....	13.0
6X5G	.....	5.8	.....	.....	215 AC	.....	.....	.....

* 1500-600 Kilocycles

RESISTORS

R	OHMS	W	PART NO.
5	500K	½	17-2070
9	1M	½	17-2080
27	2M	½	17-4786
34	15K	1	17-14032
38	300K	½	17-14051
47	50	½	17-14059
53	700	½	17-4278
136	1M	½	17-13720
139	100	1	17-14219
143	80K	½	17-14227

NOTE: ON RESISTORS K=1,000 x M=1,000,000 x

CONDENSERS

C	CAPACITY	VOLT	PART NO.
1	.21+.1 GANG		17-13451
2	PUSH-BUTTON		
3	.05	200	17-14015
48	.00023	600	17-14207
49	.0005	600	17-14063
84	.1	200	17-14115
104	.01	200	17-4208
122	.01	400	17-2189
155	.0002	600	17-14217
158	.03	400	17-4387
157	4-4-CAC'W	350	17-13419
183	.0003	600	17-14229
184	.1	200	17-14229
185	.005	1800	17-14230

CHOKES & TRANSFORMERS

SYMBOL	TYPE	PART NO.
T-1	TRANSFORMERS	
1	ANTENNA COIL	00-13443
2	OSCILLATOR COIL	00-13444
3	FIRST I.F. TRANS.	29-13446
4	SECOND I.F. TRANS.	29-13447
5	OUTPUT TRANS.	00-13480
6	POWER TRANS.	00-13445
X	CHOKES	
1	"B" FILTER	00-13473
2	SUPPRESSION CHOKE	00-13458
3	SUPPRESSION CHOKE	00-13458

MISCELLANEOUS UNITS

SYMBOL	DESCRIPTION	PART NO
F	FUSE (GAUGE - 25 VOLTS)	17-2328
L	DIAL LIGHT MAZDA NO 51	17-13904
SPK	SPEAKER	17-13449
SW	SWITCH - PART OF NO 17-13420	
VIB	VIBRATOR	17-14747

I.F. PEAK 455 K.C.
FREQUENCY RANGE 1575 TO 540 K.C.
NOBLITT-SPARKS INDUSTRIES, INC.,
COLUMBUS, INDIANA.

TUBES:

6A8	1st Detector, Oscillator
6K7	I. F. Amplifier
6Q7G	2nd Detector, 1st Audio, A. V. C.
6K6G	Audio Output
6X5G	Full Wave Rectifier

FREQUENCY RANGE: 1,540-510 Kilocycles

SENSITIVITY: (Specified for 500 milliwatts output. 1.2 volts across voice coil of speaker.)

1000 K.C.—Ant. (50 uuf dummy)	8.2 Microvolts
1000 K.C.—Grid Cap 6A8 Tube	130 Microvolts
455 K.C.—Grid Cap 6A8 Tube	110 Microvolts
455 K.C.—Grid Cap of 6K7 Tube,	5,200 Microvolts

BALANCING INSTRUCTIONS MODEL 6 ARVIN CAR RADIO

1. Connect the balancing oscillator to the grid cap of the 6A8 tube through a .0002 mfd. condenser. Place a 200,000 ohm resistor between the grid cap of the 6A8 and the grid clip which normally fits on the cap of the 6A8 tube. This will maintain the grid bias on the tube during alignment.
2. Adjust padders 1, 2, 3, and 4 for maximum output.
3. Rotate the Variator shaft to its mid-point position.
4. Reading from left to right the push buttons cover the following frequencies:

Button No.	Frequency Range	Oscillator Padder No.	Antenna Padder No.
A	1550-1050	5	6
B	1350-850	7	8
C	1350-850	9	10
D	1100-650	11	12
E	1100-650	13	14
F	950-510	15	16

Push button frequencies are adjusted by the padder screws directly above and below each individual push button. For example, suppose a station operating on 1400 K.C. was desired; this is within the range of button A only.

a. Connect a balancing oscillator to the set antenna terminal through a 50 uuf dummy antenna.

b. With an input frequency of 1400 K.C., adjust padder No. 5 to resonance. Adjust padder No. 6 for maximum output.

Follow the same procedure for any of the other buttons always selecting a frequency within range of the respective buttons.

5. Final adjustment of the Antenna padders should be made with the receiver installed in the car connected to the car antenna.

©John F. Rider, Publisher

MODEL 6
Socket, Trimmers
Layout

NOBLITT SPARKS INDUSTRIES

MODEL-6 - TOP VIEW

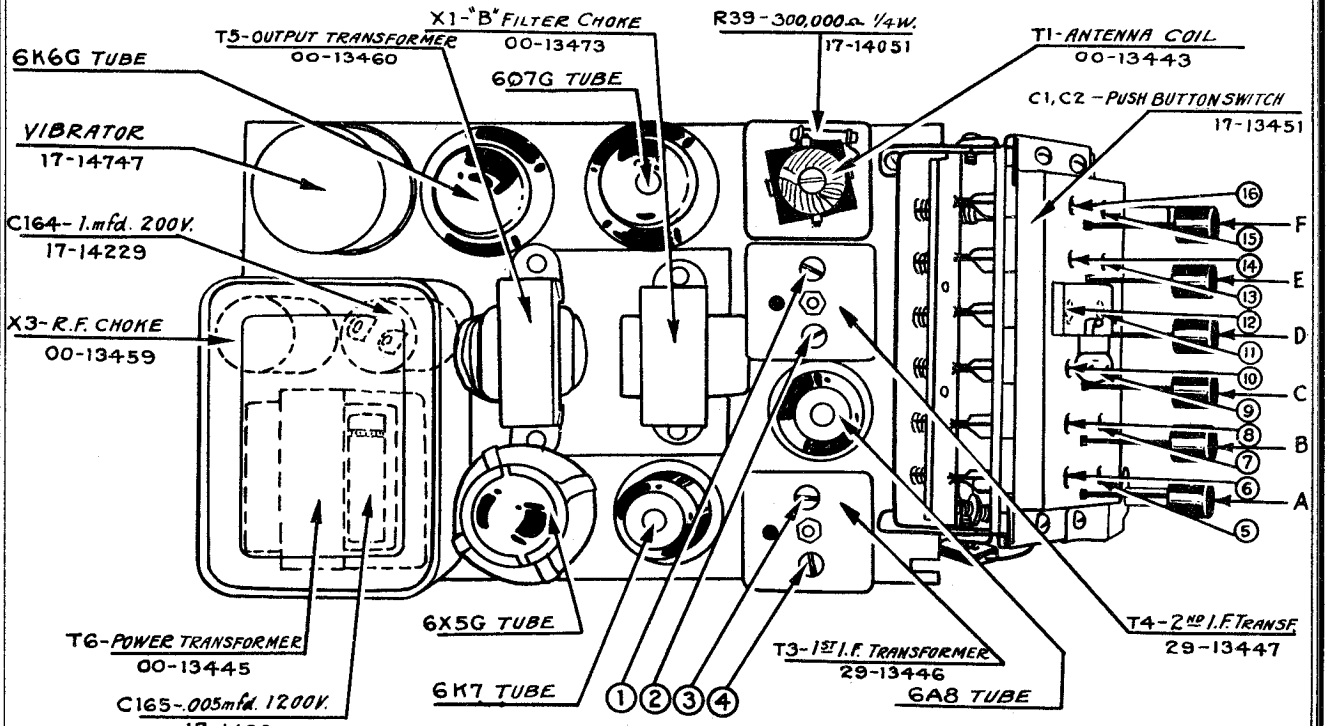

A-1400KC, B-1200KC, C-1000KC, D-800KC, E-700KC, F-600KC.

MODEL-6 - BOTTOM VIEW

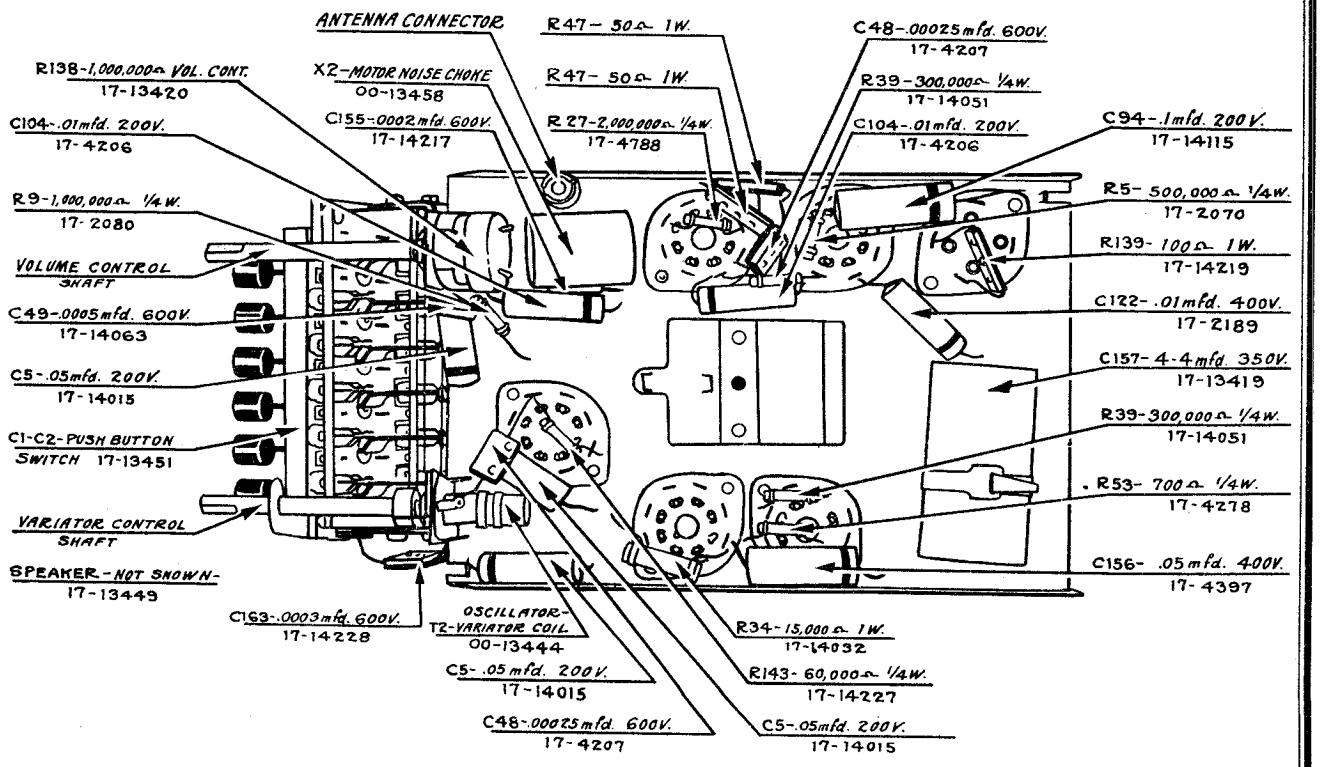

©John F. Rider, Publisher

MODEL 22-A
Schematic, Parts
Voltage, Alignment

NOBLITT SPARKS INDUSTRIES

FREQUENCY RANGE: 1,575-540 Kilocycles POWER SUPPLY: 6-Volt Storage Battery
POWER OUTPUT: 3 Watts AMPERE DRAIN: 5.7 Amperes

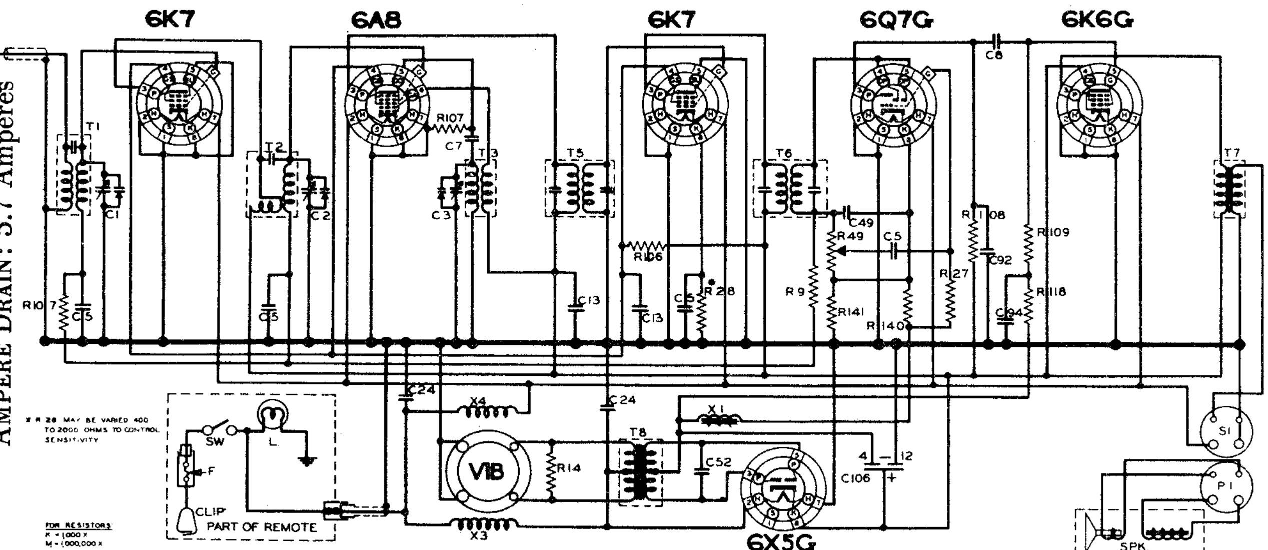

* R 28 MAY BE VARIED 400 TO 2000 OHMS TO CONTROL SENSITIVITY

FOR RESISTORS:
K = 1000 X
M = 1,000,000 X

RESISTORS

R	OHMS	W	PART NO.
9	1M	¼	17-2080
14	200	½	17-4287
49	500K	V.C.	17-14536
82	30	¼	17-14117
106	50K	¼	17-14171
107	100K	¼	17-14172
108	200K	¼	17-14173
109	500K	¼	17-14174
111	20K	½	17-14176
113	250K	¼	17-14178
118	300K	¼	17-14183
122	400	¼	17-14187
140	50	½	17-14220
27	2M	¼	17-4788
28	1500	¼	17-4205
141	60	¼	17-14224

CONDENSERS

C	CAPACITY	VOLT	PART NO.
1	THREE		17-15726
2	GANG		
3	VARIABLE		
5	.05	200	17-14015
7	.0001	400	17-2064
8	.01	600	17-14016
13	.1	300	17-14046
24	.5	200	17-14040
49	.0003	600	17-14083
52	.01	1200	17-14602
92	.001	600	17-14113
94	.1	200	17-14115
106	4-12 CACW	250	17-14132

CHOKES & TRANSFORMERS

T-X	TYPE	PART NO.
T	TRANSFORMERS	
1	ANTENNA COIL	00-13326
2	R F COIL	00-14916
3	OSC. COIL	00-14919
5	1ST. I.F. COIL	00-14749
6	2ND I.F. COIL	00-14750
7	OUTPUT TRANS.	00-14668
8	POWER TRANS.	00-14659
X	CHOKES	"
1	"B" FILTER	00-14817
3	"A" FILTER	00-4516
4	"A" FILTER	00-13373

MISCELLANEOUS UNITS

SYMBOL	DESCRIPTION	PART NO
S1	SPEAKER SOCKET	17-2230
L	DIAL LIGHT IN REMOTE CONTROL	17-13904
VIB.	VIBRATOR	17-14747
SW	POWER SWITCH IN REMOTE CONTROL	———
F	FUSE 10A.-25VOLT	17-2197
SPK	SPEAKER	17-14951
P1	PLUG ASSEMBLED TO SPEAKER	———

I.F. PEAK 170K.C. - BALANCE AT 1400K.C.
CHECK AT 1000 & 600 K.C.
NOBLITT-SPARKS INDUSTRIES, INC.,
COLUMBUS, INDIANA.

MODEL 22A SOCKET VOLTAGES

(All readings taken with an input voltage of 5.8. Heater is shown as 6.3 although 5.8 is the average voltage at filaments.)

Tube	Heater	Cathode	Suppressor	Screen	Plate	*Oscillator Grid	Anode Grid*	*Grid Bias
6K7	6.3	0	0	60	150	......	......	1.4
6A8	6.3	0	......	60	150	3-6 Volts	90	1.4
6K7	6.3	2.6	0	60	150	......	......	2.6
6Q7G	6.3	1.35	......	......	120	......	......	2.5
6K6G	6.3	0	......	150	150	......	......	11.
6X5G	6.3	150	......	......	190AC	......	......	......

* Measured with Vacuum Tube Voltmeter—600 to 1,400 K. C.

MODEL 22A ARVIN CAR RADIO BALANCING INSTRUCTIONS

SPECIAL NOTE: Model 22A Arvin Car Radio has been designed to utilize the advantages of the exclusive Arvin Permatune Intermediate Frequency Transformers which are prebalanced at the factory and sealed to prevent frequency drift. This Arvin feature greatly simplifies balancing procedure. It is necessary, therefore, to adjust only the three screws located on the tuning condenser as follows:

1. Rotate the tuning condenser completely out of mesh. Connect the balancing oscillator to the antenna lead through a 200 uuf. dummy antenna. Ground the balancing oscillator to the antenna cable shield.
2. With the balancing oscillator set to 1,575 K. C. adjust padder No. 1 to resonance.
3. Reset the balancing oscillator to 1,400 K. C. Rotate the tuning condenser until the signal is tuned to resonance. Reduce the output of the balancing oscillator until the signal barely deflects the output meter.
4. Adjust padders Nos. 2 and 3 until a maximum output reading is obtained.
5. After installation of the radio receiver in an automobile, tune in a very weak station between 1,300 and 1,500 K. C. and readjust padder No. 3 for maximum output.

The sensitivity may be determined by reading the number of microvolts input required to produce 500 milliwatts output. That output is obtained when a reading of 1.2 volts across the voice coil of the speaker is indicated by the output meter.

Form No. RS10 Jan. 1938

©John F. Rider, Publisher

MODEL 22-A
Socket, Trimmers
Layout, Specs.

NOBLITT SPARKS INDUSTRIES

MODEL 22-A

Top Chassis View

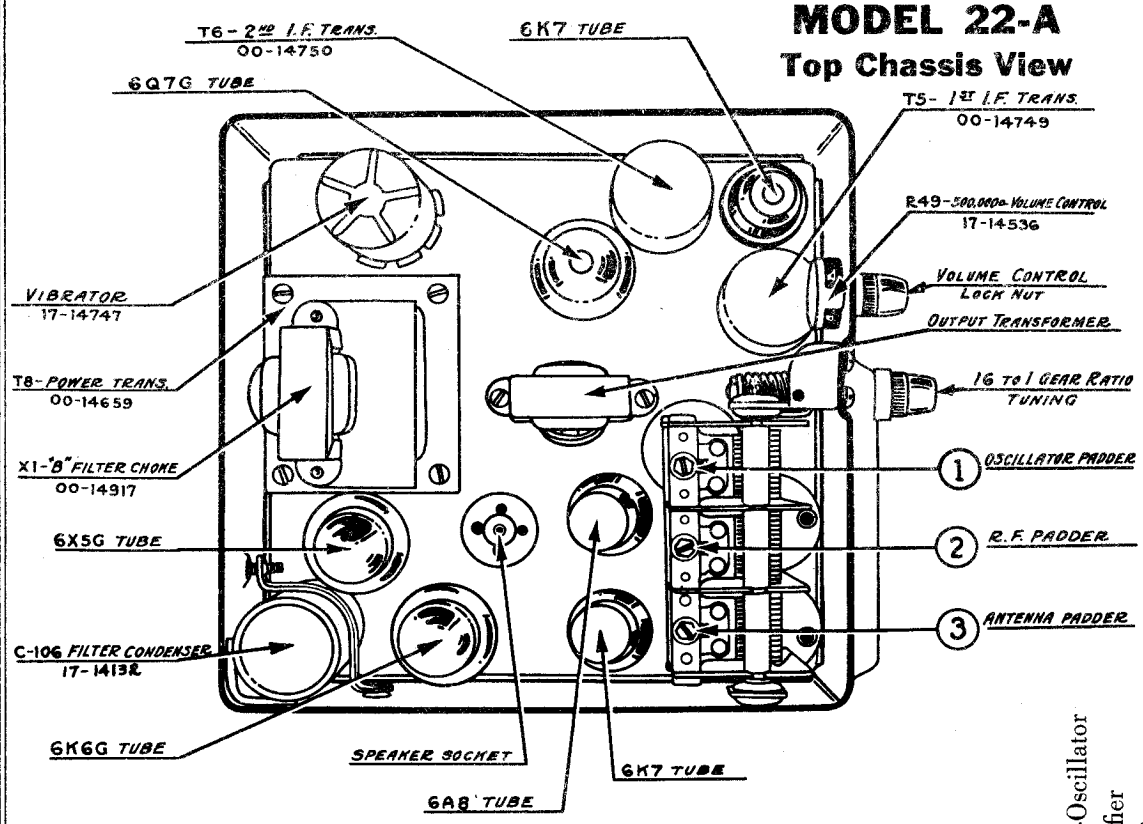

Bottom Chassis View

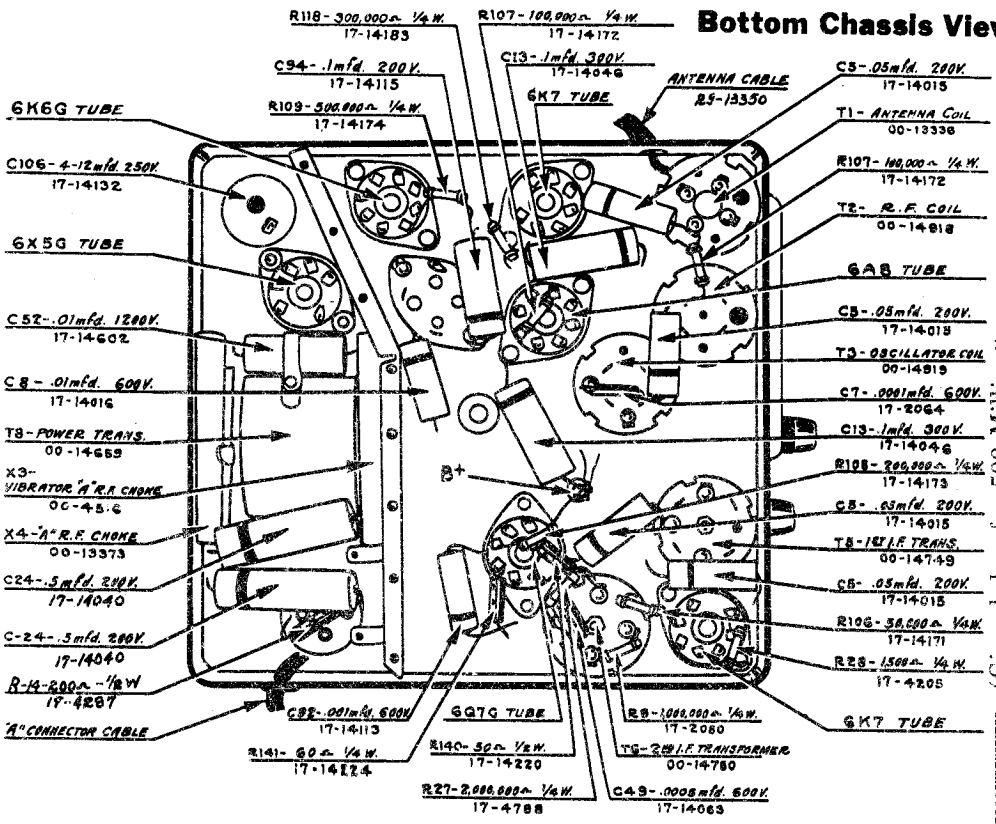

TUBES:

6A8	1st Detector-Oscillator	
6K7	R. F. Amplifier	
6K7	I. F. Amplifier	
6Q7G	2nd Detector; 1st Audio; A. V. C.	
6K6G	Audio Output	
6X5G	Full Wave Rectifier	

SPEAKER: 5" Diameter, 5 Ohm Field, 3.50 Ohm Voice Coil

DIAL TUNING RATIO: 16:1

CHASSIS SHIPPING WEIGHT: 19 pounds

CHASSIS DIMENSIONS: 8¼" x 8¼" x 6⅝"

SENSITIVITY: (Given below for 500 Milliwatts output—1.4 Volts across speaker voice coil.)

6K7	I. F. Grid (170 K. C.)	12,000 Microvolts
6A8	Mixer Grid (170 K. C.)	500 Microvolts
6A8	Mixer Grid (1,000 K. C.)	800 Microvolts
6K7	R. F. Grid (1,000 K. C.)	35 Microvolts
	*Antenna Input (1,000 K. C.)	10 Microvolts

*18 uuf. dummy antenna input.

©John F. Rider, Publisher

MODEL 42
Alignment

NOBLITT SPARKS INDUSTRIES

MODEL 32
Schematic, Parts
Voltage, Alignment

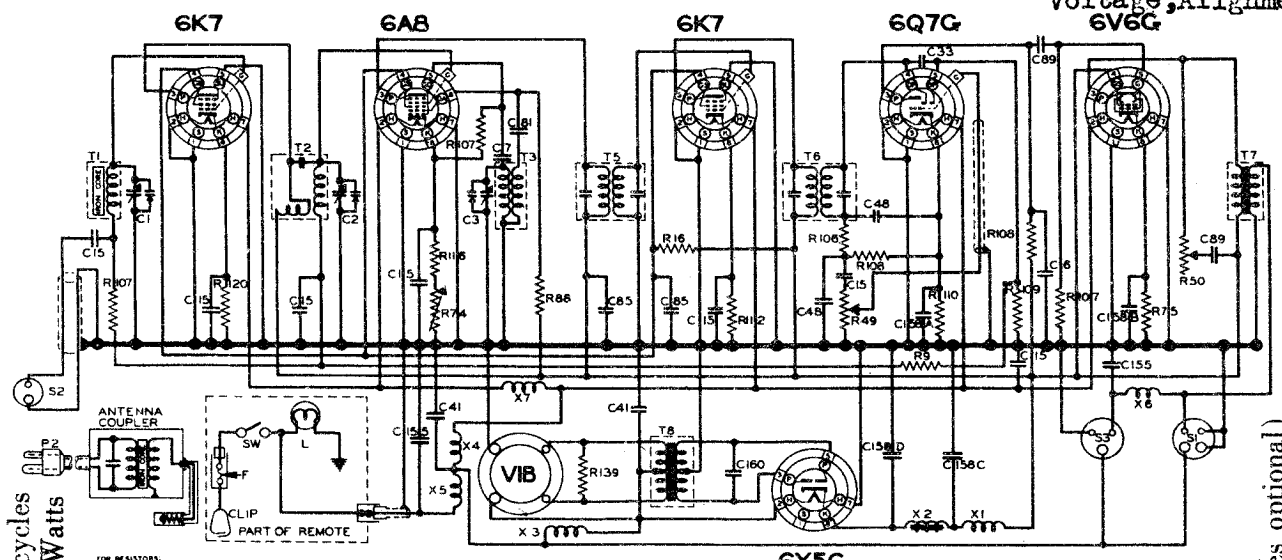

FREQUENCY RANGE: 1,575-540 Kilocycles
POWER OUTPUT: 5 Watts

SPEAKER: 8" Dynamic (Other sizes optional)
4.5 Ohm Field; 2.6 Ohm Voice Coil

RESISTORS

R	OHMS	W	PART NO
1	1M	½	17-2080
18	50K	½	17-4783
49	500K	VC	17-14536
50	100K	TC	17-14505
74	800	—	17-14107
75	240	½	17-14109
88	1M	½	17-14135
106	50K	½	17-14171
107	100K	½	17-14172
108	200K	½	17-14173
109	500K	½	17-14134
110	5K	½	17-14175
112	500	½	17-14177
120	600	½	17-14185
139	100	1	17-14219
148	300	½	17-14181

CONDENSERS

C	CAPACITY	VOLT	PART NO
1	TRIMER		
2	GANG		17-15726
3	VARIABLE		
6	.002	600	17-2083
7	.0001	600	17-2064
15	.05	200	17-14036
33	.00005	600	17-14047
41	1.	15	17-4709
48	.00023	600	17-4207
81	.003	600	17-14098
85	1	400	17-14101
89	.05	600	17-14108
155	.0002	200	17-14217
158A	12	25	17-14821
158B	12	25	
158C	4	330	
158D	12	330	
160	.004	1600	17-14823

CHOKES & TRANSFORMERS

T-X	TYPE	PART NO.
T	TRANSFORMERS	
1	ANTENNA COIL	00-13337
2	R.F. COIL	00-14779
3	OSCILLATOR COIL	00-14780
5	FIRST I.F. COIL	00-14749
6	SECOND I.F. COIL	00-14750
7	OUTPUT TRANS.	00-14763
8	POWER TRANS.	00-14755
X	CHOKES	
1	"B" CHOKE (AIR CORE)	00-2181-1
2	"B" CHOKE IRON CORE	00-4754
3	"B" FILTER CHOKE	00-4518
4	"B" FILTER CHOKE	00-4519
5	SUPPRESSION	00-14681
6	V.C. SUPPRESSION	00-14678
7	HEATER FILTER	00-14677

MISCELLANEOUS UNITS

SYMBOL	DESCRIPTION	PART NO
S1	SPEAKER SOCKET (INSIDE CASE)	17-2230
S2	ANTENNA COUPLER SOCKET	17-14528
S3	SPEAKER SOCKET (EXTERNAL SPEAKER)	17-14527
P2	ANTENNA COUPLER PLUG & CORD ASSY	20-14838
L	DIAL LIGHT (REMOTE CONTROL)	17-13904
SW	POWER SWITCH (REMOTE CONTROL)	
VIB	VIBRATOR	17-14127
F	FUSE 10A - 25 VOLT	17-2187
	ANTENNA COUPLER	00-13338

I.F. PEAK 170K.C. - BALANCE AT 1400K.C.
CHECK AT 1000 & 600 K.C.
NOBLITT-SPARKS INDUSTRIES, INC.
COLUMBUS, INDIANA.

MODEL 32 SOCKET VOLTAGES

(All readings taken with an input voltage of 5.8. Heater voltage is shown as 6.3 although 5.8 is the average obtained in most car installations.)

Tube	Heater	Cathode	Suppressor	Screen	Plate	Anode Grid	Oscillator Grid	Grid Bias
6K7	6.3	2.5	0	70	235	.....	.....	2.5
6A8	6.3	3.2	.....	70	235	185	3-14	3.2
6K7	6.3	2.5	0	70	235	.....	.....	2.5
6Q7G	6.3	1.7	.....	.....	130	.....	.....	1.7
6V6G	6.3	10.5	.....	235	220	.....	.....	10.5
6X5G	6.3	270	.....	.....	295 A. C.	.....	.....	.....

MODEL 32 ARVIN CAR RADIO BALANCING INSTRUCTIONS

SPECIAL NOTE: Model 32 and 42 Arvin Car Radio has been designed to utilize the advantages of the Exclusive Arvin Permatune Intermediate Frequency Transformers which are prebalanced and sealed at the factory to prevent intermediate frequency drift. This Arvin feature greatly simplifies balancing procedure. It is necessary therefore to adjust only the three screws located on the variable tuning condenser as follows:

1. Rotate the tuning condenser until the rotor plates are completely out of mesh. Connect the balancing oscillator to the antenna input lead of the Phantom Filter through a 50 uuf. dummy antenna. Ground the balancing oscillator to the Phantom Filter red junction box.

2. With the balancing oscillator set to 1,575 K. C. adjust padder No. 1 to resonance.

3. Reset the balancing oscillator to 1,400 K. C.; rotate the tuning condenser until this signal is tuned to resonance. Reduce the output of the balancing oscillator until the signal barely deflects the output meter.

4. Adjust padder Nos. 2 and 3 until a maximum output reading is obtained.

5. After installation of the radio receiver in an automobile, tune in a very weak station between 1,300 and 1,500 K. C. and readjust padder No. 3 for maximum output.

The sensitivity of this receiver may be determined by reading the number of microvolts input required to produce 100 watt output. That output is obtained when a reading of 1.9 volts across the voice coil of the speaker is indicated by the output meter.

Form No. RS11 Jan. 1938

©John F. Rider, Publisher

MODEL 32
Socket, Trimmers
Layout, Specs.

NOBLITT-SPARKS INDUSTRIES, INC.

Top Chassis View

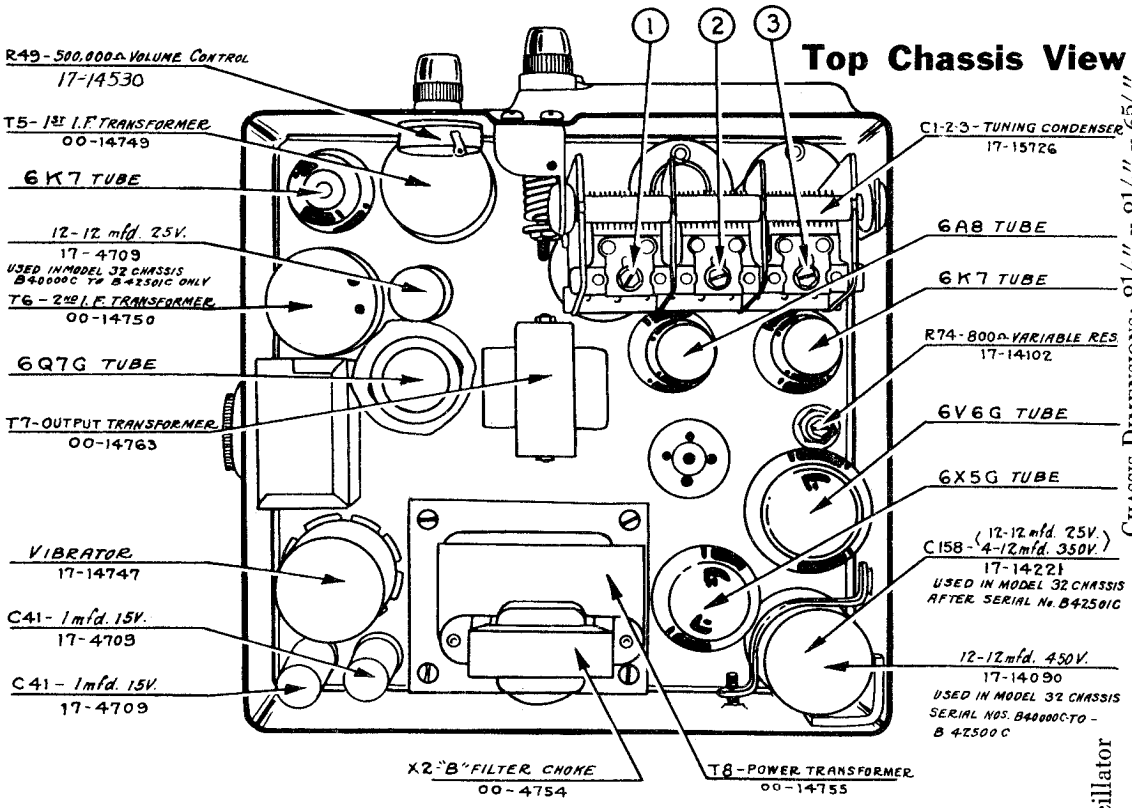

CHASSIS DIMENSIONS: 8¼" x 8¼" x 6⅝"

COLOR: Taupe Morocco Paint

CHASSIS SHIPPING WEIGHT: 17½ pounds

DIAL TUNING RATIO: 16:1

MODEL No. 32
Bottom Chassis View

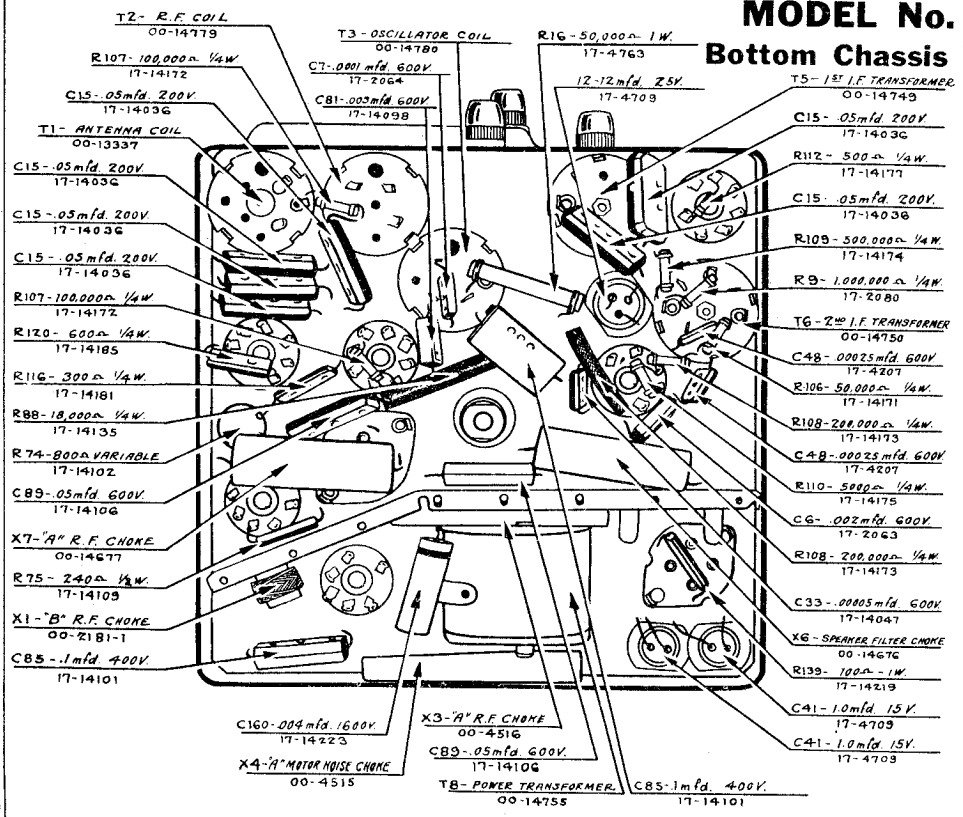

TUBES:

6K7	R. F. Amplifier	
6A8	1st Detector-Oscillator	
6K7	I. F. Amplifier	
6Q7G	2nd Detector; 1st Audio; A. V. C.	
6V6G	Beam Power Output	
6X5G	Full Wave Rectifier	

POWER SUPPLY: 6-Volt Storage Battery

AMPERE DRAIN:

6K7 1. F. Grid (170 K. C.)	15,000 Microvolts
6A8 Mixer Grid (170 K. C.)	700 Microvolts
6A8 Mixer Grid (1,000 K. C.)	1,000 Microvolts
6K7 R. F. Grid (1,000 K. C.)	32 Microvolts
Antenna Input (1,000 K. C.)	5 Microvolts

©John F. Rider, Publisher

MODEL 9A
Alignment

NOBLITT-SPARKS INDUSTRIES, INC.

MODEL 42
Schematic, Parts
Voltage, Alignment

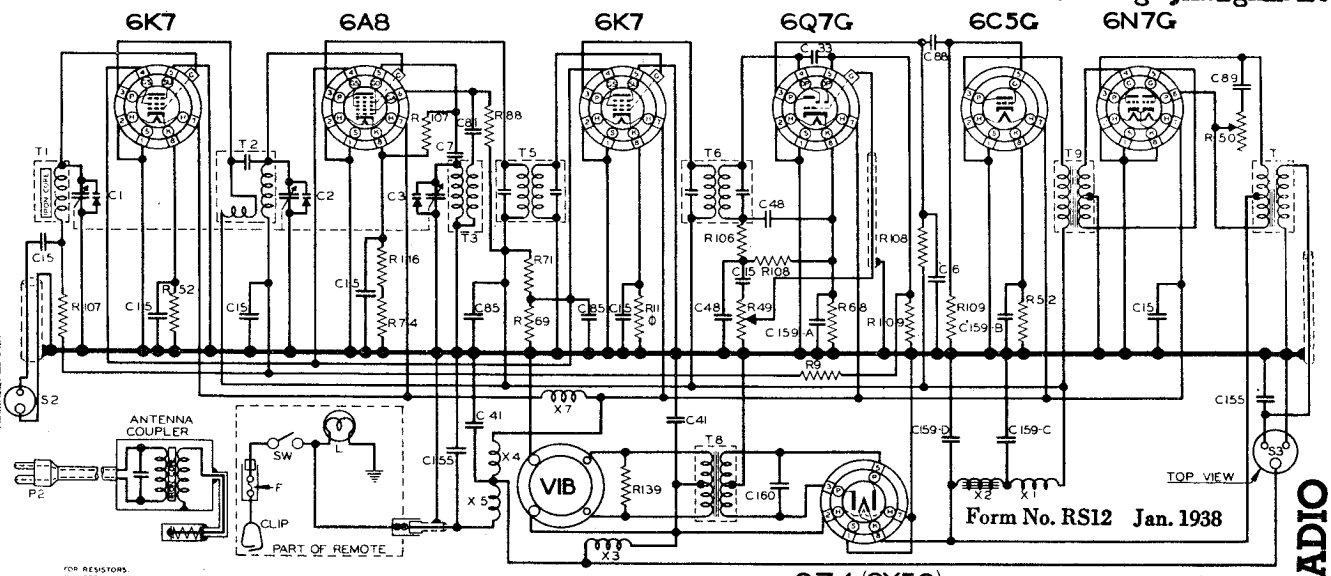

FOR RESISTORS, K = 1000 X, M = 1,000,000 X
Ø MAY BE VARIED FROM 400 TO 3000 OHMS TO CONTROL SENSITIVITY

RESISTORS

R	OHMS	W	PART NO.	R	OHMS	W	PART NO.
9	1M	1/4	17-2080				
11	2M	1/4	17-4202				
49	500K	VC	17-14536				
50	100K	TC	17-14505				
52	1K	1/4	17-210				
66	8K	1/4	17-4290				
69	60K	1/2	17-4180				
71	40K	1	17-14097				
74	800	WAR	17-14102				
86	18K	1/4	17-14135				
106	50K	1/4	17-14171				
107	100K	1/4	17-14172				
108	200K	1/4	17-14173				
109	500K	1/4	17-14174				
116	300	1/4	17-14181				
139	100	1	17-14219				

CONDENSERS

C	CAPACITY	VOLTS	PART NO.	C	CAPACITY	VOLTS	PART NO.
1	TRIM						
2	GANG		17-14732				
3	VARIABLE						
6	.002	600	17-2063				
7	.0001	600	17-2064				
15	.05	200	17-14036				
33	.00005	600	17-14047				
41	.1	15	17-4709				
48	.00025	600	17-4207				
81	.003	800	17-14098				
85	.1	400	17-14101				
88	.02	600	17-14105				
89	.03	600	17-14106				
155	.0002	200	17-14217				
159A	12	25	17-14222				
159B	12	25					
159C	12	450					
159D	12	450					
160	.004	1600	17-14223				

CHOKES & TRANSFORMERS

T-X	TYPE	PART NO.
T	TRANSFORMERS	
1	ANTENNA COIL	00-13337
2	R.F. COIL	00-14778
3	OSCILLATOR COIL	00-14780
5	FIRST I.F. COIL	00-14749
6	SECOND I.F. COIL	00-14750
7	OUTPUT TRANS.	00-14776
8	POWER TRANS	00-4786
9	INPUT TRANS	00-14783
X	CHOKES	
1	"B" R.F. CHOKE	00-2181
2	B CHOKE-IRON CORE	00-4754
3	"A" FILTER CHOKE	00-4518
4	"A" FILTER CHOKE	00-4515
5	SUPPRESSION CHOKE	00-14661
7	HEATER FILTER	00-14677

MISCELLANEOUS UNITS

SYMBOL	DESCRIPTION	PART NO.
F	FUSE 10AMP - 25VOLT	17-2197
L	DIAL LIGHT - IN REMOTE CONTROL	17-13904
P2	ANTENNA COUPLER PLUG & CORD ASSEMBLY	17-14636
S2	ANTENNA COUPLER SOCKET	17-14526
S3	SPEAKER SOCKET	17-14527
SW	POWER SWITCH - ON REMOTE CONTROL	
VIB	VIBRATOR	17-14332

I.F. PEAK 170K.C. - BALANCE AT 1400K.C.
CHECK AT 1000 & 600 K.C.
NOBLITT-SPARKS INDUSTRIES, INC.,
COLUMBUS, INDIANA.

MODEL 42 CAR RADIO

FOR **BALANCING INSTRUCTIONS** SEE ARVIN CAR RADIO MODEL 32

MODEL 42 SOCKET VOLTAGES

(All readings taken with an input voltage of 5.8. Heater voltage is shown as 6.8 although 5.8 is the average obtained in most car installations.)

Tube	Heater	Cathode	Suppressor	Screen	Plate	Anode Grid	Oscillator Grid	*Grid Bias
6K7	6.3	3.5	0	85	260	.....	.....	3.5
6A8	6.3	3.0	.....	85	260	180	5-10 V.	3.0
6K7	6.3	5.0	0	85	260	.....	.....	5.0
6Q7G	6.3	1.9	.....	.....	160	.....	.....	1.9
6C5G	6.3	6.0	.....	.....	260	.....	.....	6.0
6N7G	6.3	0	.....	.....	275	.....	.....	0
6X5G	6.3	285	.....	.....	310	.....	.....	.....

*Taken with No. RF Signal Input.

MODEL 9A ARVIN CAR RADIO BALANCING INSTRUCTIONS

SPECIAL NOTE: All Arvin 1937 model car radios are designed to use the Exclusive Arvin Permaset prebalanced intermediate frequency transformers, which require no adjustment whatsoever. This Arvin feature greatly simplifies balancing procedure. It is necessary, therefore, to adjust only the three screws located on the tuning condenser as follows:

See page 51 for trimmer condenser locations.

1. Rotate the tuning condenser completely out of mesh. Connect the balancing oscillator to the antenna lead. Ground the balancing oscillator to the radio chassis.
2. With the balancing oscillator set to 1575 K. C. adjust padder condenser No. 1 for maximum output.
3. Reset the balancing oscillator to 1400 K. C. Rotate the tuning condenser until this signal is tuned to resonance. Reduce the output of the balancing oscillator until the signal barely deflects the output meter.
4. Adjust padders No. 2 and No. 3 until maximum output reading is obtained.
5. After installation in car tune in a WEAK station between 1150 and 1400 K. C. and readjust padder No. 3 for maximum output.

©John F. Rider, Publisher

MODEL 42
Socket, Trimmers
Layout, Specs.

NOBLITT-SPARKS INDUSTRIES, INC.

Top Chassis View

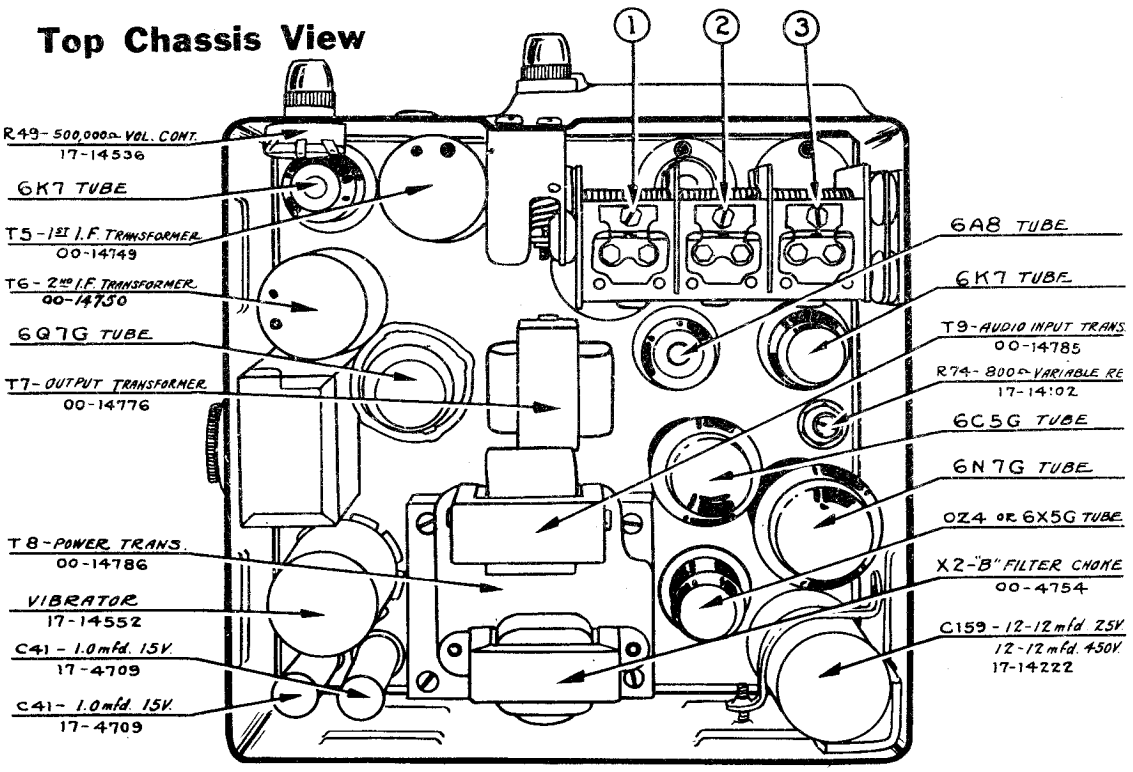

FREQUENCY RANGE: 1,575-540 Kilocycles

POWER OUTPUT: 12.0 Watts

SPEAKER: 8" separate case type; other type optional.

VOICE COIL: E-9 3 Ohms; E-10 3 Ohms

POWER SUPPLY: 6-volt storage battery

AMPERE DRAIN: 8 Amperes

DIAL TUNING RATIO: 16:1

CHASSIS SHIPPING WEIGHT: 19 pounds

SENSITIVITY: (Given below for 1 Watt output—1.7 Volts across speaker voice coil.)

6A8 Mixer Gr. (1,000 K.C.) 370.00 Microvolts
6K7 R. F. Grid (1,000 K. C.) 18.0 Microvolts
*Antenna Input (1,000 K. C.) 3.5 Microvolts
*50 uuf. dummy antenna input

MODEL No. 42
Bottom Chassis View

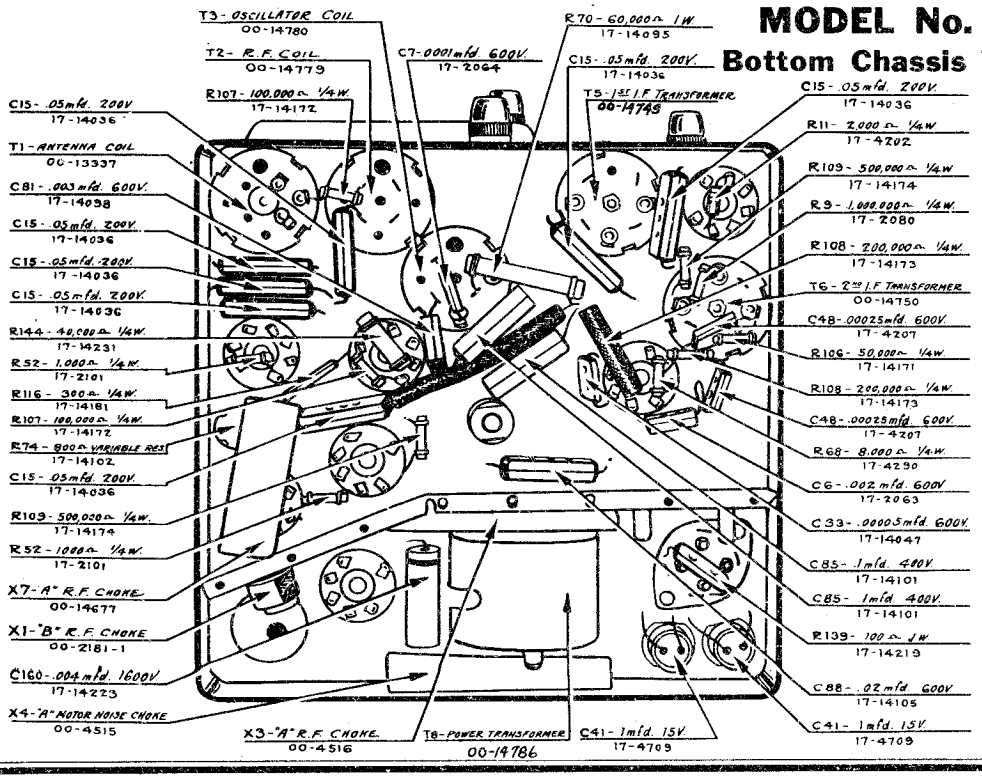

TUBES:
6K7 R. F. Amplifier
6A8 1st Detector-Oscillator
6K7 I. F. Amplifier
6Q7G 2nd Detector, 1st Audio Amplifier, A. V. C.
6C5G 2nd Audio Amplifier, driver
6N7G Push Pull Audio Output Amplifier
6X5G or 0Z4 Full Wave Rectifier

©John F. Rider, Publisher

Voltage, Alignment Specifications

NOBLITT-SPARKS INDUSTRIES, INC.

MODELS 58, 58A, 88
Chassis RE29, RE35
Schematic, Parts

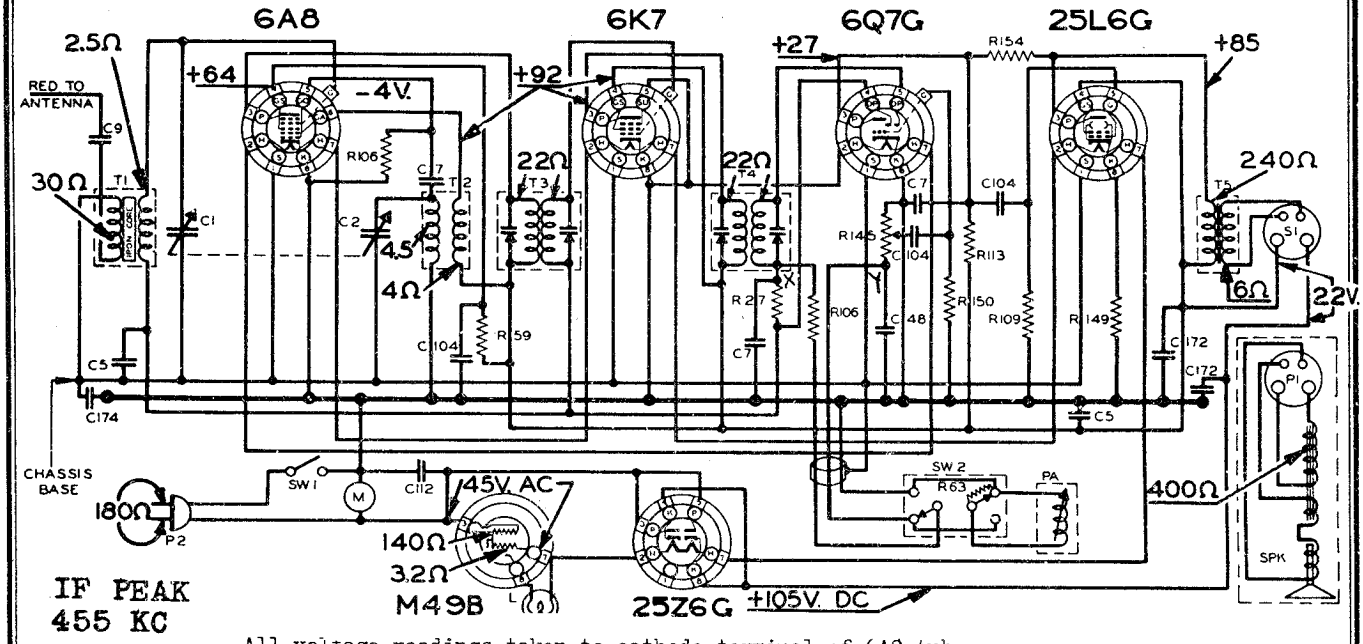

All voltage readings taken to cathode terminal of 6A8 tube.
*Circuit diagram of Radio Chassis RE29 is same as above except that R106 is connected between points X & Y and phono switch and pickup is not included.

RESISTORS

Ref. No.	Part No.	Description	Price
R59	17-4191	15,000 ohms ½ watt	.20
R27	17-4788	2,000,000 ohms ½ watt	.20
R106	17-14171	50,000 ohms ½ watt	.20
R109	17-14174	500,000 ohms ½ watt	.20
R-113	17-14178	250,000 ohms ½ watt	.20
R149	17-14241	150 ohms ½ watt	.20
R150	17-14242	5,000,000 ohms ½ watt	.20
R154	17-14244	1,500,000 ohms ½ watt	.20

CONDENSERS

Ref. No.	Part No.	Description	Price
C7	17-2064	.0031 mfd. 600 volt	.25
C104	17-4206	.01 mfd. 200 volt	.30
C48	17-4207	.00025 mfd. 600 volt	.25
C9	17-4292	.001 mfd. 600 volt	.25
C5	17-14015	.05 mfd. 200 volt	.30
C112	17-14139	.05 mfd. 400 volt	.40
C172 A & B	17-14239	20-20 mfd. 150 volt	2.25
C174	17-14248	.2 mfd 400 volt	.50
C1-C2	17-15900	Tuning Condenser	3.00

COILS and TRANSFORMERS

Ref. No.	Part No.	Description	Price
T2	00-15979	Oscillator Coil	.75
T-5	00-15980	Output Transformer	1.50
T3	00-16060	1st I.F. Transformer	1.50
T4	00-16061	2nd I.F. Transformer	1.50
T1	00-16083	Antenna Coil	.75

SPEAKERS, DIAL PARTS, CABINETS & MISCELLANEOUS

Part No.	Description	Price
10-5181	Chassis Mounting Screw per doz.	.15
28-5188	Dial drive pulley (rubber)	.05
83-2357	Grille cloth (ivory rayon)	.15
29-13470	Tuning shaft retaining washer	.02
29-13583	Dial drive cord (16" long)	.20
24-13360	Dial drive takeup spring	.05
17-14997	Needle cup	.10
17-14998	Needle cup cover	.05
19-15476	Tuning condenser drive pulley	.30
17-15791E	Line cord and plug	.40
29-15905	Cabinet (58A- Ivory)	6.50
32-15907	Chassis bottom cover	.35
29-15909	Cabinet (58-Black)	3.50
32-15915	Tuning shaft bracket	.10
29-15916	Cabinet back cover	.25
17-15926A	Volume control switch	1.00
29-15929	Knob (wood-walnut finish)	.20
29-15937	Knob (walnut bakelite)	.15
25-15958	Tuning Shaft	.10
17-15973	Dial light socket and clip	.20
81-15974	Dial glass (black background)	.70
17-15983	Speaker (5" diameter)	4.00
17-15989	Speaker (6" diameter)	4.50
81-16015	Dial glass (brown background)	.70
27-16020	Cabinet (Model 88)	11.75
17-16021	Phono pickup and arm	6.25
17-16022	Phono turntable and motor	8.50
29-16024	Knob (ivory bakelite)	.15
17-16065	Radio-Phono switch	.40
29-16063	Knob (Radio-Phono switch)	.15
41-16071	Bezel (Model 88)	1.00

BALANCING INSTRUCTIONS

CAUTION: The signal generator dummy antenna should be grounded to the radio chassis through a .10 mfd. condenser. Do not make a direct connection as the chassis of the radio is connected directly to one side of the 110 volt light lines and may seriously damage the balancing oscillator attenuator if connected without a blocking condenser

Operation No.	Connect Balancing Oscillator to:	Balancing Oscillator Frequency	Adjust Padder Number	Dial Setting
1.	*6A8 Grid Cap	455 KC	1,2,3,& 4	600 Kc
2.	Antenna Wire	1725 KC	5	1725 KC
3.	Antenna Wire	1400 KC	6	1400 KC

* I.F. sensitivity should be 150 microvolts minimum for 50 milliwatts output.

DIAL LIGHT - Mazda 51
FREQUENCY RANGE - 1725 to 545 KC
POWER OUTPUT - 2.0 Watts
TUBES

6A8 - 1st Detector, oscillator
6K7 - I.F. Amplifier
6Q7G - 2nd Detector, 1st audio
25L6G - Power output audio
25Z6G - Rectifier
M-49B - Balast resistor

CABINET DIMENSIONS
Model 58-58A width 11 1/2" height 8" depth 6 1/4"
Model 88 width 14 1/4" height 10 3/4" depth 11 1/8"

SPEAKER - 5" Electrodynamic; 3 ohm voice coil
VOLTAGE and FREQUENCY - AC - 119 volts, 40-60 cycles
DC -110 volts
SENSITIVITY - 80 Microvolts minimum for 500 milliwatts output
WATTS POWER CONSUMPTION - 40 watts
APPROVED BY UNDERWRITERS

©John F. Rider, Publisher

MODELS 58,58A,88
Chassis RE29,RE35
Socket,Trimmers
Layout

NOBLITT-SPARKS INDUSTRIES, INC.

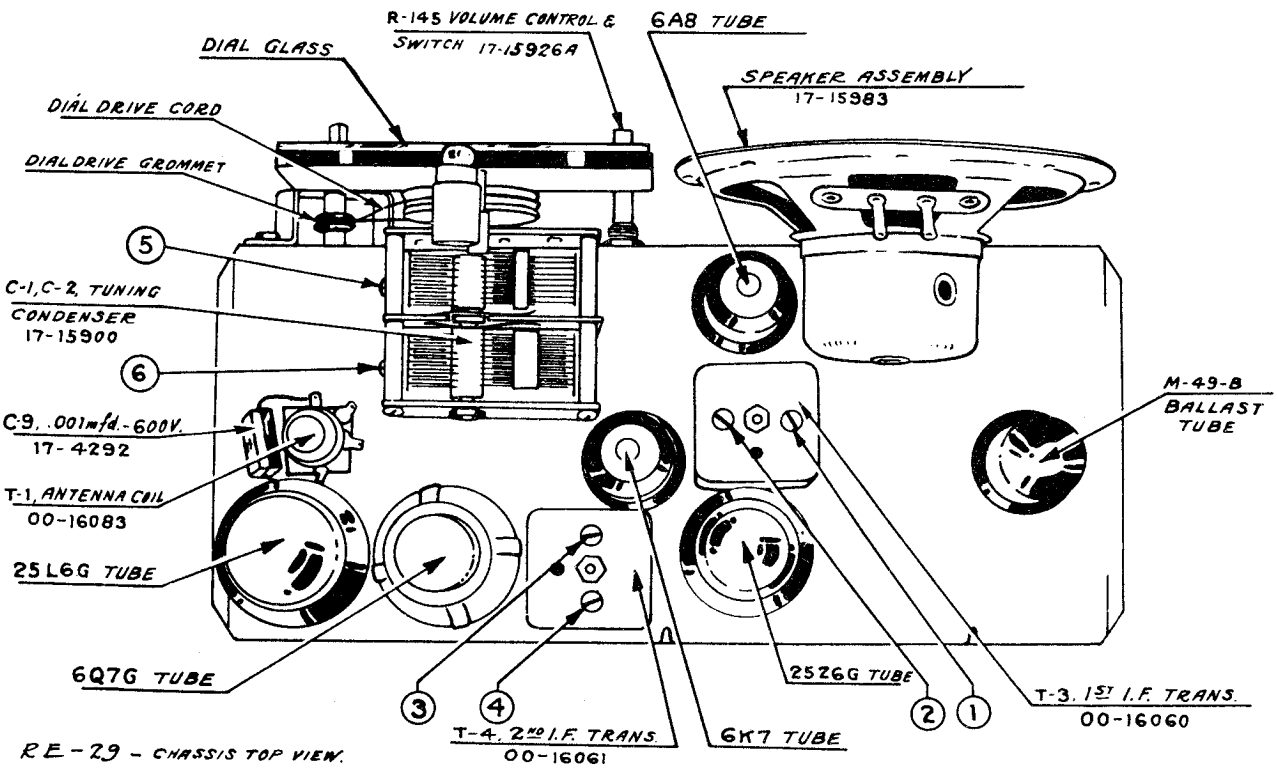

RE-29 - CHASSIS TOP VIEW.

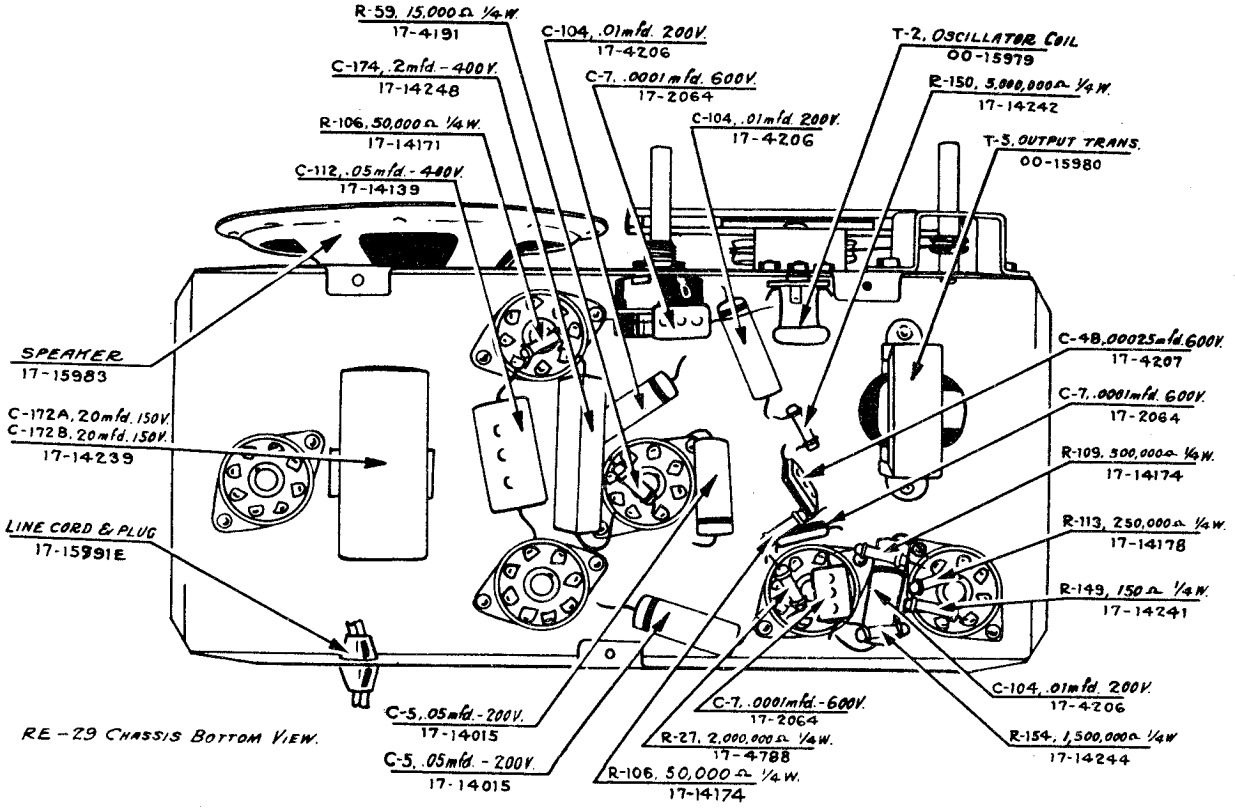

RE-29 CHASSIS BOTTOM VIEW.

©John F. Rider, Publisher

Parts, Alignment Specifications

NOBLITT-SPARKS INDUSTRIES, INC.

MODEL 68
Chassis RE26
Schematic, Voltage

ARVIN RADIO CHASSIS RE26 RADIO MODEL NUMBER 68

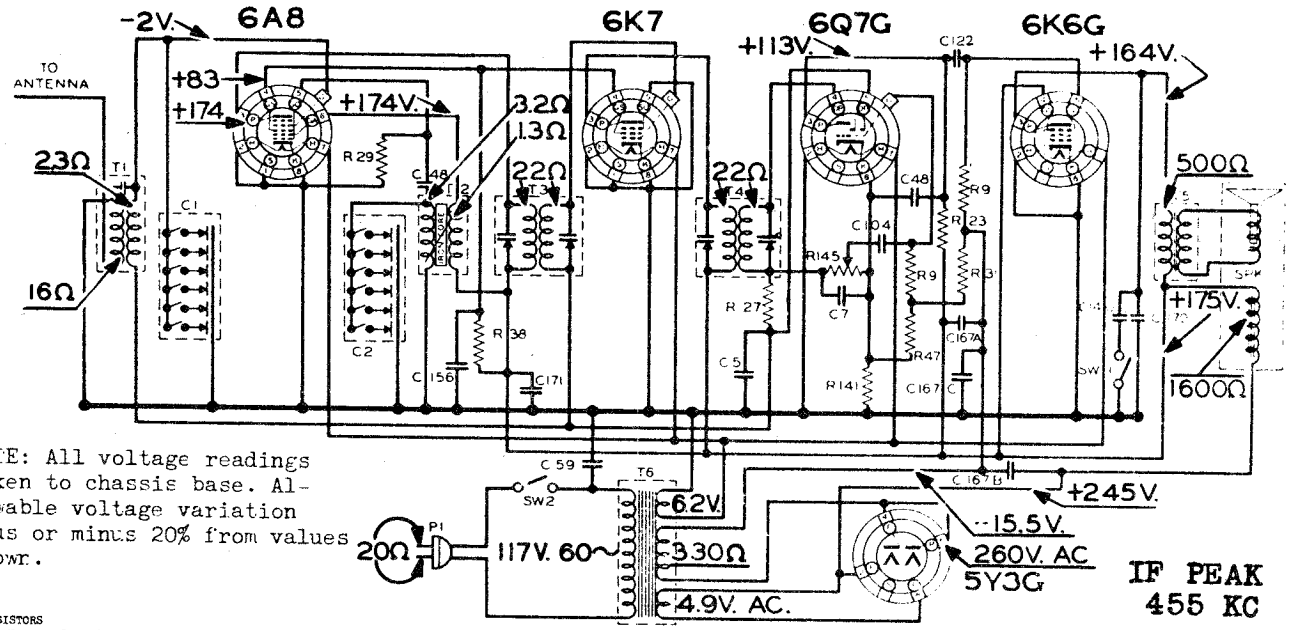

NOTE: All voltage readings taken to chassis base. Allowable voltage variation plus or minus 20% from values shown.

RESISTORS

Ref. No.	Part No.	Description	Price
R29	17-2060	50,000 ohm ½ watt	.20
R31	17-2066	260 ohm ½ watt	.20
R5	17-2070	500,000 ohm ½ watt	.20
R9	17-2080	1,000,000 ohm ½ watt	.20
R23	17-3011	250,000 ohm ½ watt	.20
R27	17-4788	2,000,000 ohm ½ watt	.20
R38	17-14028	30,000 ohm ½ watt	.20
R47	17-14059	50 ohm ½ watt	.20
R141	17-14224	60 ohm ½ watt	.20

CONDENSERS

Ref No.	Part No.	Description	Price
C7	17-2064	.0001 mfd - 600 Volt	.25
C122	17-2189	.01 mfd. - 400 Volt	.35
C140	17-2214	.02 mfd. - 400 Volt	.35
C104	17-4206	.01 mfd. - 200 Volt	.30
C48	17-4207	.00025 mfd. 600 Volt	.25
C156	17-4397	.05 mfd. - 400 Volt	.35
C5	17-14015	.05 mfd. - 200 Volt	.30
C167 A,B,C	17-14233	10-10 mfd. 450 Volt,20 mfd. 25 Volt	2.50
C170	17-14237	.005 mfd. - 400 Volt	.25
C171	17-14238	.1 mfd. - 400 Volt	.30
C59	17-14615	.01 mfd. - 400 Volt	.35
C1-C2	17-15925	6 button trimmer type conden.	5.00

COILS AND TRANSFORMERS

Ref. No.	Part No.	Description	Price
T6	00-15919	Power Transformer	3.50
T5	00-15920	Output Transformer	1.50
T1	00-15921	Antenna Coil	.75
T2	00-15922	Oscillator Coil	.75
T3	00-15923	1st I.F. Transformer	1.50
T4	00-15924	2nd I.F. Transformer	1.50

SPEAKERS, DIAL PARTS, CABINETS, MISCELLANEOUS

Part No.	Description	Price
29-3136	Instruction sheet	.02
83-2356	Grille Cloth	.15
29-3120	Call letter sheets (per set)	.20
29-3131	Carton	.35
29-3136	Instruction sheet	.02
29-13450	Knob - Push Button	.10
29-13456	Celluloid Call Letter Window Strip	.10
25-13461	Thumb Screw (escutcheon mounting)	.02
17-15791E	Line cord and Plug	.40
17-15904	5" Speaker	4.00
29-15908	Cabinet (walnut bakelite)	5.50
41-15914	Escutcheon Plate	.40
29-15916	Cabinet back (black fibre)	.25
17-15926A	Volume Control and Switch	1.00
17-15927	Tone Control Switch	.35
29-15937	Knob (walnut bakelite)	.15
29-15963	Knob-Variator (walnut bakelite)	.15

BALANCING INSTRUCTIONS

All adjustments to be made for maximum output. Volume-and tone controls in high position. Standard output is indicated by a reading of 1.3V AC across the speaker voice coil.

Connect Balancing Oscillator To:	Balancing Oscillator Frequency	Depress Push Button No.	Adjust Padder No.	Padder Frequency Range
6A8 Grid Cap	455 KC	F	1,2,3, & 4	
* Red Antenna Wire	1400 KC	A	5 and 6	1725 to 1350 KC
Red Antenna Wire	1200 KC	B	7 and 8	1500 to 1150 KC
Red Antenna Wire	1000 KC	C	9 and 10	1300 to 900 KC
Red Antenna Wire	800 KC	D	11 and 12	1100 to 650 KC
Red Antenna Wire	700 KC	E	13 and 14	1100 to 650 KC
Red Antenna Wire	600 KC	F	15 and 16	900 to 5540 KC

Padders 5,7,9,11,13 and 15 are oscillator padders and will cover the range of frequencies shown above.

*VARIATOR KNOB should be set to mid-position as indicated by setting white line opposite dot on cabinet front.

ELECTRICAL AND MECHANICAL SPECIFICATIONS

TUBES
6A8 - 1st Detector, Oscillator
6K7 - I.F Amplifier
6Q7G - 2nd Detector, AVC, Audio Amplifier
6K6G - Power Output Amplifier
5Y3G - Rectifier
DIAL LIGHT: Mazda 51
FREQUENCY RANGE: 1725 to 540 KC
POWER OUTPUT: 2.3 Watts

SPEAKER: 5" Electro Dynamic, 3 ohm Voice Coil
1600 Ohm field
VOLTAGE & FREQUENCY: 117 V-60 cycles; AC only
WATTS POWER CONSUMPTION: 45 watts
SENSITIVITY: 20 microvolts minimum for 500 milliwatts output
APPROVED BY: Underwriters
LICENSED UNDER: RCA & Hazeltine Patents
CHASSIS DIMENSIONS: width 10 3/4" height 6" depth 6 1/2"
CABINET DIMENSIONS: width 11 1/2" height 8" depth 6 1/4"
AUTOMATIC TUNING: 6 Push Button, Trimmer Tuned.

©John F. Rider, Publisher

MODEL 68
Chassis RE26
Socket, Trimmer
Layout

NOBLITT-SPARKS INDUSTRIES, INC.

MODEL RE26 CHASSIS TOP VIEW and PADDER CONDENSER LOCATIONS

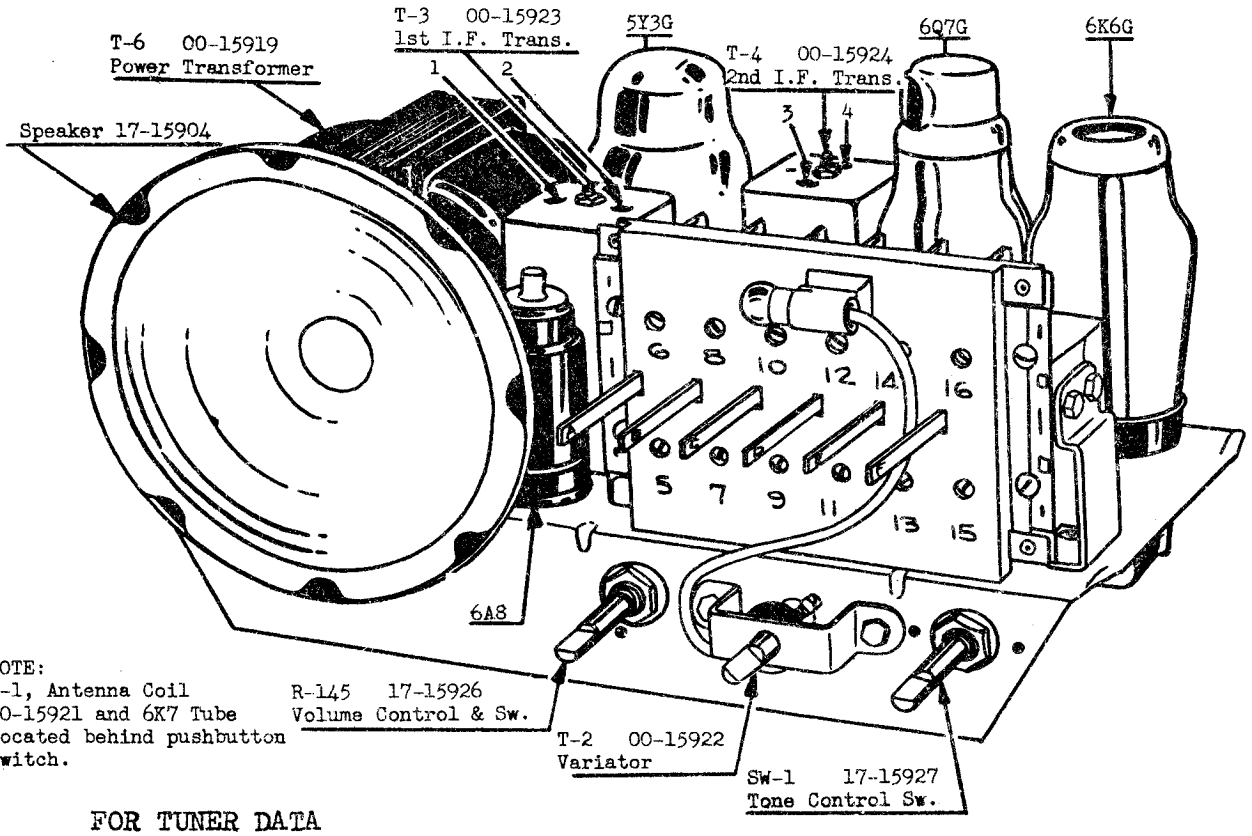

NOTE:
T-1, Antenna Coil 00-15921 and 6K7 Tube located behind pushbutton switch.

FOR TUNER DATA
SEE INDEX

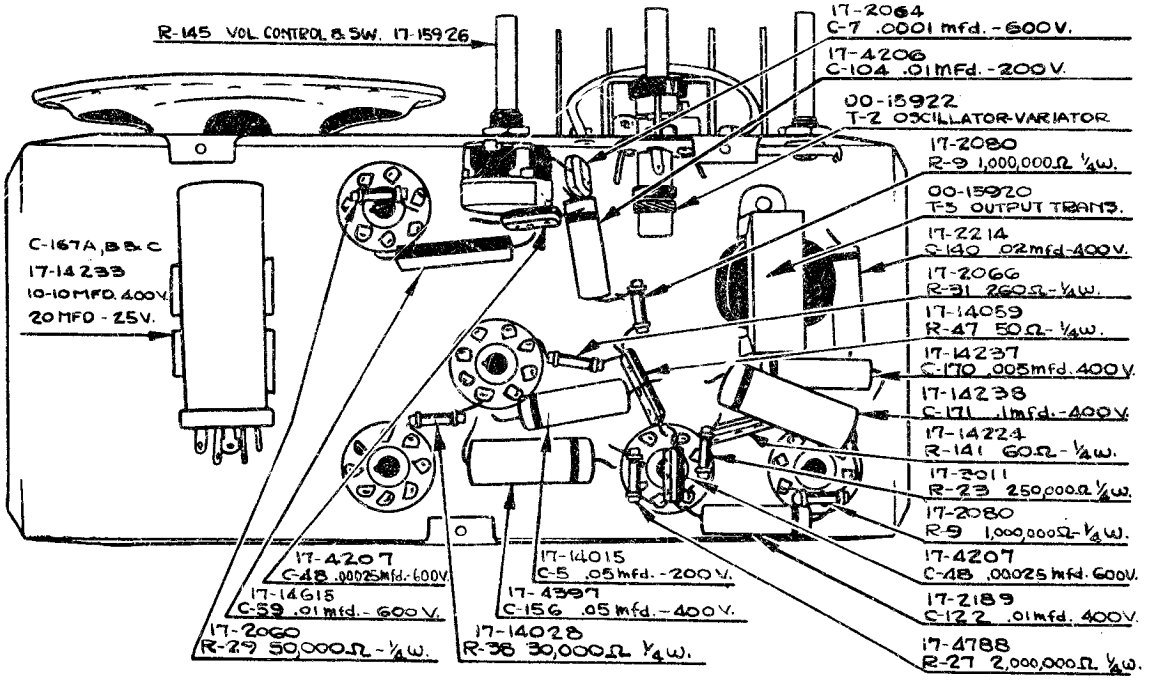

©John F. Rider, Publisher

NOBLITT-SPARKS INDUSTRIES, INC.

MODEL 78
Schematic, Voltage
Trimmers, Alignment
Parts

ARVIN RADIO CHASSIS RE37 RADIO MODEL No. 78

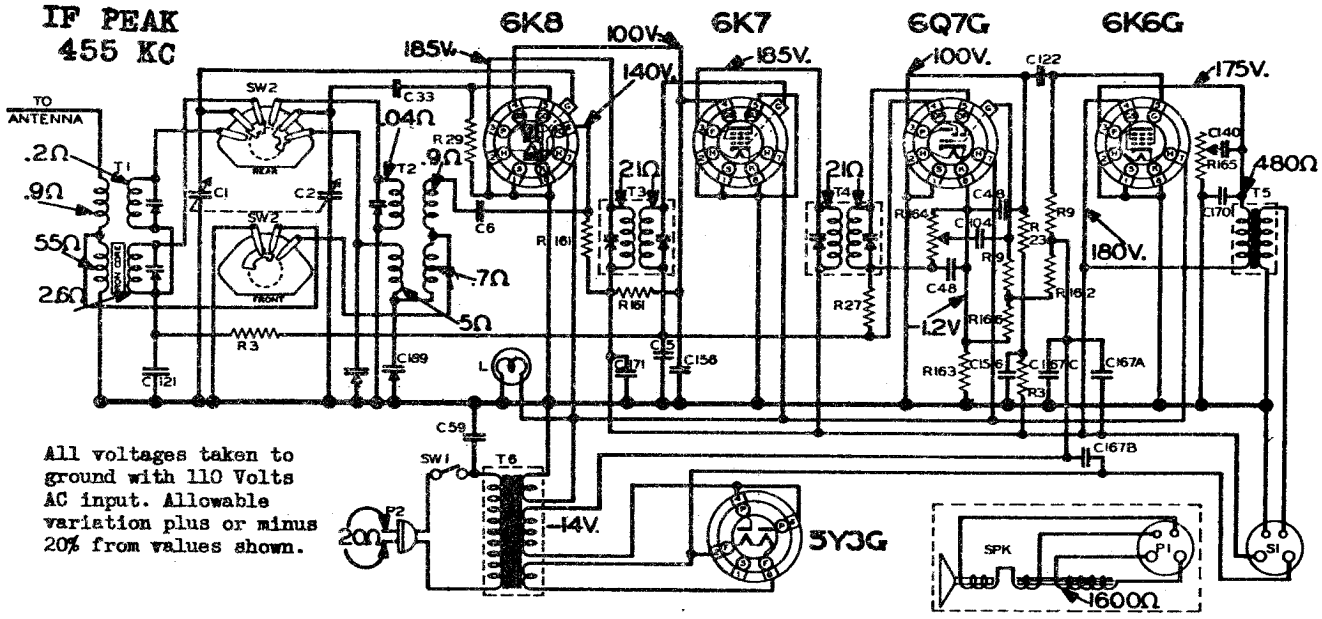

All voltages taken to ground with 110 Volts AC input. Allowable variation plus or minus 20% from values shown.

RESISTORS

Ref. No.	Part No.	Description	Price
R29	17-2066	50,000 ohm, 1/4 watt	.20
R3	17-2068	100,000 ohm, 1/4 watt	.20
R9	17-2080	1,000,000 ohm 1/4 watt	.20
R23	17-3011	250,000 ohm, 1/4 watt	.20
R27	17-4788	2,000,000 ohm, 1/4 watt	.20
R161	17-14267	15,000 ohm, 1/2 watt	.20
R162	17-14268	280 ohm, 1/2 watt	.20
R163	17-14269	30 ohm, 1/4 watt	.20
R166	17-14270	40 ohm, 1/4 watt	.20

CONDENSERS

C6	17-2063	.002 mfd. 600W	.25
C104	17-4206	.01 mfd. 200V	.30
C122	17-2189	.01 mfd. 400V	.35
C140	17-2214	.02 mfd. 400V	.35
C48	17-4207	.00025 mfd. 600V	.25
C156	17-4397	.05 mfd. 400V	.35
C5	17-14015	.05 mfd. 200V	.30
C32	17-14047	.00005 mfd. 600V	.25
C167A,B,C	17-14233	10-10 mfd. 450V 20 mfd. 25V	2.50
C170	17-14237	.005 mfd. 400V	.25
C171	17-14238	.1 mfd. 400V	.40
C121	17-14257	.02 mfd. 200V	.30
C189	17-14266	Series Padder	.75
C59	17-14615	.01 mfd. 400V	.35
C1 & 2	17-15990	Tuning Condenser	4.00

COILS AND TRANSFORMERS

T5	00-16093	Output Transformer	1.50
T1 & 2	00-16094	Antenna and oscillator coil assem	3.00
T3	00-16095	1st I.F.Transformer	1.50
T4	00-16096	2nd I.F.Transformer	1.50
T6	00-16099	Power Transformer	3.50

SPEAKER, DIAL PARTS, CABINET & MISCELLANEOUS

29-3135	Carton	.50
29-3145	Instruction sheet	.02
29-3150	Call Letter sheets	.30
28-5186	Dial Drive Pulley	.10
17-13249	Speaker socket	.15
34-13660	Dial Drive Cord Spring	.05
29-13583	Dial Drive Cord	.10
17-13905	Dial Light (Mazda 44)	.15
17-15791E	Line Cord and Plug	.40
27-15912	Cabinet	10.00
29-15929	Knob	.15
17-15960	Speaker	4.00
29-16013	Knob (Push Button)	.10
41-16055	Escutcheon Plate (Push Button)	.35
17-16086	Band Switch	.75
41-16089	Escutcheon (dial)	1.00
17-16097	Volume Control	.75
17-16098	Tone Control and Switch	1.00
62-16100	Dial Glass	.70

BALANCING INSTRUCTIONS

ARVIN MODEL 78 - - RE37 CHASSIS

(All sensitivities given for 200 milliwatts output = .81 V.A.C. across voice coil)

Operation No.	Connect Sig. Generator To	Input Frequency	Adjust Padder No.	Dial Setting	Band Switch Position	Sensitivity
1.	6K8 GRID	455 KC	1,2,3,& 4	600 KC	Broadcast	150 uv
2.	Antenna Wire	1725 KC	5	*1725 KC	Broadcast	
3.	Antenna Wire	1400 KC	6	1400 KC	Broadcast	35 uv
4.	Antenna Wire	600 KC	7	600 KC	Broadcast	35 uv
5.	Antenna Wire	18.0 MC	8	*18.0 MC	Short Wave	
6.	Antenna Wire	15.0 MC	9	15.0 MC	Short Wave	**40 uv

* Condenser should be wide open with dial pointer parallel to horizontal line above dial calibration.

** Sensitivity limit at 7.0 MC = 75 uv.

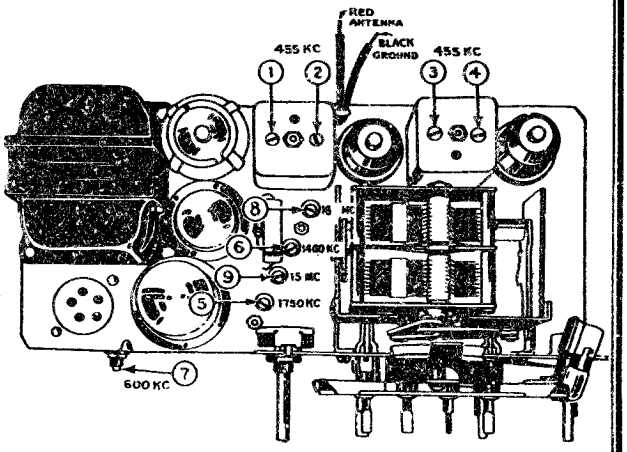

©John F. Rider, Publisher

MODEL 78
Chassis RE37
Socket,Layout

NOBLITT-SPARKS INDUSTRIES, INC.

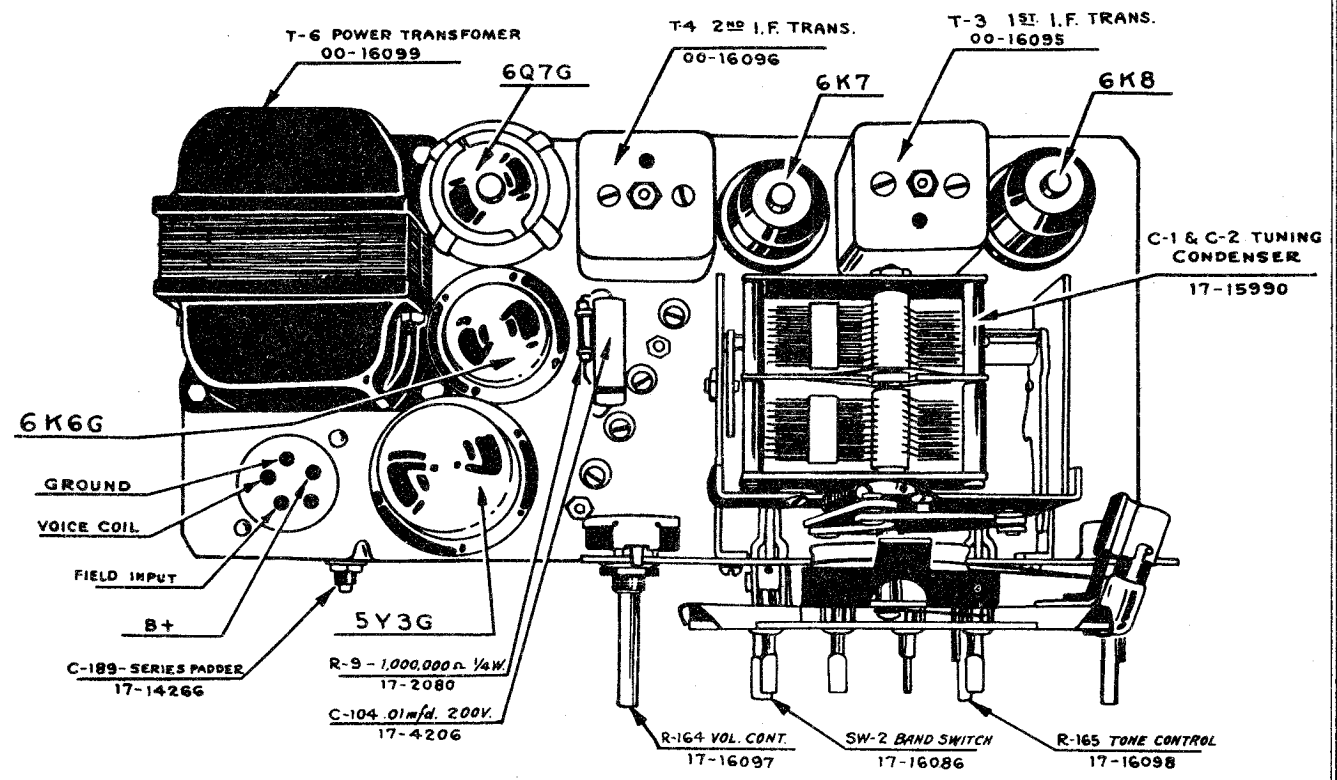

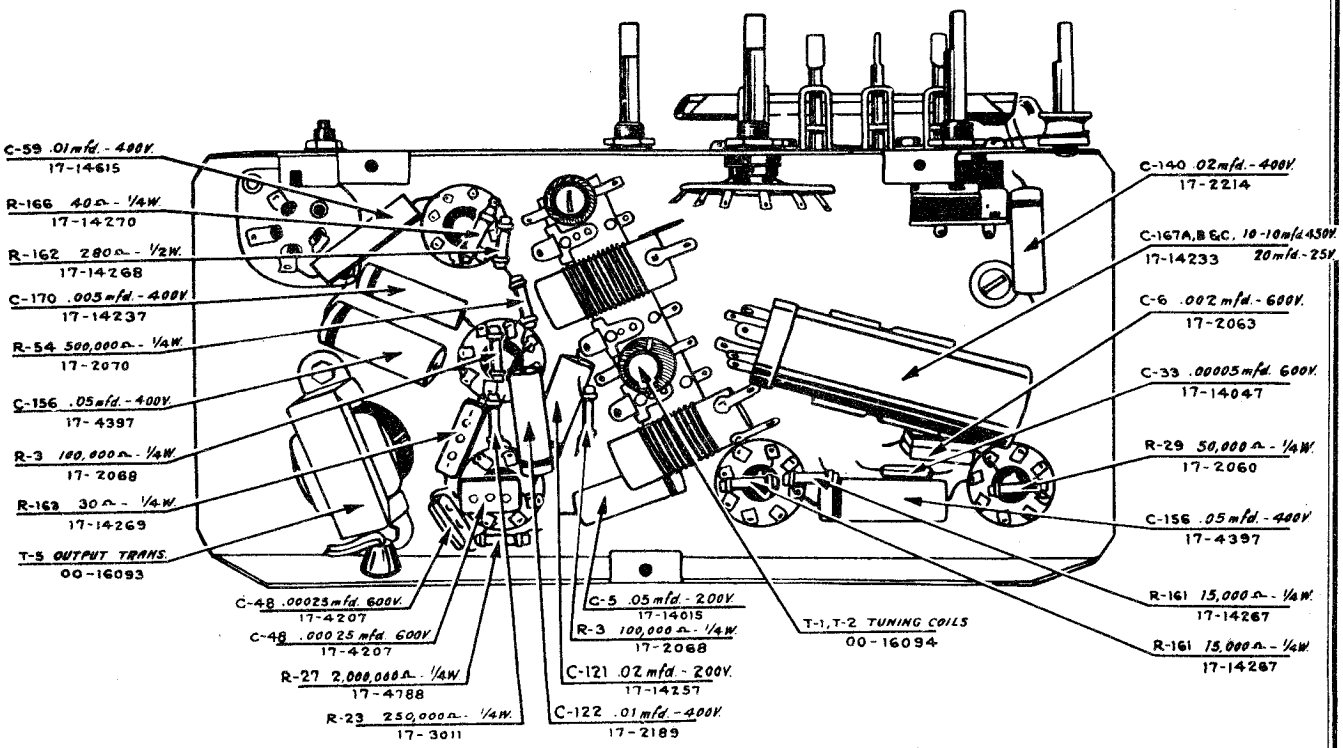

©John F. Rider, Publisher

MODEL 608

NOBLITT-SPARKS INDUSTRIES, INC.

Voltage, Alignment
Resistance, Specs.

MODEL 608 ARVIN RADIO

ELECTRICAL SPECIFICATIONS

TUBES:

6A7—1st Detector-Oscillator
6D6—1st I. F. Amplifier
6Q7G—2nd Detector, AVC 1st Audio Amplifier
25B6G—Audio Output Power Amplifier
25Z5—Rectifier
BK49D—Ballast

FREQUENCY RANGE:

Band A—550 to 1725 Kilocycles
Band B—2.00-6.27 megacycles

POWER OUTPUT: 1.9 watts

SPEAKER: 6″ Dynamic, 3 ohm voice coil

VOLTAGE AND FREQUENCY: 110 V. AC or DC; 25 to 133 cycles

SENSITIVITY:

Band A— 75 microvolts minimum for 50 milliwatts output
Band B—120 microvolts minimum for 50 milliwatts output

INTERMEDIATE FREQUENCY:

150 microvolts minimum for 50 milliwatts output; 456 Kilocycles

WATTS POWER CONSUMPTION: 70 watts

POINT TO POINT RESISTANCES

25Z5

Heater to 110 V. Line Cord	130 Ω
Cathode to B+	0 Ω
Cathode to Ground	3,020 Ω
Plate to Ground	3:170 Ω
Plate to Line Cord	0 Ω

BK49D

Terminal 3 to 2	15 Ω
Terminal 3 to 8	150 Ω
Terminal 3 to 7	30 Ω
Resistance across 110 V. plug	165 Ω
110 V. line to ground	265 Ω

6A7

Heater to 110 V. Line Cord	148 Ω
Cathode	100 Ω
Oscillator Grid	50,100 Ω
Anode Grid to B+	1.4 Ω
Screen to B+	20,000 Ω
Plate to B+	11 Ω
Control Grid	1,500,000 Ω

6D6

Heater to 110 V. Line Cord	154 Ω
Cathode	100 Ω
Suppressor	100 Ω
Screen to B+	0 Ω
Plate to B+	11 Ω
Control Grid	1,500,000 Ω

6Q7G

Heater to 110 V. Line Cord	160 Ω
Cathode	0 Ω
Diode	0 Ω
Diode	550,000 Ω
Plate to B+	200,000 Ω
Control Grid	2,000,000 Ω

25B6G

Heater to 110 V. Line Cord	165 Ω
Cathode	0 Ω
Control Grid	750,000 Ω
Screen to B+	0 Ω
Plate to B+	205 Ω

All readings taken to ground unless otherwise specified.

COIL AND TRANSFORMER RESISTANCES

Oscillator Coil Sec. (Broadcast)	5.2 Ω
Oscillator Coil Pri. (Short Wave)	1.4 Ω
Oscillator Coil Sec. (Short Wave)	.6 Ω
1st I. F. Transformer Primary	11.0 Ω
1st I. F. Transformer Secondary	11.0 Ω
2nd I. F. Transformer Primary	11.0 Ω
2nd I. F. Transformer Secondary	11.0 Ω
Output Transformer Primary	205.0 Ω
Antenna Coil Primary (Broadcast	60.0 Ω
Antenna Coil Sec. (Broadcast)	3.0 Ω
Antenna Coil Pri. (Short Wave)	.03 Ω
Antenna Coil Sec. (Short Wave)	.02 Ω
Oscillator Coil Pri. (Broadcast	1.4 Ω
Output Transformer Secondary	.3 Ω
"B" Filter Choke	250.0 Ω
Wave Trap	14.0 Ω
Speaker Field	3,000.0 Ω

FOR SCHEMATIC
SEE INDEX

MODEL 608 SOCKET VOLTAGES

Tube	Heater	Cathode	Suppressor Grid	Screen Grid	Plate	Oscillator *Grid	Anode Grid	Diode Plates	Control Grid
6A7	6.3	1.6	.....	90	100	3-7 V.	100	.....	0
6D6	6.3	1.6	1.6	100	100	.....	.....	.....	0
6Q7G	6.3	0	.....	.....	.....	.....	.....	0	1.5
25B6G	25.0	0	.....	100	100	.....	.....	.....	—15
25Z5	25.0	100	.....	.....	100 (A.C.-D.C.)	.....	..	.....	.....
BK49D	Total drop terminals 3 to 7—41.1 volts A. C. or D. C.				or D. C.)	.....		.....	.....

Readings taken with a vacuum tube voltmeter and no input signal. With 100,000 microvolts input 6A7 and 6D6 grid bias will be approximately 20 volts.

Oscillator grid voltage 600 K. C. to 1500 K. C.

BALANCING INSTRUCTIONS

1. Connect the balancing oscillator to the grid cap of the 6A7 tube after removing the grid clip. With an input signal of 456 K. C., adjust padders 1, 2, 3 and 4 to maximum output. The Intermediate Frequency sensitivity should be at least 150 microvolts for 50 milliwatts output.

2. Rotate the tuning condenser to wide open position. Check the dial pointer to see that it is parallel to the horizontal line across the dial face.

3. Connect the signal generator to the antenna lead wire (green) on the rear of the receiver through a 200 micromicrofarad dummy antenna. With the dial pointer set to 1400 kilocycles and a similar input from the signal generator adjust padder No. 5 to resonance. Adjust padder No. 6 to maximum output.

4. Set dial pointer to 600 K. C. and with an input frequency of 600 K. C. adjust padder No. 7 to resonance. Return to 1400 K. C. and recheck padders 5 and 6.

5. Turn band switch to short wave position. Set dial pointer to 5 megacycles and with an input of the same frequency adjust padder No. 8 to resonance. Adjust padder No. 9 for maximum output.

6. With an input of 456 K. C. into the antenna wire of the receiver adjust padder No. 10 for minimum output. This is the wave trap circuit for 456 kilocycle code interference.

©John F. Rider, Publisher

MODEL 608
Socket, Trimmers
Layout

NOBLITT-SPARKS INDUSTRIES, INC.

608 Top Chassis View

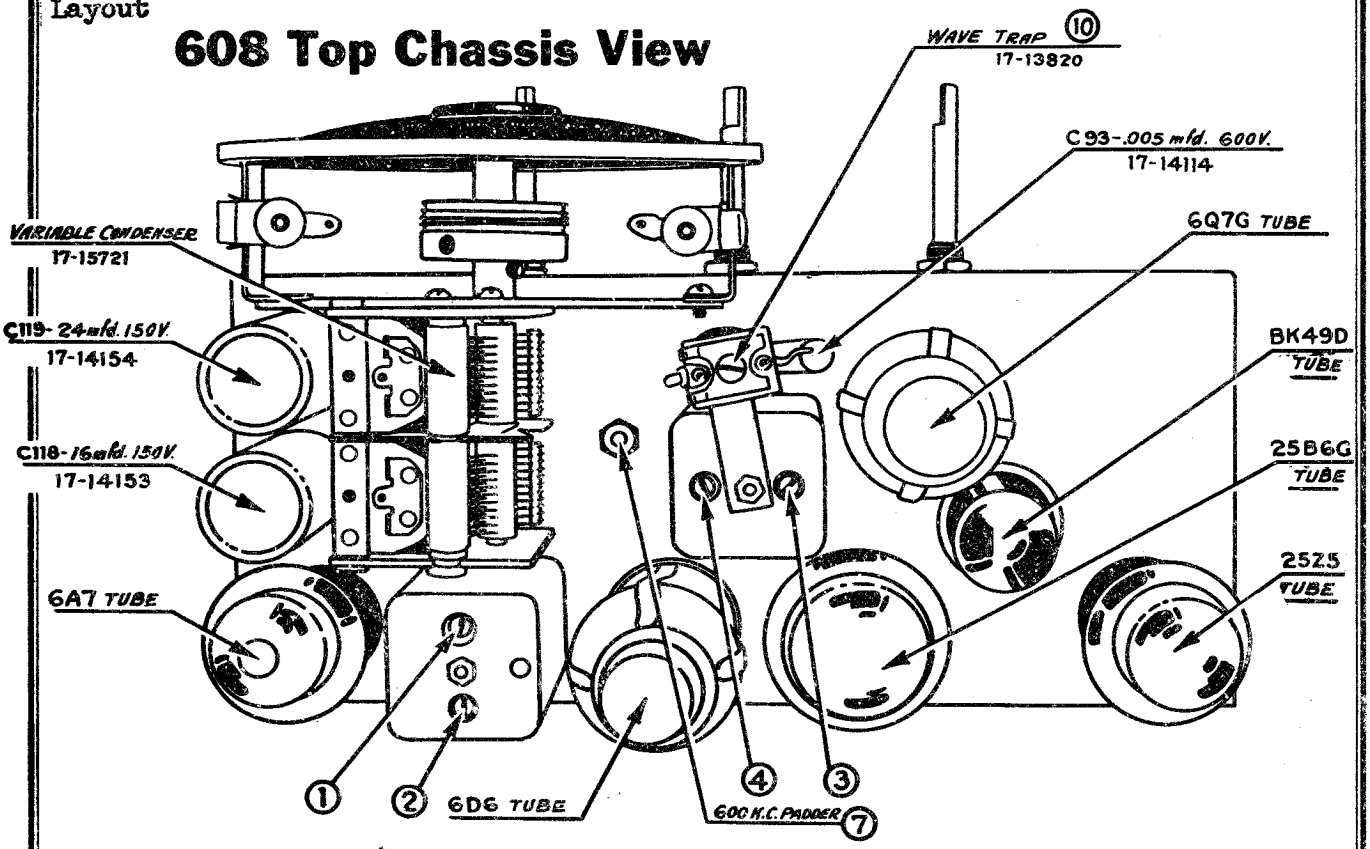

FOR SCHEMATIC SEE INDEX

608 Bottom Chassis View

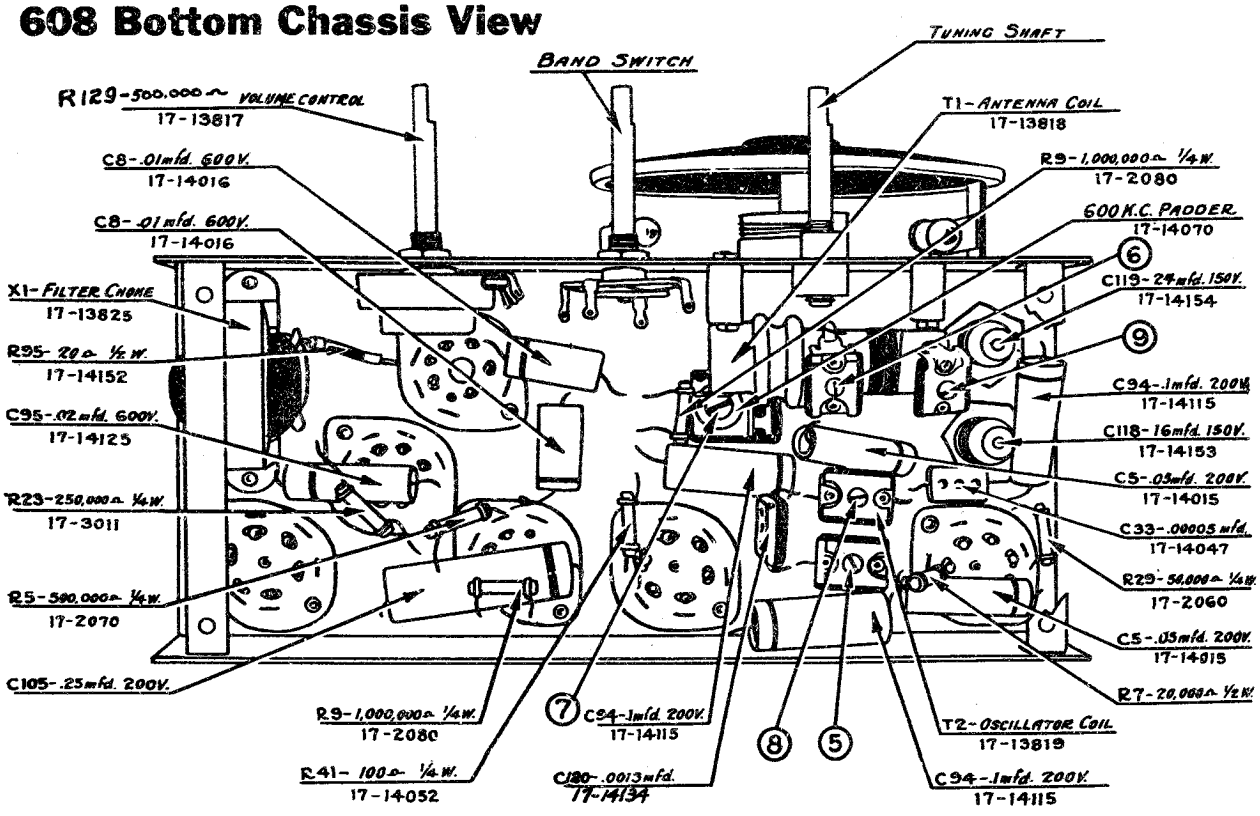

©John F. Rider, Publisher

©John F. Rider, Publisher

INSTRUCTIONS FOR SETTING UP ARVIN PRESTO-STATION-CHANGER

The Arvin Presto-Station-Changer offers a means whereby ten stations may be pre-selected and set up on the buttons so that thereafter an operator may receive any one of these ten stations by a simple direct mechanical motion applied to the dial.

Each button on the Arvin Presto-Station-Changer covers a certain group of frequencies on the dial. Identifying these buttons in a clockwise direction from the wide space between two of the buttons on the dial, each button covers a group of frequencies as follows:

(1) End of scale to 1630 K. C.
(2) 1630 to 1420 K. C.
(3) 1420 to 1210 K. C.
(4) 1210 to 1030 K. C.
(5) 1030 to 880 K. C.
(6) 880 to 770 K. C.
(7) 770 to 680 K. C.
(8) 680 to 620 K. C.
(9) 620 to 575 K. C.
(10) 575 K. C. to end of scale.

With these above bands in mind for each button, one should first select a station for each button whose transmission frequency falls within the band for that button. A list of these stations together with their frequencies should be made.

With this list made out, the actual operation of setting up the stations on the Arvin Presto-Station-Changer may be made. From this point on, the instructions will be general, applying to any of the buttons.

The receiver should be placed in operating condition by connecting an antenna and plugging the line cord into a suitable outlet. The receiver is turned on by means of the knob in the center of the front panel. This knob has three positions. In the full counter-clockwise position (No. 1) the receiver is "off." In the center position (No. 2) the receiver is turned "on" and the automatic frequency control circuits are in operation. In the full clockwise position (No. 3) the set remains "on," but the automatic frequency control circuit no longer functions. This third position is provided mainly as a convenience in setting up the Arvin Presto-Station-Changer, and for those who desire to accomplish exact manual tuning prior to holding the station in with the automatic frequency control circuit. To set up the Arvin Presto-Station-Changer, this center switch should then be in the maximum clockwise position, i. e. position No. 3.

The band switch should be in the broadcast or full counter-clockwise position.

Unscrew the center knob by securely holding the escutcheon which covers the ten buttons, and turning the center knob in a counter-clockwise direction. Remove both the center knob and the center escutcheon, exposing the buttons beneath.

Tune in one of the above selected stations manually. It will be noted that the button corresponding to the band in which this station falls is now approximately at the bottom of the dial. Loosen this button by turning the bakelite cap counter-clockwise not more than two full turns. Depress the button with the index finger of the left hand and slowly rock the dial mechanism by turning the manual tuning control with the right hand, through an arc determined by the frequencies which this button covers. While the button is depressed, no signal will be heard, due to the action of the muting switch. When this button engages the gate, a distinct click will usually be heard. That this button properly engages the gate can be determined by again turning the manual tuning control with the button depressed and noting that the dial movement is limited to the arc previously described. With the button still depressed, again tune in the desired station, noting the point of exact resonance on the electric eye above. Still keeping this button depressed and "on station," tighten the bakelite cap with the right hand. During this tightening operation, observe the electric eye to be sure that its degree of closure does not change.

To determine that this button has been properly set, turn the dial off-station and, depressing the button just set, return it to its former position of engagement with the gate. The station should again be tuned in. If it is not, loosen the button and repeat the operation just described.

When the button has been properly set, remove the station identification disc from the sheets supplied in the envelope in which these instructions were found. Place this disc in the center of the bakelite cap and push down firmly all around the edge.

There will be found in the envelope containing these instructions another small envelope in which has been placed ten transparent celluloid discs. One of these celluloid discs should be placed in the bakelite cap over the station identification disc and firmly pressed in place. The operation just described for setting up this one button on the Arvin Presto-Station-Changer should be repeated for all other stations chosen as above outlined.

When all stations have been set up, replace the center escutcheon and screw on the center knob.

When using the Arvin Presto-Station-Changer to tune in your favorite stations, the switch in the center of the panel should be in its No. 2 position. To perform the act of tuning, place the index finger on the button carrying the station call letters desired, push the button in firmly and rotate the dial to left or right with this same finger until the dial locks, with this button at the bottom. Withdrawing the finger opens the muting switch, allowing the set to operate.

INSTRUCTIONS FOR SETTING UP ARVIN PUSH-BUTTON TUNING

FIRST: Put the set in operation in accordance with the instruction sheet furnished with the receiver. Next, make a list of the stations that are desired on the push-button selector, arranging them in order as to their assigned frequencies and placing the lowest frequency station at the top of the list, etc.

SECOND: Assign the stations to the buttons, starting with the first button on the left and the station with the lowest frequency—making certain that each station falls into the assigned frequency group for each button as listed below:

10 Button	Kilocycle Coverage	Station Desired	6 Button
1.	530-610		1.
2.	530-610		
3.	590-700		2.
4.	590-700		3.
5.	680-900		4.
6.	680-900		
7.	800-1150		5.
8.	800-1150		
9.	1050-1550		6.
10.	1050-1550		

The above frequency coverage is only approximate for each button, as there is a tolerance at each end of the coverage so that additional stations may be accommodated should there be more stations desired in a given group than there are buttons allotted to that group.

THIRD: The actual adjustment is made as follows: (1) Turn the middle knob on the front of the set clockwise as far as it will go. (2) Tune in manually the first station on the list, then (3) Starting at the left hand side depress the first button and (4) Turn the band switch until the words "push-button" appear in the small lighted opening on the left of the dial.

FOURTH: Turning now to the back of the set: (1) Loosen the electric-eye tube and turn it around so as to be visible from the back of the set when making adjustments. (2) With a long screw-driver, adjust the lower padder screw directly behind the first button until the program from the desired station is audible.

FIFTH: Adjust the padder condenser screw on the middle row directly behind the first button for maximum closing of the electric-eye tube. Follow the same procedure for the padder screw on the top row directly behind the first button.

SIXTH: Now readjust the bottom screw for maximum closing of the electric-eye tube and repeat on the middle and top screws. The first station is now tuned in properly on No. 1 button. Care must be taken so that the same station is tuned in on the lower padder screw as is tuned in manually, as it is possible to confuse another station broadcasting the same program if it is a "chain program" with the original.

SEVENTH: Locate the second station on the list by manually tuning it in with the wave-band switch in the broadcast position. Then change the wave-band switch to push-button station—this time by adjusting the lower padder screw directly behind the second button. Then follow the same procedure as when setting up the first button. Repeat this for the remaining button.

FINALLY: After all buttons are set, the middle knob should be switched to "AFC on" position and left there whenever the Push-Button Station Selector is used.

After all the stations have been selected their respective call letters may be inserted in the escutcheon plate provided in the receiver operating instruction envelope.

Cut out the call letters of the desired stations and place over them one of the small tabs of celluloid provided. Push the call letter and celluloid tab together into the slot provided in the escutcheon.

When all of the tabs have been inserted the escutcheon should be attached to the radio cabinet by the wood screws and trim washers provided.

©John F. Rider, Publisher

MODELS 1237, 1237D, 1247, 1247D and 1427 ARVIN RADIOS

BALANCING INSTRUCTIONS

All sensitivity measurements should be made with a standard output or AC voltmeter connected directly across the voice coil terminals of the speaker. For convenience in checking sensitivity, standard output is obtained when a reading of 1.12 volts is reached. For sensitivity measurements it is necessary to use a calibrated signal generator although any good balancing oscillator is satisfactory for aligning the 12-tube Arvin Radio chassis. If a calibrated signal generator is used for the balancing procedure described, a dummy antenna should be inserted between the radio chassis and the generator as follows:

Broadcast Band: 200 mmf
Mid-band: 400 ohms
Short Wave Band: 400 ohms

SPECIAL NOTE: Place the receiver in operation by turning the AC switch to the extreme right. Switch is located in the center of the radio chassis.

Adjustment of 100 K. C. Intermediate Frequency Stages

Connect the signal generator to the grid cap of the 2nd 6A8G tube through a .002 mfd. condenser. Place a 200,000 ohm resistor between the grid cap of the 2nd 6A8G and the grid clip leading to the 455 K. C. I. F. Transformer. This will maintain the AVC bias on this tube during alignment.

Adjust padders 1, 2, 3 and 4 for maximum output.

Adjustment of Discriminator Circuit with a Vacuum Tube Voltmeter

1. Connect the vacuum tube voltmeter between ground and the No. 8 cathode terminal of the 6H6G discriminator bias rectifier tube.
2. Turn padder No. 5 to maximum clockwise position.
3. Adjust padder No. 6 for minimum voltage as indicated by vacuum tube voltmeter.
4. Short cathode of 6H6G tube to ground and adjust vacuum tube voltmeter to half scale reading. This is done so that voltages either positive or negative with respect to ground potential may be read without the necessity of reversing the voltmeter input terminals. Disconnect 6H6G cathode from ground.
5. Adjust padder No. 5 until same half scale reading is obtained that was selected above when the cathode of the 6H6G tube was grounded.
6. Check this adjustment further by varying the frequency of the signal generator plus and minus noting the maximum positive and negative voltages developed as indicated by the vacuum tube voltmeter. The voltages developed above and below the half scale reading should be equal or at least within 10% of each other. Disconnect the vacuum tube voltmeter.

Adjustment of 355 K. C. Oscillator Coil

1. Set the output of the signal generator to 455 K. C. and adjust padder No. 7 for maximum output.

Adjustment of 455 K. C. Oscillator Coil

1. Connect the signal generator to the grid cap of the first 6A8G tube and with 455 K. C. input adjust padders Nos. 8 and 9 for maximum output.

Adjustment of the Broadcast Band Padders

* Push button models only. See note at bottom of page for details on Arvin 1237 Presto-Station Changer Models.

1. Connect the signal generator through a 200 mmf. dummy antenna to the terminals marked "A" and "G" on the rear of the radio chassis.
2. Check the setting of the dial pointer by rotating the tuning condenser completely into mesh. The dial pointer should line up with the end of the calibrated dial scale. Re-set the pointer if it is not adjusted properly.
3. Set pointer to 1,400 K. C. and adjust padder No. 10 for resonance. This padder is located on the underside of the chassis on the rear section of the wave switch on all Push Button Model 12-tube Arvin Radio chassis.
4. Adjust padders 11 and 12 for maximum output. These padders are also located on the band switch on the center and front sections respectively.
5. Rotate the dial pointer to 600 K. C. and adjust series padder No. 13 for maximum output. It is advisable to then return to 1,400 K. C. and recheck padders 10, 11 and 12.

MODEL 1427 ARVIN HOME RADIO

Adjustment of the Mid-Band Padders

1. Substitute for the 200 mmf. dummy antenna one having 800 ohms output impedance.
2. Set band switch on mid-band position. Rotate dial pointer to 4.5 megacycles. Adjust padder No. 14 to resonance. Adjust padders 15 and 16 for maximum output.

Adjustment of 4.75-7.5 M. C. Band Padders

(Dial Scale Printed in Black)

1. Set band switch indicator to short wave position indicated by the words "Short Wave" printed in black. Rotate dial pointer to 7.25 megacycles and adjust padder No. 17 to resonance. This may be accomplished by screwing the padder to the extreme clockwise position. Rotate padder screw counter-clockwise, selecting the second resonance point reached.
2. Adjust padders 18 and 19 for maximum output.
3. Rotate dial pointer to 5.0 megacycles. Adjust series padder No. 20 to resonance. It is advisable to then return to 5.0 megacycles and recheck padders No. 17, 18 and 19.

Adjustment of 7.5-12 M. C. Band Padders

(Dial Scale Printed in Red)

1. Set band switch indicator to short wave position indicated by the words "short wave" printed in red. Rotate dial points to 11.5 M. C. and adjust padder No. 21 to resonance. This may be accomplished by screwing the padder to the extreme clockwise position. Rotate padder screw counter-clockwise, selecting the second resonance point reached.
2. Adjust padders No. 22 and 23 for maximum output.

Adjustment of 12.0-18.0 M. C. Band Padders

(Dial Scale Printed in Blue)

1. Set band switch indicator to short wave position indicated by the words "short wave" printed in blue. Rotate dial pointer to 16.0 M. C. and adjust padder No. 24 to resonance. This may be accomplished by screwing the padder to extreme clockwise position. Then rotate padder screw counter clockwise, selecting the second resonance point reached.
2. Adjust padders No. 25 and 26 for maximum output.

Check the Receiver for Sensitivity

After completion of balancing procedure the radio should be checked for sensitivities as follows:

Frequency	*Average sensitivity for Standard Output (1.12 volts across voice coil)*
1,400 K. C.	10 Microvolts
600 K. C.	10 Microvolts
2.0 M. C.	40 Microvolts
4.5 M. C.	20 Microvolts
5.0 M. C.	30 Microvolts
7.25 M. C.	40 Microvolts
8.0 M. C.	30 Microvolts
11.5 M. C.	40 Microvolts
13.0 M. C.	30 Microvolts
16.0 M. C.	40 Microvolts

Average Sensitivities per Stage (1.12 Volts Across Voice Coil)

Point of Input from Signal Generator	*Frequency*	*Input Required to Produce 1.12 Volts Across Voice Coil*
Diode 6H6G	100 K. C.	600,000 Microvolts
6K7G I. F. Grid	100 K. C.	25,000 Microvolts
2nd 6A8G Grid	100 K. C.	1,200 Microvolts
2nd 6A8G Grid	455 K. C.	1,500 Microvolts
1st 6A8G Grid	455 K. C.	100 Microvolts
1st 6A8G Grid	1,000 K. C.	110 Microvolts
R. F. 6K7G Grid	1,000 K. C.	40 Microvolts
Antenna	1,000 K. C.	7 Microvolts

MODELS 1237, 1237D, 1247 ARVIN HOME RADIOS

Adjustment of Short-Wave Band Padders

1. Set band switch on short wave position. Rotate dial pointer to 15 megacycles. Adjust padder No. 17 to resonance. This may be accomplished by screwing the padder condenser to the extreme clock-wise position. Rotate counter clock-wise, selecting the second resonance point reached. This will insure that the oscillator circuit is balanced to the fundamental frequency instead of the image frequency.
2. Adjust padders 18 and 19 for maximum output.

Check the Receiver for Sensitivity

After completion of balancing procedure the radio receiver should be checked for sensitivities as follows:

Frequency	*Average sensitivity for Standard Output (1.12 volts across voice coil)*
1,400 K. C.	20 Microvolts
600 K. C.	10 Microvolts
4.5 M. C.	25 Microvolts
2.0 M. C.	40 Microvolts
14 M. C.	50 Microvolts
6 M. C.	6 Microvolts

** Special Instructions for Model 1237 Arvin Radios with Presto Station Changer*

Arvin radio chassis model 1237 with Presto Station Changer have the broadcast padders located in the coil cans rather than on the under side of the radio chassis as Model 1237-D Push Button chassis. The padders are located as follows: The oscillator padder is the top adjusting screw in the oscillator coil can, located along side the rear section of the tuning condenser. The R. F. padder condenser is located in the top position on the coil can along side the center section of the tuning condenser. The antenna padder condenser is similarly located in the coil can along side the front section of the tuning condenser. The 600 K. C. padding condenser is located in identically the same place as the series padder No. 13 on the 1237-D chassis.

Adjustment of the Mid-Band Padders

1. Substitute for the 200 mmf. dummy antenna one having 800 ohms output impedance.
2. Set band switch on mid-band position. Rotate dial pointer to 4.5 megacycles. Adjust padder No. 14 to resonance. Adjust padders 15 and 16 for maximum output.

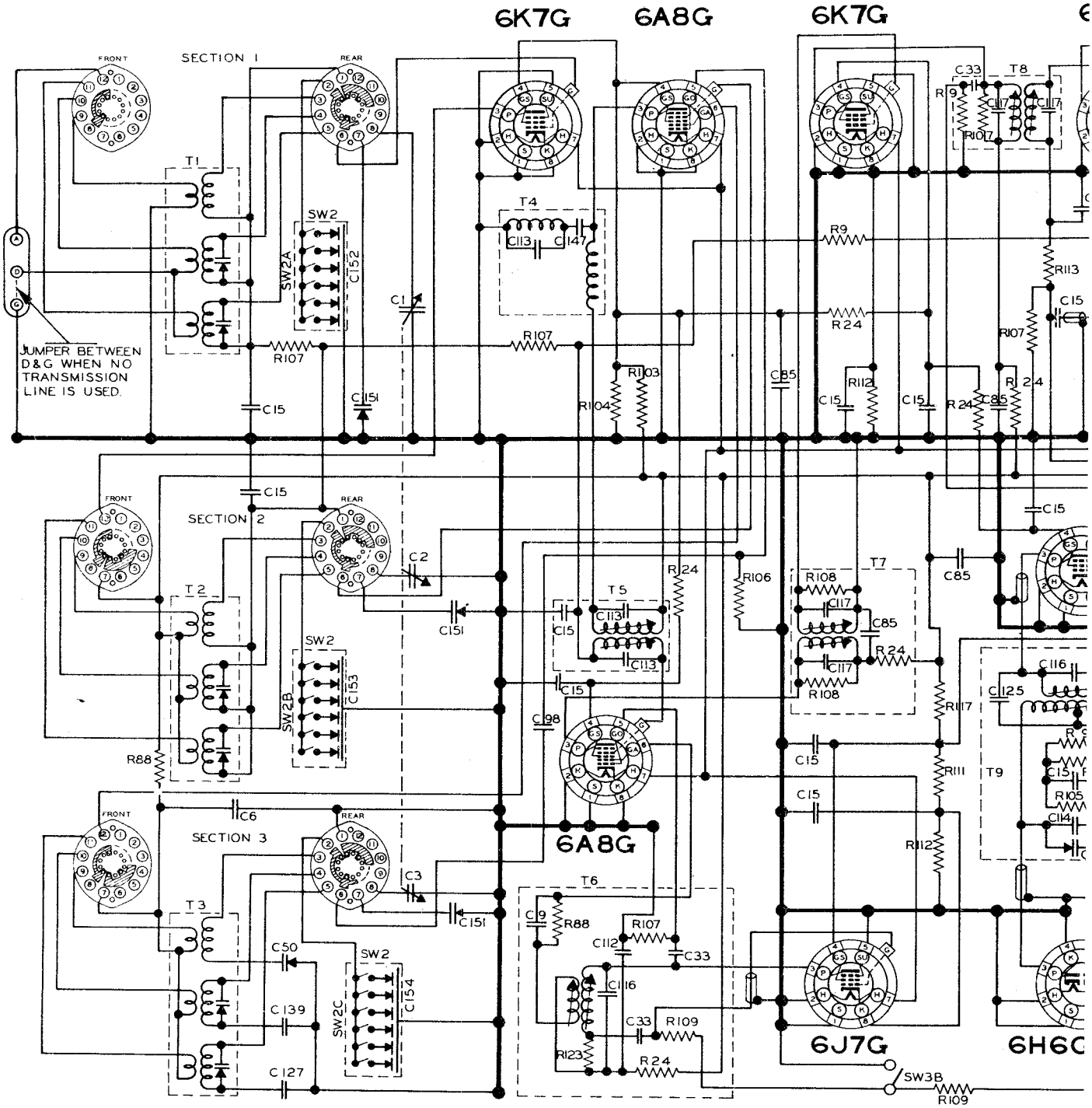

CHASSIS 1237D

ARVIN

HOME RADIO

MODELS 1237, 1237D, 1247, 1247D SOCKET VOLTAGES

Tube	Heater	Plate	Screen	Cathode	Suppressor	§ Grid	Anode Grid	Osc. Grid	Target
6K7G	6.3	250	95	0	0	3.6	.....	.....	.....
6A8G	6.3	250	95	0	.....	3.6	150	—17	.....
6A8G	6.3	250	90	0	.....	3.4	165	— 4	.....
6K7G	6.3	250	90	4.2	0	6.1	.....	.....	.....
6J7G	6.3	250	90	4.5	0	5.5	.....	.....	.....
6K7G	6.3	215	90	0	0	.7	.....	.....	.....
6Q7G	6.3	130	.....	0	.....	.....	.....	.....	.....
6H6G	6.3	.....	.....	‡ .5	.....	.....	.....	.....	.....
6V6G	6.3	245	250	.....	.....	.....	.....	.....	.....
6V6G	6.3	245	250	.....	.....	0	.....	.....	.....
6AB5	6.3	*250	.....	.....	.....	6.8	.....	.....	.....
5U4G	5.0	330		325	.....	.....	.....	.....	250
					.....	.....	.....	.....	.....

* Taken through 1,000,000 Ω resistor.
‡ Measured with a vacuum tube voltmeter.
§ No signal, measured with vacuum tube voltmeter.

MODELS 1237, 1237D, 1247, 1247D

©John F. Rider, Publisher

TRIES, INC.

MODEL 1237D
Schematic.Parts
MODELS 1237,1237D,1247.1247D
Voltage,Coils

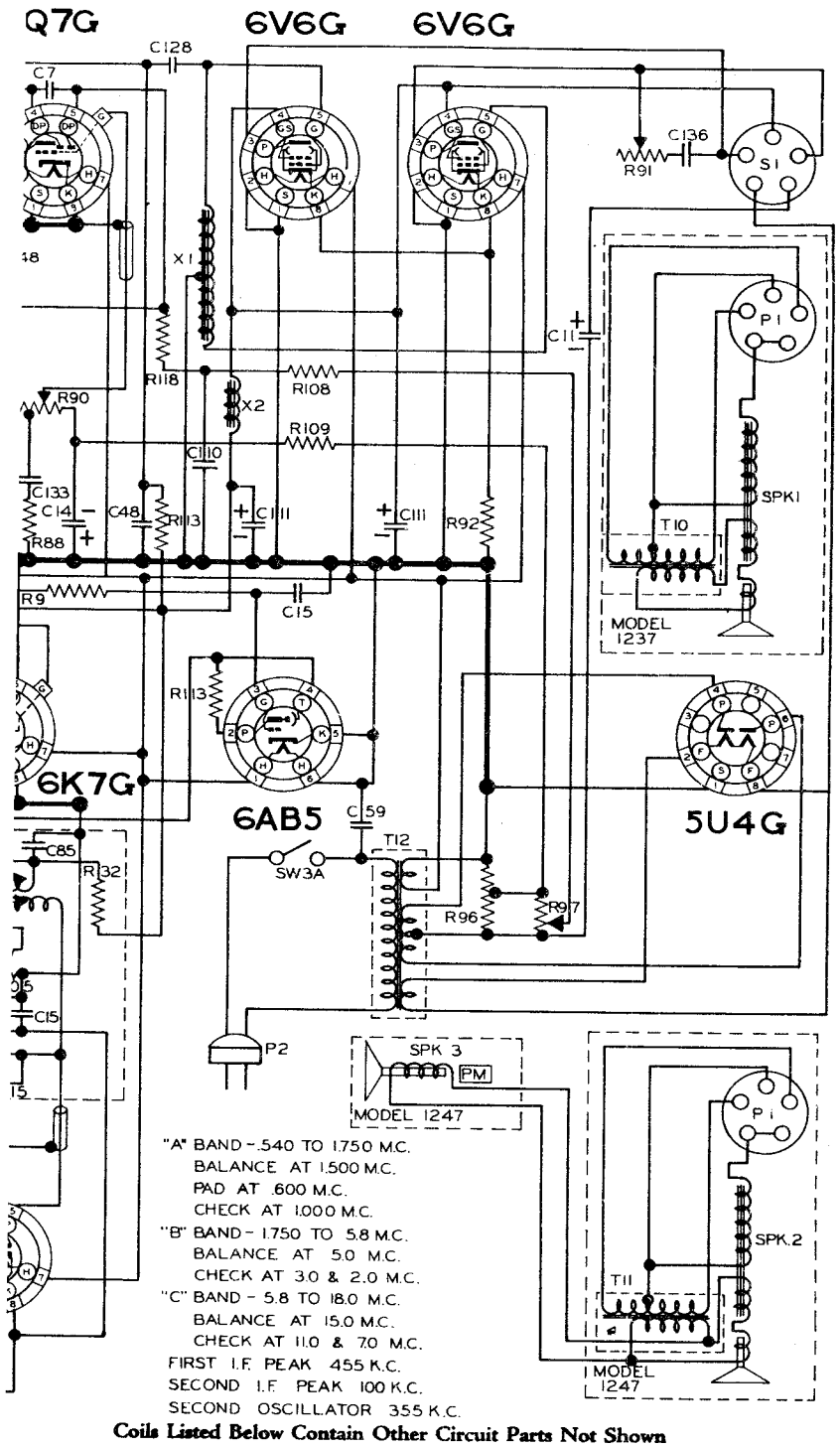

Coils Listed Below Contain Other Circuit Parts Not Shown on Chassis Plan Views.

T4—455 K. C. Band Pass Filter
(Contains the Following Parts)

1113	.0002 mfd. 600 V	17-14143
1147	.0005 mfd. 600 V	17-14215

—455 K. C. I. F. Trans. 00-13779
(Contains the Following Parts)

1113	.0002 mfd. 600 V	17-14143
115	.05 mfd. 200 V	17-14036

—355 K. C. Osc. Coil 00-13782
(Contains the Following Parts)

R24	1.000 Ω ¼ w.	17-2065
R123	100 Ω ¼ w.	17-14188
R109	500,000 Ω ¼ w.	17-14174
C33	.00005 mfd. 600 V	17-14047
C116	.0005 mfd. 600 V	17-14151
C112	.05 mfd. 400 V	17-14139
1-R107	100.000 Ω ¼ w.	17-14172
1-C9	.001 mfd. 600 V	17-4292
1-R88	18.000 Ω ¼ w.	17-14135

T7—100 K. C. Input Trans. 00-13780
(Contains the Following Parts)

2-R108	2.000.000 Ω ¼ w.	17-14173
2-C117	.0004 mfd. 600 V	17-14142
1-C85	.1 mfd. 400 V	17-14101
1-R24	1,000 Ω ¼ w.	17-2065

T8—100 K. C. I. F. Output Trans. 00-13781
(Contains the Following Parts)

2-C117	.0004 mfd. 600 V	17-14142
1-R9	1.000.000 Ω ¼ w.	17-2080
1-R107	100.000 Ω ¼ w.	17-14172

T9—100 K. C. Discriminator Coil 00-13783
(Contains the Following Parts)

1-C115*	.00007 mfd. 600 V	17-14149
1-C114	.0003 mfd. 600 V	17-14148
2-R105	50,000 Ω ¼ w.	17-14169
2-C15	.05 mfd. 200 V.	17-14036
1-R9	1.000.000 Ω ¼ w.	17-2080
1-C85	.1 mfd. 400 V.	17-14101
1-C125	.00001 mfd. 600 V.	17-14166
1-C116	.0005 mfd. 600 V.	17-14151
1-R32	3 000 Ω ¼ w.	17-2090

CONDENSERS

C	CAPACITY	VOLT	PART NO.
1	THREE		17-15720
2	GANG		
3	VARIABLE		
6	.002	600	17-2063
7	.0001	600	17-2064
9	.001	600	17-4292
11	16.	475	17-14002
14	12.	25	17-14005B
15	.05	200	17-14036
33	.00005	600	17-14047
48	.00025	600	17-14207
50	PADDER	600	17-14070
59	.01	400	17-14815
85	.1	400	17-14101
88	.02	600	17-14105
98	.000075	600	17-14122
110	.1	200	17-14137
111	16.	400	17-14138
112	.05	400	17-14139
113	.0002	600	17-14143

C	CAPACITY	VOLT	PART NO.
114	.0003	600	17-14146
115	.00007	600	17-14149
116	.0005	600	17-14151
117	.0004	600	17-14142
125	.00001	600	17-14166
126	.000035	600	17-14167
127	.0032	600	17-14168
128	.03	600	17-14170
129	.001	600	17-4700
130	2-20 MMF	600	17-13926
133	.01	200	17-14193
136	.04	600	17-14196
139	.00155	600	17-14201
147	.0005	600	17-14215
151	15-35 MMF	PADDER	17-14216
152	STRIP OF SIX PADDERS		17-14212
153	STRIP OF SIX PADDERS		17-14213
154	STRIP OF SIX PADDERS		17-14214

RESISTORS

R	OHM	W	PART NO.
9	1M	¼	17-2080
13	75K	¼	17-2067
24	1K	¼	17-2065
32	3K	¼	17-2090
88	18K	¼	17-14135
90	500K	V.C.	17-13795
91	100K	T.C.	17-13796
92	150	2	17-14141
96	35	1	17-14156
97	900	VAR.	17-14157
103	8K	10	17-14164
104	10K	2	17-14165
105	50K	¼	17-14169
106	50 K	½	17-14171
107	100K	¼	17-14172
108	200K	¼	17-14173
109	500K	¼	17-14174
111	20K	½	17-14176
112	500	¼	17-14177
113	250K	¼	17-14178

R	OHM	W	PART NO
117	20K	1	17-14182
118	300K	½	17-14183
123	100	¼	17-14188

CHOKES

X	TYPE	PART NO.
1	AUDIO INPUT	00-13088
2	"B" FILTER	00-13775

TRANSFORMERS

T	TYPE	PART NO.
1	ALLWAVE ANT. COIL	00-15727
2	ALLWAVE R.F. COIL	00-15728
3	ALLWAVE OSC. COIL	00-15729
4	455 K.C. BAND PASS	00-13853
5	455 K.C. I.F. COIL	00-13779
6	355 K.C. OSC. COIL	00-13782
7	100 K.C. I.F. INPUT	00-13780
8	100 K.C. I.F. OUTPUT	00-13781
9	100 KC. DISCRIMINATOR	00-13783
10	OUTPUT TRANS 1237	17-13723
11	OUTPUT TRANS 1247	17-13790
12	POWER TRANS.	00-13774

MISCELLANEOUS UNITS

SYMBOL	DESCRIPTION	PART NO.
SW1	BAND SWITCH ASSEMBLY	17-13552
SW2ABC	PUSH BUTTON SWITCH LESS PADDERS	17-13560
SW2	PUSH BUTTON SWITCH ASSY. WITH PADDERS	29-13551
SW3	AC & AFC "ON-OFF" SWITCH	17-13797
S1	SPEAKER SOCKET	17-4153
P1	SPEAKER PLUG	
P2	PLUG & LINE CORD ASSEMBLY	17-15791
SPK1	DYNAMIC SPEAKER - MODEL 1237	17-13722
SPK 2	DYNAMIC SPEAKER - MODEL 1247	17-13789
SPK3	P.M. DYNAMIC SPEAKER - MODEL 1247	17-13791

MODELS 1237, 1237D, 1247, 1247D

COIL, TRANSFORMER AND SPEAKER RESISTANCES

T1—Antenna Coil

B. C. Primary	19.0 Ω	
B. C. Secondary	3.6 Ω	
Mid-Band Pri.	.6 Ω	
Mid-Band Sec.	.17 Ω	
S. W. Primary	.5 Ω	
S. W. Secondary	.02 Ω	

T2—R. F. Coil

B. C. Primary	2.7 Ω	
B. C. Secondary	3.6 Ω	
Mid-Band Pri.	.4 Ω	
Mid-Band Sec.	.12 Ω	
S. W. Primary	1.0 Ω	
S. W. Secondary	.04 Ω	

T3—Oscillator Coil

B. C. Primary	1.9 Ω	
B. C. Secondary	.4 Ω	
Mid-Band Pri.	.17 Ω	
Mid-Band Sec.	.23 Ω	
S. W. Primary	.05 Ω	
S. W. Secondary	.05 Ω	

T4—455 K. C. Band Pass Filter

Shunt Coil	14.5 Ω	
Plate Coil	100 Ω	

T5—455 K. C. I. F. Trans.

Primary	6.4 Ω	
Secondary	6.4 Ω	

T6—355 K. C. Osc. Coil

Primary	20,000 Ω	
Secondary	1,100 Ω	

T7—100 K. C. 1st I. F. Trans.

Primary	1,000 Ω	
Secondary	31.5 Ω	

T8—100 K. C. 2nd I. F. Trans.

Primary	31.5 Ω	
Secondary	31.5 Ω	

T9—100 K. C. Discriminator Coil

Primary	3,000 Ω	
Secondary (Tapped)	36.5 Ω	

T10—Output Transformer

1237 Primary	340-0-310 Ω	
Secondary	15 Ω	
1247 Primary	340-0-310 Ω	
Secondary	09 Ω	

T11—Power Transformer

110 Volt Primary	2.7 Ω	
Hi-Volt Secondary	70-0-70 Ω	
5 Volt Secondary	.04 Ω	
6 Volt Secondary	.04 Ω	

X-1 Audio Input Choke 2,300-0-2,700 Ω

X-2 B Filter Choke 300 Ω

SPK-1 Speaker Field 350 Ω

Speaker Voice Coil 3 Ω

NOBLITT-SPARKS INDUSTRIES, INC.

MODELS 1237D,1247D
Top Chassis View
MODELS 1237,1237D,1247
1247D
Chassis Layout-Bottom

Model 1237D -- 1247D Chassis

Top View

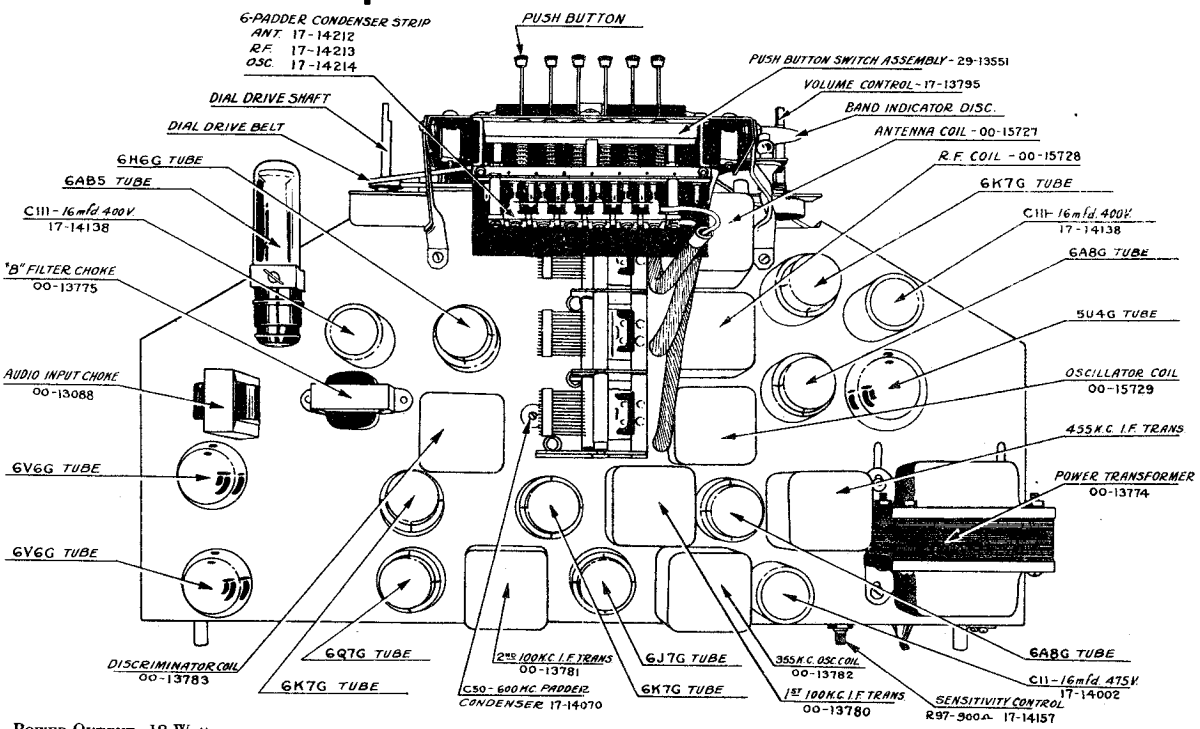

POWER OUTPUT: 18 Watts
VOLTAGE AND FREQUENCY: 105-125 Volts, 60 Cycles
WATTS POWER CONSUMPTION: 175 Watts

1237 - 1237D - 1247 - 1247D

FREQUENCY RANGE:
540—1,750 Kilocycles
1,750—5,500 Kilocycles
5.5— 18.0 Megacycles

Bottom View

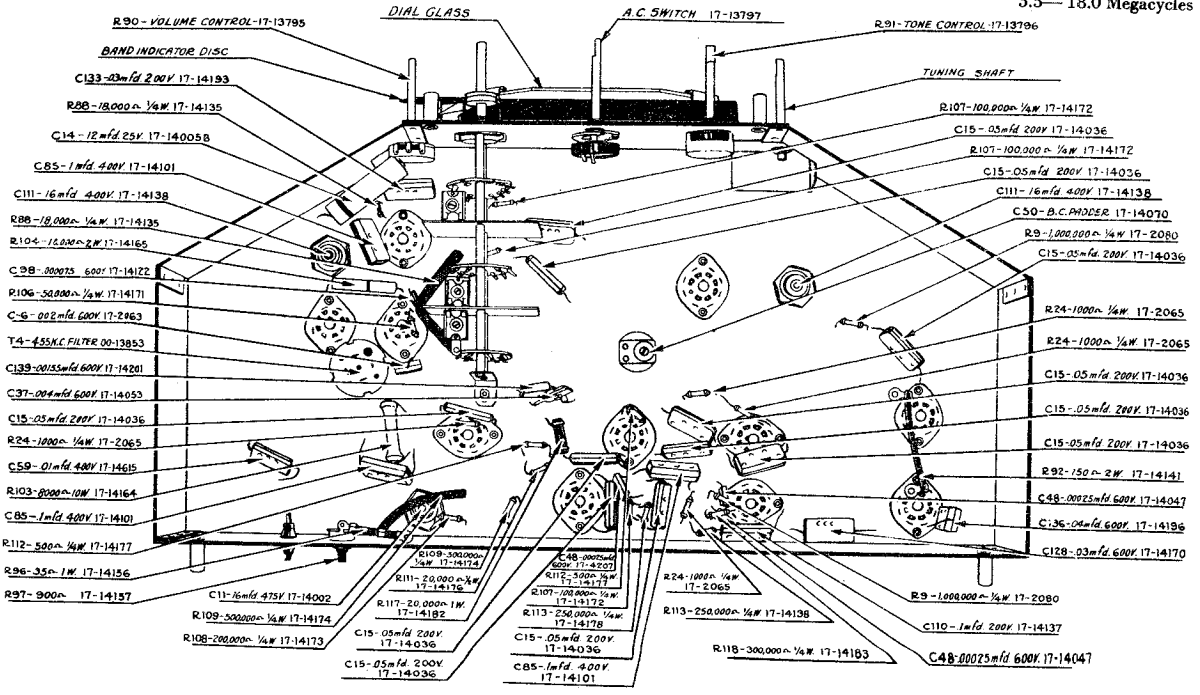

©John F. Rider, Publisher

MODELS 1237,1237D
1247,1247D
Trimmers

NOBLITT-SPARKS INDUSTRIES, INC.

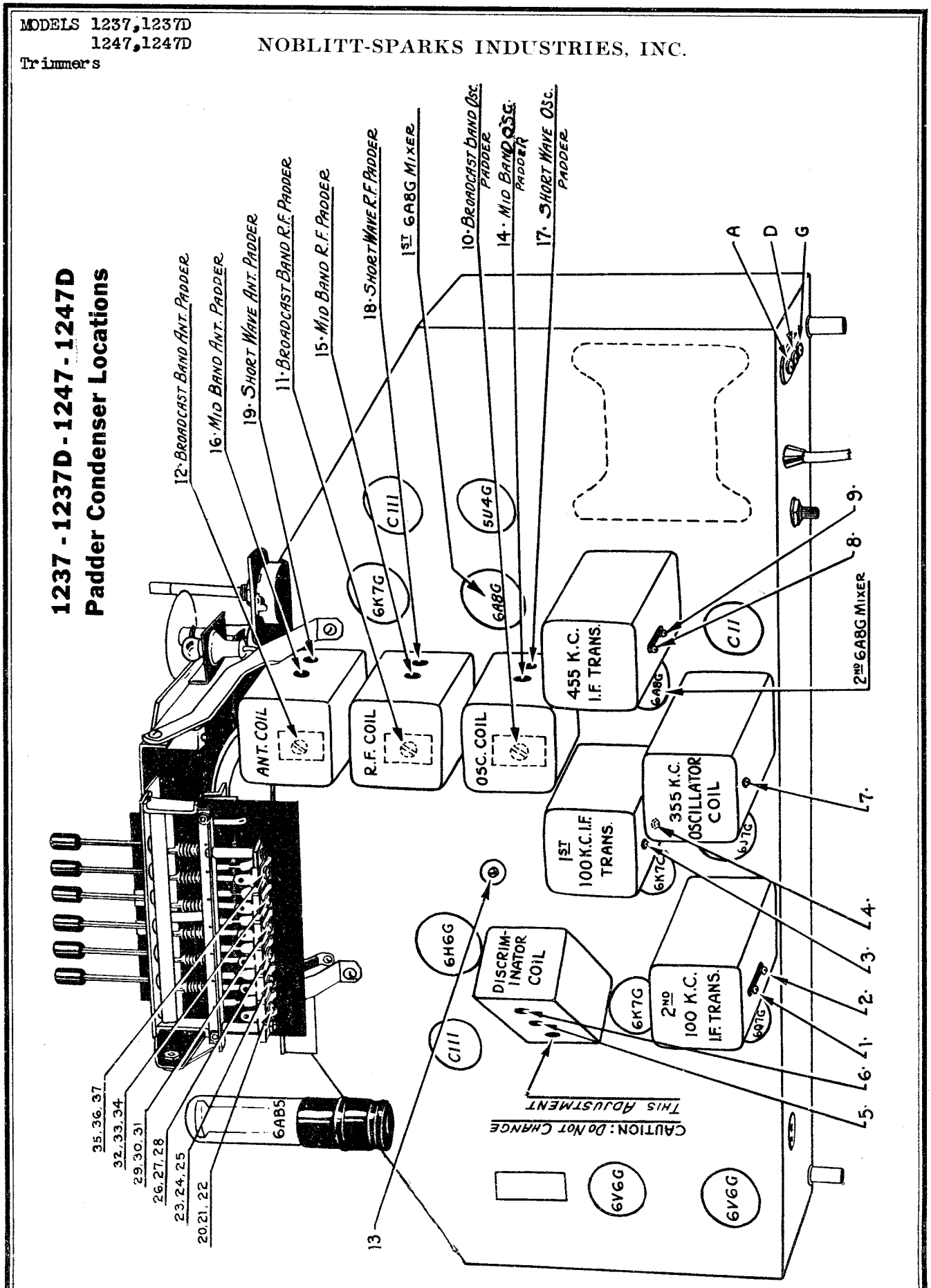

©John F. Rider, Publisher

OLDSMOBILE MOTOR CAR CO.

MODEL 982043 Early
Schematic, Voltage
Notes

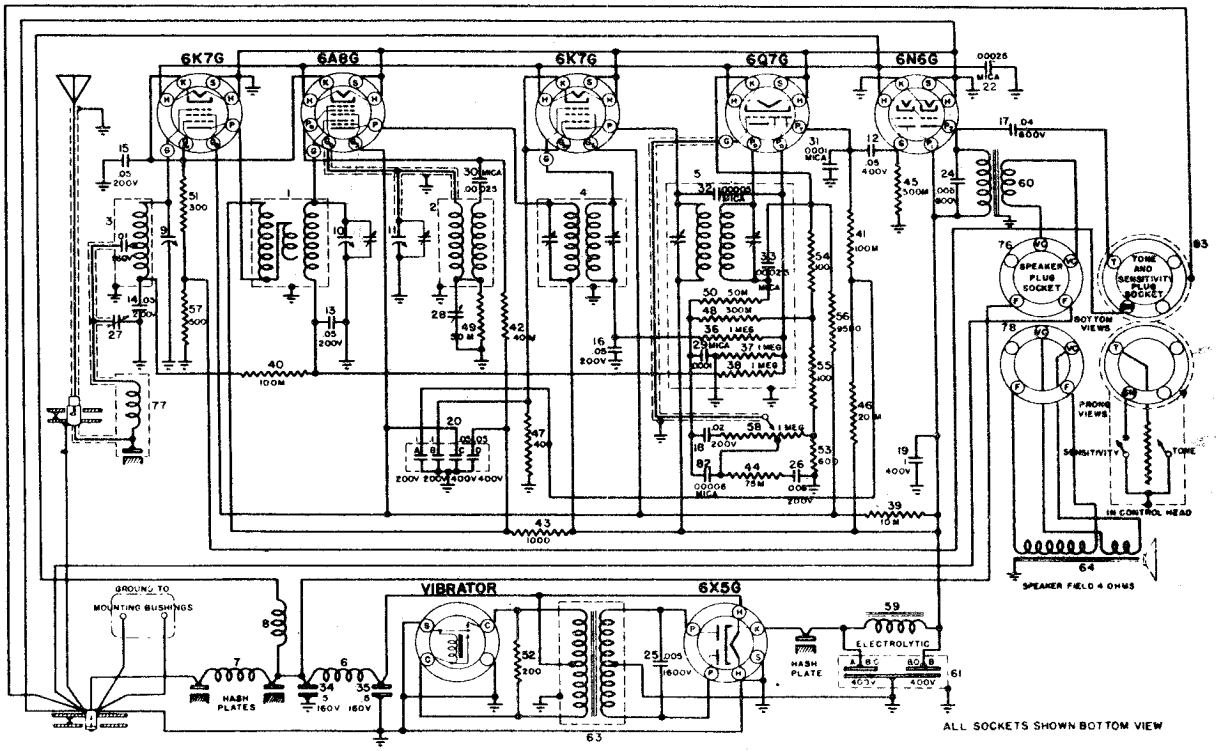

IF PEAK 262 KC.

Date: 11-1-36

FIG. 4 OLDS MODEL 982043 CIRCUIT DIAGRAM
BELOW SERIAL NO. A-20,000

TUBE SOCKET VOLTAGES

TYPE	FUNCTION	H	P	S	Gs	G1	G2	K	G
6K7G	R.F. Amplifier	5.95	236	87	3.9	-	-	3.9	0
6A8G	Translator	5.95	244	87	-	-	-	3.9	0
....	Oscillator	5.95	120	-	-	-18	+120	-	-
6K7G	1.F. Amplifier	5.95	244	87	3.9	-	-	2.5	-
6Q7G	Det. A.V.C. 1st A.F.	5.95	130	-	-	-	-	7.4	5.7
6N6G	Output	5.95	255	244	-	-	-	-	-
6X5G	Rectifier	5.95	-	-	-	-	-	254	-

Total ampere drain at 6 volts is 7.9

FOR	CONNECT TERMINALS TOGETHER
DISTANCE	1 & 4
LOCAL	1 & 3
TONE CONTROL	1 & 2

*1 IS GROUND

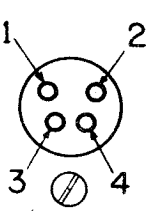

(FIGURE 1) LOCAL DISTANCE SWITCH CONNECTION

No. 1 - Connects to cable shielding.
No. 2 - Connects to blue wire (tone control)
No. 3 - Connects to yellow wire (local)
No. 4 - Connects to red wire (distance)

NOTE: When peaking 1F. transformers without tone control cable plug, short No. 1 and No. 4.

©John F. Rider, Publisher

MODEL 982043 Early

Socket, Trimmers Chassis

OLDSMOBILE MOTOR CAR CO.

Voltage (Field Change)

In order to reduce the battery drain on Model 982043, the rectifier tube 6X5G has been changed to an 0Z4G rectifier tube. This change may be made in the field by adding the following items:

1 - Choke Coil, Part No. 7232229. 1 - .01 400 V. Condenser, Part No. 1209309. Shield for the 0Z4G rectifier tube, Part No. 7231884.

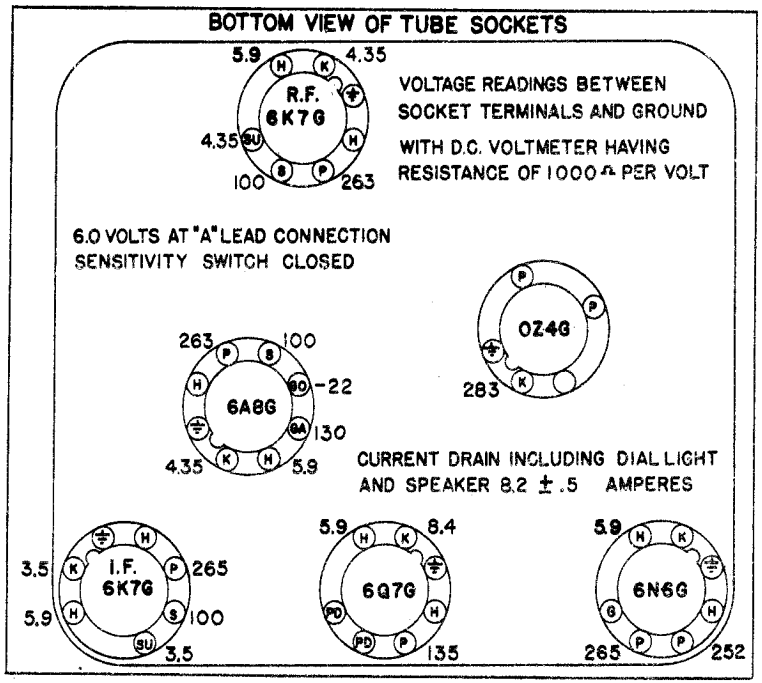

Olds Model 982043
Date: 5-15-37

Model 982043 Under Serial No. A-20,000

VOLTAGES WHEN 0Z4G TUBE IS CHANGED IN THE FIELD.
Readings taken from tube socket contacts to ground with a D.C. Volt-meter having a resistance of 1000 OHMS per volts.

1. The connection between the K. of the 6X5G tube and the electrolytic condenser is broken and the choke coil is placed between the K. of this tube and the electrolytic condenser. The .01 condenser is placed between the K. of this same tube and ground. The small tube shield is placed over the 0Z4G rectifier tube.

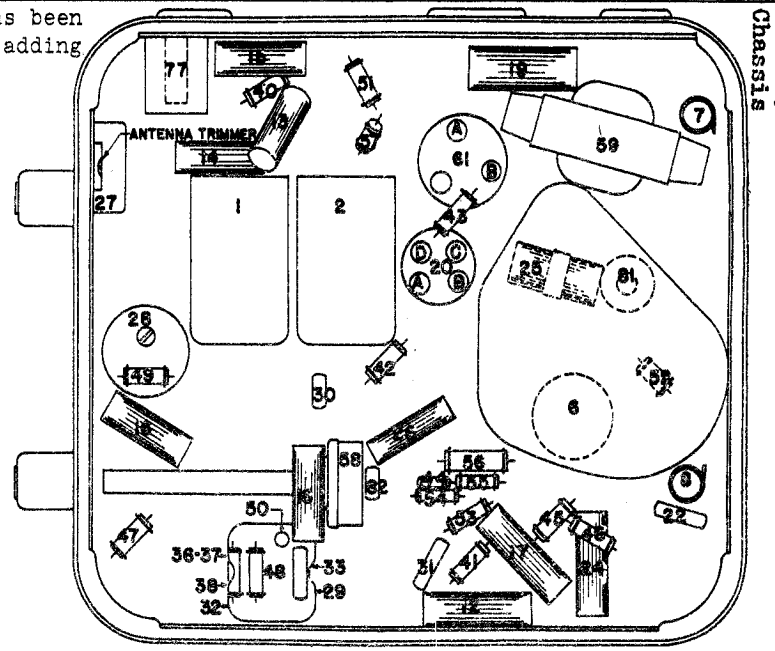

FIG. 3 PARTS LAYOUT--Bottom View

Olds Model 982043
Date: 11-1-36

BELOW SERIAL NO. A-20,000

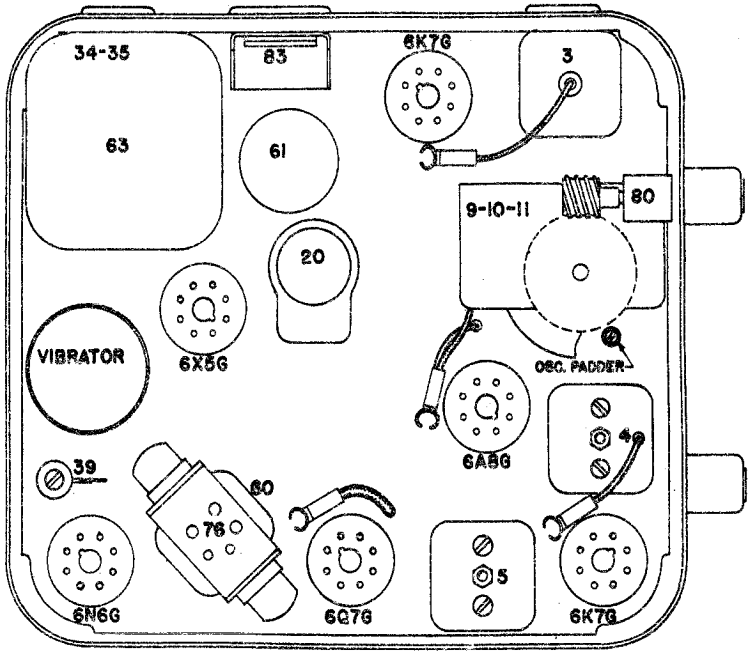

FIG. 2 PARTS LAYOUT--Top View

©John F. Rider, Publisher

OLDSMOBILE MOTOR CAR CO.

MODEL 982043 Late
Above Ser. A-20,000
Schematic, Socket
Voltage, Chassis

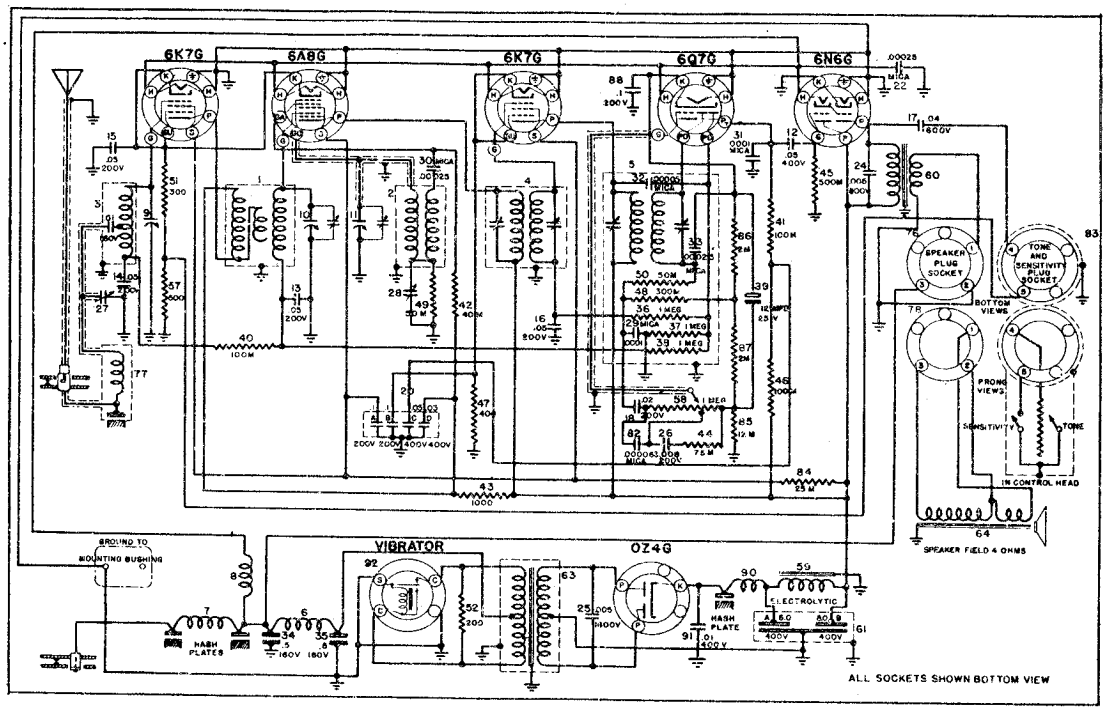

Fig. (1) Olds Model 982043 Circuit Diagram
Beginning with Serial No. A-20,000

IF PEAK 262 KC.

Date: 5-13-37

using an 0Z4G Rectifier Tube in place of the 6X5G Rectifier Tube.

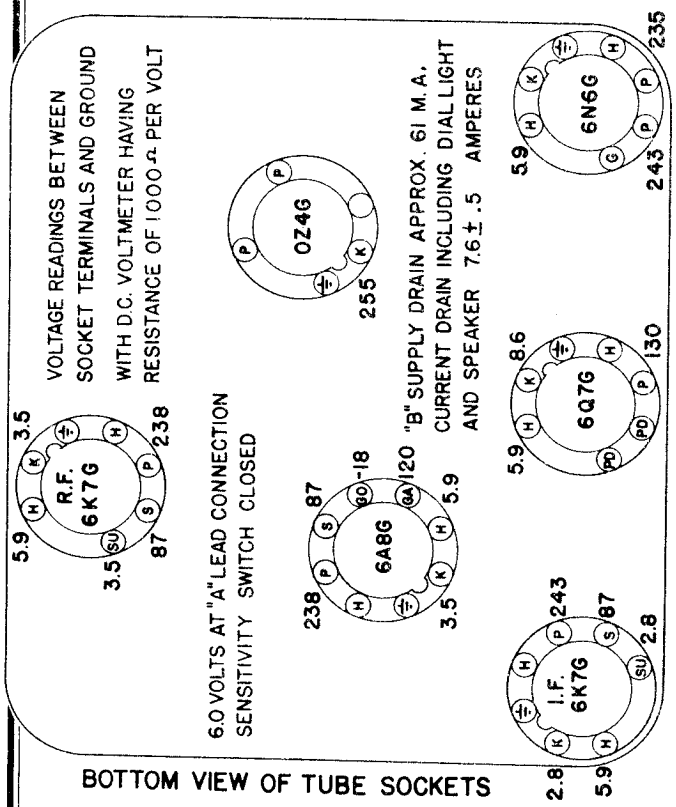

Fig. (2) Olds Model 982043 Socket Voltage

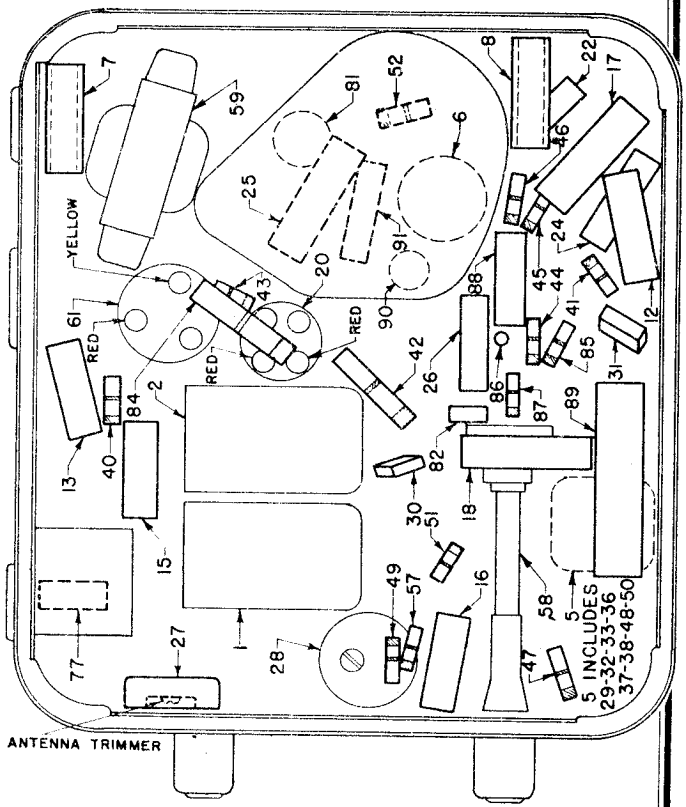

Fig. (3) Olds Model 982043 Parts Layout

©John F. Rider, Publisher

MODEL 982043, Early, Late
Alignment
Parts

OLDSMOBILE MOTOR CAR CO.

Antenna Circuit

The antenna circuit is directly coupled to the antenna in contrast with the capacity coupled circuit used in some previous Oldsmobile models. A small adjustable condenser is provided for adjusting the antenna circuit to the antenna. This adjustment is made near the high frequency end of the band (1400 K.C.) instead of at the low frequency end as with the capacity coupled sets.

Sensitivity Control

A "Local-Distance" switch is provided on the tuning control used with this receiver. In the "Distance" position, the receiver has its maximum sensitivity. In the "Local" position, the receiver functions with reduced sensitivity. The circuit is so designed so that when the sensitivity switch is either in the "Local" or "Distance" positions, the receiver operates with the same high selectivity.

All of the adjustable condensers in this receiver are very accurately adjusted at the factory and should need no further adjustment (excepting antenna condenser). If realignment is found to be necessary, the circuits can be properly adjusted only with the use of a calibrated test oscillator or signal generator and an output meter.

DO NOT ATTEMPT TO PEAK THE I-F STAGES OF THIS RECEIVER WITHOUT CAREFULLY NOTING THE FOLLOWING INSTRUCTIONS:

Connecting the Output Meter

Connect one terminal of the output meter to the plate of the 6N6G output tube. Insert in series with this lead a .1 mfd. or larger, 600 volt condenser. Connect the other terminal of the output meter to the chassis frame. The purpose of the series condenser is to protect the meter from damage.

1. Peaking the I.F. stages at 262 Kilocycles

Before any attempt is made to peak the receiver, the "sensitivity" control must be in the "Distance" position.

If the control head is not removed from the car, use any convenient method to short the connections of the tone control and sensitivity control receptacle.

Short circuit the connections as shown in Figure 1 with the control plug properly shorted.

(a) Connect the ground lead of the test oscillator to the chassis frame.

Connect a .1 mfd. condenser in series with the other lead and connect this lead to the grid clip of the translator 6A8G tube leaving the grid clip in place.

The .1 mfd. condenser is necessary to prevent the oscillator circuit of the receiver from affecting the I.F. adjustment.

(b) Set the test oscillator on the 262 K.C.

(c) Turn the volume control of the receiver on full.

(d) Peak both I.F. trimmers on the 2nd I.F. coil. This is part 5 in the top view of the receiver, (Figure 2).

(e) Then peak both trimmers on the 1st I.F. coil, part 4 in the drawing, (Figure 2).

(f) In order to insure accurate settings of the I.F. trimmers, the above adjustments should be repeated, using the lowest oscillator output that will give a reasonable deflection of the output meter pointer. Make all adjustments for maximum output.

ALIGNING OSCILLATOR AND R.F. STAGES

(a) Connect the signal lead of the test oscillator to the antenna connector through a .00055 mfd. condenser.

(b) Set the test oscillator at exactly 1560 K.C.

(c) Turn the gang condenser completely out of mesh.

(d) Adjust the oscillator trimmer for maximum output. (Center section of the gang condenser).

(e) Set the test oscillator at 1400 K.C.

(f) Tune the gang condenser for maximum output.

(g) Adjust the R.F. trimmer for maximum output. (Top section)

(h) Adjust the antenna compensating condenser for maximum output. (Part 27 in Figure 3.)

(i) Set the test oscillator at 600 K.C.

(j) Tune the gang condenser for maximum output.

(k) Adjust the oscillator padding condenser (Part 28 in Figure 3) and at the same time rock the gang condenser back and forth through the signal. This operation should be continued until no further increase can be obtained.

(l) Repeat E, F, G, H.

(m) If the oscillator padding condenser was materially out of adjustment, it may be necessary to repeat the entire procedure for accurate adjustment.

Part No.	Part Name	Description	Illus. No.
7230384	Coil	R.F. coil assembly	1
7230407	Coil	Oscillator coil assembly	2
7230803	Coil	Ant. coil assembly	3
7230600	Coil	1st I.F. coil assembly	4
7230375	Coil	2nd I.F. coil assembly	5
7230712	Coil	"A" filter choke	6
7230324	Coil	R.F. motor noise choke	7
7230325	Coil	R.F. motor noise choke	8
7230744	Condenser	Variable gang condenser	9,10,11
1209313	Condenser	Tubular .05 400 V.	12
1210697	Condenser	Tubular .05 200 V.	13,14,15,16
7230910	Condenser	Tubular .04 600 V.	17
1209307	Condenser	Tubular .02 200 V.	18
1207908	Condenser	Tubular .1 400 V.	19
7230276	Condenser	By-pass block	20
.....	Sec. A	.1 200 V.	
.....	Sec. B	.1 200 V.	
.....	Sec. C	.05 400 V.	
.....	Sec. D	.05 400 V.	
7230911	Condenser	Tubular .005 800 V.	24
7230590	Condenser	.005 1600 V.	25
7230912	Condenser	.008 200 V.	26
7230247	Condenser	Ant. trimmer	27
7230314	Condenser	Oscillator padder	28
1209055	Condenser	Moulded .00025	22,30
1210275	Condenser	Moulded .0001	31
1207625	Condenser	Moulded .00005 (incl. in 2nd I.F assembly)	32
1209055	Condenser	Moulded .00025 (incl. in 2nd I.F assembly)	33
1210275	Condenser	Moulded .0001	29
7230249	Condenser	Hash condenser .5 160 V.	34
7230250	Condenser	Hash condenser .5 160 V.	35
1209885	Resistor	1 meg. ohms 1/4 watt	36,37,38
7230589	Resistor	Wire wound--10,000 ohms--5 watt	39
1209883	Resistor	100,000 ohms 1/4 watt	40,41
1211106	Resistor	40,000 ohms 1 watt	42
1211026	Resistor	.....1000 ohms 1/2 watt .	43
1210832	Resistor	.....75,000 ohms 1/4 watt	44
1210470	Resistor	.....500 M. 1/4 watt	45
1210882	Resistor	.....20 M. 1/4 watt	46
1211221	Resistor	.....400 1/4 watt	47
1209884	Resistor	.....300 M. 1/4 watt	48
1210116	Resistor	.....50 M. 1/4 watt 49,50	
1211220	Resistor	.....300 ohms 1/4 watt ..	51
1211007	Resistor	.....200 ohms 1/2 watt ..	52
1211222	Resistor	.....600 ohms 1/4 watt ..	53
1211000	Resistor	.....100 ohms 1/4 watt ..54,55	
7230289	Resistor	.....9500 ohms 1 watt ...	56
1211019	Resistor	.....500 ohms 1/4 watt ..	57
7230117	Control volume	.....1 meg.	58
7230267	Choke	....."B" filter choke ...	59
7230804	Transformer	.....Audio output	60
7230264	Condenser	.....Electrolytic	61
.....	Sec. A	.....8.0 mfd. 400 V.	
.....	Sec. B	.....8.0 mfd. 400 V.	
7230228	Transformer	.....Vibrator transformer	63
7230859	Speaker unit only	.....	64
7230757	Grille screen	.....	65
7230843	Ant. filter choke	.....	77
7230283	Socket unmarked	.....	71
7230072	Socket	..... Vibrator	72
7230870	Wrap around--finished	.....	73
7230905	Case cover assembly-chassis	.....	74
7230904	Case cover tube lid	.....	75
7230828	Speaker plug socket	.....	76
5050673	Vibrator	..... Non-synchronous	....

Olds Model 982043 Date: 11-1-36

Beginning with radio, Serial Number 20,000, Olds Model 982043 Date: 5-13-37 the following parts have been removed: Illus. No. 19, 39, 53, 54, 55, 56

Beginning with radio, Serial Number 20,000, the following parts have been added:

Part No.	Part Name	Description	Illus. No.
7231811	Resistor	25,000 2 Watt	84
7231810	Resistor	12,000 1/4 Watt	85
1211224	Resistor	2,000 1/4 Watt	86
1211224	Resistor	2,000 1/4 Watt	87
7231536	Condenser	.1 200 Volt	88
7231815	Condenser	12 MFD. 25 Volt	89
7231741	R.F. Rect. Choke	.....	90
1209309	Condenser	.01 MFD. 400 Volt	91
7231884	0Z4G Tube Shield	.....	..
7231596	0Z4G Tube	Rectifier	..
7232229	R.F. Rect. Choke	(Required when 0Z4G tube is used on first production)	93

©John F. Rider, Publisher

OLDSMOBILE MOTOR CAR CO.

MODEL 982044(3Types)
Schematic, Voltage Changes

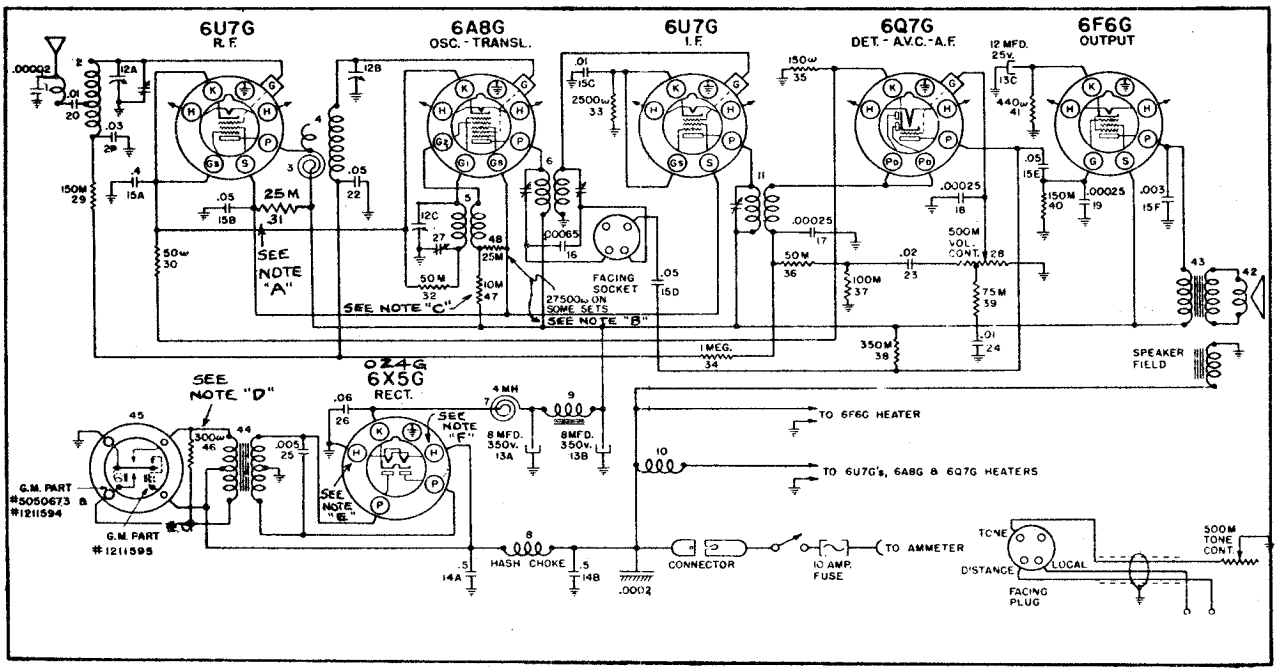

Note A - R31 used only on models dated 11-1-36 and 3-7-38

Note B - R48 used only on model dated 5-13-37

Note C - R47 used only on model dated 5-13-37

Note D - R46 used only on models dated 5-13-37 and 3-7-38

Note E - Heater was grounded on models dated 11-1-36, 5-13-37 and 3-7-38

Note F - Heater was connected to A "Hot" on models 11-1-36, 5-13-37 and 3-7-38

TUBE SOCKET VOLTAGES

Type	Function	H	P	S	Gs	G1	G2	K
6U7G	R-F Amplifier	5.75	230	60	2.5	-	-	2.5
6A8G	Translator	5.75	230	-	60	3.0	60**	2.5
6U7G	I-F Amplifier	5.75	230	60	5.0	-	-	5.0
6Q7G	Det-1st A.F.	5.75	80	-	-	-	-	1.2
6F6G	Output	5.8	220	230	-	-	-	14.0
6X5G	Rectifier	5.75	*	-	-	-	-	240

* AC

"B" supply drain approximately 52 ma.***

Current drain 6.8 amperes

** G2 is 165 volts for model dated 5-13-27
*** "B" supply drain is 62MA for model dated 11-1-36

©John F. Rider, Publisher

MODEL 982044(3 Types)
Socket, Trimmers
Alignment

OLDSMOBILE MOTOR CAR CO.

MODEL 982045(3 Types)
Alignment

GENERAL: The Oldsmobile Model 982044 is a six tube single unit receiver with tone and sensitivity control. This receiver was designed specifically for 1937 Model Oldsmobiles and is equipped with an instrument panel tuning control having a Local-Distance switch and variable tone control in addition to the tuning and volume controls.

FIG. 4 PARTS
LAYOUT UNDER SUB. PANEL 982044

1. **Aligning I-F Stages at 262 Kilocycles** MODELS 982044 and 982045 ALIGNMENT FOR ALL TYPES

IMPORTANT: The "Local-Distance" switch on the tuning control used with this receiver is used to control the alignment of the first I-F coil windings. The capacity existing between the leads and the shielding of the cable connecting to the switch in the tuning control is part of the I-F tuned circuit and must be taken into consideration when aligning the I-F stages.

(a) Connect the signal lead of the signal generator to the grid cap of the 6A8G Translator Tube through a .1 mfd. condenser, leaving the tube's grid clip in place. Connect the ground lead of the signal generator to the chassis frame.

(b) Insert the four prong plug of the tuning control cable into the socket provided on the receiver chassis. Turn switch on tuning control to "DISTANCE" position. (If the receiver is aligned with the switch in the "local" position, the "Local-Distance" switch will operate backwards.)

(c) Connect the output meter from the plate prong of the 6F6G to ground. Care should be taken when connecting the output meter to insert a series condenser to protect the meter from D.C. voltages.

(d) Set the signal generator to exactly 262 K.C.

(e) Adjust the trimmers on the I-F coils for maximum output. These adjustments should be repeated several times.

Checking I-F Band Spread

The Model 165 Cathode Ray Oscillograph should be used to check the I-F band spread after completing the "Alignment Procedure". Slight adjustment of the I-F stages may be found necessary in order to obtain a symmetrical selectivity curve.

2. **Aligning at 1520 Kilocycles**

Leave the signal generator leads connected the same as for aligning the I-F circuits. Turn the rotor plates of the gang condenser all the way out and against the high frequency stop. Set the signal generator to 1520 kilocycles. Adjust the parallel trimmer for the oscillator section of the condenser gang for maximum output. (It is very important that this frequency be set accurately as a slight mis-setting will cause the receiver to be out of track over the entire high frequency end of the dial.)

3. **Aligning at 540 Kilocycles**

Leave signal generator leads connected the same as before. Turn the rotor plates of the gang condenser all the way into mesh so that they rest against the low frequency stop. Set the signal generator to 540 K.C. Adjust the oscillator padding condenser located on the under-side of the receiver sub-panel to maximum output.

4. **Aligning at 1400 Kilocycles**

Remove the signal lead of the signal generator from the grid of the translator tube and connect to the antenna terminal of the receiver THROUGH A .0005 mfd. MICA CONDENSER connected in place of the .1 mfd. condenser previously used. (It is very important that a .0005 mfd. mica condenser be used in aligning the antenna stage of these receivers in order that this circuit can be made to track properly.) Set the signal generator to 1400 K.C. Turn the condenser rotor plates until the frequency is tuned in with maximum output. Adjust the R-F parallel trimmer on the condenser gang and the antenna compensating condenser which is the parallel trimmer on the condenser gang

5. **Aligning at 600 Kilocycles**

The oscillator padding condenser was previously adjusted at 540 K.C. however, it is necessary in most cases to repeak the oscillator tracking condenser at 600 K.C. in order to make the receiver track properly and to secure full sensitivity.

Set the signal generator on 600 K.C. Turn the condenser rotor plates until the signal from the signal generator is tuned in with maximum output. Maintain a low output signal from the signal generator and readjust the oscillator tracking condenser while rocking the variable condenser gang tuning shaft back and forth through the signal. This operation should be continued until no further increase in output can be obtained.

©John F. Rider, Publisher

OLDSMOBILE MOTOR CAR CO.

MODEL 982045(3 Types)
Schematics, Voltage

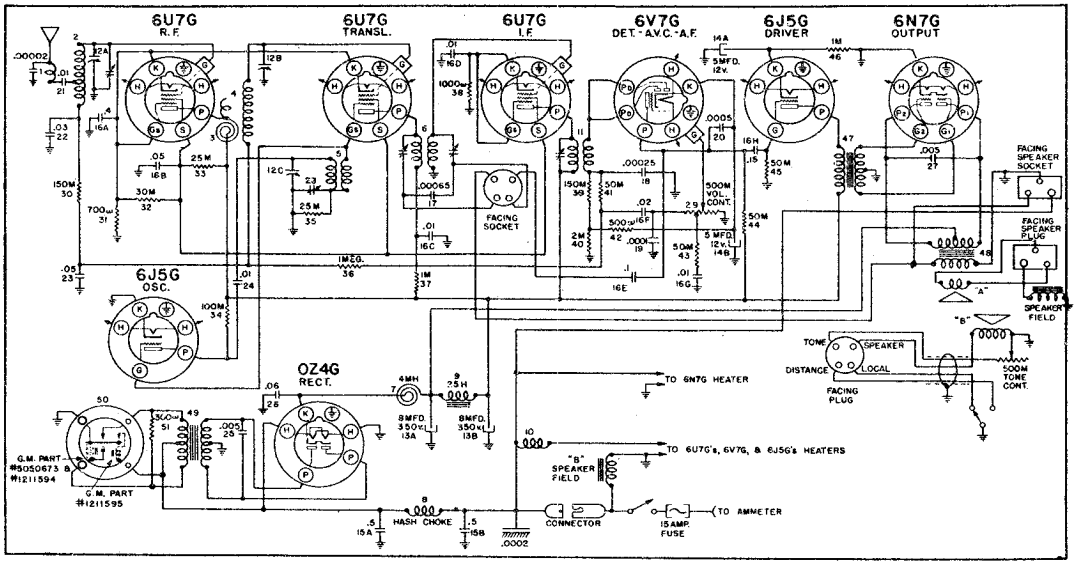

Circuit Diagram Model 982045 (PRODUCTION OF 5-13-37 ONLY)

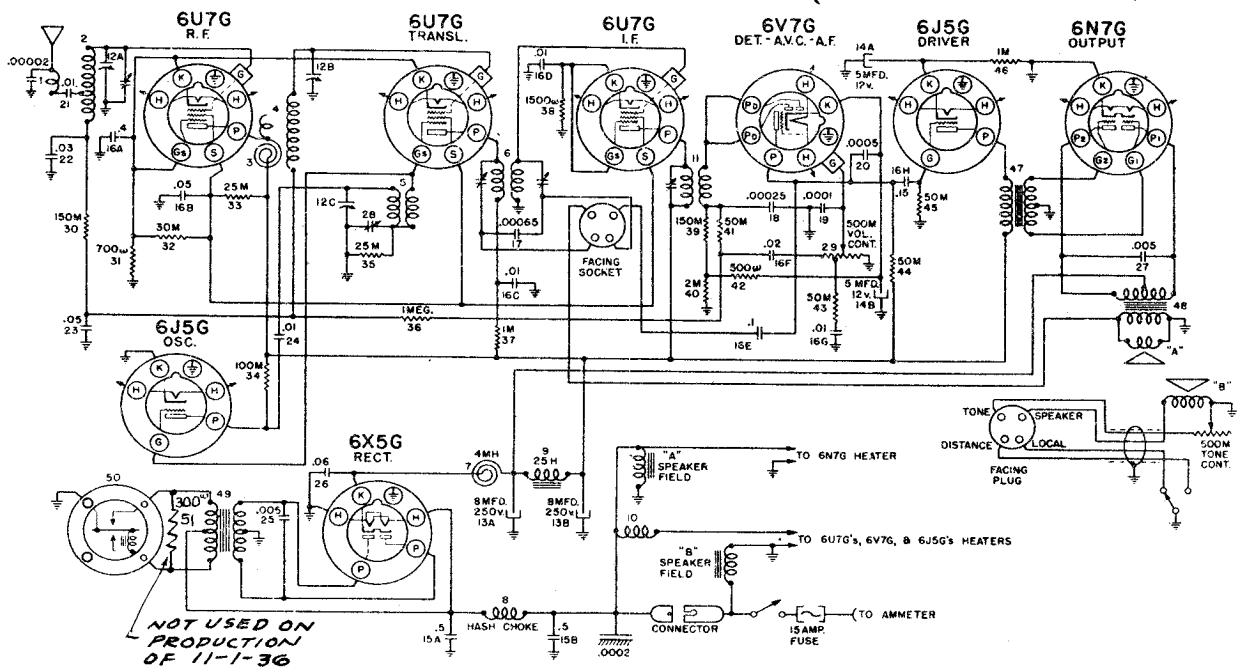

FIG. 3 OLDS MODEL 982045 CIRCUIT DIAGRAM
(PRODUCTIONS DATED 11-1-36 & 3-7-38)

TYPE	FUNCTION	H	P	S	Gs	K
6U7G	R.F. Amplifier	5.75	230	60	8.5	8.5
6U7G	Translator	5.75	230	60	-	8.5
6J5G	Oscillator	5.75	230	-	-10.0	-
6U7G	I-F Amplifier	5.75	230	60	3.6	3.6
6V7G	Det.--1st Audio	5.75	90	-	-	6.0
6J5G	Driver	5.75	230	-	-	7.5
6N7G	Output	5.8 P1P2	230 P1P2	-	-	-
6X5G	Rectifier	-	*	-	-	240

*AC Current 7.8 amperes. "B" supply drain approximately 52 Ma.

Reading taken with a 1000 ohms pervolt, voltmeter. "A" Battery - 6 Volts.

©John F. Rider, Publisher

Date: 7-2-37

TO ELIMINATE HARMONIC TWEETS

COMPLAINT: HIGH PITCHED WHISTLE OCCURRING WHEN TUNING INTO SIDE BAND OF STATION CARRIER AT APPROX. 786 K.C.

It has been found that some of the early deluxe radios, Model 982045, do have an objectional "tweet" although there are a percentage which appear normal.

The remedies below will eliminate this on even the worst offenders.

1. Move the grid lead of the 6U7G R.F. tube away from the 6N7G output tube.
2. The 1 MEG. A.V.C. filter resistance item No. 37 should be removed from the mounting strip in the front of the 2nd 1.F. transformer and mounted near the sub-panel away from the 1.F. transformer, to reduce coupling. (See sketch)
3. Bond the antenna connector metal case to the chassis ground.
4. Install a shield over the grid lead to the 6B7 Tube.
5. Remove the shield from the 6J5G audio Tube.
6. Install a shield over the 6V7G detector tube (use same type shield as used on a 6A8G tube).

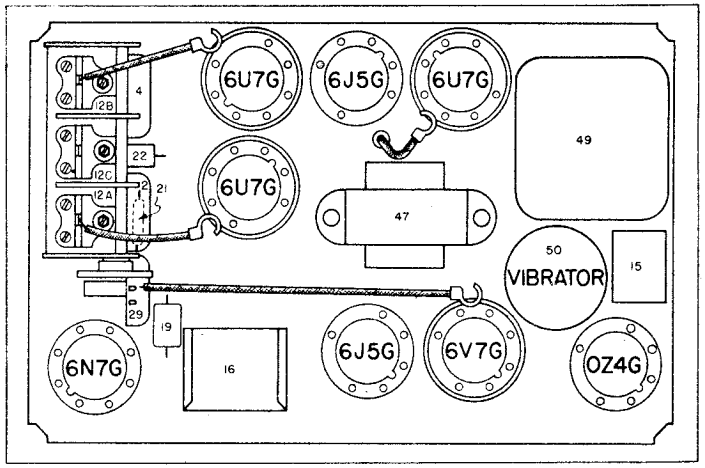

Bottom View Model 982045

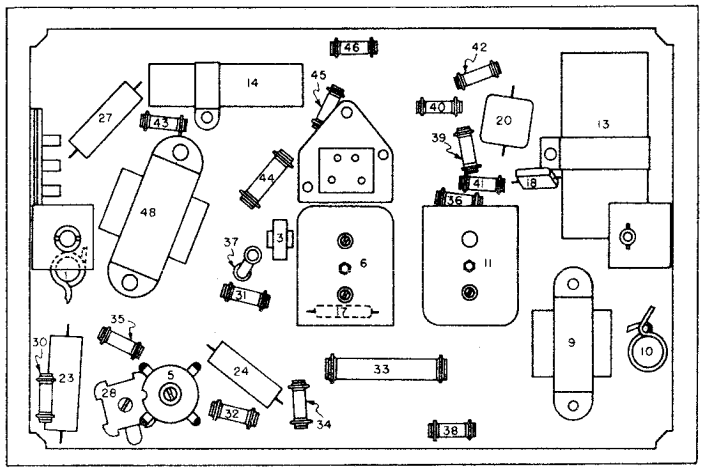

Top View Model 982045

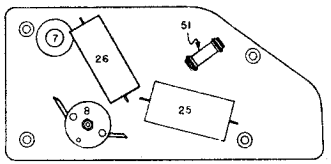

--PARTS LAYOUT--VIBRATOR FILTER

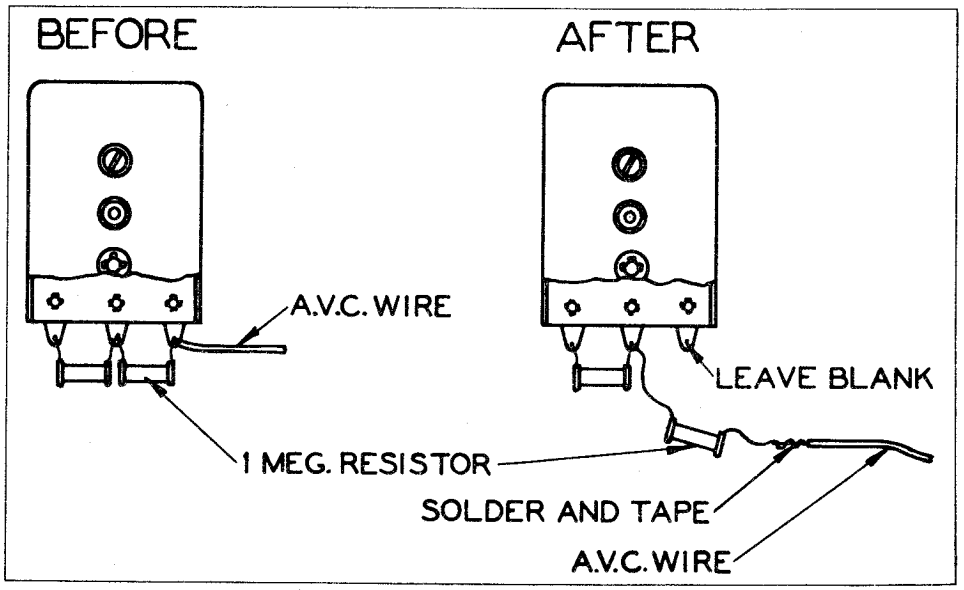

©John F. Rider, Publisher

MODEL 982085, Early, Late
Schematic, Changes

OLDSMOBILE MOTOR CAR CO.

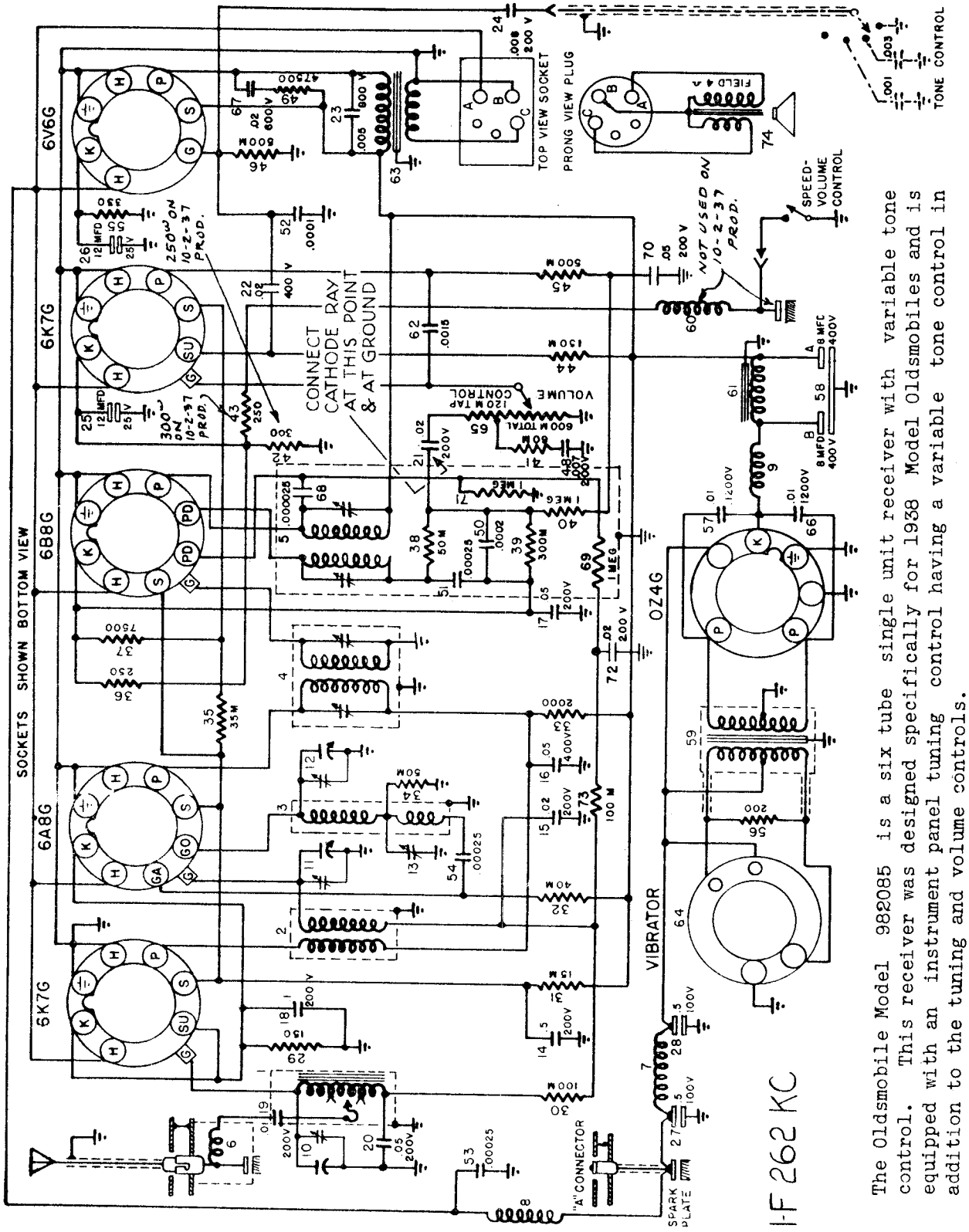

FIG. 2--OLDS MODEL 982085 CIRCUIT DIAGRAM

The Oldsmobile Model 982085 is a six tube single unit receiver with variable tone control. This receiver was designed specifically for 1938 Model Oldsmobiles and is equipped with an instrument panel tuning control having a variable tone control in addition to the tuning and volume controls.

©John F. Rider, Publisher

MODEL 982085,Early,Late
Socket,Trimmers,Notes OLDSMOBILE MOTOR CAR CO.
Chassis Layout

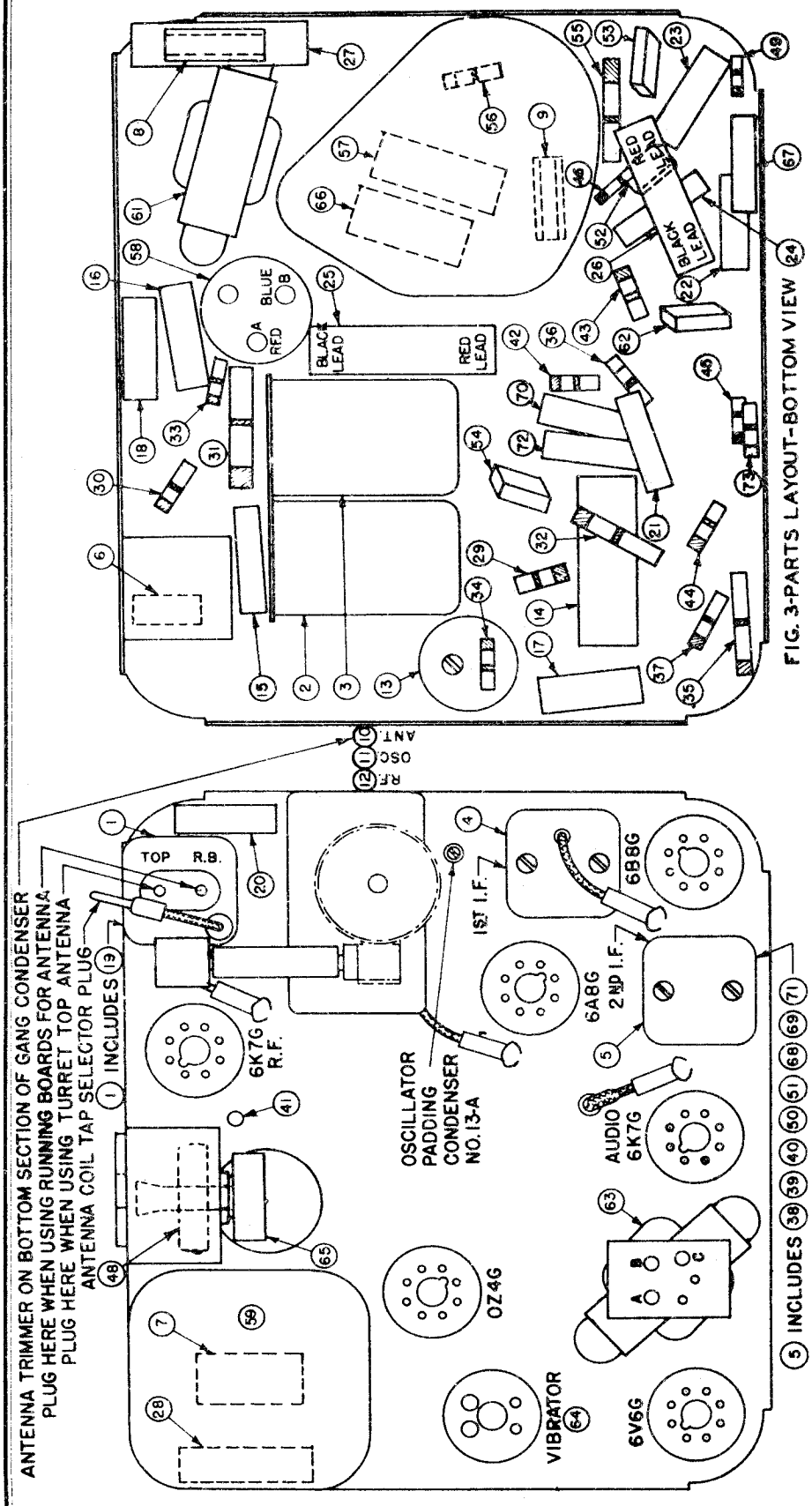

FIG. 2-3 MODEL 982085 - PARTS LAYOUT

The Antenna Circuit is directly coupled to the antenna in contrast with the capacity coupled circuit used in some previous Oldsmobile models. There are two taps provided on the antenna coil, - one for use with the Running Board Antenna and the other for use with Overhead (Roof) Antenna. No adjustment is made to the antenna when used with the Running Board Antennas. When the Overhead (Roof) Antenna is used, the movable lead on the antenna coil should be moved to the other tap provided as indicated, and the antenna circuit should be adjusted to the antenna with the small antenna adjusting condenser provided. This adjustment is made near the high frequency end of the band (1400 K.C.) instead of at the low frequency end, as with the capacity coupled sets.

©John F. Rider, Publisher

All of the adjustable condensers in this receiver are very accurately adjusted at the factory and should need no further adjustment (excepting antenna adjusting condenser when used with the Overhead (Roof) Antenna.) If realignment is found to be necessary, the circuits can be properly adjusted only with the use of a calibrated test oscillator or signal generator and an output meter.

DO NOT ATTEMPT TO PEAK THE I-F STAGES OF THIS RECEIVER WITHOUT CAREFULLY NOTING THE FOLLOWING INSTRUCTIONS:

CONNECTING THE OUTPUT METER

Connect one terminal of the output meter to the plate of the 6V6G output tube. Insert in series with this lead a .1 mfd., or larger, 600 Volt Condenser.

Connect the other terminal of the output meter to the chassis frame. The purpose of the series condenser is to protect the meter from damage.

1. Aligning I-F Stages at 262 Kilocycles:

   a. Connect the signal lead of the test oscillator to the grid cap of the 6A8G tube through a .1 mfd. condenser, leaving the tubes grid clip in place.

   b. Connect the ground lead of the test oscillator to the chassis frame.

   c. Set the test oscillator to exactly 262 K.C.

   d. Turn the volume control of the receiver on full.

   e. Peak both I-F trimmers on the 2nd I-F coil for maximum output. This is Illustration 5 in the top view of the Receiver, (Figure 2).

   f. Then peak both trimmers on the 1st I-F coil (Illustration 4, Figure 2).

   g. In order to insure accurate settings of the I-F trimmers, the above adjustments should be repeated several times and during alignment, the oscillator output should be kept to as low a value as is consistant with obtaining a readable indication on the output meter. Make all adjustments for maximum output.

2. Aligning at 1560 K.C.:

   a. To align the oscillator and R-F stages, connect the oscillator signal lead to the antenna connector through a .00055 mfd. condenser, leaving the ground lead of the oscillator connected to the chassis frame.

   b. Set the test oscillator to exactly 1560 K.C.

   c. Turn the rotor plates of the gang condenser all the way out and against the high frequency stop.

   d. Adjust the oscillator trimmer (Illustration 11, Figure 2) (center section of gang condenser) for maximum output.

   e. Set the test oscillator to exactly 1400 K.C.

   f. Turn the rotor plates until the 1400 K.C. frequency from the test oscillator is tuned in with maximum output.

   g. Adjust the R-F trimmer on the condenser gang (Illustration 12, Figure 2) (Top Section) for maximum output.

   h. Adjust the Antenna Compensating Condenser (Illustration 10, Figure 2) (Bottom Section) on the gang condenser for maximum output.

3. Aligning at 600 K.C.:

   a. Set the test oscillator to exactly 600 K.C.

   b. Turn the condenser rotor plates until the 600 K.C. frequency from the test oscillator is tuned in with maximum output.

   c. Adjust the oscillator padding condenser (Illustration 13A, Figure 2) and at the same time rock the gang condenser back and forth through the signal. This operation should be continued until no further increase can be obtained.

   d. Repeat E-F-G-H under "ALIGNING AT 1560 K.C."

   e. If the oscillator padding condenser was materially out of adjustment, it may be necessary to repeat the entire procedure for accurate adjustment.

NOTE: "When the receiver leaves the factory, it is properly adjusted to obtain maximum results from the running board Antenna. No adjustment of any kind is required."

"If a TOP ANTENNA is to be used with this receiver, it is necessary to make two adjustments."

"SELECT PROPER ANTENNA COIL TAP. Remove the front cover of the receiver. In the upper right corner (See Figure 2). is the Antenna coil assembly Illustration No. 1. Two positions for the Tap Selector Plug are provided marked "R.B." and "TOP." Pull out the plug from position "R.B.," and insert in the position marked "TOP." Replace the front cover."

"ADJUST THE TRIMMER CONDENSER IN THE ANTENNA CIRCUIT. This condenser is located on the side of the Variable Gang Condenser and is on the section nearest the back cover (See Figure 5). Remove the Cover Plate on the right hand side of the receiver case to expose this adjusting screw."

"CAUTION - Receiver alignment may be upset if other trimmer screws are disturbed."

"PROCEDURE TO ADJUST ANTENNA TRIMMER CONDENSER. Tune in a BARELY AUDIBLE station between 140 and 150 on the dial with the volume control FULL-ON. With a small screw driver, adjust the Antenna trimmer Illustration No. 10, (See Figure 8) for MAXIMUM VOLUME."

"No further adjustment is necessary unless the Antenna with which the receiver is now tuned is changed."

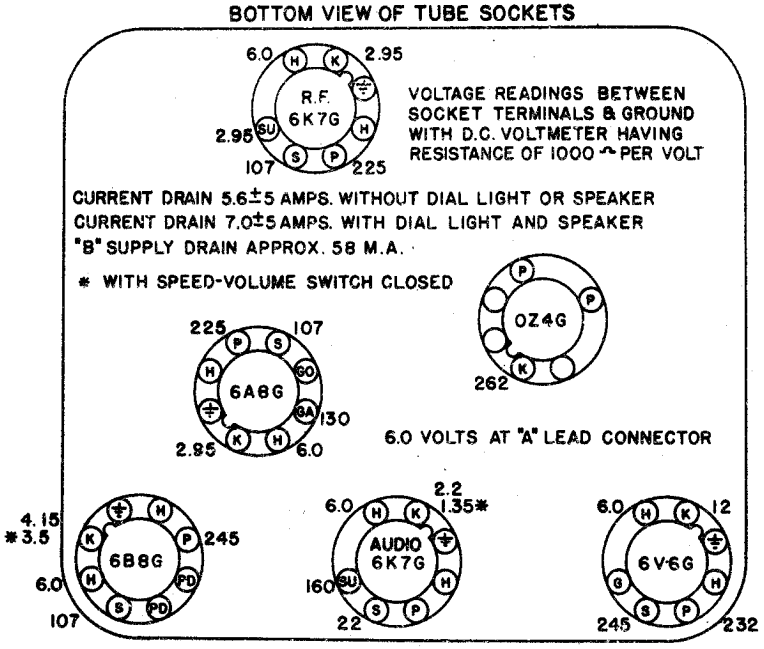

FIG. 4 TUBE PRONG VOLTAGES - MODEL 982085

©John F. Rider, Publisher

MODEL 982085, Early, Late
Data, Parts

OLDSMOBILE MOTOR CAR CO.

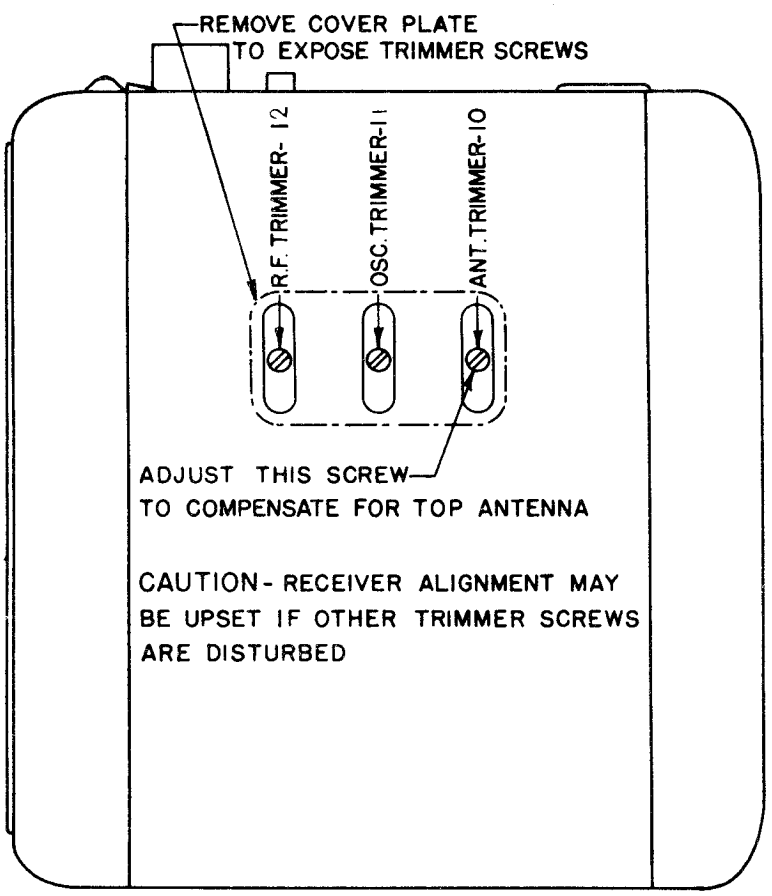

RIGHT SIDE VIEW OF RECEIVER

FIG. 5 GANG CONDENSER (TRIMMER ADJUSTMENT)

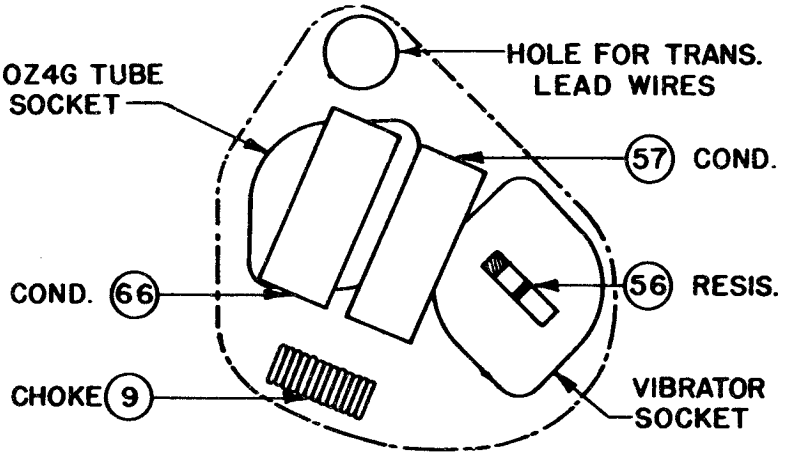

DETAIL OF CHASSIS UNDER "B" SUPPLY SHIELD

FIG. 7 PARTS UNDER SUB. PANEL

TUNING CONTROL PARTS

409976	Control Unit Complete	1212482	Screw 4/36 x 3/16
1212484	Base	107697	Screw 6/32 x 3/8 R.H.
1212387	Cable Assembly Flexible	1212406	Spring
1212388	Cable Assembly Flexible	1212407	Spring
1212392	Clamp	1212418	Stud
1212393	Clip	1212409	Switch
1212394	Clutch and Dial Assy.	1212410	Switch
1212397	Gear and Shaft Assembly	1212413	Washer
1212396	Gear and Shaft	1212414	Washer
1212398	Gear and Shaft	131044	Washer Lock
1212399	Gear and Shaft	1212395	Washer Plain
1212401	Knob	1212415	Washer Plain
1212402	Knob	1212417	Cable and Plug Assembly
1212403	Knob	1212390	Case Control Unit
115275	Lamp No. 51 Miniature Bayonet Base	1212480	Condenser Dual
134530	Nut 6/32	131841	Washer
1212405	Plate		

	Standard
	Control Assembly
	Station Selector
	Volume Control
	Lead
	Shaft Retaining
	Idler Driving and Dial Drive
	Dial Drive (Driving Pinion)
	Off-On and Volume (Driving)
	Off-On and Volume (Driven)
	Station Selector
	Off-On and Volume Control
	Tone Control
	Pilot Light
	Lead Clamp Mounting
	Gear Retaining

	Binder Head
	Lead Clamp Mounting
	Case Retaining
	Dial Tension
	Control Unit Mounting
	Off-On
	Tone Control 4 Positions
	Knob Retaining
	Off-On and Volume Shaft Retaining
	Lead Clamp Mounting
	Pinion Gear and Shaft Mounting
	Dial Drive Bushing Mounting
	Tone Control
	Escutcheon
	Tone Control
	No. 8 Lock

©John F. Rider, Publisher

PACIFIC RADIO CORP.

MODEL 3
MODEL 11
Schematics

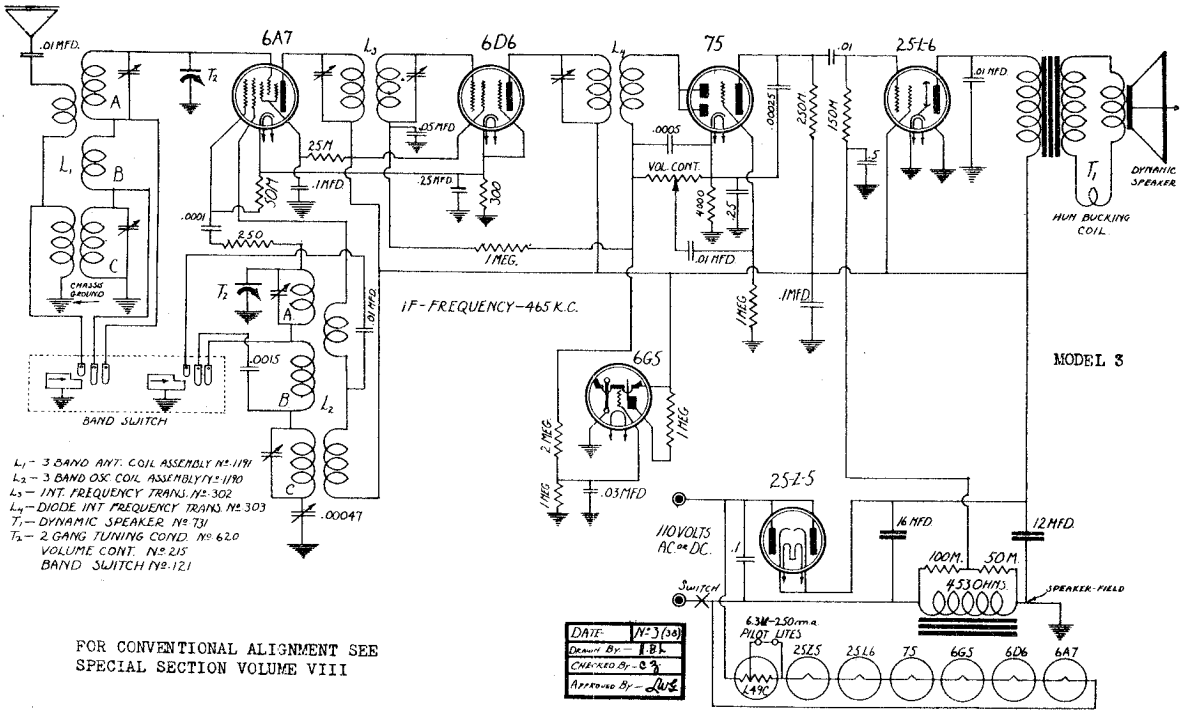

FOR CONVENTIONAL ALIGNMENT SEE
SPECIAL SECTION VOLUME VIII

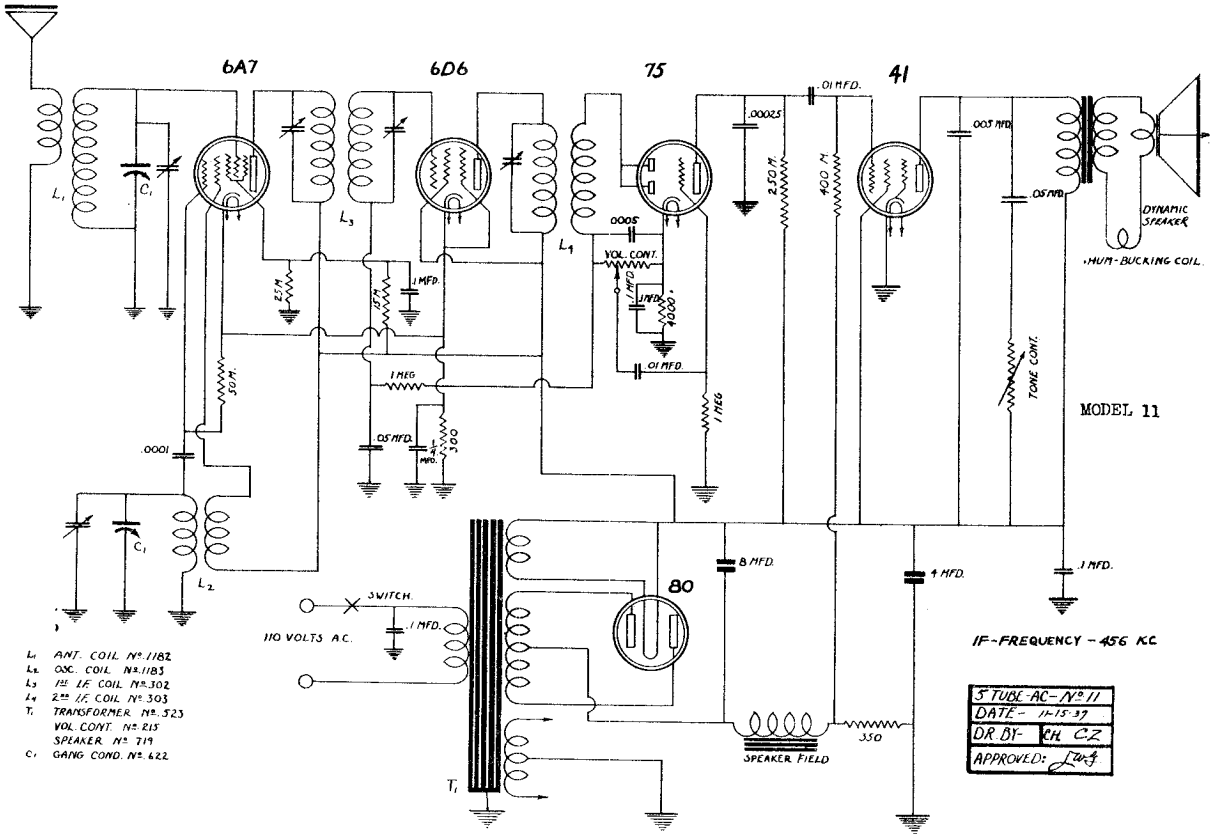

©John F. Rider, Publisher

MODEL 5 SW
Schematic
Alignment

PACIFIC RADIO CORP.

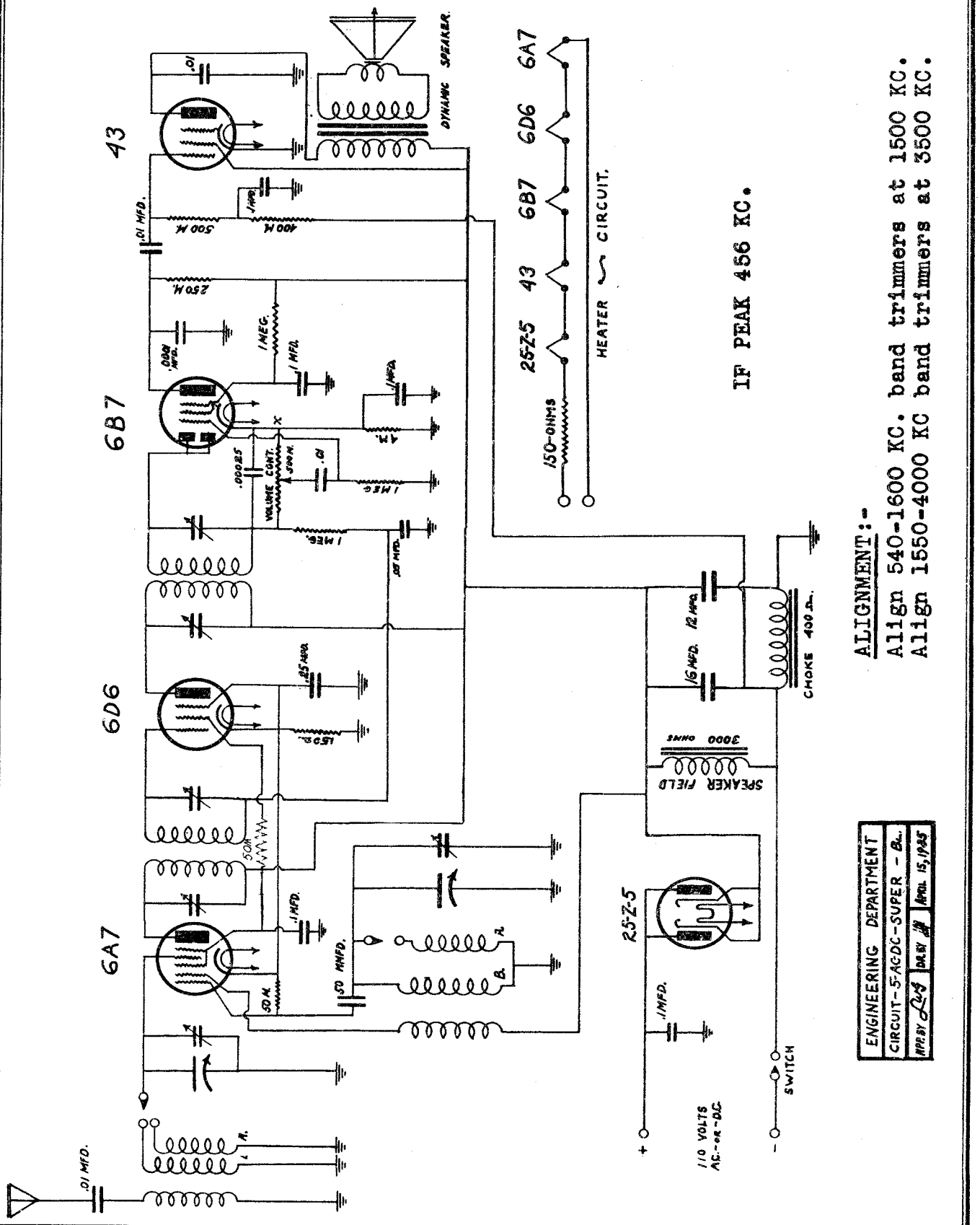

©John F. Rider, Publisher

PACIFIC RADIO CORP.

MODEL M7
MODEL 8T-6V
Schematics

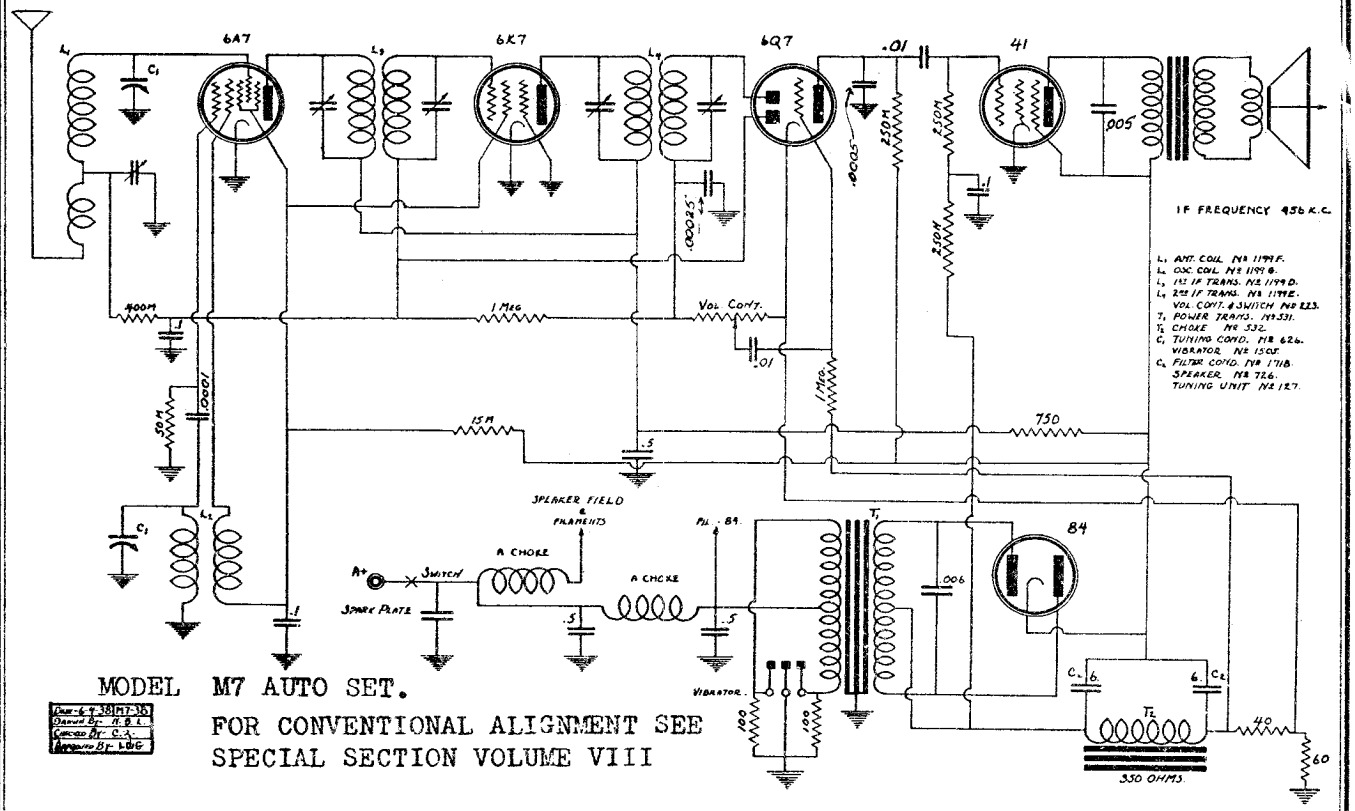

MODEL M7 AUTO SET.

FOR CONVENTIONAL ALIGNMENT SEE SPECIAL SECTION VOLUME VIII

RANGE 540— 1710 KC
1710— 5800 KC
5800—17500 KC

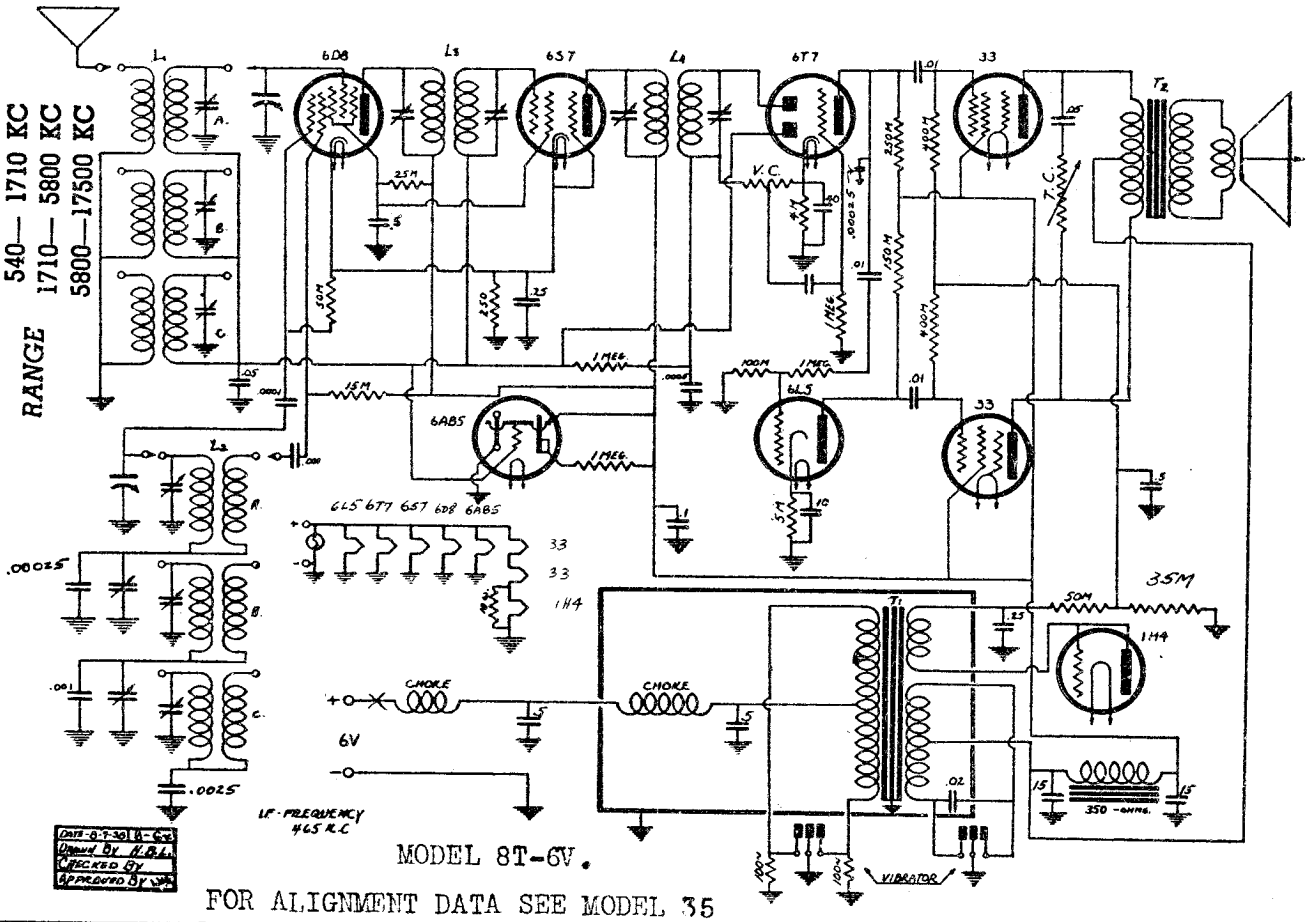

MODEL 8T-6V.

FOR ALIGNMENT DATA SEE MODEL 35

©John F. Rider, Publisher

MODEL Midget Super.
Schematic, Socket Alignment

PACIFIC RADIO CORP.

MODEL 8T-6V
Socket, Trimmers, Parts

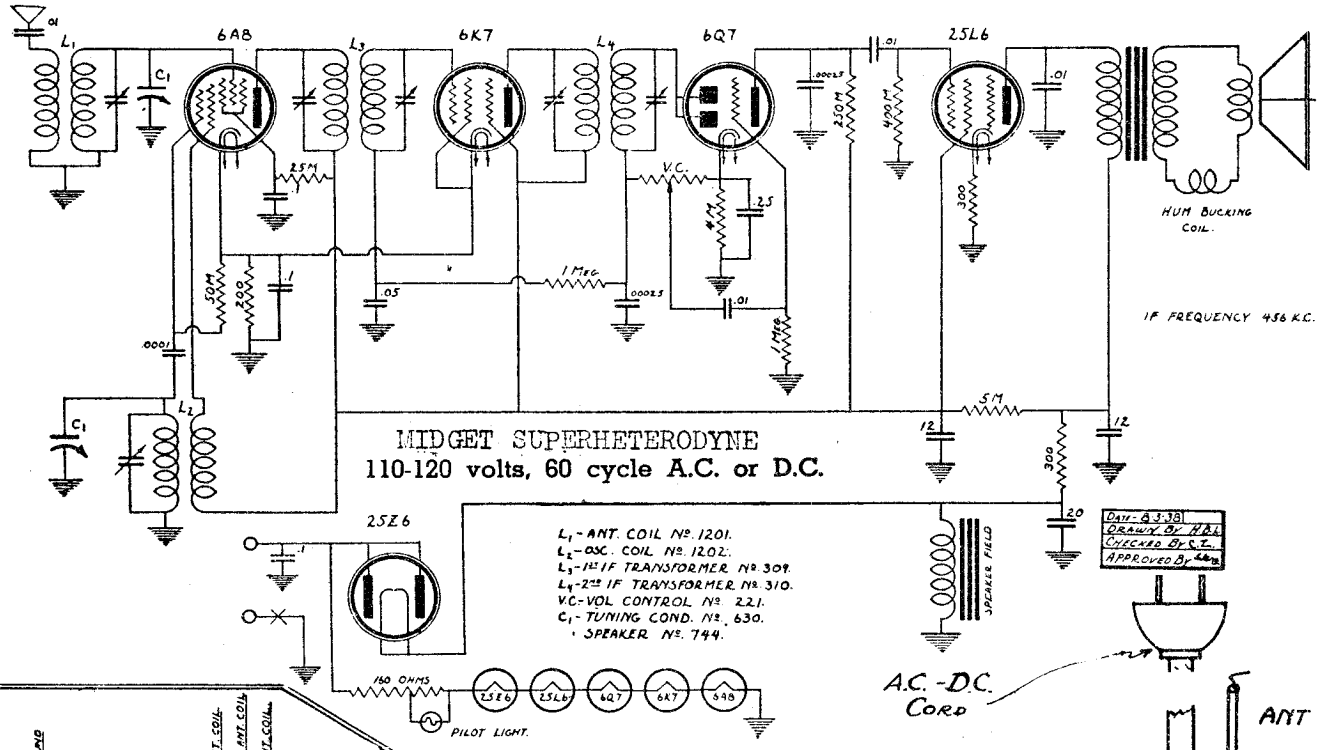

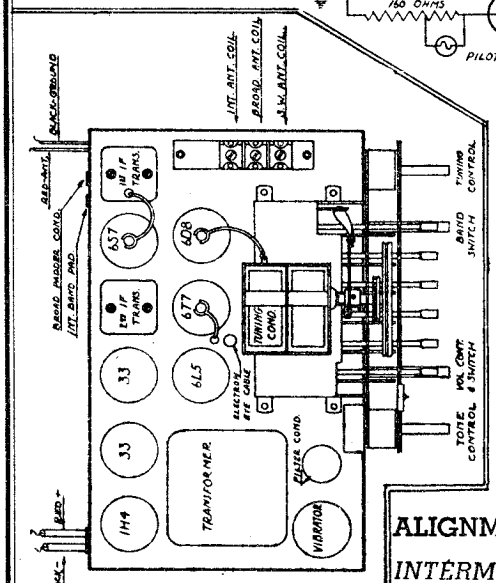

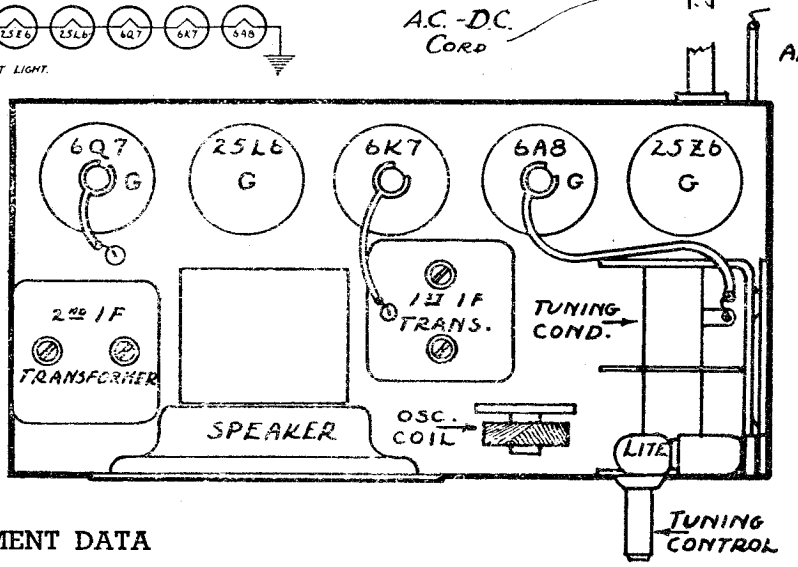

CHASSIS AND PARTS FOR MODEL 8T-6V.

1194	L1—3 Band Antenna Coil
1195	L2—3 Band Oscillator Coil
101T	L3—1st I.F. Transformer
101B	L4—2nd I.F. Transformer
629	Variable Tuning Condenser
536	T1—Vibrator Transformer
535	T2—Output Transformer
722	P.M.—Speaker 6½"
723	P.M.—Speaker 8"
221	Volume Control and Switch
305	Tone Control
123	Band Switch
1506	Vibrator
130	Automatic Tuner

ALIGNMENT DATA

INTERMEDIATE FREQUENCY: Set oscillator to 456 KC. Feed this to the grid of the pentagrid (648) converter tube. Adjust trimmers on the intermediate frequency transformers for peak readings as indicated on the output meter which is to be placed across the output transformer.

BROADCAST BAND: Adjust oscillator to 1400 KC and connect the output of the generator to the antenna connection at the rear of the chassis through a .0002 mfd. mica condenser. Set the pointer on the dial to 1400 KC making sure that the volume control is set at its maximum position. Adjust the antenna and oscillator trimmers for maximum signal (as indicated on the output meter). Re-set the dial pointer on the receiver and on the test oscillator to 600 KC and check for alignment.

©John F. Rider, Publisher

PACIFIC RADIO CORP.

MODELS 21,22
MODEL 23
Schematics

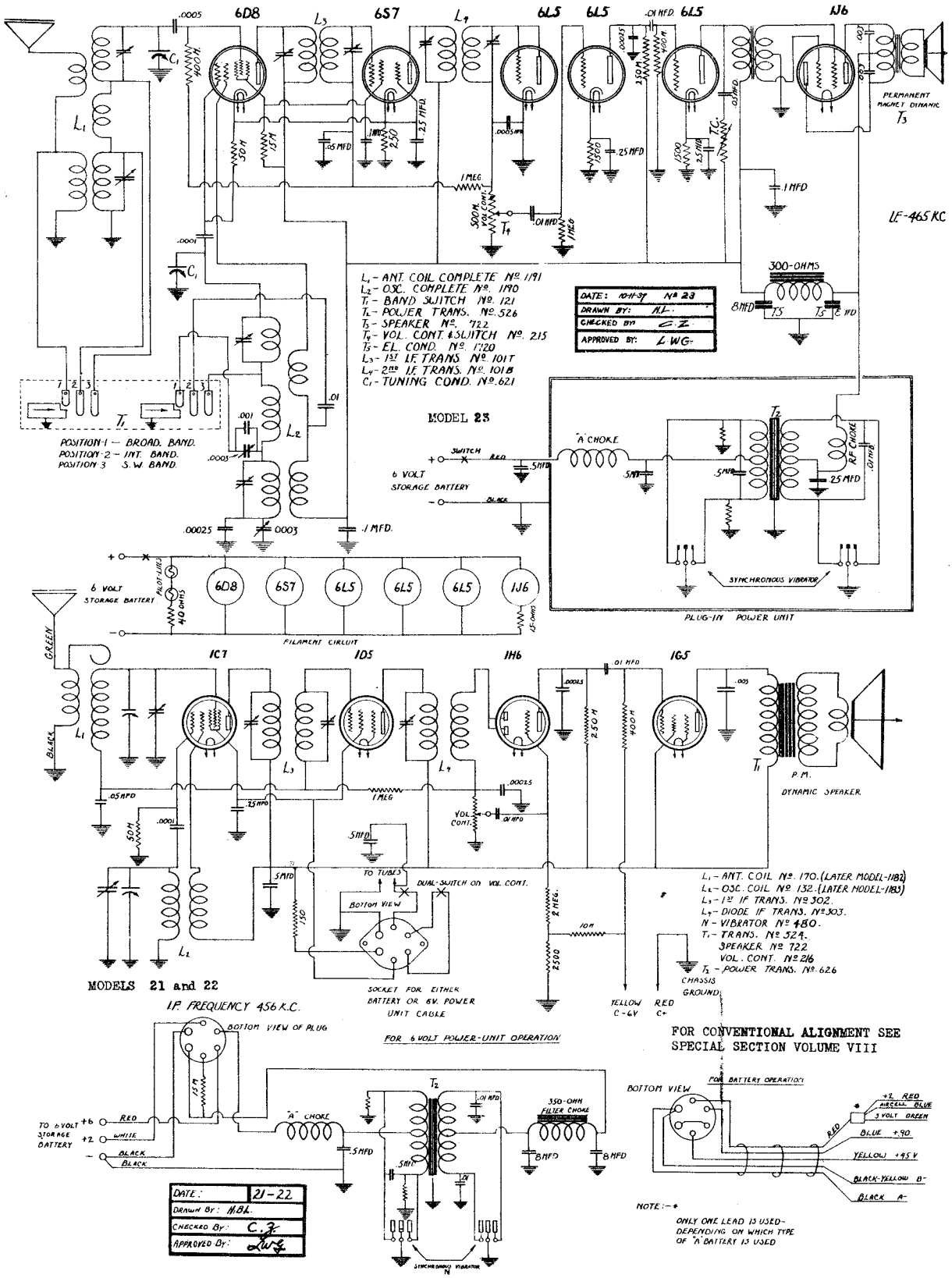

©John F. Rider, Publisher

MODEL 35
Schematic, Socket
Trimmers, Alignment

PACIFIC RADIO CORP.

MODELS 43, 302, 601
8T-6V
Alignment

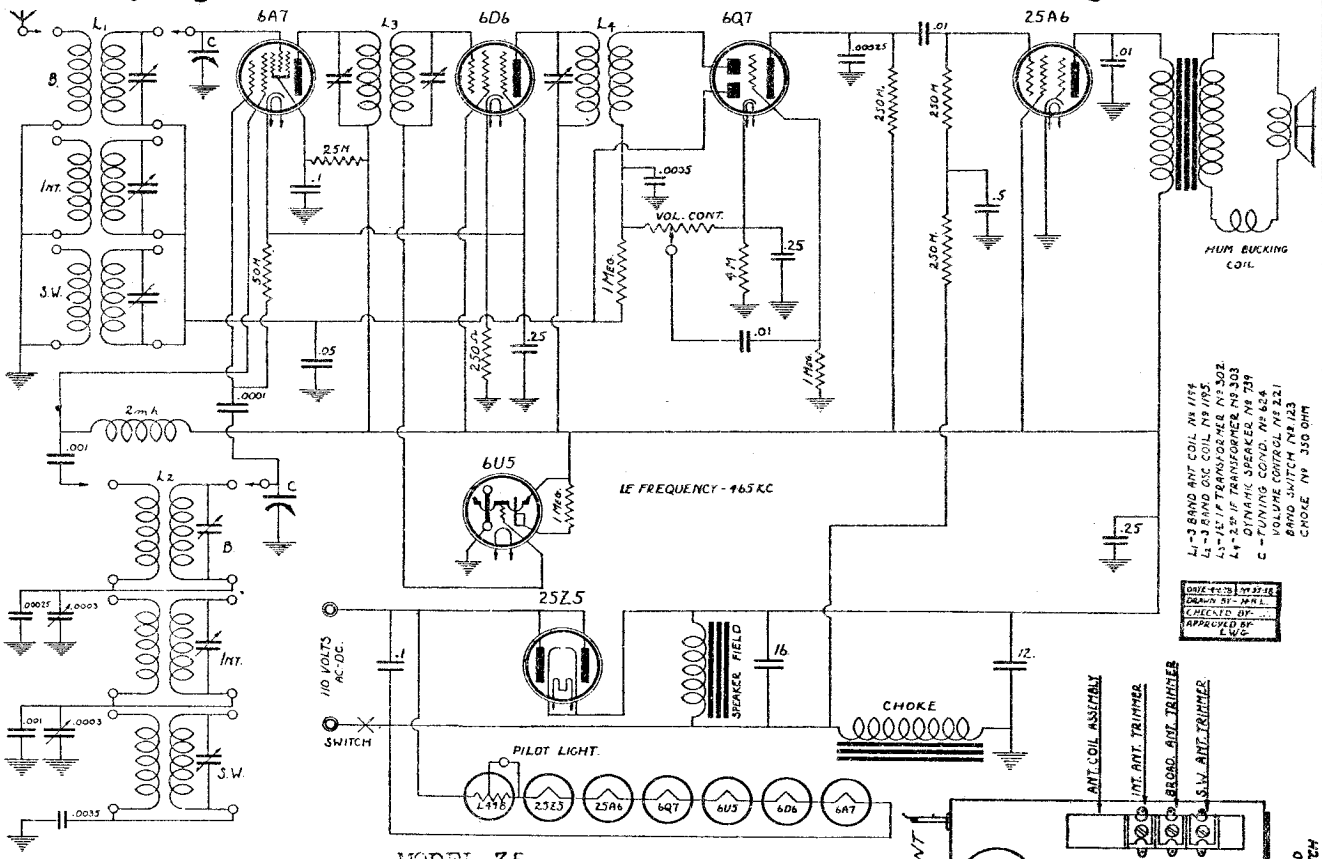

MODEL 35

SWITCH POSITION	BAND	RANGE IN KILOCYCLES
Left	Broadcast	540— 1710 KC
Center	Intermediate	1710— 5800 KC
Right	Short Wave (foreign)	5800—17500 KC

ALIGNMENT DATA FOR MODELS 35, 43, 302, 601, AND 8T-6V

INTERMEDIATE FREQUENCY: Set oscillator to 465 KC. Feed this to the grid of the pentagrid converter tube. Adjust trimmers on the intermediate frequency transformers for peak readings as indicated on the output meter which is to be placed across the output transformer.

BROADCAST BAND: Set the band switch for broadcast reception. Adjust oscillator to 1400 KC and connect the output of the generator to the antenna connection at the rear of the chassis through a .0002 mfd. mica condenser. Set the pointer on the dial to 1400 KC making sure that the volume control is set at its maximum position. Adjust the broadcast antenna and broadcast oscillator trimmers for maximum signal (as indicated on the output meter). Re-set the dial pointer on the receiver and on the test oscillator to 600 KC. Slowly increase or decrease the *broadcast padding* condenser while tuning back and forth across the signal with the station selector knob until the maximum reading is obtained on the output meter. Re-check the 1400 KC alignment as the adjustment at 600 KC may have slightly disturbed the original 1400 KC setting.

INTERMEDIATE BAND: For a dummy antenna use a .0002 mfd. mica condenser in series with a 400 ohm carbon resistor. Set band switch to the intermediate band position and feed a 5100 KC signal from the oscillator. Set dial pointer at 5100 KC. Adjust intermediate antenna and intermediate oscillator trimmers for maximum output. Re-set oscillator and set dial to approximately 1800 KC. Slowly increase or decrease the intermediate padding condenser while tuning back and forth across the signal with the station selector control until the maximum reading is obtained on the output meter. Re-check the 5100 KC adjustment.

SHORT WAVE: Set band switch on short wave position. Connect the antenna of the radio receiver to the output of the test oscillator through a 400 ohm carbon resistor. Set oscillator and receiver dial at 15 megacycles. Adjust the short wave antenna and short wave oscillator trimming condensers for maximum output as indicated by readings on the output meter. No other adjustments are necessary for aligning this band.

It is advisable to check the sensitivity at 6000 KC to determine whether the circuits are properly aligned. Should the receiver lack sensitivity at this frequency check the .0035 mica condenser for short circuit.

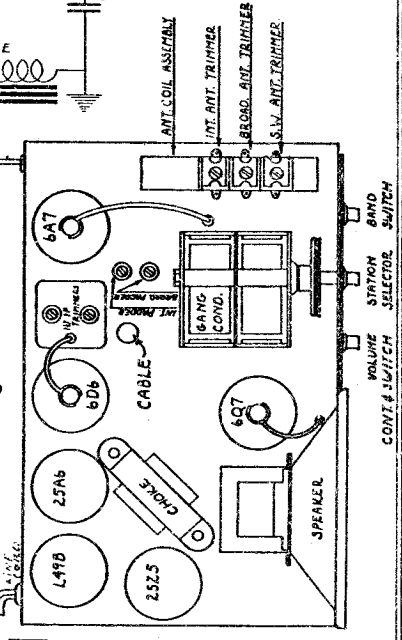

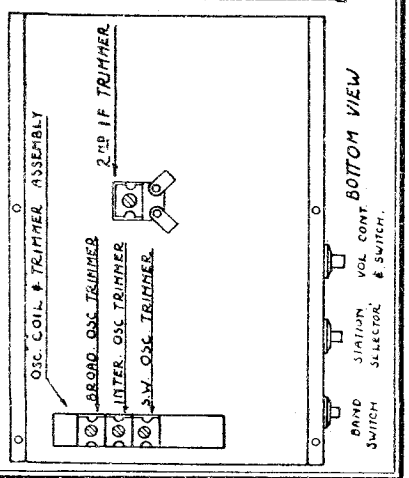

©John F. Rider, Publisher

MODEL 43
Schematic, Socket
Trimmers

PACIFIC RADIO CORP.

DO NOT ATTEMPT TO OPERATE THIS RECEIVER ON DIRECT CURRENT (D.C.) OR ANY OTHER VOLTAGE OR CYCLE AS PERMANENT INJURY TO THE SET WILL RESULT.

BAND	*RANGE IN KILOCYCLES*
Broadcast	540— 1710 KC
Intermediate	1710— 5800 KC
Short Wave (foreign)	5800—17500 KC

FOR ALIGNMENT DATA SEE MODEL 35

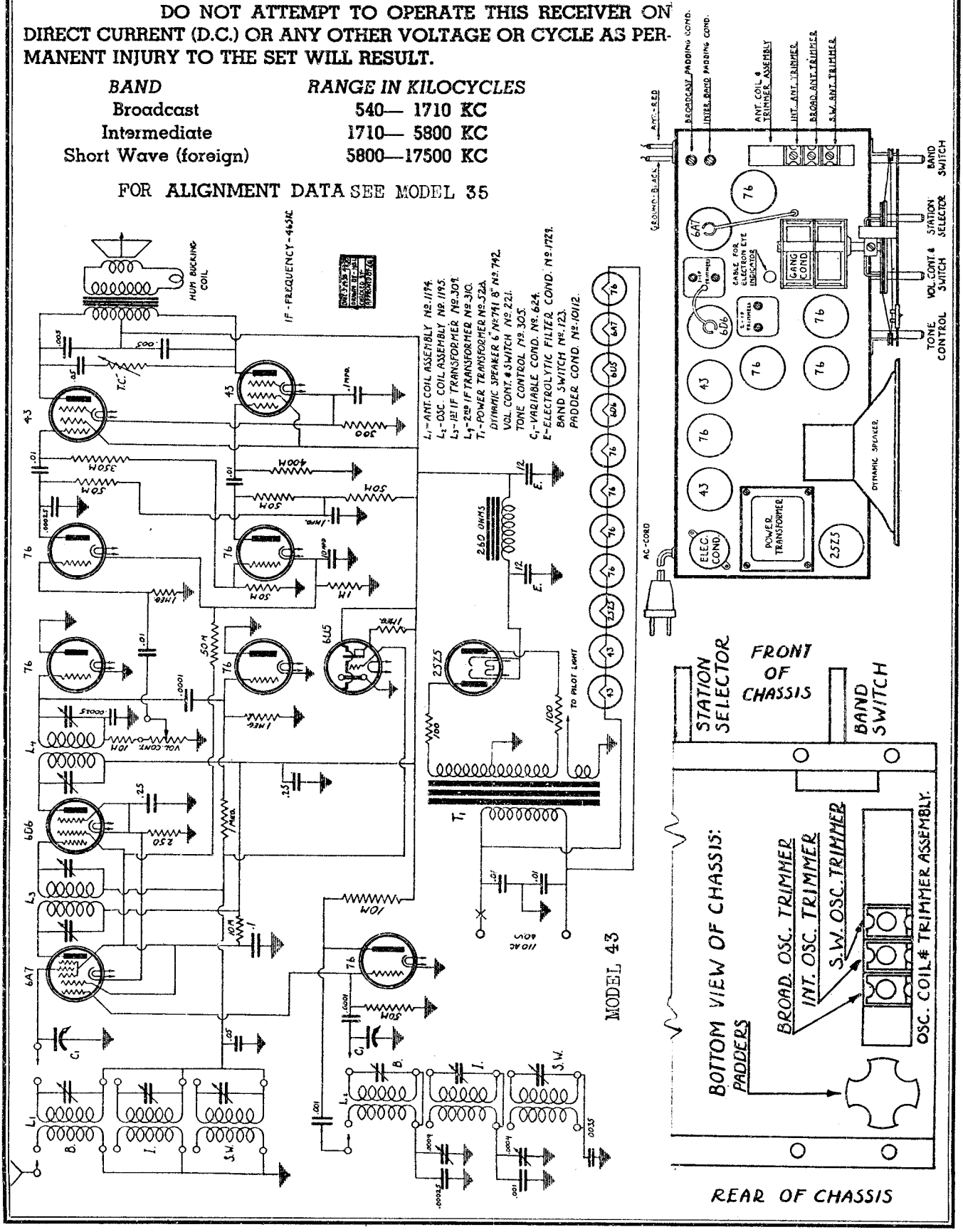

©John F. Rider, Publisher

MODEL 302
Schematic

PACIFIC RADIO CORP.

MODEL 601
Schematic, Socket
Trimmers

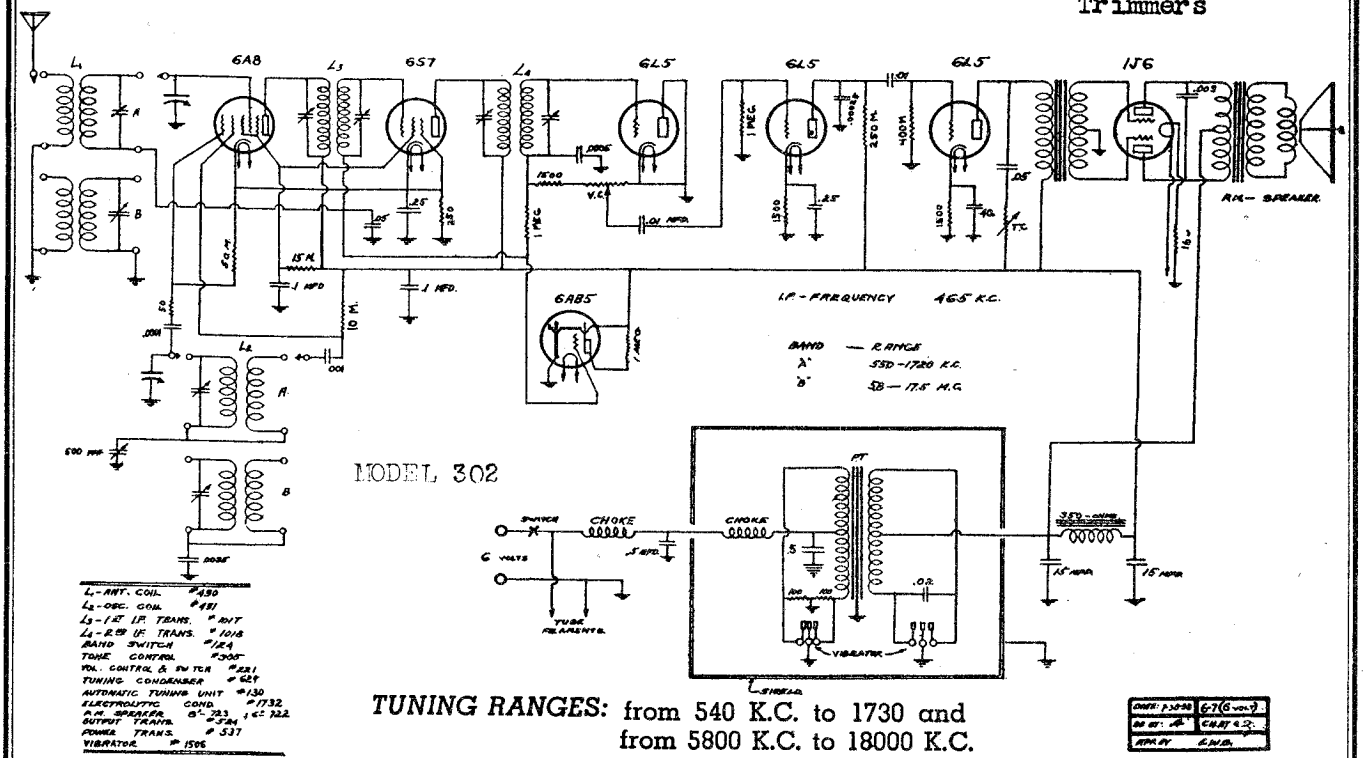

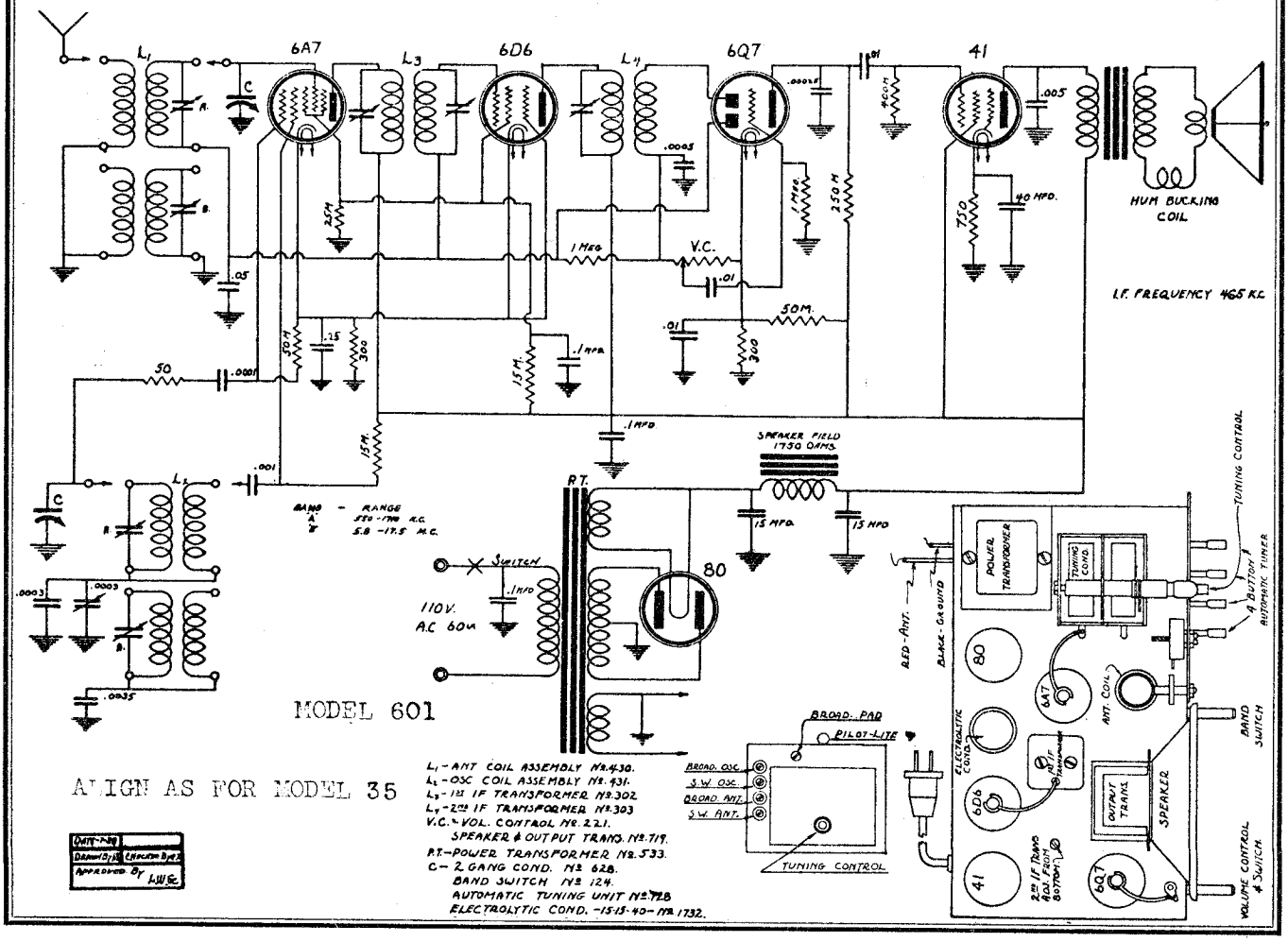

©John F. Rider, Publisher

MODELS 5M, 35M
MODEL 5TP
MODEL 46D
Schematics

PACKARD BELL CO.

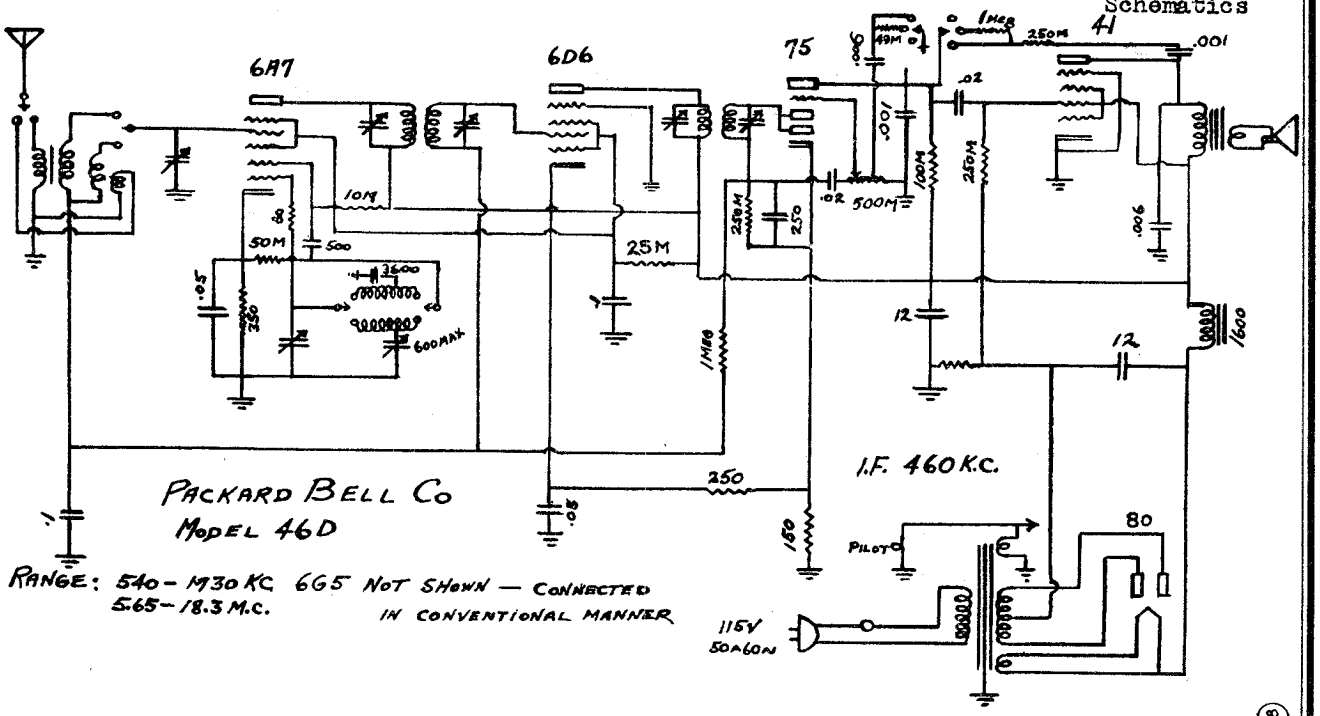

PACKARD BELL CO
MODEL 46D

RANGE: 540 - 1730 KC 6G5 NOT SHOWN — CONNECTED
5.65 - 18.3 M.C. IN CONVENTIONAL MANNER

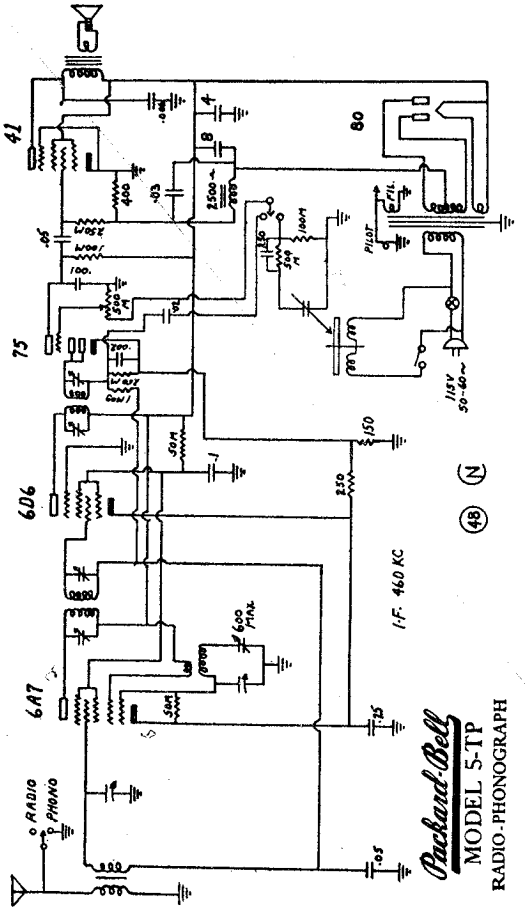

(48) (N)

Packard Bell
MODEL 5-TP
RADIO-PHONOGRAPH

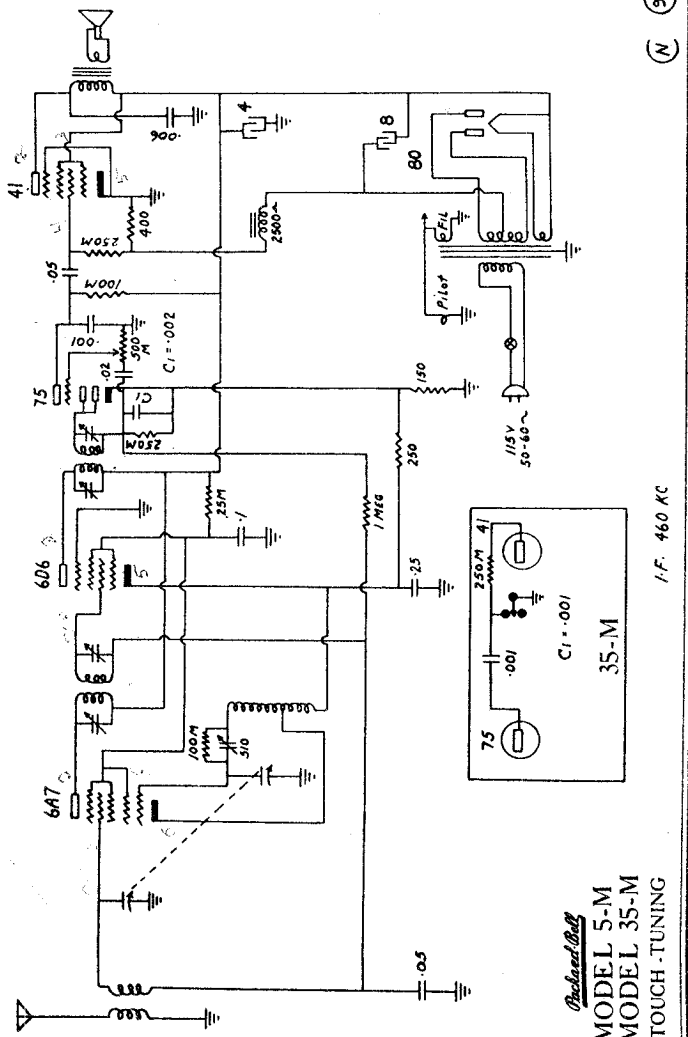

(38) (N)

Packard Bell
MODEL 5-M
MODEL 35-M
TOUCH-TUNING

©John F. Rider, Publisher

MODEL 46DP
MODEL 48B
Schematics

PACKARD BELL CO.

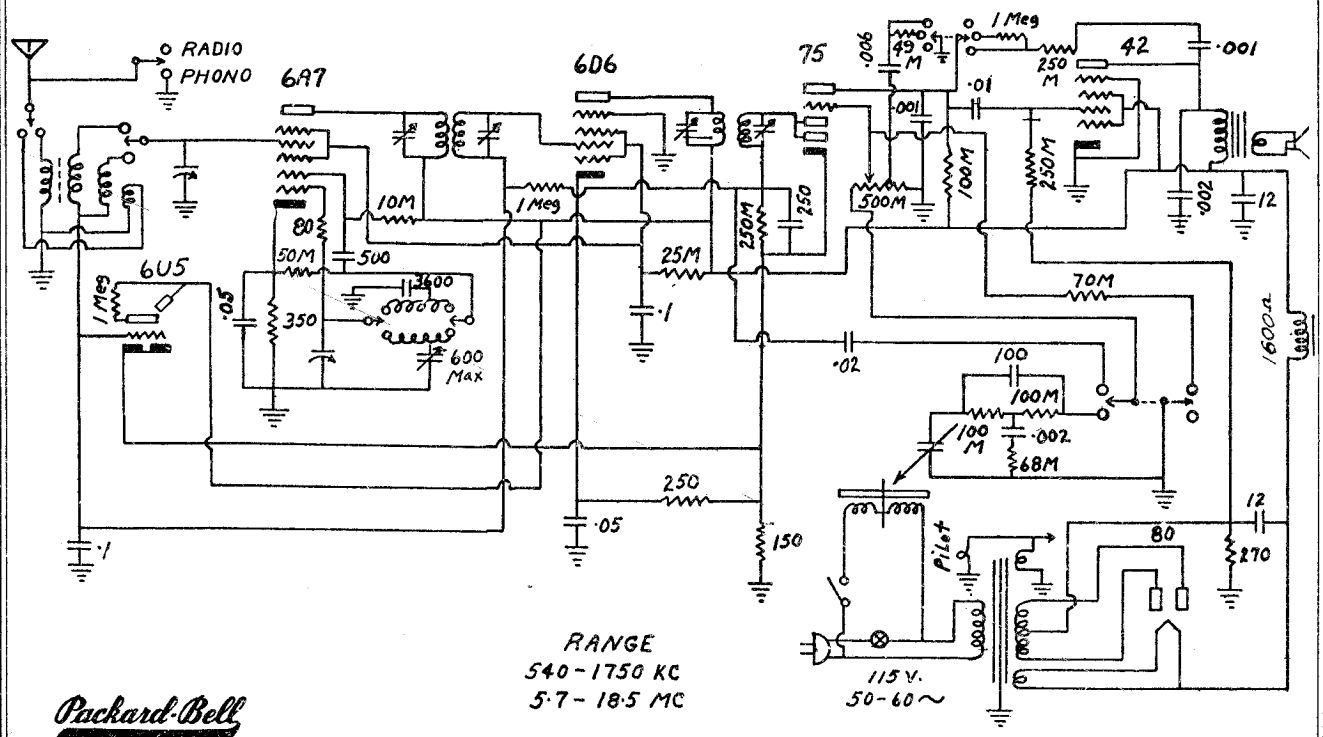

RANGE
540 - 1750 KC
5·7 - 18·5 MC

Packard-Bell
MODEL 46-DP
RADIO-PHONOGRAPH

I.F. 460 KC

48 N

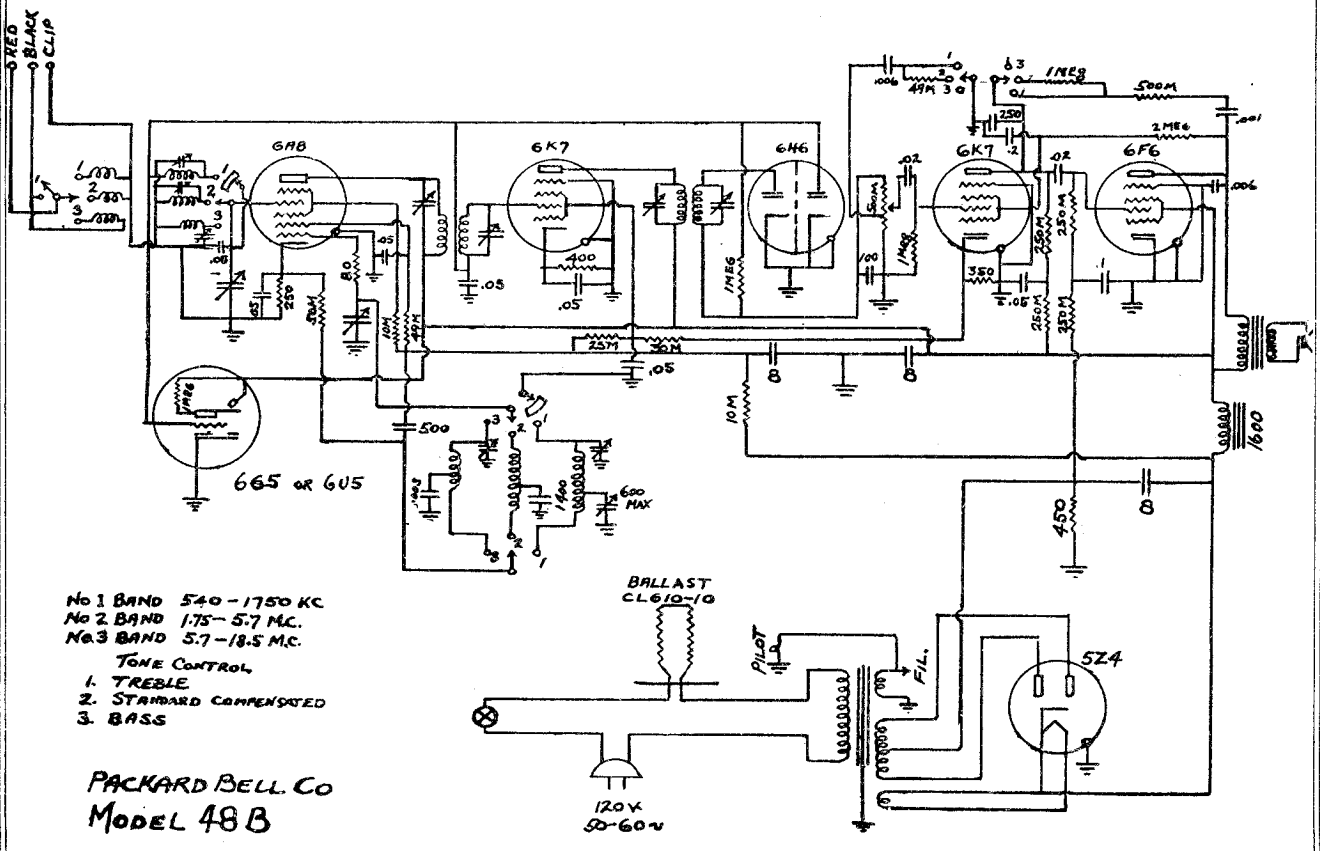

No 1 BAND 540 - 1750 KC
No 2 BAND 1.75 - 5.7 M.C.
No 3 BAND 5.7 - 18.5 M.C.

TONE CONTROL
1. TREBLE
2. STANDARD COMPENSATED
3. BASS

PACKARD BELL CO
MODEL 48B

I.F. 460 KC.

©John F. Rider, Publisher

MODEL 120-AB
Schematic

PACKARD BELL CO.

MODEL 66
Schematic, Socket Tuner

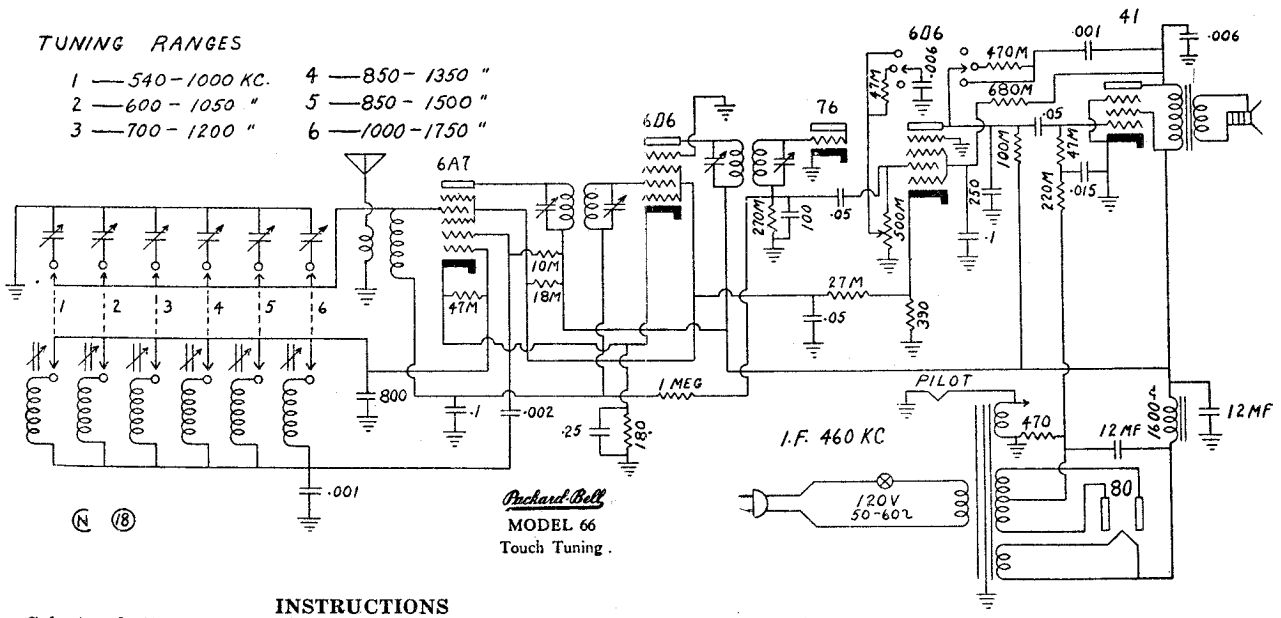

INSTRUCTIONS

Selector buttons are numbered from 1 to 5, reading from left to right. Stations selected should be placed in numerical order with respect to frequency. Lowest frequency should appear on Selector No. 1. Next lowest on Selector No. 2, and so on up to Selector No. 5 for station with highest frequency. For frequency, see above.

RECEIVERS LEAVE FACTORY ADJUSTED AS FOLLOWS: No. 1 button—600 K. C., No. 2—800 K. C., No. 3—1000 K. C., No. 4—1200 K. C., No. 5—1400 K. C.

PROCEDURE: Five stations should first be selected and considered in numerical order according to kilocycles. The station with the lowest frequency number should be assigned to the first push button—and so on.

Push button No. 1 to "IN" position, then select station assigned this button by turning Oscillator (Station selector) screw No. 1 until station is heard best, then further adjust by turning Antenna Trimmer screw No. 1 until station is heard with maximum volume and clarity. Remember, you can check your accuracy in setting the stations on the buttons by tuning the receiver manually to the station and then pushing the station button and comparing the results. (If the station desired has a lower kilocycle frequency than the button has been set at the factory, turn the oscillator screw clockwise to find the station, or, if higher, turn counter-clockwise.) After the first station is set, repeat this procedure with the second station, pushing button No. 2 and adjusting oscillator screw No. 2 and antenna screw No. 2, in order to set for the station desired. Repeat this procedure until all five stations are set.

Antenna adjustment should be made after oscillator screw has been set. When volume is at maximum and interference noises at a minimum, antenna adjustment is correct.

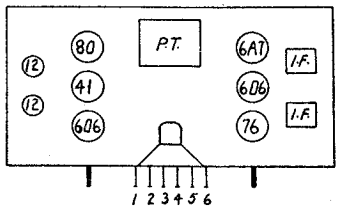

The push button marked "dial" is for the sole purpose of changing to manual tuning. However, do not use this button to change from manual to push button tuning—simply push button desired and the receiver will be on push button tuning until the button marked "dial" is used.

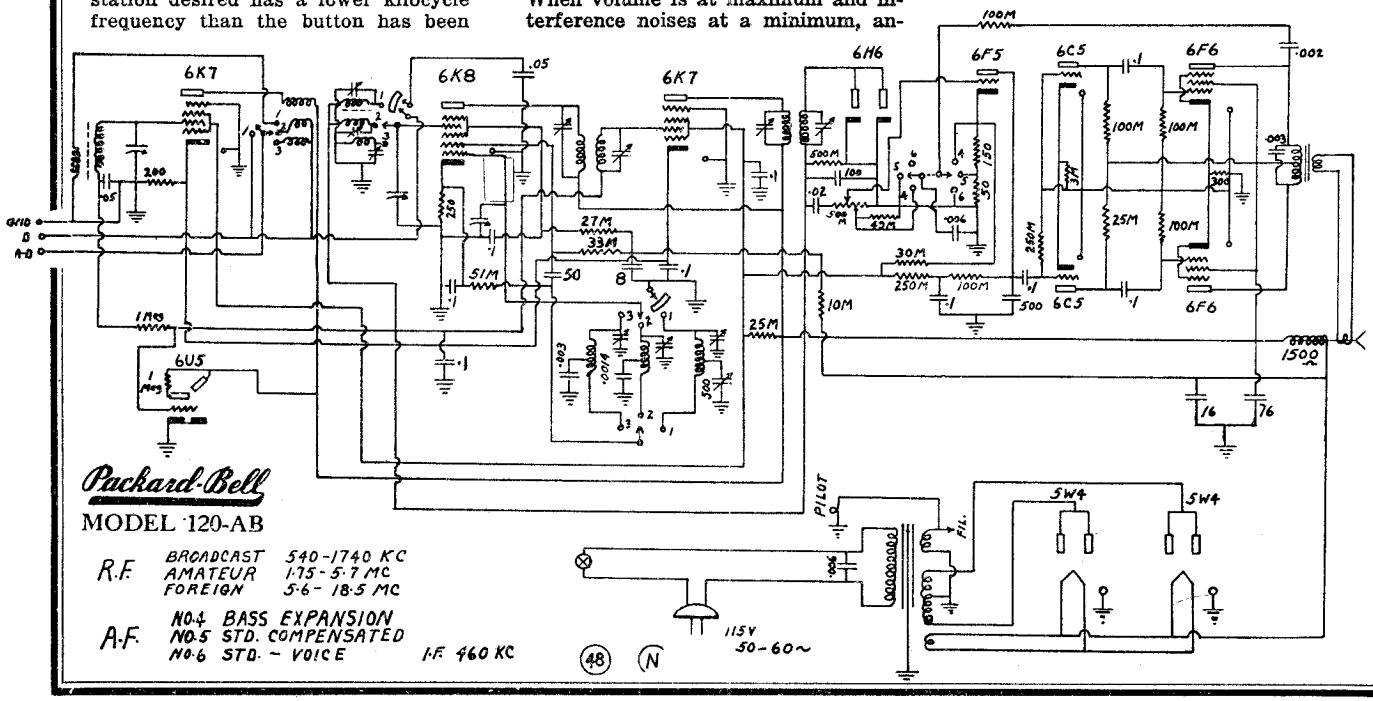

©John F. Rider, Publisher

MODEL 78 Auto
Schematic, Socket
Alignment

PACKARD BELL CO.

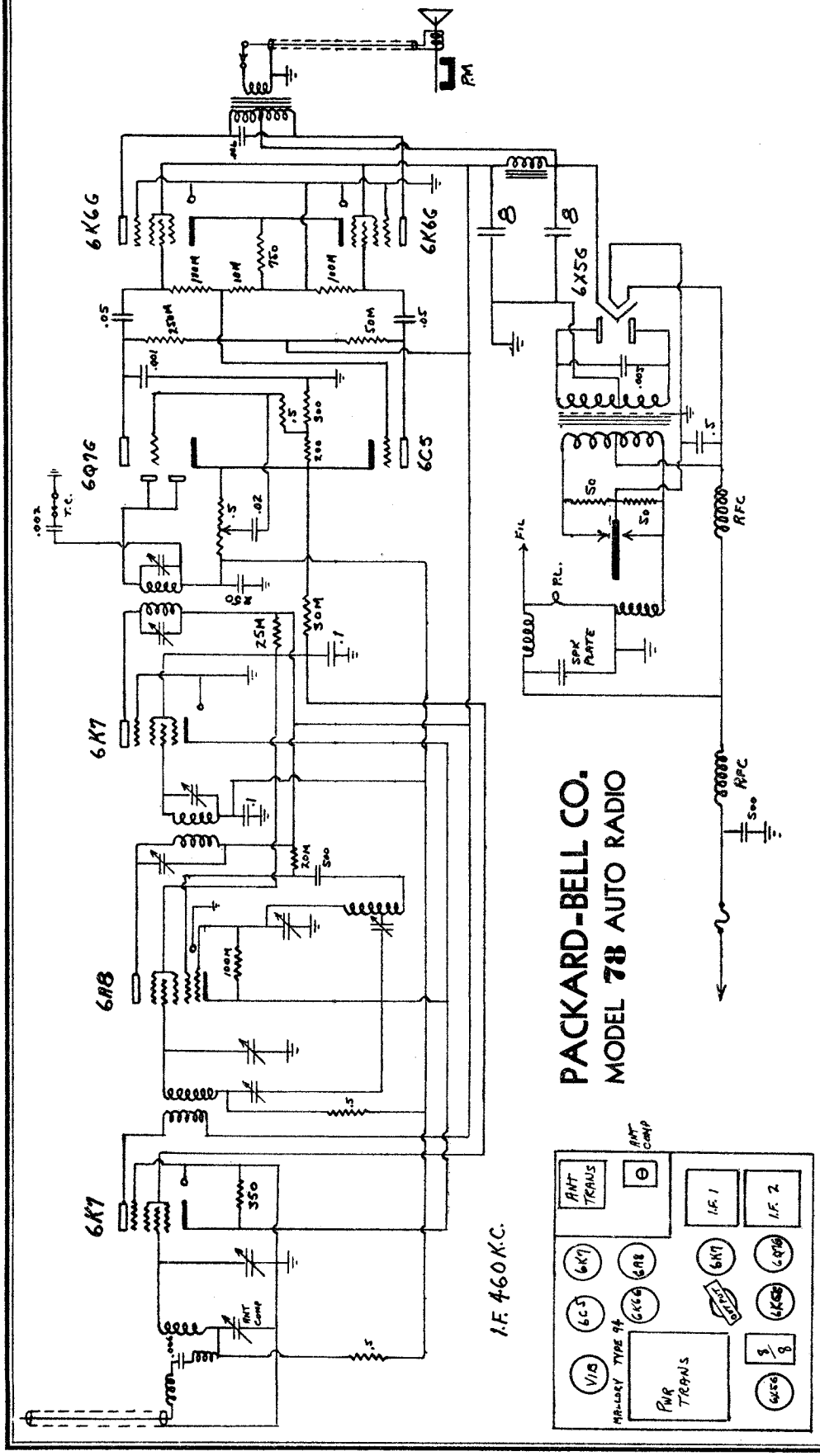

ADJUSTMENT OF DIAL is accomplished by removing pilot light in rear of control head and inserting small screw-driver in slot provided for this purpose, turning pointer to desired setting.

ANTENNA COMPENSATOR is located in front corner of box and may be trimmed with a small screw driver, preferably insulated. To do so, remove button in box.

Turn station selector knob to right until stop is reached; adjust dial pointer to right hand stop line mark on dial face. This sets pointer for calibration.

Tune in a weak signal between 550 and 650 Kcs. and adjust compensator for maximum volume . . . no other adjustments are necessary as radio will be perfectly matched to your antenna.

In cases where antenna or lead wire contribute excessive capacity to system a small series by-pass condenser of from 250 to 500 micro-microfarads capacity must be connected in series at the receiver and shielded.

Excessive antenna capacity may be detected by an apparent broad trimming action when adjusting compensator.

©John F. Rider, Publisher

PATTERSON RADIO CO.

MODELS 78B,79B,80B
Chassis 77B,77BA
Schematic,Socket
Trimmers,Phono.
Notes

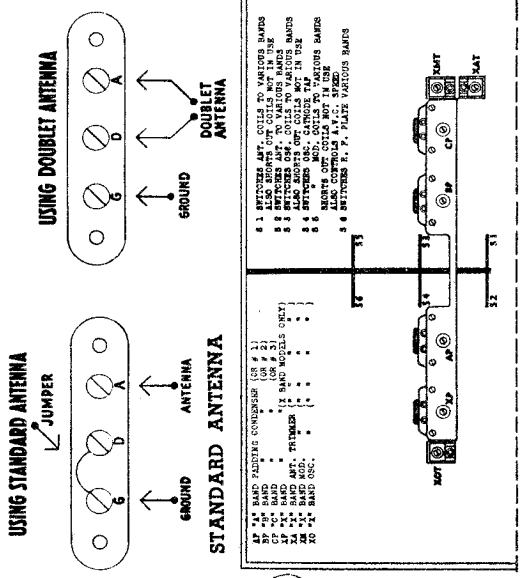

FIG. 5

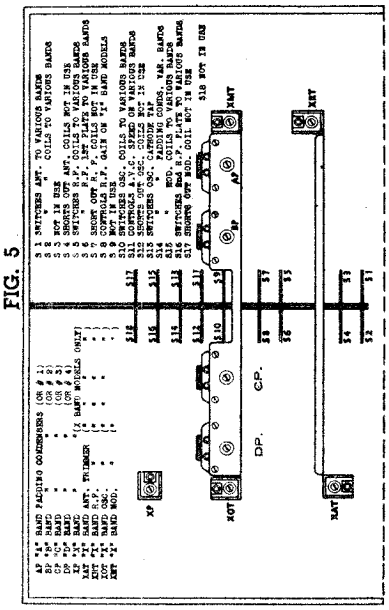

FIG. 7

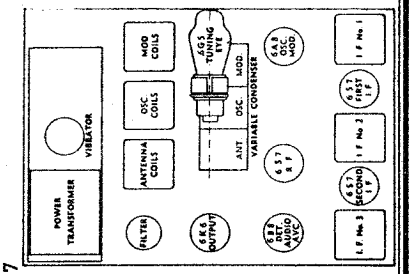

BATTERY MODEL

Be sure the "red" battery clip on end of radio battery lead is connected to the positive terminal of radio battery. DO NOT increase the length of battery leads. Leads to Wincharger may be any reasonable length, but should not be smaller than No. 10 wire for best results. A good, short and direct ground should be used on all battery models, connected to "G" terminal on back of radio.

Failure to use ground will result in poor performance. (See antenna and ground instructions on page 4.) Aligning and calibration instructions appear on pages 4 and 5.

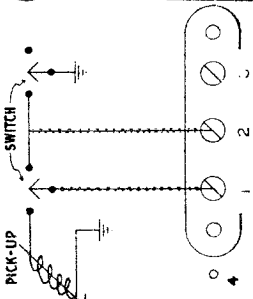

PHONO-PICKUP

Remove jumper which connects terminals No. 1 and No. 2: Standard High Impedance pickup must be used. It is essential that leads from terminals No. 1 and No. 2 be shielded and the shielding grounded to chassis at No. 4 which hole is provided in all chassis for this purpose. One side of pickup unit must also be grounded.

All receivers come in either standard 120 Volts, 50-60 Cycles or Universal 120 Volts and 240 Volts, 50-60 Cycles.

In the case of Universal transformer be certain that the connections on the voltage strip (Figure 3-4) correspond to the line voltage on which the radio is to be operated, otherwise the radio will be damaged. This terminal strip is located under the chassis and adjacent to power transformer leads.

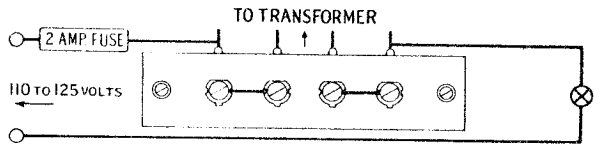

FIG. 3

Proper connection for 110-volt to 125 volt operation. Use 2 Amp. Fuse.

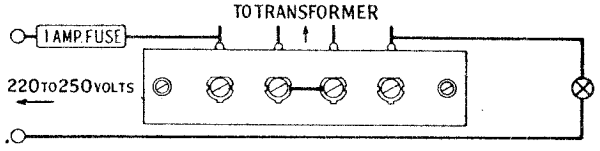

FIG. 4

Proper connection for 220-volt to 250-volt operation. Use 1 Amp. Fuse.

FUSE—The fuse is located on the back panel of chassis (see Fig. 1) and may be replaced by unscrewing small black knob marked "fuse." Fuse then lifts out with knob. Disconnect radio from power line before making fuse change.

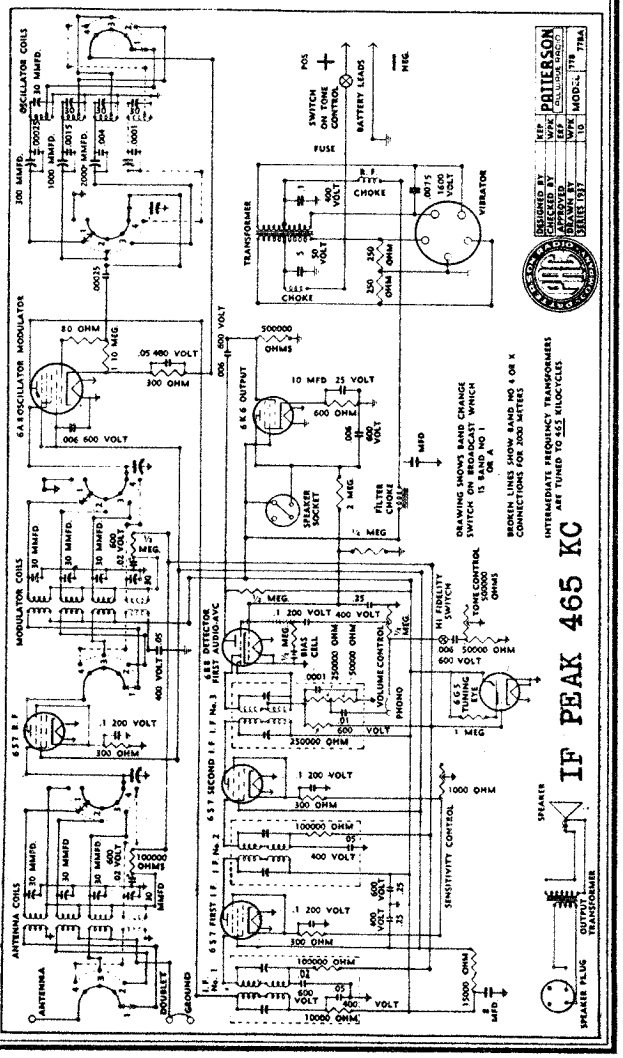

©John F. Rider, Publisher

MODEL 128
Chassis 228,428
Schematic, Voltage
Trimmers

PATTERSON RADIO CO.

ALIGNMENT (SEE PROCEDURE MODEL 128)

Note: When making adjustments of modulator trimmers on all models and particularly the highest frequency bands, loosening of the modulator trimmer too far may cause a false resonance indication caused by the oscillator curve being "crossed over" removing oscillator lead or changing oscillator frequency, will readily show if this has occurred as no change in resonance indication will be apparent, also the set will be quite dead at the high frequency end of the band the true resonance point is with the modulator screwed in about one turn or less from the point where blocking occurs. The true resonant point will be quite apparent on resonance indicating devices.

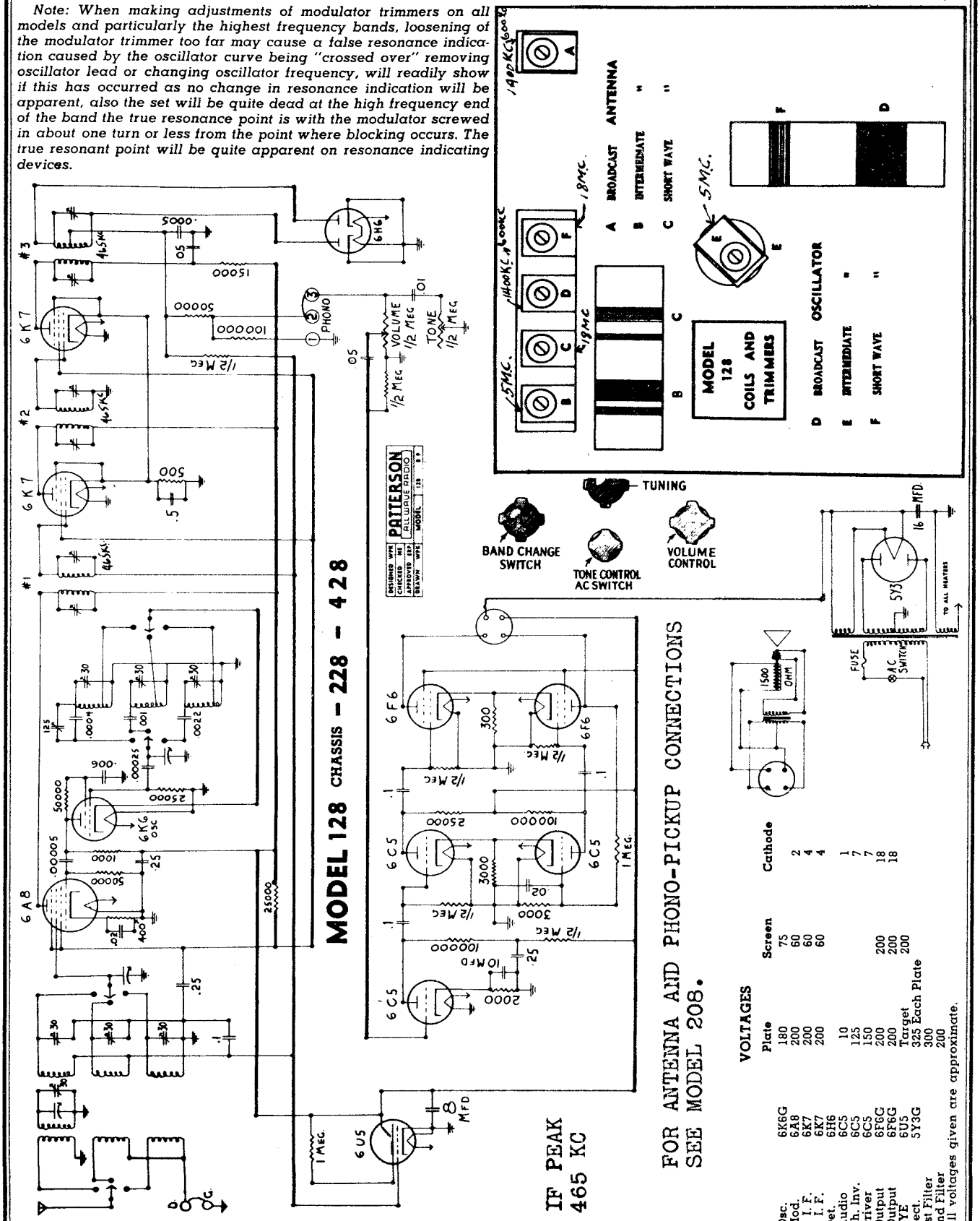

VOLTAGES

		Plate	Screen	Cathode
Osc.	6K6G	180	75	2
Mod.	6A8	200	60	4
1 I. F.	6K7	200	60	4
2 I. F.	6K7	200	60	
Det.	6H6			
Audio	6C5	10		1
Ph. Inv.	6C5	125		7
Driver	6C5	150		7
Output	6F6G	200	200	18
Output	6F6G	200	200	18
EYE	6U5	Target	200	
Rect.	5Y3G	325 Each Plate		
1st Filter		300		
2nd Filter		200		

All voltages given are approximate.

©John F. Rider, Publisher

Schematics, Socket Trimmers, Voltage

PATTERSON RADIO CO.

MODEL 168, 268
MODELS 198, 298

VOLTAGES

The following tables show characteristic voltages at various points through a normal chassis.

All voltages measurable as follows: Band switch on any band; Antenna removed, no signal being received. Line voltage 120 V. A.C. (unless model is 220 V.).

Rectifier Filaments 5 V. A.C.† All Other Filaments 6.3 V. A.C.†

9-TUBE CHASSIS

	Plate	Screen	Cathode	Suppressor
6K7 RF.	260 V.+App.	100 V.+App.	Grounded	Grounded
6A8 Mod.	260 V.+App.	100 V.+App.		
6A8 Osc.	50 V.+App.			
6K7 I.F.	260 V.+App.	100 V.+App.	+6 V. App.	To Cathode
6H6 Det.			Cathode Grounded	
6N7 Aud.	#1-100 V.+App.			
	#2-160 V.+App.		+3 V. App.	
6V6 O.P.	250 V.+App.	260 V.+App.	+20 V. App.	
6V6 O.P.	250 V.+App.	260 V.+App.	+20 V. App.	
Filter #1	350 V.+App.	#2 260 V.+App.		
6V5 Target	260 V.+App.		Grounded	
5Y3 Rect.	#1 350 V.A.C.			
	#2 350 V.A.C.			

MODELS 168,268-198,298.

FOR ALIGNMENT, SEE INDEX

7-TUBE BATTERY CHASSIS LAYOUT

9-TUBE CHASSIS LAYOUT

7-TUBE BATTERY MODELS

9 Tube AC Models
7 Tube Battery Models
THREE BAND RECEIVER

550 Kilocycles to 18 Megacycles (16 to 550 Meters)

1938 SERIES

IF PEAK 465 KC

9-TUBE MODELS

©John F. Rider, Publisher

©John F. Rider, Publisher

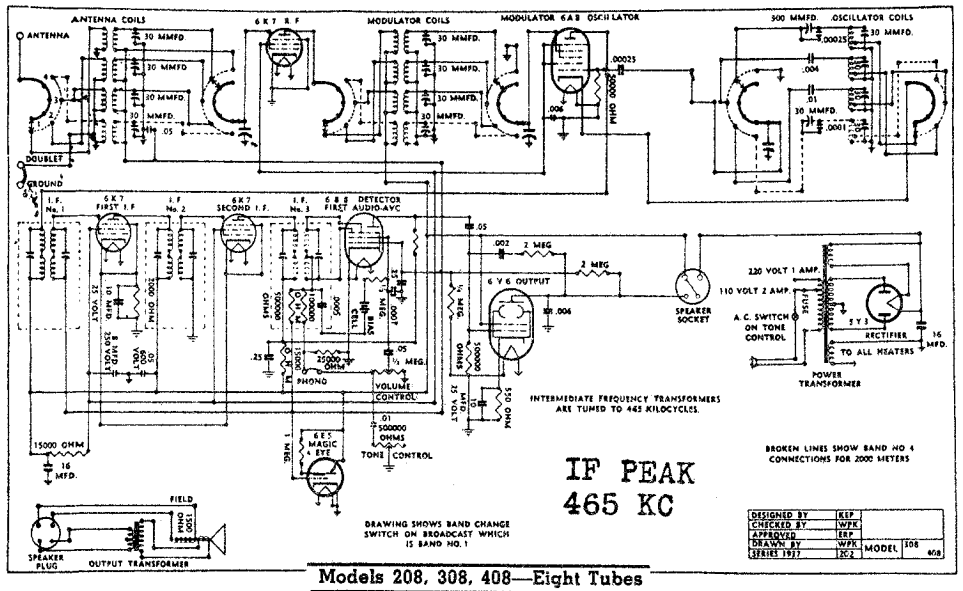

Models 208, 308, 408—Eight Tubes

THREE BAND RECEIVER

**550 Kilocycles to 18 Megacycles (16 to 550 Meters)*

1937-1938 SERIES

FOR ALIGNMENT AND VOLTAGE SEE INDEX.

* Range 1937 Series - 530KC-18MC

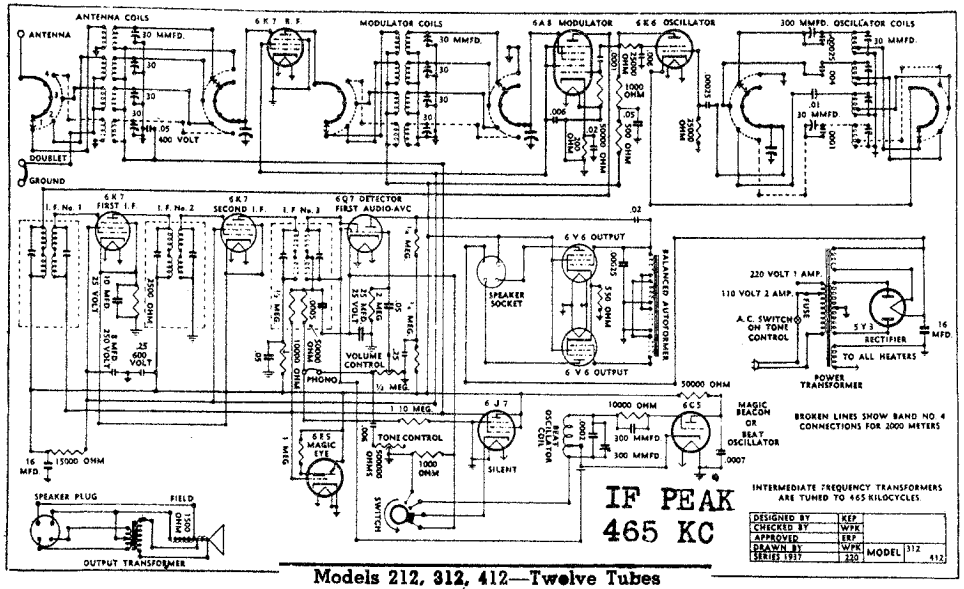

Models 212, 312, 412—Twelve Tubes

Stations Located on Each Band

BAND No. 1

550-1750 kcs. (171-550 meters)

STANDARD BROADCAST, domestic, foreign and police stations.

POLICE CALLS, 1600 kcs. to 1750 kcs.

BAND No. 2

1.7 megacycles to 6.2 megacycles (49 to 171 meters)

AMATEUR PHONE (voice), 1.8-2 megacycles.

POLICE CALLS, 2.4-2.5 megacycles.

AIRCRAFT (night) signals, 3.2-3.5 megacycles.

AMATEUR PHONE (voice), 3.9-4.0 megacycles.

AIRCRAFT (day) signals, 4.0-4.5 megacycles.

BAND No. 3

6 megacycles to 18 megacycles (16 to 50 meters)

SHORT WAVE BROADCAST, 49 meter band, 6.0-6.2 megacycles.

AMATEUR (voice and code), 40 meter band, 7.0-7.3 megacycles.

SHORT WAVE BROADCAST, 31 meter band, 9.4-10 megacycles.

SHORT WAVE BROADCAST, 25 meter band, 11.4-11.9 megacycles.

AMATEUR (voice and code), 20 meter band, 14.0-14.4 megacycles.

SHORT WAVE BROADCAST, 19 meter band, 15.1-15.35 megacycles.

SHORT WAVE BROADCAST, 16 meter band, 17.1-17.8 megacycles.

AC MODEL ONLY

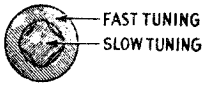

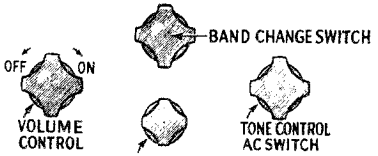

Right—Beat Oscillator.
Center—Off.
Left—Silent between Stations.
8 and 12-tube Models.
9 and Battery marked on knobs.

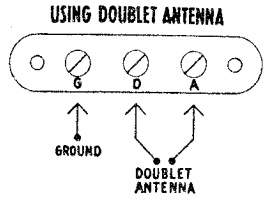

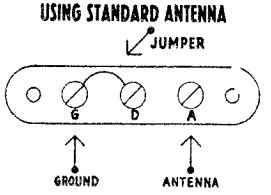

STANDARD ANTENNA

Simply connect to terminals A and G as shown in diagram above.

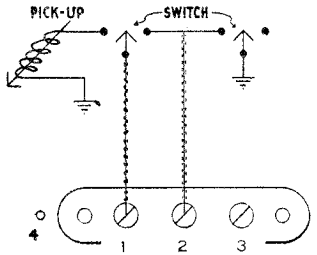

PHONO-PICKUP

Remove jumper which connects terminals No. 1 and No. 2. Standard High Impedance pickup must be used. It is essential that leads from terminals No. 1 and No. 2 be shielded and the shielding grounded to chassis at No. 4 which hole is provided in all chassis for this purpose. One side of pickup unit must also be grounded.

MODELS 212,312,412
Alignment

PATTERSON RADIO CO.

MODEL 128
MODELS 168,268
MODELS 198,298
MODELS 208,308,408

Alignment and Calibration Procedure

8-10-12-Tube Models

I. F. ALIGNMENT—ALL MODELS

In the following instructions for alignment the term V. T. V. M. shall be understood to mean Vacuum Tube Voltmeter or eye tube, and the term "resonance" means that the meter shows the greatest swing toward zero, or that the eye tube shows the narrowest dark section. Turn band selector switch to band "a" or No. 1. Place service oscillator in operation on 465 Kc. Connect grid of voltmeter to A. V. C. buss and ground of voltmeter to chassis. A convenient place to connect the voltmeter grid is on the terminal for the eye cable. This is located underneath on the floating R. F. section and between the back end of wave change switch and first R. F. tube socket. Connect to the terminal to which the green lead in the eye cable is connected. In lieu of a V. T. V. M. the eye tube itself may be used as a resonance indicator (adjusting for the narrowest dark section) although this method is seldom as accurate as when using a V. T. V. M. Another method which is by far the most accurate of all and which we strongly advise wherever possible is the use of the cathode ray oscilloscope and rotary sweep generator. This method will be discussed later in these notes.

Note: Refer to sketches in Figures 9, 10 and 11 for position of various tubes, coils and other components on all models.

CAUTION: Before making any adjustments on 12 tube model, be sure that the high fidelity switch is in the off position and remains there during adjustments. See tuning reference first page. Do not attempt to bend any of variable condenser plate flaps during alignment, particularly on the 12 tube models. The variable condensers are all carefully calibrated during the original alignment and should not require any further calibration during the life of the radio.

Remove grid cap from second I. F. tube (6K7) and apply oscillator output lead to grid of this tube and adjust trimmers on No. 3 I. F. transformer until resonance is indicated on V. T. V. M. The service oscillator output should be set for a quite high output when making this adjustment. Next remove oscillator lead and replace the cap on this tube. Then remove grid cap of first I. F. tube (6K7) and apply service oscillator output lead to grid of this tube and repeat adjustment as before this time adjusting trimmers on No. 2 I. F. transformer until V. T. V. M. indicates resonance. Reducing service oscillator output as necessary to obtain an easily readable indication. Next remove service oscillator lead and replace cap on first I. F. tube. Then remove cap from the Modulator tube 6A8 or 6L7 (as the case may be) and apply service oscillator output lead to grid of this tube, this time adjusting trimmers on No. 1 I. F. transformer, reducing service oscillator output as required and adjusting for resonance. Now without making any further changes go over all I. F. trimmers one by one carefully readjusting for exact resonance. This completes the alignment of the I. F. amplifier.

CALIBRATION OF VARIOUS BANDS—8-10 TUBE MODELS ONLY

Note: Refer to Figures 6, 9 and 10 for location of various coils and trimmers. (Refer to Fig. 5) for location of padding condensers.

BAND "A" (OR—No. 1) BROADCAST

Connect V. T. V. M. to A. V. C. buss and chassis ground, as described above for I. F. alignment. Turn band selector switch to band "A" (or No. 1). Place service oscillator in operation on 1400 Kc. and connect service oscillator output lead to antenna terminal of radio through a .0001 condenser or less or through standard dummy antenna. It will be necessary to keep the service oscillator output control well reduced during the following adjustments.

Set main tuning dial of radio to 1400 Kc. and adjust trimmer "A" in side of oscillator coil, Figure 4, to resonance. Next adjust trimmers "A" on the antenna and modulator coil to resonance. Next set service oscillator to 600 Kc. and set radio dial to 600 Kc. adjust padding condensers, "AP" to resonance. (Only a solid bakelite or other insulating screw driver will be satisfactory for adjusting any of the padding condensers as well as No. 3 I. F., an ordinary screw driver will be satisfactory for all other adjustments.) Now reset both service oscillator and radio dial to 1400 Kc. and retouch trimmer "A" on oscillator coil to resonance.

It may be well at this time also to recheck trimmers "A" on the antenna and modulator coils. This completes calibration and alignment of Band "A."

BAND "B" (OR NO. 2) SHORT WAVE BAND

Turn band selector switch to Band B, leaving all connections made as before for "A" band set service oscillator at 6 M. C. also set radio dial at 6 M. C. and adjust trimmer "B" on oscillator coil to resonance as indicated on V. T. V. M. Next adjust trimmers "B" on antenna and modulator coils to resonance. Change both service oscillator and radio dial to 2 M. C. and adjust "BP" padding condenser to resonance. Reset both radio dial and service oscillator to 6 M. C. and recheck trimmer "B" on oscillator coil for resonance. This completes calibration and alignment of Band "B."

BAND "C" (OR NO. 3) SHORT WAVE BAND

Turn band selector switch to Band "C." Set radio dial and service oscillator to 17 M. C. and adjust trimmer "C" on oscillator coil to resonance, it may be well to turn trimmers "C" on both antenna and modulator coils in about one turn before making above adjustment. Then after oscillator trimmer has been set retune trimmers "C" on modulate coil to resonance slowly turning main tuning dial back and forth slightly as adjustment is being made until resonance is indicated on V. T. V. M., retouching oscillator trimmer "C" as necessary to keep it on the desired spot on tuning dial. Next adjust trimmer "C" on antenna coil to resonance without rocking main dial next set service oscillator and radio dial to 6 M. C. (Band "C") and adjust padding condenser "CP" to resonance, reset radio dial and service oscillator to 17 M. C. and recheck oscillator trimmer "C" for resonance. This completes adjustment of Band "C."

Note: When making adjustments of modulator trimmers on all models and particularly the highest frequency bands, loosening of the modulator trimmer too far may cause a false resonance indication caused by the oscillator curve being "crossed over" removing oscillator lead or changing oscillator frequency, will readily show if this has occurred as no change in resonance indication will be apparent, also the set will be quite dead at the high frequency end of the band the true resonance point is with the modulator screwed in about one turn or less from the point where blocking occurs. The true resonant point will be quite apparent on resonance indicating devices.

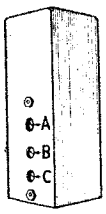

FIG. 6

X BAND (OR NO. 4)

(For models equipped with long wave weather or European band only.) Change wave band switch to "X" band. Set service oscillator and radio dial to 400 Kc., adjust oscillator trimmer "XOT" to resonance. Then adjust trimmers "XMT" and "XAT" to resonance. Then set both radio dial and service oscillator to 150 Kc. and adjust padding condenser "XP" to resonance. Reset both service oscillator and radio dial again to 400 Kc. and recheck trimmer "XOT" for resonance. This completes the calibration and alignment of all bands.

Calibration of Various Bands 12-Tube Model Only

BAND "A" (OR NO. 1) BROADCAST

Note: Refer to Figures 8 and 11 for location of various coils and trimmers. Refer to Figure 7 for location of padding condensers.

Connect V. T. V. M. and A. V. C. buss and chassis ground as described above for I. F. alignment. Turn band selector switch to Band "A" (or No. 1). Place service oscillator in operation on 1400 Kc. and connect service oscillator output lead to antenna terminal through a .0001 condenser or less or through a standard dummy antenna. It will be necessary to keep service oscillator output control well reduced during the following adjustments. Set main tuning dial of radio to 1400 Kc. and adjust trimmer "A" on oscillator coil, Figure 6. Next recheck trimmer "A" on antenna, R. F. and modulator coils to resonance, this completes alignment of band "A."

BAND "B" (OR NO. 2)

Change band switch to band "B" or No. 2, set both service oscillator and radio dial to 4 M. C. and adjust trimmer "B" on oscillator coil to resonance. Next adjust trimmers "B" on antenna, R. F. and modulator coils each in turn to resonance. Now change both service oscillator and radio dial to 1.5 M. C. (1500 Kc.), and adjust padding condenser "BP" to resonance. Reset both service oscillator and radio dial to 4 M. C. and recheck, trimmer "B" on oscillator coil to resonance. This completes alignment of Band "B."

©John F. Rider, Publisher

MODEL 128
MODELS 168,268
MODELS 198,298

PATTERSON RADIO CO.

MODELS 208,308,408
MODELS 212,312,412
Alignment, Part 2
Voltage

ALIGNMENT continued:

BAND "C" OR NO. 3

Change band switch to band "C" or No. 3. Set service oscillator and radio dial to 12 M. C. and adjust trimmer "C" to resonance. Next adjust trimmers "C" on modulator coil rocking radio tuning dial slowly back and forth as adjustment is being made, resetting oscillator trimmer if and as necessary to keep calibration correct at this point after resonance has been reached trimmer "C" on antenna and R. F. coils may be adjusted to resonance without touching any other controls. Next set both radio dial and service oscillator to 5 M. C. and adjust padding condenser "CP" to resonance. Then reset both radio dial and service oscillator to 12 M. C. and recheck trimmer "C" on oscillator coil to resonance. This completes alignment of band "C" or No. 3.

BAND "D" OR NO. 4

Change band change switch to Band "D" set service oscillator and radio dial to 20 M. C. and adjust trimmer "D" on modulate coil slowly rocking main tuning dial to 9 M. C. (Band D or No. 3) and adjust padding condensers "DP" to resonance. Then reset both service oscillator and radio dial to 20 M. C. and recheck to resonance, this completes alignment of Band D.

Note: When making adjustments of modulator trimmers on all models and particularly the highest frequency bands, loosening of the modulator trimmer too far may cause a false resonance indication caused by the oscillator curve being "crossed over" removing oscillator lead or changing oscillator frequency will readily show if this has occurred as no change in resonance indication will be apparent also the set will be quite dead at the high frequency end of the band, the true resonance point is with the modulator screwed in about one turn or less from the point where blocking occurs. The true resonant point will be quite apparent on resonance indicating devices.

"X" BAND OR NO. 5

(For models equipped with long wave weather band only.)

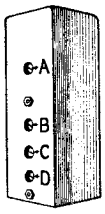

FIG. 8

Set band change switch to "X" band. Set both service oscillator and radio dial to 400 Kc., adjust trimmer "XOT" to resonance. Then adjust trimmers "XAT," "XRT," and "XMT" each in turn to resonance. Then set both service oscillator and radio dial to 150 Kc. and adjust padding condenser "XP" (very slowly) to resonance. Reset both service oscillator and radio dial to 400 Kc. and recheck trimmer "XOT" to resonance. This completes all alignment.

Cathode Ray Oscilloscope Alignment

For the service man who is equipped with a cathode ray oscilloscope and rotary sweep circuit, a very accurate alignment of the intermediate amplifier is possible. Owners of such equipment are usually familiar with the necessary procedure as this point is usually covered thoroughly in the instructions furnished with the equipment. More detailed information than that usually furnished with cathode ray equipment may be found in John Rider's book, "The Cathode Ray Tube at Work." An I. F. output connection intended for cathode ray alignment is incorporated in all Patterson 37 models. With chassis upside down and facing back of chassis it will be found in the lower left hand corner of chassis adjacent to the phono terminals and rubber corner rest. In the 8 and 10 tube models the adjustments should be made on the second stage first, then the first stage, then through the modulator and first I. F. transformer or practically the same procedure as when aligning by any other method. The curve on the 8 and 10 should be round nosed and about 10 Kc. wide at the summit. The high fidelity switch having no effect on the resonant curve in these models. In the 12 tube model the above procedure should be followed out with the exception that the high fidelity switch must be in the "off" position during alignment.

In this model the I. F. curve will be very sharp and not round nosed, after alignment has been completed the high fidelity switch may be turned on for a check, in which position the curve will remain symetrical but become very broad with possibly a very slight shift in the I. F. frequency in some cases. If this is not the case, a misadjustment has been made in the alignment procedure and the high fidelity switch should be turned off and alignment rechecked as before.

OPERATION OF PHONO COMBINATION MODELS

The following instructions are for models equipped with phono-pickup and motor. To place phonograph in operation turn radio on in usual manner with top cover raised. Turn toggle switch on top panel to position marked "Phono." Start motor by pulling lever extending from under turn table on right hand side forward. Lift pick up and pass over turn table toward the center of turn table, adjusting stop lever located between turn table and pickup hinge until motor turns off at a point just past when the last grooves in record stop, not including the stop grooves, which are elliptical. This point may vary with individual records while some records have no stop grooves at all. The best position for stop lever can easily be determined, however, after a few records have been tried. The speed control is located on the left hand side extending from under the turn table and is clearly marked. Use that speed which gives the best or most natural results. This speed is ordinarily 78 revolutions per minute for fast records, stroboscopes for various speeds and line frequency may be purchased for very small cost, which make it possible to obtain the exact speed. These stroboscopes are self explanatory. On those models equipped with two speed motors a third lever extends from under the turn table on which speeds are plainly marked, one being 78 R.P.M., the other 33⅓ R.P.M. for slow speed records. The usual volume and tone controls are still in service and may be used at will while playing records.

VOLTAGES

The following tables show characteristic voltages at various points through a normal chassis.

All Voltages Measurable Under The Following Conditions:

Transformer line tap in 110-115 V. position line voltage 115 V. 60 cycles. Band change switch set on Band No. 2. No antenna. No signal being received sensitivity adjustment set at maximum position. All voltages listed measured from point indicated to chassis (ground), all readings taken on standard 1000 ohm per volt. Voltmeter.

8 TUBE CHASSIS

		Plate	Screen	Cathode	Suppressor
RF	6K7	200 V. App.	90 V. App.	2 V. App.	Tied to Cathode
Osc.	6A8	90 V. App.		2.5 V. App.	
Mod.	6A8	200 V. App.	90 V. App.		
1 IF	6K7	200 V. App.	90 V. App.	2 V. App.	Tied to Cathode
2 IF	6K7	200 V. App.	90 V. App.	2 V. App.	Tied to Cathode
Det.	6Q7				
Audio		*50 V. App.		0 V. App.	
Output	6F6	200 V. App.	200 V. App.	15 V. App.	
EYE	6G5	Target-200 V.		0 V. App.	
Rect.	5x3G	**Plate No. 1—350 V.	AC Plate No. 2—350 V. AC		

**Measurable with AC Voltmeter only.*
**Not actual, (measured through 500,000 ohms).*

1st filter 360 V. App.
2nd filter 200 V. App.

10 TUBE CHASSIS

		Plate	Screen	Cathode	Suppressor
RF	6K7	235 V. App.	90 V. App.	2.5 V. App.	Tied to Cathode
Osc.	6K7	80 V. App.	235 V. App.	0 V. App.	Tied to Cathode
Mod.	6L7	235 V. App.	90 V. App.	3 V. App.	Tied to Cathode
1 IF	6K7	235 V. App.	90 V. App.	2.5 V. App.	Tied to Cathode
2 IF	6K7	235 V. App.	90 V. App.	2.5 V. App.	Tied to Cathode
Det.	6Q7	55 V. App.		0 V. App.	
Audio	6Q7	55 V. App.			
Output	6F6	235 V. App.	235 V. App.	18 V. App.	
Output	6F6	235 V. App.	235 V. App.	18 V. App.	
EYE	6G5	235 V. App.		0 V. App.	
Rect.	5x3G	Plate No. 1—350 V. AC.	Plate No. 2—350 V. AC.		

**Not actual, (measured through 500,000 ohms).*
***Measured only with AC Voltmeter.*

1st Filter Cond. 325 V. DC
2nd Filter Cond. 250 V. DC

12 TUBE CHASSIS

		Plate	Screen	Cathode	Suppressor
RF	6K7	250 V. App.	110 V. App.	2.5 V. App.	Tied to Cathode
RF	6K7	250 V. App.	110 V. App.	2.5 V. App.	Tied to Cathode
Osc.	6K7	250 V. App.	110 V. App.	0 V. App.	Tied to Cathode
Mod.	6L7	250 V. App.	110 V. App.	3 V. App.	Tied to Cathode
1 IF	6K7	250 V. App.	110 V. App.	2.5 V. App.	Tied to Cathode
2 IF	6K7	250 V. App.	110 V. App.	2.5 V. App.	Tied to Cathode
Det.	6Q7				
Audio	6Q7	***90 V. App.		0 V. App.	
Output	6F6	325 V. App.	250 V. App.	20 V. App.	
Output	6F6	325 V. App.	250 V. App.	20 V. App.	
B. Osc.	6C5	*50 V. App.		0 V. App.	
EYE	6G5	Target	250 V. App.	0 V. App.	
Rect.	5x4G	**Plate No. 1—330 V. AC.	Plate No. 2—330 V. AC.		

**Measurable with beat oscillator switch turned on.*
***Measurable only with AC Voltmeter.*
****Not actual, (measured through 500,000 ohms).*

1st Filter Cond. 350 V. App.
2nd Filter Cond. 235 V. App.

©John F. Rider, Publisher

PHILCO RADIO & TELEV. CORP.

MODEL 38-15(121,124)
Schematic, Socket
Trimmers, Voltage
Coils, Layout

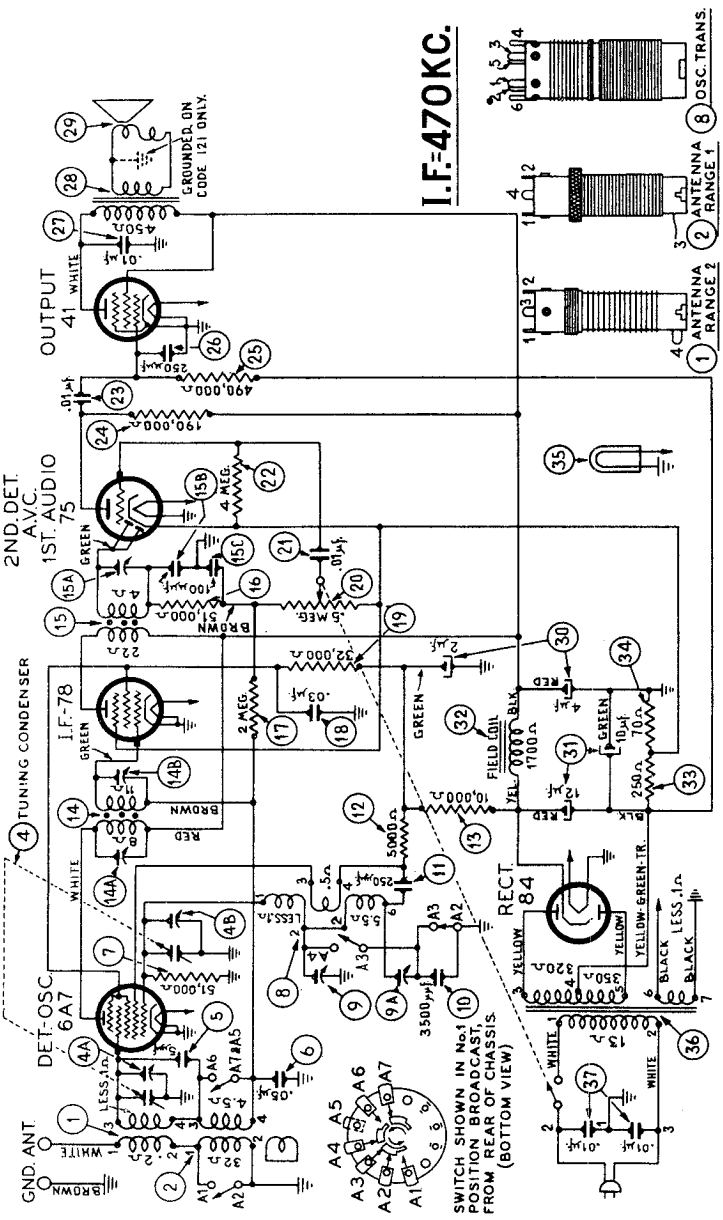

Fig. 4.—Schematic Diagram, Model 38-15

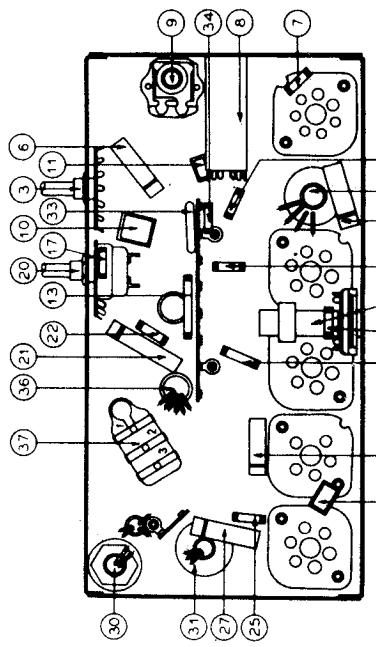

Fig. 5.—Part Locations Underside of Chassis

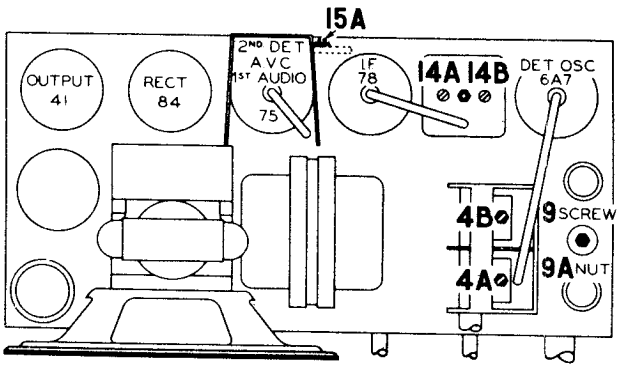

Fig. 2.—Locations of Compensators

IF PEAK 470KC

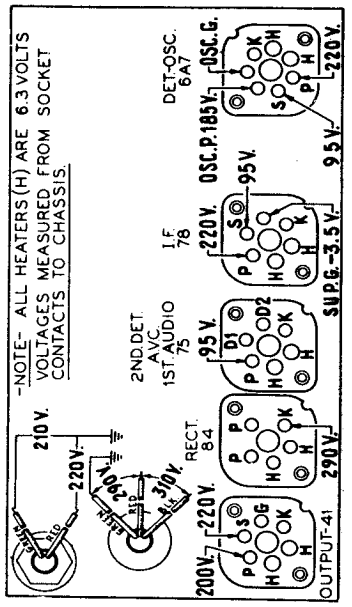

Fig. 1. Socket Voltages, Underside of Chassis View

The Voltages indicated by arrows were measured with a Philco 026 Circuit Tester which contains a sensitive voltmeter. Volume Control at minimum—Tuning condenser set for no signal—line voltage 115 A.C.

©John F. Rider, Publisher

MODEL 38-15(121,124)
Alignment, Specs.
Parts

PHILCO RADIO & TELEV. CORP.

EQUIPMENT REQUIRED: (1) Signal Generator, using a fundamental frequency range covering the tuning and intermediate frequencies of the receiver. Philco Model 077 Signal Generator which has a fundamental frequency range from 115 to 36,000 K.C. is the correct instrument for this purpose; (2) Output Meter, Philco Model 026 Circuit Tester incorporates a sensitive output meter and is recommended; (3) Philco Fibre Handle Screw Driver, Part No. 27-7059 and Fibre Wrench, Part No. 3164.

DIAL CALIBRATION: In order to adjust the receiver correctly the dial must be aligned to track properly with the tuning condenser. To adjust the dial, proceed as follows:

1. Turn the tuning condenser to maximum capacity position (plates fully meshed).

2. Holding the tuning condenser in this position, turn the pointer until it is in the position shown in Fig. 3. This is the correct position of pointer at maximum capacity of tuning condenser.

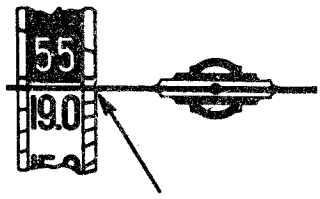

FIG.3—Dial Pointer Calibration

Intermediate Frequency Circuit

Insert the signal generator shielded output lead into the "Med." jack on the panel of the generator. Connect the other end of the output lead through a .1 mfd. condenser to the grid of the 6A7 Det. Osc. tube, and the ground connection of the signal generator to the chassis. Set the Signal Generator and receiver controls, and adjust the I.F. compensators as follows:

1. Set Signal Generator at 470 K.C. Turn "Multiplier" Control to 1000 and the "Attentuator" for maximum output.
2. Turn the receiver dial to 580 K.C.
3. Receiver volume control maximum.
4. Range Switch (Broadcast)
5. Adjust compensators, (15A), (14B), (14A), for maximum output. If the output meter goes off scale when adjusting the compensators, retard the signal generator attenuator.

Radio Frequency Circuit

Tuning Range 5.7 to 18.0 M.C.

1. With one end of the shielded lead of the signal generator output lead in the "Med" jack, connect the other end through a 400 ohm resistor to the white aerial wire (rear of chassis). Connect the signal generator ground to the brown lead or to the chassis of the receiver.

2. Set the controls and adjust the R.F. compensators as follows:

Range Switch Position	Signal Generator and Receiver Dial	R. F. Compensators in Order
Short Wave	18.0 M.C.	(4B)

Tuning Range 530 to 1720 K.C.

1. Remove the 400 ohm resistor from aerial lead and replace with a 100 mmfd condenser.

2. Set the controls and adjust the R.F. compensators as follows:

Range Switch Position	Signal Generator and Receiver Dial	R. F. Compensators in Order
Broadcast	1550 K.C.	(9), (4A)
	580 K.C.	(9A) Roll tuning condenser
	1550 K.C.	(9), (4A)

OUTPUT METER: The 026 Output Meter is connected to the plate and cathode terminals of the 41 tube. Adjust the meter to use the (0-30) volt scale and advance the attenuator control of the generator until a readable indication is noted on the output meter after signal is applied.

Specifications

TYPE OF CIRCUIT: A.C. operated, Superheterodyne circuit, incorporating two tuning ranges covering standard and short wave broadcasts, automatic volume control, and a pentode audio output circuit. When built into a Type "T" cabinet, the receiver is identified as Code 121. In the Chairside Cabinet, Type "CS", the speaker is removed from the receiver chassis and mounted in the cabinet. The receiver is then identified as Code 124.

POWER SUPPLY:

Voltage	Frequency Cycles	Power Consumption
115	50 to 60	40 watts

INTERMEDIATE FREQUENCY: 470 K.C.

R.F. TUNING RANGES: 540 to 1720 K.C.
5.7 to 18.0 M.C.

AUDIO OUTPUT: 2 watts

PHILCO TUBES USED: Five: One 6A7, Det. Osc.; One 78, I.F.; One 75, 2nd Det., 1st Audio; One 41, Output, and One 84, Rectifier.

TUNING MECHANISM: 8 to 1 Ratio using Pulley and Cord.

CABINET: Type "T" and "CS"

Replacement Parts
Model 38-15, Code 121, 124

Schem. No.	Description	Part No.	List Price
1	Ant. Trans. (Range 2)	32-2821	
2	Ant. Trans. (Range 1)	32-2822	
3	Range Switch	42-1366	$0.70
4	Tuning Condenser Assembly	31-2065	4.00
5	Condenser (5 μμf, mica)	30-1067	.20
6	Condenser (.05 μf, tubular)	30-4519	.20
7	Resistor (51000 Ω, ½ W.)	33-351339	.20
8	Osc. Trans. (Range 1 and 2)	32-2823	
9	Compensator	31-6100	.40
10	Condenser (350 μμf, mica)	30-1094	.40
11	Condenser (250 μμf, mica)	30-1032	.25
12	Resistor (5000 Ω, ½ W.)	33-250339	.20
13	Resistor (10,000 Ω, 1 W.)	33-310439	.20
14	1st. I. F. Trans.	32-2672	2.20
15	2nd. I. F. Trans.	32-2674	1.50
16	Resistor (51,000 Ω, ½ W.)	33-351339	.20
17	Resistor (2 Meg., ½ W.)	33-520339	.20
18	Condenser (.03 μf, tubular)	30-4449	.20
19	Resistor (32,000 Ω, ½ W.)	33-332339	.20
20	Volume Control & Power Switch	33-5230	1.45
21	Condenser (.01 mfd., tubular)	30-4514	.20
22	Resistor (4 meg., ½ W.)	33-540339	.20
23	Condenser (.01 μf, tubular)	30-4514	.20
24	Resistor (190,000 Ω, ½ W.)	33-419339	.20
25	Resistor (490,000 Ω, ½ W.)	33-449339	.20
26	Condenser (250 μμf, mica)	30-1032	.25
27	Condenser (.01 μf, tubular)	30-4109	.20
28	Output Trans. Code 121 (B01 Speaker). Output Trans. Code 124 (S19 Speaker)	32-7561 32-7019	
29	Cone & Voice Coil Assembly, Code 121 (B01 Speaker) Cone & Voice Coil Assembly, Code 124 (S19 Speaker)	36-3981 36-3014	
30	Electrolytic Condenser (2-4 mfd.)	30-2265	
31	Electrolytic Condenser (10-12 μf.)	30-2263	
32	*Speaker Field Code 121 (B01) See Note Speaker Field Assembly, Code 124, (S19 Speaker)	36-3987	
33	Resistor (250 Ω, 1 W.)	33-1259	.20
34	Resistor (70 Ω)	33-070339	.20
35	Pilot Lamp	34-2064	.20
36	Power Trans. (115 V., 50 to 60 cycle)	32-7826	3.00
37	Condenser (.01-.01 μf, Bakelite) Bakelite)	3903-DG	.30
	Bezel & Glass Assembly (Code 121)	3903-0 DG	.30
	Bezel & Glass Assembly (Code 124)	40-6158	1.20
	Bezel Clamp	40-6264	
	Cable (Power, Code 121)	28-5153	.02
	Cable (Power Code 124)	L2778	.40
	Clip, Small (R. F. Trans.)	L2985	
	Clip, Large (R. F. Trans.)	28-5002	.02
	Dial Assembly	28-5003	.03
		31-2137	
	Dial Pointer	28-5201	$0.20
	Dial Drive Cord	31-2066	.10
	Dial Drive Shaft	38-9001	
	Knob	27-4604	.10
	Mtg. Rubber (Dial)	27-4150	.01
	Mtg. Rubber (Tuning Condenser)	27-4596	
	Pulley (Tuning Condenser)	31-1283	.30
	Shield (Tube)	28-5039	.05
	Speaker (B01, Code 121)	36-1366	
	Speaker (S19, Code 124)	36-1382	
	Socket Assembly (Pilot Lamp)	38-9041	.35
	Socket (6 Prong)	27-6036	.11
	Socket (7 Prong)	27-6037	.11
	Socket (5 Prong)	27-6035	.11

* Speaker must be replaced when field is open or shorted.

©John F. Rider, Publisher

©John F. Rider, Publisher

Replacement Parts

Schem. No.	Description	Part No.	List Price
1	Resistor (20,000 ohms, ½ watt)	33-320339	$0.20
2	Condenser (25 mmf mica)	30-1067	.20
3	Ant. Transformer	32-2212	1.60
4	Tuning Condenser Assembly	31-2100	
5	Resistor (51,000 ohms, ½ watt)	33-351339	.20
6	Condenser .05 mf tubular	30-4444	.20
7	Osc. Transformer	32-2213	.70
8	Low Frequency Padder	31-6186	.30
9	Condenser (.001 mf tubular)	30-4453	.20
10	Resistor (10,000 ohms, ½ watt)	33-310339	.20
11	1st I. F. Transformer	32-2841	
12	2nd I. F. Transformer	32-2795	
13	Condenser (.1 mf tubular)	30-4499	.20
14	Condenser (Electrolytic 3.0 mf.)	30-2158	.90
15	Condenser (110 mmf mica)	30-1031	.20
16	Condenser (110 mmf mica)	30-1031	.20
17	Resistor (1.0 meg. ½ watt)	30-510339	.20
18	Resistor (1.0 meg. ½ watt)	30-510339	.20
19	Resistor (1.0 meg. ½ watt)	30-510339	.20
20	Resistor (8000 ohms, ½ watt)	30-280339	.20
21	Condenser (.015 mf Bakelite)	3793SU	.35
22	Volume Control—Power Switch	33-5249	
23	Condenser (.015 mf Bakelite)	3793SU	.35
24	Condenser (110 mmf mica)	30-1031	.20
25	Resistor (1.0 meg. ½ watt)	33-510339	.20
26	Condenser (.015 mf Bakelite)	3793SU	.35
27	Resistor (490,000 ohms, ½ watt)	33-449339	.20
28	Resistor (160,000 ohms, ½ watt)	33-416339	.20
29	Resistor (490,000 ohms, ½ watt)	33-449339	.20
30	Condenser (.25 mf tubular)	30-4446	.25
31	Condenser (.004 mf tubular)	30-4456	.20
32	Output transformer (KR26 speaker)	32-7758	
33	Cone & Voice Coil Assembly (KR26 Speaker)	36-3540	
34	Condenser (.004 mf tubular)	30-4456	.20
35	Resistor (1.0 meg., ½ watt)	33-510339	.20
36	Resistor (1500 ohm, ½ watt)	33-215339	.20
37	Pilot Lamp	34-2150	.22
38	Speaker L3 "B" Cabinets	36-1359	
39	Cone Assembly L3 Speaker	45-2554-1	
	Bezel Window	27-5348	
	Bezel Throat	27-5248	.50
	Cable (Battery)	41-3203	
	Cable (Speaker)	41-3326	
	Dial Assembly	31-2107	
	Dial Pointer	28-5201	.20
	Dial Bracket	28-5225	
	Dial Drive Cord	31-2086	
	Dial Drive Spring	28-8751	

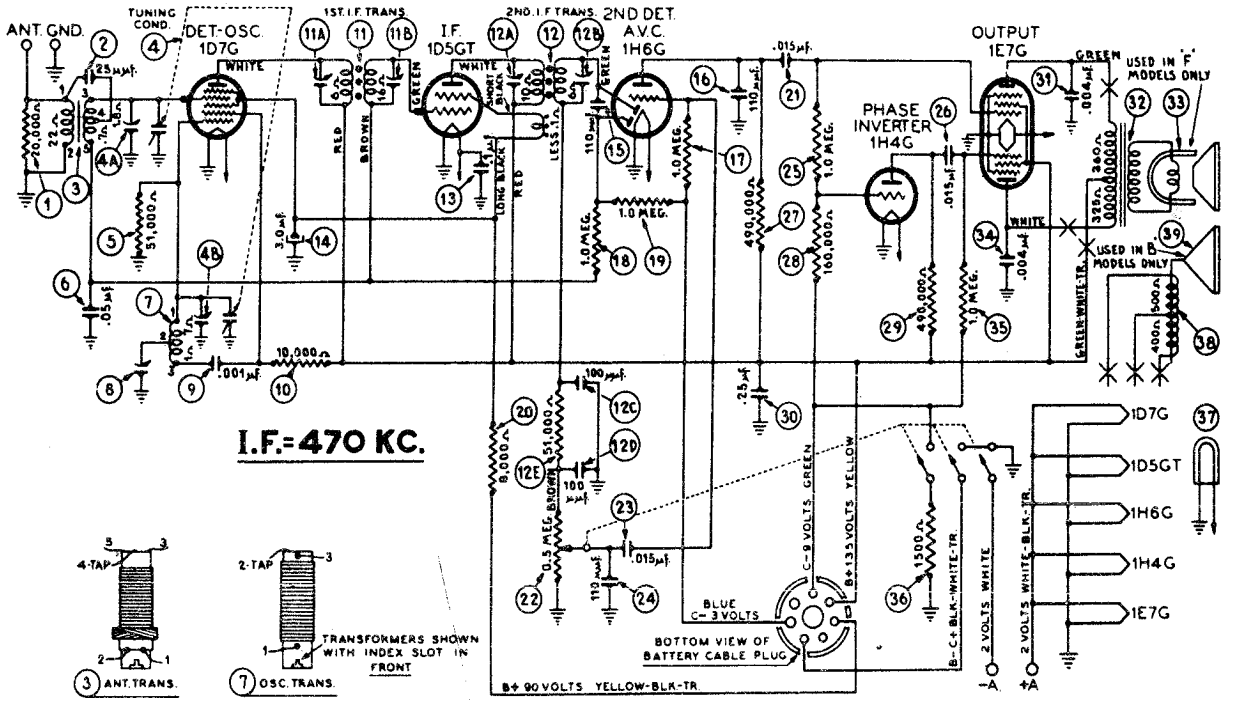

Fig. 4. Schematic Diagram, Model 38-33, Code 121

Schem. No.	Description	Part No.	List Price
	Dial Drive Drum	28-6662	
	Dial Drive Tuning Shaft	38-9107	
	Knob	27-4321	$0.10
	Pilot Lamp Assembly	38-9121	
	Shield (Tube)	28-2726	.10
	Shield Base (Tube)	28-2725	.03
	Socket 6 prong	27-6086	.11
	Socket 7 prong	27-6087	.11
	Terminal Strip (R. F. Coils)	38-7963	
	Speaker, L3 (B Cabinet)	36-1359-1	
	Speaker (F Cabinet, KR26)	36-1353	10.00

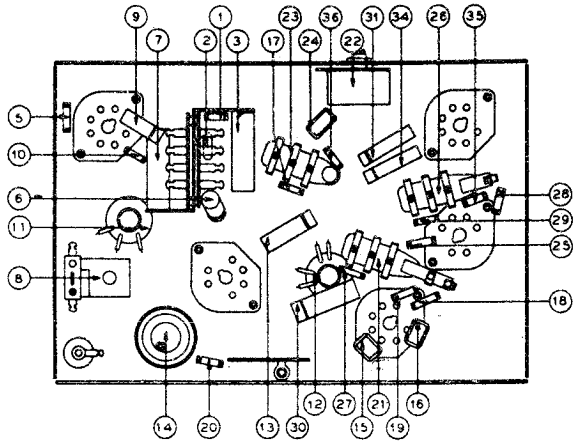

Fig. 5. Part locations, Underside of Chassis

PRICES SUBJECT TO CHANGE
WITHOUT NOTICE

MODEL 38-33(121)
Socket,Trimmers
Alignment,Notes
Voltage

PHILCO RADIO & TELEV. CORP.

Electrical Specifications

TYPE OF CIRCUIT: Five tube, battery operated superheterodyne circuit covering broadcast frequencies and incorporating Automatic Volume Control and a Push-Pull output stage.

INTERMEDIATE FREQUENCY: 470 K. C.

TUNING RANGE: 530 to 1720 K. C.

POWER OUTPUT: 1 watt

TYPE AERIAL: "L" type, Philco Part No. 45-2428

CABINETS AND SPEAKERS USED:	Cabinet Type	Speaker Used
	B	L3
	F	KR26

BATTERIES REQUIRED: "A" Battery: Two volt storage battery Philco type 172R or Dry "A" battery Philco Part No. 41-8011. If a dry A Battery is used, a ballast lamp "type 1Y1" MUST be inserted in the socket provided in the (41-8011) battery. This lamp acts as a voltage regulator and maintains a constant potential of two volts on the filament of the tubes.

"BC" Battery: Philco battery Part No. 41-8007 is used to supply "B" and "C" voltages. This battery contains a socket into which the receiver battery cable plug is inserted.

Copyright 1937 Philco Radio & Television Corporation

Fig. 2. Locations of Compensators—Top of Chassis

Fig. 1. Socket Voltages, Underside of Chassis

The voltages indicated by arrows were measured with a **Philco 026 Circuit Tester** which contains a sensitive voltmeter. Volume control at minimum.

Alignment of Compensators

EQUIPMENT REQUIRED: (1) Signal Generator, having a fundamental frequency range covering the tuning and intermediate frequencies of the receiver. Philco Model 077 A.C. operated Signal Generator or Model 088, battery operated Signal Generator which have the required frequency range are the correct instruments for this purpose: (2) Output meter, Philco Model 026 circuit tester incorporates a sensitive output meter and is recommended; (3) Philco Fibre Handle Screw Driver, Part No. 27-7059 and Fibre Wrench, Part No. 3164.

OUTPUT METER: The 026 Output Meter is connected to the plate terminals of the 1E7G tube. Adjust the meter to use the (0-30) volt scale and advance the attenuator control of the generator until a readable indication is noted on the output meter after signal is applied.

DIAL CALIBRATION: In order to adjust the receiver correctly the dial must be aligned to track properly with the tuning condenser. To adjust the dial proceed as follows:

1. Turn the tuning condenser to maximum capacity position (plates fully meshed).
2. Holding the tuning condenser in this position, turn the dial pointer until it is parallel with the INDEX LINE See Fig. (3). This is the correct position of pointer at the maximum capacity position.

INTERMEDIATE FREQUENCY CIRCUIT

Insert the signal generator shielded output lead into the "Med" jack on the panel of the generator. Connect the other end of the output lead through a 1. mfd. condenser to the grid of the 1D7G Det. Osc. tube and the ground connection of the signal generator to the chassis. Set the signal generator and receiver controls and adjust the I.F. compensators as follows:

1. Set Signal Generator at 470 K.C. Turn "Multiplier" Control to 1000 and adjust the attenuator for a readable indication on the output meter.

Fig. 3. Dial Calibration. Set pointer as shown

2. Turn the receiver dial to 580 K.C.
3. Receiver Volume Control maximum
4. Adjust compensators (12B), (12A), (11B), (11A) for maximum output.

If the output meter goes off scale when adjusting the compensators retard signal generator "attenuator."

RADIO FREQUENCY CIRCUIT

Tuning Range: 530 to 1720 K. C.

1. With one end of the shielded lead of the signal generator output cable in the "Med" jack, connect the other end through a 200 mmfd. condenser to the "Ant." terminal of the aerial panel of the receiver. The output lead ground must be connected to the "Gnd" terminal or to the chassis.
2. Set the controls and adjust the R.F. compensators as follows:

Volume Control	Signal Generator and Receiver Dial	Compensators in Order
Max.	1500 K. C.	(4B), (4A)
Max.	580 K. C.	(8)
Max.	1500 K. C.	(4B), (4A)

©John F. Rider, Publisher

©John F. Rider, Publisher

Replacement Parts
Model 38-34, Code 125

Schem. No.	Description	Part No.	List Price
1	Condenser (25 mmf. mica)	30-1067	$0.20
2	Resistor (20,000 ohms, ½ watt)	33-320339	.20
3	Ant. Transformer	32-2212	1.60
4	Tuning Condenser Assembly	31-2100	
5	Osc. Transformer	32-2213	.70
6	Resistor (51,000 ohms, ½ watt)	33-351339	.20
7	Compensator	31-6186	.30
8	Condenser (.001 mf. tubular)	30-4453	.20
9	Resistor (25,000 ohms, ½ watt)	33-325339	.20
10	Resistor (10,000 ohms, ½ watt)	33-310339	.20
11	Pilot Lamp Bulb	34-2150	.22
12	Condenser (.05 mf.—.05 mf. tubular)	30-4522	.35
13	Resistor (11 ohms, ½ watt, wire wound)	33-1264	.20
14	Resistor (200 ohms, 1 watt wire wound)	33-1244	
15	1st I. F. Transformer	32-2841	2.20
16	2nd I. F. Transformer	32-2795	3.00
17	Resistor (51,000 ohms, ½ watt, Part of 16)	33-351339	.20
18	Condenser (.1 mf. tubular)	30-4499	.20
19	Condenser (.1 mf. tubular)	30-4499	.20
20	Resistor (1.0 meg. ½ watt)	30-510339	.20
21	Power Switch & Volume Control	33-5237	
22	Condenser (110 mmf. mica)	30-1031	.20
23	Condenser (.015 mf. tubular)	30-4358	.20
24	Resistor (2.0 meg., ½ watt)	33-520339	.20
25	Resistor (8.3 ohms, ½ watt wire wound)	33-1268	.20
26	Resistor (8.3 ohms, ½ watt, wire wound)	33-1268	.20
27	Condenser (250 mmf. mica)	30-1032	.25
28	Condenser (.015 mf. tubular)	30-4515	.20
29	Resistor (490,000 ohms, ½ watt)	33-449339	.20
30	Resistor (1.0 meg., 3 watt)	33-510339	.20
31	Resistor (160,000 ohms, 3 watt)	33-416339	.20
32	Condenser (.25 mf. tubular)	30-4446	.25
33	Resistor (32,000 ohms, ½ watt)	33-332339	.20
34	Bias Cell (3 used)	41-8009	
35	Condenser (.015 mf. bakelite)	3793SU	.35
36	Resistor (490,000 ohms, ½ watt)	33-449339	.20
37	Resistor (1.0 meg., ½ watt)	33-510339	.20
38	Condenser (.004 mf.—.004 mf. bakelite)	8324DU	
39	Cone Assembly (L3 Speaker)	45-2554-1	
40	Output Transformer (KR26 Speaker)	32-7758	1.50
41	Cone & Voice Coil Assembly (KR26 Speaker)	36-3540	1.00
42	Condenser (4 mf.—8 mf.—Electrolytic)	30-2160	2.00
43	Choke	32-7543	1.35
44	6 volt Storage Battery	116R	
45	Condenser (250 mmf. mica)	30-1032	.25
46	Condenser (.5 mf.)	30-4296	.60
47	Choke "B"	32-1932	.25
48	Choke "A"	32-1954	.40
49	Condenser (.5 mf.)	30-4296	.60
50	Condenser (.5 mf.)	30-4296	.60
51	Condenser (.01 mf. tubular)	30-4381	.25
52	Power Transformer	32-7682	2.20
53	Vibrator	41-3222	5.25
	Bias Cell Panel Ass'y	38-9104	
	Cable (Speaker)	41-3326	.40
	Cable (Battery)	41-3204	1.20
	Dial Assembly	31-2107	.20
	Dial Drive Cord	31-2086	.08

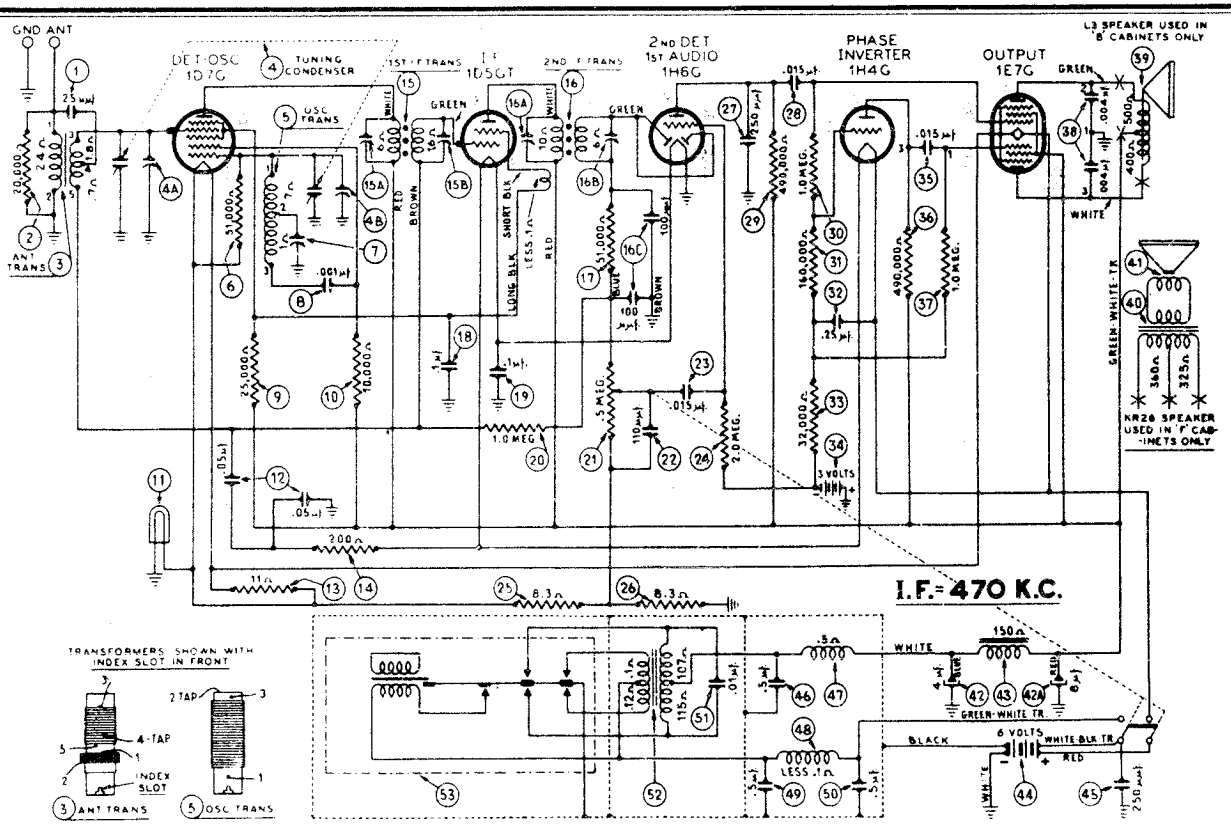

Fig. 4. Schematic Diagram—Model 38-34, Code 125

Schem. No.	Description	Part No.	List Price
	Drum	28-6662	$0.20
	Mtg. Rubber—Small (Vibrator Assembly)	27-4307	C 1.20
	Mtg. Rubber—Large (Vibrator Assembly)	3914	.02
	Mtg. Rubber—Square (Vibrator)	27-4287	.05
	Pointer (Dial)	28-5201	.20
	Shaft Assembly (Tuning)	38-9107	.15
	Shield Assembly (Vibrator)	38-8022	.25
	Socket (6 prong)	27-6086	.11
	Socket (7 prong)	27-6087	.11
	Socket Assembly (Pilot Lamp)	38-9120	
	Socket (Vibrator)	27-6036	.11
	Spring (Drive Cord)	28-8751	.05
	Speaker (KR26)	36-1353	10.00
	Speaker (L3)	36-1359	6.50
	Washer & Spacer (Mtg. Vibrator Assembly)	40-6288	
	Washer (Mtg. Vibrator unit)	5189	.03
	Bezel Window	27-5348	.20
	Bezel Throat	28-5248	.20

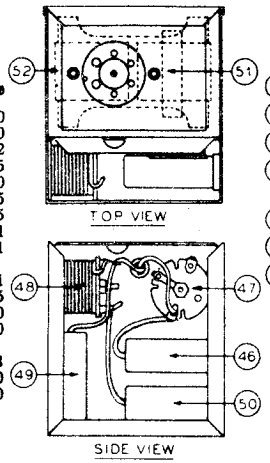

Fig. 5. Vibrator Part Locations

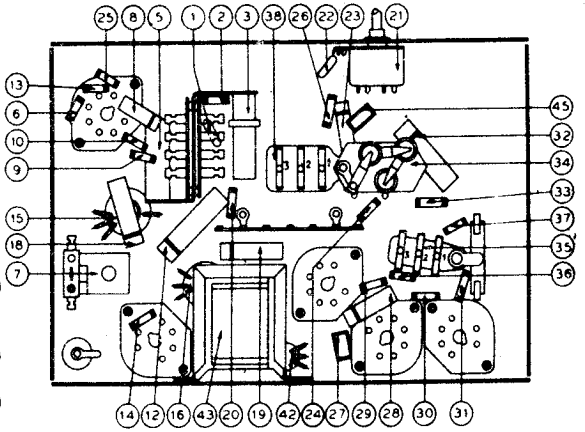

Fig. 6. Part Locations Underside of Chassis

MODEL 38-34(125)
Socket,Trimmers
Alignment,Specs.
Voltage

PHILCO RADIO & TELEV. CORP.

SPECIFICATIONS

The receiver is designed to operate from a standard "L" type aerial Philco part No. 45-2428. This aerial system should be used to obtain the maximum performance from the receiver.

POWER SUPPLY: 6 volt storage battery-Philco type 116R
Current drain: 1.2 amps.

INTERMEDIATE FREQUENCY: 470 K. C.

TUNING RANGE: 530 to 1720 K. C.

OUTPUT: 1 watt

SPEAKERS USED: "B" Cabinet L-3.
"F" Cabinet KR26.

TYPE OF CIRCUIT: A Five tube superheterodyne circuit covering standard broadcast and state police frequencies is used in this model. The receiver is operated by a 6 volt storage battery and uses a synchronous vibrator for supplying "B" voltage. The vibrator power unit in the type "B" cabinet is mounted on the chassis. In the type "F" cabinet the vibrator power unit is mounted under the chassis shelf and connected to the receiver through a cable and plug. Additional design features included in this model are: Automatic Volume Control; two point tone control and Pushpull Pentode Audio Output Circuit.

Alignment of Compensators

EQUIPMENT REQUIRED: (1) Signal Generator, having a fundamental frequency range covering the tuning and intermediate frequencies of the receiver. Philco Model 077 A.C. operated Signal Generator or Model 088, battery operated Signal Generator which have the required frequency range are the correct instruments for this purpose; (2) Output meter, Philco Model 026 circuit tester incorporates a sensitive output meter and is recommended; (3) Philco Fibre Handle Screw Driver, Part No. 27-7059 and Fibre Wrench, Part No. 3164.

OUTPUT METER: The 026 Output Meter is connected to the plate terminals of the 1E7G tube. Adjust the meter to use the (0-30) volt scale and advance the attentuator control of the generator until a readable indication is noted on the output meter after signal is applied.

Operations In Order	Signal Generator			Receiver			Special Instructions
	Output Connections To Receiver	Dummy Antenna (Note B)	Dial Setting	Dial Setting	Control Settings	Adjust Compensators In Order	
1	Grid Cap 1D7G Det. Osc.	.1 mfd.	470 K. C.	580 K. C.	Vol. Cont. (max.)	(15B), (15A) (16B), (16A)	
2	Ant. Ter.	200 mmfd.	1500 K. C.	1500 K. C.	"	(4B), (4A)	Note C Dial Calibration
3	Ant. Ter.	200 mmfd.	580 K. C.	580 K. C.	"	(7)	Roll Tuning Condenser Note A
4	Ant. Ter.	200 mmfd.	1500 K. C.	1500 K. C.	"	(4B), (4A)	

NOTE "A"—First adjust compensator for maximum output, then vary the tuning condenser for maximum output. Now turn the compensator slightly to the right or left and again adjust tuning condenser for maximum output.
This procedure of first setting the compensator and then varying the tuning condenser is continued until there is no further gain in the output meter reading.

NOTE "B"—The "Dummy Antenna" consists of a condenser connected in series with the signal generator output lead (High side). Use the capacity as specified in each step of the above procedure.

NOTE "C"—DIAL CALIBRATION: In order to adjust the receiver correctly the dial must be aligned to track properly with the tuning condenser. To adjust the dial proceed as follows:

1. Turn the tuning condenser to maximum capacity position (plates fully meshed).
2. Holding the tuning condenser in this position, turn the dial pointer until it is parallel with the INDEX LINE. See Fig. (3). This is the correct position of pointer at the maximum capacity position.

Fig. 3. Dial Calibration. Set pointer as shown

Copyright 1937 Philco Radio & Television Corporation

Fig. 1. Socket Voltages, Underside of Chassis

The voltages indicated by arrows were measured with a Philco 026 Circuit Tester which contains a sensitive voltmeter. Volume control at minimum.

Fig. 2. Locations of Compensators

©John F. Rider, Publisher

©John F. Rider, Publisher

Replacement Parts
Model 38-35, Code 121

Schem. No.	Description	Part No.	List Price
1	Resistor 20,000 Ω ½ watt	33-320339	$0.20
2	Condenser 25 μμf mica	30-1067	.20
3	Ant. Transformer	32-2212	1.60
4	Condenser .05 μf., tubular	30-4518	.20
5	Resistor 51,000 Ω ½ watt	33-351339	.20
6	Osc. Transformer	32-2213	.70
7	Condenser .001 μf., tubular	30-4453	.20
8	Resistor (10,000 Ω ½ watt)	33-310339	.20
9	Tuning Condenser	31-2100	
9X	Compensator	31-6186	.30
10	1st. I. F. Transformer	32-2852	
11	2nd. I. F. Transformer	32-2854	
12	Condenser (110 μμf. mica)	30-1031	.20
13	Resistor (51,000 Ω ½ watt) (Part of 11)	33-351339	.20
14	Condenser (.05 μf. tubular	30-4444	.20
15	Resistor (25,000 Ω ½ watt)	33-325339	.20
16	Power Switch & Volume Control	33-5253	
17	Resistor (1.0 Meg. ½ watt)	33-510339	.20
18	Resistor (1.0 Meg. ½ watt)	33-510339	.20
19	Condenser (12 μf.—8 μf.)	30-2270	
20	Choke Coil	32-7038	1.15
21	Condenser (.01 μf., tubular)	30-4514	.20
22	Condenser (250 μμf. mica)	30-1032	.25
23	Condenser (.01 μf., tubular)	30-4169	.20
24	Output Transformer	32-7936	
25	Cone & Voice Coil Assembly	36-3540	1.00
26	Resistor (190,000 Ω ½ watt)	33-419339	.20
27	Resistor (490,000 Ω ½ watt)	33-449339	.20
28	Condenser (.01 μf., tubular)	30-4479	.20
29	Resistor (99,000 Ω ½ watt)	33-399339	.20
30	Condenser (.01 μf., tubular)	30-4479	.20
31	Resistor (4.0 meg., ½ watt)	33-540339	.20
32	Resistor (300 Ω, 1 watt)	33-1214	.20
33	Resistor (70 Ω, ½ watt)	33-070339	.20
34	"A" Choke	32-2269	.20
35	"A" Choke	32-2269	.20
36	Condenser (.5 mfd., tubular)	30-4229	.80
37	Condenser (.05—.05 μf., Bakelite)	3615DG	.40
38	"B" Choke	32-2836	
39	"A" Choke	32-1984	.90
40	Condenser (.02 μf., tubular)	30-4481	.20
41	Condenser (.5 μf.—Metal Housing)	30-4296	.60
42	"B" Choke (Part of 38)		
43	Condenser (.015 μf., tubular)	30-4552	
44	Power Transformer	32-7934	
45	Condenser (.02 μf., tubular)	30-4481	.20
46	Condenser (.5 mfd., tubular)	30-4551	
47	Vibrator	41-3367	
48	Voltage Selector Plug	38-9247	
49	Pilot Lamp Bulb	34-2068	.12
	Speaker KR-29	36-1379	
Bezel Window		27-5348	.20
Bezel Throat		28-5248	.20
Bracket (Dial Ass'y)		28-5225	
Cable (Battery & Vibrator)		41-3364	
Cable (Speaker)		41-3371	
Cable (Power, A. C.)		L-2778	
Cable (Vibrator F Cabinet)		41-3369	
Cable (Vibrator B Cabinet)		41-3368	
Dial & Frame Ass'y		31-2107	.20
Dial Drive Cord		31-2086	.08
Dial Drive Spring		28-8751	.05
Dial Drive Drum		28-6662	.20
Knob (Tuning)		27-4321	
Knob (Volume)		27-4332	.10
Mtg. Bolt (Chassis)		W-490	

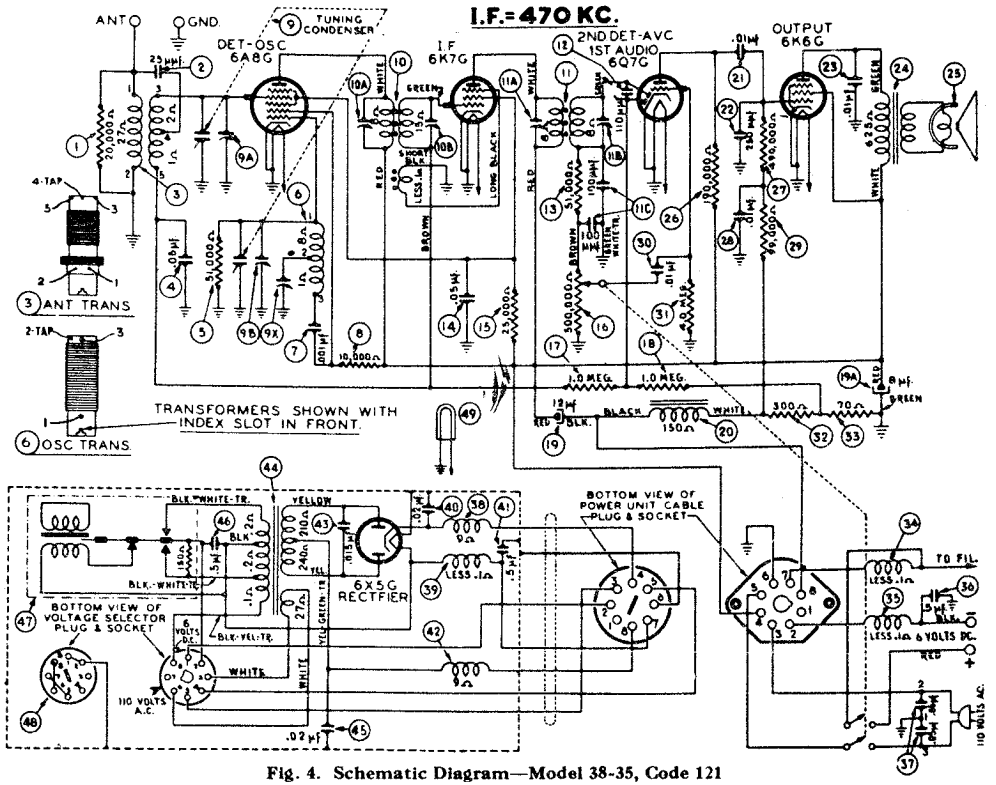

Fig. 4. Schematic Diagram—Model 38-35, Code 121

Schem. No.	Description	Part No.	List Price
	Mtg. Washer-Rubber (Vibrator "B" Cabinet)	3914	
	Mtg. Washer-Rubber (Vibrator "F" Cabinet)	5189	
	Mtg. Washer-Rubber (Vibrator "B" Cabinet)	27-4307C	$1.20
	Mtg. Washer-Rubber (Vibrator "F" Cabinet)	27-4585	
	Mtg. Sleeve (Vibrator "B" Cabinet)	28-6142	
	Mtg. Sleeve (Vibrator "F" Cabinet)	28-6772	
	Pilot Lamp Ass'y	38-9270	
	Pointer (Dial)	28-5201	.20
	Rubber Sleeve (Mtg. Vibrator)	27-4637	
	Shaft Tuning	38-9107	.15
	Shield (Vibrator)	38-9245	
	Speaker (KR29)	36-1379	
	Socket (Voltage selector)	27-6054	
	Socket (6 prong)	27-6086	.11
	Socket (7 prong)	27-6087	.11
	Socket (Rectifier)	27-6058	
	Socket (Vibrator)	27-6090	
	Screw (Dial Drum)	W-1400	
	Screw (Mtg. Vibrator, B Cabinet)	W-410	
	Screw (Mtg. Vibrator, F Cabinet)	W-767	

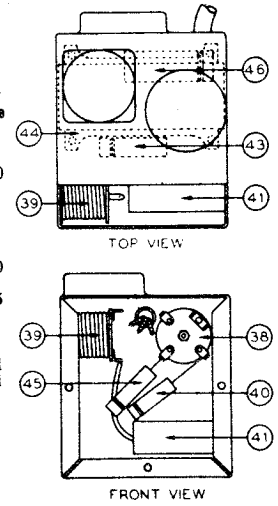

Fig. 5. Vibrator Part Locations

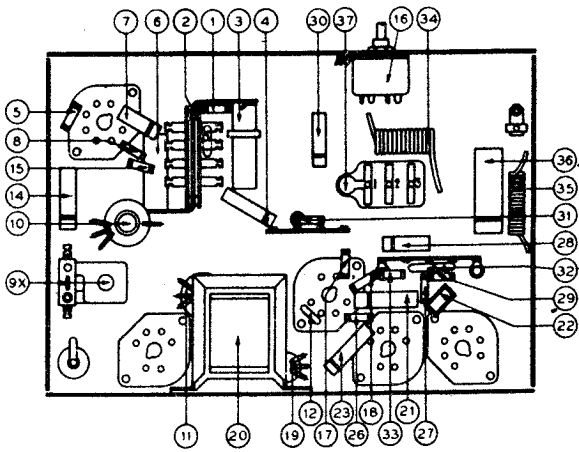

Fig. 6. Part Locations Underside of Chassis

MODEL 38-35(121)
Socket, Trimmers
Voltage, Alignment
Specs., Notes

PHILCO RADIO & TELEV. CORP.

NOTE "A"—The Dummy Antenna is a condenser connected in series with the signal generator output lead. Use the capacity specified in each step of the above procedure.

NOTE "B"—DIAL CALIBRATION: In order to adjust the receiver correctly the dial must be aligned to track properly with the tuning condenser. To adjust the dial proceed as follows:

1. Turn the tuning condenser to maximum capacity position (Plates fully meshed).
2. Holding the tuning condenser in this position, turn the dial pointer until it is parallel with the INDEX LINE. See Fig. (3). This is the correct position of pointer at the maximum capacity position.

Fig. 3. Dial Calibration. Set pointer as shown

Copyright 1937 Philco Radio & Television Corporation

TYPE OF CIRCUIT: Five tube superheterodyne circuit covering standard broadcast and state police frequencies with automatic volume control; and a pentode output circuit. The receiver is designed to operate from either a 6 volt storage battery or a 115 volt 60 cycle A.C. supply. A Plug-Switch is provided on the power unit for selection of either voltage supply. Place the plug with arrow pointing toward voltage being used. With a 6 volt storage battery supply, a vibrator in conjunction with a 6X5G tube is used for supplying "B" voltage to the receiver. When using a 115 volt supply the vibrator is removed from the circuit. See schematic diagram page 2.

Fig. 1. Socket Voltages, Underside of Chassis

The voltages indicated by arrows were measured with a **Philco 026 Circuit Tester** which contains a sensitive voltmeter. Volume Control minimum. Storage Battery fully charged or 115 V. A.C. Power Supply.

To obtain maximum performance from the receiver, a Philco Aerial Part No. 45-2428 should be used.

POWER SUPPLY: 6 volt storage battery Philco type 116R or a 115 volt 60 cycle A.C. power supply.

INTERMEDIATE FREQUENCY: 470 K. C.

TUNING RANGE: 530 to 1720 K. C.

POWER OUTPUT: 1.5 watts

PHILCO TUBES USED: 6A8G, converter and oscillator; 6K7G, I.F.; 6Q7G, 2nd detector and 1st audio; 6K6G, output; 6X5G, rectifier.

SPEAKER USED: KR29

Fig. 2. Locations of Compensators

Alignment of Compensators

EQUIPMENT REQUIRED: (1) Signal Generator, having a fundamental frequency range covering the tuning and intermediate frequencies of the receiver. Philco Model 077 A.C. operated Signal Generator or Model 088 Battery operated, Signal Generator, which have the required frequency range are the correct instruments for this purpose; (2) Output meter, Philco Model 026 circuit tester incorporates a sensitive output meter and is recommended; (3) Philco Fibre Handle Screw Driver, part No. 27-7059 and Fibre Wrench, Part No. 3164.

OUTPUT METER: The 026 output meter is connected to the plate and cathode terminals of the 6K6G tube. Adjust the meter to use the (0-30) volt scale and advance the attenuator control of the generator until a readable indication is noted on the output meter after signal is applied.

Operations In Order	SIGNAL GENERATOR			RECEIVERS			Notes
	Cable Connections	Dummy Antenna Note A	Dial Freq.	Control Positions	Dial Freq.	Adjust Compensators In Order	
1	6A8G Grid	.1 mfd.	470 K. C.	Vol. Cont. (max.)	580 K. C.	(11B), (11A) (10B), (10A)	Adjust all compensators for max. output
2	Ant. Terminal	200 mmf.	1550 K. C.	"	1500 K. C.	(9B), (9A)	See Note "B" dial Calibration
3	Ant. Terminal	200 mmf.	580 K. C.	"	580 K. C.	(9X)	Roll Tuning condenser for maximum output when adjusting compensator
4	Ant. Terminal	200 mmfd.	1500 K. C.	"	1500 K. C.	(9B), (9A)	

©John F. Rider, Publisher

©John F. Rider, Publisher

Replacement Parts
Model 38-40, Code 121

Schem. No.	Description	Part No.	List Price
1	Antenna Transformer (Range 2)	32-2558	$0.70
2	Antenna Transformer (Range 1)	32-2667	1.60
3	Condenser (.05 mf. tubular)	30-4519	.20
4	Tuning Condenser	31-2065	5.00
5	Osc. Transformer (Range 2)	32-2668	1.25
6	Osc. Transformer (Range 1)	32-2559	.50
7	Compensator (2 sections)	31-6188	.50
8	Resistor (120,000 ohms, ½ W)	33-412339	.20
9	Condenser (3500 mmf.)	30-1094	.40
10	Resistor (5,000 ohms, ½ W)	33-250339	.20
11	1st I.F. Transformer	32-2580	2.20
12	2nd I.F. Transformer	32-2582	2.20
13	Resistor, (51,000 ohms, 1 W)	33-351439	.20
14	Electrolytic Condenser (8-8 mf)	30-2291	
15	Condenser (.1 mf)	30-4455	.25
16	Resistor (10,000 ohms, 1W)	33-310439	.20
17	Resistor (1.0 meg. ½ W)	33-510339	.20
18	Condenser (110 mmf. mica)	30-1031	.20
19	Resistor (51,000 ohms, ½ W part (12)	33-351339	.20
20	Volume Control	33-5215	1.00
21	Condenser (.015 mf. tubular)	30-4358	.20
22	Resistor (1.0 meg. ½ W)	33-510339	.20
23	Resistor (1.0 meg. ½ W)	33-510339	.20
24	Condenser (.1 mf. tubular)	30-4499	.20
25	Resistor (10,000 ohms, 2 W)	30-310539	.30
26	Filter Choke	32-7543	1.35
27	Resistor (1.0 meg. ½ W)	33-510339	.20
28	Condenser (.05 mf tubular)	30-4444	.20
29	Condenser (.15 mf tubular)	30-4191	.25
30	Resistor (4,000 ohms, ½ W)	33-240339	.20
31	Electrolytic Condenser (25 mf.)	30-2219	1.50
32	Resistor (490,000 ohms, ½ W)	33-449339	.20
33	Resistor—Wire wound, (202-8—35 ohms)	33-3316	.35
34	Condenser (250 mmf. mica)	30-1032	.25
35	Condenser (.015 mf tubular)	30-4515	.20
36	Resistor (330,000 ohms, ½ W)	33-433339	.20
37	Resistor (490,000 ohms, ½ W)	33-449339	.20
38	Condenser (.03 mf tubular)	30-4447	.20
39	Output Transformer	32-7936	
40	Cone & Voice Coil Assembly (KR29)	36-3540	1.00
	Cone & Voice Coil Assembly (HR23)	36-3797	
41	Resistor (99,000 ohms, ½ W)	33-399339	.20
42	Condenser (.05 mf tubular)	30-4444	.20
43	Condenser (.008 mf tubular)	30-4112	.20
44	Tone and Power Switch	42-1393	
45	Pilot Lamp bulb	34-2068	.12
46	"A" Choke	32-2866	
47	"A" Choke	32-2038	.15
48	Condenser (.05—.05 mf bakelite)	3615DG	.40
49	Condenser (.5 mf tubular)	30-4551	
50	Condenser (.02 mf tubular)	30-4481	.20
51	"B" Choke	32-2836	
52	Condenser (.02 mf tubular)	30-4481	.20
53	"B" Choke (Part of 51)		
54	"A" Choke	32-1954	.40
55	Condenser (.5 mf metal housing)	30-4296	.60
56	Condenser (.015 mf tubular)	30-4552	
57	Condenser (.5 mf tubular)	30-4551	
58	Power Transformer	32-7934	
59	Vibrator	41-3367	
60	Range Switch	42-1358	.75
	Cable (A.C.)	L-2778	.40
	Cable (Battery)	41-3364	
	Cable-Vibrator ("K" and "X" Cabinet)	41-3369	
	Cable-Vibrator (T cabinet)	41-3368	
	Clip (Dial)	28-2488	C.90
	Clip Mtg. (R.F. Coil)	28-5002	.02
	Dial	27-5333	.60
	Dial Washer—Rubber	27-4598	.03
	Dial Clamp	28-5089	.03
	Knob (Tuning)	27-4330	.10
	Knob (Vernier)	27-4331	.10
	Knob (Volume)	27-4332	.10
	Mtg. Foot (Tuning Condenser)	28-5022	
	Mtg. Rubber (Tuning Condenser)	27-4599	.04

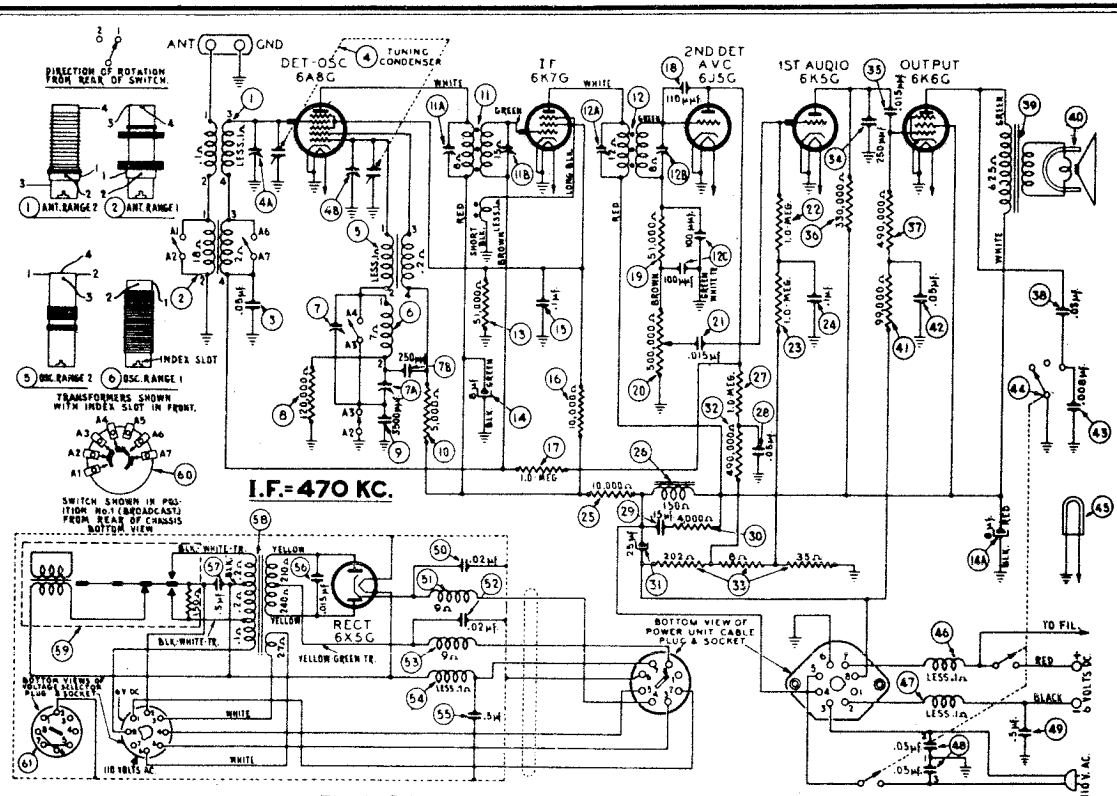

Fig. 4. Schematic Diagram—Model 38-40, Code 121

Schem. No.	Description	Part No.	List Price
	Mtg. Rubber (Vibrator Unit)	5189	$0.03
	Mtg. Rubber (Vibrator Unit)	27-4585	
	Mtg. Screw (Vibrator Unit)	W-767	
	Mtg. Spacer (Vibrator Unit)	28-6772	
	Pilot lamp Ass'y	38-8844	.35
61	Plug (Voltage Selector)	28-9247	
	Rubber Sleeve (Vibrator)	27-4637	
	Rubber Bumper (Dial)	27-4570	
	Screen	27-5320	.10
	Shield (Vibrator)	38-9245	
	Socket (Voltage Selector)	27-6054	.15
	Socket (Rectifier Tube)	27-6058	.11
	Socket (6 prong)	27-6086	.11
	Socket (7 prong)	27-6087	.11
	Socket (Vibrator)	27-6090	
	Vernier Drive	31-2128	
	"T" CABINET		
	Bezel Plate & Frame	40-6124	.90
	Bezel Gasket	27-8311	.01
	Bezel Glass	27-8298	.05
	Bezel Ring	28-5078	.55
	Bezel Screw	W-1821	C.60
	Speaker KR29	36-1379	
	"K" and "X" CABINETS		
	Bezel Plate & Frame Ass'y	40-6128	1.05
	Bezel Gasket	27-8313	.01
	Bezel Glass	27-8300	.06
	Bezel Ring	28-5080	.70
	Speaker HR23	36-1380	

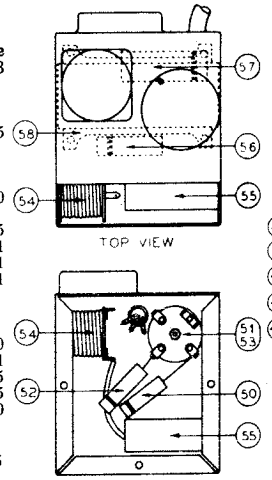

Fig. 5. Vibrator Unit Part Locations

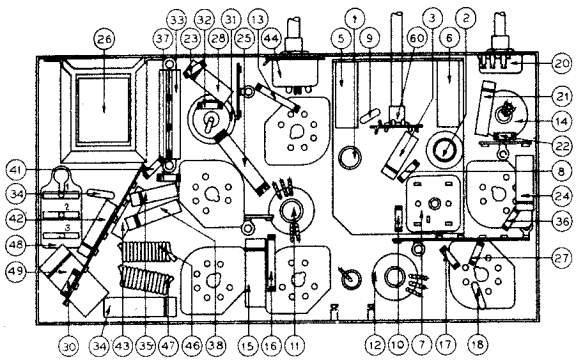

Fig. 6. Part Locations, Underside of Chassis

Sept. 1937.

MODEL 38-40(121)
Socket, Trimmers
Voltage, Alignment
Specs., Notes

PHILCO RADIO & TELEV. CORP.

TYPE OF CIRCUIT: 6 tube superheterodyne circuit covering standard and shortwave broadcasts with automatic volume control; and a pentode output circuit. The receiver is designed to operate from either a 6 volt storage battery or a 115 volt 60 cycle A.C. supply. A Plug-Switch is provided on the power unit for selection of either voltage supply. Place the plug with arrow pointing toward voltage being used. With a 6 volt storage battery supply, a vibrator in conjunction with a 6X5G tube is used for supplying "B" voltage to the receiver. When using a 115 volt supply, the vibrator is removed from the circuit. (See schematic diagram page 2).

To obtain maximum performance from the receiver, a Philco Aerial, part number 45-2428 should be used.

POWER SUPPLY: 6 volt storage battery Philco type 116R or a 115 volt 60 cycle A.C. power supply.

INTERMEDIATE FREQUENCY: 470 K.C.

TUNING RANGES: 530 to 1720 K. C.—5.7 to 18.0 M. C.

POWER OUTPUT: 1.5 watts

PHILCO TUBES USED: 6A8G, converter and oscillator; 6K7G, I.F.; 6J5G, 2nd detector; 6K5G, 1st audio; 6K6G output; 6X5G, rectifier.

SPEAKER USED: HR-23
KR29

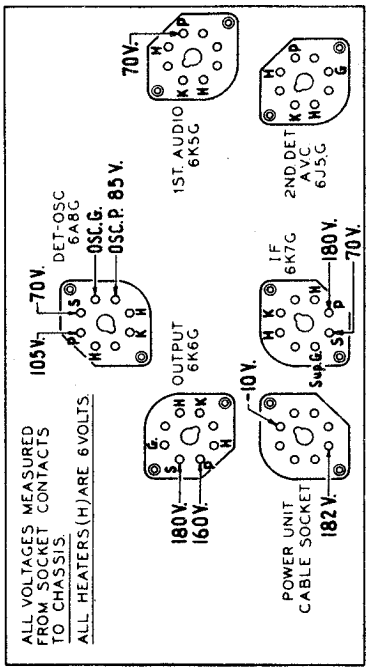

Fig. 1. Socket Voltages, Underside of Chassis

The voltages indicated by arrows were measured with a **Philco 026 Circuit Tester** which contains a sensitive voltmeter. Volume Control minimum. Storage Battery fully charged or 115 V. A.C. Power Supply.

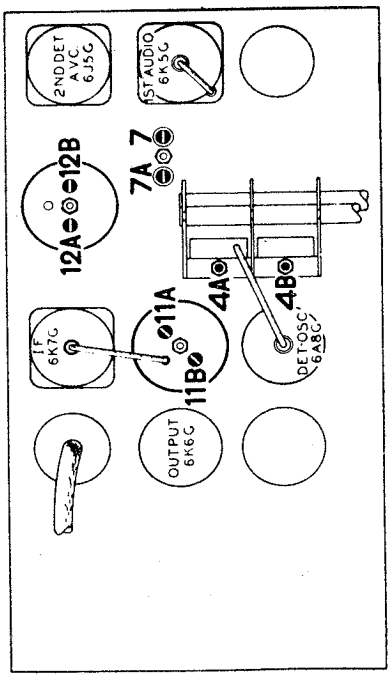

Fig. 2. Locations of Compensators

Alignment of Compensators

EQUIPMENT REQUIRED: (1) Signal Generator, having a fundamental frequency range covering the tuning and intermediate frequencies of the receiver. Philco Model 077 A.C. operated Signal Generator or Model 088 Battery operated, Signal Generator, which have the required frequency range are the correct instruments for this purpose; (2) Output meter, Philco Model 026 circuit tester incorporates a sensitive output meter and is recommended; (3) Philco Fibre Handle Screw Driver, part No. 27-7059 and Fibre Wrench, part No. 3164.

OUTPUT METER: The 026 output meter is connected to the plate and cathode terminals of the 6K6G tube. Adjust the meter to use the (0-30) volt scale and advance the attenuator control of the generator until a readable indication is noted on the output meter after signal is applied.

Operations in Order	SIGNAL GENERATOR			RECEIVER			NOTES
	Cable Connections	Dummy Antenna Note A	Dial Freq.	Control Positions	Dial Freq.	Adjust Compensators In Order	
1	6A8G Grid	.1 mfd.	470 K. C.	Vol. Control Max. Range Switch (1)	580 K. C.	(12B), (12A) (11B), (11A)	Adjust all compensators for "Max." output
2	Antenna and ground of receivers	400 ohms	18.0 M. C.	Range Switch (2)	18.0 M. C.	(4B)	Check image at 17.060 M. C.
3	Antenna and ground of receivers	200 mmfd.	1550 K. C.	Range Switch (1)	1550 K. C.	(7), (4A)	
4	Antenna and ground of receivers	200 mmfd.	580 K. C.	Range Switch (1)	580 K. C.	(7A)	
5	Antenna and ground of receivers	200 mmfd.	1550 K. C.	Range Switch (1)	1550 K. C.	(7), (4A)	

NOTE "A"—The Dummy Antenna is a condenser connected in series with the signal generator output lead. Use the capacity or resistance as specified in each step of the above procedure.

NOTE "B"—DIAL CALIBRATION: In order to adjust the receiver correctly the dial must be aligned to track properly with the tuning condenser. To adjust the dial proceed as follows:

1. Turn the tuning condenser to maximum capacity position (plate fully meshed).
2. Holding the tuning condenser in this position, loosen the dial clamp; then turn the dial until the indicator is centered on the middle index line (See Fig. 3). Tighten clamp in this position.

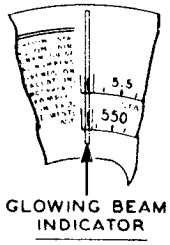

Fig. 3. Dial Calibration

Copyright 1937, Philco Radio & Television Corporation

©John F. Rider, Publisher

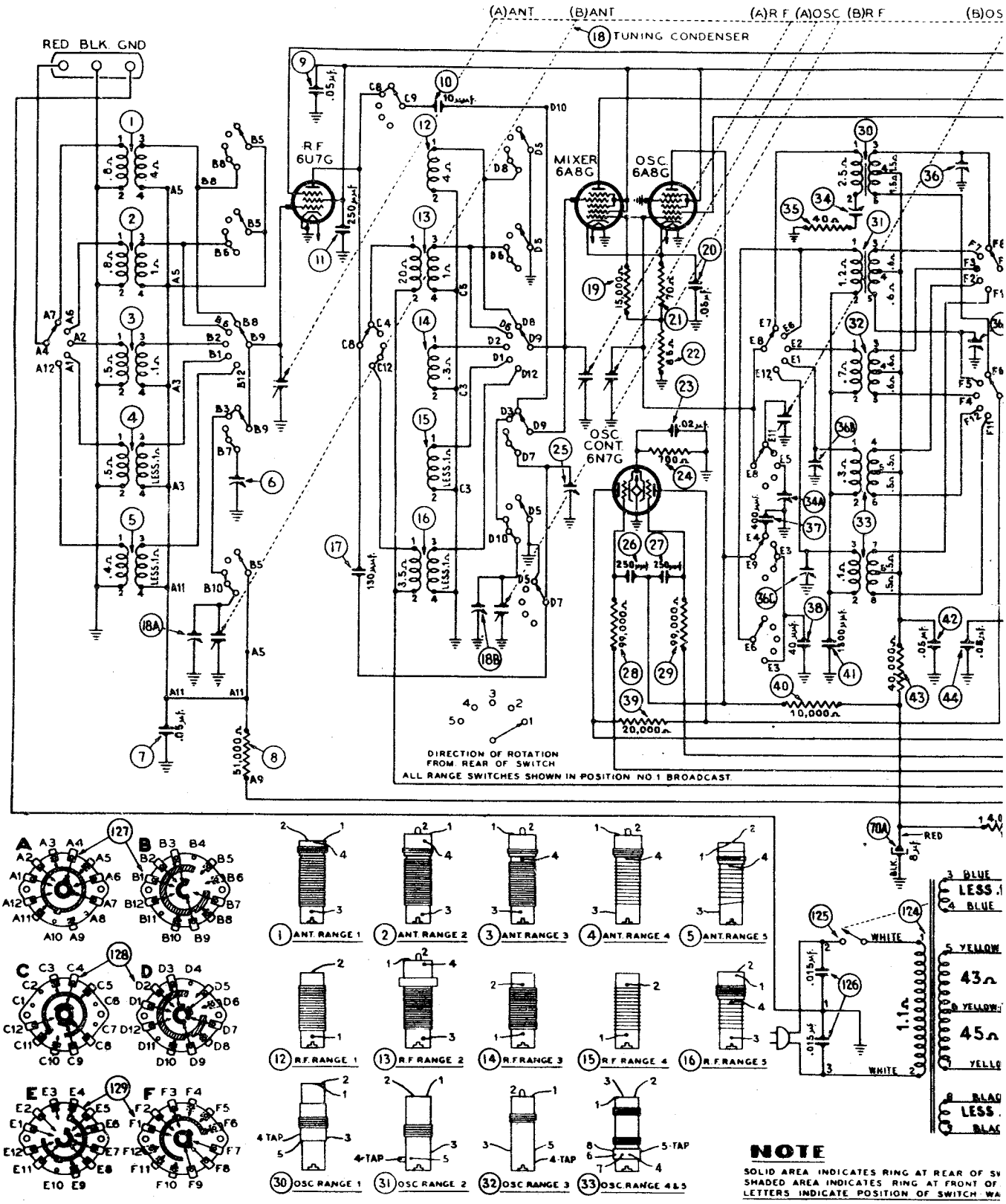

Fig. 5. Schematic Diagra

©John F. Rider, Publisher

) & TELEV. CORP.

MODEL 38-116(125)
Schematic, Coils

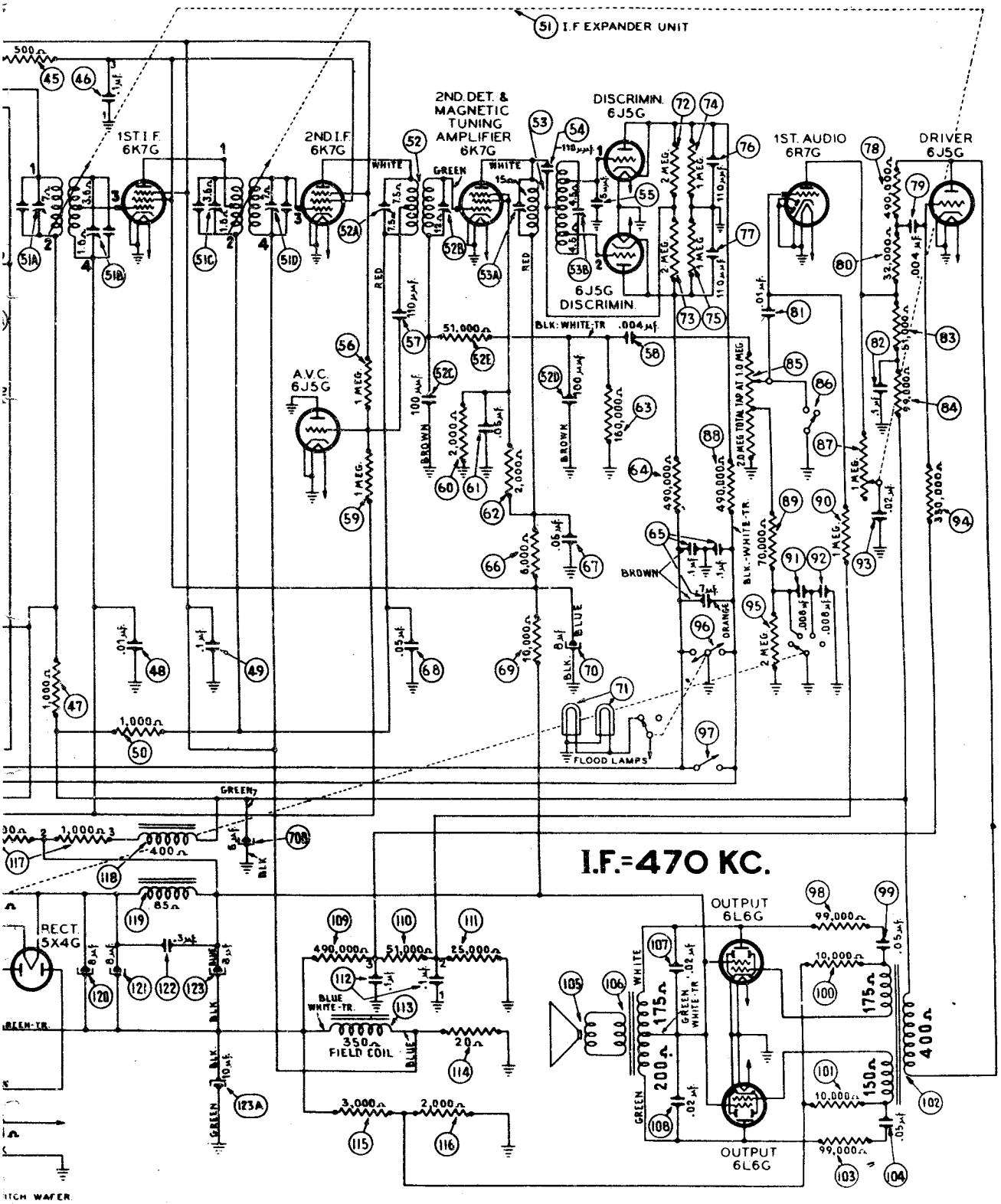

ITCH WAFER
SWITCH WAFER
ERS FROM REAR OF CHASSIS, (BOTTOM VIEW)

n Model 38-116, Code 125

PHILCO RADIO & TELEV. CORP.

MODEL 38-116(125)
Chassis Layouts
Speaker Wiring
Transformer Data

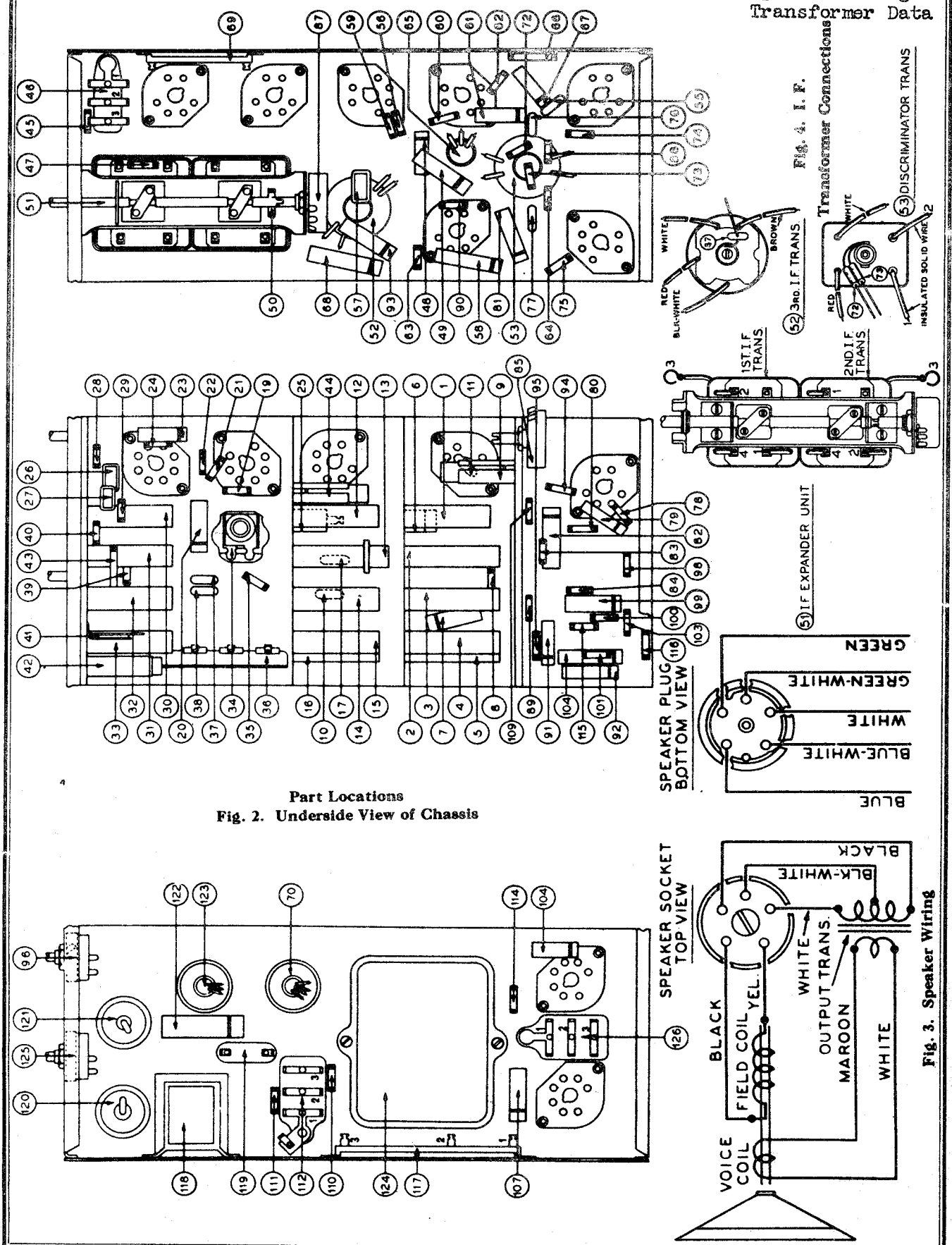

Part Locations
Fig. 2. Underside View of Chassis

Fig. 3. Speaker Wiring

©John F. Rider, Publisher

MODEL 38-116(125)
Socket, Voltage
Specs., Notes

PHILCO RADIO & TELEV. CORP.

FREQUENCY RANGES: Range One 530 to 1600 K.C.
Two 1.58 to 4.75 M.C.
Three 4.7 to 7.4 M.C.
Four 7.35 to 11.6 M.C.
Five 11.5 to 18.2 M.C.

UNDISTORTED OUTPUT: 15 watts.

CABINET: Type XX.

Copyright 1937, Philco Radio & Television Corporation

PHILCO TUBES USED: 6U7G R.F.; 6A8G Mixer; 6A8G Oscillator; 6N7G Oscillator control; two 6K7G I. F.; 6K7G 2nd Detector and Magnetic tuning amplifier; two 6J5G discriminator; 6J5G A. V. C.; 6R7G 1st audio; 6J5G audio driver; two 6L6G audio output, and one 5X4G rectifier.

TONE CONTROLS: Two—1. High audio-frequency tone varied by Treble-Selectivity control.
2. Low audio-frequency tone varied by "Bass Tone Control," in the volume control circuit.

PHILCO SPEAKERS USED: One type "W5" with three acoustic clarifiers.

SERVICE NOTES

For reference between illustrations, Parts List, and for replacement of parts, the various diagrams in this bulletin are marked with "circled numbers" indicating a particular part.

Physical views of the R. F. and I. F. transformers and the range switch sections are shown on pages 2 and 3. Each part is marked with the corresponding schematic diagram circled number.

The leads and lugs of the R. F. and I. F. transformers are either numbered or the color of the wire marked to indicate the connecting point in the circuit diagram, which is also correspondingly marked.

Rear views of the range switch sections are also shown in Fig. 5. The lugs on each are marked with a letter and number—example (A2)—indicating the connecting point of each lug in the circuit diagram.

Speaker wiring is shown in Fig. 3 and the power transformer wire colors are marked on the schematic diagram.

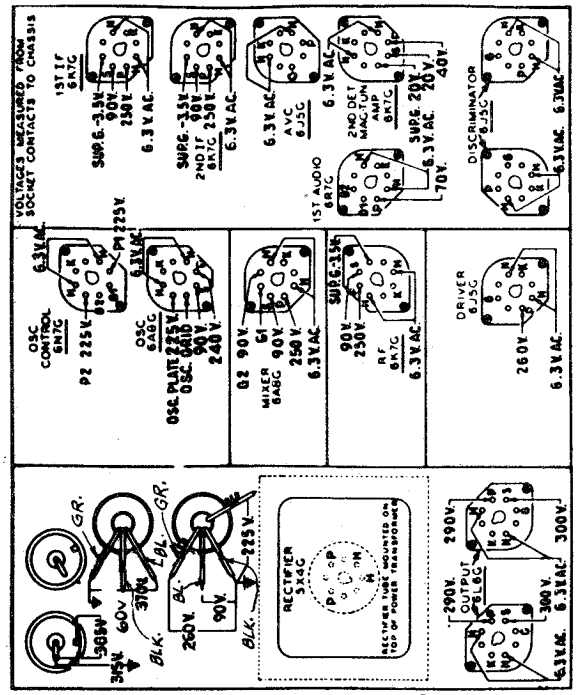

Fig. 1. Underside View of Chassis showing Socket Voltages

The voltages indicated by the arrows were measured with a Philco 026 Circuit Tester, which contains a sensitive voltmeter. Line voltage 115 A. C.—Volume control minimum—Dial set at point where no signal is present—Range Switch in broadcast position.

For identifying the sections on the diagram Fig. 2, the dotted line of the tuning condenser is marked as follows: Small capacity sections are marked Ant. "A"; R. F. "A", and Osc. "A"; and the large capacity sections—Ant. "B"; R. F. "B", and Osc. "B".

Automatic Tuning Mechanism Service Data

Service data and a complete parts list for the Automatic Tuning Mechanism of this receiver will be found in Service Bulletin 273. There are four automatic dial parts, however, which differ from those shown in bulletin 273. These parts are marked with an asterisk on page 4 of this bulletin.

Aerial Connections

To obtain the full advantage of the sensitivity of this receiver the **Philco High Efficiency Aerial** Part No. 40-6112 should be used. Connect the aerial as follows:

The aerial terminal panel located on the rear of the chassis, contains three terminals marked "Red," "Blk" and "Gnd". Connect the red and black wires of the aerial lead in (Transmission Line) to the "Red" and "Blk" terminals respectively. Connect the "Gnd" terminal to a good ground source. If a temporary aerial is used, connect it to the "Red" terminal.

SPECIFICATIONS

TYPE OF CIRCUIT: Model 38-116, code 125, employs a fifteen tube, A. C. operated superheterodyne circuit with the **Philco Automatic Tuning Dial**, having five tuning ranges, covering a frequency range from 530 K. C. to 18.2 M. C.

Incorporated in this model are design features such as Magnetic Tuning control on each tuning range; Automatic Volume Control; Fidelity and Selectivity controlled by variable I. F. Transformers; Bass Compensation; Acoustic Clarifiers to eliminate cabinet reasonance; Split Stator Tuning Condensers for spreading short wave stations further apart, and Special Push-Pull Audio Output circuit using 6L6G Beam tubes.

POWER SUPPLY:	**Voltage**	**Frequency Cycles**	**Power Consumption**
	115	50 to 60	165 watts
	115	25 to 40	165 watts
	115/230	50 to 60	165 watts

Different transformers are required for operation on the voltages and frequencies listed above. The part numbers for these transformers are listed on page 4. A special transformer for operation on either 115 or 230 volt—50 to 60 cycle A.C. power circuit can be obtained. This transformer is provided with a plug and socket for selection of either voltage rating. Place the plug with arrow pointing toward voltage being used.

INTERMEDIATE FREQUENCY: 470 K.C.

For band spread purposes, the stator plates of the tuning condensers in this receiver are designed in two sections; one section is of small capacity, and the other of large capacity. The sections are interconnected through the range switch.

The small capacity sections of the stators are used when tuning ranges 3, 4 and 5. When tuning ranges 1 and 2 both stator sections are connected in parallel.

©John F. Rider, Publisher

PHILCO RADIO & TELEV. CORP.

MODEL 38-116(125)
Alignment, Tuner

Model 38-116, Code 125

Alignment of Compensators

EQUIPMENT REQUIRED: (1) Signal Generator, having a fundamental frequency range covering the tuning and intermediate frequencies of the receiver. **Philco Model 077 Signal Generator** which has a fundamental frequency range from 115 to 36000 K. C. is the correct instrument for this purpose; (2) Output Meter, **Philco Model 026 Circuit Tester** incorporates a sensitive output meter and is recommended; (3) Philco Fibre Handle Screw Driver, Part No. 27-7059 and Fibre Wrench, Part No. 3164.

OUTPUT METER: The 026 Output Meter is connected to the plate and cathode terminals of one of the 6L6G tubes. Adjust the meter to use the (0-30) volt scale and advance the attenuator control of the generator until a readable indication is noted on the output meter after signal is applied to stage being adjusted.

DIAL CALIBRATION: In order to adjust the compensators of this receiver correctly the dial must be aligned to track properly with the tuning condenser. To do this proceed as follows:

1. Loosen the set screws on the shaft coupling of the tuning condenser. Then turn the tuning condenser until the plates are in the maximum capacity position. Now turn the dial until the glowing beam indicator is on the Index Line at the low frequency end of range 3. (See Fig. 8). With the dial and tuning condenser in this position tighten set screws.

2. Turn the tuning condenser control until the indicator is on the 4.71 M. C. mark of range 3. (See Fig. 8.)

3. With the dial in this position, loosen the shaft coupling set screws. Then turn the dial until the indicator is again on the Index Line. Tighten the set screws in this position. Be careful when turning the dial that the position of the tuning condenser is not disturbed.

INTERMEDIATE FREQUENCY CIRCUIT

1. Viewing each instrument from the front, set the receiver and Signal Generator controls as follows:

a. Selectivity-fidelity control (clockwise)

b. Volume Control at maximum (clockwise)

c. Magnetic Tuning Switch (off)

d. Bass Compensation Switch first position from "Off"

e. Range Switch position one (broadcast)

f. Receiver dial 580 K. C.

g. Signal Generator indicator set at 470 K. C. and the "Attenuator" control for maximum output.

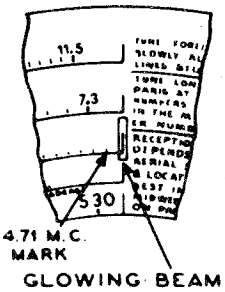

Fig. 8. Dial Calibration

2. Connect the Signal Generator output cable through a .1 mfd. condenser to the grid of the second 6K7G I. F. tube. Then adjust the I. F. compensators as follows:

a. Close compensator (**52B**) by turning to the extreme clockwise position, then pad compensator (**52A**) for maximum output. Now readjust compensator (**52B**) for maximum output.

b. Connect the Signal Generator output lead through the .1 mfd. condenser to the grid of the 6A8G Mixer tube, and adjust the following compensators for maximum output: (**51D**), (**51C**), (**51B**), (**51A**).

c. Repad (**52A**), See Note. A Check for two equal peaks. Treble-Selectivity control in expanded position (counter-clockwise).

RADIO FREQUENCY CIRCUIT

1. Connect the Signal Generator output cable to the "Red" and "Blk" terminals on the aerial panel (rear of chassis). The ground connection of the cable should be connected to the "Blk" terminal. Set the controls as given under "Intermediate Frequency Circuit" (a-b-c-d) and set the Range Switch, Signal Generator and Receiver Dials as given in the following procedure.

2. Set the controls and adjust the compensators for maximum output as follows:

Range Switch Position	Signal Generator and Receiver Dials	Compensators in Order
1	1550 K. C.	(**36**), (**18B**), (**18A**)
1	580 K. C.	(**34**)
1	1550 K. C.	(**36**), (**18B**), (**18A**)
5	18 M. C.	(**36C**) **See Note C**
5	18 M. C.	(**25**), (**6**) **Roll Tuning Condenser. See Note B**
4	11 M. C.	(**36B**)
3	7 M. C.	(**34A**)
2	4.5 M. C.	(**36A**)
5	18 M. C.	(**36C**) **See Note C**
5	18 M. C.	(**25**), (**6**), **Roll Tuning Condenser. See Note B**

NOTE "A"—Slowly shift signal generator indicator between 460 and 480 K. C. As the indicator is turned, two peaks will be noted on the Output Meter; one about 465 K. C. and the other about 475 K. C. These peaks should give the same deflection or reading on the output meter. If the peaks are unequal, Compensator (**52A**) must be slightly readjusted to the right or left (not more than ⅛ of a turn) until the peaks are equalized. Each time the compensator is set in another position, rotate the signal generator through the 460 or 480 K. C. range and note the reading of each peak. This adjustment is used to compensate for slight differences between peaks. If the compensator must be turned more than ⅛ of a turn in either direction to equalise the peaks, all padders should be carefully readjusted as given under "Intermediate Frequency Circuit" adjustment procedure.

NOTE "B"—When adjusting the low frequency compensator of Range 1 (Broadcast) or the antenna and R. F. compensators of the high frequency tuning range, the receiver Tuning Condenser must be adjusted (rolled) as follows: First tune the compensator for maximum output, then vary the tuning condenser of the receiver for maximum output about the frequency dial mark being used. Now turn the compensator slightly to the right or left and vary the receiver tuning condenser for maximum output. If the out reading increases, turn the compensator in the same direction a trifle more, and again vary the tuning condenser for maximum output. If the output decreases, set the compensator in the opposite direction. This procedure of first setting the compensator and then varying the tuning condenser is continued until there is no further gain in output reading.

NOTE "C"—To accurately adjust the high frequency oscillator compensator to the fundamental instead of the image signal, turn the oscillator compensator to the maximum capacity position (clockwise). From this position slowly turn the compensator counter clockwise until a second maximum peak is obtained on the output meter. Adjust the compensator for maximum output using this second peak. The first peak from the maximum capacity position of the compensator is the image signal and must not be used in adjusting the compensator.

If the above procedure is correctly performed, the image signal will be found (much weaker) by turning the receiver dial 940 K. C. below the frequency being used on the high frequency range.

MAGNETIC TUNING CIRCUIT ADJUSTMENT

a. Set the Magnetic Tuning switch in the "out" position (counter-clockwise).

b. Volume control maximum (extreme clockwise).

c. Turn Treble-Selectivity control to the Selective position (extreme clockwise).

d. Now turn the signal generator indicator to the 1000 K. C. mark and adjust the "Attenuator" control for a weak signal. Then adjust the receiver dial for maximum output at this frequency.

NOTE: The receiver dial **MUST** be tuned very accurately to the 1000 K. C. signal in order to make the following adjustments correctly.

e. After adjusting the receiver dial, turn the Magnetic Tuning Switch "on".

f. Now, turn compensator (**53B**) slightly to the right or left (about ¼ turn) and proceed with adjustment "g."

g. Adjust compensator (**53A**) primary of the discriminator transformer for **minimum** output; then readjust compensator (**53B**) secondary of discriminator transformer for **maximum** output.

The above adjustments are now checked for accuracy as follows:

Frequency Test:

With the 1000 K. C. signal tuned for maximum output turn the Magnetic Tuning control back and forth; that is, from the "out" to "in" position. The reading of the output meter should not change in either position. If the output meter reading changes, the above magnetic tuning circuit adjustments should be repeated.

A further check on the magnetic tuning adjustment is to very carefully tune in a broadcasting station and then turn the magnetic tuning switch from the "out" to the "in" position. With the switch in either position, the tone of the station should not change. If a change of tone or hiss develops repeat the above Magnetic Tuning Adjustments.

Sensitivity Test:

1. To check the magnetic tuning circuit for sensitivity, turn the magnetic tuning switch to the "off" position, and tune in the 1000 K. C. signal. Then adjust the "attenuator" control of the signal generator for a good audible signal,—approximately 20 volts on the output meter.

2. Now detune the signal (first above and then below the 1000 K. C. mark) to a point at which the signal is weakly heard. At each point turn the magnetic tuning control "ON". When the control is turned "ON" the signal should return to normal output strength. If the magnetic tuning circuit does not pull the signal into resonance, the primary compensator (**53A**) should be carefully readjusted.

©John F. Rider, Publisher

MODEL 38-116(125)
Trimmers, Parts

PHILCO RADIO & TELEV. CORP.

REPLACEMENT PARTS—Model 38-116, Code 125

Schem. No.	Description	Part No.	List Price
1	Ant. Transformer (Range 1)	32-2615	$0.70
2	Ant. Transformer (Range 2)	32-2616	.70
3	Ant. Transformer (Range 3)	32-2617	.70
4	Ant. Transformer (Range 4)	32-2618	.70
5	Ant. Transformer (Range 5)	32-2619	.70
6	Compensator (R. F.)	31-6084	.15
7	Condenser (.05 μf tubular)	30-4519	.20
8	Resistor (51,000 Ω, ½ watt)	33-351339	.20
9	Condenser (.05 μf tubular)	30-4123	.20
10	Condenser (10 μμf mica)	30-1065	.20
11	Condenser (250 μμf mica)	30-1032	.25
12	R. F. Transformer (Range 1)	32-2620	.70
13	R. F. Transformer (Range 2)	32-2621	1.00
14	R. F. Transformer (Range 3)	32-2622	.50
15	R. F. Transformer (Range 4)	32-2623	.50
16	R. F. Transformer (Range 5)	32-2624	.70
17	Condenser (130 μμf mica)	30-1036	.20
18	Tuning Condenser Assembly	31-2036	
19	Resistor (15,000 Ω, ½ watt)	33-315339	.20
20	Condenser (.05 μf tubular)	30-4444	.20
21	Resistor (70 Ω, ½ watt)	33-070339	.20
22	Resistor (85 Ω, ½ watt)	33-085339	.20
23	Condenser (.02 μf tubular)	30-4215	.20
24	Resistor (700 Ω, ½ watt)	33-070339	.20
25	Compensator	31-6084	.15
26	Condenser (250 μμf mica)	30-1032	.25
27	Condenser (250 μμf mica)	30-1032	.25
28	Resistor (99,000 Ω, ½ watt)	33-399339	.20
29	Resistor (99,000 Ω, ½ watt)	33-399339	.20
30	Osc. Transformer (Range 1)	32-2625	1.60
31	Osc. Transformer (Range 2)	32-2626	1.60
32	Osc. Transformer (Range 3)	32-2627	1.60
33	Osc. Transformer (Ranges 4 & 5)	32-2628	1.60
34	Compensator (2 sections)	31-6100	.40
35	Resistor (40 Ω, ½ watt)	33-040339	.20
36	Compensator (4 sections)	31-6200	.80
37	Condenser (400 μμf mica)	30-1089	
38	Condenser (40 μμf mica)	30-1066	
39	Resistor (20,000 Ω, ½ watt)	33-320339	.20
40	Resistor (10,000 Ω, ½ watt)	33-310339	.20
41	Condenser (1300 μμf mica)	31-6205	.40
42	Condenser (.05 μf tubular)	30-4123	.20
43	Resistor (40,000 Ω, 1 watt)	33-340439	.20
44	Condenser (.05 μf tubular)	30-4123	.20
45	Resistor (500 Ω, ½ watt)	33-150339	.20
46	Condenser (.1 μf Bakelite)	4989SG	.35
47	Resistor (1,000 Ω, ½ watt)	33-210339	.20
48	Condenser (.01 μf tubular)	30-4515	.20
49	Condenser (.1 μf tubular)	30-4499	.20
50	Resistor (1,000 Ω, ½ watt)	33-210339	.20
†51	I. F. Expander Unit Assembly (See Note for 1st and 2nd I. F. Transformers)	38-8912	10.00
52	3rd I. F. Transformer	32-2660	2.20
53	Ducrimin. Transformer	32-2661	4.00
54	Condenser (110 μμf mica) (Part of 53)	30-1031	.20
55	Condenser (.5 μμf mica)	30-1097	.20
56	Resistor (1.0 meg., ½ watt)	33-510339	.20
57	Condenser (110 μμf mica)	30-1031	.20
58	Condenser (.004 μf tubular)	30-4456	.20
59	Resistor (1.0 meg., ½ watt)	33-510339	.20
60	Resistor (2,000 Ω, ½ watt)	33-220339	.20
61	Condenser (.05 μf tubular)	30-4444	.20
62	Resistor (2,000 Ω, ½ watt)	33-220339	.20
63	Resistor (160,000 Ω, ½ watt)	33-416339	.20
64	Resistor (490,000 Ω, ½ watt)	33-449339	.20
65	Condenser (.1—.1—.7 μf)	30-4537	
66	Resistor (6,000 Ω, 1 watt)	33-260439	.20
67	Condenser (.05 μf tubular)	30-4444	.20
68	Condenser (.05 μf tubular)	30-4518	.20
69	Resistor (10,000 Ω, ½ watt)	33-310339	.20
70	Electrolytic Condenser (8—8—6 μf)	30-2232	2.50
71	Flood Lamp Bulb	34-2064	.09
72	Resistor (2.0 meg., ½ watt)	33-520399	.20
73	Resistor (2.0 meg., ½ watt)	33-520339	.20
74	Resistor (1.0 meg., ½ watt)	33-510339	.20
75	Resistor (1.0 meg., ½ watt)	33-510339	.20
76	Condenser (110 μμf mica)	30-1031	.20
77	Condenser (110 μμf mica)	30-1031	.20
78	Resistor (490,000 Ω, ½ watt)	33-449339	.20
79	Condenser (.004 μf tubular)	30-4456	.20
80	Resistor (32,000 Ω, ½ watt)	33-332339	.20
81	Condenser (.01 μf tubular)	30-4169	.20
82	Condenser (.1 μf tubular)	30-4455	.25
83	Resistor (51,000 Ω, ½ watt)	33-351339	.20
84	Resistor (99,000 Ω, ½ watt)	33-399339	.20
85	Volume Control	33-5158	1.00
86	Audio Shorting Switch (Part of Auto. Tuner—See parts (6) and (16) Bulletin 273)		
87	Potentiometer	33-5235	1.00
88	Resistor (490,000 Ω, ½ watt)	33-449339	.20
89	Resistor (70,000 Ω, ½ watt)	33-370339	.20
90	Resistor (1.0 meg., ½ watt)	33-510339	.20
91	Condenser (.006 μf tubular)	30-4112	.20
92	Condenser (.006 μf tubular)	30-4112	.20
93	Condenser (.02 μf tubular)	30-4481	.20
94	Resistor (330,000 Ω, ½ watt)	33-433339	.20
95	Resistor (490,000 Ω, ½ watt)	33-449339	.20
96	A. F. C. Switch	42-1216	.75
97	A. F. C. Shorting Switch (Part of Auto. Tuner—Bulletin 273)	45-2330	1.20
98	Resistor (99,000 Ω, ½ watt)	33-399339	.20
99	Condenser (.05 μf tubular)	30-4518	.20
100	Resistor (10,000 Ω, ½ watt)	33-310329	.20
101	Resistor (10,000 Ω, ½ watt)	33-310339	.20
102	Input Transformer	32-7865	$2.50
103	Resistor (99,000 Ω, ½ watt)	33-399339	.20
104	Condenser (.05 μf tubular)	30-4518	.20
105	Cone & Voice Coil Assembly	36-3647	2.50
106	Output Transformer	32-7751	2.00
107	Condenser (.02 μf tubular)	30-4481	.20
108	Condenser (.02 μf tubular)	30-4481	.20
109	Resistor (490,000 Ω, ½ watt)	33-449339	.20
110	Resistor (51,000 Ω, ½ watt)	33-351339	.20
111	Resistor (25,000 Ω, ½ watt)	33-325339	.20
112	Condenser (.1 μf—.1 μf Bakelite)	4989DG	.40
113	Field & Pot Assembly	36-3788	15.00
114	Resistor (20 Ω, ½ watt)	33-020339	.20
115	Resistor (8,000 Ω, ½ watt)	33-280339	.20
116	Resistor (2,000 Ω, ½ watt)	33-220339	.20
117	Resistor, wire-wound (4,000 Ω—1,000 Ω)	33-3290	.50
118	Choke	32-7722	1.20
119	Choke	32-7066	2.20
120	Electrolytic Condenser	30-3026	1.06
121	Electrolytic Condenser	30-3026	1.06
122	Condenser (.2 μf tubular)	30-4465	.25
123	Electrolytic Condenser (8—10 μf)	30-2201	1.75
124	Power Transformer		
	115 V.—50-60 cycles	32-7699	7.50
	115 V.—25-40 cycles	32-7700	12.00
	115-230 V.—50-60 cycles	32-7701	10.00
125	Power & Bass Tone Switch	42-1196	.75
126	Condenser (.015—.015 μf Bakelite)	3793DG	.40
127	Wave Switch (Ant. Section)	42-1354	1.50
128	Wave Switch (R. F. Section)	42-1355	1.50
129	Wave Switch (Osc. Section)	42-1356	1.50
	Acoustic Clarifier	36-1155	1.25
	Automatic Tuning Mech. Complete	31-2065	
	Bezel Assembly (Cabinet)	38-8833	
	Brace (Dial Mechanism)	28-4119	.05
	Cable and Plug (Floodlights)	41-3259	.25
	Cable (Power)	L-2183	.40
	Cable and Plug (Speaker)	41-3338	
	Clamp (R. F. Unit Rear Mtg.)	28-3900	.03
	Clamp Locking Plate (R. F. unit)	28-3982	.01
	Clamp (I. F. Cord)	28-4147	.01
	Cord (I. F. Expander Drive)	27-8411	.04
	Coupling (Range Switch and Mask)	38-8693	
	Coupling (Tuning Condenser and Dial Mechanism)	31-1961	
	*Cover (Handle of Automatic Mech.)	28-8092	
	*Dial	27-5340	.80
	*Dial Screen and Lens Holder Ass'y	31-2063	
	*Escutcheon Assembly (Station Tabs)	45-2472	
	Knob (Range Switch)	27-4326	.10
	Knob (Tuning)	27-4330	.10
	Knob (Vernier)	27-4331	.10
	Knob (Bass, Volume, Expander Magnetic)	27-4332	.10
	Mask Guide (Tuning Mechanism)	28-4118	.25
	Pilot Lamp Socket Assembly (3 Sockets)	38-8457	
	Shaft and Index Plate (Range Switch)	42-1206	.50
	Shaft (I. F. Expander)	28-6496	$0.30
	Shaft (Volume Control)	38-8061	.12
	Shield (Tube, Square)	29-2726	.10
	Shield (Round 6N7G)	8006	.10
	Shield 3rd (I. F.)	38-1962	
	Shield (I. F. Expander)	38-9025	
	Shield Base (Square)	28-2725	.20
	Shield Base (Round 6N7G)	8004	.03
	Speaker (W8)	36-1363	
	Socket (7 prong, Power tubes)	27-6067	.11
	Socket (7 prong)	27-6067	.11
	Socket (6 prong)	27-6086	.11
	Socket (Power Transformer)	27-6052	.11
	Terminal Panel (Ant.)	38-3746	
	MISCELLANEOUS MOUNTING PARTS		
	Bolt (Mtg. Speaker)	W-862	
	Bushing (Mtg. R. F. Unit)	28-2257	.01
	Clip (Volume Shaft Front Section)	28-4394	.01
	Cover (Back of Cabinet)	27-8356	
	Felt (Mtg. Speaker)	27-8498	.15
	Rubber Grommet (Mtg. R. F. Unit)	27-4317	.04
	Rubber Bushing (Mtg. Chassis)	27-4202	.06
	Rubber Bushing (Mtg. Chassis)	27-4360	
	Rubber Cushion (Mtg. Chassis)	3558	
	Pin (I. F. Shaft)	3014	
	Screw (Mtg. R. F. Unit Rear Section)	W-729	
	Screw (I. F. Cord Clamp)	W-1324	
	Snap Fastener (Range Switch Coupling)	28-4279	
	Spacer (Mtg. R. F. Unit)	27-7807	
	Spring (Retaining I. F. Shaft Front Section)	28-8610	
	Spring Clip (I. F. Shaft, Rear Section)	28-4117	per C .40
	Washer—Flat—(I. F. Shaft)	W-174	
	Washer (Mtg. R. F. Unit)	28-3927	.01
	Washer—Spring—(Mtg. I. F. Shaft)	28-4186	per C .75

*These Automatic Tuning Mechanism Parts differ from those shown in Service Bulletin 273.

‡1st I. F. Transformer Section	32-2727	
2nd I. F. Transformer Section	32-2728	

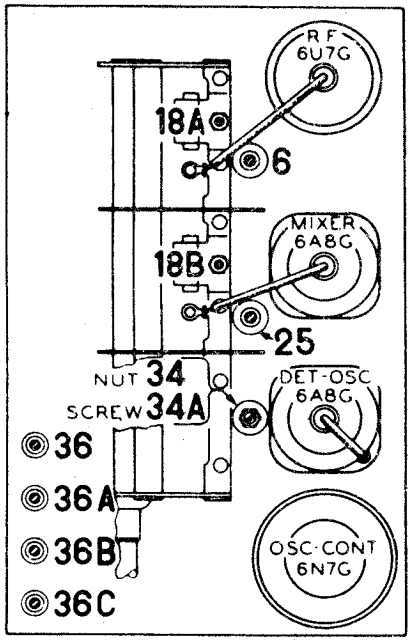

Fig. 6. Top View of R. F. Unit Showing Compensator Locations

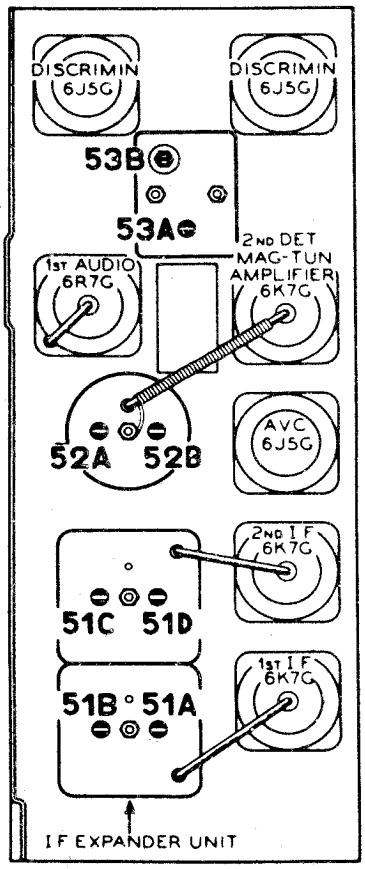

Fig. 7. Top View of I. F. Unit Showing Compensator Locations

Prices Subject to Change without Notice

©John F. Rider, Publisher

MODEL 38-620(121,125)
Schematic, Coils

PHILCO RADIO & TELEV. CORP.

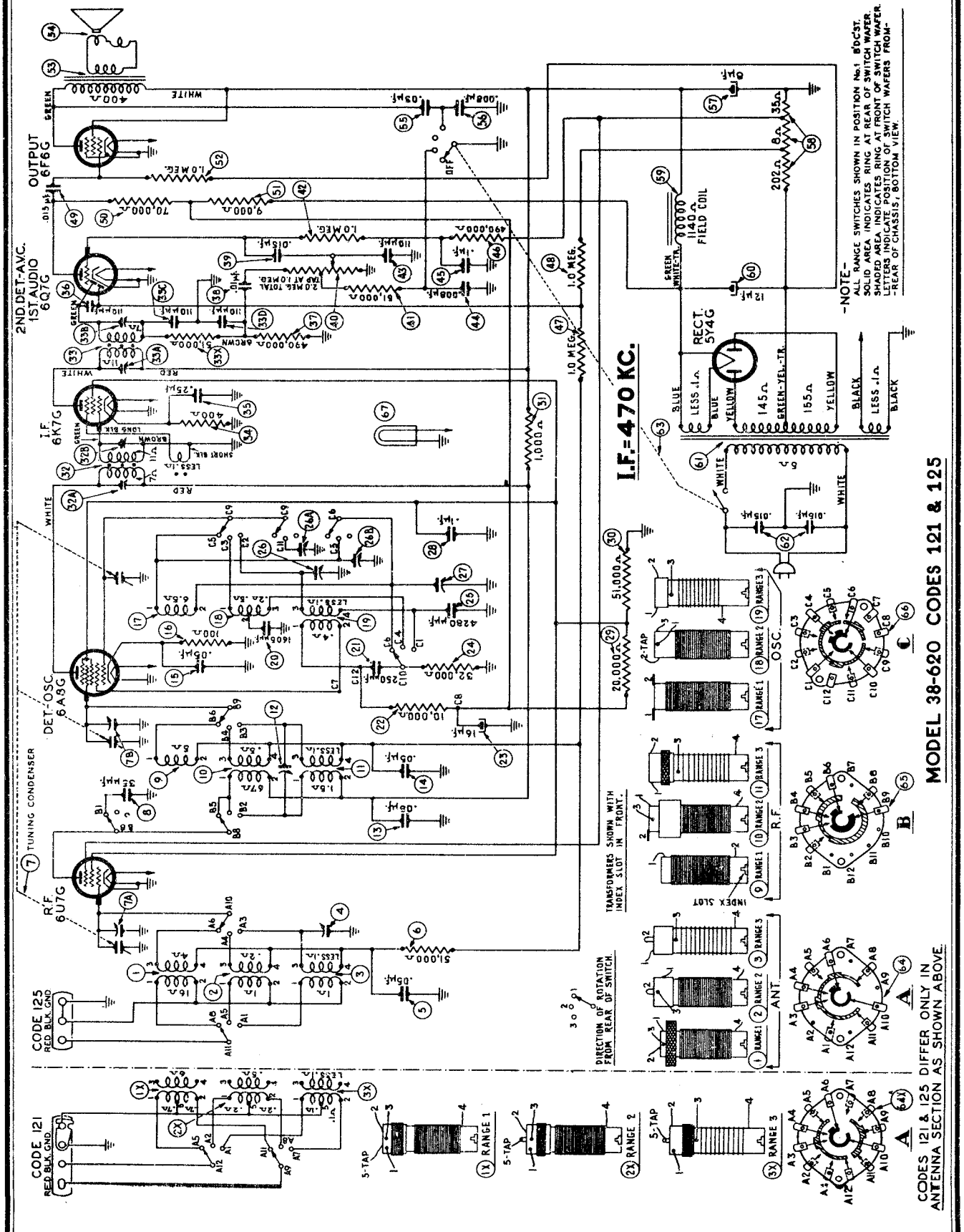

©John F. Rider, Publisher

©John F. Rider, Publisher

Model 38-690—Code 125

Alignment of Compensators

Viewing each instrument from the front, set the receiver and signal generator controls as follows:

1. Volume Control (Maximum)
2. Bass Control (Counter-Clockwise)
3. Magnetic Tuning Switch (Off)
4. Selectivity-fidelity control (Clockwise)
5. Set the remaining controls and adjust the compensators for maximum output as follows:

RANGE SWITCH POSITION	RECEIVER DIAL	SIGNAL GENERATOR DIAL	SIGNAL GENERATOR CONNECTION	ADJUST COMPENSATORS IN ORDER	NOTES
1	600 K.C.	470 K.C.	Grid 1st 6K7G-I.F.	(70B),(70A),(49B), (49A),(48B),(48A)	Insert .1 mfd. cond. in series with generator output lead
1	600 K.C.	470 K.C.	Grid 6A8G-Det.	(47B),(47A)	"
1	600 K.C.	470 K.C.	"	Turn Selectivity-fidelity control counter-clockwise and check for two equal peaks(Note "A").	
1	1550 K.C.	1550 K.C.	Red & Black Terminals Ant.	(40),(22B),(22A)	Remove .1 mfd cond. from generator output lead
1	580 K.C.	580 K.C.	"	(39)	Roll Tuning Condenser (Note "B")
1	1550 K.C	1550 K.C.	"	(40),(22B),(22A)	
5	18 M.C.	18 M.C.	"	(40C),(20),(6)	Note B. Check image at 17,080
4	11 M.C.	11 M.C.	"	(40B)	
3	7.0 M.C.	7.0 M.C.	"	(39A)	
2	4.5 M.C.	4.5 M.C.	"	(40A)	
5	18 M.C.	18 M.C.	"	(40C),(20),(6)	Roll Tuning Condenser (Note "B")

MAGNETIC TUNING CIRCUIT ADJUSTMENT

a. Set the Magnetic Tuning switch in the "out" position (counter-clockwise).

b. Volume control maximum (extreme clockwise).

c. Turn Treble-Selectivity control to the Selective position (extreme clockwise).

d. Now turn the signal generator indicator to the 1000 K. C. mark and adjust the "Attenuator" control for a weak signal. Then adjust the receiver dial for maximum output at this frequency.

NOTE: The receiver dial MUST be tuned very accurately to the 1000 K. C. signal in order to make the following adjustments correctly.

e. After adjusting the receiver dial, turn the Magnetic Tuning Switch "on". Advance the "Attenuator" and "Multiplier" controls of the signal generator for a strong signal.

f. Now, turn compensator 85B slightly to the right or left (about ¼ turn) and proceed with adjustment "g".

g. Adjust compensator 77A and 85A for minimum output. Now set the "Attenuator" and "Multiplier" controls for a weak signal; then re-adjust compensator 85B for maximum output.

h. The above adjustments are now checked for accuracy as follows:

Frequency Test:

With the 1000 K. C. signal tuned for maximum output turn the Magnetic Tuning control back and forth; that is, from the "out" to "in" position. The reading of the output meter should not change in either position. If the output meter reading changes, the above magnetic tuning circuit adjustments should be repeated.

A further check on the magnetic tuning adjustment is to very carefully tune in a broadcasting station and then turn the magnetic tuning switch from the "out" to the "in" position. With the switch in either position, the tone of the station should not change. If a change of tone or hiss develops repeat the above Magnetic Tuning Adjustments.

Sensitivity Test:

1. To check the magnetic tuning circuit for sensitivity, turn the magnetic tuning switch to the "off" position, and tune in the 1000 K. C. signal. Then adjust the "attenuator" control of the signal generator for a good audible signal,—approximately 20 volts on the output meter.

2. Now detune the signal (first above and then below the 1000 K. C. mark) to a point at which the signal is weakly heard. At each point turn the magnetic tuning control "ON". When the control is turned "ON" the signal should return to normal output strength. If the magnetic tuning circuit does not pull the signal into resonance, compensators 77A and 85A should be carefully readjusted.

PHILCO MODEL 38-620, CODE 121 and 125

Replacement Parts and Schematic Diagram

Codes 121 and 125 Receivers differ only in the Antenna tuning section of the R. F. Unit. See Schematic Diagram.

All part numbers are for Codes 121 and 125 unless otherwise stated.

Schem. No.	Description	Part No.	List Price
1	Antenna trans. Range 1 Code 125	32-2575	$0.70
1X	Antenna trans. Range 1 Code 121	32-2378	1.50
2	Antenna trans. Range 2 Code 125	32-2576	.70
2X	Antenna trans. Range 2 Code 121	32-2381	1.20
3	Antenna trans. Range 3 Code 125	32-2573	.70
3X	Antenna trans. Range 3 Code 121	32-2384	1.20
4	Compensator	31-6161	.30
5	Condenser .05 mfd. tubular	30-4444	.20
6	Resistor 51,000 ohms, ½ watt	33-351339	.20
7	Tuning condenser	31-1966	4.75
8	Condenser 35 mmfd. mica	30-1044	.20
9	R. F. trans. Range 1	32-2379	.40
10	R. F. trans. Range 2	32-2382	1.00
11	R. F. trans. Range 3	32-2385	1.20
12	Compensator	31-6204	....
13	Condenser .05 mfd. tubular	30-4123	.20
14	Condenser .05 mfd. tubular	30-4020	.20
15	Condenser .05 mfd. tubular	30-4020	.20
16	Resistor 100 ohms, ½ watt	33-110339	.20
17	Osc. trans. Range 1	32-2380	.50
18	Osc. trans. Range 2	32-2383	.70
19	Osc. trans. Range 3	32-2386	.70
20	Condenser 1605 mmfd. mica	31-6155	.40
21	Condenser 250 mmfd. mica	30-1032	.25
22	Resistor 10,000 ohms, ½ watt	33-310339	.20
23	Condenser 16 mfd. electrolytic	30-2212	1.05
24	Resistor 32,000 ohms, ½ watt	33-332339	.20
25	Condenser 4280 mfd. mica	31-6156	.60
26	Compensator (3 sections)	31-6171	.75
27	Compensator	31-6056	.55
28	Condenser .1 mfd. tubular	30-4455	.25
29	Resistor 20,000 ohms, 1 watt	33-320439	.20
30	Resistor 51,000 ohms, 1 watt	33-351439	.20
31	Resistor 1000 ohms, ½ watt	33-210339	.20
32	1st I. F. transformer	32-2580	2.20
33	2nd I. F. transformer	32-2582	2.20
33X	Resistor 51,000 ohms, ½ watt	33-351339	.20
34	Resistor 400 ohms, ½ watt	33-1211	.20
35	Condenser .25 mfd. tubular	30-4446	.25
36	Condenser 110 mmfd. mica	30-1031	.20
37	Resistor 490,000 ohms, ½ watt	33-449339	.20
38	Condenser .01 mfd. tubular	30-4479	.20
39	Condenser .015 mfd. tubular	30-4358	.20
40	Volume control	33-5158	1.00
41	Resistor 51,000 ohms, ½ watt	33-351339	.20
42	Resistor 1.0 meg., ½ watt	33-510339	.20
43	Condenser 110 mmfd. mica	30-1031	.20
44	Condenser .008 mfd. tubular	30-4112	.20
45	Condenser .1 mfd. tubular	30-4122	.20
46	Resistor 490,000 ohms, ½ watt	33-449339	.20
47	Resistor 1.0 meg.	33-510339	.20
48	Resistor 1.0 meg.	33-510339	.20
49	Condenser .015 mfd. tubular	30-4226	.20
50	Resistor 70,000 ohms, ½ watt	33-370339	.20
51	Resistor 9000 ohms, 2 watts	33-290539	.30
52	Resistor 1.0 meg., ½ watt	33-510339	.20
53	Output trans. (S7 speaker)	32-7019	.85
54	Cone and voice coil	36-3157	1.00
55	Condenser .03 mfd. bakelite	8328 SU	.35
56	Condenser .008 mfd. tubular	30-4317	.25
57	Condenser 8 mfd. electrolytic	30-2211	1.00
58	Resistor 202-8-35 ohms	33-3316	.35
59	Field coil assembly (S7)	36-3341	....
60	Condenser 12 mfd. electrolytic	30-2210	1.20
61	Power trans. (115v, 50-60 cyc.)	32-7583	4.50
	Power trans. (115v, 25-40 cyc.)	32-7584	6.50
	Power trans. (110v-220v) 50-60 cycles)	32-7585	6.50
62	Condenser .015 -.015 mfd.	3793 DG	.40
63	Power and tone switch	42-1182	.75
64X	Ant. wave switch, Code 121	42-1170	1.10
64	Ant. wave switch, Code 125	42-1374	....
65	R. F. wave switch	43-1314	.75
66	Osc. wave switch	42-1290	.75
67	Pilot lamp	34-2039	.09
	Bezel (Dial)	40-6118	....
	Bezel Gasket	27-8311	....
@	Bezel Glass	27-8298	....
	Bezel Ring	28-5078	....
	Dial Scale (Codes 121 & 125)	27-5285	....

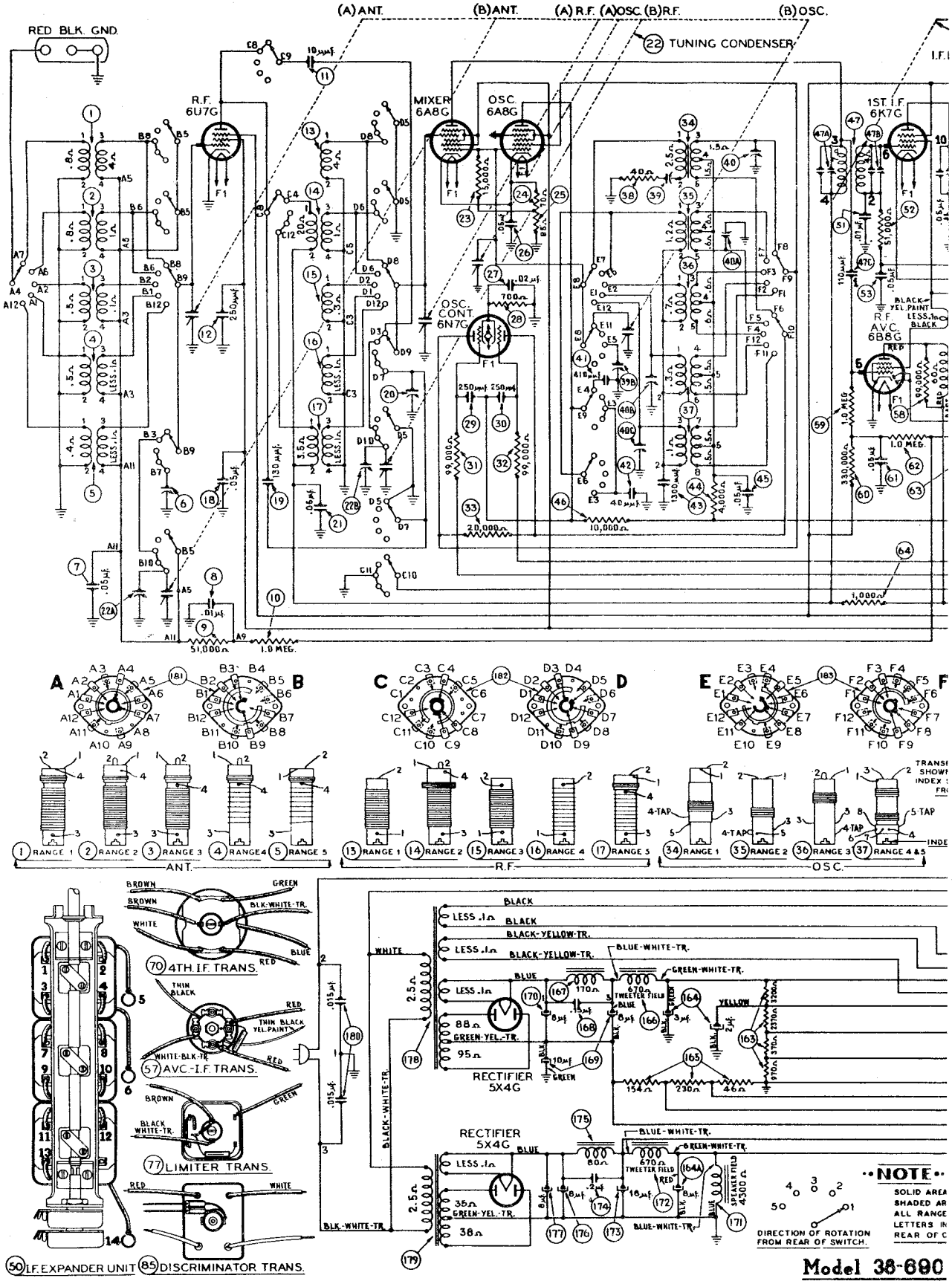

©John F. Rider, Publisher

O & TELEV. CORP.

MODEL 38-690(125)
Schematic, Coils

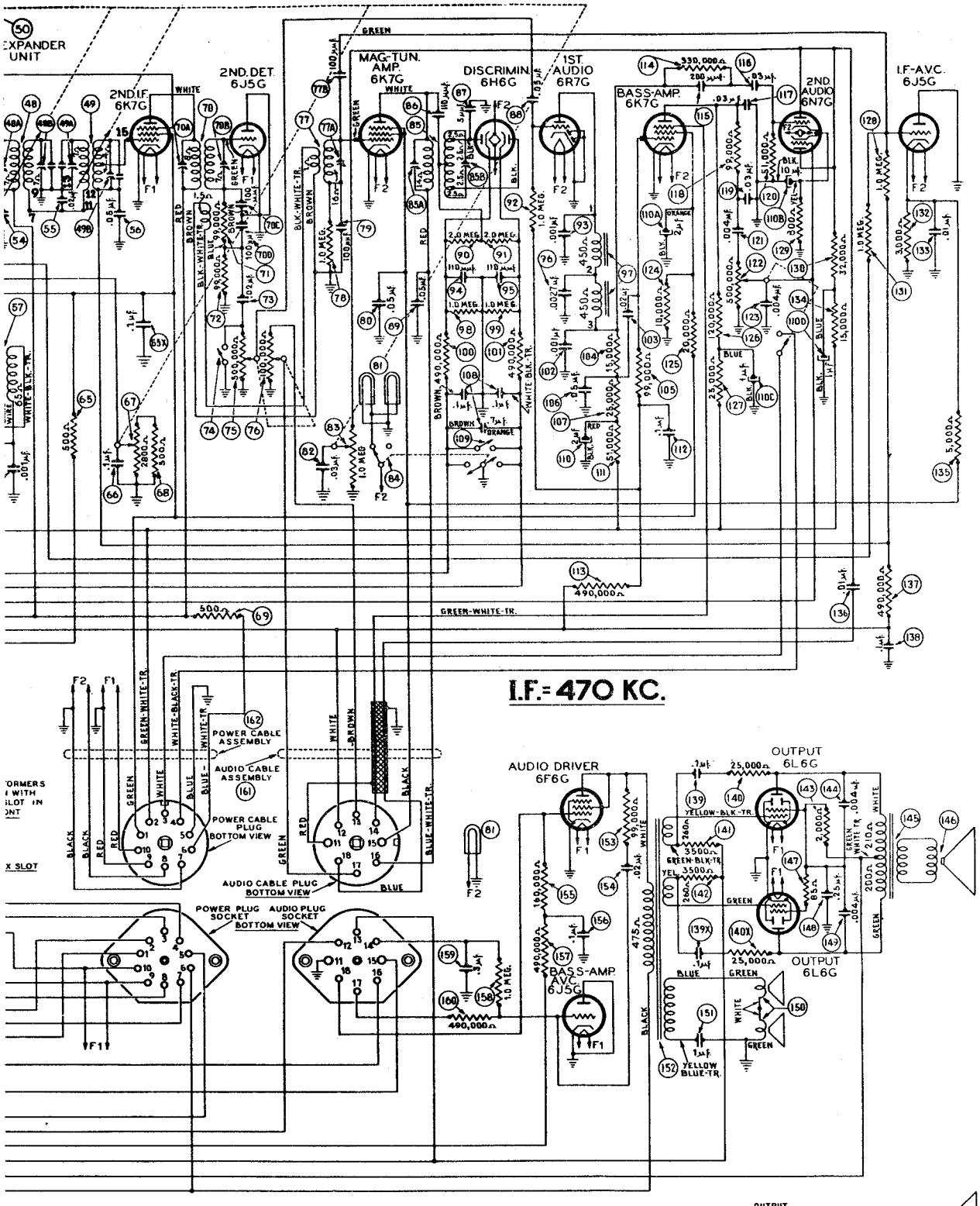

INDICATES RING AT REAR OF SWITCH WAFER.
EA INDICATES RING AT FRONT OF SWITCH WAFER.
SWITCHES SHOWN IN POSITION NO.1 (BROADCAST)
DICATE POSITION OF SWITCH WAFERS FROM
HASSIS, (BOTTOM VIEW)

Code 125

PHILCO RADIO & TELEV. CORP.

MODEL 38-690(125)
Chassis Layouts
Socket,Trimmers

NOTE "A"—Slowly shift signal generator indicator between 460 and 480 K. C. As the indicator is turned, two peaks will be noted on the Output Meter; one about 465 K. C. and the other about 475 K. C. These peaks should give the same deflection or reading on the output meter. If the peaks are unequal, Compensator 70 A must be slightly readjusted to the right or left (not more than ¼ of a turn) until the peaks are equalized. Each time the compensator is set in another position, rotate the signal generator through the 460 or 480 K. C. range and note the reading of each peak. This adjustment is used to compensate for slight differences between peaks. If the compensator must be turned more than ⅛ of a turn in either direction to equalize the peaks, all padders should be carefully readjusted as given under "Intermediate Frequency Circuit" adjustment procedure.

NOTE "B"—When adjusting the low frequency compensator of Range 1 (Broadcast) or the antenna and R. F. compensators of the high frequency tuning range, the receiver Tuning Condenser must be adjusted (rolled) as follows: First tune the compensator for maximum output, then vary the tuning condenser of the receiver for maximum output about the frequency dial mark being used. Now turn the compensator slightly to the right or left and vary the receiver tuning condenser for maximum output. If the out reading increases, turn the compensator in the same direction a trifle more, and again vary the tuning condenser for maximum output. If the output decreases, set the compensator in the opposite direction. This procedure of first setting the compensator and then varying the tuning condenser is continued until there is no further gain in output reading.

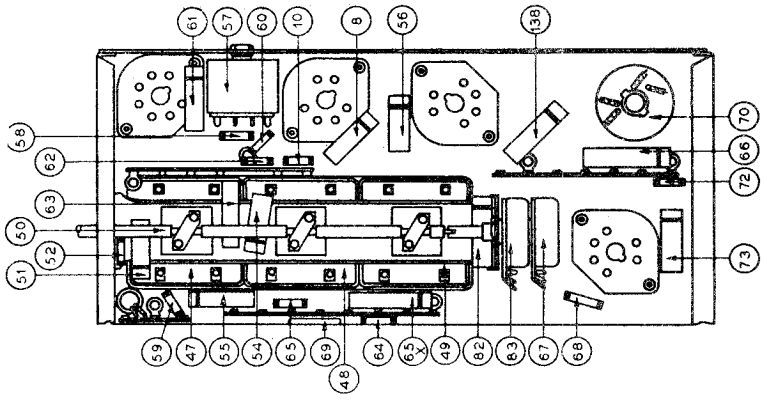

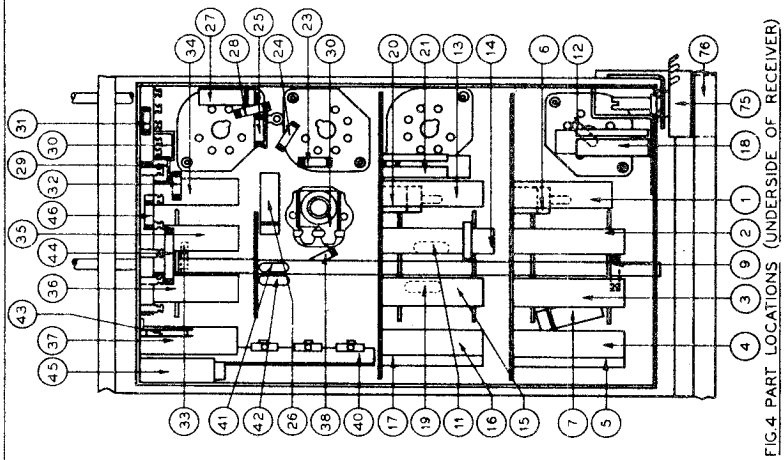

FIG.4 PART LOCATIONS (UNDERSIDE OF RECEIVER)

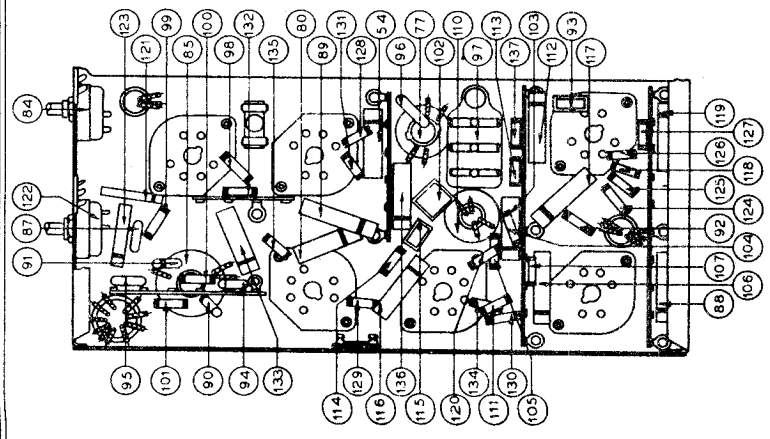

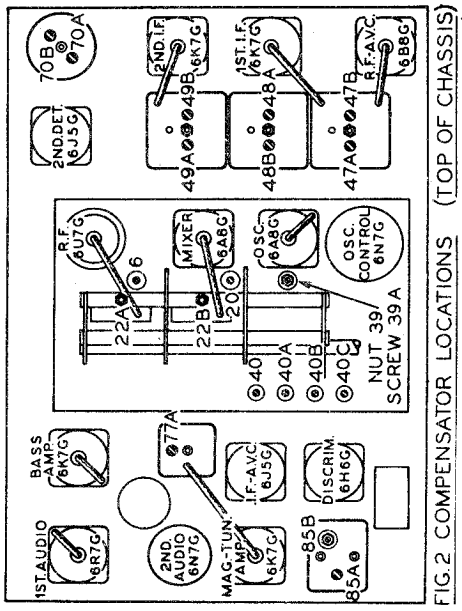

FIG.2 COMPENSATOR LOCATIONS (TOP OF CHASSIS)

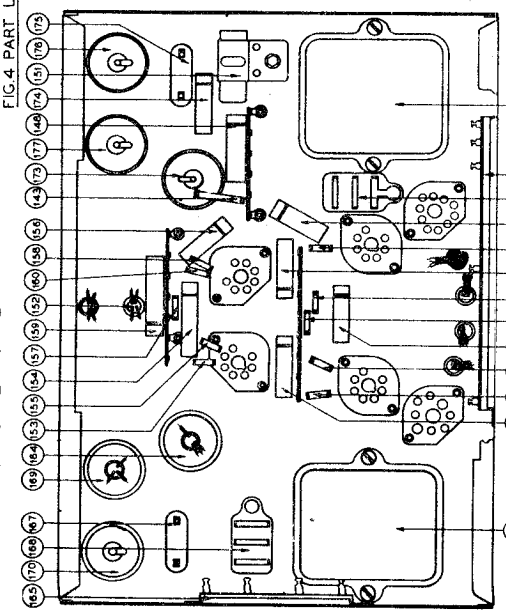

FIG.3 PART LOCATIONS (UNDERSIDE OF POWER UNIT)

©John F. Rider, Publisher

MODEL 38-690(125)
Parts List

PHILCO RADIO & TELEV. CORP.

Model 38-690—Code 125

REPLACEMENT PARTS

Schem. No.	Description	Part No.
1.	Ant. Trans. (Range 1)	32-2615
2.	Ant. Trans. (Range 2)	32-2616
3.	Ant. Trans. (Range 3)	32-2617
4.	Ant. Trans. (Range 4)	32-2618
5.	Ant. Trans. (Range 5)	32-2619
6.	Compensator (Range 5)	31-6084
7.	Condenser (.05 mf. tubular)	30-4519
8.	Condenser (.01 mf. tubular)	30-4514
9.	Resistor (51,000 ohms 1/2 watt)	33-351339
10.	Resistor (1.0 meg. 1/2 watt)	33-510339
11.	Condenser (10 mmf. mica)	30-1065
12.	Condenser (250 mmf. mica)	30-1032
13.	R.F. Trans. (Range 1)	32-2620
14.	R.F. Trans. (Range 2)	32-2621
15.	R.F. Trans. (Range 3)	32-2622
16.	R.F. Trans. (Range 4)	32-2623
17.	R.F. Trans. (Range 5)	32-2624
18.	Condenser (.05 mf. tubular)	30-4123
19.	Condenser (130 mmf. mica)	30-1036
20.	Compensator	31-6084
21.	Condenser (.05 mf. tubular)	30-4123
22.	Tuning Condenser	31-2036
23.	Resistor (15,000 ohms, 1/2 watt)	33-315339
24.	Resistor (70 ohms, 1/2 watt)	33-070339
25.	Resistor (85 ohms, 1/2 watt)	33-085339
26.	Condenser (.05 mfd. tubular)	30-4444
27.	Condenser (.02 mfd. tubular)	30-4215
28.	Resistor (700 ohms, 1/2 watt)	33-170339
29.	Condenser (250 mmf. mica)	30-1032
30.	Condenser (250 mmf. mica)	30-1032
31.	Resistor (99,000 ohms, 1/2 watt)	33-399339
32.	Resistor (99,000 ohms, 1/2 watt)	33-399339
33.	Resistor (20,000 ohms, 1/2 watt)	33-320339
34.	Osc. Trans. (Range 1)	32-2625
35.	Osc. Trans. (Range 2)	32-2626
36.	Osc. Trans. (Range 3)	32-2627
37.	Osc. Trans. (Ranges 4 & 5)	32-2628
38.	Resistor (40 ohms, 1/2 watt)	33-040339
39.	Compensator (2 sections)	31-6100
40.	Compensator (4 sections)	31-6200
41.	Condenser (410 mmf mica)	30-1089
42.	Condenser (40 mmf mica)	30-1095
43.	Condenser (1300 mmf mica)	31-6205
44.	Resistor (4,000 ohms, 1 watt)	33-240439
45.	Condenser (.05 mfd. tubular)	30-4123
46.	Resistor (10,000 ohms, 1/2 watt)	33-310339
47.	1st I.F. Trans.	32-2772
48.	2nd I.F. Trans.	32-2293
49.	3rd I.F. Trans.	32-2291
*50.	I.F. Expander Unit Assembly	38-9064
51.	Condenser (.01 mf. tubular)	30-4514
52.	Resistor (51,000 ohms, 1/2 watt)	33-351339
53.	Condenser (.05 mf. tubular)	30-4519
54.	Condenser (.05 mf. tubular)	30-4518
55.	Condenser (.02 mf. tubular)	30-4516
56.	Condenser (.05 mf. tubular)	30-4519
57.	1st A.V.C. I.F. Trans.	32-2769
58.	Resistor (99,000 ohms, 1/2 watt)	33-399339
59.	Resistor (1 meg. 1/2 watt)	33-510339
60.	Resistor (330,000 ohms, 1/2 watt)	33-433339
61.	Condenser (.05 mf. tubular)	30-4519
62.	Resistor (1.0 meg., 1/2 watt)	33-510339
63.	Condenser (.001 mf. tubular)	30-4453
64.	Resistor (1,000 ohms, 1/2 watt)	33-210339
65.	Resistor (500 ohms, 1/2 watt)	33-150339
65X	Condenser (.1 mf. tubular)	30-4455
66.	Condenser (.1 mf. tubular)	30-4499
67.	Potentiometer - dual (Contains 85)	33-5241
68.	Resistor (500 ohms, 1/2 watt)	33-150339
69.	Resistor (500 ohms, 1 watt)	33-1213
70.	4th I.F. Trans.	32-2765
71.	Resistor (99,000 ohms, 1/2 watt) Part of 70	
72.	Resistor (99,000 ohms, 1/2 watt)	33-399339
73.	Condenser (.02 mf. tubular)	30-4516
74.	Audio Shorting Switch - Part of Automatic Tuner - See parts (6) and (16) Service Bulletin 273)	
75.	Volume Control (dual)	33-5240
76.	Potentiometer - (Part of 75)	
77.	Limiter Trans. (Magnetic Tuning Circuit)	32-2767
78.	Resistor (1.0 meg. 1/2 w (Part of 77)	33-510339
79.	Condenser (100 mmf. - Part of 77)	
80.	Condenser (.05 mf. tubular)	30-4444
81.	Flood & Pilot lamps	34-2064
82.	Condenser (.03 mf. tubular)	30-4449
83.	Potentiometer (Part of 67)	
84.	A.F.C. switch	42-1216
85.	Discrim. Trans. (Magnetic Tuning Circuit)	32-2661
86.	Condenser (110 mmf. - Part of 85)	
87.	Condenser (5 mmf. mica)	30-1097
88.	Condenser (.05 mf. tubular)	30-4519
89.	Condenser (.05 mf. tubular)	30-4444
90.	Resistor (2.0 meg. 1/2 w)	33-520339
91.	Resistor (2.0 meg. 1/2 w)	33-520339
92.	Resistor (1.0 meg. 1/2 w)	33-510339
93.	Condenser (.001 mf. mica)	30-1007
94.	Condenser (110 mmf. mica)	30-1031
95.	Condenser (110 mmf. mica)	30-1031
96.	Condenser (.0027 mf. mica)	30-1096
97.	10 K.C. filter coil	32-2752
98.	Resistor (1.0 meg. 1/2 w)	33-510339
99.	Resistor (1.0 meg. 1/2 w)	33-510339
100.	Resistor (490,000 ohms, 1/2 w)	33-449339
101.	Resistor (490,000 ohms, 1/2 w)	33-449339
102.	Condenser (.001 mf. mica)	30-1007
103.	Condenser (.02 mf. tubular)	30-4516
104.	Resistor (15,000 ohms, 1/2 w)	33-315339
105.	Resistor (99,000 ohms, 1/2 w)	33-399339
106.	Condenser (.05 mf. tubular)	30-4518
107.	Resistor (25,000 ohms, 1/2 w)	33-325339
108.	Condenser (.1 - .1 - .7 mf.)	30-4542
109.	A.F.C. shorting switch (Part of Auto. Tuner-See Bulletin 273)	45-2330
110.	Electrolytic Cond. (2-2-1-1-10 mf)	30-2247
111.	Resistor (51,000 ohms, 1/2 w)	33-351339
112.	Condenser (.1 mf. tubular)	30-4499
113.	Resistor (490,000 ohms, 1/2 w)	33-449339
114.	Resistor (330,000 ohms, 1/2 w)	33-433339
115.	Condenser (200 mmf mica)	30-1047
116.	Condenser (.03 mf. tubular)	30-4449
117.	Condenser (.03 mf. tubular)	30-4449
118.	Resistor (99,000 ohms, 1/2 w)	33-399339
119.	Condenser (.03 mf tubular)	30-4449
120.	Resistor (51,000 ohms, 1/2 w)	33-351339
121.	Condenser (.004 mf. tubular)	30-4334
122.	Audio Bass Control and A.C. switch)	32-5247
123.	Condenser (.004 mf. tubular)	30-4334
124.	Resistor (10,000 ohms, 1/2 w)	33-310339
125.	Resistor (20,000 ohms, 1/2 w)	33-320339
126.	Resistor (120,000 ohms, 1/2 w)	33-412339
127.	Resistor (25,000 ohms, 1/2 w)	33-325339
128.	Resistor (1.0 meg. 1/2 w)	33-510339
129.	Resistor (800 ohms, 1/2 w)	33-180339
130.	Resistor (32,000 ohms, 1/2 w)	33-332339
131.	Resistor (1.0 meg. 1/2 w)	33-510339
132.	Resistor (3,000 ohms, 1/2 w)	33-230339
133.	Condenser (.01 mf. tubular)	30-4169
134.	Resistor (15,000 ohms, 1/2 w)	33-315339
135.	Resistor (5,000 ohms, 1/2 w)	33-250339
136.	Condenser (.01 mf. tubular)	30-4169
137.	Resistor (490,000 ohms, 1/2 w)	33-449339
138.	Condenser (.1 mf. tubular)	30-4499
139.	Condenser (.1 mf. tubular)	30-4455
139X	Condenser (.1 mf. tubular)	30-4455
140.	Resistor (25,000 ohms, 1/2 watt)	33-325339
140X	Resistor (25,000 ohms, 1/2 watt)	33-325339
141.	Resistor (3,500 ohms, 1/2 w)	33-235339
142.	Resistor (3,500 ohms, 1/2 w)	33-235339
143.	Resistor (2,000 ohms, 1 watt)	33-220439
144.	Condenser (.004 mf. tubular)	30-4185
145.	Output Trans.	32-7905
146.	Cone & Voice Coil Assembly (W6 Speaker)	36-3647
147.	Resistor (85 ohms, 1/2 w)	33-085339
148.	Condenser (.25 mf. tubular)	30-4134
149.	Condenser (.004 mf. tubular)	30-4185
150.	Cone & Voice Coil Assembly (C B Speaker)	36-3654
151.	Condenser (1 mf.)	30-4538
152.	Input Trans.	32-7876
153.	Resistor (99,000 ohms, 1/2 w)	33-399339
154.	Condenser (.02 mf. tubular)	30-4419
155.	Resistor (160,000 ohms, 1/2 w)	33-416339
156.	Condenser (.1 mf. tubular)	30-4499
157.	Resistor (490,000 ohms, 1/2 w)	33-449339
158.	Resistor (1.0 meg. 1/2 w)	33-510339
159.	Condenser (.3 mf. tubular)	30-4465
160.	Resistor (490,000 ohms, 1/2 w)	33-449339
161.	Audio Cable	41-3342
162.	Power Cable	41-3340
163.	Resistor (4 sections - wire wound)	33-3323
164.	Electrolytic Condenser (3-2-8 mf.)	30-2249
165.	Resistor (3 sections - wire wound)	30-3324
166.	Field Coil, CB2 Speaker	36-3995
167.	Choke	32-7115
168.	Condenser (.15 mf. bakelite)	628780
169.	Electrolytic Condenser (8-10 mf.)	30-2201
170.	Electrolytic Condenser (8 mf.)	30-2025
171.	Field (W6 speaker)	36-3782
172.	Field (CB2 speaker, (Same as 166)	
173.	Electrolytic Condenser (18 mf.)	30-2200
174.	Condenser (.2 mf. tubular)	30-4536
175.	Choke	32-7056
176.	Electrolytic Condenser (8 mf.)	30-2025
177.	Electrolytic Condenser (8 mf.)	30-2025
178.	Power Transformer (115 v - 60 cycles)	32-7888
	Power Transformer (115 v-25 to 40 cycles)	32-7889
	Power Transformer (115-230 v - 60 cycles)	32-7890
179.	Power Transformer (115 V-60 cycles)	32-7885
	Power Transformer (115-25 to 40 cycles)	32-7886
	Power Transformer (115-230V - 60 cycles)	32-7887
180.	Condenser (.015 mf. - .015 mf. bakelite)	379300
181.	Wave Switch (Ant)	42-1354
182.	Wave Switch (R.F.)	42-1355
183.	Wave Switch (Osc.)	42-1356

* I.F. Expander Unit Assembly contains (47), (48), (49), (67), (82) and (83)

©John F. Rider, Publisher

MODELS 38-22,38-23(121)

PHILCO RADIO & TELEV. CORP. Schematic,Coils

Copyright 1937 Philco Radio & Television Corporation

May, 1937

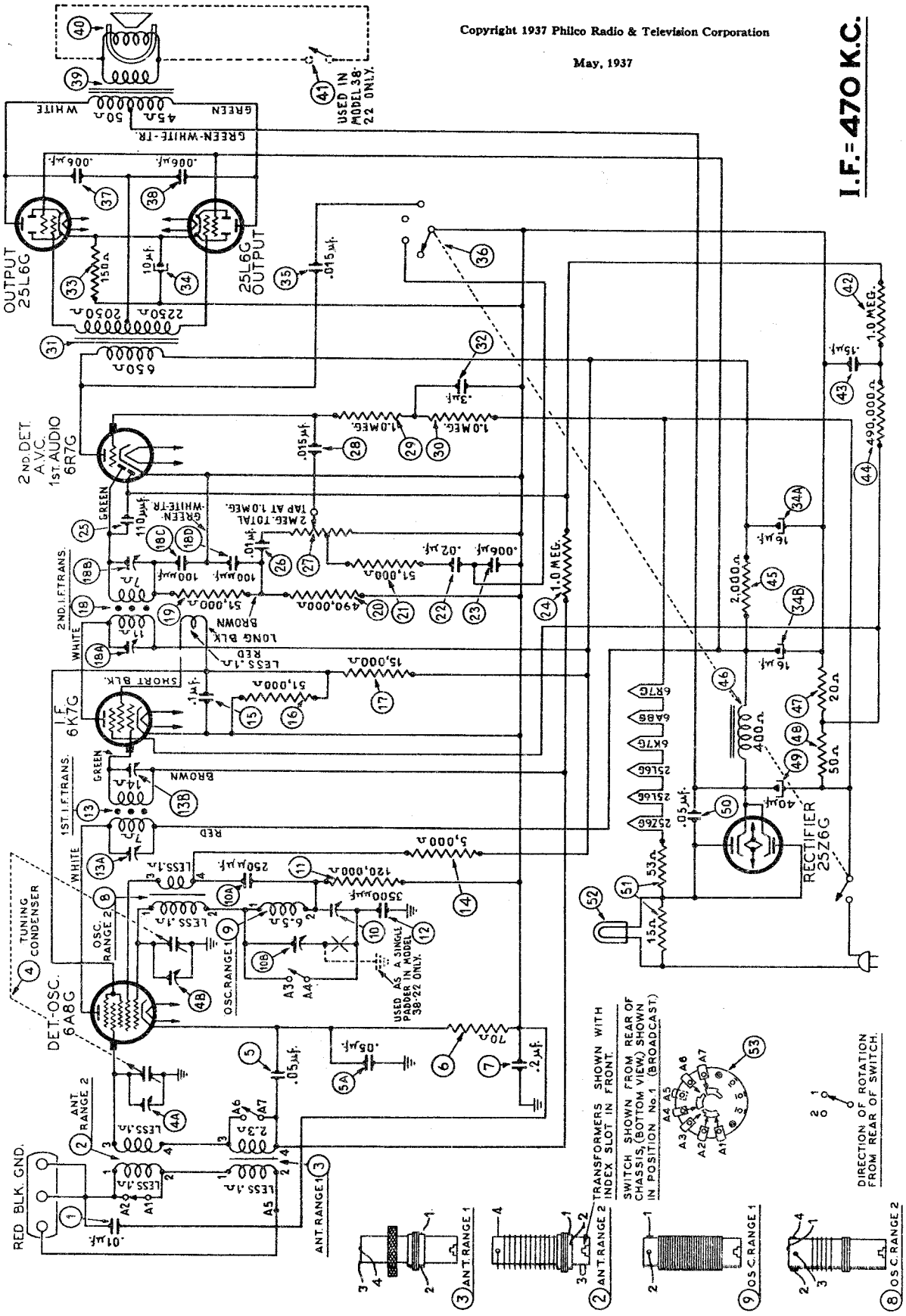

©John F. Rider, Publisher

MODELS 38-22,38-23(121) Chassis,Trimmers, Alignment

PHILCO RADIO & TELEV. CORP.

CABINETS & SPEAKERS:

Cabinet Type	Speaker Used	Model
K	HR-21	38-23
T	KR-28	38-22
T	KR-27	38-23
X	HR-21	38-23
XX	HR-22	38-22
CS	KR-28	38-22

Range Switch	Signal Generator and Receiver Dial	Compensators in Order
2	18 M. C.	(4B) See Note A
Tuning Range: 530 to 1720 K. C.		
Set the controls and adjust the R. F. compensators as follows:		
Range Switch	**Signal Generator and Receiver Dial**	**Compensators in Order**
1	1550 K. C.	(10B), (4A)
1	580 K. C.	(10)
1	1550 K. C.	(10B)

NOTE A—To accurately adjust the high frequency oscillator compensator to the fundamental instead of the image signal, turn the oscillator compensator to the maximum capacity position (clockwise). Now, slowly turn compensator counter-clockwise until a second maximum peak is obtained on the output meter. The second peak is the fundamental signal, and must be used in adjusting the receiver for maximum output. The first peak from maximum capacity position of the compensator is the image signal and must not be used in adjusting this compensator.

If the above procedure is correctly performed, the image signal will be found (much weaker) by turning the receiver dial 940 K. C. below the frequency being used on any high frequency range.

TYPE OF CIRCUIT: A six tube AC-DC operated superheterodyne circuit is incorporated in these receivers with features such as two tuning ranges; automatic volume control; bass compensation; and a push-pull pentode audio output circuit using beam power tubes.

The same circuit is used in both models. The features, however, such as the tuning mechanism, speakers and cabinets differ in each model.

Model 38-22, Code 121 employs the **Philco Cone-Centric Automatic Tuning Mechanism** and is assembled in cabinets types "XX" and "T". Model 38-22 assembled in a "CS" cabinet is identified as Code 124. A few parts of the Code 124 chassis differ from those of Code 121. These parts are listed on the parts list.

Model 38-23 tuning mechanism is of the manually operated type with vernier control. This receiver is assembled in cabinets types "T", "X" and "K" with KR27 and HR21 speakers.

POWER SUPPLY: 115 volts AC or DC.

For operation on a 220 volt power supply the line resistor must be changed. See parts list for part number.

INTERMEDIATE FREQUENCY: 470 K. C.

TUNING RANGE FREQUENCIES: Range 1—530 to 1720 K. C.
Range 2—5.7 to 18.0 M. C.

UNDISTORTED OUTPUT: 3.5 watts.

PHILCO TUBES USED: One 6A8G, Osc. 1st Det.; one 6K7G, I. F. Amp.; one 6R7G, 2nd Det. 1st Audio.; two 25L6G, Output, and one 25Z6G, Rectifier.

TONE CONTROL: Three positions.

Aerial Connections

To obtain the full advantage of the sensitivity of these receivers, the Philco High Efficiency Aerial Part No. 40-6112 must be used.

For attaching the aerial to the receiver a terminal panel is provided at the rear of the chassis. This panel contains three screw terminals marked "Red", "Blk" and "Gnd". Connect the red and black wires of the Philco High Efficiency Aerial transmission line to the "Red" and "Blk" terminals respectively.

If you use a temporary aerial, connect it to the "Red" terminal.

A good ground connection is necessary for best reception. The terminal marked "Gnd" should be connected to a water pipe or any other good ground source.

FOR CONE-CENTRIC TUNING MECHANISM—MODEL 22

Complete information for setting the stations on the cone-centric tuning mechanism of Model 38-22 is covered in the instruction Part No. (39-5533B) which is supplied with each set.

A few major assemblies of the automatic cone-centric tuning mechanism are listed on page 3 of this bulletin. A complete list of replacement parts, however, and detailed service data for the automatic mechanism, will be found in bulletin 282.

Fig. 4—Part Locations, Underside of Chassis

Alignment of Compensators

EQUIPMENT REQUIRED: (1) Signal Generator, using a fundamental frequency covering the intermediate frequency and tuning ranges of the receivers. Philco Model 077 Signal Generator which has a fundamental frequency range from 115 to 36000 K. C. is the correct instrument for this purpose; (2) Output meter, Philco Model 026 circuit tester incorporates a sensitive output meter and is recommended; (3) Philco Fibre Handle Screw Driver, part No. 27-7059 and Fibre Wrench Part No. 3164; (4) Philco Set Transformer, Part No. 32-2763.

OUTPUT METER: The 026 Output Meter is connected to the plate and cathode terminals of one of the 25L6G tubes. Adjust the meter to use the (0-30) volt scale and advance the attenuator control of the generator until a readable indication is noted on the output meter.

DIAL CALIBRATION: In order to adjust the receiver correctly the dial must be aligned to track properly with the tuning condenser. To adjust the dial of each model proceed as follows:

Model 38-22:

1. Loosen the shaft coupling set screws, using Wrench, Part No. 45-2481; then turn the tuning condenser to the maximum capacity position (plate fully meshed). Now turn the selector knob until the dial pointer is on the small black dot at the low frequency end of the Range One scale. With condenser and pointer set in this position, tighten set screws.

2. Now turn the selector knob (clockwise) until the dial pointer moves ⅛ of an inch from the small black dot (clockwise). See Fig. 5. Leave pointer in this position and loosen coupling set screws.

3. After loosening set screws, turn the selector knob until pointer is again on the small black dot at the low frequency end of Range One scale. Be careful when turning the selector kpob that the position of tuning condenser is not disturbed. Tighten coupling set screws with condenser and dial pointer in this position.

Model 38-23:

1. Turn the tuning condenser to maximum capacity position (plates fully meshed).

2. Loosen the clamp of dial, then turn the dial—being careful that position of tuning condenser is not disturbed—until the glowing indicator is centered on the middle index line at the low frequency end of Range One scale. See Fig. 6. Tighten the dial clamp in this position.

INTERMEDIATE FREQUENCY CIRCUIT

Note: Before the following adjustments are performed, the receiver must be turned on and allowed to heat for 15 minutes.

When adjusting the following compensators, a Philco Set Transformer Part No. 32-2763 must be connected in the signal generator output circuit as follows: Insert the signal generator output lead into the "Med" jack and the ground lead into the "Gnd" jack of the signal generator. Connect the other end of the output lead to terminal No. 1 on the Set Transformer and the cable ground to terminal No. 2. Terminals No. 3 and 4 of the Set Transformer are then connected to the chassis ground terminal and 6A8G grid respectively of the receiver with short pieces of wire. Insert a 0.1 mfd. in series with the No. 4 lead which connects to the grid.

1. Set Signal Generator at 470 K. C. Turn "Multiplier" Control to 1000 and the "Attenuator" for maximum output.

2. Turn the receiver dial to 580 K. C.

3. Receiver Volume Control maximum.

4. Range Switch Broadcast Position.

5. Adjust compensators (18B), (18A), (13B) and (13A) for maximum output.

If the output meter goes off scale when adjusting the compensators retard signal generator attenuator.

RADIO FREQUENCY CIRCUIT

Tuning Range: 5.7 to 18 M. C.

1. Remove terminal No. 4 lead of set transformer from the 6A8G grid and connect to the red terminal of the aerial panel of the receiver through a .1 mfd. condenser.

2. Leave the receiver volume control at maximum. Then set the controls and adjust the R. F. compensators as follows:

©John F. Rider, Publisher

PHILCO RADIO & TELEV. CORP.

MODELS 38-22,38-23(121)
Voltage,Socket,Trimmers
Tuner,Parts

Fig. 2—Cone-Centric Automatic Tuning Mechanism

Fig. 5—Dial Calibration Model 38-22

Fig. 6—Dial Calibration Model 38-23

REPLACEMENT PARTS—Models 38-22 & 38-23, Code 121

Schem. No.	Description	Part No.	List Price	Schem. No.	Description	Part No.	List Price
1	Condenser 0.01 mf. (tubular)	30-4479	$0.20	40	Cone and Voice Coil Assembly HR21, HR22	36-3797	
2	Antenna Transformer (Range 2)	32-2744	.70				
3	Antenna Transformer (Range 1)	32-2557	1.25	41	Audio Shorting Switch (Model 38-22, Part of Concentric Tuner)		
4	Tuning Condenser (38-23)	31-2026	5.00				
	Tuning Condenser (38-22)	31-2040	5.00	42	Resistor 1 meg. (½ watt)	33-510339	$0.20
5	Condenser 0.05 mf.—0.05 mf. (tubular)	30-4522	.35	43	Condenser 0.15 mf. (tubular)	30-4191	.25
6	Resistor 70 ohms (½ watt)	33-070339	.20	44	Resistor 490,000 ohms (½ watt)	33-449339	.20
7	Condenser 0.2 mf. (tubular)	30-4536		45	Resistor 2000 ohms (½ watt)	33-220339	.20
8	Osc. Transformer (Range 2)	32-2668	1.25	46	Filter Choke	32-7744	.10
9	Osc. Transformer (Range 1)	32-2559	.50	47	Resistor 20 ohms (½ watt)	33-020339	.20
10	Compensator (Model 38-23)	31-6188	.50	48	Resistor 50 ohms (½ watt)	33-1260	
	Compensator (Model 38-22)	31-6210	.40	49	Condenser 40 mf. (wet electrolytic 38-23)	30-2237	1.00
10a	Compensator (250 mmfd.) Part of 10				Condenser 40 mf. (dry electrolytic 38-22 Code 124)		
10b	Compensator (Model 38-22)	31-6206	.20	50	Condenser (0.05 mf. Bakelite)	30-2256	.35
11	Resistor 120,000 ohms (½ watt)	33-412339			Condenser (.05 mfd. 38-22, Code 124)	3615-SU	.35
12	Condenser (Model 38-22) 3500 mmf. (Mica)	30-1094	.40	51	Line Resistor, 110 Volt operation	3615-OSU	
	Condenser (Model 38-23) 3500 mmf. (Mica)	30-1094	.45	52	Pilot Lamp (38-22, 38-23)	33-3334	.15
13	1st I. F. Transformer	32-2580	2.20	53	Wave Switch	34-2184	.75
14	Resistor 5000 ohms (½ watt)	33-250339	.20		Cable (Power) 38-22 and 23, 121	42-1325	.40
15	Condenser 0.1 mf. (tubular)	30-4499	.20		Cable (Power) 38-22—Code 124	L-2778	.40
16	Resistor 51,000 ohms (½ watt)	33-351339	.20		Cable (Speaker) 38-22—Code 121	L-2183	
17	Resistor 15,000 ohms (½ watt)	33-315339	.20		Cable (Speaker) 38-22—Code 124	41-3372	
18	2nd I. F. Transformer	32-2676			Cable (Speaker) Model 38-23	41-3373	
19	Resistor 51,000 ohms (½ watt)	33-351339	.20		Dial (Model 38-22)	41-3336	
20	Resistor 490,000 ohms (½ watt)	33-449339	.20		Clip (R. F. Trans.)	27-5356	.02
21	Resistor 51,000 ohms (½ watt)	33-351339	.20		Dial (Model 38-23)	28-5002	.60
22	Condenser 0.02 mf. (tubular)	30-4215	.20		Dial Clamp (Model 38-23)	27-5327	.03
23	Condenser 0.006 mf. (tubular)	30-4467	.20		Dial Washer	28-5089	.03
24	Reastor 1 meg. (½ watt)	33-510339	.20		Knob (Model 38-23) Tuning	27-4598	.10
25	Condenser 110 mmf. (mica)	30-1031	.20		Knob (Model 38-23) Vernier	27-4330	.10
26	Condenser 0.01 mf. (tubular)	30-4479	.20		Knob (Model 38-23) Tone & Volume	27-4331	.10
27	Volume Control	33-5228			Insulator (Volume Control)	27-4333	.10
28	Condenser 0.015 mf. (tubular)	30-4358	.20		Mtg. Rubber (Chassis)	27-6876	.10
29	Resistor 1 meg. (½ watt)	33-510339	.20		Mtg. Rubber (Tuning Condenser)	27-4564	.05
30	Resistor 1 meg. (½ watt)	33-510339	.20		Pilot Lamp Assembly (38-23)	27-4596	.04
31	Input Transformer	32-7849	3.00		Screen (38-23)	28-8068	.45
32	Condenser (0.3 mf., bakelite)	6287-ODU	.40		Socket (7 prong)	27-5320	.10
33	Resistor 150 ohms	33-1270			Socket (6 prong)	27-6087	.11
34	Electrolytic Condenser 16, 16, 10 mf.	30-2239	2.00		Socket (6 prong)	27-6086	.11
35	Condenser 0.015 mf. (tubular)	30-4226	.20		Vernier Drive (38-23)	27-6057	.11
36	Tone Control & Off-On Switch	42-1381				31-2072	1.00
37	Condenser 0.006 mf. (tubular)	30-4445	.20		**38-22 Cone-centric Dial Parts**		
38	Condenser 0.006 mf. (tubular)	30-4445	.20		Brace Mtg. Unit	28-5475	.60
39	Output Transformer KR28, KR27, HR21, HR22	32-7863	1.60		Bearing (Main Shaft)	28-7242	1.20
	Cone and Voice Coil Assembly (KR27, KR28)	36-3540	1.00		Bezel Assembly (scale)	40-6136	
					Coupling (Tuner to Condenser)	31-2056	
					Cone-Centric Tuner Complete	31-2103	

Schem. No.	Description	Part No.	List Price
	Dial Retaining Ring	28-5107	$0.10
	Dial Lamp Socket Assembly	38-9231	.90
	Escutcheon Ring (Cabinet)	28-5128	
	Gasket (Escutcheon)	27-8893	
	Gear, Tuning Condenser (small)	45-2480	.60
	Gear, Tuning Condenser (large)	45-2491	.90
	Insulator (Tuner Brace)	27-9088	
	Insulator (Tuner)	27-8086	
	Knob (Tuning, Small)	27-4572	.10
	Knob (Vernier, Large)	45-2477	
	Knob (Spring)	28-8761	.04
	Knob Retaining Screw	28-5672	.10
	Pilot Lamp Assembly (38-22)	38-9232	.25
	Pointer Assembly	38-8925	
	Reflector Assembly	45-2478	
	Selector Crank Assembly	45-2476	
	Shaft (Coupling)	29-6676	
	Stop Assembly	31-2065	
	Stop Cover Ring (Mtd. on Selector Crank)	28-5088	.70
	Terminal Panel (Ant.)	38-8746	.15
	Wrench (Setting stations)	45-2475	.45
	38-22T CABINET		
	Speaker KR28	36-1377	
	38-22XX CABINET		
	Speaker HR22	36-1378	
	38-23T CABINET		
	Speaker KR27	36-1360	.90
	Bezel Frame Assembly	40-6124	.01
	Bezel Gasket	27-8311	.01
	Bezel Glass	27-8298	.05
	Bezel Ring	28-5078	.55
	38-23 "X" and "K" CABINETS		
	Speaker HR21	36-1352	
	Bezel Frame Assembly	40-6123	
	Bezel Gasket	27-8318	per C .50
	Bezel Glass	27-8300	.06
	Bezel Ring	28-5080	.70
	38-23F CABINET		
	Bezel Frame Assembly	40-6126	1.00
	Bezel Gasket	27-8312	.01
	Bezel Glass	27-8299	.06
	Bezel Ring	28-5079	.60

Prices subject to change without notice.

Fig. 1—Socket Voltages, Underside of Chassis

The voltages indicated by arrows were measured with a Philco 026 Circuit Tester which contains a sensitive voltmeter. Volume Control at minimum, range switch in broadcast position, line voltage 115 A. C.

Fig. 7—Locations of Compensators

©John F. Rider, Publisher

MODEL 920
Schematic, Parts
Chassis Layout

PHILCO RADIO & TELEV. CORP.

FEBRUARY 15, 1938

PHILCO MODEL 920

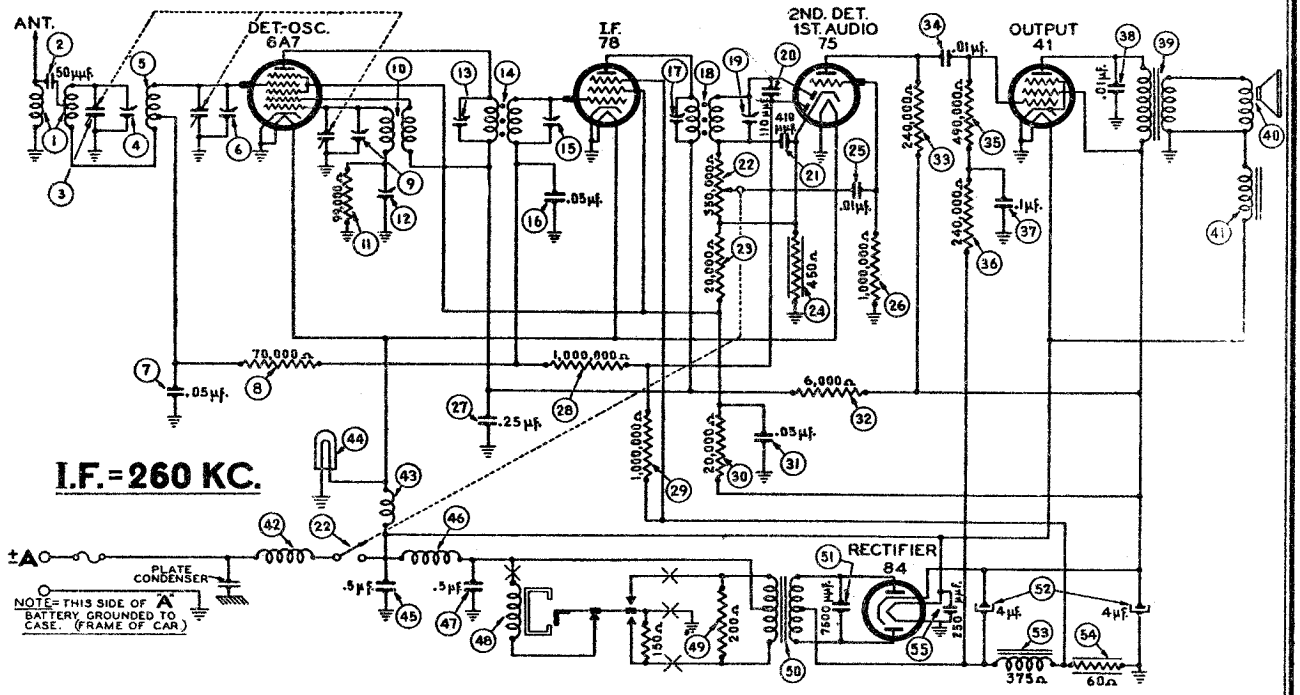

FIGURE 1

MODEL 920 PARTS LIST

No.	Description	Part No.
①	Antenna Transformer	32-2988
②	Condenser (50 mmfd.)	30-1101
③	Tuning Condenser	31-2224
④	First Padder (on Tun. Cond.)	
⑤	R. F. Transformer	32-2986
⑥	Second Padder (on Tun. Cond.)	
⑦	Condenser (.05 mfd.)	30-4020
⑧	Resistor (70,000 ohms)	33-370344
⑨	Third Padder (on Tun. Cond.)	
⑩	Oscillator Transformer	32-2987
⑪	Resistor (99,000 ohms)	33-399344
⑫	Low Fequency Padder	31-6252
⑬	Padder (Pri. 1st I. F. Trans.)	
⑭	First I. F. Transformer	32-2994
⑮	Padder (Sec. 1st I. F. Trans.)	
⑯	Condenser (.05 mfd.)	30-4020
⑰	Padder (Pri. 2nd I. F. Trans.)	
⑱	Second I. F. Transformer	32-2995
⑲	Padder (Sec. 2nd I. F. Trans.)	
⑳	Condenser (110 mmfd.)	30-1031
㉑	Condenser (410 mmfd.)	30-1089
㉒	Volume Control & Switch Assem. (350,000 ohms)	33-5269
㉓	Resistor (20,000 ohms)	33-320344
㉔	Resistor (450 ohms)	33-145341
㉕	Condenser (.01 mfd.)	30-4479
㉖	Resistor (1,000,000 ohms)	33-510344
㉗	Condenser (.25 mfd.)	30-4448
㉘	Resistor (1,000,000 ohms)	33-510344
㉙	Resistor (1,000,000 ohms)	33-510344
㉚	Resistor (20,000 ohms)	33-320447
㉛	Condenser (.05 mfd.)	30-4569
㉜	Resistor (6,000 ohms)	33-260344
㉝	Resistor (240,000 ohms)	33-424344
㉞	Condenser (.01 mfd.)	30-4145
㉟	Resistor (490,000 ohms)	33-449344
㊱	Resistor (240,000 ohms)	33-424344
㊲	Condenser (.1 mfd.)	30-4499
㊳	Condenser (.01 mfd.)	30-4381
㊴	Output Transformer	32-7961
㊵	Cone & Voice Coil Assembly	45-1344
㊶	Field Coil	32-9484
㊷	"A" Choke	32-1644
㊸	Filament Choke	32-1644
㊹	Pilot Lamp	34-2061
㊺	Condenser (.5 mfd.)	30-4551
㊻	Vibrator Choke	32-3003
㊼	Condenser (.5 mfd.)	30-4565
㊽	Vibrator	41-3398
㊾	Resistor (200 ohms)	33-120344
㊿	Power Transformer	32-7962
(51)	Condenser (7,500 mmfd.)	30-4567
(52)	Filter Condenser (4-4 mfd.)	30-2311
(53)	Filter Choke	32-7960
(54)	Resistor (60 ohms)	33-060331
(55)	Condenser (250 mmfd.)	30-1032
	Tuning & Volume Knob	27-4737
	Pointer	28-5781
	Dial & Bracket Assembly	42-5844
	Glass	27-9107
	Bezel	28-5764
	Housing Cover	38-9505
	Four Prong Socket	27-6044
	Five Prong Socket	27-6035
	Six Prong Socket	27-6036
	Seven Prong Socket	27-6037
	Fuse	7227
	Fuse Insulator	27-7729
	Carriage Bolt	W-1983
	Radio Mtg. Bolt	W-1984
	Radio Mtg. Nut	W-55
	Radio Mtg. Nut	W-1687
	Distributor Resistor	33-1196
	Interference Condenser	30-4007
	Set Mounting Bracket (short)	28-5853
	Set Mounting Bracket (long)	28-5744

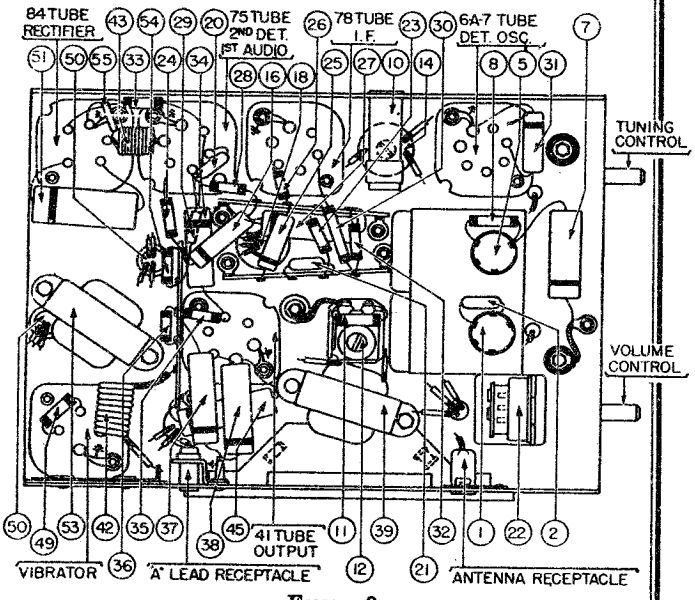

FIGURE 2

©John F. Rider, Publisher

©John F. Rider, Publisher

921 & 922 (Run NO.2)

I. F. TRANSFORMERS AND PADDERS

The I. F. transformers are assembled complete with padding condensers.

Both the primary and the secondary padders are placed side by side in the top of the transformer shield can. The adjusting screws are accessible thru the holes in the top of the shield. (See Figure 4).

The coil windings terminate in leads instead of terminals or lugs. The color scheme of the leads is given in Figure 8.

FIGURE 8

If replacements are ever necessary, replace the entire coil assembly, 32-3074 for the first I. F. stage and 32-3076 for the second I. F. stage. Neither the coil nor the padders will be furnished separately. Order only by the above numbers.

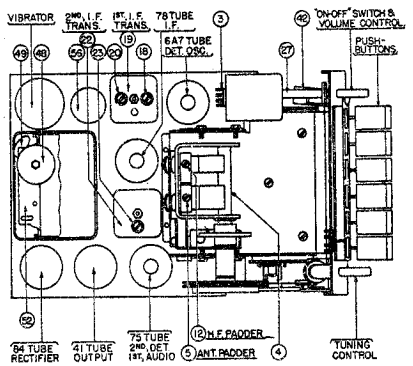

FIGURE 4

ADJUSTMENTS

All padding adjustments are carefully made at the factory and ordinarily no readjustments are necessary. However, when readjustments are required, the procedure given below must be followed in detail.

Equipment — Fully charged heavy duty storage battery or 6-volt power pack, 048A or 099 Philco Set Tester, 27-7159 Padding screw driver.

General — The output meter must be connected by means of an adapter to the plate of the type 41 output tube and to the Radio chassis.

With the Radio and signal generator set up for operation at the prescribed frequency, turn the Radio volume control on full and set the signal generator attenuator so that a half scale reading is obtained on the output meter. The signal in the speaker should be audible but not loud.

The shielding on the signal generator output lead must be connected to the Radio housing.

OPERATION	SIGNAL GENERATOR FREQUENCY	SIGNAL GENERATOR CONNECTION	DUMMY CAPACITY	SPECIAL INSTRUCTIONS	ADJUST PADDER
1	470 K.C.	To Antenna Receptacle on Radio	50 Mmfd. See Note 1	Turn Tuning Condenser Plates Out of Mesh as Far as They Will Go.	22 18 20 23
2	1550 K.C.	To Antenna Receptacle on Radio	50 Mmfd. See Note 1	Note 2	12
3	1360 K.C.	To Antenna Receptacle on Radio	50 Mmfd. See Note 1	Set Tuning Condenser at 1360 K. C.	5 Note 3
4	590 K.C.	To Antenna Receptacle on Radio	50 Mmfd. See Note 1	Set Tuning Condenser at 590 K. C.	6 Antenna Compensator

Make all adjustments for maximum reading on the output meter.

NOTE 1 — Connect the antenna lead, Part No. 41-3191, to the antenna receptacle in the radio. Connect a 50 Mmfd. Condenser in series between the signal generator and the antenna lead.

NOTE 2 — Turn the condenser rotor plates completely out of mesh. Use a piece of bond letterhead paper as a gauge between the heel of the rotor plates and the stator plates of the oscillator section of the tuning condenser, and turn the condenser plates in mesh until they strike the paper.

NOTE 3 — When the antenna stage adjustment is made with the Radio installed in the car, the Radio antenna lead must be connected to the car antenna in the usual manner. Connect the signal generator output lead to a wire placed near the car antenna but not connected to it.

MODEL 920

I. F. TRANSFORMERS AND PADDERS

The I. F. transformers are assembled complete with padding condensers.

Both the primary and the secondary padders are placed side by side in the top of the transformer shield can. The adjusting screws are accessible thru the holes in the top of the shield. (See Figure 4).

The coil windings terminate in leads instead of terminals or lugs. The color scheme of the leads is given in Figure 3.

FIGURE 3

If replacements are ever necessary, replace the entire coil assembly, 32-2994 for the first I. F. stage and 32-2995 for the second I. F. stage. Neither the coil nor the padders will be furnished separately. Order only by the above numbers.

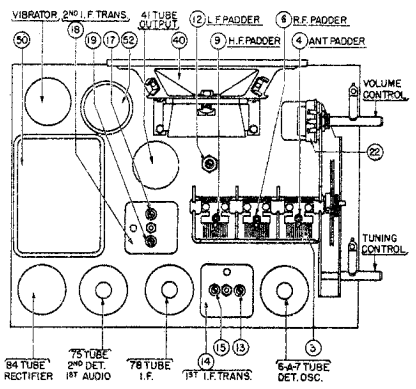

FIGURE 4

MODEL 920 ADJUSTMENTS

All padding adjustments are carefully made at the factory and ordinarily no readjustments are necessary. However, when readjustments are required, the procedure given below must be followed in detail.

Equipment — Fully charged heavy duty storage battery or 6-volt power pack, 048A or 099 Philco Set Tester, 8164 Padding wrench, 27-7159 Padding screw driver.

General — The output meter must be connected by means of an adapter to the plate of the type 41 output tube and to the Radio chassis.

With the Radio and signal generator set up for operation at the prescribed frequency, turn the Radio volume control on full and set the signal generator attenuator so that a half scale reading is obtained on the output meter. The signal in the speaker should be audible but not loud.

The shielding on the signal generator output lead must be connected to the Radio housing.

OPERATION	SIGNAL GENERATOR FREQUENCY	SIGNAL GENERATOR CONNECTION	DUMMY CAPACITY	SPECIAL INSTRUCTIONS	ADJUST PADDER
1	260 K. C.	To grid of 6A7 Tube	.1 Mfd. Condenser in Series with Generator Lead	No Antenna Connection	17 18 14 16 17
2	1550 K. C.	To Antenna Receptacle on Radio	50 Mmfd. See Note 1	Turn Tuning Condenser Plates Out of Mesh as Far as They Will Go.	9 6 4
3	580 K. C.	To Antenna Receptacle on Radio	50 Mmfd. See Note 1	Set Tuning Condenser at 580 K. C.	Note 2 12
4	1550 K. C.	To Antenna Receptacle on Radio	50 Mmfd. See Note 1	Turn Tuning Condenser Plates Out of Mesh as Far as They Will Go.	9
5	1400 K. C.	To Antenna Receptacle on Radio	50 Mmfd. See Note 1	Set Tuning Condenser at 1400 K. C.	6 4 Note 3

Make all adjustments for maximum reading on the output meter.

NOTE 1 — Connect the antenna lead, Part No. 41-3191, to the antenna receptacle in the radio. Connect a 50 Mmfd. Condenser in series between the signal generator and the antenna lead.

NOTE 2 — Rock the tuning condenser while adjusting the low frequency padder. Tune the condenser to the signal and adjust the padder for maximum output. Rotate the tuning condenser back and forth slightly for maximum output. Then re-adjust the padder for maximum output. Repeat this procedure until no further improvement is noticed.

NOTE 3 — When the antenna stage adjustment is made with the Radio installed in the car, the Radio antenna lead must be connected to the car antenna in the usual manner. Connect the signal generator output lead to a wire placed near the car antenna but not connected to it.

MODELS 921,922(Run2)
Schematic,Parts
Chassis Layout

PHILCO RADIO & TELEV. CORP.

MODELS 921 and 922 (Run No. 2)

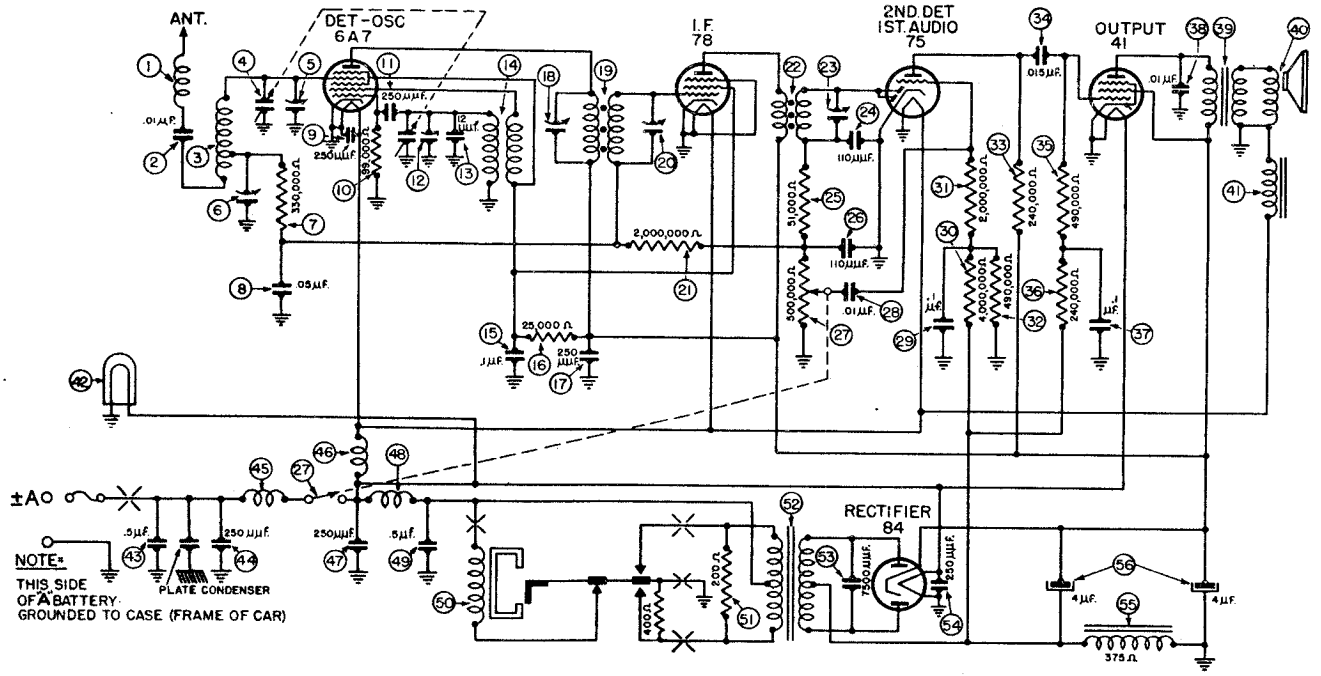

FIGURE 1

PARTS LIST

No.	Description	Part No.
①	Antenna Choke	77-0050
②	Condenser (.01 Mfd.)	30-4479
③	Antenna Transformer	32-3037
④	Tuning Condenser	31-2288
⑤	First Padder (on Tun. Cond.)	
⑥	Antenna Compensator	31-6260
⑦	Resistor (330,000 ohms)	33-433344
⑧	Condenser (.05 mfd.)	30-4519
⑨	Condenser (250 mmfd.)	30-1032
⑩	Resistor (99,000 ohms)	33-399344
⑪	Condenser (250 mmfd.)	30-1032
⑫	Second Padder (on Tun. Cond.)	
⑬	Condenser (12 mmfd.)	61-0007
⑭	Oscillator Transformer	32-3025
⑮	Condenser (.1 mfd.)	30-4455
⑯	Resistor (25,000 ohms)	33-325544
⑰	Condenser (250 mmfd.)	30-1032
⑱	Padder (Pri. 1st I.F. Trans.)	
⑲	First I. F. Transformer	32-3074
⑳	Padder (Sec. 1st I.F. Trans.)	
㉑	Resistor (2,000,000 ohms)	33-520344
㉒	Second I. F. Transformer	32-3076
㉓	Padder (Sec. 2nd I. F. Trans.)	
㉔	Condenser (110 mmfd.)	30-1031
㉕	Resistor (51,000 ohms)	33-351344
㉖	Condenser (110 mmfd.)	30-1031
㉗	Volume Control (500,000 ohms) and On-Off Switch	33-5278
㉘	Condenser (.01 mfd.)	30-4479
㉙	Condenser (.1 mfd.)	30-4499
㉚	Resistor (4,000,000 ohms)	33-540344
㉛	Resistor (2,000,000 ohms)	33-520344
㉜	Resistor (490,000 ohms)	33-449344
㉝	Resistor (240,000 ohms)	33-424344
㉞	Condenser (.015 mfd.)	30-4226
㉟	Resistor (490,000 ohms)	33-449344
㊱	Resistor (240,000 ohms)	33-424344
㊲	Condenser (.1 mfd.)	30-4499
㊳	Condenser (.01 mfd.)	30-4501
㊴	Output Transformer	32-8000
㊵	Cone and Voice Coil	45-2707
㊶	Field Coil	Not replacable
㊷	Pilot Lamp	34-2064
㊸	Condenser (.5 mfd.)	30-4491
㊹	Condenser (250 mmfd.)	30-1032
㊺	"A" Choke	32-1644
㊻	Filament Choke	32-1644
㊼	Condenser (250 mmfd.)	30-1032
㊽	Vibrator Choke	32-3003
㊾	Condenser (.5 mfd.)	30-4565
㊿	Vibrator	41-3398
(51)	Resistor (200 ohms)	33-120344
(52)	Power Transformer	32-7962
(53)	Condenser (7500 mmfd.)	30-4567
(54)	Condenser (250 mmfd.)	30-1032
(55)	Filter Choke	32-7960
(56)	Filter Condenser (4-4 mmfd.)	30-2329
	Tuning and Volume Knob	27-4761
	Pointer	28-5969
	Fuse	7227
	Fuse Insulator	27-7729
	Glass	55-0020

I.F. = 470 K.C.

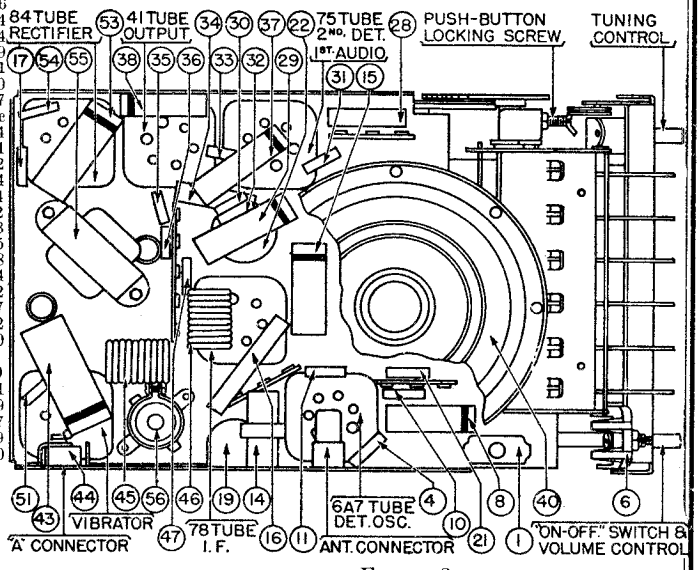

FIGURE 2

BASE VIEW OF MODEL 922
Model 921 similar except there is no provision for automatic tuning

JUNE 1938

©John F. Rider, Publisher

PHILCO RADIO & TELEV. CORP.

MODEL 926
Schematic
Chassis, Parts

MARCH 1, 1938

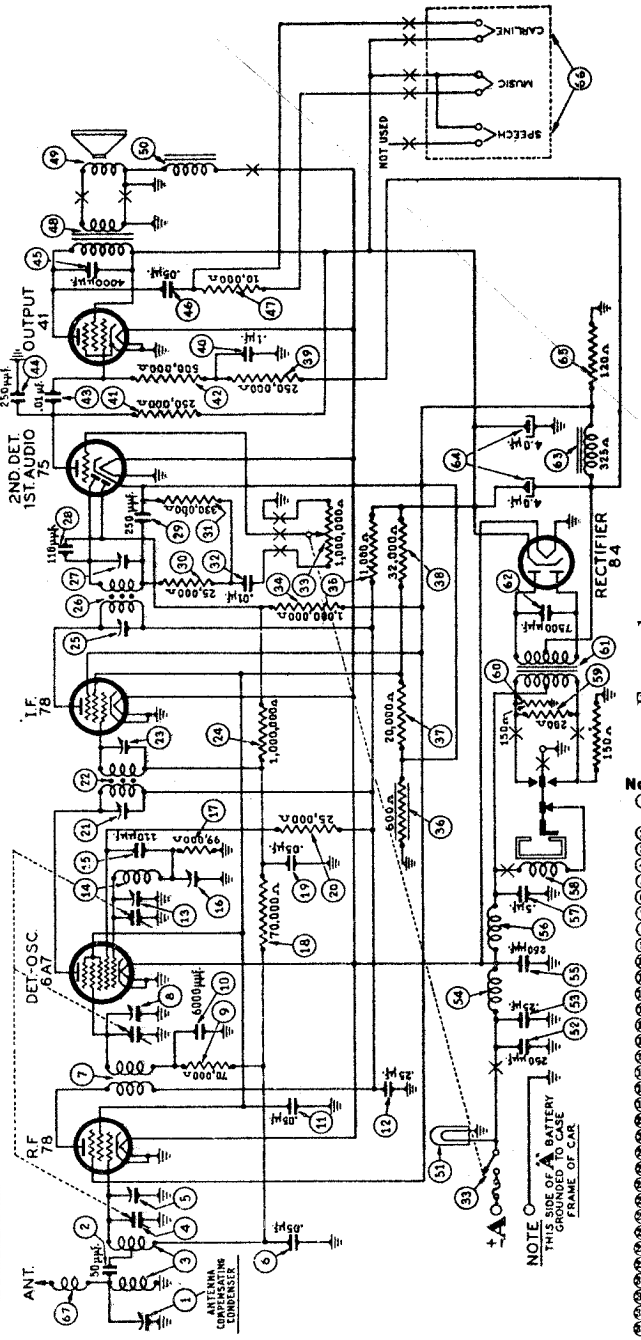

FIGURE 1

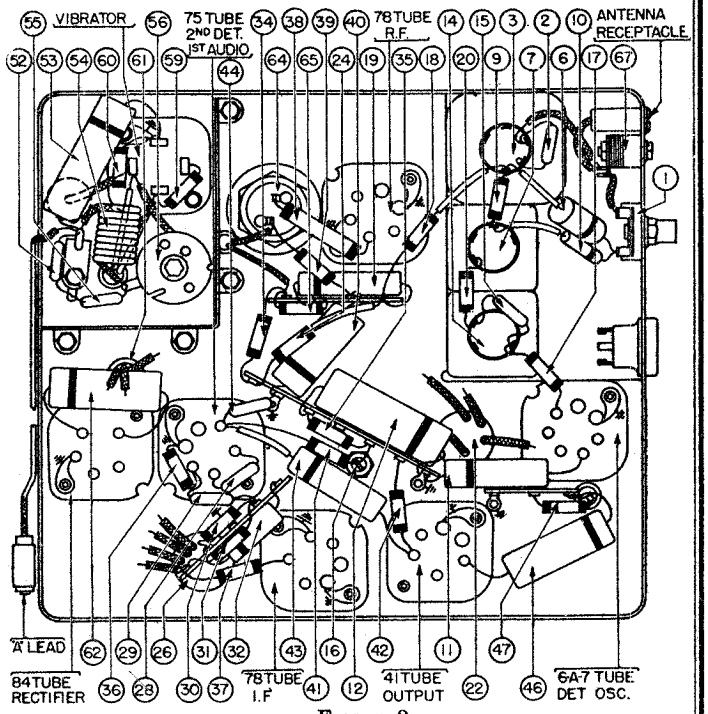

FIGURE 2

I.F.=260 K.C.

MODEL 926 PARTS LIST

No.	Description	Part No.
⊖	Antenna Compensating Condenser	31-6248
2	Condenser (50 mmfd.)	30-1101
3	Antenna Transformer	32-2945
4	Tuning Condenser	31-2238
5	First Padder (on Tun. Cond.)	
6	Condenser (.05 mfd.)	30-4444
7	R. F. Transformer	32-2946
8	Second Padder (on Tun. Cond.)	
9	Resistor (70,000 ohms)	33-370344
10	Condenser (6000 mmfd.)	30-4467
11	Condenser (.05 mfd.)	30-4020
12	Condenser (.25 mfd.)	30-4448
13	Third Padder (on Tun. Con.)	
14	Oscillator Transformer	32-2947
15	Condenser (110 mmfd.)	30-1031
16	Low Frequency Padder	31-6230
17	Resistor (99,000 ohms)	33-399344
18	Resistor (70,000 ohms)	33-370344
19	Condenser (.05 mfd.)	30-4020
20	Resistor (25,000 ohms)	33-325344
21	Padder (Pri. 1st. I. F. Trans.)	
22	First I. F. Transformer	32-3013
23	Padder (Sec. 2nd I. F. Tans.)	
24	Resistor (1,000,000 ohms)	33-510344
25	Padder (Pri. 2nd I. F. Trans.)	
26	Second I. F. Transformer	32-3014
27	Padder (Sec. 2nd I. F. Trans.)	
28	Condenser (110 mmfd.)	30-1031
29	Condenser (250 mmfd.)	30-1032
30	Resistor (25,000 ohms)	33-325344
31	Resistor (330,000 ohms)	33-433344
32	Condenser (.01 mfd.)	30-4479
33	Volume Control (1,000,000 ohms) and "On-Off" Switch	33-5268
34	Resistor (1,000,000 ohms)	33-510344
35	Resistor (1,000 ohms)	33-210344
36	Resistor (600 ohms)	33-160331
37	Resistor (20,000 ohms)	33-320344
38	Resistor (32,000 ohms)	33-332444
39	Resistor (250,000 ohms)	33-424344
40	Condenser (.1 mfd.)	30-4122
41	Resistor (250,000 ohms)	33-424344
42	Resistor (500,000 ohms)	33-449344
43	Condenser (.01 mfd.)	30-4145
44	Condensers (250 mmfd.)	30-1032
45	Condensers (4,000 mmfd.)	30-4185
46	Condensers (.05 mfd.)	30-4454
47	Resistor (10,000 ohms)	33-310344
48	Output Transformer	32-7956
49	Cone and Voice Coil	45-2608
50	Field Coil Assembly	32-9263
51	Pilot Lamp	34-2040
52	Condenser (250 mmfd.)	30-1032
53	Condenser (.25 mfd.)	30-4446
54	"A" Choke	32-1374
55	Condenser (250 mmfd.)	30-1032
56	Vibrator Choke	32-2911
57	Condenser (.5 mfd.)	30-4474
58	Vibrator	41-3170-3
59	Resistor (200 ohm)	33-120344
60	Resistor (150 ohms)	33-115344
61	Power Transformer	32-7958
62	Condenser (7500 mmfd.)	30-4567
63	Filter Choke	32-7959
64	Filter Condenser (4-4 mfd.)	30-2315
65	Resistor (120 ohms)	33-112326
66	Reception Control	42-5850
67	Antenna Choke	32-1956
	Complete Control	42-5840
	Tuning Shaft	28-8871
	Tuning and Volume Knob	27-4725
	"Carline" Knob	27-4731
	"Music" Knob	27-4732
	"Speech" Knob	27-4733
	Dial	27-5399
	Fuse	7227
	Fuse Insulator	27-7729
	Distributor Resistor	33-1196
	Interference Condenser	30-4007
	"T" Bolt	28-6161
	Washer	W-2606
	Nut	W518

©John F. Rider, Publisher

I. F. TRANSFORMERS AND PADDERS

The I. F. transformers are assembled complete with padding condensers.

Both the primary and the secondary padders are placed side by side in the top of the transformer shield can. The adjusting screws are accessible thru the holes in the top of the shield. (See Figure 4).

The coil windings terminate in leads instead of terminals or lugs. The color scheme of the leads is given in Figure 3.

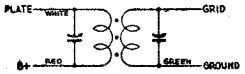

FIGURE 3

If replacements are ever necessary, replace the entire coil assembly, 32-3013, for the first I. F. stage and 32-3014 for the second I. F. stage. Neither the coil nor the padders will be furnished separately. Order only by the above numbers.

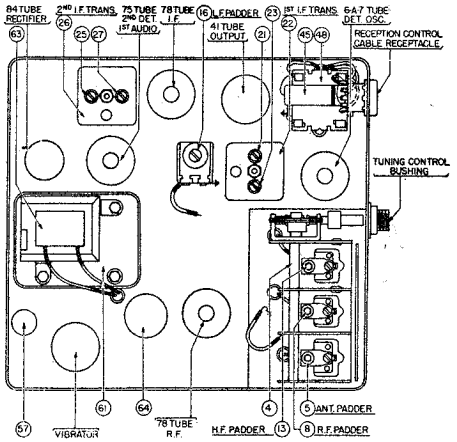

FIGURE 4

MODEL 926 ADJUSTMENTS

All padding adjustments are carefully made at the factory and ordinarily no readjustments are necessary. However, when readjustments are required, the procedure given below must be followed in detail.

Equipment — Fully charged heavy duty storage battery or 6-volt power pack, 048A or 099 Philco Set Tester, 3164 Padding wrench, 27-7159 Padding screw driver.

General — The output meter must be connected by means of an adapter to the plate of the type 41 output tube and to the Radio chassis.

With the Radio and signal generator set up for operation at the prescribed frequency, turn the Radio volume control on full and set the signal generator attenuator so that a half scale reading is obtained on the output meter. The signal in the speaker should be audible but not loud.

The shielding on the signal generator output lead must be connected to the Radio housing.

OPERATION	SIGNAL GENERATOR FREQUENCY	SIGNAL GENERATOR CONNECTION	DUMMY CAPACITY	SPECIAL INSTRUCTIONS	ADJUST PADDER
1	260 K. C.	To grid of 6A7 Tube	.1 Mfd. Condenser in Series with Generator Lead	No Antenna Connection	(29) (27) (21) (24)
2	1550 K. C.	To Antenna Receptacle on Radio	50 Mmfd. See Note 1	Turn Tuning Condenser Plates Out of Mesh as Far as They Will Go.	(13) (8) (5)
3	580 K. C.	To Antenna Receptacle on Radio	50 Mmfd. See Note 1	Set Tuning Condenser at 580 K. C.	(16) Note 2
4	1550 K. C.	To Antenna Receptacle on Radio	50 Mmfd. See Note 1	Turn Tuning Condenser Plates Out of Mesh as Far as They Will Go.	(13)
5	1400 K. C.	To Antenna Receptacle on Radio	50 Mmfd. See Note 1	Set Tuning Condenser at 1400 K. C.	(8) (5) Note 3
6	600 K. C.	Note 4	Note 4	Note 4	(1) Note 4

Make all adjustments for maximum reading on the output meter.

NOTE 1 — Connect the antenna lead, Part No. 41-3191, to the antenna receptacle in the radio. Connect a 50 Mmfd. Condenser in series between the signal generator and the antenna lead.

NOTE 2 — Rock the tuning condenser while adjusting the low frequency padder. Tune the condenser to the signal and adjust the padder for maximum output. Rotate the tuning condenser back and forth slightly for maximum output. Then re-adjust the padder for maximum output. Repeat this procedure until no further improvement is noticed.

NOTE 3 — When the antenna stage adjustment is made with the Radio installed in the car, the Radio antenna lead must be connected to the car antenna in the usual manner. Connect the signal generator output lead to a wire placed near the car antenna but not connected to it.

NOTE 4 — When installing the Radio in a car, follow the installation instructions carefully. Tune in a weak broadcast signal at approximately 60 on the control scale. With a small screw driver adjust the antenna compensating condenser (1) for the maximum signal.

STANDARD CONTROL MODELS 926 - 927 - 928K

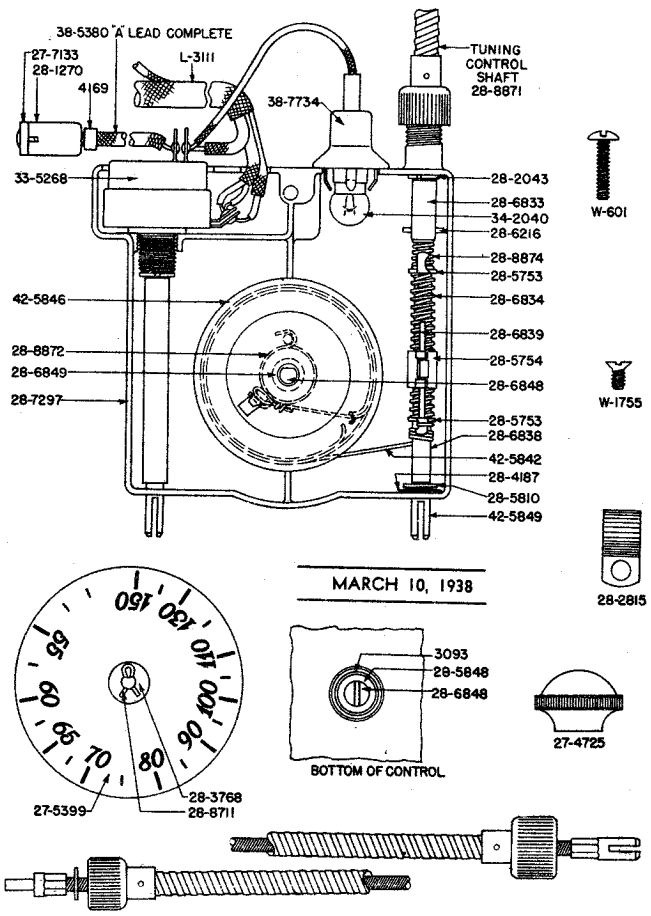

PARTS LIST

PART NUMBER	DESCRIPTION	PART NUMBER	DESCRIPTION	PART NUMBER	DESCRIPTION
L-3111	Cable	28-4500	Washer	28-7298	Top Cover
W-601	Screw	28-5753	Stop	28-8711	Spring
W-1755	Screw	28-5754	Gear Follower	28-8871	Flexible Shaft
3093	Washer	28-5810	Washer	28-8872	Anti Backlash Spring
4169	Washer	28-5848	Washer	28-8874	Spring
27-4265	Rubber Sleeve	28-6216	Pin	33-5268	Volume Control & Switch Assembly
27-4725	Knob	28-6833	Tuning Shaft End	34-2040	Pilot Lamp
27-5399	Dial	28-6834	Gear	38-5380	"A" Lead
27-7133	Ferrule	28-6838	Bushing	38-7734	Pilot Lamp Assembly
28-1270	Housing	28-6839	Pin	42-5840	Control Assembly
28-2043	Washer	28-6848	Dial Shaft	42-5842	Cord
28-2815	Clamp	28-6849	Dial Spacing Bushing	42-5846	Drum
28-4187	Washer	28-7297	Bottom Cover	42-5849	Tuning Shaft & Knob End Assembly

©John F. Rider, Publisher

PHILCO RADIO & TELEV. CORP.

MODEL 927
Schematic, Parts
Chassis Layout

MARCH 2, 1938

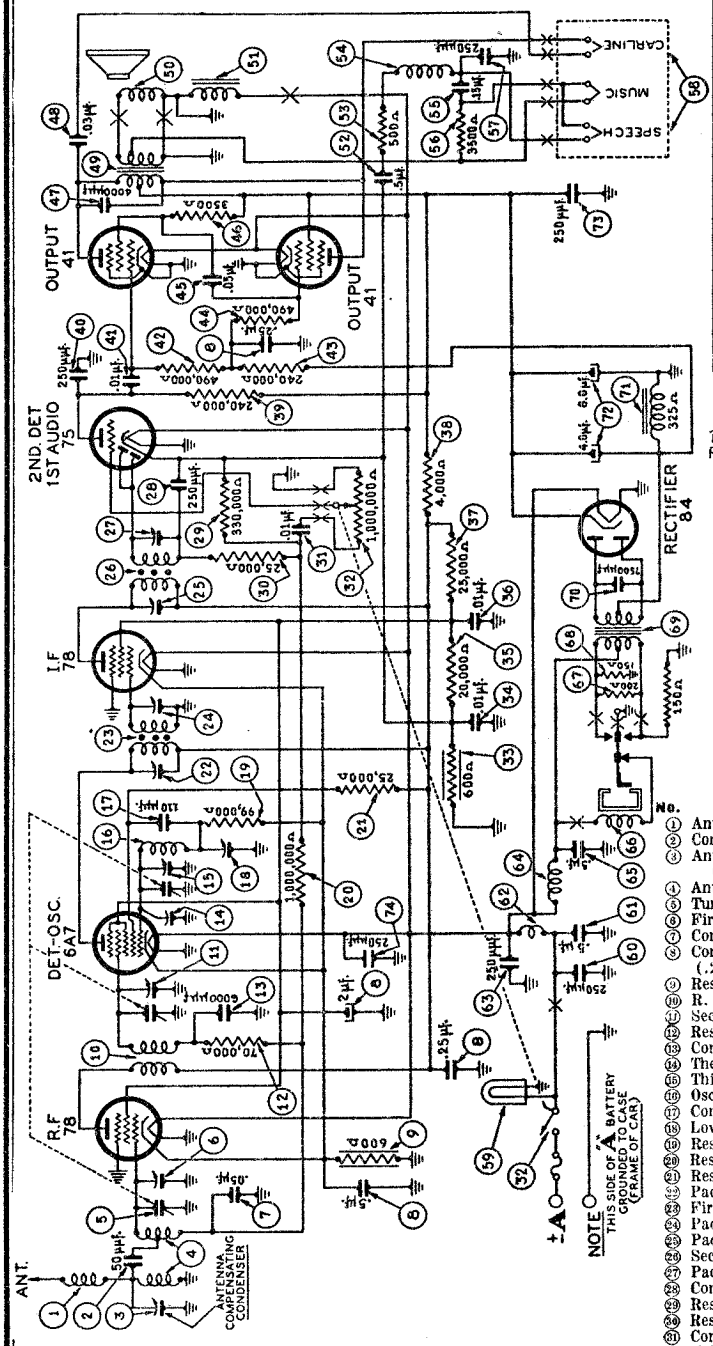

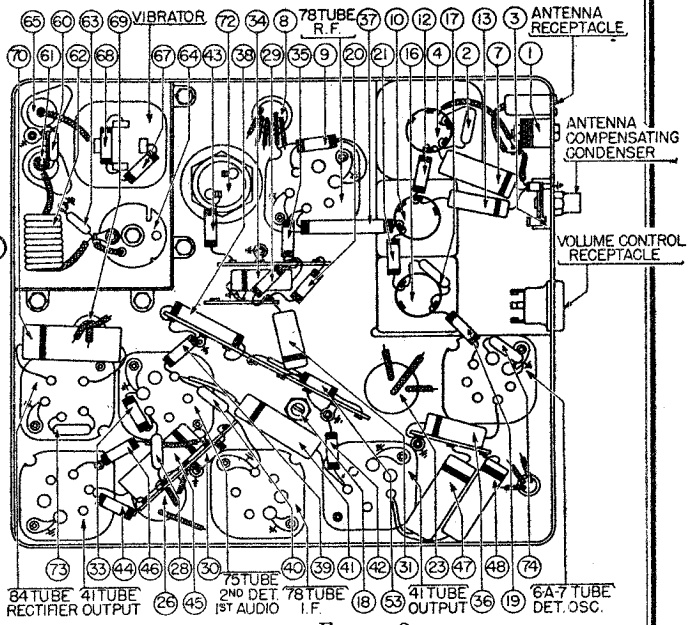

FIGURE 2

"Speech" Knob	27-4733	Interference Condenser	30-4007
Dial	27-5399	"T" Bolt	28-6161
Fuse	7227	Washer	28-2606
Fuse Insulator	27-7729	Nut	W-518
Distributor Resistor	33-1196		

FIGURE 1

I.F. = 260 K.C.

MODEL 927 PARTS LIST

No.	Description	Part No.
①	Antenna Choke	32-1956
②	Condenser (50 mmfd.)	30-1101
③	Antenna Compensating Condenser	31-6248
④	Antenna Transformer	32-2945
⑤	Tuning Condenser	31-2241
⑥	First Padder (on Tun. Cond.)	
⑦	Condenser (.05 mfd.)	30-4444
⑧	Condenser (.25, .25, .5, .5, 2 mfd.)	30-4568
⑨	Resistor (600 ohms)	33-160431
⑩	R. F. Transformer	32-2946
⑪	Second Padder (on Tun. Cond.)	
⑫	Resistor (70,000 ohms)	33-370344
⑬	Condenser (6,000 mmfd.)	30-4467
⑭	Thermol Comp. Condenser	31-6253
⑮	Third Padder (on Tun. Cond.)	
⑯	Oscillator Transformer	32-2947
⑰	Condenser (110 mmfd.)	30-1031
⑱	Low Frequency Padder	31-6230
⑲	Resistor (99,000 ohms)	33-399344
⑳	Resistor (1,000,000 ohms)	33-510344
㉑	Resistor (25,000 ohms)	33-325344
㉒	Padder (Pri. 1st I. F. Trans.)	
㉓	First I. F. Transformer	32-3013
㉔	Padder (Sec. 1st I. F. Trans.)	
㉕	Padder (Pri. 2nd I. F. Trans.)	
㉖	Second I. F. Transformer	32-3014
㉗	Padder (Sec. 2nd I. F. Trans.)	
㉘	Condenser (250 mmfd.)	30-1032
㉙	Resistor (330,000 ohms)	33-433344
㉚	Resistor (25,000 ohms)	33-325344
㉛	Condenser (.01 mfd.)	30-4479
㉜	Volume Control (1,000,000 ohms) & On-Off Switch	33-5268
㉝	Resistor (600 ohms)	33-160431
㉞	Condenser (.01 mfd.)	30-4479
㉟	Resistor (20,000 ohms)	33-320344
㊱	Condenser (.01 mfd.)	30-4479
㊲	Resistor (25,000 ohms)	33-325444
㊳	Resistor (4,000 ohms)	33-240444

No.	Description	Part No.
㊴	Resistor (240,000 ohms)	33-424344
㊵	Condenser (250 mmfd.)	30-1032
㊶	Condenser (.01 mfd.)	30-4145
㊷	Resistor (490,000 ohms)	33-449344
㊸	Resistor (240,000 ohms)	33-424344
㊹	Resistor (490,000 ohms)	33-449344
㊺	Condenser (.05 mfd.)	30-4454
㊻	Resistor (3,500 ohms)	33-235344
㊼	Condenser (4,000 mmfd.)	30-4185
㊽	Condenser (.03 mfd.)	30-4560
㊾	Output Transformer	32-7967
㊿	Cone & Voice Coil	45-2653
(51)	Field Coil	32-9493
(52)	Condenser (.5 mfd.)	Part of ⑥
(53)	Resistor (500 ohms)	33-150344
(54)	Choke	32-1372
(55)	Condenser (.15 mfd.)	30-4571
(56)	Resistor (3,500 ohms)	33-235344
(57)	Condenser (250 mmfd.)	30-1032
(58)	Reception Control	42-5850
(59)	Pilot Lamp	34-2040
(60)	Condenser (250 mmfd.)	30-1032
(61)	Condenser (.5 mfd.)	30-4474
(62)	"A" Choke	32-1374
(63)	Condenser (250 mmfd.)	30-1032
(64)	Vibrator Choke	32-2537
(65)	Condenser (.5 mfd.)	30-4474
(66)	Vibrator	41-3170-3
(67)	Resistor (200 ohms)	33-120344
(68)	Resistor (150 ohms)	33-115344
(69)	Power Transformer	32-7951
(70)	Condenser (7,500 mmfd.)	30-4567
(71)	Filter Choke	32-7822
(72)	Filter Condenser (4-8 mfd.)	30-2316
(73)	Condenser (250 mmfd.)	30-1032
(74)	Condenser (250 mmfd.)	30-1032
	Complete Control	42-5840
	Tuning Shaft	28-8871
	Tuning & Volume Knob	27-4725
	"Car-line" Knob	27-4731
	"Music" Knob	27-4732

PHILCO MODEL 927

©John F. Rider, Publisher

©John F. Rider, Publisher

I. F. TRANSFORMERS AND PADDERS

The I. F. transformers are assembled complete with padding condensers.

Both the primary and the secondary padders are placed side by side in the top of the transformer shield can. The adjusting screws are accessible thru the holes in the top of the shield. (See Figure 4).

The coil windings terminate in leads instead of terminals or lugs. The color scheme of the leads is given in Figure 3.

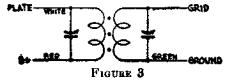

FIGURE 3

If replacements are ever necessary, replace the entire coil assembly, 32-3013 for the first I. F. stage and 32-3014 for the second I. F. stage. Neither the coil nor the padders will be furnished separately. Order only by the above numbers.

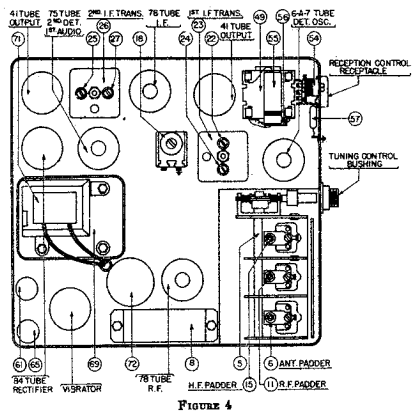

FIGURE 4

MODEL 927 ADJUSTMENTS

All padding adjustments are carefully made at the factory and ordinarily no readjustments are necessary. However, when readjustments are required, the procedure given below must be followed in detail.

Equipment — Fully charged heavy duty storage battery or 6-volt power pack, 048A or 099 Philco Set Tester, 3164 Padding wrench, 27-7159 Padding screw driver.

General — The output meter must be connected by means of an adapter to the plate of the type 41 output tube and to the Radio chassis.

With the Radio and signal generator set up for operation at the prescribed frequency, turn the Radio volume control on full and set the signal generator attenuator so that a half scale reading is obtained on the output meter. The signal in the speaker should be audible but not loud.

The shielding on the signal generator output lead must be connected to the Radio housing.

OPERATION	SIGNAL GENERATOR		DUMMY CAPACITY	SPECIAL INSTRUCTIONS	ADJUST PADDER
	FREQUENCY	CONNECTION			
1	260 K. C.	To grid of 6A7 Tube	.1 Mfd. Condenser in Series with Generator Lead	No Antenna Connection	㉕ ㉗ ㉙ ㉔
2	1550 K. C.	To Antenna Receptacle on Radio	50 Mmfd. See Note 1	Turn Tuning Condenser Plates Out of Mesh as Far as They Will Go.	⑮ ⑪ ⑥
3	580 K. C.	To Antenna Receptacle on Radio	50 Mmfd. See Note 1	Set Tuning Condenser at 580 K. C.	⑱ Note 2
4	1550 K. C.	To Antenna Receptacle on Radio	50 Mmfd. See Note 1	Turn Tuning Condenser Plates Out of Mesh as Far as They Will Go.	⑱
5	1400 K. C.	To Antenna Receptacle on Radio	50 Mmfd. See Note 1	Set Tuning Condenser at 1400 K. C.	⑪ ⑥ Note 3
6	600 K. C.	Note 4	Note 4	Note 4	③ Note 4

Make all adjustments for maximum reading on the output meter.

NOTE 1 — Connect the antenna lead, Part No. 41-3191, to the antenna receptacle in the radio. Connect a 50 Mmfd. Condenser in series between the signal generator and the antenna lead.

NOTE 2 — Rock the tuning condenser while adjusting the low frequency padder. Tune the condenser to the signal and adjust the padder for maximum output. Rotate the tuning condenser back and forth slightly for maximum output. Then re-adjust the padder for maximum output. Repeat this procedure until no further improvement is noticed.

NOTE 3 — When the antenna stage adjustment is made with the Radio installed in the car, the Radio antenna lead must be connected to the car antenna in the usual manner. Connect the signal generator output lead to a wire placed near the car antenna but not connected to it.

NOTE 4 — When installing the Radio in a car, follow the installation instructions carefully. Tune in a weak broadcast signal at approximately 60 on the control scale. With a small screw driver adjust the antenna compensating condenser ③ for the maximum signal.

I. F. TRANSFORMERS AND PADDERS

The I. F. transformers are assembled complete with padding condensers.

Both the primary and the secondary padders are placed side by side in the top of the transformer shield can. The adjusting screws are accessible thru the holes in the top of the shield. (See Figure 4).

The coil windings terminate in leads instead of terminals or lugs. The color scheme of the leads is given in Figure 3.

FIGURE 3

If replacements are ever necessary, replace the entire coil assembly, 32-3013, for the first I. F. stage and 32-3014 for the second I. F. stage. Neither the coil nor the padders will be furnished separately. Order only by the above numbers.

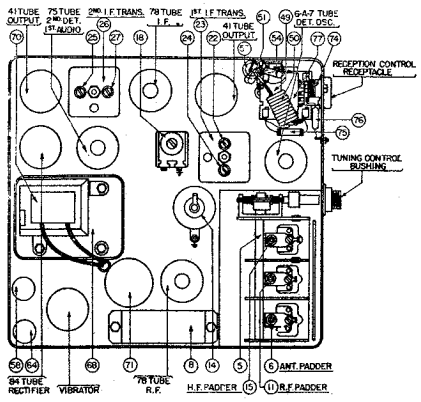

FIGURE 4

MODEL 928-K ADJUSTMENTS

All padding adjustments are carefully made at the factory and ordinarily no readjustments are necessary. However, when readjustments are required, the procedure given below must be followed in detail.

Equipment — Fully charged heavy duty storage battery or 6-volt power pack, 048A or 099 Philco Set Tester, 3164 Padding wrench, 27-7159 Padding screw driver.

General — The output meter must be connected by means of an adapter to the plate of the type 41 output tube and to the Radio chassis.

With the Radio and signal generator set up for operation at the prescribed frequency, turn the Radio volume control on full and set the signal generator attenuator so that a half scale reading is obtained on the output meter. The signal in the speaker should be audible but not loud.

The shielding on the signal generator output lead must be connected to the Radio housing.

OPERATION	SIGNAL GENERATOR		DUMMY CAPACITY	SPECIAL INSTRUCTIONS	ADJUST PADDER
	FREQUENCY	CONNECTION			
1	260 K. C.	To grid of 6A7 Tube	.1 Mfd. Condenser in Series with Generator Lead	No Antenna Connection	㉕ ㉗ ㉙ ㉔
2	1550 K. C.	To Antenna Receptacle on Radio	50 Mmfd. See Note 1	Turn Tuning Condenser Plates Out of Mesh as Far as They Will Go.	⑮ ⑪ ⑥
3	580 K. C.	To Antenna Receptacle on Radio	50 Mmfd. See Note 1	Set Tuning Condenser at 580 K. C.	⑱ Note 2
4	1550 K. C.	To Antenna Receptacle on Radio	50 Mmfd. See Note 1	Turn Tuning Condenser Plates Out of Mesh as Far as They Will Go.	⑱
5	1400 K. C.	To Antenna Receptacle on Radio	50 Mmfd. See Note 1	Set Tuning Condenser at 1400 K. C.	⑪ ⑥ Note 3
6	600 K. C.	Note 4	Note 4	Note 4	③ Note 4

Make all adjustments for maximum reading on the output meter.

NOTE 1 — Connect the antenna lead, Part No. 41-3191, to the antenna receptacle in the radio. Connect a 50 Mmfd. Condenser in series between the signal generator and the antenna lead.

NOTE 2 — Rock the tuning condenser while adjusting the low frequency padder. Tune the condenser to the signal and adjust the padder for maximum output. Rotate the tuning condenser back and forth slightly for maximum output. Then re-adjust the padder for maximum output. Repeat this procedure until no further improvement is noticed.

NOTE 3 — When the antenna stage adjustment is made with the Radio installed in the car, the Radio antenna lead must be connected to the car antenna in the usual manner. Connect the signal generator output lead to a wire placed near the car antenna but not connected to it.

NOTE 4 — When installing the Radio in a car, follow the installation instructions carefully. Tune in a weak broadcast signal at approximately 60 on the control scale. With a small screw driver adjust the antenna compensating condenser ③ for the maximum signal.

PHILCO RADIO & TELEV. CORP.

MODEL 928K
Schematic, Parts
Chassis Layout

MARCH 3, 1938

PHILCO MODEL 928-K

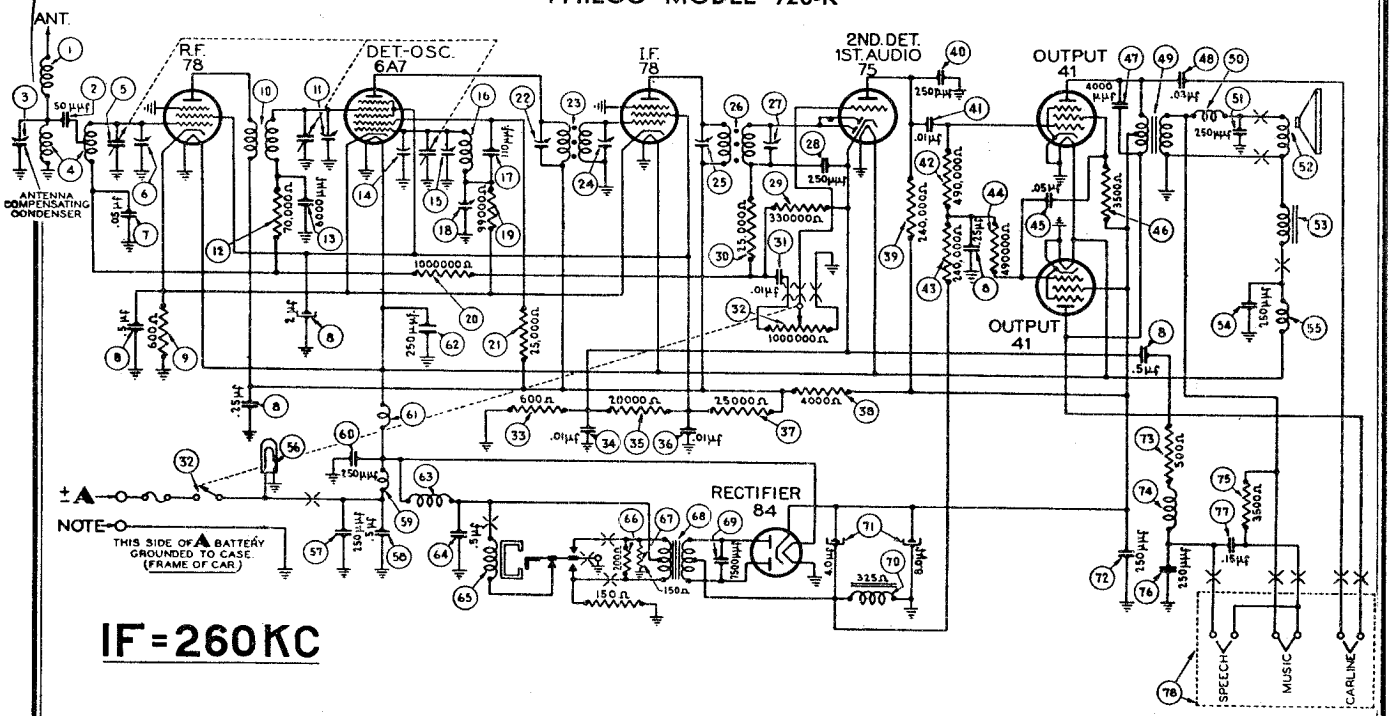

IF=260KC

MODEL 928-K PARTS LIST

No.	Description	Part No.
①	Antenna Choke	32-1956
②	Condenser (50 mmfd.)	30-1101
③	Antenna Compensating Condenser	31-6248
④	Antenna Transformer	32-2945
⑤	Tuning Condenser	31-2242
⑥	First Padder (on Tun. Cond.)	
⑦	Condenser (.05 mfd.)	30-4444
⑧	Condenser (.25-.25-.5-.5-2 mfd.)	30-4568
⑨	Resistor (600 ohms)	33-160331
⑩	R. F. Transformer	32-2946
⑪	Second Padder (on Tun. Cond.)	
⑫	Resistor (70,000 ohms)	33-370344
⑬	Condenser (6,000 mmfd.)	30-4467
⑭	Thermal Comp. Condenser	32-6232
⑮	Third Padder (on Tun. Cond.)	
⑯	Oscillator Transformer	32-2947
⑰	Condenser (110 mmfd.)	30-1031
⑱	Low Frequency Padder	31-6230
⑲	Resistor (99,000 ohms)	33-399344
⑳	Resistor (1,000,000 ohms)	33-510344
㉑	Resistor (25,000 ohms)	33-325344
㉒	Padder (Pri. 1st I. F. Trans.)	
㉓	First I. F. Transformer	32-3013
㉔	Padder (Sec. 1st I. F. Trans.)	
㉕	Padder (Pri. 2nd I. F. Trans.)	
㉖	Second I. F. Transformer	32-3014
㉗	Padder (Sec. 2nd I. F. Trans.)	
㉘	Condenser (250 mmfd.)	30-1032
㉙	Resistor (330,000 ohms)	33-433344
㉚	Resistor (25,000 ohms)	33-325344
㉛	Condenser (.01 mfd.)	30-4479
㉜	Volume Control (1,000,000 ohms & On-Off Switch)	33-5268
㉝	Resistor (600 ohms)	33-160331
㉞	Condenser (.01 mfd.)	30-4479
㉟	Resistor (20,000 ohms)	33-320344
㊱	Condenser (.01 mfd.)	30-4479
㊲	Resistor (25,000 ohms)	33-325444
㊳	Resistor (4,000 ohms)	33-240444
㊴	Resistor (240,000 ohms)	33-424344
㊵	Condenser (250 mmfd.)	30-1032
㊶	Condenser (.01 mfd.)	30-4145
㊷	Resistor (490,000 ohms)	33-449344
㊸	Resistor (240,000 ohms)	33-424344
㊹	Resistor (490,000 ohms)	33-449344
㊺	Condenser (.05 mfd.)	30-4454
㊻	Resistor (3,500 ohms)	33-235344
㊼	Condenser (4,000 mmfd.)	30-4185
㊽	Condenser (.03 mfd.)	30-4560
㊾	Output Transformer	32-7968
㊿	Choke	32-1374
(51)	Condenser (250 mmfd.)	30-1032
(52)	Cone & Voice Coil	45-2661
(53)	Field Coil	32-9493
(54)	Condenser (250 mmfd.)	30-1032
(55)	Choke	32-2535
(56)	Pilot Lamp	34-2040
(57)	Condenser (250 mmfd.)	30-1032
(58)	Condenser (.5 mfd.)	30-4474
(59)	"A" Choke	32-1374
(60)	Condenser (250 mmfd.)	30-1032
(61)	Choke	32-1374
(62)	Condenser (250 mmfd.)	30-1032
(63)	Vibrator Choke	32-2537
(64)	Condenser (.5 mfd.)	30-4474
(65)	Vibrator	41-3170-3
(66)	Resistor (200 ohms)	33-120344
(67)	Resistor (150 ohms)	33-115344
(68)	Power Transformer	32-7951
(69)	Condenser (7,500 mmfd.)	30-4567
(70)	Filter Choke	32-7959
(71)	Filter Condenser (4-8 mfd.)	30-2316
(72)	Condenser (250 mmfd.)	30-1032
(73)	Resistor (500 ohms)	33-150331
(74)	Choke	32-1372
(75)	Resistor (3,500 ohms)	33-235344
(76)	Condenser (250 mmfd.)	30-1032
(77)	Condenser (.15 mfd.)	30-4571
(78)	Reception Control	42-5850
	Complete Control	42-5810
	Tuning Shaft	28-8871
	Tuning & Volume Knob	27-4725
	"Car Line" Knob	27-4731
	"Music"	27-4732

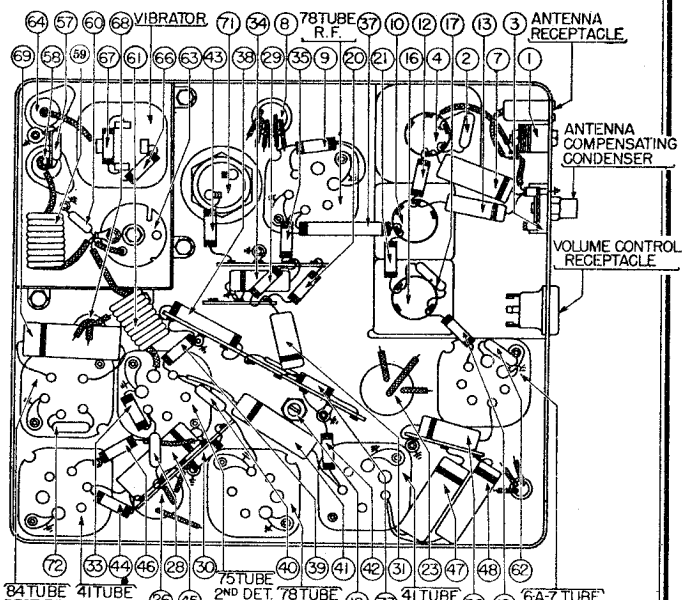

"Speech"	27-4733	Washer (Rec. Mtg.)	28-2606
Dial	27-5399	Nut (Rec. Mtg.)	W-518
Fuse	7227	Bolt (Speaker Mtg.)	6122
Fuse Insulator	27-7729	Nut (Speaker Mtg.)	W-55A
Distributor Resistor	33-1196		
Interference Condenser	30-4007		
"T" Bolt (Rec. Mtg.)	28-6161		

©John F. Rider, Publisher

MODEL N1514(Nash)
Schematic, Parts
Chassis Layout

PHILCO RADIO & TELEV. CORP.

NASH - PHILCO MODEL — N-1514 SINGLE UNIT RECEIVER

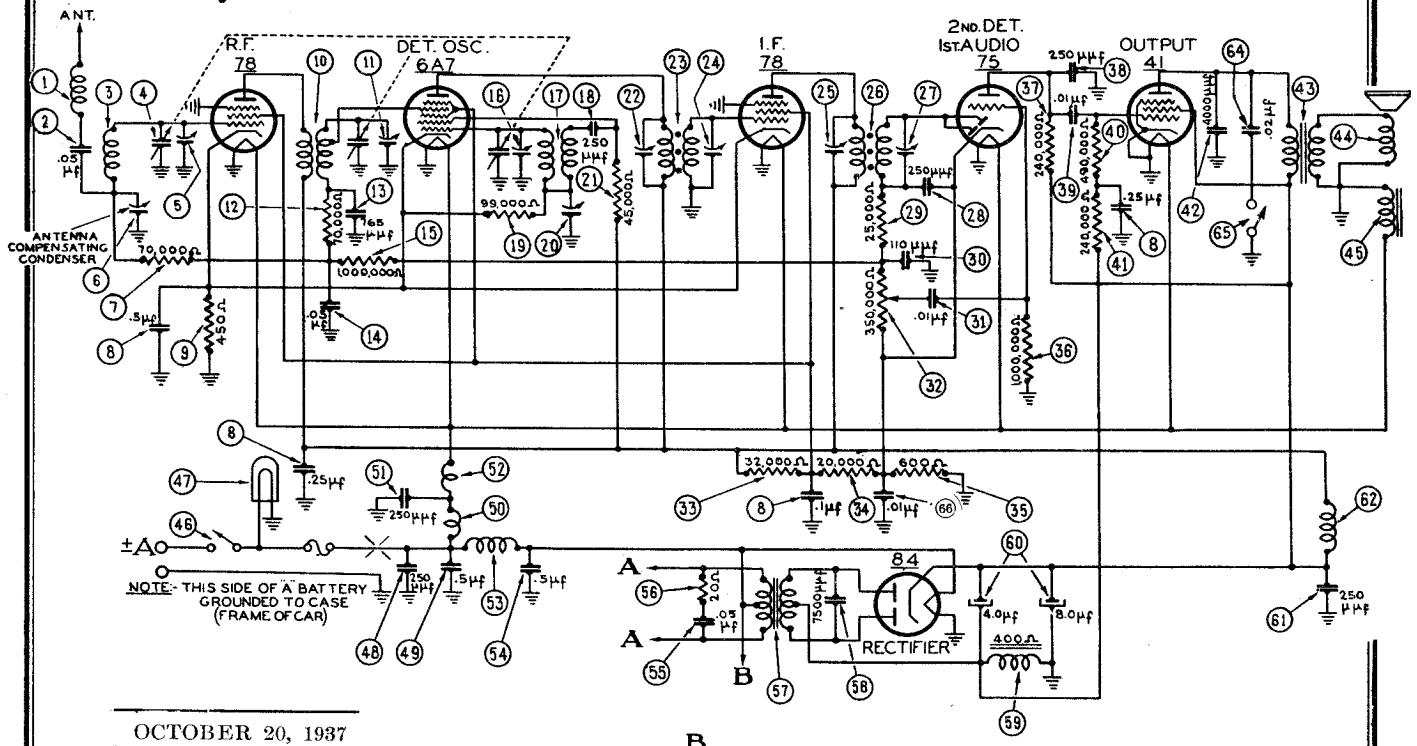

OCTOBER 20, 1937

FOR ALIGNMENT, SEE INDEX

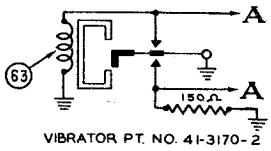

VIBRATOR PT. NO. 41-3170-2

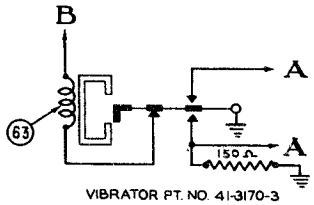

VIBRATOR PT. NO. 41-3170-3

I.F.=260KC

FIGURE 1

MODEL N-1514 PARTS LIST

No.	Description	Part No.
①	Antenna Choke	32-1956
②	Condenser (.05 mfd.)	30-4444
③	Antenna Transformer	32-2516
④	Tuning Condenser	31-1930
⑤	First Padder (on Tun. Cond.)	
⑥	Antenna Compensator	31-6082
⑦	Resistor (70,000 ohms)	33-370344
⑧	Condenser (.01-.1-.25-.25-.5 mfd.)	30-4511
⑨	Resistor (450 ohms)	33-1218
⑩	R. F. Transformer	32-2307
⑪	Second Padder (on Tun. Cond.)	
⑫	Resistor (70,000 ohms)	33-370344
⑬	Condenser (765 mmfd.)	30-1069
⑭	Condenser (.05 mfd.)	3615-0SG
⑮	Resistor (1,000,000 ohms)	33-510344
⑯	Third Padder (on Tun. Cond.)	
⑰	Oscillator Transformer	32-2308
⑱	Condenser (250 mmfd.)	30-1032
⑲	Resistor (99,000 ohms)	33-399344
⑳	Low Frequency Padder	31-6102
㉑	Resistor (45,000 ohms)	33-345344
㉒	Padder (Pri. 1st I. F. Trans.)	
㉓	First I. F. Transformer	32-2026
㉔	Padder (Sec. 1st I. F. Trans.)	
㉕	Padder (Pri. 2nd I. F. Trans.)	
㉖	Second I. F. Transformer	32-2027
㉗	Padder (Sec. 2nd I. F. Trans.)	
㉘	Condenser (250 mmfd.)	30-1032
㉙	Resistor (25,000 ohms)	33-325344
㉚	Condenser (110 mmfd.)	30-1031
㉛	Condenser (.01 mfd.)	3903-0SU
㉜	Volume Control (350,000 ohms)	33-5139
㉝	Resistor (32,000 ohms)	33-332434
㉞	Resistor (20,000 ohms)	33-320344
㉟	Resistor (600 ohms)	33-1212
㊱	Resistor (1,000,000 ohms)	33-510344
㊲	Resistor (240,000 ohms)	33-424344
㊳	Condenser (250 mmfd.)	30-1032
㊴	Condenser (.01 mfd.)	3903-0SU
㊵	Resistor (490,000 ohms)	33-449344
㊶	Resistor (240,000 ohms)	33-424344
㊷	Condenser (4,000 mmfd.)	30-4185
㊸	Output Transformer	32-7495
㊹	Cone & Voice Coil	36-3586
㊺	Field Coil	32-9236
㊻	On & Off Switch	42-5617
㊼	Pilot Lamp	34-2040
㊽	Condenser (250 mmfd.)	30-1032
㊾	Condenser (.5 mfd.)	30-4015
㊿	"A" Choke	32-1604
(51)	Condenser (250 mmfd.)	30-1032
(52)	Filament Choke	32-2039
(53)	Vibrator Choke	32-2535
(54)	Condenser (.5 mfd.)	30-4015
(55)	Condenser (.05 mfd.)	30-4444
(56)	Resistor (20 ohms)	33-020344
(57)	Power Transformer	32-7550
(58)	Condenser (7,500 mmfd.)	30-4420
(59)	Filter Choke	32-7545
(60)	Filter Condenser (4-8 mfd.)	30-2150
(61)	Condenser (250 mmfd.)	30-1032
(62)	"B" Choke	32-1281
(63)	Vibrator (OPTIONAL)	41-3170-2
		41-3170-3
(64)	Condenser (.02 mfd.)	30-4419
(65)	Tone Control Switch	42-1145-2
(66)	Condenser (.01 mfd.)	3903-0SG
	Receiver Housing	38-9230
	Four Prong Socket	27-6044
	Five Prong Socket	27-6035
	Six Prong Socket	27-6036
	Seven Prong Socket	27-6037
	Tuning Control Shaft	28-8815
	Volume Control Shaft	28-8816
	Tone Control Shaft	28-8817
	Tuning & Volume Knob	27-4690
	Knob	27-4639
	Knob Base	28-4184
	Gland Nut	28-6558
	Scale Assembly	42-5792
	Fuse	7227
	Fuse Insulator	27-7729
	Tee Bolt (Rec. Mtg.)	
	Side	28-6161
	Bottom	28-6268
	Nut (Rec. Mtg.)	W518
	Distributor Resistor	33-1196
	Interference Condenser	30-4007
	Interference Condenser	30-4307
	Interference Condenser	30-4663

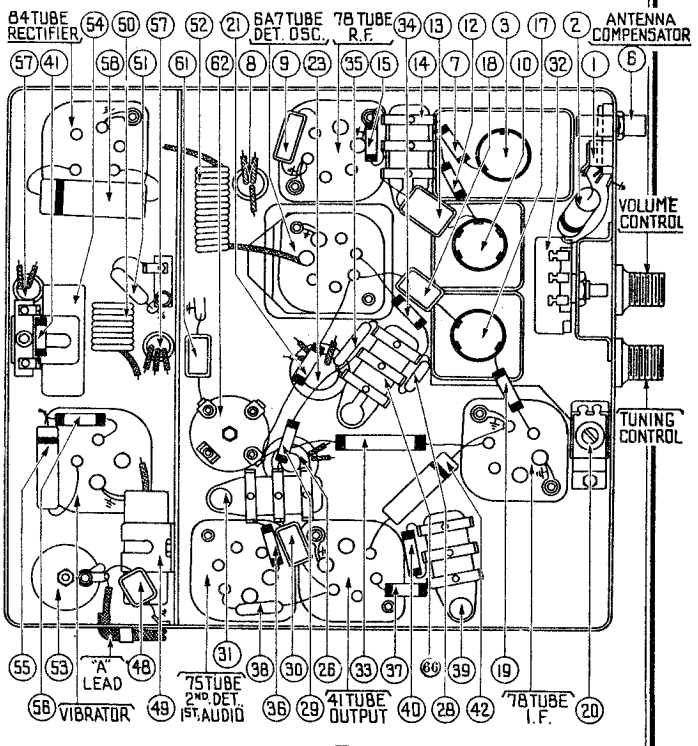

FIGURE 2

©John F. Rider, Publisher

PHILCO RADIO & TELEV. CORP.

MODEL S1516(Studebaker)
Schematic,Parts
Chassis Layout

STUDEBAKER - PHILCO MODEL — S-1516 SINGLE UNIT RECEIVER

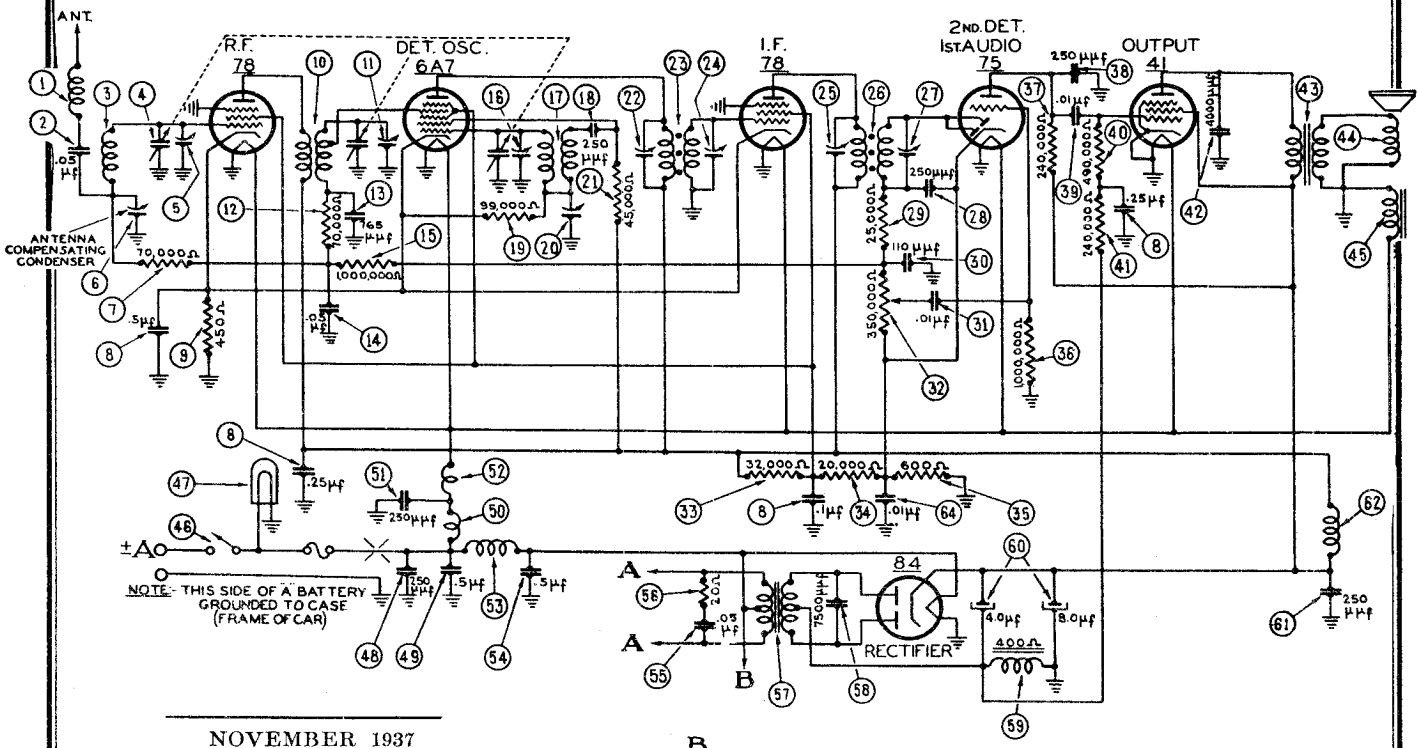

NOVEMBER 1937

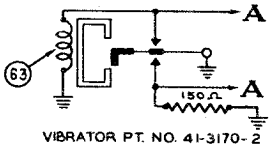

VIBRATOR PT. NO. 41-3170-2

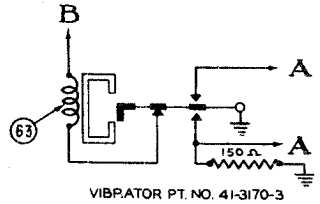

VIBRATOR PT. NO. 41-3170-3

I.F.=260KC

FIGURE 1

MODEL S-1516 PARTS LIST

No.	Description	Part No.
①	Antenna Choke	32-2344
②	Condenser (.05 mfd.)	30-4444
③	Antenna Transformer	32-2516
④	Tuning Condenser	31-1930
⑤	First Padder (on Tun. Cond.)	
⑥	Antenna Compensator	31-6082
⑦	Resistor (70,000 ohms)	33-370344
⑧	Condenser (.01-.1-.25-.25-.5 mfd.)	30-4511
⑨	Resistor (450 ohms)	33-1218
⑩	R. F. Transformer	32-2307
⑪	Second Padder (on Tun. Cond.)	
⑫	Resistor (70,000 ohms)	33-370344
⑬	Condenser (765 mmfd.)	30-1069
⑭	Condenser (.05 mfd.)	3615-0SG
⑮	Resistor (1,000,000 ohms)	33-510344
⑯	Third Padder (on Tun. Cond.)	
⑰	Oscillator Transformer	32-2308
⑱	Condenser (250 mmfd.)	30-1032
⑲	Resistor (99,000 ohms)	33-399344
⑳	Low Frequency Padder	31-6102
㉑	Resistor (45,000 ohms)	33-345344
㉒	Padder (Pri. 1st I. F. Trans.)	
㉓	First I. F. Transformer	32-2026
㉔	Padder (Sec. 1st I. F. Trans.)	
㉕	Padder (Pri. 2nd I. F. Trans.)	
㉖	Second I. F. Transformer	32-2027
㉗	Padder (Sec. 2nd I. F. Trans.)	
㉘	Condenser (250 mmfd.)	30-1032
㉙	Resistor (25,000 ohms)	33-325344
㉚	Condenser (110 mmfd.)	30-1031
㉛	Condenser (.01 mfd.)	3903-0SU
㉜	Volume Control (350,000 ohms)	33-5139
㉝	Resistor (32,000 ohms)	33-332434
㉞	Resistor (20,000 ohms)	33-320344
㉟	Resistor (600 ohms)	33-1212
㊱	Resistor (1,000,000 ohms)	33-510344
㊲	Resistor (240,000 ohms)	33-424344
㊳	Condenser (250 mmfd.)	30-1032
㊴	Condenser (.01 mfd.)	3903-0SU
㊵	Resistor (490,000 ohms)	33-449344
㊶	Resistor (240,000 ohms)	33-424344
㊷	Condenser (4,000 mmfd.)	30-4185
㊸	Output Transformer	32-7495
㊹	Cone & Voice Coil	36-3586
㊺	Field Coil	32-9236
㊻	On & Off Switch	42-1368
㊼	Pilot Lamp	34-2040
㊽	Condenser (250 mmfd.)	30-1032
㊾	Condenser (.5 mfd.)	30-4015
㊿	"A" Choke	32-1604
(51)	Condenser (250 mmfd.)	30-1032
(52)	Filament Choke	32-2039
(53)	Vibrator Choke	32-2535
(54)	Condenser (.5 mfd.)	30-4015
(55)	Condenser (.05 mfd.)	30-4444
(56)	Resistor (20 ohms)	33-020344
(57)	Power Transformer	32-7550
(58)	Condenser (7,500 mmfd.)	30-4420
(59)	Filter Choke	32-7545
(60)	Filter Condenser (4-8 mfd.)	30-2150
(61)	Condenser (250 mmfd.)	30-1032
(62)	"B" Choke	32-1281
(63)	Vibrator (OPTIONAL)	41-3170-2 41-3170-3
(64)	Condenser (.01 mfd.)	3903-0SG
	Receiver Housing	38-2103
	Four Prong Socket	27-6044
	Five Prong Socket	27-6035
	Six Prong Socket	27-6036
	Seven Prong Socket	27-6037
	Tuning Control Shaft	28-8852
	Volume Control Shaft	28-8853
	Tuning & Volume Knob	27-4689
	Scale Assembly	42-5781
	Fuse	7227
	Fuse Insulator	27-7729
	Inductive Suppressor	32-2250
	Interference Condenser	30-4307
	Distributor Condenser	30-1087

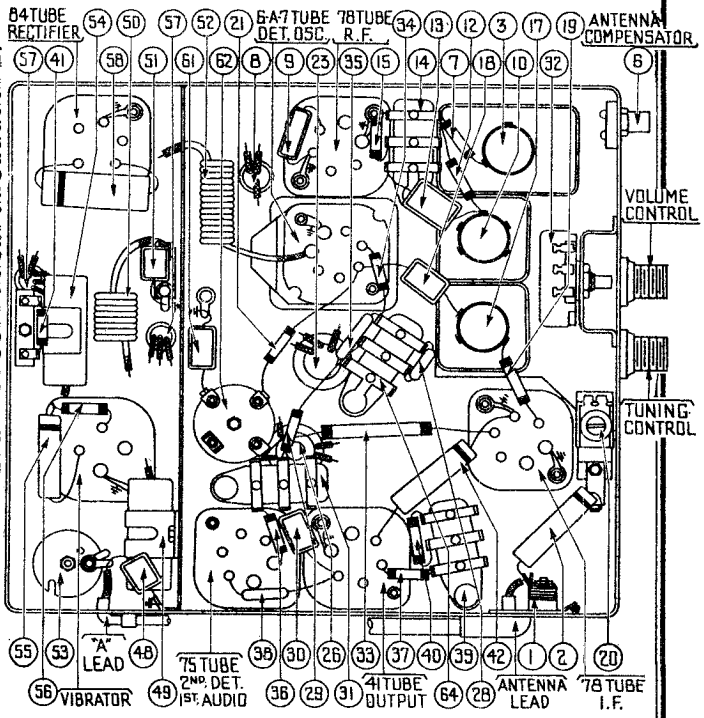

FIGURE 2

©John F. Rider, Publisher

PHILCO RADIO & TELEV. CORP.

MODEL S1516(Studebaker)
Socket,Trimmers,Controls
Alignment,Parts

I. F. TRANSFORMERS AND PADDERS

The I. F. transformers are assembled complete with padding condensers.

Both the primary and the secondary padders are placed side by side in the top of the transformer shield can. The adjusting screws are accessible thru the holes in the top of the shield. (See Figure 8).

The coil windings terminate in leads instead of terminals or lugs. The color scheme of the leads is given in Figure 7.

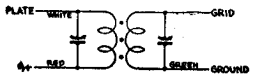

FIGURE 7

If replacements are ever necessary, replace the entire coil assembly, 32-2026 for the first I. F. stage and 32-2027 for the second I. F. stage. Neither the coil nor the padders will be furnished separately. Order only by the above numbers.

MODEL S-1516 ADJUSTMENTS

All padding adjustments are carefully made at the factory and ordinarily no readjustments are necessary. However, when readjustments are required, the procedure given below must be followed in detail.

Equipment

Fully charged heavy duty storage battery or 6-volt power pack, 048A or 099 Philco Set Tester, 3164 Padding wrench, 27-7159 Padding screw driver.

General

OUTPUT METER — The output meter must be connected by means of an adapter to the plate of the type 41 output tube and to the Receiver chassis.

SIGNAL GENERATOR — With the Receiver and signal generator set up for operation at the prescribed frequency, turn the Receiver volume control on full and set the signal generator attenuator so that a half scale reading is obtained on the output meter. The signal in the speaker should be audible but not loud.

The shielding on the signal generator output lead must be connected to the Receiver housing.

Procedure

I. F. — Set the signal generator at exactly 260 K. C.

Connect the generator lead to the grid cap of the 6A7 tube in series with a .1 mfd. condenser (without removing the grid clip). Adjust the padders (22), (24), (25) and (27) on the first and second I. F. transformer for maximum reading on the output meter. (See Figure 8 for location of padders).

HIGH FREQUENCY AND R. F. — After padding the I .F. stages remove the generator lead from the 6A7 tube.

Set the signal generator at 1550 K. C. and then connect the generator lead to the grid cap of the 78 R. F. tube in series with a .1 mfd. condenser (without removing the grid clip).

Turn the tuning condenser plates out of mesh as far as they will go.

With the tuning condenser in this position, adjust the high frequency padder (16) and the R. F. padder (11) until the maximum reading is obtained on the output meter. This is the true setting for 1550 K. C., 155 on the dial scale.

LOW FREQUENCY — Turn the tuning condenser plates in mesh to approximately 580 K. C., 58 on the dial scale and set the signal generator at 580 K. C. Roll the tuning condenser and adjust the low frequency padder screw (20), for maximum reading on the output meter.

HIGH FREQUENCY READJUSTMENT — Turn the tuning condenser plates out of mesh to 1550 K. C. and set the signal generator at 1550 K. C. Then adjust the high frequency padder (16) again for maximum reading on the output meter.

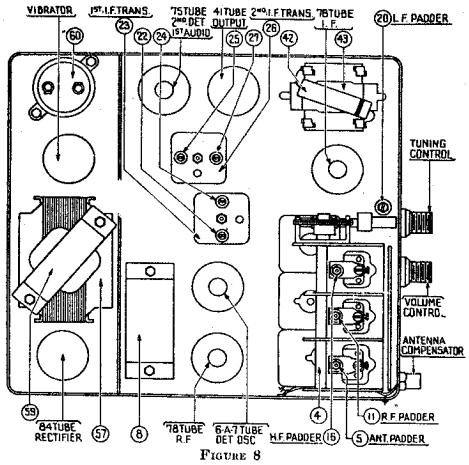

FIGURE 8

Remove the generator lead from the 78 R. F. tube.

ANTENNA — WHEN PADDING THE ANTENNA STAGE IT IS EXTREMELY IMPORTANT THAT THE PROPER DUMMY ANTENNA BE CONSTRUCTED AND USED.

Connect the signal generator lead to the antenna connector on the Receiver using an antenna lead, Part No. L-2665, and a 25 mmfd. condenser in series between the two leads.

Turn the tuning condenser in mesh to 600 K. C. and adjust the signal generator 600 K. C. Adjust the antenna compensating condenser (5) for maximum reading.

Turn the tuning condenser to 1400 K. C. and set the generator at 1400 K. C. Adjust the padders (11) and (5) for the maximum reading on the output meter.

When the antenna stage adjustment is made with the Receiver installed in the car, the Receiver antenna lead must be connected to the car antenna in the usual manner. Connect the signal generator output lead to a wire placed near the car antenna but not connected to it.

When installing the Radio in a car, follow the installation instructions carefully. Tune in a weak broadcast signal at approximately 60 on the control scale. With a small screw driver adjust the antenna compensating condenser (5) for the maximum signal.

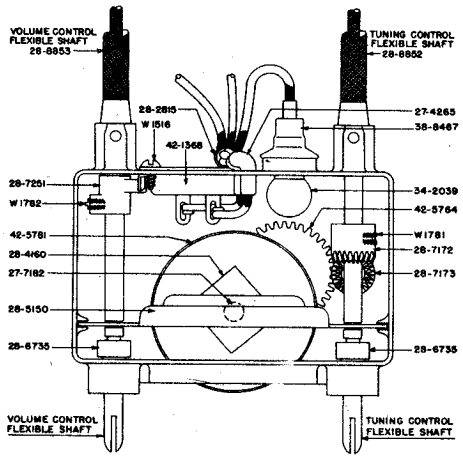

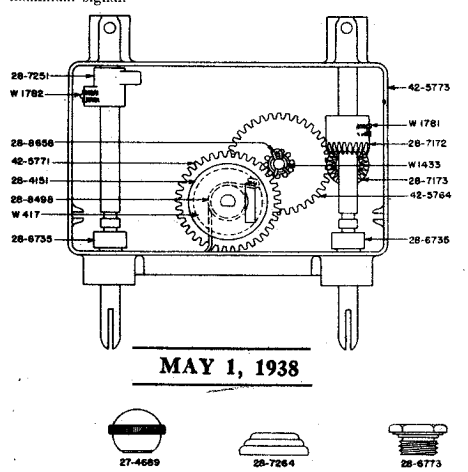

MAY 1, 1938

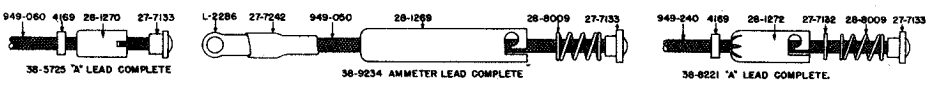

STUDEBAKER MODEL S-1516 CONTROL UNIT

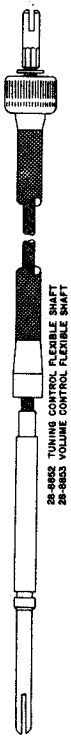

PARTS LIST AND PRICES

(Prices Subject to Change Without Notice)

PART NUMBER	DESCRIPTION	LIST PRICE
L-2286	Lug	.02
W-417	Washer	per 100 .50
W-1433	Washer	per 100 .15
W-1516	Screw	per 100 1.80
W-1781	Set Screw	per 100 3.00
W-1782	Set Screw	per 100 2.50
4169	Washer	per 100 1.20
27-4265	Sleeve	per 100 1.25
27-4689	Tuning and Volume Knob	.15
27-7133	Washer	per 100 .40
27-7133	Ferrule	per 100 .01
27-7182	Felt Washer	per 100 .30
27-7242	Sleeve	per 100 .40
28-1269	Flex Housing	.01
28-1270	Housing	.01
28-1272	Housing	per 100 .85
28-2815	Clamp	.01
28-4151	Washer	.02
28-4160	Spring	.01
28-5150	Shaft Retainer Plate	.05
28-6735	Bushing	*
28-6773	Gland Nut	*
28-7173	Miter Drive Gear	.10
28-7123	Miter Gear	.10
28-7351	Switch Lever	.15
28-7264	Knob-base	.20
28-8009	Spring	per 100 .50
28-8498	Anti-back Lash Spring	.10
28-8658	Spring	.03
28-8852	Tuning Shaft	.90
28-8853	Volume Shaft	.90
28-1269	Pilot Lamp	.09
34-2039	"A" Lead	*
38-5725	"A" Lead	.20
38-8221	Pilot Lamp Assembly	.30
38-8467	Ammeter Lead	*
38-9234	On-Off Switch	.35
42-1368	Intermediate Gear Assembly	.20
42-5764	Drum Shaft and Gear Assembly	.15
42-5771	Housing and Stud Assembly	.85
42-5773	Dial Assembly	.35
42-5781		

* Prices not available at this time.

©John F. Rider, Publisher

PHILCO RADIO & TELEV. CORP.

MODEL P1517(Packard)
Schematic, Parts
Chassis Layout

PACKARD - PHILCO MODEL P-1517 SINGLE UNIT RECEIVER

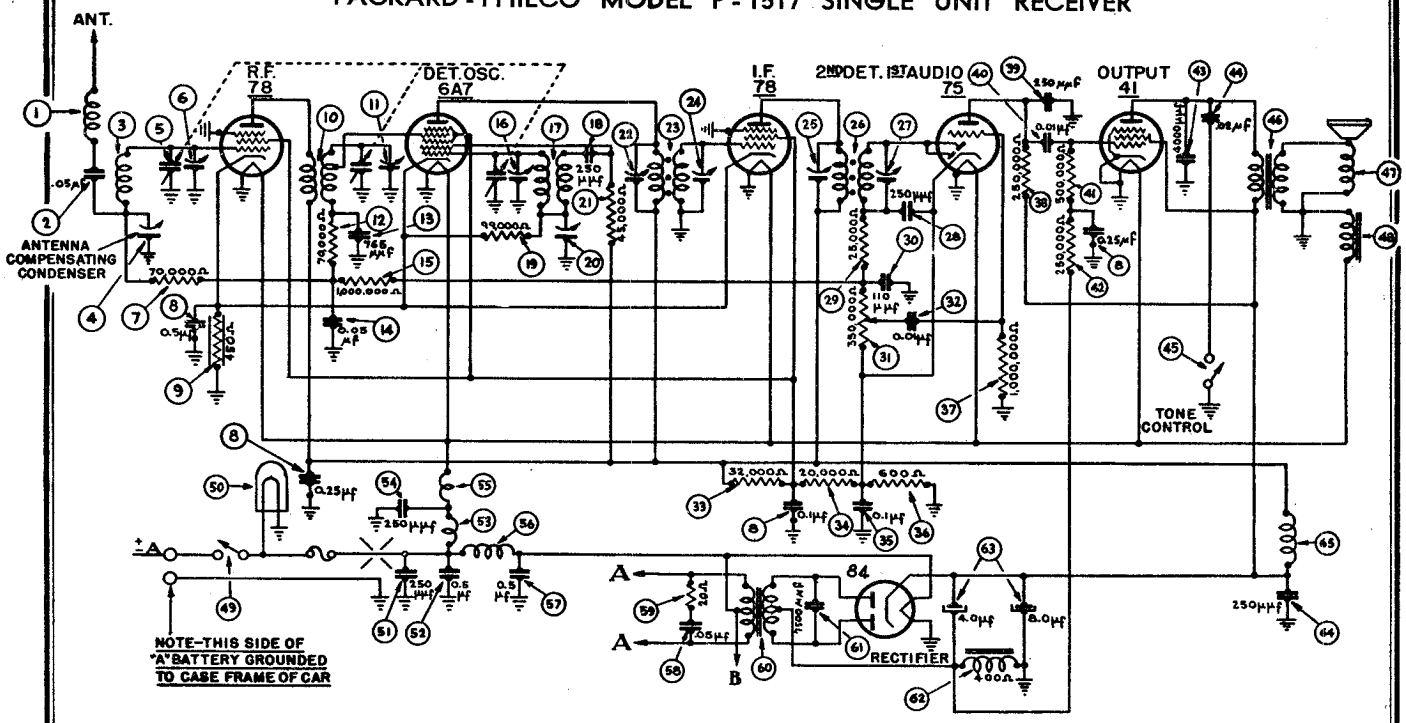

FIGURE 1

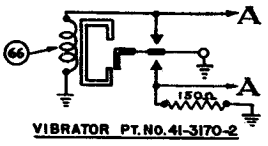

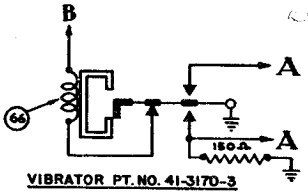

I.F. = 260 KC

OCTOBER 15, 1937

PARTS LIST — MODEL P-1517

No.	Description	Part No.
①	Antenna Choke	32-2344
②	Condenser (.05 mfd.)	30-4444
③	Antenna Transformer	32-2516
④	Antenna Compensating Condenser	31-6082
⑤	Tuning Condenser	31-1930
⑥	First Padder (on Tun. Cond.)	
⑦	Resistor (70,000 ohms)	33-370344
⑧	Condenser (.1-.25-.25-.5 mfd.)	30-4415
⑨	Resistor (450 ohms)	33-1218
⑩	R. F. Transformer	32-2307
⑪	Second Padder (on Tun. Cond.)	
⑫	Resistor (70,000 ohms)	33-370344
⑬	Condenser (765 mmfd.)	30-1069
⑭	Condenser (.05 mfd.)	3615-0SG
⑮	Resistor (1,000,000 ohms)	33-510344
⑯	Third Padder (on Tun. Cond.)	
⑰	Oscillator Transformer	32-2308
⑱	Condenser (250 mmfd.)	30-1032
⑲	Resistor (99,000 ohms)	33-399344
⑳	Low Frequency Padder	31-6102
㉑	Resistor (45,000 ohms)	33-345344
㉒	Padder (Pri. 1st. I. F. Trans.)	
㉓	First I. F. Transformer	32-2026
㉔	Padder (Sec. 1st I. F. Trans.)	
㉕	Padder (Pri. 2nd I. F. Trans.)	
㉖	Second I. F. Transformer	32-2027
㉗	Padder (Sec. 2nd I. F. Trans.)	
㉘	Condenser (250 mmfd.)	30-1032
㉙	Resistor (25,000 ohms)	33-325344
㉚	Condenser (110 mmfd.)	30-1031
㉛	Volume Control (350,000 ohms)	33-5139
㉜	Condenser (.01 mfd.)	3903-0SU
㉝	Resistor (32,000 ohms)	33-332434
㉞	Resistor (20,000 ohms)	33-320344
㉟	Condenser (.01 mfd.)	3903-0SG
㊱	Resistor (600 ohms)	33-1212
㊲	Resistor (1,000,000 ohms)	33-510344
㊳	Resistor (250,000 ohms)	33-424344
㊴	Condenser (250 mmfd.)	30-1032
㊵	Condenser (.01 mfd.)	3903-0SU
㊶	Resistor (500,000 ohms)	33-449344
㊷	Resistor (250,000 ohms)	33-424344
㊸	Condenser (4,000 mmfd.)	30-4185
㊹	Condenser (.02 mfd.)	30-4419
㊺	Tone Control Switch	42-1383
㊻	Output Transformer	32-7495
㊼	Cone & Voice Coil	36-3586
㊽	Field Coil Assembly	36-3597
㊾	On & Off Switch	42-1368
㊿	Pilot Lamp	34-2039
(51)	Condenser (250 mmfd.)	30-1032
(52)	Condenser (.5 mfd.)	30-4015
(53)	"A" Choke	32-2535
(54)	Condenser (250 mmfd.)	30-1032
(55)	Filament Choke	32-1604
(56)	Vibrator Choke	32-2039
(57)	Condenser (.5 mfd.)	30-4015
(58)	Condenser (.05 mfd.)	30-4444
(59)	Resistor (20 ohms)	33-020344
(60)	Power Transformer	32-7550
(61)	Condenser (7,500 mmfd.)	30-4420
(62)	"B" Filter Choke	32-7545
(63)	Filter Condenser (4-8 mfd.)	30-2150
(64)	Condenser (250 mmfd.)	30-1032
(65)	"B" Choke	32-1281
(66)	Vibrator (OPTIONAL)	41-3170-2
		41-3170-3
	Receiver Housing	38-9150
	Pilot Lamp Assembly	38-8467
	Tuning Shaft	28-8783
	Volume Shaft	28-8784
	Scale Assembly	42-5776
	Gland Nut	28-6773
	Four Prong Socket	27-6044
	Five Prong Socket	27-6035
	Six Prong Socket	27-6036
	Seven Prong Socket	27-6037
	Interference Condenser (Dome Light)	30-4007
	Interference Condenser (Generator)	30-4475
	Distributor Resistor	4851
	Fuse	7227
	Fuse Insulator	27-7729
	Tee Bolt (Rec. Mtg.)	28-6268
	Nut (Rec. Mtg.)	W-518A

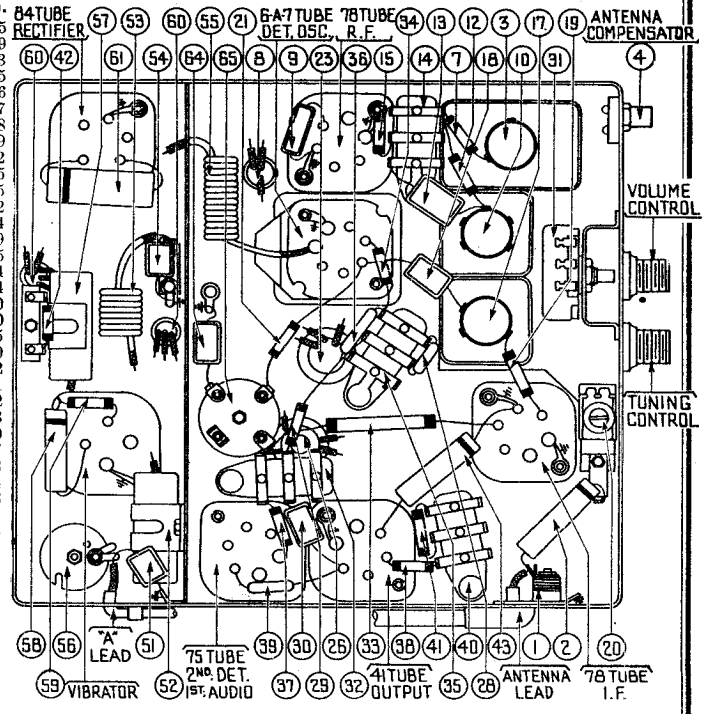

FIGURE 2

©John F. Rider, Publisher

©John F. Rider, Publisher

I. F. TRANSFORMERS AND PADDERS

The I. F. transformers are assembled complete with padding condensers.

Both the primary and the secondary padders are placed side by side in the top of the transformer shield can. The adjusting screws are accessible thru the holes in the top of the shield.

The coil windings terminate in leads instead of terminals or lugs. The color scheme of the leads is given in Figure

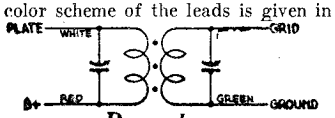

MODEL P-1517 *Procedure*

I. F. — Set the signal generator at exactly 260 K. C.

Connect the generator lead to the grid cap of the 6A7 tube in series with a .1 mfd. condenser (without removing the grid cap). Adjust the padders ㉒, ㉔, ㉕ and ㉗ on the first and second I. F. transformers, for maximum reading on the output meter. (See Figure 8 for location of padders).

HIGH FREQUENCY AND R. F. — After padding the I. F. stages, remove the generator lead from the 6A7 tube.

Set the signal generator at 1550 K. C. and then connect the generator lead to the grid cap of the 78 R. F. tube in series with a .1 mfd. condenser (without removing the grid cap).

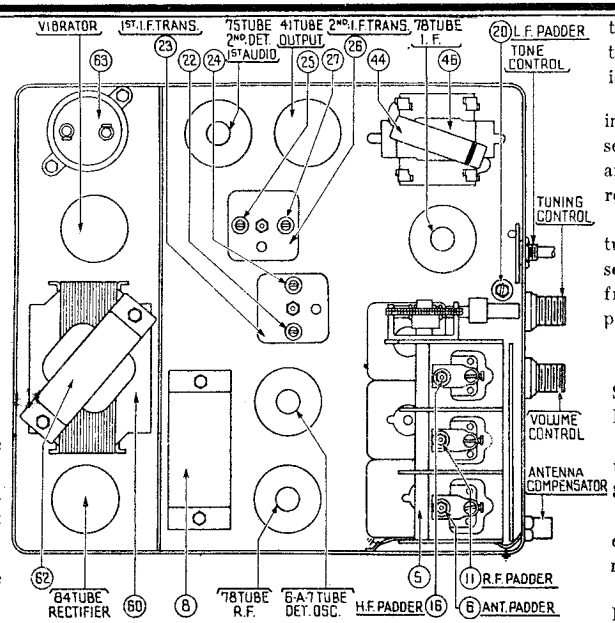

FIGURE 8

Turn the tuning condenser plates out of mesh as far as they will go. With the tuning condenser in this position, adjust the high frequency padder ⑯ and the R. F. padder ⑪ until the maximum reading is obtained on the output meter. This is the true setting for 1550 K. C., 155 on the dial scale.

LOW FREQUENCY — Turn the tuning condenser plates in mesh to approximately 580 K. C., 58 on the dial scale and set the signal generator at 580 K. C. Roll the tuning condenser and adjust the low frequency padder screw ⑳ for maximum reading on the output meter.

HIGH FREQUENCY READJUSTMENT — Turn the tuning condenser plates out of mesh as far as they will go and set the signal generator at 1550 K. C. Then adjust the high frequency padder ⑯ again for maximum reading on the output meter.

Remove the generator lead from the 78 R. F. tube.

ANTENNA — WHEN PADDING THE ANTENNA STAGE IT IS EXTREMELY IMPORTANT THAT THE PROPER DUMMY ANTENNA BE USED.

Connect the signal generator lead to the antenna socket on the Receiver using an antenna lead, Part No. L-2665 and a 30 mmfd. condenser in series between the two leads.

Turn the tuning condenser to 1400 K. C. and set the generator at 1400 K. C. Adjust the padders ⑪ and ⑥ for the maximum reading on the output meter.

When the antenna stage adjustment is made with the Receiver installed in the car, the Receiver antenna lead must be connected to the car antenna in the usual manner. Connect the signal generator output lead to a wire placed near the car antenna but not connected to it.

MODEL P-1530 *Procedure*

I. F. — Set the signal generator at exactly 260 K. C.

Connect the generator lead to the grid cap of the 6A7 tube in series with a .1 mfd. condenser (without removing the grid cap). Adjust the padders ㉑, ㉓, ㉔ and ㉖ on the first and second I. F. transformers for maximum reading on the output meter. (See Figure 6 for location of padders).

HIGH FREQUENCY AND R. F. — After padding the I. F. stages, remove the generator lead from the 6A7 tube.

Set the signal generator at 1500 K. C. and then connect the generator lead to the grid cap of the 78 R. F. tube in series with a .1 mfd. condenser (without removing the grid cap).

Place a piece of paper approximately .006" thick as a gauge between the heel of the rotor plates and the stator plates on the oscillator section of the tuning condenser. Turn the rotor plates in mesh until they strike against the paper.

With the tuning condenser in this position adjust the high frequency padder ⑯ and the R. F. padder ⑮ until the maximum reading is obtained on the output meter. This is the true setting for 1500 K. C., 150 on the dial scale.

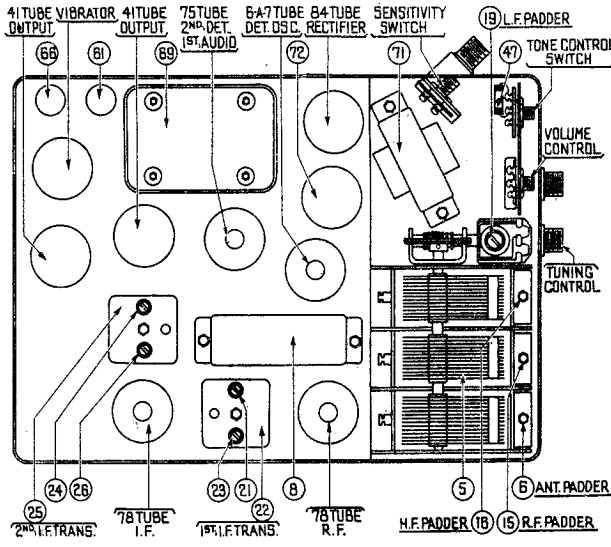

FIGURE 6

LOW FREQUENCY — Turn the tuning condenser plates in mesh to approximately 580 K. C., 58 on the dial scale and set the signal generator at 580 K. C. Roll the tuning condenser and adjust the low frequency padder screw ⑲ for maximum reading on the output meter.

HIGH FREQUENCY READJUSTMENT — Turn the tuning condenser plates out of mesh to 1500 K. C. and set the signal generator at 1500 K. C. Then adjust the high frequency padder ⑯ again for maximum reading on the output meter.

Remove the generator lead from the 78 R. F. tube.

ANTENNA — WHEN PADDING THE ANTENNA STAGE IT IS EXTREMELY IMPORTANT THAT THE PROPER DUMMY ANTENNA BE USED.

Connect the signal generator lead to the antenna socket on the Receiver using an antenna lead, Part No. L-2665 and a 30 mmfd. condenser in series between the two leads.

Turn the tuning condenser to 1400 K. C. and set the generator at 1400 K. C. Adjust the padders ⑮ and ⑥ for the maximum reading on the output meter.

When the antenna stage adjustment is made with the Receiver installed in the car, the Receiver antenna lead must be connected to the car antenna in the usual manner. Connect the signal generator output lead to a wire placed near the car antenna but not connected to it.

MODEL N1524(Nash)
Schematic, Parts
Chassis Layout

PHILCO RADIO & TELEV. CORP.

NASH - PHILCO MODEL — N-1524 TWO UNIT RECEIVER

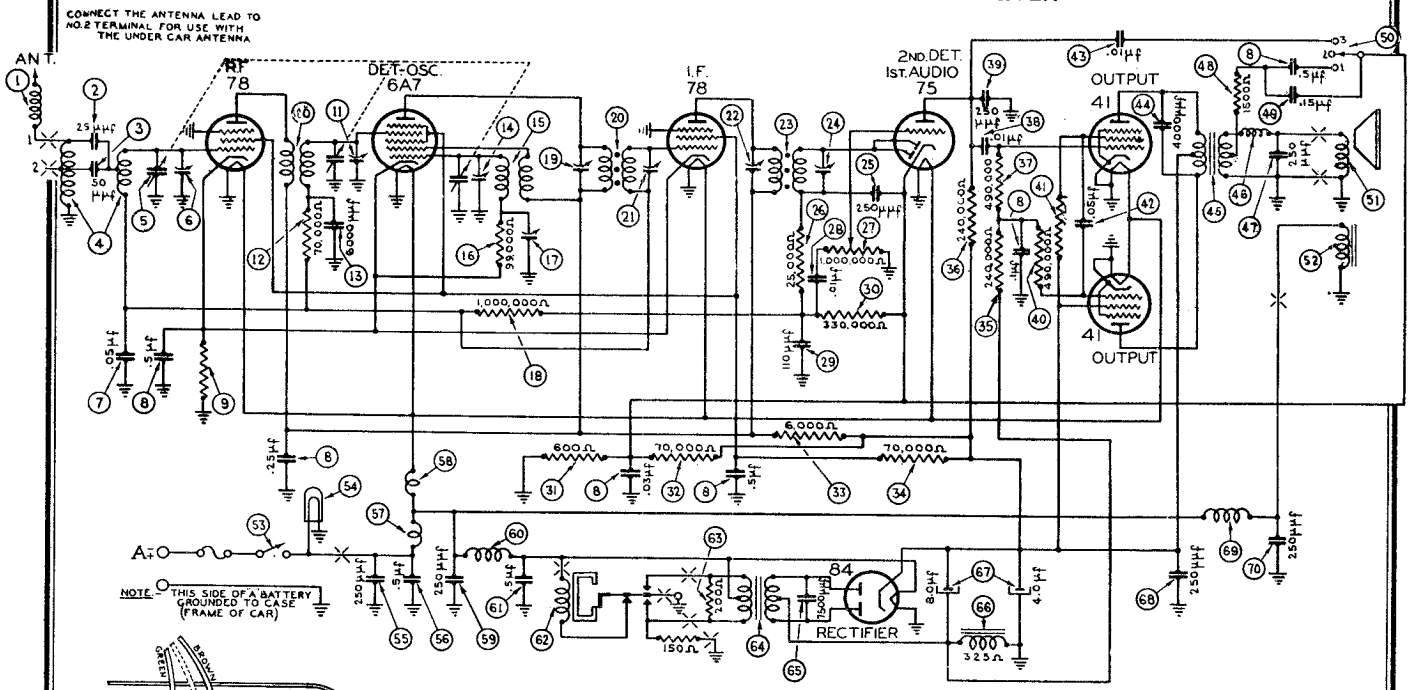

I.F.=260KC

OCTOBER 1937

MODEL N-1524 PARTS LIST

No.	Description	Part No.
①	Antenna Choke	32-1926
②	Condenser (25 mmfd.)	30-1067
③	Condenser (50 mmfd.)	30-1029
④	Antenna Transformer	32-2895
⑤	Tuning Condenser	31-2161
⑥	First Padder (on Tun. Cond.)	
⑦	Condenser (.05 mfd.)	30-4444
⑧	Condenser (.03-.1-.25-.5-.5-.5 mfd.)	30-4554
⑨	Resistor (550 ohms)	33-1280
⑩	R. F. Transformer	32-2830
⑪	Second Padder (on Tun. Cond.)	
⑫	Resistor (70,000 ohms)	33-370344
⑬	Condenser (6,000 mmfd.)	30-4467
⑭	Third Padder (on Tun. Cond.)	
⑮	Oscillator Transformer	32-2828
⑯	Resistor (99,000 ohms)	33-399344
⑰	Low Frequency Padder	31-6230
⑱	Resistor (1,000,000 ohms)	33-510344
⑲	Padder (Pri. 1st I. F. Trans.)	
⑳	First I. F. Transformer	32-2791
㉑	Padder (Sec. 1st I. F. Trans.)	
㉒	Padder (Pri. 2nd I. F. Trans.)	
㉓	Second I. F. Transformer	32-2793
㉔	Padder (Sec. 2nd I. F. Trans.)	
㉕	Condenser (250 mmfd.)	30-1032
㉖	Resistor (25,000 ohms)	33-325344
㉗	Volume Control (1,000,000 ohms)	33-5245
㉘	Condenser (.01 mfd.)	30-4479
㉙	Condenser (110 mmfd.)	30-1031
㉚	Resistor (330,000 ohms)	33-433344
㉛	Resistor (600 ohms)	33-1212
㉜	Resistor (70,000 ohms)	33-370444
㉝	Resistor (6,000 ohms)	33-260344
㉞	Resistor (70,000 ohms)	33-370344
㉟	Resistor (240,000 ohms)	33-424344
㊱	Resistor (240,000 ohms)	33-424344
㊲	Resistor (490,000 ohms)	33-449344
㊳	Condenser (.01 mfd.)	30-4169
㊴	Condenser (250 mmfd.)	30-1032
㊵	Resistor (490,000 ohms)	33-449344
㊶	Resistor (3,500 ohms)	33-235344
㊷	Condenser (.05 mfd.)	30-4454
㊸	Condenser (.01 mfd.)	30-4501
㊹	Condenser (2,000 mmfd.)	30-4177
㊺	Output Transformer	32-7928
㊻	Choke	32-1374
㊼	Condenser (250 mmfd.)	30-1032
㊽	Resistor (1,500 ohms)	33-215344
㊾	Condenser (.15 mfd.)	30-4191
㊿	Tone Control Switch	42-1389
(51)	Cone & Voice Coil	36-3586
(52)	Field Coil	32-9236
(53)	On & Off Switch	42-5617
(54)	Pilot Lamp	34-3040
(55)	Condenser (250 mmfd.)	30-1032
(56)	Condenser (.5 mfd.)	30-4474
(57)	"A" Choke	32-1374
(58)	Filament Choke	32-2729
(59)	Condenser (250 mmfd.)	30-1032
(60)	Vibrator Choke	32-2812
(61)	Condenser (.5 mfd.)	30-4474
(62)	Vibrator	41-3170-3
(63)	Resistor (200 ohms)	33-120344
(64)	Power Transformer	32-7911
(65)	Condenser (7,500 mmfd.)	30-4420
(66)	Filter Choke	32-7910
(67)	Filter Condenser (4-8 mfd.)	30-2258
(68)	Condenser (250 mmfd.)	30-1032
(69)	Choke	32-2657
(70)	Condenser (250 mmfd.)	30-1032
	Receiver Housing	38-2102
	Speaker Cable	41-3378
	Tuning Control Shaft	28-8813
	Volume Control Shaft	28-8814
	Tone Control Shaft	28-8798

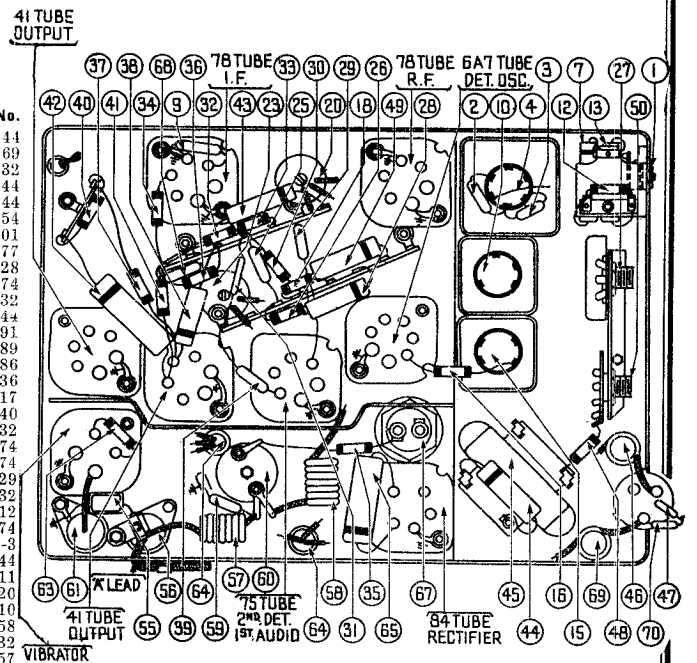

Description	Part No.
Scale Assembly	42-5786
Tuning & Volume Knob	27-4690
Tone Knob	27-4639
Knob Base	28-4184

Description	Part No.
Pilot Lamp Assembly	38-7734
Distributor Resistor	33-1196
Interference Condenser	30-4007
Interference Condenser	30-4562

©John F. Rider, Publisher

©John F. Rider, Publisher

PHILCO RADIO & TELEV. CORP.

MODEL N-1524

I. F. TRANSFORMERS AND PADDERS

The I. F. transformers are assembled complete with padding condensers.

Both the primary and the secondary padders are placed side by side in the top of the transformer shield can. The adjusting screws are accessible thru the holes in the top of the shield.

The coil windings terminate in leads instead of terminals or lugs. The color scheme of the leads is given in Figure

Procedure

I. F. — Set the signal generator at exactly 260 K. C.

Connect the generator lead to the grid cap of the 6A7 tube in series with a .1 mfd. condenser (without removing the grid clip). Adjust the padders ⑲, ㉑, ㉒ and ㉔ on the first and second I. F. transformers for maximum reading on the output meter. (See Figure 6 for location of padders).

HIGH FREQUENCY AND R. F. — After padding the I. F. stages, remove the generator lead from the 6A7 tube.

Set the signal generator at 1500 K. C. and then connect the generator lead to the grid cap of the 78 R. F. tube in series with a .1 mfd. condenser (without removing the grid clip).

Place a piece of paper approximately .006" thick as a gauge between the heel of the rotor plates and the stator plates on the oscillator section of the tuning condenser. Turn the rotor plates in mesh until they strike against the paper.

With the tuning condenser in this position, **adjust the high** frequency padder ⑭ and the R. F. padder ⑪ until the maximum reading is obtained on the output meter. This is the true setting for 1500 K. C., 150 on the dial scale.

LOW FREQUENCY — Turn the tuning condenser plates in mesh to approximately 580 K. C., 58 on the dial scale and set the signal generator at 580 K. C. Roll the tuning condenser and adjust the low frequency padder screw ⑰ for maximum reading on the output meter.

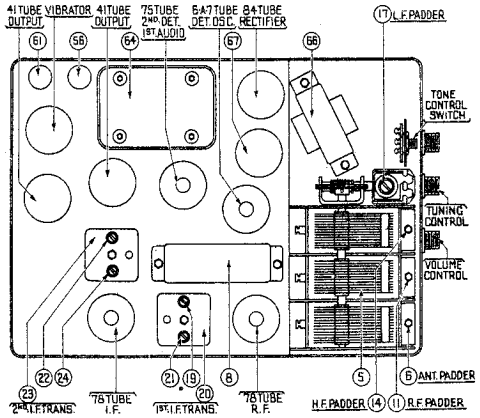

FIGURE 6

HIGH FREQUENCY READJUSTMENT — Turn the tuning condenser plates out of mesh to 1500 K. C. and set the signal generator at 1500 K. C. Then adjust the high frequency padder ⑭ again for maximum reading on the output meter.

Remove the generator lead from the 78 R. F. tube.

ANTENNA — WHEN PADDING THE ANTENNA STAGE IT IS EXTREMELY IMPORTANT THAT THE PROPER DUMMY ANTENNA BE CONSTRUCTED AND USED.

When a COWL ANTENNA is used, the green lead on the antenna transformer MUST be connected to the No. 1 terminal as shown on the label on the bottom cover of the Receiver. Connect the signal generator lead to the antenna connector on the Receiver, using an antenna lead, Part No. L-2665, and a 30 mmfd. condenser in series between the two leads.

When the UNDER-CAR ANTENNA is used, the green lead on the antenna transformer MUST be connected to the No. 2 terminal as shown on the label on the bottom cover of the Receiver. Connect the signal generator lead to the antenna connector on the Receiver, using an antenna lead, Part No. L-2665, and a 200 mmfd. condenser in series between the two

Turn the tuning condenser to 1400 K. C. and set the generator at 1400 K. C. Adjust the padders ⑪ and ⑥ for the maximum reading on the output meter.
leads.

When the antenna stage adjustment is made with the Receiver installed in the car, the Receiver antenna lead must be connected to the car antenna in the usual manner. Connect the signal generator output lead to a wire placed near the car antenna but not connected to it.

MODEL N-1514

Procedure

I. F. — Set the signal generator at exactly 260 K. C.

Connect the generator lead to the grid cap of the 6A7 tube in series with a .1 mfd. condenser (without removing the grid clip). Adjust padders ㉒, ㉔, ㉓ and ㉗ on the first and second I. F. transformer for maximum reading on the output meter. (See Figure 8 for location of padders).

HIGH FREQUENCY AND R. F. — After padding the I. F. stages remove the generator lead from the 6A7 tube.

Set the signal generator at 1550 K. C. and then connect the generator lead to the grid cap of the 78 R. F. tube in series with a .1 mfd. condenser (without removing the grid clip).

Turn the tuning condenser plates out of mesh as far as they will go.

With the tuning condenser in this position, adjust the high frequency padder ⑯ and the R. F. padder ⑪ until the maximum reading is obtained on the output meter. This is the true setting for the 1550 K. C., 155 on the dial scale.

LOW FREQUENCY — Turn the tuning condenser plates in mesh to approximately 580 K. C., 58 on the dial scale and set the signal generator at 580 K. C. Roll the tuning condenser and adjust the low frequency padder screw ⑳ for maximum reading on the output meter.

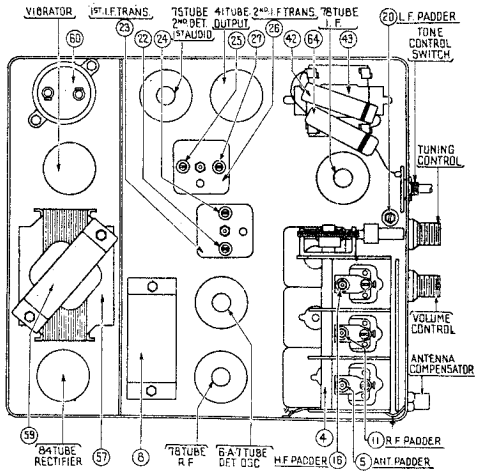

FIGURE 8

HIGH FREQUENCY READJUSTMENT — Turn the tuning condenser plates out of mesh to 1550 K. C. and set the signal generator at 1550 K. C. Then adjust the high frequency padder ⑯ again for maximum reading on the output meter.

Remove the generator lead from the 78 R. F. tube.

ANTENNA — WHEN PADDING THE ANTENNA STAGE IT IS EXTREMELY IMPORTANT THAT THE PROPER DUMMY ANTENNA BE CONSTRUCTED AND USED.

Connect the signal generator lead to the antenna connector on the Receiver using an antenna lead, Part No. L-2665, and a 25 mmfd. condenser in series between the two leads.

Turn the tuning condenser in mesh to 600 K. C. and adjust the signal generator 600 K. C. Adjust the antenna compensating condenser ⑥ for maximum reading.

Turn the tuning condenser to 1400 K. C. and set the generator at 1400 K. C. Adjust the padders ⑪ and ⑤ for the maximum reading on the output meter.

When the antenna stage adjustment is made with the Receiver installed in the car, the Receiver antenna lead must be connected to the car antenna in the usual manner. Connect the signal generator output lead to a wire placed near the car antenna but not connected to it.

When installing the Radio in a car, follow the installation instructions carefully. Tune in a weak broadcast signal at approximately 60 on the control scale. With a small screw driver adjust the antenna compensating condenser ⑥ for the maximum signal.

MODEL N-1514

PHILCO RADIO & TELEV. CORP

MODEL S1526 (Studebaker
Schematic, Parts
Chassis Layout

STUDEBAKER - PHILCO MODEL — S-1526 TWO UNIT RECEIVER

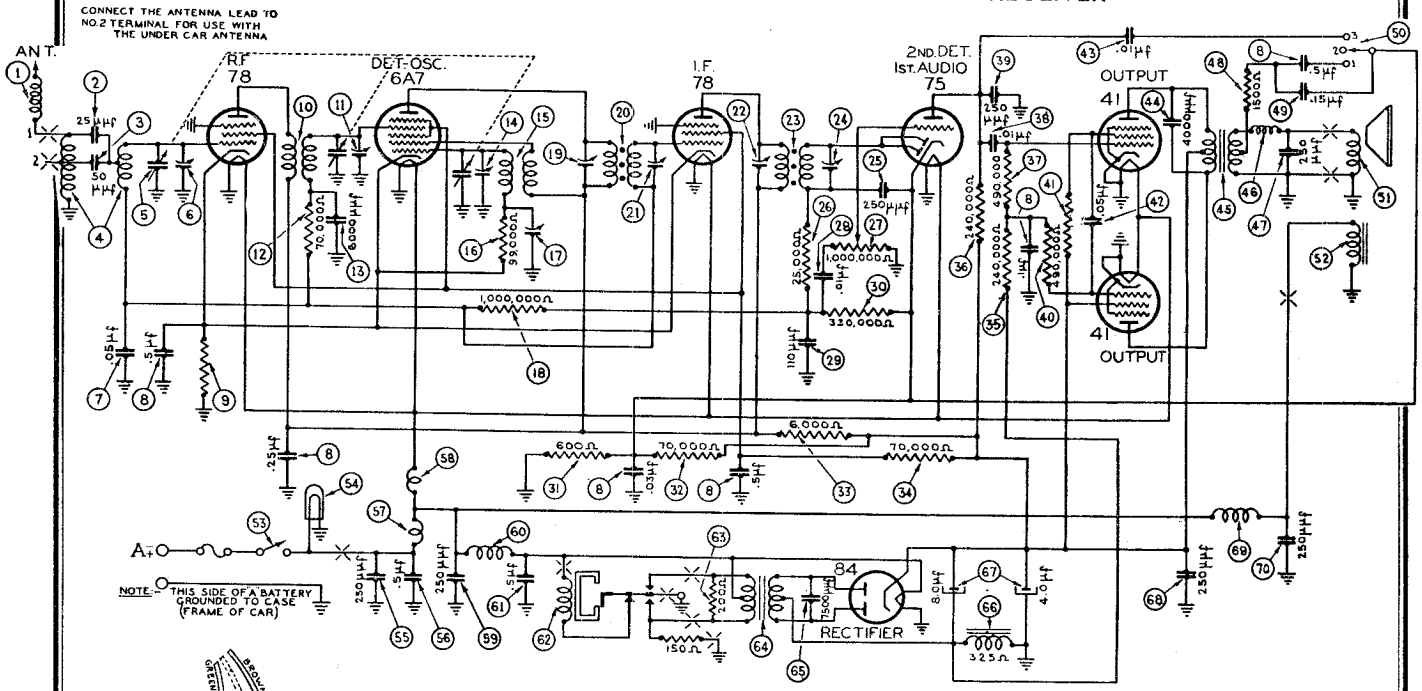

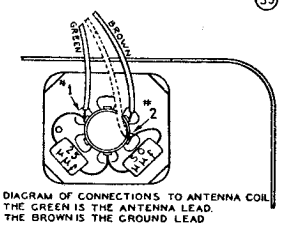

DIAGRAM OF CONNECTIONS TO ANTENNA COIL. THE GREEN IS THE ANTENNA LEAD. THE BROWN IS THE GROUND LEAD

IF.=260KC

NOVEMBER 1937

No.	Description	Part No.
	Fuse Insulator	27-7729
	Tuning Control Shaft	28-8790
	Volume Control Shaft	28-8791
	Tone Control Shaft	28-8792
	Scale Assembly	42-5779
	Speaker Cable	41-3231
	Tuning & Volume Knob	27-4689
	Tone & "On-Off" Knob	27-4618

MODEL S-1526 PARTS LIST

No.	Description	Part No.
1	Antenna Choke	32-2063
2	Condenser (25 mmfd.)	30-1067
3	Condenser (50 mmfd.)	30-1029
4	Antenna Transformer	32-2855
5	Tuning Condenser	31-2161
6	First Padder (on Tun. Cond.)	
7	Condenser (.05 mfd.)	30-4444
8	Condenser (.03-.1-.25-.5-.5-.5 mfd.)	30-4554
9	Resistor (550 ohms)	33-1280
10	R. F. Transformer	32-2830
11	Second Padder (on Tun. Cond.)	
12	Resistor (70,000 ohms)	33-370344
13	Condenser (6,000 mmfd.)	30-4467
14	Third Padder (on Tun. Cond.)	
15	Oscillator Transformer	32-2828
16	Resistor (99,000 ohms)	33-399344
17	Low Frequency Padder	31-6230
18	Resistor (1,000,000 ohms)	33-510344
19	Padder (Pri. 1st I. F. Trans.)	
20	First I. F. Transformer	32-2791
21	Padder (Sec. 1st I. F. Trans.)	
22	Padder (Pri. 2nd I. F. Trans.)	
23	Second I. F. Transformer	32-2793
24	Padder (Sec. 2nd I. F. Trans.)	
25	Condenser (250 mmfd.)	30-1032
26	Resistor (25,000 ohms)	33-325344
27	Volume Control (1,000,000 ohms)	33-5251
28	Condenser (.01 mfd.)	30-4479
29	Condenser (110 mmfd.)	30-1031
30	Resistor (330,000 ohms)	33-433344
31	Resistor (600 ohms)	33-1212
32	Resistor (70,000 ohms)	33-370444
33	Resistor (6,000 ohms)	33-260344
34	Resistor (70,000 ohms)	33-370344
35	Resistor (240,000 ohms)	33-424344
36	Resistor (240,000 ohms)	33-424344
37	Resistor (490,000 ohms)	33-449344
38	Condenser (.01 mfd.)	30-4514
39	Condenser (250 mmfd.)	30-1032
40	Resistor (490,000 ohms)	33-449344
41	Resistor (3,500 ohms)	33-235344
42	Condenser (.05 mfd.)	30-4454
43	Condenser (.01 mfd.)	30-4501
44	Condenser (2,000 mmfd.)	30-4177
45	Output Transformer	32-7928
46	Choke	32-1374
47	Condenser (250 mmfd.)	30-1032
48	Resistor (1,500 ohms)	33-215344
49	Condenser (.15 mfd.)	30-4191
50	Tone Control Switch	42-1389
51	Cone & Voice Coil	36-3526
52	Field Coil	32-9236
53	On & Off Switch	42-1369
54	Pilot Lamp	34-2039
55	Condenser (250 mmfd.)	30-1032
56	Condenser (.5 mfd.)	30-4474
57	"A" Choke	32-1374
58	Filament Choke	32-2729
59	Condenser (250 mmfd.)	30-1032
60	Vibrator Choke	32-2812
61	Condenser (.5 mfd.)	30-4474
62	Vibrator	41-3170-3
63	Resistor (200 ohms)	33-120344
64	Power Transformer	32-7911
65	Condenser (7,500 mmfd.)	30-4420
66	Filter Choke	32-7910
67	Filter Condenser (4-8 mfd.)	30-2258
68	Condenser (250 mmfd.)	30-1032
69	Choke	32-2657
70	Condenser (250 mmfd.)	30-1032
	Receiver Housing	38-2058
	Four Prong Socket	27-6044
	Five Prong Socket	27-6035
	Six Prong Socket	27-6036
	Seven Prong Socket	27-6037
	Inductive Suppressor	32-2250
	Interference Condenser	30-4007
	Fuse	7227

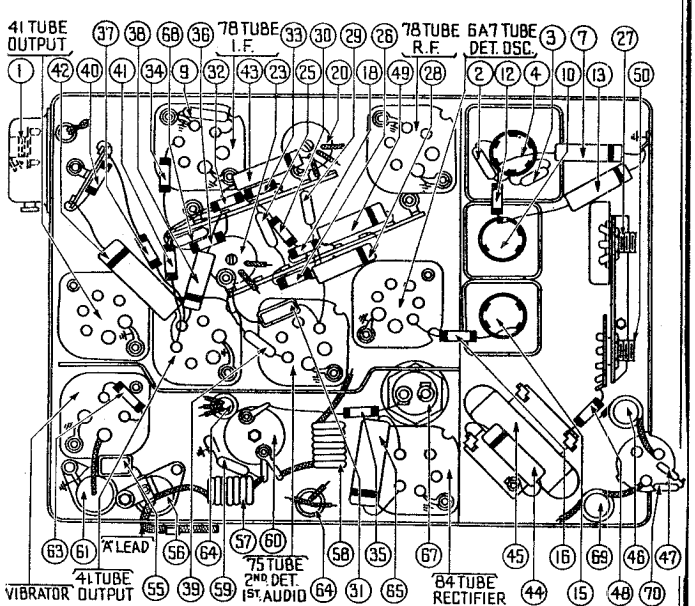

©John F. Rider, Publisher

MODEL S1526 (Studebaker) PHILCO RADIO & TELEV. CORP.

Socket, Trimmers, Controls
Alignment, Parts

©John F. Rider, Publisher

I. F. TRANSFORMERS AND PADDERS

The I. F. Transformers are assembled complete with padding condensers.

Both the primary and secondary padders are placed side by side in the top of the transformer shield can. The adjusting screws are accessible thru the holes in the top of the shield. (See Figure 6).

The coil windings terminate in leads instead of terminals or lugs. The color scheme of the leads is given in Figure 5.

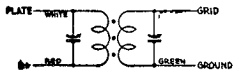

FIGURE 5

If replacements are ever necessary, replace the entire coil assembly, 32-2791 for the first I. F. stage and 32-2793 for the second I. F. stage. Neither the coil nor the padders will be furnished separately. Order only by the above numbers.

MODEL S-1526 ADJUSTMENTS

All padding adjustments are carefully made at the factory and ordinarily no readjustments are necessary. However, when readjustments are required, the procedure given below must be followed in detail.

Equipment

Fully charged heavy duty storage battery or 6-volt power pack, 048A or 099 Philco Set Tester, 3164 Padding wrench, 27-7159 Padding screw driver.

General

OUTPUT METER — The output meter must be connected by means of an adapter to the plate of the type 41 output tube and to the Receiver chassis.

SIGNAL GENERATOR — With the Receiver and signal generator set up for operation at the prescribed frequency, turn the Receiver volume control on full and set the signal generator attenuator so that a half scale reading is obtained on the output meter. The signal in the speaker should be audible but not loud.

The shielding on the signal generator output lead must be connected to the Receiver housing.

Procedure

I. F. — Set the signal generator at exactly 260 K. C. Connect the generator lead to the grid cap of the 6A7 tube in series with a .1 mfd. condenser (without removing the grid clip). Adjust the padders ⑲, ㉑, ㉒ and ㉔ on the first and second I. F. transformer for maximum reading on the output meter. (See Figure 6 for location of padders).

HIGH FREQUENCY AND R. F. — After padding the I. F. stages remove the generator lead from the 6A7 tube.

Set the signal generator at 1500 K. C. and then connect the generator lead to the grid cap of the 78 R. F. tube in series with a .1 mfd. condenser (without removing the grid clip).

Place a piece of paper approximately .006" thick as a gauge between the heel of the rotor plates and the stator plates on the oscillator section of the tuning conednser. Turn the rotor plates in mesh until they strike against the paper.

With the tuning condenser in this position, adjust the high frequency padder ⑭ and the R. F. padder ⑪ until the maximum reading is obtained on the output meter. This is the true setting for 1500 K. C., 150 on the dial scale.

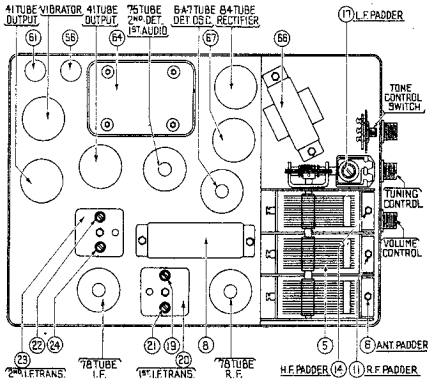

FIGURE 6

LOW FREQUENCY — Turn the tuning condenser plates in mesh to approximately 580 K. C., 58 on the dial scale, and set the signal generator at 580 K. C. Roll the tuning condenser and adjust the low frequency padder screw ⑰ for maximum reading on the output meter.

HIGH FREQUENCY READJUSTMENT — Turn the tuning condenser plates out of mesh to 1500 K. C. and set the signal generator at 1500 K. C. Then adjust the high frequency padder ⑭ again for maximum reading on the output meter.

Remove the generator lead from the 78 R. F. tube.

ANTENNA — WHEN PADDING THE ANTENNA STAGE IT IS EXTREMELY IMPORTANT THAT THE PROPER DUMMY ANTENNA BE CONSTRUCTED AND USED.

When a COWL ANTENNA is used, the green lead on the antenna transformer MUST be connected to the No. 1 terminal as shown on the label on the bottom cover of the Receiver. Connect the signal generator lead to the antenna connector on the Receiver, using an antenna lead, Part No. L-2665, and a 30 mmfd. condenser in series between the two leads.

When the UNDER-CAR ANTENNA is used, the green lead on the antenna transformer MUST be connected to the No. 2 terminal as shown on the label on the bottom cover of the Receiver. Connect the signal generator lead to the antenna connector on the Receiver, using an antenna lead, Part No. L-2665, and a 200 mmfd. condenser in series between the two leads.

Turn the tuning condenser to 1400 K. C. and set the generator at 1400 K. C. Adjust the padders ⑪ and ⑥ for the maximum reading on the output meter.

When the antenna stage adjustment is made with the Receiver installed in the car, the Receiver antenna lead must be connected to the car antenna in the usual manner. Connect the signal generator output lead to a wire placed near the car antenna but not connected to it.

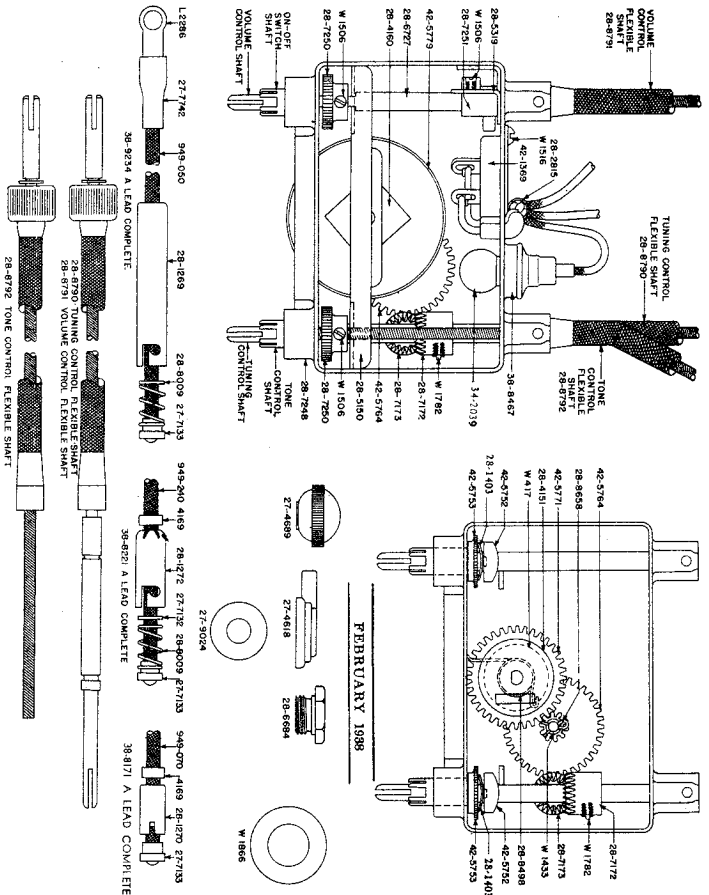

PARTS LIST AND PRICES (Prices Subject to Change Without Notice)

PART NUMBER	DESCRIPTION	LIST PRICE
L-2286	Lug	$ .02
W-417	Washer	per 100 .50
W-1433	Washer	per 100 .15
W-1506	Set Screw	per 100 1.60
W-1516	Screw	per 100 1.80
W-1782	Set Screw	per 100 2.50
W-1866	Washer	per 100 1.00
4169	Rubber Washer	per 100 1.20
27-4618	Switch & Tone Knob	.25
27-4689	Tuning & Volume Knob	.15
27-7132	Washer	per 100 .40
27-7133	Ferrule	.01
27-7182	Felt Washer	per 100 .30
27-7742	Sleeve	*
27-9024	Washer	per 100 .40
28-1269	Fuse Housing	.01
28-1270	Housing	.01
28-1272	Housing	per 100 .85
28-1403	Spring	per 100 1.25
28-2815	Clamp	.01
28-4151	Friction Washer	.02
28-4160	Friction Spring	.01
28-5149	Cover	.19
28-5150	Plate	.05

*Prices not available at this time.

PART NUMBER	DESCRIPTION	LIST PRICE
28-5319	Switch Stop	*
28-6684	Gland Nut	.10
28-6727	Switch Operating Shaft	*
28-7172	Miter Gear	.10
28-7173	Miter Idler Gear	.10
28-7248	Control Housing	*
28-7250	Gear	.10
28-7251	Switch Lever	.15
28-8009	Spring	per 100 .50
28-8498	Anti Backlash Spring	.10
28-8658	Spring	.03
28-8790	Tuning Shaft	.90
28-8791	Volume Shaft	.90
28-8792	Tone Shaft	.90
34-2039	Pilot Lamp	.20
38-8171	"A" Lead	.10
38-8221	"A" Lead	.20
38-8467	Pilot Lamp Assembly	.30
38-9234	"A" Lead	*
42-1369	On-Off Switch	.35
42-5752	Retainer	.15
42-5753	Gear & Sleeve	.20
42-5764	Intermediate Gear	.20
42-5771	Drum Shaft & Gear	.15
42-5779	Scale Assembly	.35

MODEL G1528(Graham)
Schematic, Parts
Chassis Layout

PHILCO RADIO & TELEV. CORP.

GRAHAM - PHILCO MODEL — G-1528 TWO UNIT RECEIVER

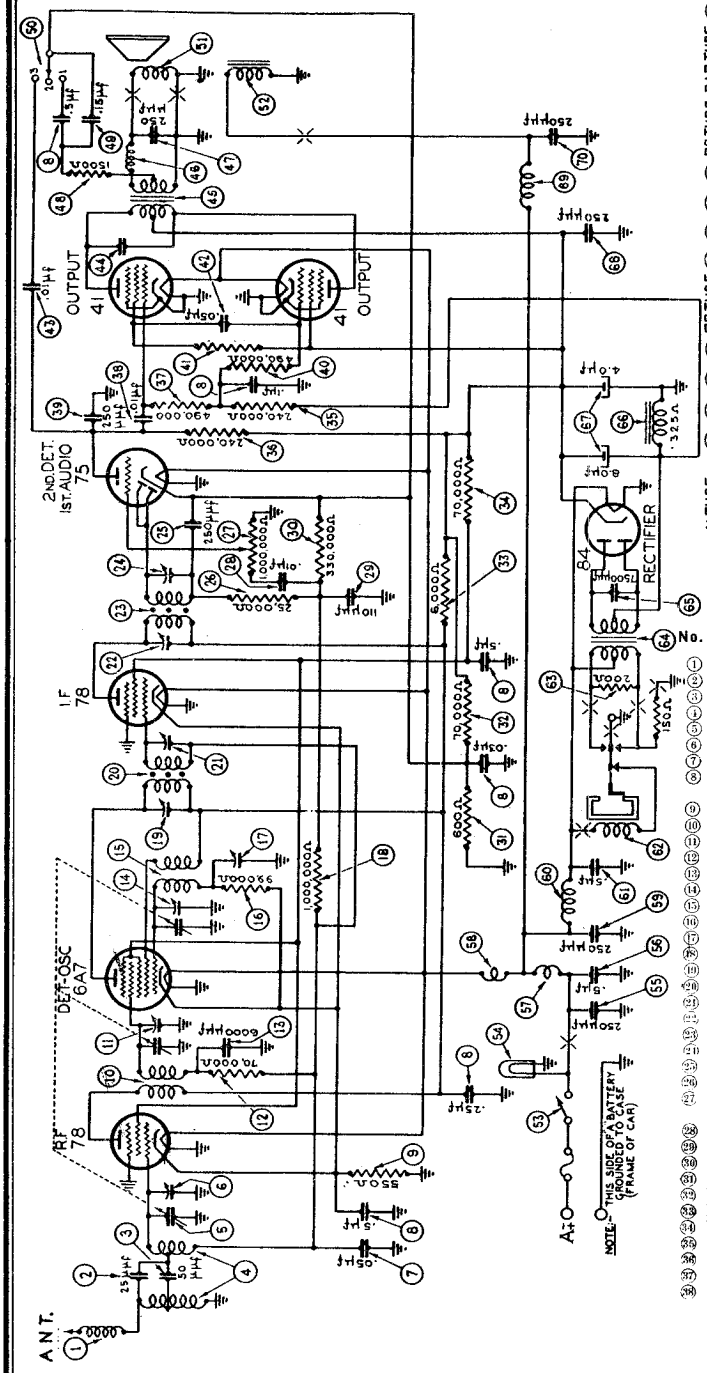

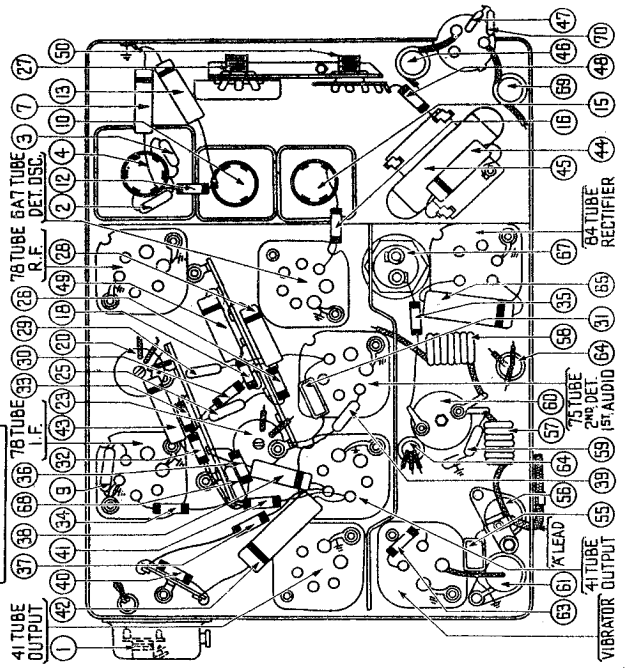

FIGURE 2

MODEL G-1528 PARTS LIST

No.	Description	Part No.
①	Antenna Choke	32-2063
②	Condenser (25 mfd.)	30-1067
③	Condenser (50 mmfd.)	30-1029
④	Antenna Transformer	32-2936
⑤	Tuning Condenser	31-2161
⑥	First Padder (on Tun. Cond.)	
⑦	Condenser (.05 mfd.)	30-4444
⑧	Condenser (.03-.1-.25-.5-.5-.5 mfd.)	30-4554
⑨	Resistor (550 ohms)	33-155331
⑩	R. F. Transformer	32-2830
⑪	Second Padder (on Tun. Cond.)	
⑫	Resistor (70,000 ohms)	33-370344
⑬	Condenser (6,000 mmfd.)	30-4467
⑭	Third Padder (on Tun. Cond.)	
⑮	Oscillator Transformer	32-2828
⑯	Resistor (99,000 ohms)	33-399344
⑰	Low Frequency Padder	31-6230
⑱	Resistor (1,000,000 ohms)	33-510344
⑲	Padder (Pri. 1st I. F. Trans.)	
⑳	First I. F. Transformer	32-2791
㉑	Padder (Sec. 1st I. F. Trans.)	
㉒	Padder (Pri. 2nd I. F. Trans.)	
㉓	Second I. F. Transformer	32-2793
㉔	Padder (Sec. 2nd I. F. Trans.)	
㉕	Condenser (250 mmfd.)	30-1032
㉖	Resistor (25,000 ohms)	33-325344
㉗	Volume Control (1,000,000 ohms)	33-5245
㉘	Condenser (.01 mfd.)	30-4479
㉙	Condenser (110 mmfd.)	30-1031
㉚	Resistor (330,000 ohms)	33-433344
㉛	Resistor (600 ohms)	33-160331
㉜	Resistor (70,000 ohms)	33-370444
㉝	Resistor (6,000 ohms)	33-260344
㉞	Resistor (70,000 ohms)	33-370344
㉟	Resistor (240,000 ohms)	33-424344
㊱	Resistor (240,000 ohms)	33-424344
㊲	Resistor (490,000 ohms)	33-449344
㊳	Condenser (.01 mfd.)	30-4514
㊴	Condenser (250 mmfd.)	30-1032
㊵	Resistor (490,000 ohms)	33-449344
㊶	Resistor (3,500 ohms)	33-235344
㊷	Condenser (.05 mfd.)	30-4454
㊸	Condenser (.01 mfd.)	30-4501
㊹	Condenser (4000 mmfd.)	30-4185
㊺	Output Transformer	32-7928
㊻	Choke	32-1374
㊼	Condenser (250 mmfd.)	30-1032
㊽	Resistor (1,500 ohms)	33-215344
㊾	Condenser (.15 mfd.)	30-4191
㊿	Tone Control Switch	42-1389
(51)	Cone and Voice Coil	45-2608
(52)	Field Coil	32-9263
(53)	On and Off Switch	42-5617-3
(54)	Pilot Lamp	34-2039
(55)	Condenser (250 mmfd.)	30-1032
(56)	Condenser (.5 mfd.)	30-4474
(57)	"A" Choke	32-1374
(58)	Filament Choke	32-2729
(59)	Condenser (250 mmfd.)	30-1032
(60)	Vibrator Choke	32-2812
(61)	Condenser (.5 mfd.)	30-4474
(62)	Vibrator	41-3170-3
(63)	Resistor (200 ohms)	33-120344
(64)	Power Transformer	32-7911
(65)	Condenser (7,500 mmfd.)	30-4420
(66)	Filter Choke	32-7910
(67)	Filter Condenser (4-8 mfd.)	30-2258
(68)	Condenser (250 mmfd.)	30-1032
(69)	Choke	32-2657
(70)	Condenser (250 mmfd.)	30-1032
	Receiver Housing	38-2179
	Four Prong Socket	27-6044
	Five Prong Socket	27-6035
	Six Prong Socket	27-6036
	Seven Prong Socket	27-6037
	Inductive Suppressor	32-2250
	Interference Condenser	30-4007
	Fuse	7227

No.	Description	Part No.
	Fuse Insulator	27-7729
	Tuning Control Shaft	28-8813
	Volume Control Shaft	28-8864
	Tone Control Shaft	28-8798
	Scale Assembly	42-5829
	Speaker Cable	36-4034
	Speaker Mtg. Plate	38-9463
	Tuning & Volume Knob	27-4705
	Tone Knob	28-7212
	Knob Base	28-4184

DECEMBER 1937

©John F. Rider, Publisher

©John F. Rider, Publisher

MODEL G-1528

ALIGNMENT

I. F. TRANSFORMERS AND PADDERS

The I. F. Transformers are assembled complete with padding condensers.

Both the primary and secondary padders are placed side by side in the top of the transformer shield can. The adjusting screws are accessible thru the holes in the top of the shield. (See Figure 4).

The coil windings terminate in leads instead of terminals or lugs. The color scheme of the leads is given in Figure 3.

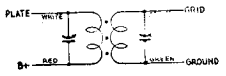

FIGURE 3

If replacements are ever necessary, replace the entire coil assembly, 32-2791 for the first I. F. stage and 32-2793 for the second I. F. stage. Neither the coil nor the padders will be furnished separately. Order only by the above numbers.

MODEL G-1528 ADJUSTMENTS

All padding adjustments are carefully made at the factory and ordinarily no readjustments are necessary. However, when readjustments are required, the procedure given below must be followed in detail.

Equipment

Fully charged heavy duty storage battery or 6-volt power pack, 648A or 999 Philco Set Tester, 3164 Padding wrench, 27-7159 Padding screw driver.

General

OUTPUT METER — The output meter must be connected by means of an adapter to the plate of the type 41 output tube and to the Receiver chassis.

SIGNAL GENERATOR — With the Receiver and signal generator set up for operation at the prescribed frequency, turn the Receiver volume control on full and set the signal generator attenuator so that a half scale reading is obtained on the output meter. The signal in the speaker should be audible but not loud.

The shielding on the signal generator output lead must be connected to the Receiver housing.

Procedure

I. F. — Set the signal generator at exactly 260 K. C. Connect the generator lead to the grid cap of the 6A7 tube in series with a .1 mfd. condenser (without removing the grid clip). Adjust the padders ⑯, ㉑, ㉒ and ㉓ on the first and second I. F. transformers for maximum reading on the output meter. (See Figure 4 for location of padders).

HIGH FREQUENCY AND R. F. — After padding the I. F. stages remove the generator lead from the 6A7 tube.

Set the signal generator at 1500 K. C. and then connect the generator lead to the grid cap of the 78 R. F. tube in series with a .1 mfd. condenser (without removing the grid clip).

Place a piece of paper approximately .006" thick as a gauge between the heel of the rotor plates and the stator plates on the oscillator section of the tuning condenser. Turn the rotor plates in mesh until they strike against the paper.

With the tuning condenser in this position, adjust the high frequency padder ⑭ and the R. F. padder ⑪ until the maximum reading is obtained on the output meter. This is the true setting for 1500 K. C., 150 on the dial scale.

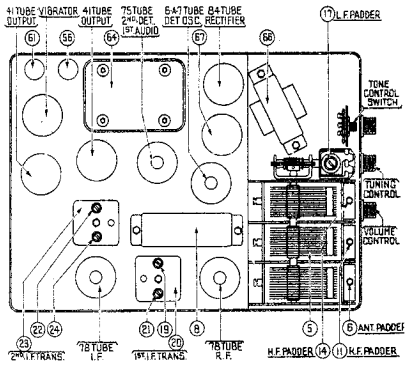

FIGURE 4

LOW FREQUENCY — Turn the tuning condenser plates in mesh to approximately 580 K. C., 58 on the dial scale, and set the signal generator at 580 K. C. Roll the tuning condenser and adjust the low frequency padder screw ⑰ for maximum reading on the output meter.

HIGH FREQUENCY READJUSTMENT — Turn the tuning condenser plates out of mesh to 1500 K. C. and set the signal generator at 1500 K. C. Then adjust the high frequency padder ⑭ again for maximum reading on the output meter.

Remove the generator lead from the 78 R. F. tube.

ANTENNA — WHEN PADDING THE ANTENNA STAGE IT IS EXTREMELY IMPORTANT THAT THE PROPER DUMMY ANTENNA BE CONSTRUCTED AND USED.

Connect the signal generator lead to the antenna connector on the Receiver, using an antenna lead, Part No. L-2665, and a 35 mmfd. condenser in series between the two leads.

Turn the tuning condenser to 1400 K. C. and set the generator at 1400 K. C. Adjust the padders ⑬ and ⑥ for the maximum reading on the output meter.

When the antenna stage adjustment is made with the Receiver installed in the car, the Receiver antenna lead must be connected to the car antenna in the usual manner. Connect the signal generator output lead to a wire placed near the car antenna but not connected to it.

GRAHAM CONTROL — MODEL G-1528

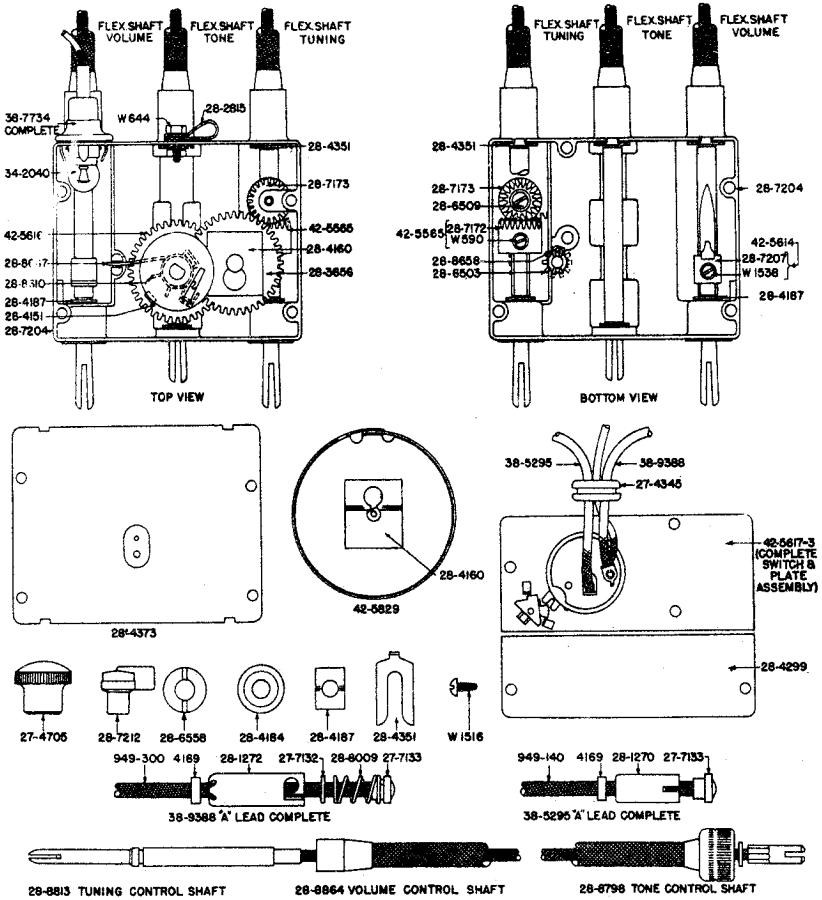

PARTS LIST AND PRICES (Prices Subject to Change Without Notice)

Part No.	Description	List Price
W-590	Screw ..... per 100	$2.00
W-644	Screw ..... per 100	1.50
W-1518	Screw ..... per 100	1.30
W-1538	Screw ..... per 100	1.80
4169	Washer ..... per 100	1.20
27-4345	Grommet	.08
27-4705	Tuning & Volume Knob	.20
27-7132	Washer ..... per 100	.40
27-7133	Terminal	.01
28-1270	Housing	.01
28-1272	Housing ..... per 100	.85
28-2815	Clamp	.01
28-3656	Gear	.02
28-4151	Friction Washer	.02
28-4160	Spring	.01
28-4184	Knob Base	.02
28-4187	Washer	.01
28-4289	Cover	.03
28-4351	Shaft Retainer	.01
28-4373	Cover	.10
28-6508	Gear	.05
28-6509	Screw	.03
28-6558	Gland Nut	.25
28-7172	Miter Gear	.10
28-7173	Miter Idler Gear	.10
28-7204	Housing	.50
28-7207	Switch Arm	.05
28-7212	Tone Knob	.25
28-8009	Spring ..... per 100	.50
28-8810	Spring	.03
28-8647	Anti-back Lash Spring	.02
28-8658	Spring	.03
28-8798	Tone Shaft	1.00
28-8813	Tuning Shaft	1.00
28-8864	Volume Shaft	*
34-2040	Pilot Lamp	.09
38-5295	"A" Lead	.15
38-7734	Pilot Lamp Assembly	.35
38-9388	"A" Lead	.20
42-5565	Miter Gear Assembly	.15
42-5614	Switch Arm Assembly	.15
42-5616	Drum Shaft & Gear	.10
42-5617-3	On-Off Switch	.40
42-5829	Dial ... sembly	*

* Prices not available at this time.

PHILCO RADIO & TELEV. CORP.

MODEL C1423(Chrysler) Schematic, Socket, Trimmers Layout, Alignment, Parts

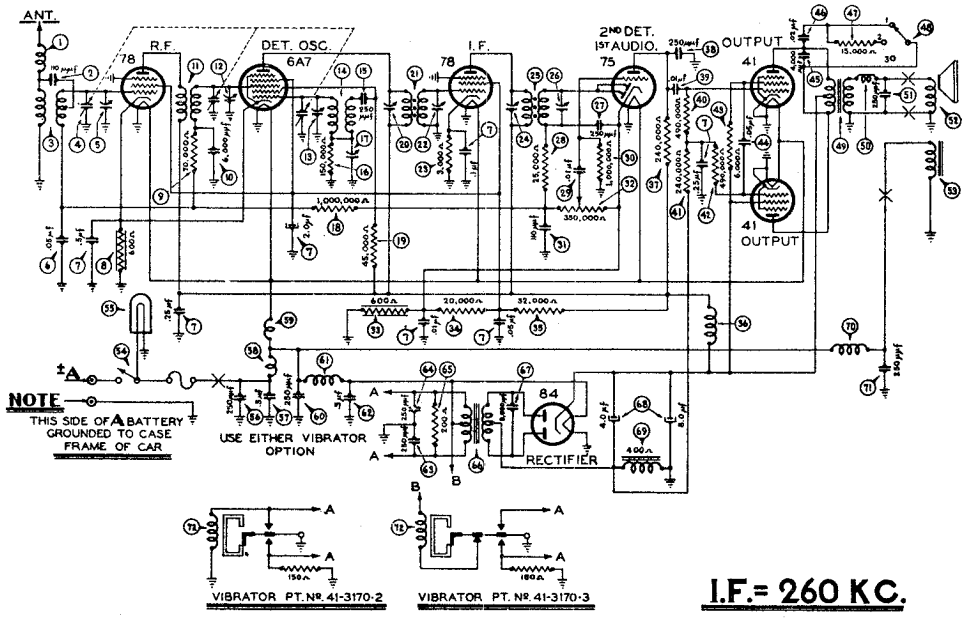

I.F.= 260 KC.

The Model C-1423 is a Special Custom-Built Receiver used exclusively by the Chrysler Corporation in the 1937 Chrysler Airflow cars.

Top cover assembly	42-5413
Tuning & volume knob	27-4277
Tone knob	27-4279
Antenna loom	38-7295
Dial pointer assembly	38-4135
Interference resistor	30-4466
Interference condenser	30-4001
Fuse	7237
Fuse holder	27-7131
Stud (speaker mtg.)	28-6698
Nut (speaker mtg.)	W-55
Nut (control mtg.)	W-317
Receiver mtg. bracket	28-2751

OPERATION	SIGNAL GENERATOR FREQUENCY	SIGNAL GENERATOR CONNECTION	DUMMY CAPACITY	SPECIAL INSTRUCTIONS	ADJUST PADDER
1	260 K.C.	To Grid of 78 Tube—I.F. Stage	.1 Mfd. Condenser in Series with Generator Lead	No Antenna Connection	1 - 2
2	260 K.C.	To Grid of 6A7 Tube	.1 Mfd. Condenser in Series with Generator Lead	No Antenna Connection	3 - 4 1 - 2
3	1550 K.C.	To Grid of 78 Tube—R.F. Stage	.1 Mfd. Condenser in Series with Generator Lead	No Antenna Connection Note 1	7 - 6
4	580 K.C.	To Grid of 78 Tube—R.F. Stage	.1 Mfd. Condenser in Series with Generator Lead	No Antenna Connection Set Tuning Condensers at 580 K. C.	8 Note 2
5	1550 K.C.	To Grid of 78 Tube—R.F. Stage	.1 Mfd. Condenser in Series with Generator Lead	Set Tuning Condensers at 1550 K. C.	7
6	1400 K.C.	Note 4 Connect Antenna Lead to Cowl Antenna Receptacle	Note 4	Set Tuning Condensers at 1400 K. C.	6 - 5

Adjust for maximum reading on the output meter.

NOTE 1—Turn the condenser rotor plates completely out of mesh. Use a piece of bond letterhead paper as a gauge between the heel of the rotor plates and the stator plates and turn the condenser plates in mesh until they strike against the paper.

NOTE 2—Rock the tuning condenser while adjusting the low frequency padder. Tune the condenser to the signal and adjust the padder for maximum output. Rotate the tuning condenser back and forth slightly for maximum output. Then re-adjust the padder for maximum output. Repeat this procedure until no further improvement is noticed.

NOTE 4—Connect the antenna lead, Part No. 41-3191, to the antenna receptacle on the Receiver in series with the correct dummy capacity condenser. For the L-1427, L-1429 and L-1440 use a 30 mmfd. condenser, for the C-1423 use a 1700 mmfd. condenser.

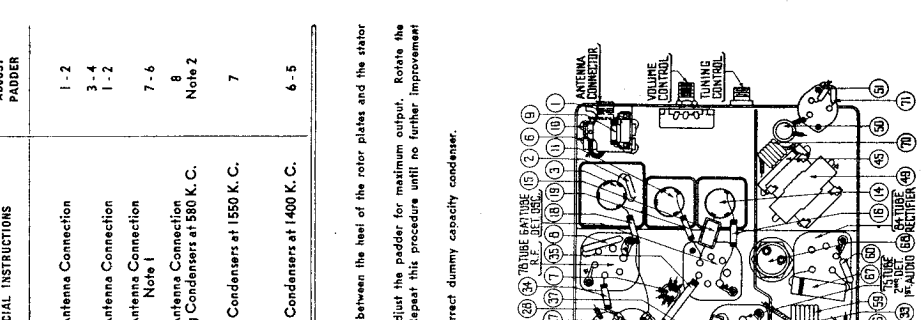

PARTS LIST

No.	Description	Part No.
①	Antenna choke	38-8517
②	Condenser (110 mmfd.)	30-1031
③	Antenna condenser	31-1031
④	Tuning condenser	31-1085
⑤	First padder (on tun. cond.)	30-4444
⑥	Condenser (.01 mfd.)	30-4494
⑦	Condenser (.05 mfd.)	30-4444
⑧	Resistor (600 ohms)	33-1212
⑨	Resistor (70,000 ohms)	33-3103344
⑩	Condenser (6000 mmfd.)	30-4445
⑪	R. F. transformer	32-2231
⑫	Second padder (on tun. cond.)	32-2232
⑬	Third padder (on tun. cond.)	30-1032
⑭	Oscillator transformer	32-2233
⑮	Condenser (250 mmfd.)	30-1032
⑯	Resistor (150,000 ohms)	33-413344
⑰	Low frequency padder	31-1036
⑱	Resistor (1,000,000 ohms)	33-1044
⑲	Resistor (45,000 ohms)	33 215311
⑳	Padder (Pri. 1st I. F. trans.)	32-2235
㉑	First I. F. transformer	32-2236
㉒	Padder (Sec. 1st I. F. trans.)	33-230344
㉓	Resistor (3000 ohms)	33-1032
㉔	Second I. F. transformer	32-2167
㉕	Padder (Sec. 2nd I. F. trans.)	30-4419
㉖	Condenser (250 mmfd.)	30-1032
㉗	Resistor (25,000 ohms)	33-323344
㉘	Resistor (1,000,000 ohms)	33-3103344
㉙	Resistor (1,000,000 ohms)	33-3103344
㉚	Condenser (110 mmfd.)	30-1031
㉛	Volume control (350,000 ohms)	38-5139
㉜	Resistor (600 ohms)	33-1212
㉝	Resistor (70,000 ohms)	33-3103344
㉞	Resistor (23,000 ohms)	33-233344
㉟	Resistor (240,000 ohms)	33-424344
㊱	Condenser (250 mmfd.)	30-1032
㊲	Condenser (.1 mfd.)	30-4414
㊳	Condenser (.02 mfd.)	30-4445
㊴	Resistor (490,000 ohms)	33-449344
㊵	Resistor (240,000 ohms)	33-424344
㊶	Resistor (490,000 ohms)	33-449344
㊷	Resistor (70,000 ohms)	33-3103344
㊸	Condenser (.02 mfd.)	30-4445
㊹	Condenser (.1 mfd.)	30-4414
㊺	Resistor (15,000 ohms)	33-315344
㊻	Volume control (1,000,000 ohms)	38-5133
㊼	Output transformer	32-2235
㊽	Choke	32-1604
㊾	Condenser (250 mmfd.)	30-1032
㊿	Cone & voice coil	36-3158
(51)	Field coil assembly	36-5133
(52)	On & Off switch	42-5408
(53)	Pilot lamp	84-2039
(54)	Condenser (250 mmfd.)	30-1032
(55)	Condenser (.1 mfd.)	30-4414
(56)	Condenser (.1 mfd.)	30-4414
(57)	Filament choke	32-1574
(58)	Condenser (250 mmfd.)	30-1032
(59)	Vibrator choke	32-2249
(60)	Condenser (.5 mfd.)	30-4474
(61)	Condenser (250 mmfd.)	30-1032
(62)	Condenser (100 mmfd.)	30-1028
(63)	Resistor (200 ohms)	33-120344
(64)	Power transformer	32-2240
(65)	Condenser (8000 mmfd.)	30-4420
(66)	Filter condenser (4-8 mfd.)	30-2179
(67)	Filter choke	32-2232
(68)	Choke	32-2239
(69)	Condenser (200 mmfd.)	30-1030
(70)	Vibrator (OPTIONAL)	41-3170-2
(71)	Four-prong socket	27-6044
(72)	Five-prong socket	27-6045
(73)	Six-prong socket	27-6046
(74)	Seven-prong socket	27-6047
(75)	Scale assembly	42-5437
(76)	Tuning shaft	28-8491
(77)	Volume shaft	28-8727
(78)	Tone shaft	28-8728

©John F. Rider, Publisher

MODEL P1530(Packard)
Schematic, Parts
Chassis Layout

PHILCO RADIO & TELEV. CORP.

PACKARD - PHILCO MODEL P-1530 TWO UNIT RECEIVER

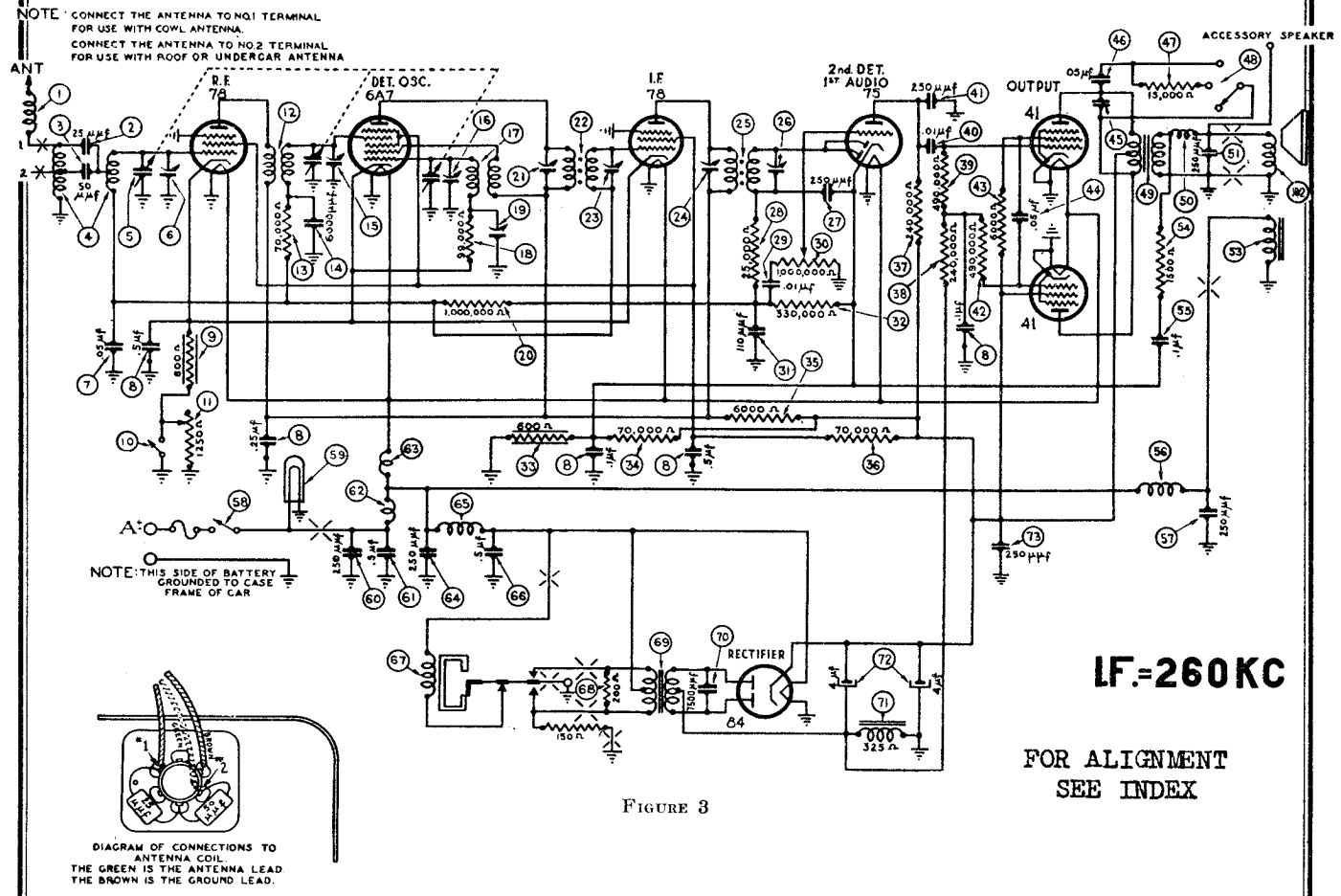

FIGURE 3

PARTS LIST — MODEL P-1530

No.	Description	Part No.
①	Antenna Choke	32-2063
②	Condenser (25 mmfd.)	30-1067
③	Condenser (50 mmfd.)	30-1029
④	Antenna Transformer	32-2833
⑤	Tuning Condenser	31-2111
⑥	First Padder (on Tun. Cond.)	
⑦	Condenser (.05 mfd.)	30-4444
⑧	Condenser (.1-.1-.25-.5-.5 mfd.)	30-4547
⑨	Resistor (600 ohms)	33-1212
⑩	Sensitivity Switch	42-1378
⑪	Sensitivity Control	33-5248
⑫	R. F. Transformer	32-2830
⑬	Resistor (70,000 ohms)	33-370344
⑭	Condenser (6,000 mmfd.)	30-4445
⑮	Second Padder (on Tun. Cond.)	
⑯	Third Padder (on Tun. Cond.)	
⑰	Oscillator Transformer	32-2828
⑱	Resistor (99,000 ohms)	33-399344
⑲	Low Frequency Padder	31-6230
⑳	Resistor (1,000,000 ohms)	33-510344
㉑	Padder (Pri. 1st I. F. Trans.)	
㉒	First I. F. Transformer	32-2791
㉓	Padder (Sec. 1st I. F. Trans.)	
㉔	Padder (Pri. 2nd I. F. Trans.)	
㉕	Second I. F. Transformer	32-2793
㉖	Padder (Sec. 2nd I. F. Trans.)	
㉗	Condenser (250 mmfd.)	30-1032
㉘	Resistor (25,000 ohms)	33-325344
㉙	Condenser (.01 mfd.)	30-4479
㉚	Volume Control (1,000,000 ohms)	33-5245
㉛	Condenser (110 mmfd.)	30-1031
㉜	Resistor (330,000 ohms)	33-433344
㉝	Resistor (600 ohms)	33-1212
㉞	Resistor (70,000 ohms)	33-370344
㉟	Resistor (6,000 ohms)	33-260344
㊱	Resistor (70,000 ohms)	33-370344
㊲	Resistor (240,000 ohms)	33-424344
㊳	Resistor (240,000 ohms)	33-424344
㊴	Resistor (490,000 ohms)	33-449344
㊵	Condenser (.01 mfd.)	30-4514
㊶	Condenser (250 mmfd.)	30-1032
㊷	Resistor (490,000 ohms)	33-449344
㊸	Resistor (6,000 ohms)	33-260344
㊹	Condenser (.05 mfd.)	30-4454
㊺	Condenser (4,000 mmfd.)	30-4185
㊻	Condenser (.05 mfd.)	30-4495
㊼	Resistor (15,000 ohms)	33-315344
㊽	Tone Control Switch	42-1377
㊾	Output Transformer	32-7909
㊿	Choke	32-1374
(51)	Condenser (250 mmfd.)	30-1032
(52)	Cone & Voice Coil	36-3159
	Complete Speaker (A50)	36-1371
(53)	Field Coil Assembly	36-3513
(54)	Resistor (1,500 ohms)	33-215344
(55)	Condenser (.1 mfd.)	30-4499
(56)	"B" Choke	32-2812
(57)	Condenser (250 mmfd.)	30-1032
(58)	On & Off Switch	42-1368
(59)	Pilot Lamp	34-2039
(60)	Condenser (250 mmfd.)	30-1032
(61)	Condenser (.5 mfd.)	30-4474
(62)	"A" Choke	32-1644
(63)	Filament Choke	32-2729
(64)	Condenser (250 mmfd.)	30-1032
(65)	Vibrator Choke	32-2812
(66)	Condenser (.5 mfd.)	30-4474
(67)	Vibrator	41-3170-3
(68)	Resistor (200 ohms)	33-120344
(69)	Power Transformer	32-7911
(70)	Condenser (7,500 mmfd.)	30-4420
(71)	"B" Filter Choke	32-7910
(72)	Filter Condenser (4-4 mfd.)	30-2257
(73)	Condenser (250 mmfd.)	30-1032
	Receiver Housing	38-2056
	Pilot Lamp Assembly	38-8467
	Tuning Shaft	28-8779
	Volume Shaft	28-8780
	Tone Shaft	28-8781
	Local Distance Shaft	28-8782
	Accessory Speaker Socket	38-8803
	Speaker Socket	27-6030

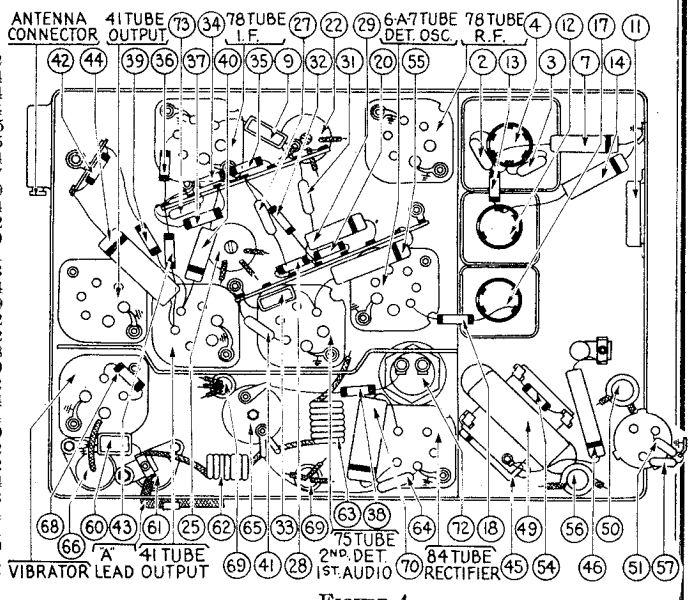

FIGURE 4

Description	Part No.
Four Prong Socket	27-6044
Five Prong Socket	27-6035
Six Prong Socket	27-6036
Seven Prong Socket	27-6037
Interference Condenser	30-4007
Interference Condenser	30-4475
Distributor Resistor	4851

No.	Description	Part No.
	Fuse	7227
	Fuse Insulator	27-7727
	Stud (Speaker Mtg.)	28-6088
	Nut (Speaker Mtg.)	W-55A
	Tee Bolt (Rec. Mtg.)	28-6268
	Nut (Rec. Mtg.)	W-518A
	Switch & Lead Assembly	41-3217

©John F. Rider, Publisher

PHILCO RADIO & TELEV. CORP.

MODEL P1535(Packard)
Schematic,Parts
Chassis Layout

PACKARD — PHILCO MODEL P-1535, TWO UNIT RECEIVER

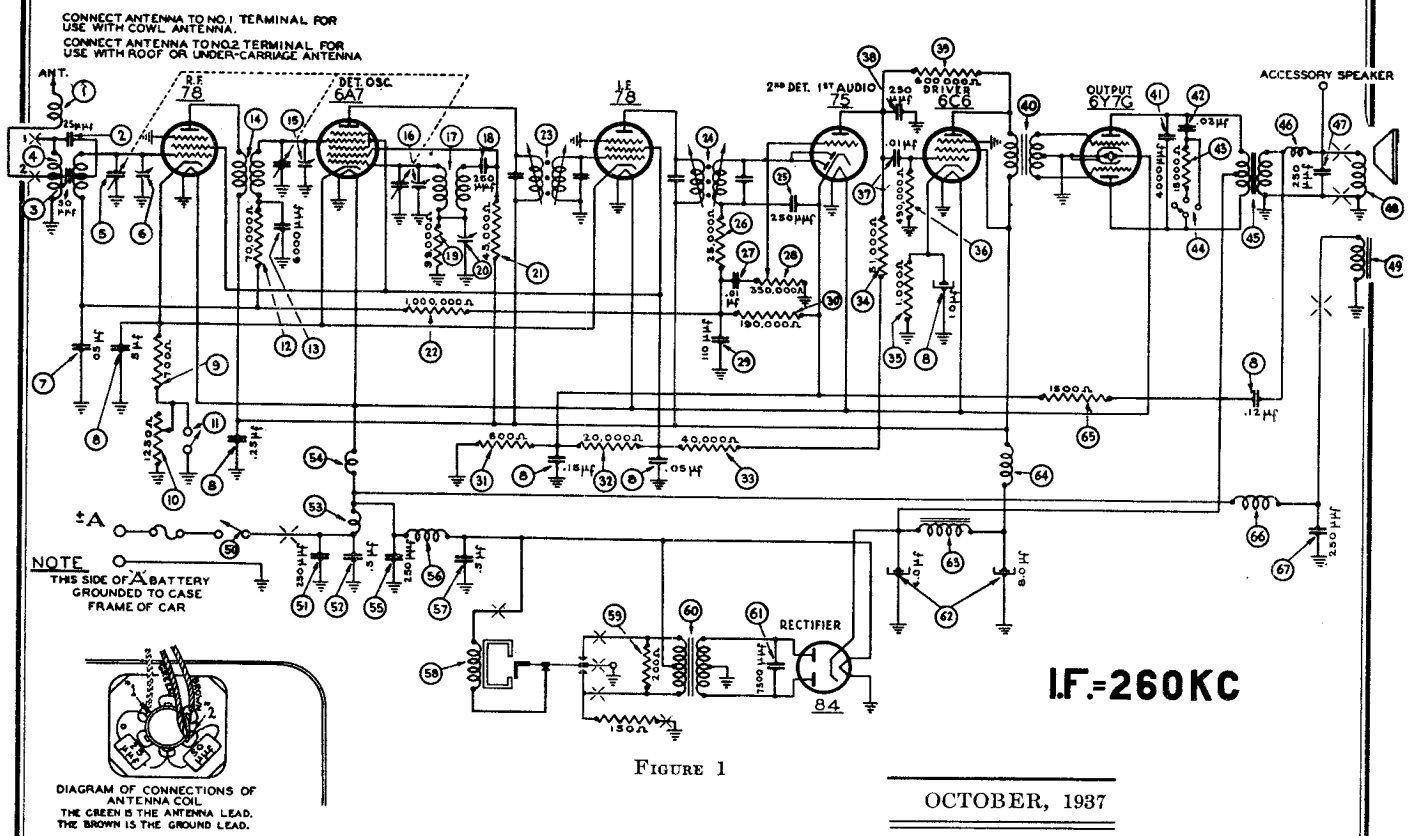

FIGURE 1

OCTOBER, 1937

PARTS LIST — MODEL P-1535

No.	Description	Part No.
①	Antenna Choke	32-2063
②	Condenser (25 mmfd.)	30-1067
③	Condenser (50 mmfd.)	30-1029
④	Antenna Transformer	32-2833
⑤	Tuning Condenser	31-2111
⑥	First Padder (on Tun. Cond.)	
⑦	Condenser (.05 mfd.)	30-4444
⑧	Condenser (.05-.12-.15-.25-.5-10 mfd.)	30-4545
⑨	Resistor (700 ohms)	33-1220
⑩	Sensitivity Control (1,250 ohms)	33-5248
⑪	Sensitivity Control Switch	42-1378
⑫	Resistor (70,000 ohms)	33-370344
⑬	Condenser (6,000 mmfd.)	30-4467
⑭	R. F. Transformer	32-2830
⑮	Second Padder (on Tun. Cond.)	
⑯	Third Padder (on Tun. Cond.)	
⑰	Oscillator Transformer	32-2829
⑱	Condenser (250 mmfd.)	30-1032
⑲	Resistor (99,000 ohms)	33-399344
⑳	Low Frequency Padder	31-6230
㉑	Resistor (45,000 ohms)	33-345344
㉒	Resistor (1,000,000 ohms)	33-510344
㉓	First I. F. Transformer	32-2554
㉔	Second I. F. Transformer	32-2556
㉕	Condenser (250 mmfd.)	30-1032
㉖	Resistor (25,000 ohms)	33-325344
㉗	Condenser (.01 mfd.)	30-4479
㉘	Volume Control (350,000 ohms)	33-5246
㉙	Condenser (110 mmfd.)	30-1031
㉚	Resistor (190,000 ohms)	33-419344
㉛	Resistor (600 ohms)	33-1212
㉜	Resistor (20,000 ohms)	33-320344
㉝	Resistor (40,000 ohms)	33-340444
㉞	Resistor (51,000 ohms)	33-351344
㉟	Resistor (1,000 ohms)	33-210344
㊱	Resistor (490,000 ohms)	33-449344
㊲	Condenser (.01 mfd.)	30-4501
㊳	Condenser (250 mmfd.)	30-1032
㊴	Resistor (600,000 ohms)	33-459334
㊵	Input Transformer	32-7779
㊶	Condenser (4,000 mmfd.)	30-4185
㊷	Condenser (.03 mfd.)	30-4447
㊸	Resistor (15,000 ohms)	33-315344
㊹	Tone Control Switch	42-1377
㊺	Output Transformer	32-7778
㊻	Choke	32-1374
㊼	Condenser (250 mmfd.)	30-1032
㊽	Cone & Voice Coil	36-3159
	Complete Speaker (A49)	36-1370
㊾	Field Coil Assembly	36-3513
㊿	On-Off Switch	42-1374
(51)	Condenser (250 mmfd.)	30-1032
(52)	Condenser (.5 mfd.)	30-4474
(53)	"A" Choke	32-1374
(54)	Filament Choke	32-1604
(55)	Condenser (250 mmfd.)	30-1032
(56)	Vibrator Choke	32-2537
(57)	Condenser (.5 mfd.)	30-4474
(58)	Vibrator	41-3170-3
(59)	Resistor (200 ohms)	33-120344
(60)	Power Transformer	32-7720
(61)	Condenser (7,500 mmfd.)	30-4420
(62)	Filter Condenser (4-8 mfd.)	30-2167
(63)	Filter Choke	32-7811
(64)	"B" Choke	32-1281
(65)	Resistor (1,500 ohms)	33-215344
(66)	Choke	32-2657
(67)	Condenser (250 mmfd.)	30-1032
	Receiver Housing	38-2050
	Tuning Shaft	28-8762
	Volume Shaft	28-8763
	Tone Shaft	28-8764
	Local Distance Shaft	28-8765
	Tuning and Volume Knob	27-4687
	Switch Knobs	28-7255
	Accessory Speaker Socket	38-8803
	Speaker Socket	27-6030
	Four Prong Socket	27-6044
	Five Prong Socket	27-6035
	Six Prong Socket	27-6036
	Seven Prong Socket	27-6037

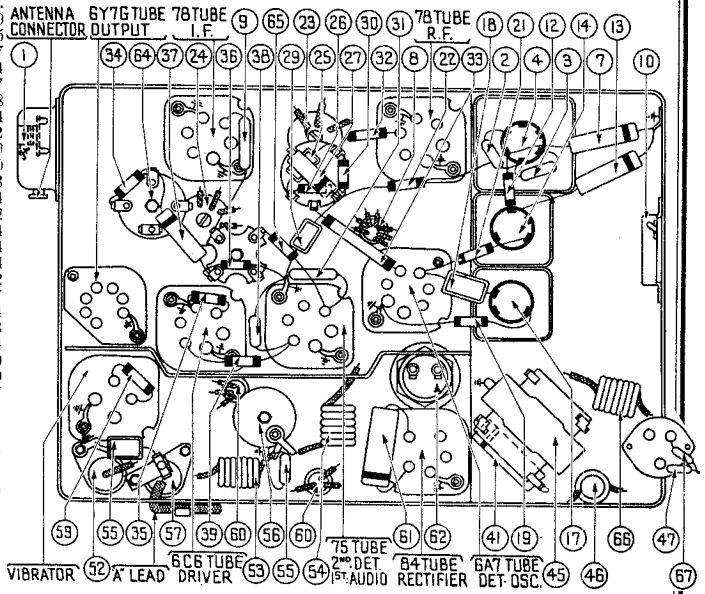

FIGURE 2

Description	Part No.
Eight Prong Socket	27-6058
Interference Condenser	30-4007
Interference Condenser	30-4475
Inductive Suppressor	32-2250
Fuse	7227
Fuse Insulator	27-7729
Tee Bolt (Rec. Mtg.)	28-6268
Nut (Rec. Mtg.)	W-518
Mtg. Bracket and Stud (Speaker Mtg.)	28-1546
Nut (Speaker Mtg.)	W-55
Switch & Lead Assembly	41-3217

©John F. Rider, Publisher

MODEL P1535(Packard) Socket,Trimmers Alignment

PHILCO RADIO & TELEV. CORP.

MODEL L1560(Lincoln) Control Details,Parts

I. F. TRANSFORMERS AND PADDERS

The I. F. transformers are assembled complete with padding condensers.

Both the primary and the secondary padders are placed side by side in the top of the transformer shield can. The adjusting screws are accessible thru the holes in the top of the shield. (See Figure 4).

The coil windings terminate in leads instead of terminals or lugs. The color scheme of the leads is given in Figure 3.

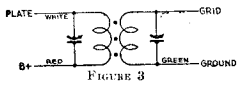

FIGURE 3

If replacements are ever necessary, replace the entire coil assembly, 32-2554 for the first I. F. stage and 32-2556 for the second I. F. stage. Neither the coil nor the padders will be furnished separately. Order only by the above numbers.

MODEL P-1535 ADJUSTMENTS

All padding adjustments are carefully made at the factory and ordinarily no readjustments are necessary. However, when readjustments are required, the procedure given below must be followed in detail.

Equipment

Fully charged heavy duty storage battery or 6-volt power pack, 048A or 099 Philco Set Tester, 3164 Padding wrench, 27-7159 Padding screw driver.

General

OUTPUT METER — The output meter must be connected by means of an adapter to the plate of the type 6Y7G output tube and to the Receiver chassis.

SIGNAL GENERATOR — With the Receiver and signal generator set up for operation at the prescribed frequency, turn the Receiver volume control on full and set the signal generator attenuator so that a half scale reading is obtained on the output meter. The signal in the speaker should be audible but not loud.

The shielding on the signal generator output lead must be connected to the Receiver housing.

The sensitivity switch must be in the distant position.

Procedure

I. F. — Set the signal generator at exactly 260 K. C.

Connect the generator lead to the grid cap of the 6A7 tube in series with a .1 mfd. condenser (without removing the grid cap). Adjust the primary and secondary screw padders on the first and second I. F. transformer for maximum reading on the output meter. (See Figure 4 for location of padders)

HIGH FREQUENCY AND R. F. — After padding the I. F. stages remove the generator lead from the 6A7 tube.

Set the signal generator at 1500 K. C. and then connect the generator lead to the grid cap of the 78 R. F. tube in series with a .1 mfd. condenser (without removing the grid cap).

Place a piece of paper approximately .006" thick as a gauge between the heel of the rotor plates and the stator plates on the oscillator section of the tuning condenser. Turn the rotor plates in mesh until they strike against the paper.

With the tuning condenser in this position, adjust the high frequency padder (19) and the R. F. padder (18) until the maximum reading is obtained on the output meter. This is the true setting for 1500 K. C., 150 on the dial scale.

LOW FREQUENCY — Turn the tuning condenser plates in mesh to approximately 580 K. C., 58 on the dial scale and set the signal generator at 580 K. C. Roll the tuning condenser and adjust the low frequency padder screw (24) for maximum reading on the output meter.

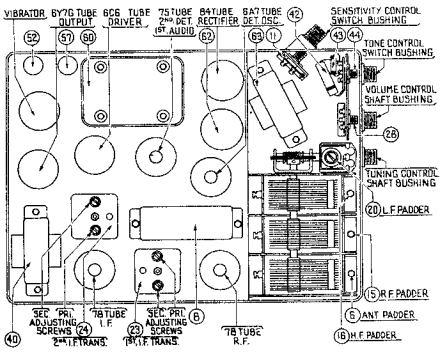

FIGURE 4

HIGH FREQUENCY READJUSTMENT — Turn the tuning condenser plates out of mesh to 1500 K. C. and set the signal generator at 1500 K. C. Then adjust the high frequency padder (19) again for maximum reading on the output meter.

Remove the generator lead from the 78 R. F. tube.

ANTENNA — WHEN PADDING THE ANTENNA STAGE IT IS EXTREMELY IMPORTANT THAT THE PROPER DUMMY ANTENNA BE USED.

Connect the signal generator lead to the antenna socket on the Receiver using a 250 mmfd. condenser in series with an antenna lead, Part No. 41-3191.

Turn the tuning condenser to 1400 K. C. and set the generator at 1400 K. C. Adjust the padders (15) and (5) for the maximum reading on the output meter.

When the antenna stage adjustment is made with the Receiver installed in the car, the Receiver antenna lead must be connected to the car antenna in the usual manner. Connect the signal generator output lead to a wire placed near the car antenna but not connected to it.

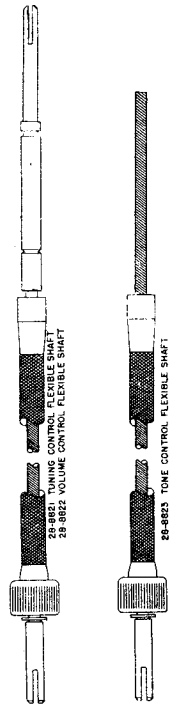

LINCOLN CONTROL — MODEL L-1560

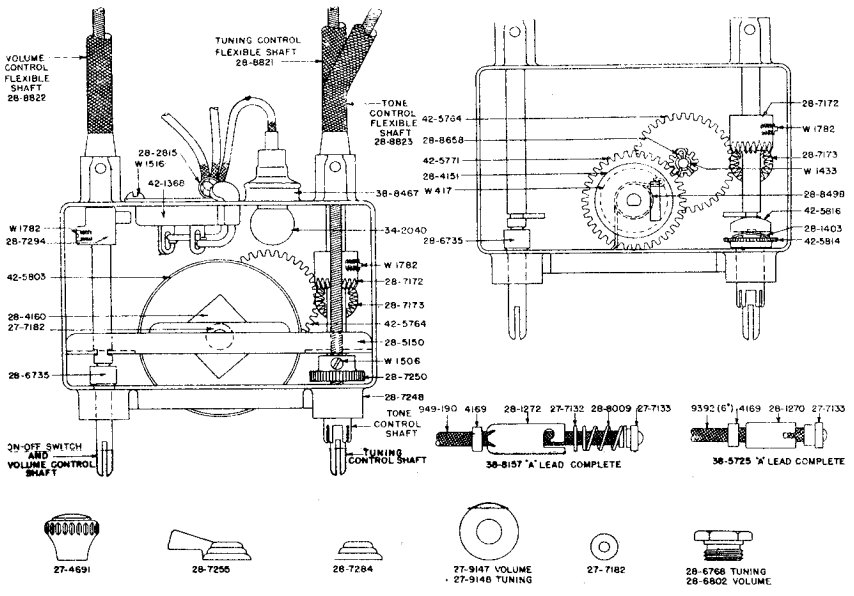

PARTS LIST AND PRICES
(Prices Subject to Change Without Notice)

PART NUMBER	DESCRIPTION	LIST PRICE
W-417	Washer	per 100 $ .50
W-1433	Washer	per 100 .50
W-1506	Set Screw	per 100 1.00
W-1516	Set Screw	per 100 1.30
W-1782	Set Screw	per 100 2.50
41-3191	Antenna Lead	per 100 1.75
27-7132	Washer	per 100 .40
27-7133	Ferrule	.01
28-2815	Retaining Washer	per 100 .50
27-7182	Sleeve	* * *
27-9147	Felt Washer	* * *
27-9148	Felt Washer	.01
28-1272	Housing	per 100 .85
28-1403	Housing	per 100 1.25
28-2815	Spring	.01
28-4151	Clamp	.01
28-4160	Friction Washer	.02
28-4161	Friction Washer	.01
28-5149	Cover	.10
28-5150	Plate	.05
28-5764	Bushing	.01
28-6768	Gland Nut (Tuning)	.20
28-6802	Gland Nut (Volume)	.20

PART NUMBER	DESCRIPTION	LIST PRICE
28-7172	Miter Gear	.10
28-7173	Miter Pinion Gear	.10
28-7248	Control Housing	*
28-7250	Gear (Control Knob)	.10
28-7255	Tone Control Knob	.35
28-7284	Knob Base	.30
28-7294	Switch Lever	.15
28-8000	Spring	.50
28-8498	Anti-Back Lash Spring	per 100
28-8654	Spring	.10
28-8821	Tuning Shaft	.05
28-8822	Volume Shaft	.80
28-8823	Tone Shaft	.90
28-8825	Drive Shaft	.80
28-8826	Pilot Lamp Lead	.60
34-5727	"A" Lead	*
38-8157	"A" Lead	.15
38-8467	Pilot Lamp Assembly	.30
38-8654	Shaft Support	.15
42-5764	Intermediate Gear	.20
42-5771	Drum Shaft & Gear	.15
42-5803	Scale Assembly	.45
42-5806	Guide & Sleeve	.15
42-5814	Retainer	.25

* Prices not available at this time.

©John F. Rider, Publisher

PHILCO RADIO & TELEV. CORP.

MODEL F1540(Ford)
Schematic, Parts
Chassis Layout

FORD - PHILCO MODEL — F-1540 SINGLE UNIT RECEIVER

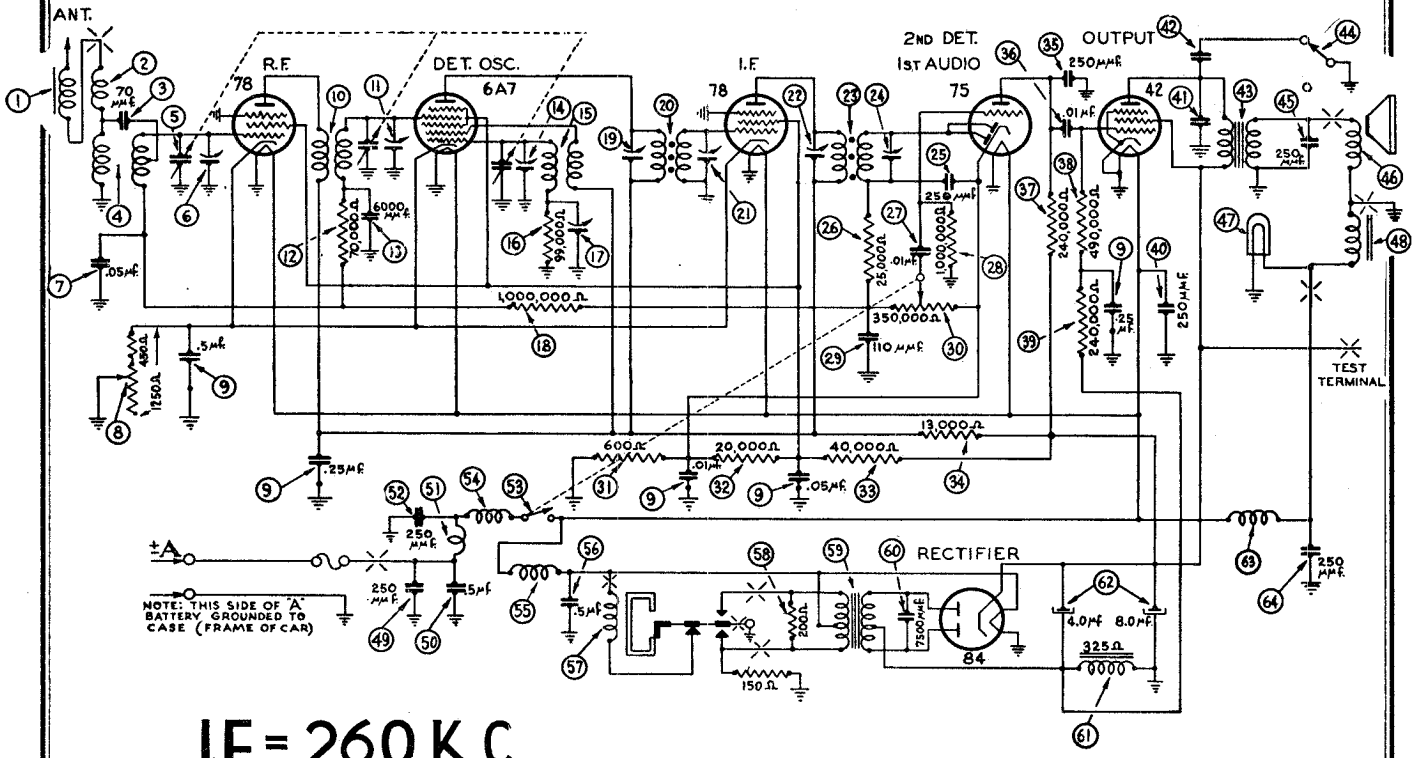

I.F. = 260 K.C.

FOR ALIGNMENT
SEE INDEX

DECEMBER 15, 1937

MODEL F-1540 PARTS LIST

No.	Description	Part No.
(1)	Antenna Lead	41-3386
(2)	Antenna Choke	32-1372
(3)	Condenser (70 mmfd.)	30-1105
(4)	Antenna Transformer	32-2912
(5)	Tuning Condenser	31-2181
(6)	First Padder (on Tun. Cond.)	
(7)	Condenser (.05 mfd.)	30-4444
(8)	Sensitivity Control	33-5239
(9)	Condenser (.01-.05-.25-.25-.5 mfd.)	30-4561
(10)	R. F. Transformer	32-2830
(11)	Second Padder (on Tun. Cond.)	
(12)	Resistor (70,000 ohms)	33-370344
(13)	Condenser (6,000 mmfd.)	30-4467
(14)	Third Padder (on Tun. Cond.)	
(15)	Oscillator Transformer	32-2828
(16)	Resistor (99,000 ohms)	33-399344
(17)	Low Frequency Padder	31-6230
(18)	Resistor (1,000,000 ohms)	33-510344
(19)	Padder (Pri. 1st I. F. Trans.)	
(20)	First I. F. Transformer	32-2286
(21)	Padder (Sec. 1st I. F. Trans.)	
(22)	Padder (Pri. 2nd I. F. Trans.)	
(23)	Second I. F. Transformer	32-2908
(24)	Padder (Sec. 2nd I. F. Trans.)	
(25)	Condenser (250 mmfd.)	30-1032
(26)	Resistor (25,000 ohms)	33-325344
(27)	Condenser (.01 mfd.)	30-4479
(28)	Resistor (1,000,000 ohms)	33-510344
(29)	Condenser (110 mmfd.)	30-1031
(30)	Volume Control (350,000 ohms)	33-5260
(31)	Resistor (600 ohms)	33-160331
(32)	Resistor (20,000 ohms)	33-320344
(33)	Resistor (40,000 ohms)	33-340444
(34)	Resistor (13,000 ohms)	33-313344
(35)	Condenser (250 mmfd.)	30-1032
(36)	Condenser (.01 mfd.)	30-4501

No.	Description	Part No.
(37)	Resistor (240,000 ohms)	33-424344
(38)	Resistor (490,000 ohms)	33-449344
(39)	Resistor (240,000 ohms)	33-424344
(40)	Condenser (250 mmfd.)	30-1032
(41)	Condenser (.02 mfd.)	30-4495
(42)	Condenser (.02 mfd.)	30-4495
(43)	Output Transformer	32-7946
(44)	Tone Control Switch	42-1406
(45)	Condenser (250 mmfd.)	30-1032
(46)	Cone & Voice Coil	45-2608
(47)	Pilot Lamp	34-2039
(48)	Field Coil Assembly	32-9263
(49)	Condenser (250 mmfd.)	30-1032
(50)	Condenser (.5 mfd.)	30-4474
(51)	"A" Choke	32-1374
(52)	Condenser (250 mmfd.)	30-1032
(53)	On-Off Switch	33-5260
(54)	Filament Choke	32-1644
(55)	Vibrator Choke	32-2911
(56)	Condenser (.5 mfd.)	30-4474
(57)	Vibrator	41-3170-3
(58)	Resistor (200 ohms)	33-120344
(59)	Power Transformer	32-7944
(60)	Condenser (7,500 mmfd.)	30-4420
(61)	"B" Filter Choke	32-7943
(62)	Filter Condenser (4-8 mfd.)	30-2295
(63)	Choke	32-1561
(64)	Condenser (250 mmfd.)	30-1032
	Four Prong Socket	27-6044
	Five Prong Socket	27-6035
	Six Prong Socket	27-6036
	Seven Prong Socket	27-6037
	Speaker Socket	27-6030
	Receiver Housing	38-9384
	Tuning & Volume Knob	27-4697
	Dial Assembly	42-5826
	Tuning Shaft	28-6795
	Volume Shaft	28-8837

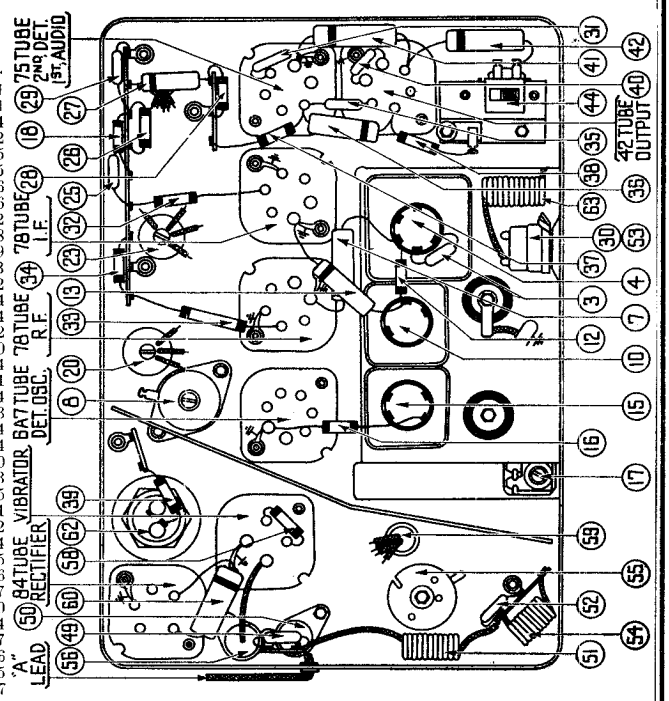

FIGURE 2

©John F. Rider, Publisher

MODEL F1540(Ford)
Control Details
Antenna

PHILCO RADIO & TELEV. CORP.

MAY 15, 1938

1938 FORD CLOSED CAR AERIAL

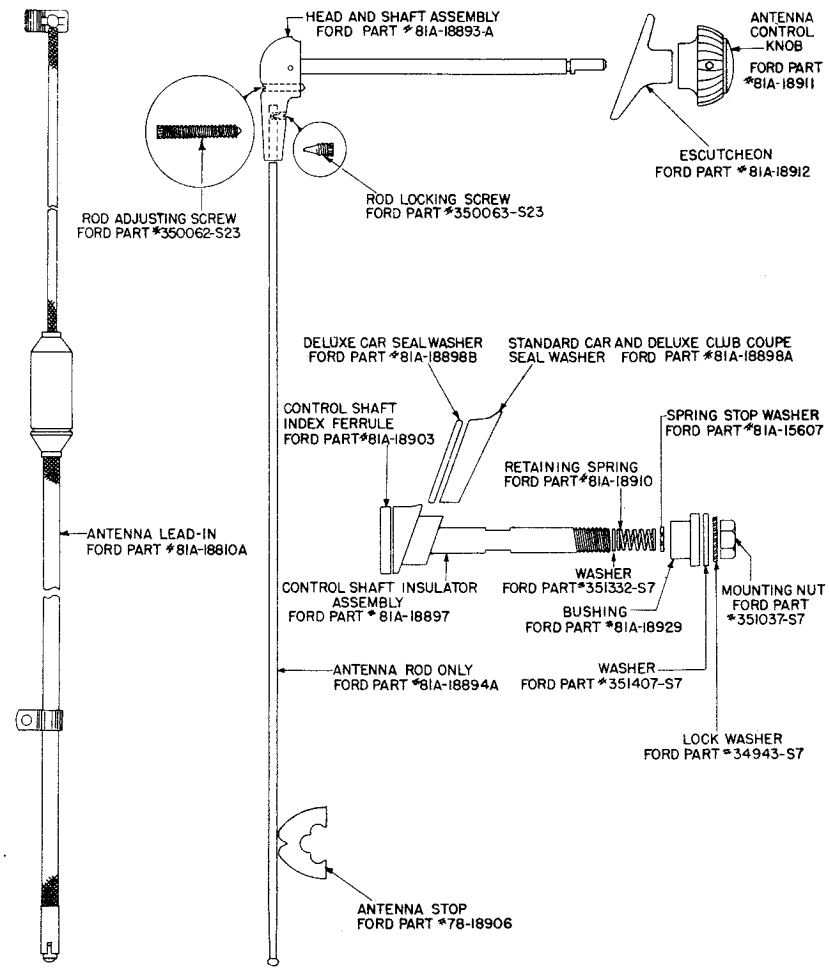

THESE PARTS CAN BE SECURED FROM FORD DEALERS ONLY.

Ford Part No.	Description
34943-S7	Lockwasher
350062-S23	Adjusting Screw
350063-S23	Rod Locking Screw
351037-S7	Nut
351332-S7	Washer
351407-S7	Washer

Ford Part No.	Description
78-18906	Antenna Stop
81A-15607	Spring Stop Washer
81A-18810A	Antenna Lead-in
81A-18893A	Head & Shaft Assembly
81A-18894A	Antenna Rod
81A-18897	Control Shaft Insulator Assembly

Ford Part No.	Description
81A-18898A	Standard Car & DeLuxe Club Coupe Seal Washer
81A-18898B	DeLuxe Car Seal Washer
81A-18903	Control Shaft Index Ferrule
81A-18910	Retaining Spring
81A-18911	Antenna Control Knob
81A-18912	Escutcheon
81A-18929	Bushing

MAY 10, 1938

FORD CONTROL — MODEL F-1540

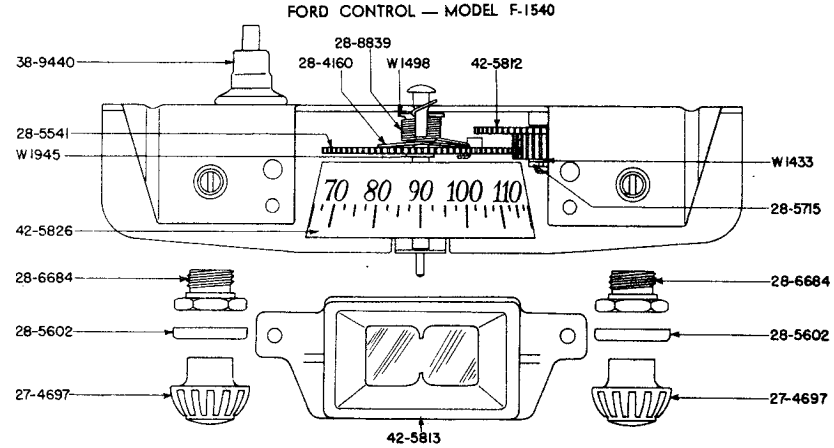

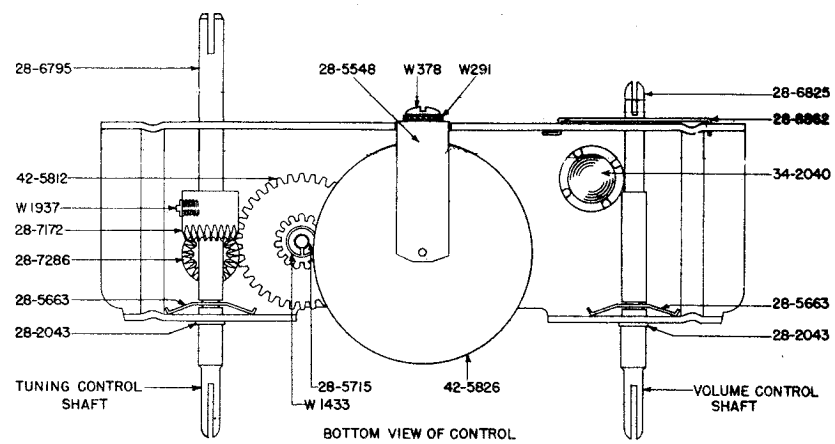

BOTTOM VIEW OF CONTROL

PARTS LIST AND PRICES (Prices Subject to Change Without Notice)

PART NUMBER	DESCRIPTION	LIST PRICE
W-291	Lockwasher ..... per 100	$ .40
W-378	Screw ..... per 100	.20
W-1433	Washer ..... per 100	.15
W-1498	Eyelet ..... per 100	.50
W-1937	Set Screw	*
W-1945	Lockwasher	*
27-4697	Tuning & Volume Knob	.10
28-2043	Washer ..... per 100	.25
28-4160	Friction Spring	.01
28-5541	Dial Gear	*
28-5548	Shaft Bearing	*
28-5602	Knob Base	.10
28-5663	Spring Washer	*

PART NUMBER	DESCRIPTION	LIST PRICE
28-5715	Washer	*
28-6684	Gland Nut	.10
28-6795	Tuning Shaft	.20
28-6825	Volume Shaft	.35
28-7172	Miter Drive Gear	.10
28-7286	Miter Idler Gear	*
28-8839	Anti-back Lash Spring	.05
28-8862	Centering Spring	*
34-2040	Pilot Lamp	.09
38-9440	Pilot Lamp Assembly	*
42-5812	Intermediate Gear Assembly	*
†42-5813	Bezel Assembly	.30
42-5826	Dial and Shaft Assembly	.50

* Prices not available at this time.
† This part available from Ford Dealers only.

©John F. Rider, Publisher

PHILCO RADIO & TELEV. CORP.

MODEL L1560
(Lincoln Zephyr)
Schematic, Parts
Chassis Layout

LINCOLN ZEPHYR - PHILCO MODEL — L-1560 TWO UNIT RECEIVER

DECEMBER 16, 1937

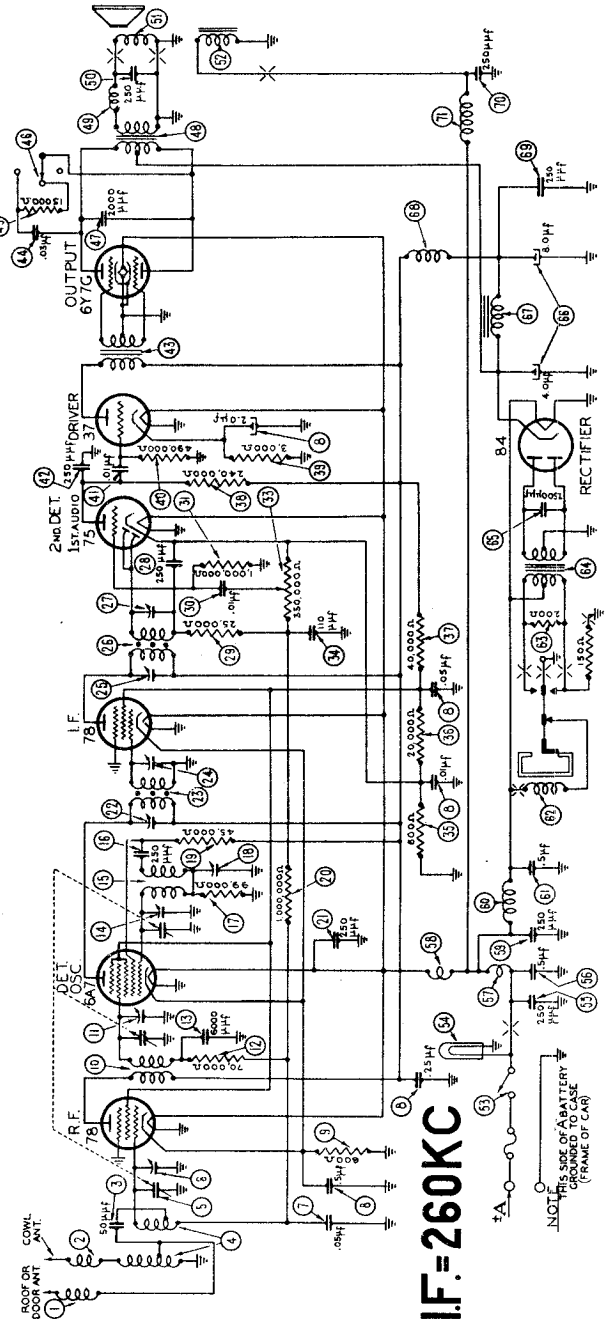

FIGURE 1

MODEL L-1560 PARTS LIST

No.	Description	Part No.
①	Antenna Choke	38-8106
②	Antenna Choke	38-8106
③	Condenser (50 mmfd.)	30-1029
④	Antenna Transformer	32-2914
⑤	Tuning Condenser	31-2161
⑥	First Padder (on Tun. Cond.)	
⑦	Condenser (.05 mfd.)	30-4444
⑧	Condenser (.01-.05-.25-.5-2 mfd.)	30-4493
⑨	Resistor (600 ohms)	33-1212
⑩	R. F. Transformer	32-2830
⑪	Second Padder (on Tun. Cond.)	
⑫	Resistor (70,000 ohms)	33-370344
⑬	Condenser (6,000 mmfd.)	30-4467
⑭	Third Padder (on Tun. Cond.)	
⑮	Oscillator Transformer	32-2829
⑯	Condenser (250 mmfd.)	30-1032
⑰	Resistor (99,000 ohms)	33-399344
⑱	Low Frequency Padder	31-6230
⑲	Resistor (45,000 ohms)	33-345344
⑳	Resistor (1,000,000 ohms)	33-510344
㉑	Condenser (250 mmfd.)	30-1032
㉒	Padder (Pri. 1st I. F. Trans.)	
㉓	First I. F. Transformer	32-2791
㉔	Padder (Sec. 1st I. F. Trans.)	
㉕	Padder (Pri. 2nd I. F. Trans.)	
㉖	Second I. F. Transformer	32-2793
㉗	Padder (Sec. 2nd I. F. Trans.)	
㉘	Condenser (250 mmfd.)	30-1032
㉙	Resistor (25,000 ohms)	33-325344
㉚	Condenser (.01 mfd.)	30-4479
㉛	Resistor (1,000,000 ohms)	33-510344
㉜	Volume Control (350,000 ohms)	33-5246
㉝	Condenser (110 mmfd.)	30-1031
㉞	Resistor (600 ohms)	33-160331
㉟	Resistor (20,000 ohms)	33-320344
㊱	Resistor (40,000 ohms)	33-340444
㊲	Resistor (240,000 ohms)	33-424344
㊳	Resistor (3,000 ohms)	33-230344
㊴	Resistor (490,000 ohms)	33-449344
㊵	Condenser (.01 mfd.)	30-4145
㊶	Condenser (250 mmfd.)	30-1032
㊷	Input Transformer	32-7779
㊸	Condenser (.03 mfd.)	30-4447
㊹	Resistor (15,000 ohms)	33-315344
㊺	Tone Control Switch	42-1377
㊻	Condenser (2,000 mmfd.)	30-4177
㊼	Output Transformer	32-7778
㊽	Choke	32-1374
㊾	Condenser (250 mmfd.)	30-1032
㊿	Cone & Voice Coil	36-3159
(51)	Field Coil Assembly	36-3513
(52)	On & Off Switch	42-1369
(53)	Pilot Lamp	34-2039
(54)	Condenser (250 mmfd.)	30-1032
(55)	Condenser (.5 mfd.)	30-4474
(56)	"A" Choke	32-1374
(57)	Filament Choke	32-2729
(58)	Condenser (250 mmfd.)	30-1032
(59)	Vibrator Choke	32-2537
(60)	Condenser (.5 mfd.)	30-4474
(61)	Vibrator	41-3170-3
(62)	Resistor (200 ohms)	33-120344
(63)	Power Transformer	32-7720
(64)	Condenser (7,500 mmfd.)	30-4420
(65)	Filter Condenser (4-8 mfd.)	30-2167
(66)	Filter Choke	32-7811
(67)	"B" Choke	32-1281
(68)	Condenser (250 mmfd.)	30-1032
(69)	Condenser (250 mmfd.)	30-1032
(70)	Choke	32-2657
(71)	Receiver Housing	38-9340
	Four Prong Socket	27-6044
	Five Prong Socket	27-6035
	Six Prong Socket	27-6036
	Seven Prong Socket	27-6037
	Seven Prong Socket Octal Base	27-6087
	Fuse	7227
	Fuse Insulator	27-7729
	Tuning Shaft	28-8821
	Volume Shaft	28-8822
	Tone Shaft	28-8823
	Scale Assembly	42-5803
	Tuning & Volume Knob	27-4691
	Knob Base	28-7284
	Switch Lever	28-7255

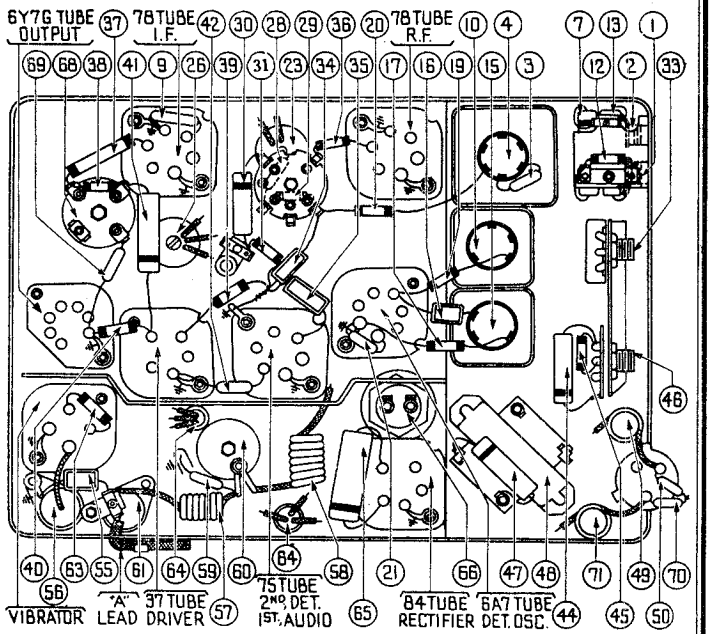

FIGURE 2

©John F. Rider, Publisher

I. F. TRANSFORMERS AND PADDERS

The I. F. transformers are assembled complete with padding condensers.

Both the primary and secondary padders are placed side by side in the top of the transformer shield can. The adjusting screws are accessible thru the holes in the top of the shield. (See Figure 4).

The coil windings terminate in leads instead of terminals or lugs. The color scheme of the leads is given in Figure 3.

FIGURE 3

If replacements are ever necessary, replace the entire coil assembly, 32-2286 for the first I. F. stage and 32-2908 for the second I. F. stage. Neither the coil nor the padders will be furnished separately. Order only by the above numbers.

ADJUSTMENTS

All padding adjustments are carefully made at the factory and ordinarily no readjustments are necessary. However, when readjustments are required, the procedure given below must be followed in detail.

Equipment

Fully charged heavy duty storage battery or 6-volt power pack, 048A or 099 Philco Set Tester, 3164 Padding wrench, 27-7159 Padding screw driver.

General

OUTPUT METER — The output meter must be connected by means of an adapter to the plate of the type 42 output tube and to the Receiver chassis.

SIGNAL GENERATOR — With the Receiver and signal generator set up for operation at the prescribed frequency, turn the Receiver volume control on full and set the signal generator attenuator so that a half scale reading is obtained on the output meter. The signal in the speaker should be audible but not loud.

The shielding on the signal generator output lead must be connected to the Receiver housing.

Procedure

Adjust the sensitivity control until the resistance between the lug on the control and the Receiver chassis is 850 ohms.

I. F. — Set the signal generator at exactly 260 K. C.

Connect the generator lead to the grid cap of the 6A7 tube in series with a .1 mfd. condenser (without removing the grid clip). Adjust the padders (19), (21), (22) and (24) on the first and second I. F. transformers for maximum reading on the output meter. (See Figure 4 for location of padders).

HIGH FREQUENCY AND R. F. — After padding the I. F. stages, remove the generator lead from the 6A7 tube.

Set the signal generator at 1500 K. C. and then connect the generator lead to the grid cap of the 78 R. F. tube in series with a .1 mfd. condenser (without removing the grid clip).

Place a piece of paper approximately .006" thick as a gauge between the heel of the rotor plates and the stator plates on the oscillator section of the tuning condenser. Turn the rotor plates in mesh until they strike against the paper.

With the tuning condenser in this position, adjust the high frequency padder (14) and the R. F. padder (11) until the maximum reading is obtained on the output meter. This is the true setting for 1500 K. C., 150 on the dial scale.

LOW FREQUENCY — Turn the tuning condenser plates in mesh to approximately 580 K. C., 58 on the dial scale and set the signal generator at 580 K. C. Roll the tuning condenser and adjust the low frequency padder screw (17) for maximum reading on the output meter.

HIGH FREQUENCY READJUSTMENT — Turn the tuning condenser plates out of mesh to 1500 K. C. and set the signal generator at 1500 K. C. Then adjust the high frequency padder (14) again for maximum reading on the output meter.

Remove the generator lead from the 78 R. F. tube.

ANTENNA — WHEN PADDING THE ANTENNA STAGE IT IS EXTREMELY IMPORTANT THAT THE PROPER DUMMY ANTENNA BE CONSTRUCTED AND USED.

Connect the signal generator lead to the antenna connector on the Receiver as shown in Figure 5.

Turn the tuning condenser to 1400 K. C. and set the generator at 1400 K. C. Adjust the padders (11) and (6) for the maximum reading on the output meter.

When the antenna stage adjustment is made with the Receiver installed in the car, the Receiver antenna lead must be connected to the car antenna in the usual manner. Connect the signal generator output lead to a wire placed near the car antenna but not connected to it.

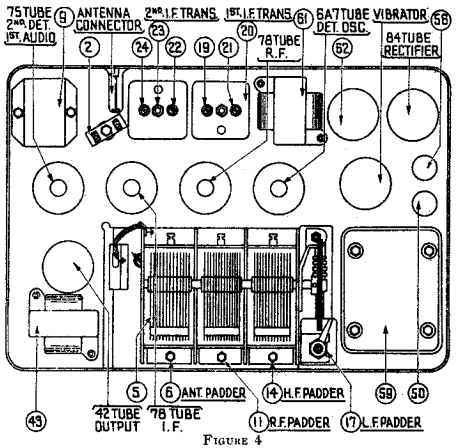

FIGURE 4

FIGURE 5

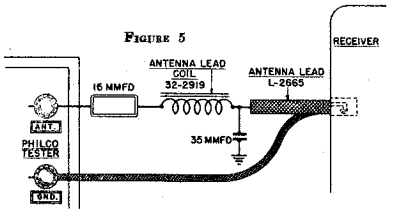

Procedure

I. F. — Set the signal generator at exactly 260 K. C.

Connect the generator lead to the grid cap of the 6A7 tube in series with a .1 mfd. condenser (without removing the grid clip). Adjust the padders (23), (24), (25) and (27) on the first and second I. F. transformers for maximum reading on the output meter. (See Figure 4 for location of padders).

HIGH FREQUENCY AND R. F. — After padding the I. F. stages, remove the generator lead from the 6A7 tube.

Set the signal generator at 1500 K. C. and then connect the generator lead to the grid cap of the 78 R. F. tube in series with a .1 mfd. condenser (without removing the grid clip).

Place a piece of paper approximately .006" thick as a gauge between the heel of the rotor plates and the stator plates on the oscillator section of the tuning condenser. Turn the rotor plates in mesh until they strike against the paper.

When the COWL ANTENNA is used, connect the signal generator lead to the cowl antenna connector on the Receiver, using an antenna lead, Part No. L-2665, and a 40 mmfd. condenser in series between the two leads.

When the ROOF or DOOR ANTENNA is used, connect the signal generator lead to the antenna connector on the Receiver, using an antenna lead, Part No. L-2665, and a 725 mmfd. condenser in series between the two leads.

Turn the tuning condenser to 1400 K. C. and set the generator at 1400 K. C. Adjust the padders (11) and (6) for the maximum reading on the output meter.

When the antenna stage adjustment is made with the Receiver installed in the car, the Receiver antenna lead must be connected to the car antenna in the usual manner. Connect the signal generator output lead to a wire placed near the car antenna but not connected to it.

With the tuning condenser in this position, adjust the high frequency padder (14) and the R. F. padder (11) until the maximum reading is obtained on the output meter. This is the true setting for 1500 K. C., 150 on the dial scale.

LOW FREQUENCY — Turn the tuning condenser plates in mesh to approximately 580 K. C., 58 on the dial scale and set the signal generator at 580 K. C. Roll the tuning condenser and adjust the low frequency padder screw (18) for maximum reading on the output meter.

HIGH FREQUENCY READJUSTMENT — Turn the tuning condenser plates out of mesh to 1500 K. C. and set the signal generator at 1500 K. C. Then adjust the high frequency padder (14) again for maximum reading on the output meter.

Remove the generator lead from the 78 R. F. tube.

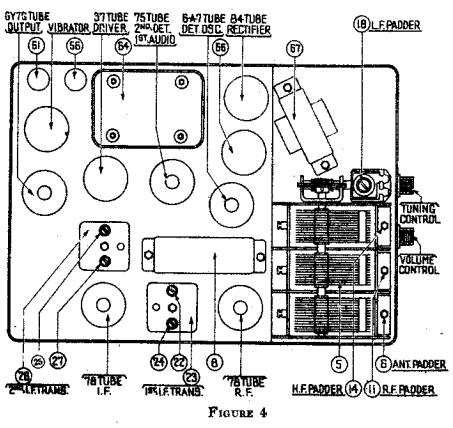

FIGURE 4

ANTENNA — WHEN PADDING THE ANTENNA STAGE IT IS EXTREMELY IMPORTANT THAT THE PROPER DUMMY ANTENNA BE CONSTRUCTED AND USED.

©John F. Rider, Publisher

MODEL C1550(Chrysler
Schematic, Parts
Chassis Layout

PHILCO RADIO & TELEV. CORP

CHRYSLER - PHILCO MODEL C - 1550

THE MODEL C-1550 HAS BEEN DESIGNED FOR INSTALLATION IN THE CHRYSLER CORPORATION BUILT CARS FOR USE WITH A CHRYSLER "ROADWAY DUAL" OR A "SKYWAY" ANTENNA

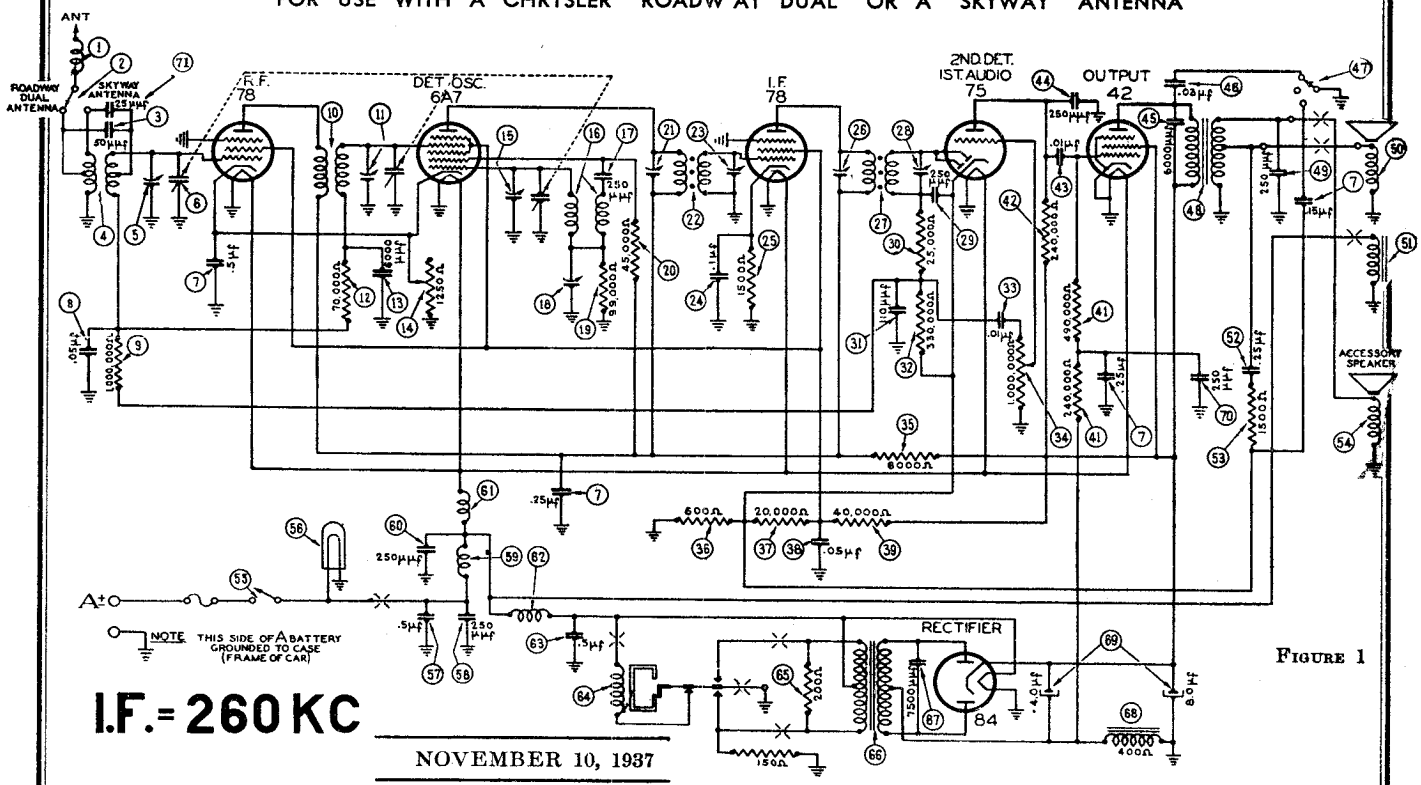

FIGURE 1

I.F. = 260 KC

NOVEMBER 10, 1937

MODEL C - 1550 PARTS LIST

No.	Description	Part No.
①	Antenna Choke	32-2063
②	Antenna Switch	42-1259
③	Condenser (50 mmfd.)	30-1029
④	Antenna Transformer	32-2433
⑤	First Padder (on Tun. Cond.)	
⑥	Tuning Condenser	31-2169
⑦	Condenser (.15-.25-.25-.25-.5 mfd.)	30-4557
⑧	Condenser (.05 mfd.)	30-4444
⑨	Resistor (1,000,000 ohms)	33-510344
⑩	R. F. Transformer	32-2231
⑪	Second Padder (on Tun. Cond.)	
⑫	Resistor (70,000 ohms)	33-370344
⑬	Condenser (6,000 mmfd.)	30-4467
⑭	Sensitivity Control	33-5261
⑮	Third Padder (on Tun. Cond.)	
⑯	Oscillator Transformer	32-2232
⑰	Condenser (250 mmfd.)	30-1032
⑱	Low Frequency Padder	31-6056
⑲	Resistor (99,000 ohms)	33-399344
⑳	Resistor (45,000 ohms)	33-345344
㉑	Padder (Pri. 1st I. F. Trans.)	
㉒	First I. F. Transformer	32-2286
㉓	Padder (Sec. 1st I. F. Trans.)	
㉔	Condenser (.1 mfd.)	30-4499
㉕	Resistor (1,500 ohms)	33-215344
㉖	Padder (Pri. 2nd I. F. Trans.)	
㉗	Second I. F. Transformer	32-2167
㉘	Padder (Sec. 2nd I. F. Trans.)	
㉙	Condenser (250 mmfd.)	30-1032
㉚	Resistor (25,000 ohms)	33-325344
㉛	Condenser (110 mmfd.)	30-1031
㉜	Resistor (330,000 ohms)	33-433344
㉝	Condenser (.01 mfd.)	30-4479
㉞	Volume Control (1,000,000 ohms)	33-5257
㉟	Resistor (6,000 ohms)	33-260344
㊱	Resistor (600 ohms)	33-1212
㊲	Resistor (20,000 ohms)	33-320344
㊳	Condenser (.05 mfd.)	30-4444
㊴	Resistor (40,000 ohms)	33-340444
㊵	Resistor (240,000 ohms)	33-424344
㊶	Resistor (490,000 ohms)	33-449344
㊷	Resistor (240,000 ohms)	33-424344
㊸	Condenser (.01 mfd.)	30-4501
㊹	Condenser (250 mmfd.)	30-1032
㊺	Condenser (6,000 mmfd.)	30-4024
㊻	Condenser (.03 mfd.)	30-4560
㊼	Tone Control Switch	42-1399
㊽	Output Transformer	32-7942
㊾	Condenser (250 mmfd.)	30-1032
㊿	Cone & Voice Coil	45-2607
(51)	Field Coil Assembly	36-4012
	Complete Speaker (K-50)	36-1376
(52)	Condenser (.25 mfd.)	30-4557
(53)	Resistor (1,500 ohms)	33-215344
(54)	Accessory Speaker	36-1281
(55)	On-Off Switch	42-1368
(56)	Pilot Lamp	34-2040
(57)	Condenser (.5 mfd.)	30-4474
(58)	Condenser (250 mmfd.)	30-1032
(59)	"A" Choke	32-1374
(60)	Condenser (250 mmfd.)	30-1032
(61)	Filament Choke	32-2729
(62)	Vibrator Choke	32-2812
(63)	Condenser (.5 mfd.)	30-4474
(64)	Vibrator	41-3170-3
(65)	Resistor (200 ohms)	33-120344
(66)	Power Transformer	32-7911
(67)	Condenser (7,500 mmfd.)	30-4420
(68)	Filter Choke	32-7722
(69)	Filter Condenser (4-8 mfd.)	30-2179
(70)	Condenser (250 mmfd.)	30-1032
(71)	Condenser (25 mmfd.)	30-1067
	Receiver Housing	38-2123
	Accessory Speaker Socket	27-6025
	Four Prong Base Socket	27-6044
	Five Prong Base Socket	27-6035
	Six Prong Base Socket	27-6036
	Seven Prong Base Socket	27-6037
	Receiver Mtg. Plate	28-4650
	Fuse	45-2559
	Tuning Shaft (P-6, D-8)	28-8842
	Tuning Shaft (S-5, C-18, C-19)	28-8845
	Tuning Shaft (C-20)	28-8848
	Volume Shaft (P-6, D-8)	28-8843
	Volume Shaft (S-5, C-18, C-19)	28-8846
	Volume Shaft (C-20)	28-8849
	Tone Shaft (P-6, D-8)	28-8844
	Tone Shaft (S-5, C-18, C-19)	28-8847
	Tone Shaft (C-20)	28-8850
	Tuning & Volume Knob (P-6)	27-4659
	Tuning & Volume Knob (D-8)	27-4660
	Tuning & Volume Knob (S-5)	27-4661
	Tuning & Volume Knob (C-18, C-19)	27-4662
	Tuning & Volume Knob (C-20)	27-4692
	Tone Knob (P-6)	27-4665
	Tone Knob (D-8)	27-4666
	Tone Knob (S-5)	27-4667
	Tone Knob (C-18, C-19)	27-4668
	Tone Knob (C-20)	27-4693
	Scale Assembly (P-6, D-8)	42-5637
	Face Assembly (S-5)	27-5376
	Face Assembly (C-18, C-19, C-20)	27-5377
	Pointer Shaft Assembly (S-5, C-18, C-19, C-20)	42-5802
	Distributor Resistor	33-1113
	Interference Condenser	30-4007
	Interference Condenser	30-4490
	Receiver Mtg. Bolt	W-825
	Receiver Mtg. Nut	W-98

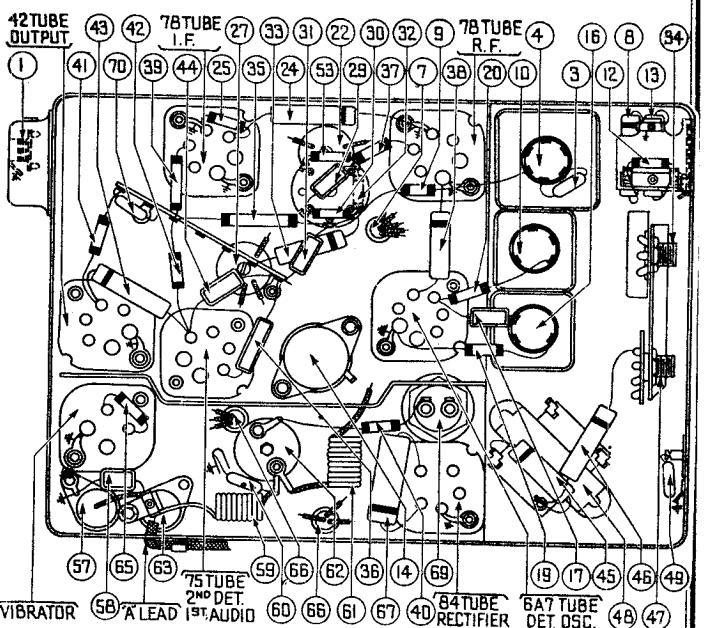

FIGURE 2

©John F. Rider, Publisher

©John F. Rider, Publisher

MODEL C-1550
CHRYSLER

I. F. TRANSFORMERS AND PADDERS

The I. F. transformers are assembled complete with padding condensers.

Both the primary and secondary padders are placed side by side in the top of the transformer shield can. The adjusting screws are accessible thru the holes in the top of the shield. (See Figure 4).

The coil windings terminate in leads instead of terminals or lugs. The color scheme of the leads is given in Figure 8.

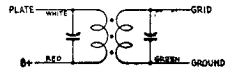

FIGURE 3

If replacements are ever necessary, replace the entire coil assembly, 32-2286 for the first I. F. stage and 32-2167 for the second I. F. stage. Neither the coil nor the padders will be furnished separately. Order only by the above numbers.

MODEL C-1550 ADJUSTMENTS

All padding adjustments are carefully made at the factory and ordinarily no readjustments are necessary. However, when readjustments are required, the procedure given below must be followed in detail.

Equipment

Fully charged heavy duty storage batteries or 6-volt power pack, 048A or 099 Philco Set Tester, 3164 Padding wrench, 27-7159 Padding screw driver.

General

OUTPUT METER — The output meter must be connected by means of an adapter to the plate of the type 42 output tube and to the Receiver chassis.

SIGNAL GENERATOR — With the Receiver and signal generator set up for operation at the prescribed frequency, turn the Receiver volume control on full and set the signal generator attenuator so that a half scale reading is obtained on the output meter. The signal in the speaker should be audible but not loud.

The shielding on the signal generator output lead must be connected to the Receiver housing.

Procedure

I. F. — Set the signal generator at exactly 260 K. C.

Connect the generator lead to the grid cap of the 6A7 tube in series with a .1 mfd. condenser (without removing the grid clip). Adjust the screw padders (27), (63), (26) and (28) on the first and second I. F. transformers for maximum reading on the output meter. (See Figure 4 for location of padders).

HIGH FREQUENCY AND R. F. — After padding the I. F. stages remove the generator lead from the 6A7 tube.

Set the signal generator at 1550 K. C. and then connect the generator lead to the grid cap of the 78 R. F. tube in series with a .1 mfd. condenser (without removing the grid clip).

Place a piece of paper approximately .006" thick as a gauge between the heel of the rotor plates and the stator plates, on the oscillator section of the tuning condenser. Turn the rotor plates in mesh until they strike against the paper.

With the tuning condenser in this position, adjust the high frequency padder (18) and the R. F. padder (11) until the maximum reading is obtained on the output meter. This is the true setting for 1550 K. C., 155 on the dial scale.

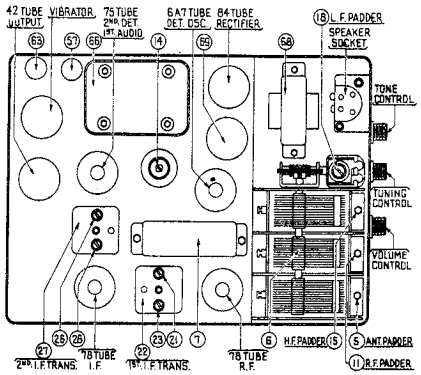

FIGURE 4

LOW FREQUENCY — Turn the tuning condenser plates in mesh to approximately 580 K. C., 58 on the dial scale and set the signal generator at 580 K. C. Roll the tuning condenser and adjust the low frequency padder screw (28) for maximum reading on the output meter.

HIGH FREQUENCY READJUSTMENT — Turn the tuning condenser plates out of mesh to 1550 K. C. and set the signal generator at 1550 K. C. Then adjust the high frequency padder (18) again for maximum reading on the output meter.

Remove the generator lead from the 78 R. F. tube.

ANTENNA — WHEN PADDING THE ANTENNA STAGE, IT IS EXTREMELY IMPORTANT THAT THE PROPER DUMMY ANTENNA BE CONSTRUCTED AND USED.

Connect the signal generator lead to the antenna cable assembly (made up of Part No. L-2065 lead, and a 25 mmfd. condenser in series between the lead and the signal generator). Plug the cable into the antenna connector on the end of the Receiver.

Remove the snap button cover over the antenna selector and advance the selector switch to the "Skyway" Antenna position.

Follow this padding procedure regardless of whether the Receiver is used with the "Skyway" or "Roadway" Antenna.

Turn the tuning condenser to 1400 K. C. and set the generator at 1400 K. C. Adjust the padders (11) and (5) for the maximum reading on the output meter.

When the antenna stage adjustment is made with the Receiver installed in the car, the antenna lead must be connected to the Receiver in the usual manner. Connect the signal generator output lead to a wire placed near the car antenna but not connected to it.

MODEL C-1550 CHRYSLER AND DESOTO CONTROLS
CHRYSLER C-18, C-19, C-20
DESOTO S-5

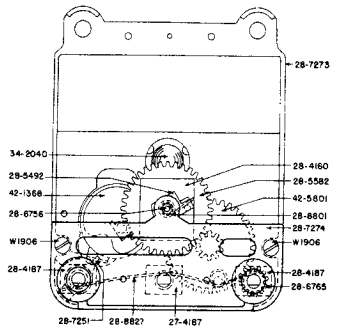

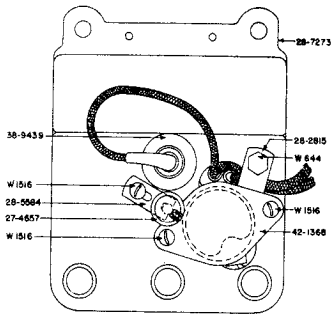

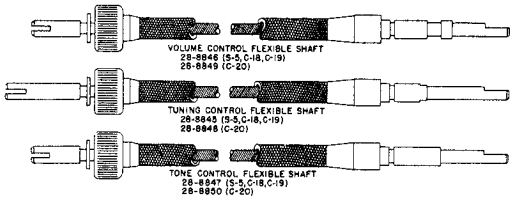

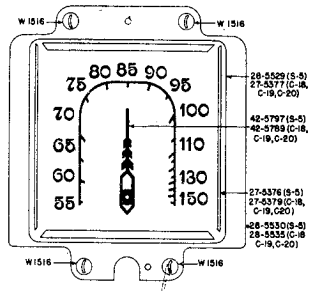

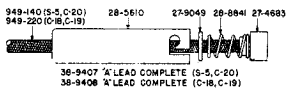

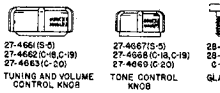

PARTS LIST AND PRICES
(Prices Subject to Change Without Notice)

PART NUMBER	DESCRIPTION	LIST PRICE
W-644	Screw ..... per 100	$1.50
W-1516	Screw ..... per 100	1.50
W-1906	Screw	*
27-4657	Knob	*
27-4661	Tuning & Volume Knob (S-5)	.25
27-4662	Tuning & Volume Knob (C-18, C-19)	.25
27-4663	Tuning & Volume Knob (C-20)	.30
27-4667	Tone Knob (S-5)	.20
27-4668	Tone Knob (C-18, C-19)	.20
27-4669	Tone Knob (C-20)	.25
27-4683	Ferrule	.03
27-5376	Dial (S-5)	*
27-5377	Dial (C-18, C-19, C-20)	*
27-5379	Glass (C-18, C-19, C-20)	.35
27-9049	Washer ..... per 100	.80
28-2815	Clamp	.01
28-4160	Spring	.01
28-4187	Washer	.01
28-5492	Pointer Stop	*
28-5529	Dial (S-5)	.50
28-5530	Dial Retainer (S-5)	*
28-5535	Glass Retainer (C-18, C-19, C-20)	*
28-5582	Gear	*
28-5584	Plate	*
28-5610	Fuse Housing	.05
28-6756	Pointer Shaft	*
28-6765	Drive Gear	*
28-6788	Gland Nut	.20
28-6820	Gland Nut	*
28-7251	Switch Lever	.15
28-7273	Control Housing	*
28-7274	Cover	*
28-8801	Anti-back Lash Spring	*
28-8827	Spring	*
28-8841	Spring	.01
28-8845	Tuning Shaft (S-5, C-18, C-19)	*
28-8846	Volume Shaft (S-5, C-18, C-19)	*
28-8847	Tone Shaft (S-5, C-18, C-19)	*
28-8848	Tuning Shaft (C-20)	*
28-8849	Volume Shaft (C-20)	*
28-8850	Tone Shaft (C-20)	*
34-2040	Pilot Lamp	.09
38-9407	"A" Lead	*
38-9408	"A" Lead	*
38-9439	Pilot Lamp Assembly	*
42-1368	On-Off Switch	.35
42-5789	Pointer (C-18, C-19, C-20)	.15
42-5797	Pointer (S-5)	*

* Prices not available at this time.

Printed in U. S. A.

MODEL 39-55
Schematic

PHILCO RADIO & TELEV. CORP.

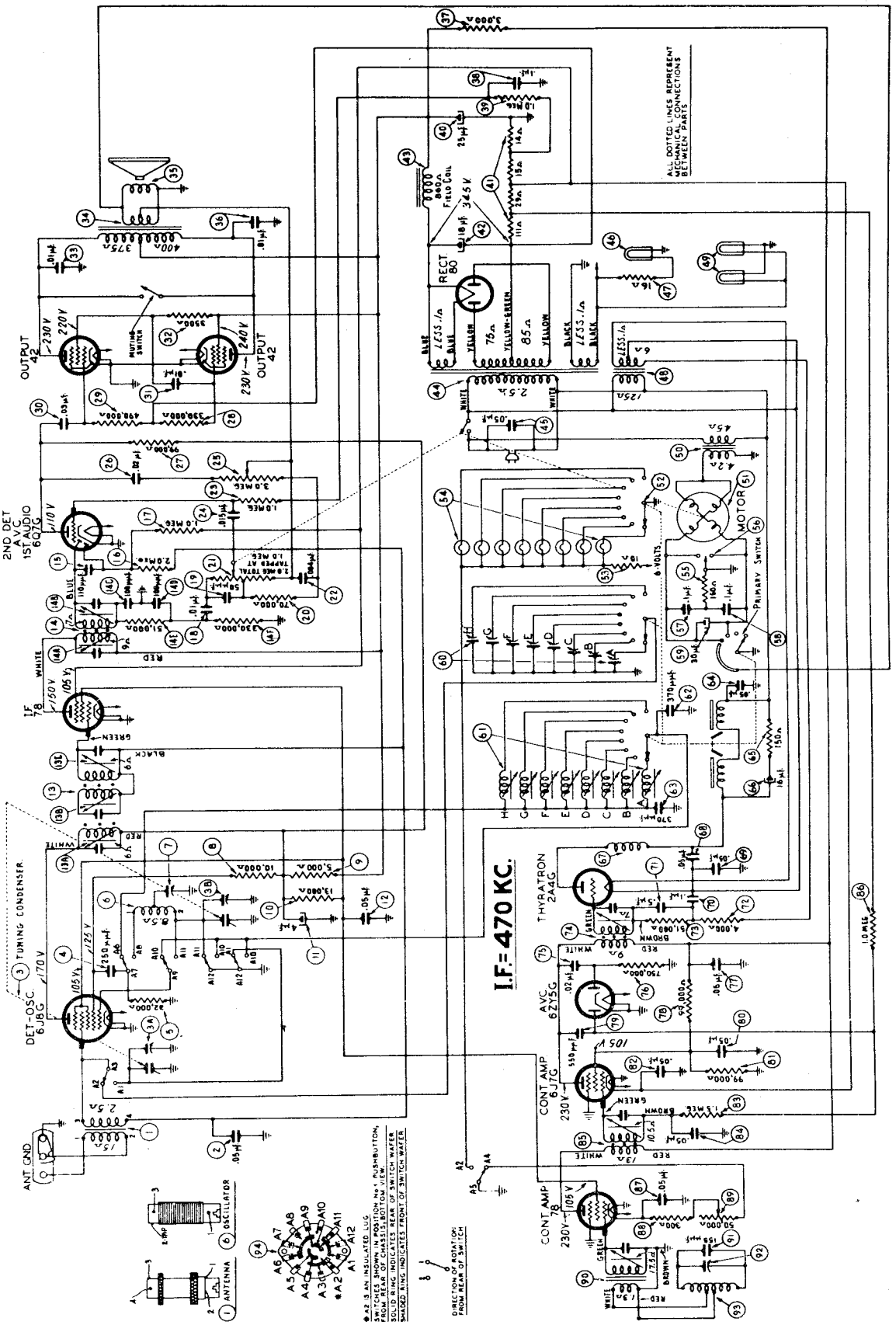

Model 3955 Schematic Diagram and Socket Voltages

Voltages measured from Socket Contacts to Chassis; Line Voltage, 115 V.A.C.; Volume Control, Minimum; Range Selector (Broadcast).

©John F. Rider, Publisher

Adjusting Control Frequency Amplifier

The Mystery Control receivers are shipped with five (5) different control frequencies which range from 350 to 400 K.C. These are identified by code numbers appearing on the serial number ticket and on the rear of the chassis. These code numbers and frequencies are as follows:

Code 5—355 K.C.
Code 6—367 K.C.
Code 7—375 K.C.
Code 8—383 K.C.
Code 9—395 K.C.

The purpose of the different control frequencies is to prevent interaction between two Mystery Control receivers which are on the same floor or are exceptionally close together. When several Mystery Control receivers are to be located close together, it will be necessary to use different control frequencies to avoid interaction between the receivers. In order to prevent interaction between receivers, there should be a difference of 20 K.C. between their control frequencies.

If three receivers are to be operated at the same time and are closely situated, it will be advisable to adjust the control frequency of the first set to 355 K.C., the second set to 375 K.C. and the third to 395 K.C.

When realigning or changing the control frequency of the Mystery Control circuit, a Philco Model 077 Signal Generator with a coil of wire (about 4 or 5 turns—12" in diameter) attached to the output terminals is required. The leads between the coil of wire and Signal Generator should be long enough so that the coil of wire can be placed near the large secondary inductor in the bottom of the receiver cabinet.

With this apparatus, the Control Frequency is adjusted as follows:

1. With the temporary coil of wire in the center of (or near) the secondary inductor, the control frequency to which the Mystery Control Amplifier is tuned can be determined by tuning the Signal Generator between 350 and 400 K.C. When the Signal Generator is tuned to the control frequency, the Thyratron (2A4G) tube will glow (blue haze). If this frequency is to be used, leave the Signal Generator indicator at this point or turn the indicator to any other frequency desired between 350 and 400 K.C.
2. When the control frequency is selected, turn the sensitivity control (117) in Model 116 and (89) Model 55 located on the left rear of the chassis—towards the position marked "extreme." Using the 2A4G Thyratron tube as a resonance indicator, adjust padders (103), (115), (119) in Model 116 and (74), (85), (90) in Model 55 for maximum signal. This will be indicated by the brilliance of the glow in the 2A4G Thyratron tube. As the padders are adjusted, gradually turn the sensitivity control to the "near" position or reduce the output from the Signal Generator. When the padders are correctly adjusted to maximum, the Thyratron will glow with the sensitivity control (117) at the "near" position and with a very weak signal from the Signal Generator.
3. Next, adjust the padding condenser (121) in Model 116 and (92) in Model 55 on the secondary inductor located in the bottom of the receiver. The padding condenser is located in one corner of the secondary inductor and is encased in a cardboard container. This padding condenser should be carefully adjusted for maximum glow in the 2A4G tube. Use the weakest signal possible from the Signal Generator that will cause the 2A4G to glow. Also, have the sensitivity control as close as possible to the "near" position. Extreme care should be used in adjusting the padder to the exact point of resonance, as the secondary inductor is a very sharply tuned circuit. After adjusting the circuit, remove the Signal Generator and loop from the receiver.
4. The Mystery Control unit is now adjusted as follows:
   - **A.** Dial any one of the stations indicated on the remote unit by pulling the selector to the "Stop" position. Then, as the dial is released at the "Stop," press the "Stop" down and hold it in this position.
   - **B.** Holding the "Stop" in this position, bring the Mystery Control unit close to the receiver. Using the padding wrench, tune the padding screw (126) located on the bottom of the unit until the 2A4G Thyratron in the receiver glows at full brilliance.

     Now, turn the sensitivity control on the receiver towards the "near" position until a point is reached where the 2A4G tube almost stops glowing. Then, readjust the padder (126) of the unit again for maximum brilliance in the 2A4G tube. The Mystery Control unit should now be adjusted to the same frequency as the control frequency in the receiver.

Replacement Parts

Schem. No.	Description	Part No.
1	Antenna Transformer	32-3056
2	Tubular Condenser (.05 mfd.)	30-4519
3	Tuning Condenser	31-2311
4	Mica Condenser (250 mmfd.)	30-1032
5	Resistor (32,000 ohm—½ watt)	33-332339
6	Oscillator Transformer	32-2120
7	Compensator	31-6230
8	Resistor (10,000 ohm—½ watt)	33-310339
9	Resistor (5,000 ohm—2 watt)	33-250539
10	Resistor (13,000 ohm—1 watt)	33-313339
11	Electrolytic Condenser (4 mfd.—250 V.)	30-2334
12	Tubular Condenser (.05 mfd.)	30-4123
13	1st I.F. Transformer Assembly	32-3089
14	2nd I.F. Transformer Assembly	32-2645
15	Mica Condenser (110 mmfd.)	30-1031
16	Resistor (2.0 meg.)	33-520339
17	Resistor (1.0 meg.)	33-510339
18	Tubular Condenser (.01 mfd.)	30-4479
19	Mica Condenser (50 mmfd.)	30-1029
20	Resistor (70,000 ohm)	33-370339
21	Volume Control (2 meg.)	33-5300
22	Tubular Condenser (.004 mfd.)	30-4334
23	Resistor (1 meg.)	33-510339
24	Tubular Condenser (.015 mfd.)	30-4358
25	Tone Control (3.0 meg.)	33-5287
26	Tubular Condenser (.02 mfd.)	30-4481
27	Resistor (99,000 ohm)	33-399339
28	Resistor (330,000 ohm)	33-433339
29	Resistor (490,000 ohm)	33-449339
30	Tubular Condenser (.03 mfd.)	30-4517
31	Tubular Condenser (.01 mfd.)	30-4501
32	Resistor (3500 ohm)	33-235339
33	Tubular Condenser (.01 mfd.)	30-4501
34	Output Transformer	32-7997
35	Voice Coil & Cone Assembly (Spkr. No. 36-1450)	36-4089
36	Tubular Condenser (.01 mfd.)	30-4501
37	Resistor (3,000 ohm—½ watt)	33-230339
38	Tubular Condenser (.1 mfd.)	30-4499
39	Resistor (1 meg.)	33-510339
40	Electrolytic Condenser (25 mfd.—300 V.)	30-2360
41	B.C. Resistor	33-3361
42	Electrolytic Condenser (18 mfd.—475 V.)	30-2200
43	Field Coil Replace Speaker No. 36-1450	
44	Power Trans. (115 V., 50 to 60 cycles)	32-7999
	Power Trans. (115 V., 25 to 40 cycles)	32-8013
45	Condenser (.05 mfd.) (110 V. Plug)	30-4576
46	Pilot Light Bulb (Bullseye)	34-2210
47	Pilot Light Resistor (16 ohm—1 watt)	33-016431
48	Filament Transformer (115 V., 50 to 60 cycles)	32-7993
	Filament Trans. (115 V., 25 to 40 cycles)	32-8016
49	Pilot Lamp Bulbs (Dial)	34-2064
50	Motor Trans. (115 V., 50 to 60 cycles)	32-7990
	Motor Trans. (115 V., 25 to 40 cycles)	32-8015
51	Volume Control Motor Assembly	35-1151
52	Rotary Switch	42-1468
53	Resistor—Bias	33-3363
54	Pilot Lamps (Station Indicator)	34-2064
55	Resistor (150 ohm)	33-115339
56	Volume Control Switch (Motor Control)	42-1469
57	Tubular Condenser (.1 mfd.)	30-4499
58	Tubular Condenser (.1 mfd.)	30-4499
59	Electrolytic Condenser (30 mfd.—30 V.)	30-2361
60	Push Button Compensator Strip	31-6264
60A	Compensator No. 1 (540—1030 K.C.)	
60B	Compensator No. 2 (540—1030 K.C.)	
60C	Compensator No. 3 (670—1160 K.C.)	
60D	Compensator No. 4 (670—1160 K.C.)	
60E	Compensator No. 5 (900—1470 K.C.)	
60F	Compensator No. 6 (900—1470 K.C.)	
60G	Compensator No. 7 (1170—1600 K.C.)	
60H	Compensator No. 8 (1170—1600 K.C.)	
61	Electric Push-Button Coil Assembly	32-3091
61A	Oscillator Coil No. 1 (540—1030 K.C.)	32-3042
61B	Oscillator Coil No. 2 (540—1030 K.C.)	32-3042
61C	Oscillator Coil No. 3 (670—1160 K.C.)	32-3042
61D	Oscillator Coil No. 4 (670—1160 K.C.)	32-3042
61E	Oscillator Coil No. 5 (900—1470 K.C.)	32-3041
61F	Oscillator Coil No. 6 (900—1470 K.C.)	32-3041
61G	Oscillator Coil No. 7 (1170—1600 K.C.)	32-3041
61H	Oscillator Coil No. 8 (1170—1600 K.C.)	32-3041
62	Silver Mica Condenser (370 mmfd.)	30-1110
63	Silver Mica Condenser (370 mmfd.)	30-1110
64	Bakelite Condenser (.05 mfd.)	3615-SG
65	Resistor (150 ohm wirewound)	33-3362
66	Electrolytic Condenser (16 mfd.—200 V.)	30-2356
67	Choke Coil	32-1281
68	Tubular Condenser (.05 mfd.)	30-4123
69	Tubular Condenser (.05 mfd.)	30-4123
70	Tubular Condenser (.1 mfd.)	30-4499
71	Tubular Condenser (.5 mfd.)	30-4551
72	Resistor (4,000 ohm—½ watt)	33-240339
73	Resistor (51,000 ohm—½ watt)	33-351339
74	No. 3 Control Amp. Coil	32-3088
75	Tubular Condenser (.02 mfd.)	30-4516
76	Resistor (750,000 ohm)	33-475339
77	Tubular Condenser (.05 mfd.)	30-4123
78	Resistor (99,000 ohm)	33-399339
79	Mica Condenser (550 mmfd.)	30-1092
80	Tubular Condenser (.05 mfd.)	30-4123
81	Resistor (99,000 ohm)	33-399339
82	Tubular Condenser (.05 mfd.)	30-4444
83	Resistor (1.5 meg.—½ watt)	33-515339
84	Tubular Condenser (.05 mfd.)	30-4519
85	No. 2 Control Amp. Coil	32-3087
86	Resistor (1.0 meg.—½ watt)	33-510339
87	Tubular Condenser (.05 mfd.)	30-4444
88	Resistor (300 ohm)	33-130339
89	Sensitivity Control (50,000 ohm)	33-5295
90	No. 1 Control Amp. Coil	32-3086
91	Silver Mica Condenser (155 mmfd.)	30-1121
92	Air Padder (Secondary Inductor)	31-6268
93	Secondary Inductor Cabinet	40-6414
94	Range Switch	42-1454

Miscellaneous Parts

Bezel Assembly (Cabinet)	38-9746
Bezel Screws	W-1835
Cable (Tuning Drum)	31-2315
Cable (Pointer)	31-2320
Dial	27-5422
Dial Pointer	56-1033
Disc (Tuning)	27-4766
Disc (Volume)	27-4765
Disc (Range Switch)	27-4767
Disc (Tone Control)	27-4764
Pilot Lamp Assembly	38-9694
Pilot Lamp Assembly	38-9711
Pilot Lamp Assembly	38-9712
Socket (4 Prong)	27-6044
Socket (5 Prong)	27-6035
Socket (6 Prong)	27-6036
Socket (7 Prong)	27-6057
Socket (6 Prong)	27-6086
Socket (7 Prong)	27-6099
Speaker	36-1450
Spring (Tuning Cables)	28-8913
Washer (Keyed Washer Tuning Disc)	56-1029
Washer (Spring Washer Tuning Disc)	6717

©John F. Rider, Publisher

MODEL 39-55
Chassis Layout

PHILCO RADIO & TELEV. CORP.

MODELS 39-55, 39-116
Trimmers, Dial Drive
"Mystery Control"
Schematic

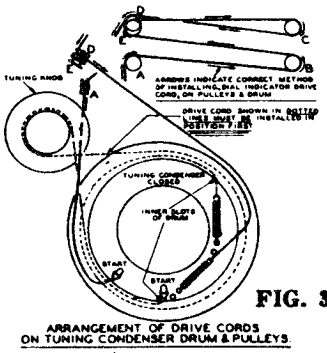

FIG. 3—Arrangement of Dial Pointer and Cables

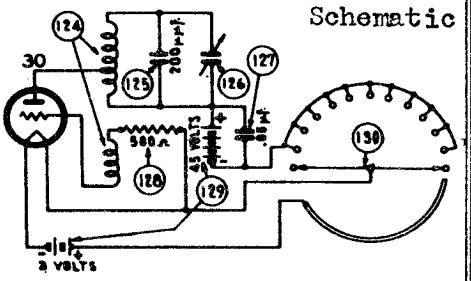

Mystery Control Unit Diagram

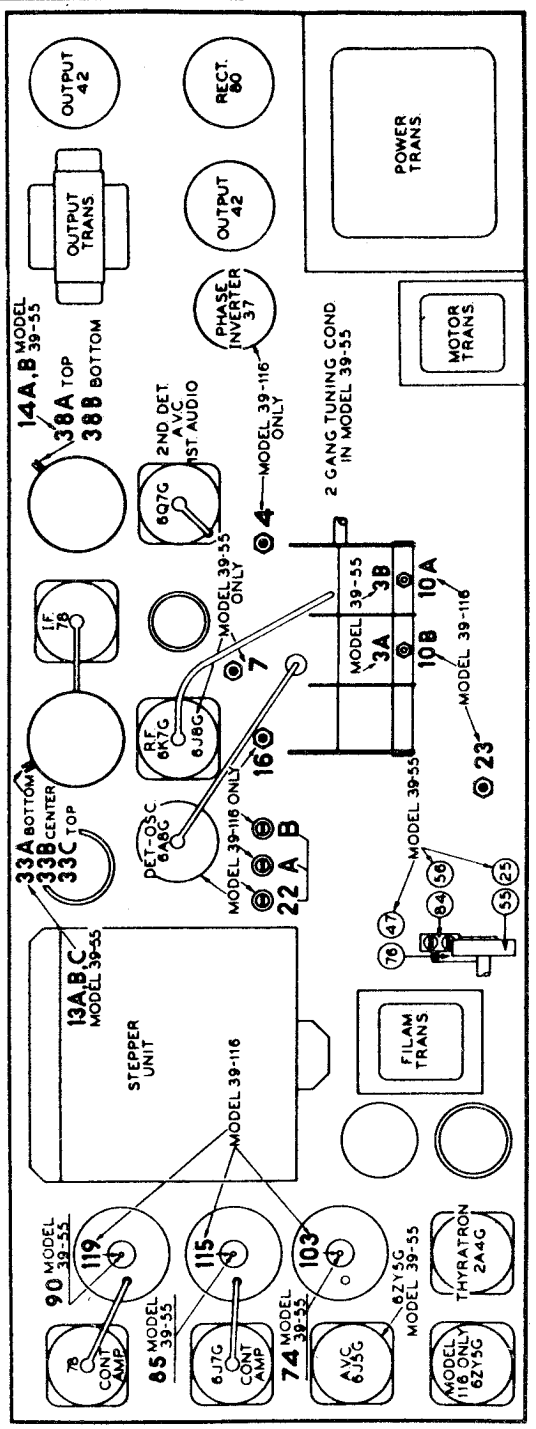

FIG. 4—Locations of Compensators—Model 39-55 and 39-116

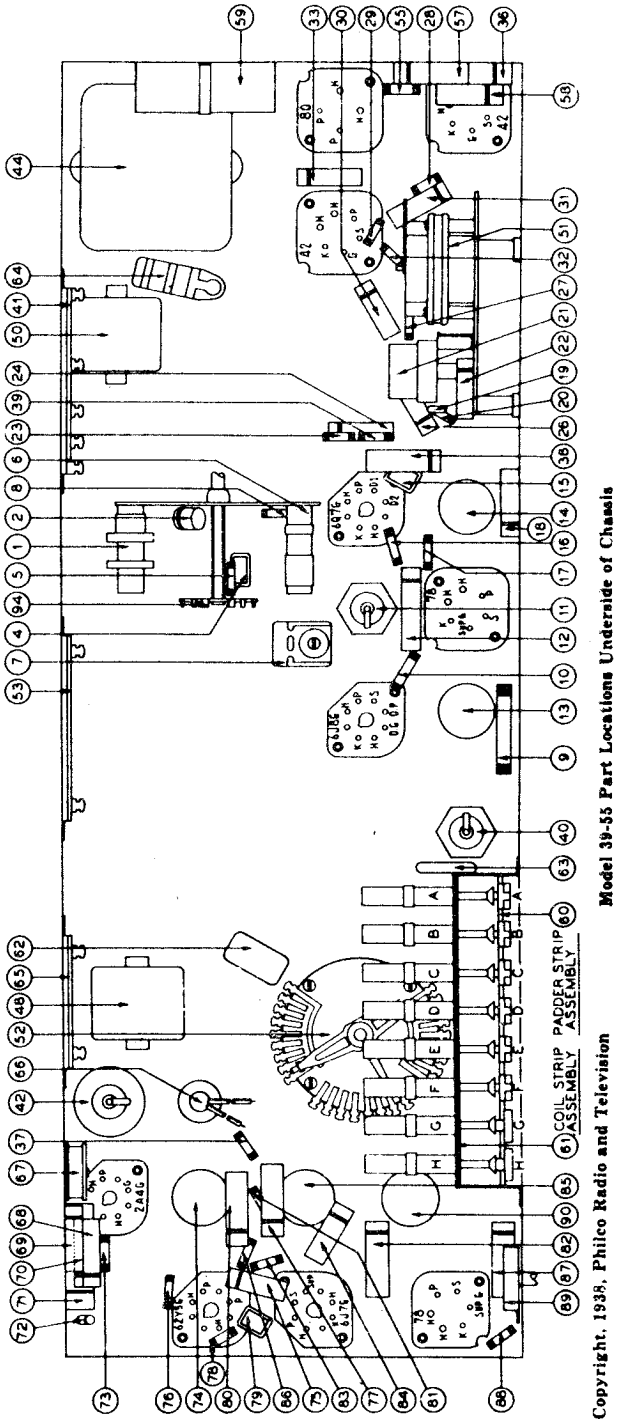

©John F. Rider, Publisher

MODELS 39-55,39-116
Alignment

PHILCO RADIO & TELEV. CORP.

Alignment of Compensators and Mystery Control Models 39-55, 39-116

EQUIPMENT REQUIRED:

(1) Signal Generator; Philco Model 077.

(2) Output Meter, Philco Model 027 Circuit Tester.

(3) Philco Fiber Handle Screw Driver, Part No. 27-7059, and Fiber Wrench, Part No. 3164.

OUTPUT METER:

The Philco 027 Output Meter is connected to the plate terminals of the type 42 tubes and adjusted for the 0 to 30 V.A.C. scale. After connecting the output meter, adjust the compensators in the order as shown in the tabulations below. Locations of the Compensators are shown in Fig. 4. If the output meter pointer goes off scale when adjusting the compensators, reduce the strength of the signal from the generator.

RADIO RECEIVER CIRCUIT ADJUSTMENTS Model 39-116

Operation	SIGNAL GENERATOR			RECEIVER			Special Instructions
	Output Connections to Receiver	Dummy Antenna (Note A)	Dial Setting	Dial Setting	Control Setting	Adjust Compensators	
1	78 Grid	.1 mfd.	470 K.C.	580 K.C.	Vol. Max. Range Switch Brdcst.	38A, 38B	Turn Out 33B Full
2	6A8 Grid	.1 mfd.	470 K.C.	580 K.C.	Vol. Max. Range Switch Brdcst.	33C, 33A, 33B, 38B	Note B
3	Antenna and Ground	150 mmfd.	1550 K.C.	1550 K.C.	Vol. Max. Range Switch Brdcst.	22, 10B, 10A	
4	Antenna and Ground	150 mmfd.	580 K.C.	580 K.C.	Vol. Max. Range Switch Brdcst.	23	Rollgang
5	Antenna and Ground	150 mmfd.	1550 K.C.	1550 K.C.	Vol. Max. Range Switch Brdcst.	22	
6	Antenna and Ground	400 ohms	5.0 M.C.	5.0 M.C.	Vol. Max. Range Switch Police	22A	
7	Antenna and Ground	400 ohms	18.0 M.C.	18.0 M.C.	Vol. Max. Range Switch Short Wave	22B, 16, 4	Note C

RADIO RECEIVER CIRCUIT ADJUSTMENTS Model 39-55

Operation	SIGNAL GENERATOR			RECEIVER			Special Instructions
	Output Connections to Receiver	Dummy Antenna (Note A)	Dial Setting	Dial Setting	Control Setting	Adjust Compensators	
1	78 Grid	.1 mfd.	470 K.C.	580 K.C.	Vol. Max. Range Switch Brdcst.	14A, 14B	Turn Out 13B Full
2	6J8G Grid	.1 mfd.	470 K.C.	580 K.C.	Vol. Max. Range Switch Brdcst.	13C, 13A 13B, 14B	Note B
3	Antenna and Ground	150 mmfd.	1550 K.C.	1550 K.C.	Vol. Max. Range Switch Brdcst.	3B, 3A	
4	Antenna and Ground	150 mmfd.	580 K.C.	580 K.C.	Vol. Max. Range Switch Brdcst.	7	Rollgang
5	Antenna and Ground	150 mmfd.	1550 K.C.	1550 K.C.	Vol. Max. Range Switch Brdcst.	3B, 3A	Note C

NOTE A—The "Dummy Antenna" consists of a condenser connected in series with the signal generator output lead (high side). Use the capacity as specified in each step of the above procedure.

NOTE B—Dial Calibration: In order to adjust the receiver correctly the dial must be aligned to track properly with the tuning condenser. To adjust the dial, proceed as follows: With the tuning condenser closed (maximum capacity), set the dial pointer on the extreme left index line at the low frequency end of the broadcast scale. The arrangement of the drive cable is shown in Fig. 3.

NOTE C - SEE PAGE 9-56 FOR CONTROL FREQUENCY AMPLIFIER ADJUSTMENTS FOR MODELS 39-55 AND 39-116.

©John F. Rider, Publisher

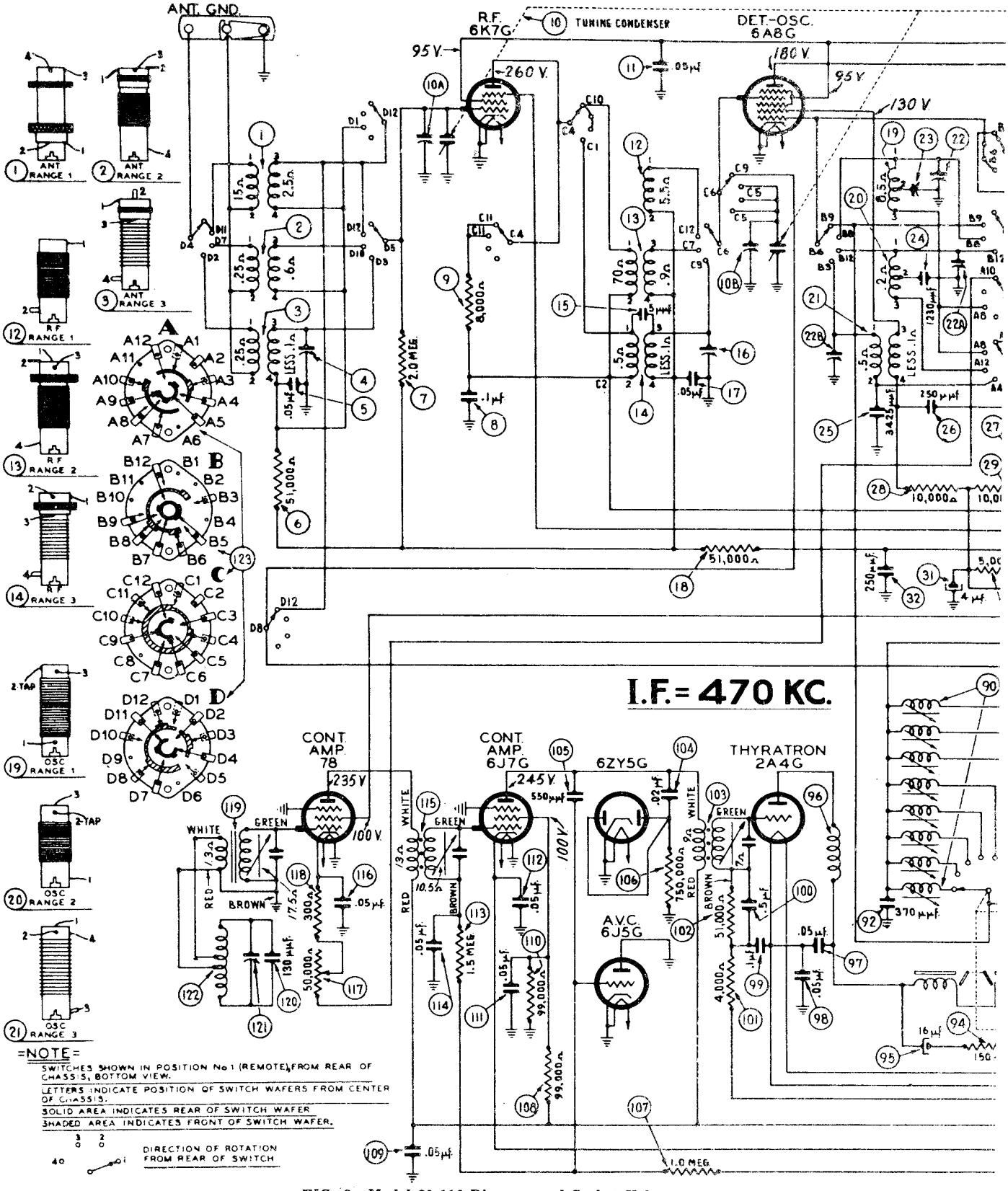

FIG. 2—Model 39-116 Diagram and Socket Voltages

See Bulletin 310 A for 39-55 Schematic and Parts List.

Socket Voltage Measured for Socket Contacts to Chassis, Line Voltage 115 VAC, Volume Minimum, Range Selector (Broadcast)

©John F. Rider, Publisher

'ELEV. CORP.

MODEL 39-116
Schematic

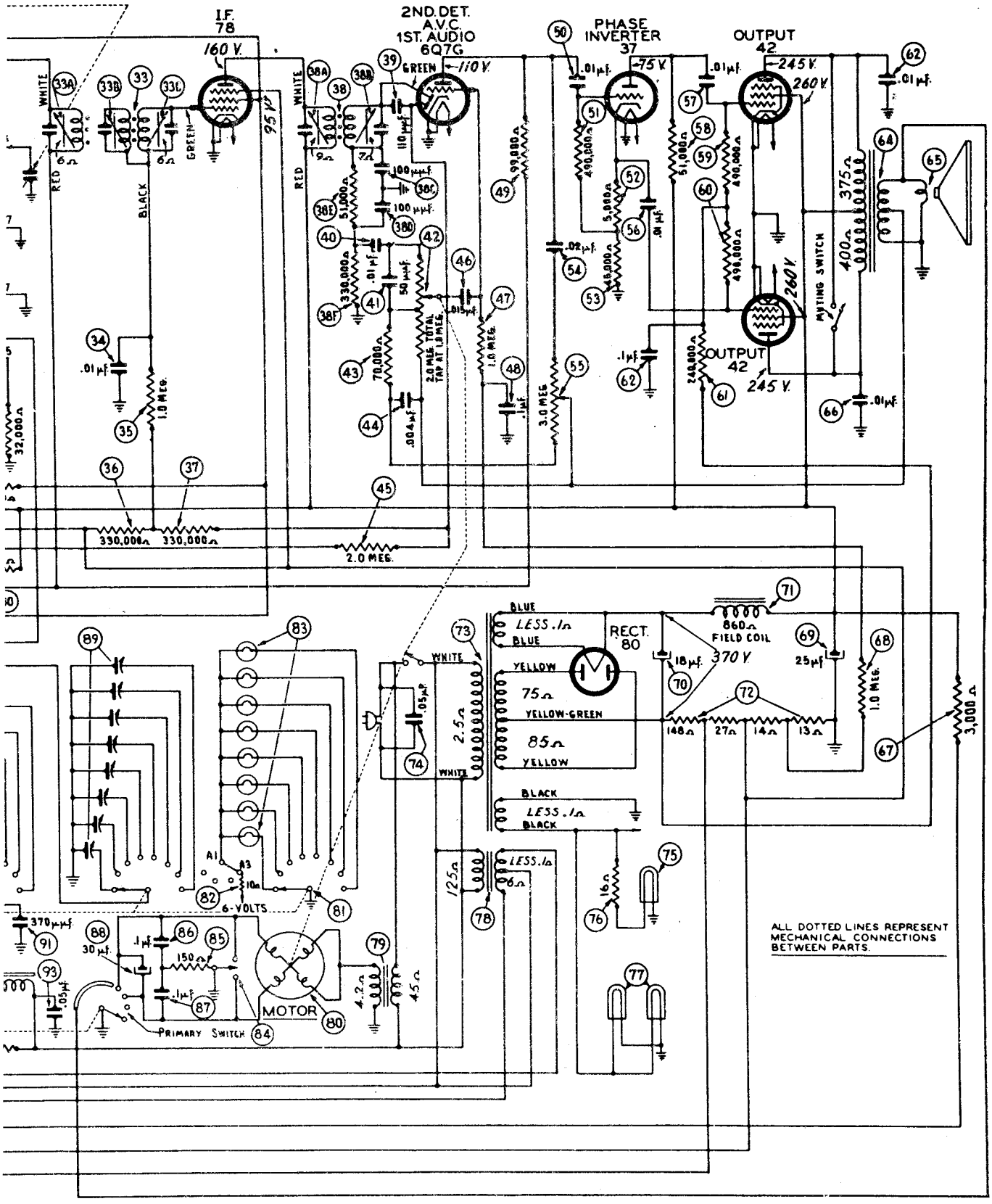

PHILCO RADIO & TELEV. CORP.

MODEL 39-116
Chassis Layout
Parts

Schem. No.	Description	Part No.
1	Antenna Transformer (BC)	32-3056
2	Antenna Transformer (Police)	32-3053
3	Antenna Transformer (S.W.)	32-3055
4	Compensator Antenna Shortwave	31-6212
5	Tubular Condenser (.05 mfd.)	30-4519
6	Resistor (51,000 ohm—½ watt)	33-351339
7	Resistor (2.0 meg.—½ watt)	33-520339
8	Tubular Condenser (.1 mfd.)	30-4455
9	Resistor (8,000 ohm—½ watt)	33-280339
10	Tuning Condenser	31-2308
11	Tubular Condenser (.05 mfd.)	30-4123
12	R.F. Transformer (B.C.)	32-2379
13	R.F. Transformer (Police)	32-3054
14	R.F. Transformer (S.W.)	32-3046
15	Mica Condenser (5 mmfd.)	30-1097
16	Compensator R.F. Shortwave	31-6212
17	Tubular Condenser (.05 mfd.)	30-4519
18	Resistor (51,000 ohm—½ watt)	33-351339
19	Oscillator Transformer (B.C.) (A3)	32-2129
20	Oscillator Transformer (Police)	32-3052
21	Oscillator Transformer (S.W.)	32-3051
22	Compensator Strip (oscillator)	31-6266
23	Compensator Broadcast Low Frequency	31-6230
24	Condenser Semi-fixed (1230 mmfd.)	31-6262
25	Condenser Semi-fixed (3425 mmfd.)	31-6263
26	Mica Condenser (250 mmfd.)	30-1032
27	Resistor (32,000 ohm—½ watt)	33-332339
28	Resistor (10,000 ohm—½ watt)	33-310339
29	Resistor (10,000 ohm— 1 watt)	33-310339
30	Resistor (5,000 ohm— 2 watt)	33-250339
31	Electrolytic Condenser (4 mfd.—250 V.)	30-2334
32	Mica Condenser (250 mmfd.)	30-1032
33	1st I.F. Transformer Assembly	32-3089
34	Tubular Condenser (.01 mfd.)	30-4572
35	Resistor (1.0 meg.—½ watt)	33-510339
36	Resistor (330,000 ohm—½ watt)	33-433339
37	Resistor (330,000 ohm—½ watt)	33-433339
38	2nd I.F. Transformer Assembly	32-2645
39	Mica Condenser (110 mmfd.)	30-1031
40	Tubular Condenser (.01 mfd.)	30-4479
41	Mica Condenser (50 mmfd.)	30-1029
42	Volume Control	33-5300
43	Resistor (70,000 ohm—½ watt)	33-370339
44	Tubular Condenser (.004 mfd.)	30-4334
45	Resistor (2.0 meg.—½ watt)	33-520339
46	Tubular Condenser (.015 mfd.)	30-4529
47	Resistor (1.0 meg.—½ watt)	33-510339
48	Tubular Condenser (.1 mfd.)	30-4527
49	Resistor (99,000 ohm—½ watt)	33-399339
50	Tubular Condenser (.01 mfd.)	30-4169
51	Resistor (490,000 ohm—½ watt)	33-449339
52	Resistor (5,000 ohm—½ watt)	33-250339
53	Resistor (45,000 ohm—½ watt)	33-345339
54	Tubular Condenser (.02 mfd.)	30-4481
55	Tone Control (3 meg.)	33-5287
56	Tubular Condenser (.01 mfd.)	30-4572
57	Tubular Condenser (.01 mfd.)	30-4572
58	Resistor (51,000 ohm—½ watt)	33-351339
59	Resistor (490,000 ohm—½ watt)	33-449339
60	Resistor (490,000 ohm—½ watt)	33-449339
61	Resistor (240,000 ohm—½ watt)	33-424339
62	Tubular Condenser (.1 mfd.)	30-4499
63	Tubular Condenser (.01 mfd.)	30-4501
64	Output Transformer	32-7996
65	Voice Coil & Cone Assembly (Speaker No. 36-1450)	36-4089
66	Tubular Condenser (.01 mfd.)	30-4501
67	Resistor (3,000 ohm—½ watt)	33-230339
68	Resistor (1.0 meg.—½ watt)	33-510339
69	Electrolytic Condenser (25 mfd.—300 V.)	30-2360
70	Electrolytic Condenser (18 mfd.—475 V.)	30-2200
71	Field Coil (Replace Speaker No. 36-1450)	
72	Resistor (Wirewound—Bias)	33-3364
73	Power Transformer (115 V.—50 to 60 cycles)	32-8001
	Power Trans. (115 V.—25 to 40 cycles)	32-8017
74	Bypass Condenser (.05 mfd.) (110 V. plug)	30-4576
75	Pilot Lamp (Bullseye)	34-2210
76	Pilot Lamp Resistor (16 ohm)	33-016431
77	Pilot Lamps (Dial)	34-2064
78	Filament Trans. (115 V.—50 to 60 cycles)	32-7993
	Filament Trans. (115 V.—25 to 40 cycles)	32-8018
79	Motor Trans. (115 V.—50 to 60 cycles)	32-7990
	Motor Trans. (115 V.—25 to 40 cycles)	32-8015
80	Motor (Volume Control) Assembly	35-1151
81	Rotary Switch (Stepper Unit)	42-1468
82	B.C. Resistor (10 ohm) Wirewound	33-3363
83	Pilot Lamp Assembly (Station Indicator)	34-2064
84	Switch (Volume Control—Motor)	42-1469
85	Resistor (150 ohm—½ watt)	33-115339
86	Tubular Condenser (.1 mfd.)	30-4499
87	Tubular Condenser (.1 mfd.)	30-4499
88	Electrolytic Condenser (30 mfd.—30 V.)	30-2361
89	Push Button Padder Unit	31-6264
89A	Compensator No. 1 (540-1030 K.C.) Part of 89	
89B	Compensator No. 2 (540-1030 K.C.) Part of 89	
89C	Compensator No. 3 (670-1160 K.C.) Part of 89	
89D	Compensator No. 4 (670-1160 K.C.) Part of 89	
89E	Compensator No. 5 (900-1470 K.C.) Part of 89	
89F	Compensator No. 6 (900-1470 K.C.) Part of 89	
89G	Compensator No. 7 (1100-1600 K.C.) Part of 89	
89H	Compensator No. 8 (1100-1600 K.C.) Part of 89	
90	Electric Push Button Transformer Assembly (8 Trans.)	32-3091
90A	Oscillator Trans. No. 1 (540-1030 K.C.)	32-3042
90B	Oscillator Trans. No. 2 (540-1030 K.C.)	32-3042
90C	Oscillator Trans. No. 3 (670-1160 K.C.)	32-3042
90D	Oscillator Trans. No. 4 (670-1160 K.C.)	32-3042
90E	Oscillator Trans. No. 5 (900-1470 K.C.)	32-3041
90F	Oscillator Trans. No. 6 (900-1470 K.C.)	32-3041
90G	Oscillator Trans. No. 7 (1100-1600 K.C.)	32-3041
90H	Oscillator Trans. No. 8 (1100-1600 K.C.)	32-3041
91	Silver Mica Condenser (370 mmfd.)	30-1110
92	Silver Mica Condenser (370 mmfd.)	30-1110
93	Bakelite Condenser (.05 mfd.)	3615-SG
94	Resistor (150 ohm)	33-3362
95	Electrolytic Condenser (16 mfd.—200 V.)	30-2356
96	Choke Coil	32-1281
97	Tubular Condenser (.05 mfd.)	30-4123
98	Tubular Condenser (.05 mfd.)	30-4123
99	Tubular Condenser (.1 mfd.)	30-4499
100	Tubular Condenser (.5 mfd.)	30-4551
101	Resistor (4,000 ohm—½ watt)	33-240339
102	Resistor (51,000 ohm—½ watt)	33-351339
103	No. 3 Control Amp. Transformer	32-3088
104	Tubular Condenser (.02 mfd.)	30-4516
105	Mica Condenser (550 mmfd.)	30-1092
106	Resistor (750,000 ohm—½ watt)	33-475339
107	Resistor (1.0 meg.—½ watt)	33-510339
108	Resistor (99,000 ohm—½ watt)	33-399339
109	Tubular Condenser (.05 mfd.)	30-4123
110	Resistor (99,000 ohm—½ watt)	33-399339
111	Tubular Condenser (.05 mfd.)	30-4123
112	Tubular Condenser (.05 mfd.)	30-4444
113	Resistor (1.5 meg.—½ watt)	33-515339
114	Tubular Condenser (05 mfd.)	30-4519
115	No. 2 Control Amp. Transformer	32-3087
116	Tubular Condenser (.05 mfd.)	30-4444
117	Sensitivity Control	33-5295
118	Resistor (300 ohm—½ watt)	33-130339
119	No. 1 Control Amp. Transformer	32-3086
120	Silver Mica (200 mmfd.)	30-1122
121	Compensator (Secondary Inductor)	31-6268
122	Secondary Inductor (Mystery Tuning)	40-6415
123	Wave Switch	42-1451

Mystery Control Unit

Schem. No.	Description	Part No.
124	Primary Inductor	32-3097
125	Silver Mica Cond.	30-1115
126	Air Padder	31-6268
127	Tubular Cond. (.05 mf.)	30-4519
128	Resistor (500 ohms—½ watt)	33-150339
129	Mystery Pack	41-8016
130	Dial Unit (Pulser)	38-9704

Mystery Control Unit

Bezel		56-1240
Bezel Screws		W-2138
Cap Tuning Disc		27-4793
Disc (Tuning)		27-4792
Pulser Assembly		38-9704
Stop (Tuning Disc)		27-4794
Socket (4 prong)		27-6119
Screw (Finger Stop)		W-2139
Spacer (Finger Stop)		27-4795
Socket	(4 prong)	27-6044
Socket	(5 prong)	27-6033
Socket	(6 prong)	27-6036
Socket	(7 prong) Octal	27-6057
Socket	(8 prong) Octal	27-6086
Socket	(7 prong) Octal	27-6099
Speaker		36-1450
Spring (Tuning Cables)		28-8913
Washer (Keyed Washer Tuning Disc)		56-1029
Washer (Spring Washer Tuning Disc)		6717

Miscellaneous Parts

Bezel Assembly (Cabinet)		38-9732
Bezel Screws		W-1885
Cable (Tuning Drum)		31-2315
Cable (Pointer)		31-2320
Dial		27-5428
Dial Pointer		56-1033
Disc (Tuning)		27-4766
Disc (Volume)		27-4765
Disc (Range Switch)		27-4787
Disc (Tone Control)		27-4764
Pilot Lamp Assembly	(Dial)	38-9694
Pilot Lamp Assembly	(Tabs)	38-9711
Pilot Lamp Assembly		38-9712

FIG. 1—Model 39-116 Part Locations Underside of Chassis

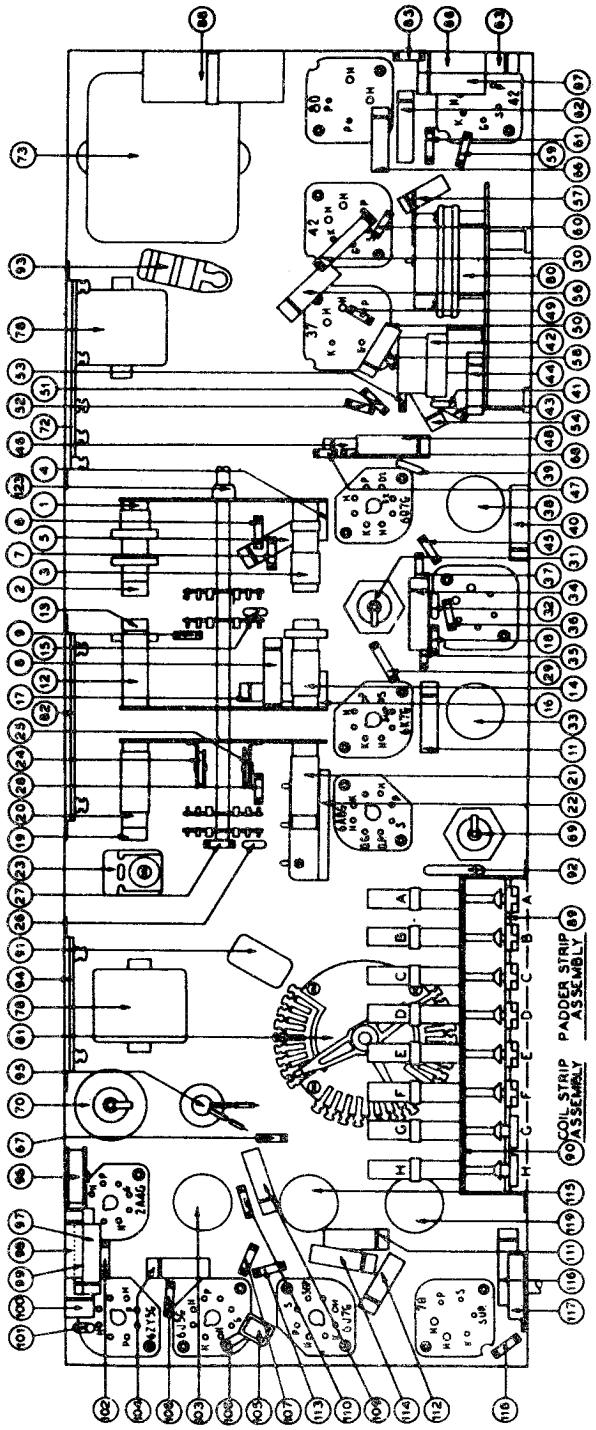

©John F. Rider, Publisher

MODELS 39-55,39-116
Specifications
"Mystery Control"
Adjustments

PHILCO RADIO & TELEV. CORP.

SPECIFICATIONS

Model 39-55

TYPE CIRCUIT: Philco Model 39-55, code 121, is an 11-tube receiver employing a superheterodyne circuit for reception of standard broadcast stations with Philco Mystery Control for Electric Automatic Tuning of eight (8) stations. The Philco Mystery Control also controls Volume and turns off set without any connections between receiver and Control Unit. In addition, other features of design are—Automatic Volume Control; Continuously Variable Tone Control; Bass Compensations; Degenerated Push-pull Pentode Audio Output Circuit, and Compensators selected for minimum drift.

POWER SUPPLY: 115 volts, 50 to 60 cycles, A.C.

POWER CONSUMPTION: 180 watt.

TUNING RANGES: 540 to 1720 K.C.

I.F. FREQUENCY: 470 K.C.

PHILCO TUBES USED: Receiver—6J8G, First Detector Oscillator; 78, I.F. Amplifier; 6Q7G, Second Detector, A.V.C. and first Audio; two (2) 42 Audio Output, and one 80 Rectifier.

Mystery Tuning Control Amplifier—78, First Control Amplifier; 6J7G, Second Control Amplifier; A.V.C.; 6ZY5G, A.V.C. and a 2A4G Thyratron Rectifier.

Mystery Control Unit—One type 30.

AUDIO OUTPUT: 10 watts.

CABINET DIMENSIONS:

	Height	*Width*	*Depth*
Console	38⅜"	29½"	14⅜"
Mystery Control	5½"	7¼"	9⅛"

Note: The Schematic Diagram and Replacement Parts List for Model 39-55 will be found in Bulletin 310 A.

Model 39-116

TYPE CIRCUIT: Philco Model 39-116, code 121, is a 14-tube receiver employing a superheterodyne circuit with three tuning ranges for reception of standard and short wave broadcast stations and Philco Mystery Control for Electric Automatic Tuning of eight (8) standard broadcast stations. The Philco Mystery Control also controls the volume and turns the set "off" without any connections between the receiver and control unit. In addition, other features of design are—Automatic Volume Control; Continuously Variable Tone Control; Bass Compensation Degenerated Push-pull Pentode Audio Output Circuit, and Compensators selected for minimum drift.

POWER SUPPLY: 115 volts, 50 to 60 cycles, A.C.

POWER CONSUMPTION: 190 watts.

TUNING RANGES: 540 to 1720 K.C.; 1.7 to 5.8 M.C.; 5.8 to 18 M.C.

I.F. FREQUENCY: 470 K.C.

PHILCO TUBES USED: Receiver—6K7G, R.F. Amplifier; 6A8G, First Detector Oscillator; 78, I.F. Amplifier; 6Q7G, Second Detector, A.V.C. and first Audio; 37, Phase Invertor; two (2) 42, Audio Output, and one 80, Rectifier.

Mystery Control Amplifier—78, First Control Amplifier; 6J7G, Second Control Amplifier; 6J5G, A.V.C.; 6ZY5G, and a 2A4G, Thyratron Rectifier.

Mystery Control Unit—One type 30.

AUDIO OUTPUT: 10 watts.

AERIAL AND GROUND: To obtain maximum performance from this receiver, the Philco Safety Aerial, Part No. 40-6370, should be used. The antenna circuit of this receiver is especially designed for use with this aerial. When installing the aerial, care should be taken to keep the aerial lead-in wire away from the horizontal inductor coil located in the bottom of the cabinet.

Do not coil up any excess lead-in and drop it in the back of the cabinet. Run the aerial lead-in directly to the "Ant" terminal post on the back of the receiver. A good ground connection should be connected to the terminal post marked "Gnd." When this is done, the link connecting to the "Gnd" terminal should be disconnected and swung around so that it does not touch the "Gnd" post. If, however, no ground is used this link should be connected to the "Gnd" terminal.

CABINET DIMENSIONS:

	Height	*Width*	*Depth*
Console	36⅜"	34⅝"	14¾"
Mystery Control	5½"	7¼"	9⅛"

Adjusting Mystery Control for Reception of Stations

The procedure for setting up stations on the Mystery Control receivers is similar to the procedure followed in setting up Philco Electric Automatic Tuning Models. The eight (8) stations, however, are automatically dialed by the remote control unit instead of by pushing buttons.

To set up stations on Mystery Tuning, proceed as follows:

1. Select and remove the desired eight (8) station call letters from the station tab card supplied with the receiver. Insert the station tabs in the apertures (windows) of the bezel. The lowest frequency station is placed in the first window on the left, and the remaining station tabs in the order of increasing frequency.
2. Connect a Model 077 Signal Generator to the "Ant" and "Gnd" terminals of the receiver, set the Signal Generator with modulation "On." Turn the range selector switch to "Broadcast" and tune in the lowest frequency station. This should be between 540 and 1030 K.C. Then adjust the Signal Generator to the frequency of the station until a beat note is heard.
3. Leaving the Signal Generator connected, turn the Range Selector Disc of the receiver to "Automatic." Now, using a padding screw driver, adjust the first 540 to 1030 K.C. oscillator padder (bottom row of holes) at the rear of the chassis, until the station identified by the modulated signal of the generator is tuned in to maximum signal. Next, adjust the first 540 to 1030 K.C. Antenna Padder (top row of holes) for maximum signal.
4. Turn the Signal Generator off the station frequency and readjust the "Ant" and "Osc" Padders for maximum output. This should be done with the volume control adjusted for low volume. This procedure is repeated for each of the remaining stations. The next station, of course, will be the next highest in frequency, that is within the 540 to 1030 K.C. range of the second set of padders. The Third Station is adjusted by the third set of padders under 670 to 1160 K.C. and the remaining stations in the order of increasing frequency.
5. Now, insert the small call letter tab of the first station in the third aperture of the bezel on the remote Mystery Control unit. Celluloid tabs are also supplied to be placed over each call letter. The remaining call letter tabs are then placed in the order of increasing frequency around the bezel from right to left (counter clockwise).
6. Insert the "loud" and "soft" tabs in the first and second apertures on the right hand side of the bezel. See instructions supplied with each model for dialing stations and controlling volume.

Copyright 1938, Philco Radio & Television Corp.

©John F. Rider, Publisher

©John F. Rider, Publisher

PIERSON-DE LANE CO.

MODELS PR15M, PR15R, PR15X
PR15C, PR15UH
Schematic, Data

Circuit Diagram and Operating Instructions for PR-15

CAUTION: Before connecting receiver, read the following instructions:

FIRST: Be sure voltage frequency indicated on the back panel of receiver corresponds to the power supply to be used. If in doubt, call your local power company.

SECOND: Be sure the speaker is plugged into the socket on rear panel. Connection may now be made to the power line.

Connect antenna to terminal marked "A" on panel. If a doublet antenna is used, connections of the two leads should be made to terminals "A" and "D." The jumper wire between terminals "D" and "G" may be either removed or left on, depending on which connection gives the best results on all bands in your particular location or your particular antenna.

If a ground wire is used, in many cases it may improve performance; in others it will be unnecessary. If a ground is used in conjunction with doublet antenna, in practically all cases, the jumper wire between "D" and "G" should be removed for best results.

To place in operation, set the front panel controls as follows:

Set crystal switch to "off" or center position.

Set phasing control at "1." It should always be left at this position when crystal is not in use.

Set communication switch to "receive" position (clockwise). Turn volume control to counter clockwise position.

Set band-change switch to number corresponding to number and frequency range on main dial face of band in which reception is desired.

Set manual control to extreme counter clockwise position. A distinct click will be heard as this control drops into the proper position.

Set beat oscillator switch to "off" position counter clockwise.

Set silencer switch to "off" position.

Set toggle switch, located on extreme right hand side of panel, with handle pointing up.

Next, turn tone control to extreme clockwise position, thus connecting the power to the receiver.

Receiver is now adjusted for normal broadcast, short wave broadcast, or voice reception with automatic volume control in action. Volume control may now be turned in clockwise direction to set volume at desired level.

Tuning of the broadcast band (1) will be best accomplished by use of the large center tuning control knob. The use of the handle on the large knob permits skipping from point to point on main dial with greatest ease. Accurate tuning is then accomplished by using the Vernier control. This control should always be used while tuning over small areas on any band either while searching for weak or distant stations or for tuning in stations of known frequency. Always tuning to exact center of carrier by tuning for the highest reading of "R" meter for a given station. Be sure at any change of the crystal setting to re-tune main dial owing to extreme selectivity.

BAND COVERAGE

BAND	— 1...	550 KC to	1700	KC
BAND	— 2...	1.7 MC to	5.5	MC
BAND	— 3...	5.5 MC to	12	MC
BAND	— 4...	11. MC to	22	MC
BAND	— 5...	18. MC to	40	MC

AVERAGE KC'S PER BAND SPREAD DEGREE

BAND	— 1	.3 KC
BAND	— 2	2.5 KC
BAND	— 3	5 KC
BAND	— 4	10 KC
BAND	— 5	20 KC

AVERAGE IMAGE RATIO

BAND	— 1	Above 6000 to 1
BAND	— 2	Above 3000 to 1
BAND	— 3	Above 2000 to 1
BAND	— 4	Above 1000 to 1
BAND	— 5	Above 600 to 1

PR-15 Models

PR-15-M
PR-15-R
PR-15-X
PR-15-C
PR-15-UH

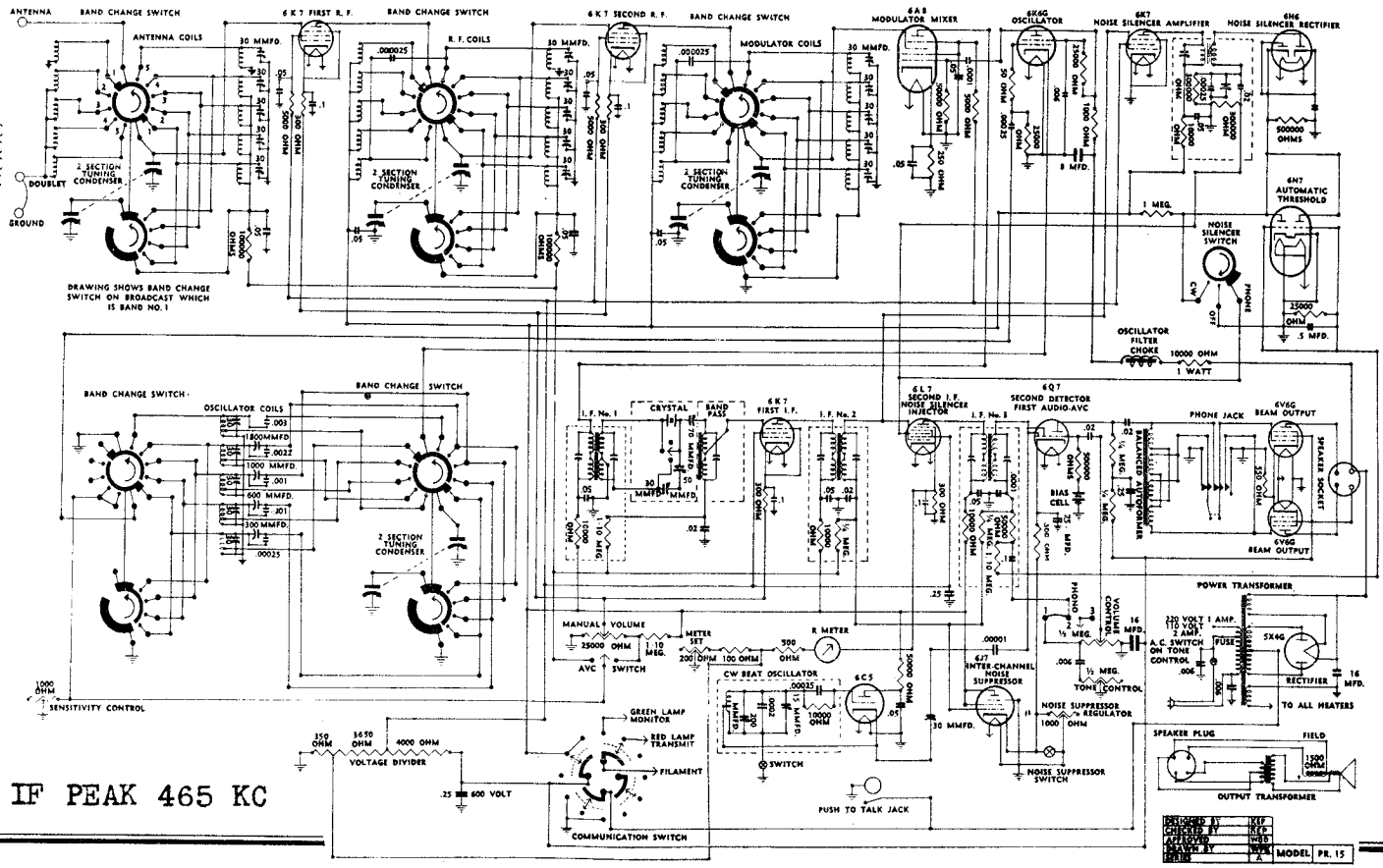

MODELS PR15M, PR15R, PR15X
PR15C, PR15UH
Trimmers, Socket

PIERSON-DE LANE CO.

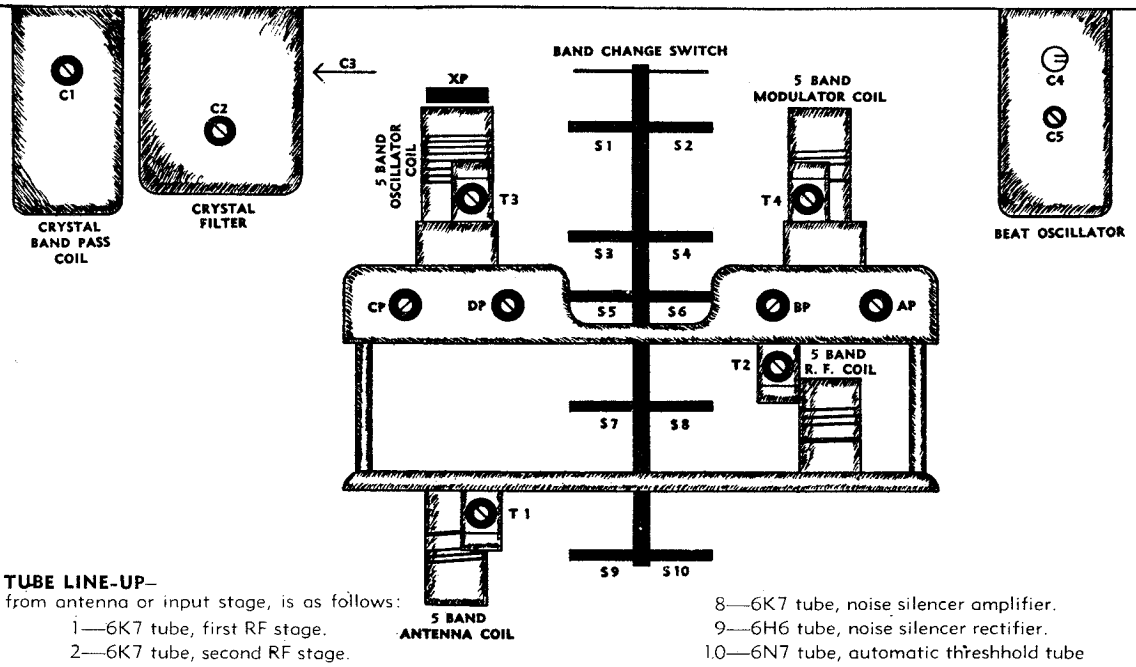

TUBE LINE-UP–
from antenna or input stage, is as follows:

1—6K7 tube, first RF stage.
2—6K7 tube, second RF stage.
3—6A8 tube, modulator or mixer tube.
4—6K6G tube, electron heterodyne oscillator.
5—6K7 tube, 1st IF stage.
6—6L7 tube, 2nd IF stage and noise silencer injector tube.
7—6Q7 tube, 2nd detector, AVC and 1st audio stage.
8—6K7 tube, noise silencer amplifier.
9—6H6 tube, noise silencer rectifier.
10—6N7 tube, automatic threshhold tube
11—6V6G tube, output tube (push-pull)
12—6V6G tube, output tube (push-pull)
13—6J7 tube, inter-channel noise suppression or relay tube
14—6C5 tube, CW beat oscillator tube.
15—5X4G tube, rectifier tube.

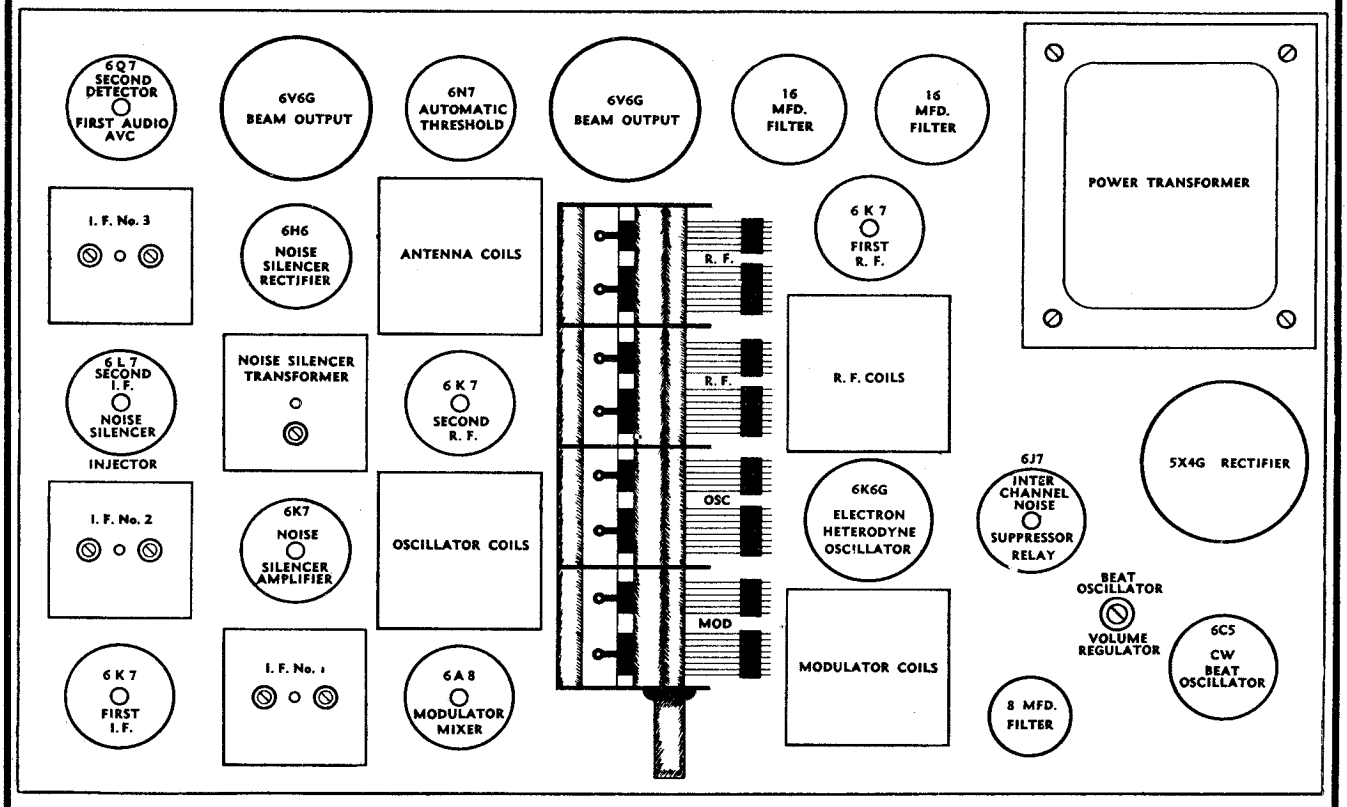

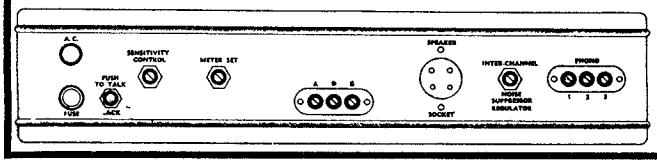

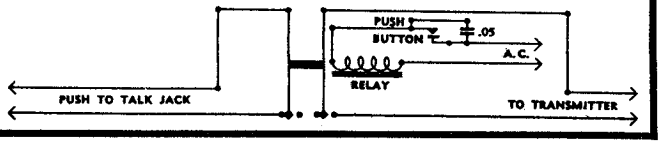

©John F. Rider, Publisher

MODELS PR15M,PR15R,PR15X
PR15C,PR15UH
Alignment,Oscillograms
Filter Data

PIERSON-DE LANE CO.

Fig 1

Fig. 2

Fig 3

Fig. 4

Fig. 5

Fig. 6

BAND PASS FILTER—The band pass feature is equipped with variable selectivity control, which permits continuously variable band width from approximately 10 KC to 2 KC Un-retouched oscillograms are shown above. Fig. 1 shows the minimum band width, while Figures 2 and 3 both show maximum band widths, but with different width screen sweep. The variable selectivity control permits setting of band width at any spot between these two points or widths; also the band pass feature has a rejection position, the oscillogram of which, is shown in Fig. 5. The vertical lines drawn over charts, except Fig. 3, indicate 10 KC per line. (On Fig. 3 the lines indicate 5 KC each to show flat top more plainly.) We highly recommend this filter to the phone man who must operate in the crowded amateur bands, and also to those DX'ers who require a high degree of selectivity plus high-fidelity. This type of filter also gives excellent single signal response for code work.

CRYSTAL FILTER—Two distinctly different types of crystal filters are built into the PR-15—one the **band pass type** intended primarily for use in phone work; the other the usual **series parallel** filter, which gives ideal performance for code work, but may also be used for phone reception.

SERIES PARALLEL FILTER—The series parallel filter is of the usual type with a high degree of efficiency. Fig. 4 shows the series position set at maximum selectivity. The selectivity shown may be decreased considerably by use of the phasing control. The Series Filter gives the ideal condition of noise reduction and selectivity for code reception. Fig. 5 and Fig. 6 show the selectivity when crystal is not in use.

IF ALIGNMENT:
Place receiver in normal operation on broadcast band as described on schematic page. Tune in a signal of about R6 strength with crystal filter placed in series position, preferably main dial set near 12 or 1300 KC. Set phasing control at 1, then tune station, using vernier drive to exact resonance, as indicated on R meter. Then carefully go over trimmers on IF transformers #1, 2 and 3, adjusting for highest reading on R meter. Go over them several times carefully checking to see that main tuning dial remains on exact resonance. Next adjust trimmer C1 as indicated in block diagram #1 for exact resonance, carefully rechecking trimmers on I F #1 (block diagram #2). C-1 is actually selectivity control for the crystal filter.

With careful adjustment practically any degree of selectivity may be obtained without loss of gain.

The injector control is included in the receiver, as indicated in marked circle. The tuning of this adjustment in clockwise direction will increase beat oscillator strength and vice versa.

Low reading of your R meter is caused by misalignment or poor alignment of I F's.

Do not attempt to adjust the noise silencer until after the IF alignment has been checked.

PARALLEL FILTER INSTRUCTIONS:.
The parallel filter position may be somewhat deceptive in that when it is first placed in operation there is no immediate apparent change.

It does not in any way affect the over-all selectivity nor does the phasing control have any apparent effect, However, for best operation it should be left at 1.

The crystal filter is intended for the separation or elimination of heterodyne where two carriers are involved. If more than two carriers are involved the series position should be used.

When two carriers are quite close together, producing a bad heterodyne, making either or both signals unreadable, it is quite possible to eliminate the heterodyne as well as either interfering station by placing the crystal switch to parallel position and tuning very, very slowly across the interfering frequencies.

Too much care cannot be used when tuning. As this is done two spots will be found in which one or the other of the interfering stations disappears almost completely; one spot for either station. However, a small amount of modulation hash may be still present from the average station.

©John F. Rider, Publisher

MODELS PR15M,PR15R,PR15X
PR15C,PR15UH
Noise Suppressor Notes

PIERSON-DE LANE CO.

NOISE SILENCER ADJUSTMENT: PR 15 Communications Receiver.

Refer to the three noise silencer tubes on the chassis layout 6U6, 6L7, 6L7. and silencer transformer. Any one of these three tubes may be defective, which would cause poor silencer operation, or it may be that the adjustment screw in the top of the noise silencer transformer has been knocked out in shipping.

The following is instruction for its proper adjustment: On the top of this can are two screw heads. However, if you will note carefully, one of the screw heads is soldered over so that a screw driver cannot be inserted. This screw should be disregarded. The one in which the screw driver may be placed is the actual adjustment screw. In making adjustments on this screw be sure to use a solid bakelite screw driver, preferably one without even a metal point. To adjust, place band switch on broadcast band, turn manual control to extreme counter-clockwise position to point which snaps to AVC. Next tune in a station whose strength does not exceed R5 on the meter, preferably one which registers around R5. The difficulties encountered in finding such a signal can be arrived at by using a very short antenna to control input. Next screw the adjustment screw mentioned above all the way down clock-wise (do not force.) Next set the silencer switch to CW position, then very slowly unscrew the silencer adjustment screw (using bakelite screwdriver) until a point is reached where the quality of reception becomes very bad. Then throw silencer switch to phone position and continue to unscrew the silencer adjustment, a fraction of a turn at a time, to the point where quality becomes bad, then set screw back in just far enough to clear up quality. Next, watching the R meter, throw the silencer switch rapidly back and forth from off to phone position. The meter should show about one-fourth of an R drop when the silencer is thrown to phone position. This will complete the silencer adjustment.

Failure to get results as indicated above, will undoubtedly indicate a faulty tube. In that case change the silencer tubes indicated on the chassis layout, one by one, rechecking adjustments after each tube has been changed.

The silencer amplifier, for proper operation, must be set at approximately 5 KC lower frequency than the IF channel frequency. Care should be exercised not to get the noise amplifier crossed over to the other side of the IF frequency as this would produce erratic operation.

In making all future adjustments be sure to screw the adjustment screw all the way down when starting, then back up slowly while adjusting to avoid the possibility of cross-over.

INTER-CHANNEL NOISE SUPPRESSION:

To properly adjust inter-channel noise suppression for your particular antenna and location the following procedure should be followed carefully:

First: Place all controls in position for normal broadcast reception band switch on band 1, described in our operating instructions. Place silencer switch in tone position, being sure the manual control is in the extreme counter-clockwise position. Next tune slowly across the broadcast band, noting particularly the spot at which the R meter reads the highest between stations.

When this spot has been located, set the main tuning dial in this series at this point and leave in this position during the remainder of the adjustment.

Next place inter-channel noise switch to "on" position - down.

Next set sensitivity control adjustment to point of highest R meter reading (maximum) and then adjust inter-channel suppression adjustment to point where noise of speaker ceases, with volume control about three fourths open (clockwise). If it is found the adjustment of this control does not seem effective, or does not quite remove all noise when adjusted to the extreme end, it will then be necessary to reduce sensitivity by adjustment to the point where noise ceases. This should be necessary only in locations where the noise level is extremely high. Next turn off noise silencer. A small amount of noise should be heard with the noise silencer in off position. The receiver is now in proper adjustment for inter-channel noise suppression. It may be operated without noise silencer if desired. The receiver will now play any station which is above the normal noise level. However, the noise level varies from hour to hour and from day to day in some locations. It may be necessary to check over a period of time to determine the best adjustment, or if desired a few preliminary checks as indicated by R meter readings between stations may be made, noting the time and position on dial at which the noise level is highest, then making the original adjustment for this location. Any change of antenna or location will very probably necessitate rechecking all adjustments.

Inter-Channel noise suppression is intended for use only on the broadcast band or for air craft or police stand-by work. It will be found unsatisfactory for use in short wave broadcast reception due to the great amount of fading encountered in practically all short wave stations. (Do not attempt to use inter-channel noise suppression with the manual control beyond the "off" counter-clockwise position.) Failure to get results as indicated above may be caused either by a faulty 6Q7 or 6J7 tube. See chassis layout for position of these tubes as well as adjustments indicated above.

MONITOR:

In placing the monitor in operation it should be borne in mind that it is no different than the usual monitor with which every amateur is familiar, consisting primarily of the usual signal rectifier and in the case of the PR-15 the addition of the audio amplifier. In handling diod rectifier for this purpose it is necessary to obtain the right amount of RF voltage input; too little produces no signal while too much may result in blocking of the rectifier. The amount of RF which may be fed into the receiver may vary greatly with different transmitter installations.

While the circuit will ordinarily handle a wide variation in input voltage in many cases, the voltage may either be too small or far in excess of the necessary amount, consequently failure of the monitor can be caused only by one of two things, either too much RF or not enough RF. If the case is too much RF it can usually be readily determined by the R meter. If the quality is bad or no signal is heard at all the R meter may show a reading of anywhere from R1 to R9 plus when the transmitter is turned on. Inasmuch as the R meter reading is produced purely by rectified RF it is a direct indication.

If such is the case the operator should first look to his line filtering. It may be that a large quantity of RF is coming in on the AC line or that it is being directly picked up by the receiving antenna. A short direct ground wire should first be connected to chassis ground on receiver; if this fails to bring the R meter down it may then be necessary to disconnect or ground the receiving antenna while monitoring. If both of the above fail to bring the R meter down and produce good monitoring it may then be necessary to install a good line filter well grounded in the AC line to the receiver.

If no R meter reading is obtained when transmitter is turned on and no signal is heard it is probable that the case is too little RF. This will apply particularly to low powered transmitters. If such is the case it probably will be necessary to connect one end of a 25 or 30 micromicrofared condenser to either terminal numbers one or two of phone terminals on back chassis panel. The other end of the condenser should be connected to a small antenna. This may be only three or four feet long and should be just long enough to give good monitoring. In the case of a very low powered transmitter it may be necessary to run this lead close to the transmitting antenna lead-in or final plate tank to get sufficient pick-up.

©John F. Rider, Publisher

PILGRIM ELECTRIC CORP.

MODELS DA, DAE
MODELS DB, DF
MODEL 210
Schematics

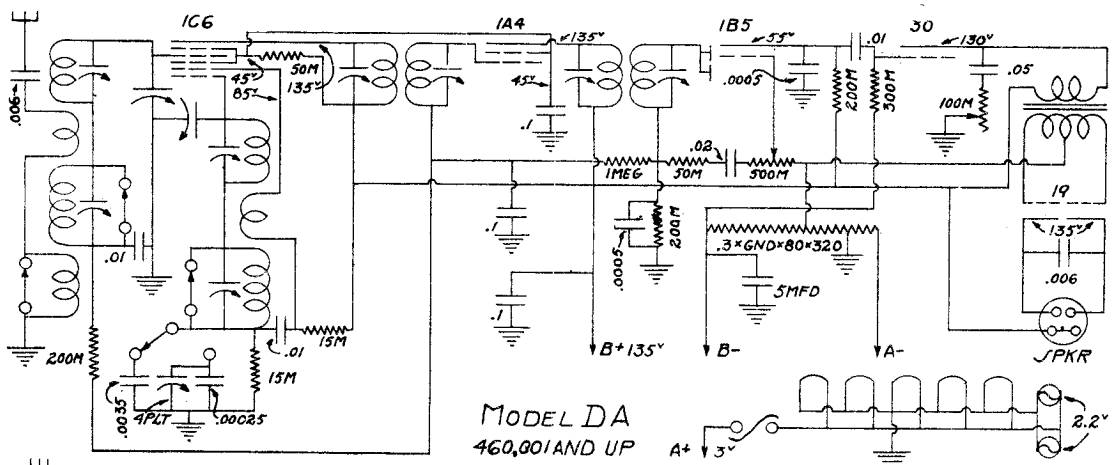

IF PEAK 456 KC

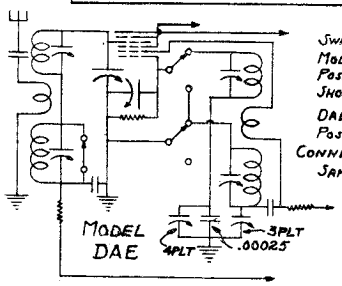

SWITCHES SHOWN ON MODEL DA IN S.W. POSITION. SWITCHES SHOWN ON MODEL DAE IN BROADCAST POSITION. ALL OTHER CONNECTIONS ON DAE SAME AS DA.

MODEL 210 MAGNETIC
AC-DC TRF RECEIVER

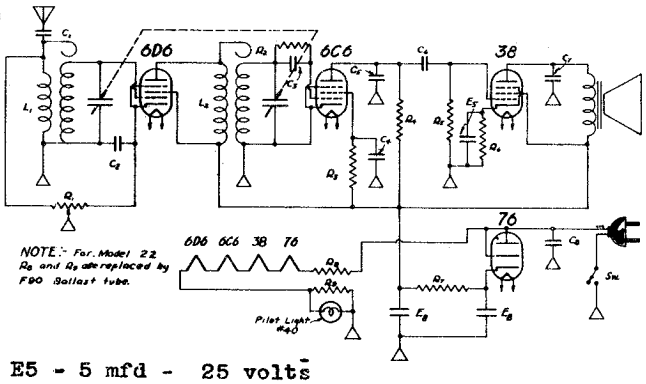

R1	25,000 ohm	VOL.CONT.	
R2	3,000,000	"	½ watt
R3	6,000,000	"	" "
R4	1,000,000	"	" "
R5	750,000	"	" "
R6	1,000	"	" "
R7	800	"	1 watt
R8	275	"	line cord
R9	25	"	2 watt

C1	.005	mfd-	400 Volt
C2	.1	"	- 200 "
C3	.005	"	- 400 "
C4	.1	"	- 200 "
C5	.0001	"	- mica
C6	.02	"	- 400 Volt
C7	.006	"	- 400 "
C8	.05	"	- 400 "

E5 - 5 mfd - 25 volts
E8 - 8 mfd - 150 volts
E8 - 8 mfd - 150 volts

L1 - Antenna coil
L2 - R.F.Coil

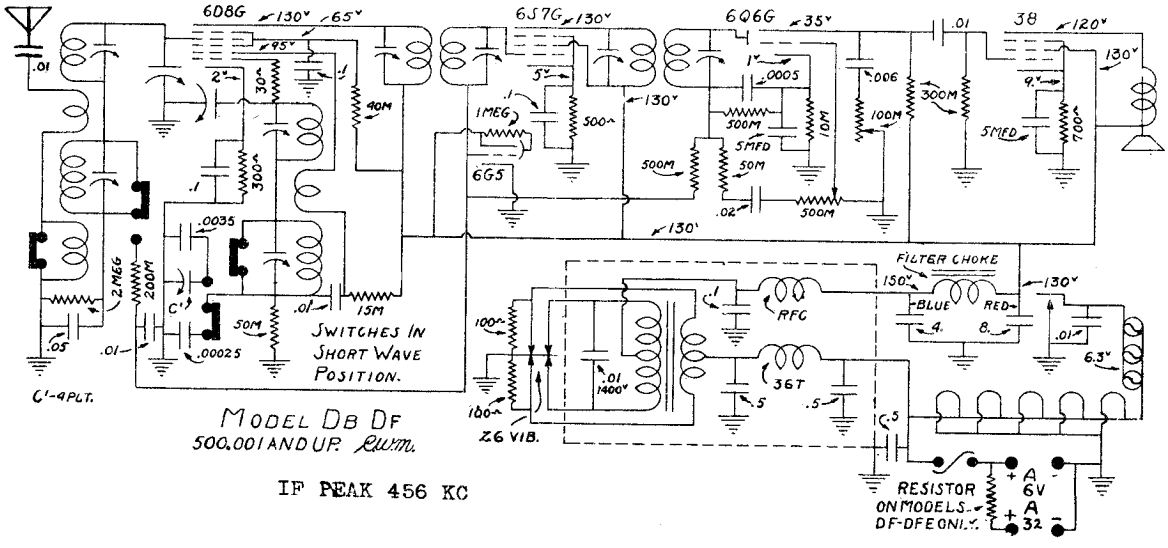

IF PEAK 456 KC

©John F. Rider, Publisher

MODELS 313,314
MODELS 713,714,753,754
Schematics

PILGRIM ELECTRIC CORP.

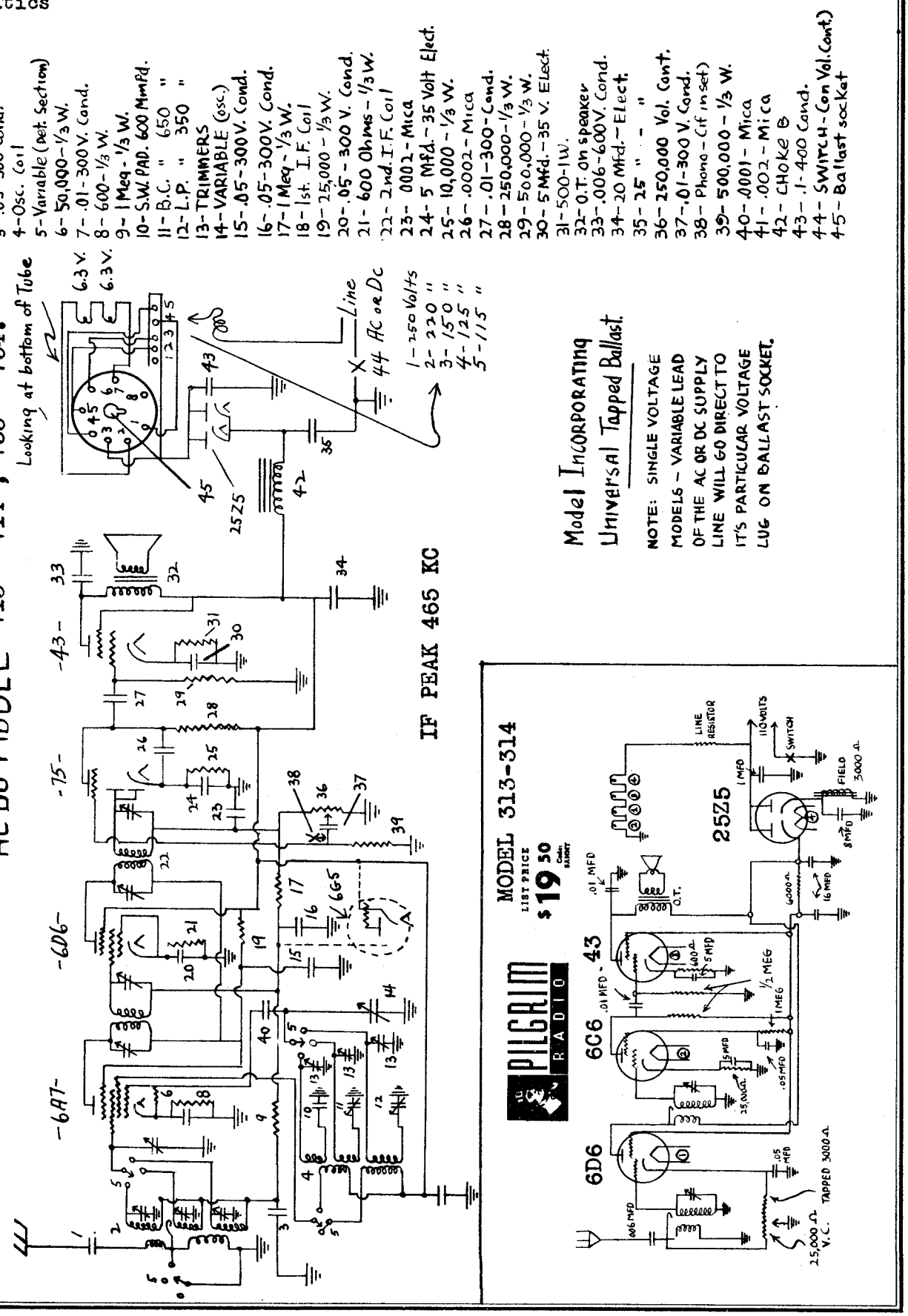

©John F. Rider, Publisher

PILOT RADIO CORP.

MODEL X 201
Schematic, Socket
Trimmers, Chassis
Parts

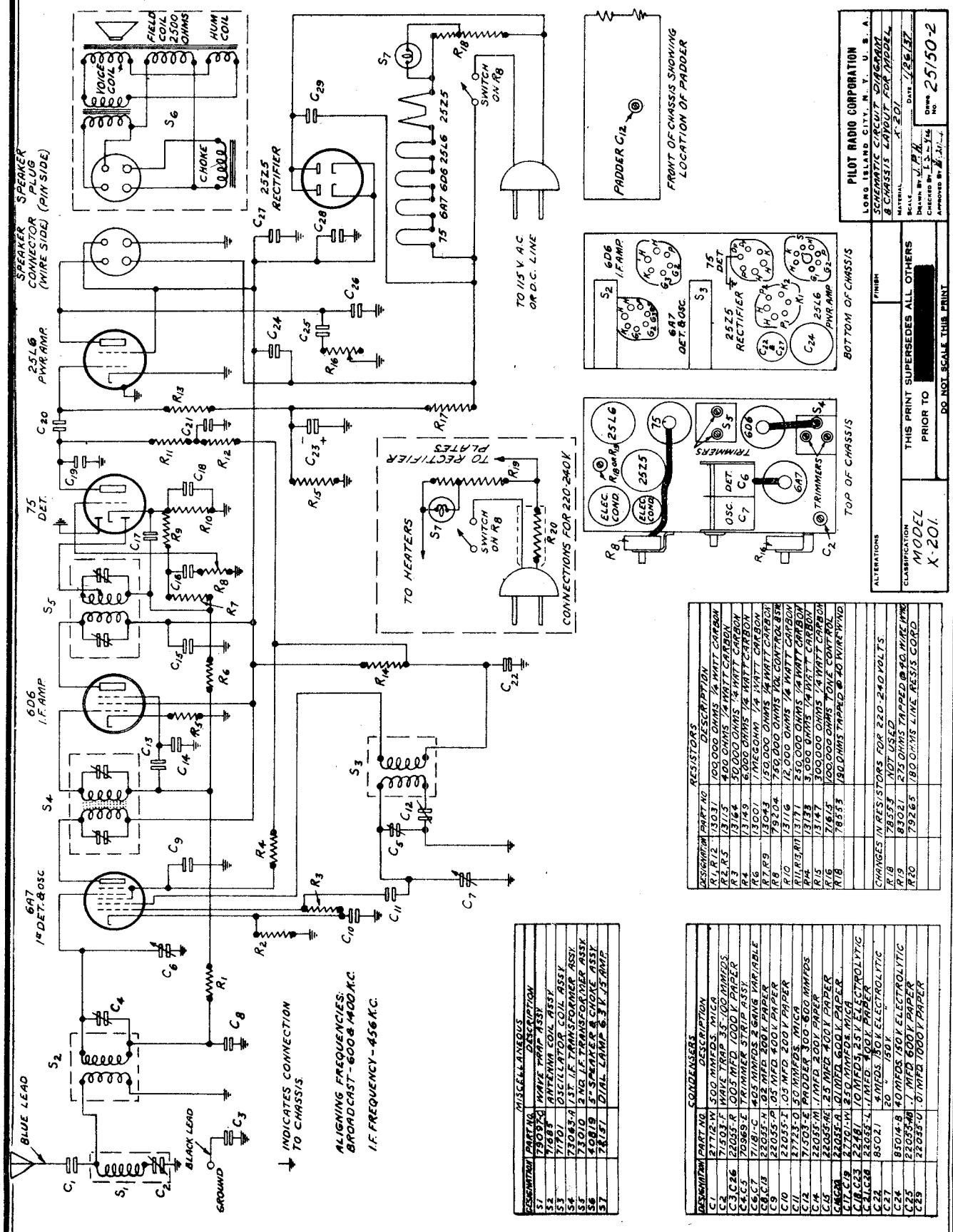

DESIGNATION	PART NO.	DESCRIPTION
S1	79097	WAVE TRAP ASSY.
S2	71685	ANTENNA COIL ASSY.
S3	71701	OSCILLATOR COIL ASSY.
S4	73063-A	1ST I.F. TRANSFORMER ASSY.
S5	73010	2ND I.F. TRANSFORMER ASSY.
S6	40819	5" SPEAKER & CHOKE ASSY.
S7	78151	DIAL LAMP 6.3 V. .3 AMP.

DESIGNATION	PART NO.	DESCRIPTION
C1	27712-M	500 MMFDS. MICA
C2	71503-F	WAVE TRAP 35-1100 MMFDS.
C3,C26	22035-R	.005 MFD. 1000 V. PAPER
C4,C5	70969-E	TRIMMER STRIP ASSY.
C6,C7	71811-C	405 MMFDS. 2 GANG VARIABLE
C8,C18	22035-H	.02 MFD. 200 V. PAPER
C9,C15	22035-P	.05 MFD. 400 V. PAPER
C10	22035-I	.05 MFD. 200 V. PAPER
C11	27733-D	50 MMFDS. MICA
C12	71503-E	PADDER 300-600 MMFDS.
C14	22035-M	.1 MFD. 200 V. PAPER
C15	22035-R	.25 MFD. 400 V. PAPER
C16,C24	22035-A	.01 MFD. 600 V. PAPER
C17,C19	22701-W	250 MMFDS. MICA
C18,C23	22481	10 MFDS. 25 V. ELECTROLYTIC
C21,C28	22035-L	.1 MFD. 400 V. PAPER
C22	83021	4 MFDS. 150 V. ELECTROLYTIC 20 " 150 V.
C27		
C24	83014-B	40 MFDS. 150 V. ELECTROLYTIC
C25	22035-N	.1 MFD. 600 V. PAPER
C29	22035-U	.01 MFD. 1000 V. PAPER

DESIGNATION	PART NO.	DESCRIPTION
R1,R12	13051	100,000 OHMS 1/4 WATT CARBON
R2,R5	13154	400 OHMS 1/4 WATT CARBON
R3	13164	30,000 OHMS 1/4 WATT CARBON
R4	13149	6,000 OHMS 1/4 WATT CARBON
R6	13001	1 MEGOHM 1/4 WATT CARBON
R7,R9	13043	150,000 OHMS 1/4 WATT CARBON
R8	79204	750,000 OHMS VOL CONTROL ASS'M
R10	13116	12,000 OHMS 1/4 WATT CARBON
R11,R13,R17	13171	250,000 OHMS 1/4 WATT CARBON
R14	13133	3,000 OHMS 1/4 WATT CARBON
R15	13147	300,000 OHMS 1/4 WATT CARBON
R16	78115	100,000 OHMS TONE CONTROL
R18	78553	130 OHMS TAPPED @ 40 WIRE WND
CHANGES IN RESISTORS FOR 220-240 VOLTS		
R18	78553	NOT USED
R19	83021	275 OHMS TAPPED @ 40 WIRE WND
R20	79265	180 OHMS LINE RESIS. CORD

DESIGNATION	PART NO.	DESCRIPTION
L1	71504-A	ANTENNA COIL
L2	71504-B	OSCILLATOR COIL
L3	71504-C	1ST I.F. TRANSFORMER
L4	71504-D	2ND I.F. TRANSFORMER
L5	71504-E	SPEAKER & CHOKE
L6	71504-F	WAVE TRAP

PILOT RADIO CORPORATION
LONG ISLAND CITY, N.Y. U.S.A.
SCHEMATIC CIRCUIT DIAGRAM & CHASSIS LAYOUT FOR MODEL X-201
MATERIAL — SCALE — DATE 1/26/37
DRAWN BY L.P.R. — CHECKED BY L.J.Y. — APPROVED BY W.H.
DRWG NO 25150-2

ALTERATIONS — FINISH

CLASSIFICATION MODEL X-201.

THIS PRINT SUPERSEDES ALL OTHERS PRIOR TO [redacted]

DO NOT SCALE THIS PRINT

©John F. Rider, Publisher

MODEL X 201
Voltage,Alignment
MODELS G352,G353
Voltage,Alignment

PILOT RADIO CORP.

MODEL X-201 SUPERHETERODYNE

Range: 176-557 Meters (1,710-538 kc.)

Line Voltage: 115-125 volts, A.C. or D.C.
Power Consumption: 45 watts.
Undistorted Power Output: 2 watt.
Intermediate Frequency: 456 kc.
Tube Functions: 6A7 electron emission control, oscillator-detector.
6D6 I.F. amplifier.
75 amplifier detector.
25L6 Class A power pentode.
25Z5 rectifier

Voltages: Read tube socket voltages with meter having resistance of at least 1,000 ohms per volt. All voltages measured to chassis.

Type	6A7	6D6	75	25L6	25Z5
Plate	100	100	—*	90	—
Cathode	3	3.8	1.	0	100
Screen	64	100	—	100	—
Heater	6.3	6.3	6.3	25	25

*Voltage measured through plate resistor.
Speaker field voltage, 115 volts.
Anode grid of 6A7, 85 volts.

REALIGNMENT: Should the receiver require realignment, the procedure outlined below should be followed. In the service information sheet, the location and function of the various alignment capacitors are clearly illustrated. For best results an external modulated oscillator with adequate frequency range, and a visual output meter, should be used.

Before connecting the chassis to the power line, reconnect the speaker cable in its socket at the rear of the speaker.

I. F. ALIGNMENT: When aligning the Intermediate Frequency Amplifier, the external oscillator must be set at 456 kc. The Band Switch should be in the position marked "Broadcast", and the tuning condenser should be set at maximum capacity. Connect the "antenna" lead of the external oscillator to the control grid of the type 6D6 tube in the I.F. Amplifier stage through a .1 mfd. fixed condenser. Connect the "ground" lead of the external oscillator to the receiver ground lead. The I.F. alignment capacitors are located at the top of the shielded I.F. Transformers. Rotate the adjusting screw of each capacitor on I.F. Unit No. 2 slowly until maximum output is noted. On completion of this operation, remove the external oscillator leads from the type 6D6 I.F. Amplifier tube and connect it in the same manner to the control grid at the top of the type 6A7 tube.

Now rotate each adjustment screw on I.F. Unit No. 1 for maximum output. During these operations, use the least possible input to prevent broadening of the resonance peaks.

In order to obtain the most accurate realignment of the I.F. Amplifier, it is essential to repeat the alignment process in both I.F. units with the external oscillator leads connected across the control grid of the 6A7 tube.

WAVE TRAP ADJUSTMENT: With the oscillator still set at 456 kc., connect the oscillator to the antenna through a 200 mmfd. condenser. Then adjust the wave trap condenser for minimum deflection on the output meter.

BROADCAST ALIGNMENT: After the wave trap is adjusted, place the tuning control pointer at the 1400 kc. mark. Adjust the broadcast band oscillator trimmer to maximum response. Adjust the detector trimmer in the same manner.

Next adjust the 600 kc. padder condenser. Set the external oscillator at 600 kc. Rotate the receiver tuning control until resonance is indicated. Then rock the tuning control back and forth about this resonance position, and at the same time adjust the padder condenser for the highest resonance peak.

Now repeat the 1400 kc. trimmer adjustment, following in every detail the procedure previously described.

Connect the blue wire at the rear of the chassis to your antenna and the black wire to the ground. If you are not experienced in erecting antennas, we strongly advise having this done by your radio service man. If you use an ordinary single-wire antenna, put up a single wire 50 to 100 ft. long, and as high above surrounding objects as possible, bringing a lead from the nearer end down to your set. For best reception, however, use a Pilot DX10 Antenna.

MODEL G-352 SUPERHETERODYNE

Range: 16-52 Meters (18,800-5,700 kc.)
178-550 Meters (1,680-545 kc.)

MODEL G-353 SUPERHETERODYNE

Range: 178-550 Meters (1,680-545 kc.)
789-2,142 Meters (380-140 kc.)

(Available for sale outside of North America)

Line Voltage: 115-125 volts, A.C. or D.C.
Power Consumption: 45 watts.
Undistorted Power Output: 2 watt.
Intermediate Frequency: 456 kc.
Tube Functions: 6A7 electron emission control, oscillator-detector.
6D6 I.F. amplifier.
75 amplifier detector.
25L6 Class A power pentode.
25Z5 rectifier

Voltages: Read tube socket voltages with meter having resistance of at least 1,000 ohms per volt. All voltages measured to chassis.

Type	6A7	6D6	75	25L6	25Z5
Plate	100	100	—*	90	—
Cathode	3	3.8	1.	0	100
Screen	64	100	—	100	—
Heater	6.3	6.3	6.3	25	25

*Voltage measured through plate resistor.
Speaker field voltage, 115 volts.
Anode grid of 6A7, 85 volts.

REALIGNMENT: Should the receiver require realignment, the outlined procedure below should be followed. In the service information sheet, the location and function of the various alignment capacitors are clearly illustrated. For best results an external modulated oscillator with adequate frequency range, and a visual output meter, should be used.

Before connecting the chassis to the power line, reconnect the speaker cable in its socket at the rear of the speaker.

I. F. ALIGNMENT: When aligning the Intermediate Frequency Amplifier, the external oscillator must be set at 456 kc. The Band Switch should be in the position marked "Broadcast", and the tuning condenser should be set at maximum capacity. Connect the "antenna" lead of the external oscillator to the control grid of the type 6D6 tube in the I.F. Amplifier stage through a .1 mfd. fixed condenser. Connect the "ground" lead of the external oscillator to the receiver ground lead. The I.F. alignment capacitors are located at the top of the shielded I.F. Transformers. Rotate the adjusting screw of each capacitor on I.F. Unit No. 2 slowly until maximum output is noted. On completion of this operation, remove the external oscillator leads from the type 6D6 I.F. Amplifier tube and connect it in the same manner to the control grid at the top of the type 6A7 tube.

Now rotate each adjustment screw on I.F. Unit No. 1 for maximum output. During these operations, use the least possible input to prevent broadening of the resonance peaks.

In order to obtain the most accurate realignment of the I.F. Amplifier, it is essential to repeat the alignment process in both I.F. units with the external oscillator leads connected across the control grid of the 6A7 tube.

WAVE TRAP ADJUSTMENT: With the oscillator still set at 456 kc., connect the oscillator to the antenna through a 200 mmfd. condenser. Then adjust the wave trap condenser for minimum deflection on the output meter.

BROADCAST ALIGNMENT: After the I.F. amplifier is completely realigned, connect the external oscillator leads to the receiver antenna and ground leads with a .0002 mfd. condenser in the antenna lead. Set the Band Switch in the "Broadcast" position and place the tuning control pointer at the 1400 kc. mark. Adjust the broadcast band oscillator trimmer to maximum response. Adjust the signal section trimmer in the same manner.

Next adjust the 600 kc. padder condenser. Set the external oscillator at 600 kc. Rotate the receiver tuning control until resonance is indicated. Then rock the tuning control back and forth about this resonance position, and at the same time adjust the padder condenser for the highest resonance peak.

Now repeat the 1400 kc. trimmer adjustment, following in every detail the procedure previously described.

SHORT-WAVE ALIGNMENT: The procedure in aligning the short-wave bands is identical with that for the broadcast with the exception of the adjustment of the padder condenser. The alignment frequency is 16.8 Meters—(17,800 kc.) Turn the Band Switch to the right. Tune the external oscillator to 16.8 meters. Tune the receiver so that the dial pointer is in a position coincidental with the 16.8 meter indication on the dial scale. Adjust the short wave oscillator trimmer for maximum response. Next adjust the signal circuit trimmer for maximum resonance. Repeat all adjustments to assure correct alignment, rocking the gang condenser to right or left for maximum gain.

THE LONG WAVE ALIGNMENT: Procedure in the Model is similar to the Broadcast section of that receiver. Align at 375 kc. Adjust the padder at 160 kc.

Should it be necessary to remove the band switch assembly, it is advisable to realign the receiver after reinstalling.

©John F. Rider, Publisher

MODEL G 284
Schematic, Parts

PILOT RADIO CORP.

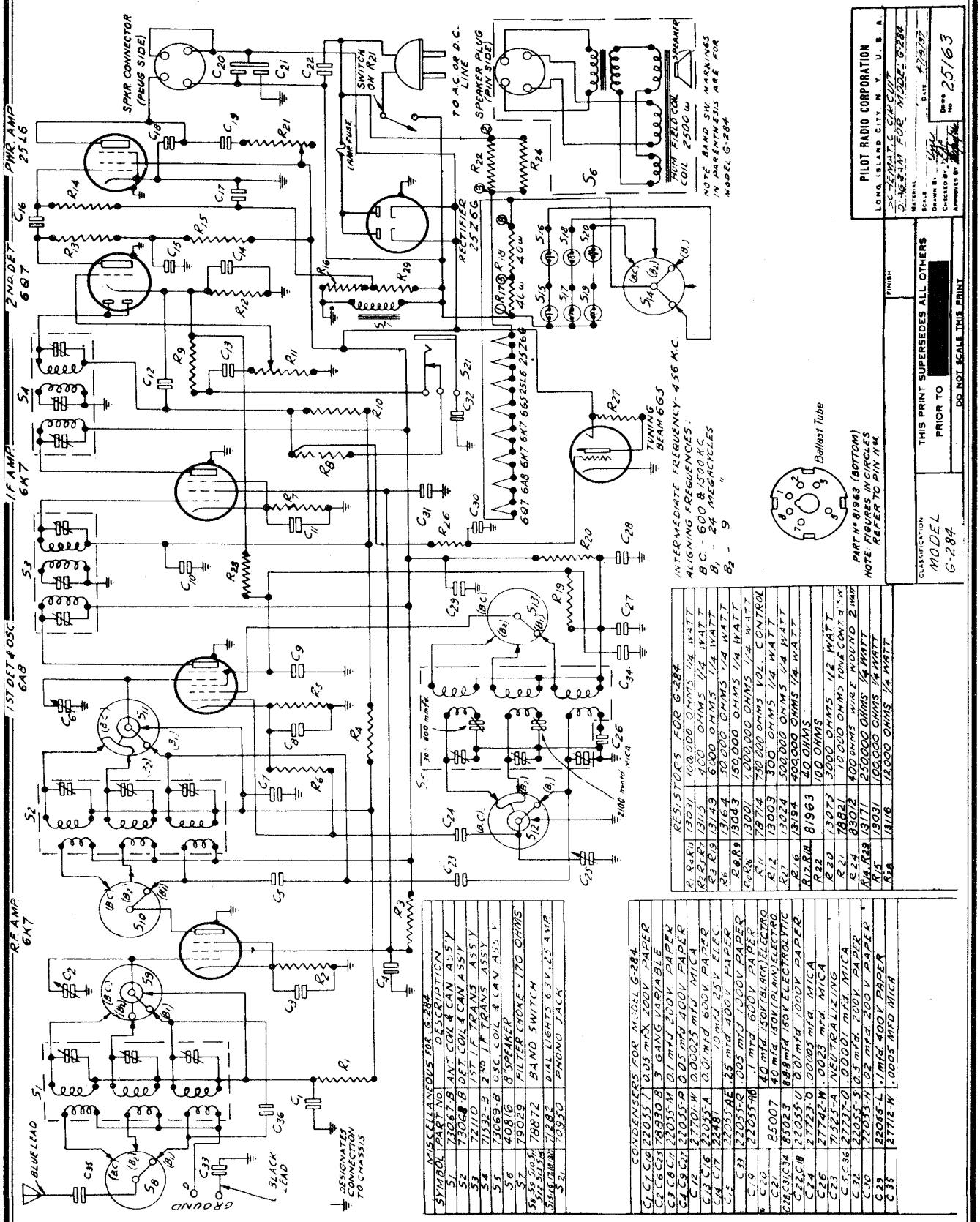

MISCELLANEOUS FOR G-284		
SYMBOL	PART NO	DESCRIPTION
S1	73067-B	ANT. COIL & CAN ASS'Y
S2	73068-B	DET. COIL & CAN ASS'Y
S3	72110	1ST I.F. TRANS ASS'Y
S4	71532-B	2ND I.F. TRANS ASS'Y
S5	73069-B	OSC. COIL & CAN ASS'Y
S6	40816	8" SPEAKER
S7	79029	FILTER CHOKE - 170 OHMS
S8, S9, S10, S11, S12, S13, S14	78872	BAND SWITCH
S15, S16, S17, S18, S19	71282	DIAL LIGHTS 6.3V, .25 AMP.
S21	70950	PHONO JACK

CONDENSERS FOR MODEL G-284		
C1, C7, C10	22055-I	0.05 mfd. 200V PAPER
C2, C6, C25	78830-B	3 GANG VARIABLE
C3, C8, C11	22055-M	0.1 mfd. 200V PAPER
C4, C9, C22	22055-P	0.05 mfd. 400V PAPER
C12	27701-W	0.00025 mfd. MICA
C13, C16	22055-A	0.01 mfd. 600V PAPER
C14, C17	22481	10 mfd. 25V ELEC.
C15	22055-AE	.25 mfd. 400V PAPER
C33	22055-R	.005 mfd. 1000V PAPER
C19	22055-AB	.1 mfd. 600V PAPER
C20	85007	40 mfd. 150V (BLACK) ELECTRO.
C21		40 mfd. 150V (PLAIN) ELECTRO.
C28, C31, C34	85023	8-8-8 mfd. 150V ELECTROLYTIC
C22, C18	22055-U	0.01 mfd. 1000V PAPER
C24	27723-O	.00005 mfd. MICA
C26	27742-W	.0023 mfd. MICA
C23	71525-A	NEUTRALIZING
C5, C36	27737-O	.00001 mfd. MICA
C32	22055-S	0.5 mfd. 200V PAPER
C30	22055-H	.02 mfd. 200V PAPER
C29	22055-L	.1 mfd. 400V PAPER
C35	27712-W	.0005 MFD. MICA

RESISTORS FOR G-284		
R1, R4, R13	13031	100,000 OHMS 1/4 WATT
R2, R5, R7	13115	400 OHMS 1/4 WATT
R3, R19	13149	6000 OHMS 1/4 WATT
R6	13164	50,000 OHMS 1/4 WATT
R8, R9	13043	150,000 OHMS 1/4 WATT
R10, R16	13001	1,000,000 OHMS 1/4 WATT
R11	78714	750,000 OHMS VOL. CONTROL
R12	13003	300 OHMS 1/4 WATT
R17	13024	500,000 OHMS 1/4 WATT
R16	13194	400,000 OHMS 1/4 WATT
R17, R18	81963	40 OHMS
R22	13073	3000 OHMS 1/2 WATT
R20	78821	10,000 OHMS TONE CONT. & SW
R24	83012	400 OHMS WIRE WOUND 2 WATT
R14, R29	13171	250,000 OHMS 1/4 WATT
R15	13031	100,000 OHMS 1/4 WATT
R28	13116	12,000 OHMS 1/4 WATT

©John F. Rider, Publisher

MODEL G 284
Alignment
Notes

PILOT RADIO CO.

Tranex AC-DC Model G-284, for 110-125 V. (50-60 Cycles)

Three tuning bands covering 12-94 m. (25,000-3,200 kc.) and 187-560 m. (1,600-535 kc.)

REMOVAL OF CHASSIS FROM CABINET:

To remove the chassis from the cabinet proceed as follows:

Be certain that the line cord is removed from the power outlet socket.

Remove the "slip-on" knobs and felt washers from the controls and loosen the set screw on the tuning knob.

Remove the speaker plug from its socket.

Remove the four mounting screws, located underneath the cabinet.

Remove the tuning beam plug from the socket at the front of the chassis.

REALIGNMENT: Should the receiver require realignment, the procedure outlined below should be followed. For best results an external modulated oscillator with adequate frequency range, and a visual output meter, should be used.

Before connecting the chassis to the power line, reconnect the speaker cable in its socket at the rear of the chassis.

The R. F. alignment trimmer condensers are mounted on the side of the coil shields.

I. F. ALIGNMENT: When aligning the Intermediate Frequency Amplifier, the external oscillator must be set at 456 kc. The Band Selector Switch should be in the position marked "Broadcast", and the tuning condenser should be set at maximum capacity. Connect the "antenna" lead of the external oscillator to the control grid of the type 6K7 tube in the I. F. Amplifier stage through a .1 mfd. fixed condenser. Connect the "ground" lead of the external oscillator to the receiver ground lead. The I. F. alignment capacitors are located at the side of the shielded I. F. Transformers. Rotate the adjusting screw of each capacitor on I. F. Unit No. 2 slowly until maximum output is noted. On completion of this operation, remove the external oscillator lead from the type 6K7 I. F. amplifier tube and connect it in the same manner to the control grid at the top of the type 6A8 tube.

Now rotate each adjustment screw on I. F. Unit No. 1 for maximum output. During these operations, use the least possible input to prevent broadening of the resonance peaks.

In order to obtain the most accurate realignment of the I. F. amplifier, it is essential to repeat the alignment process in both I. F. Units.

CAUTION: When making repairs on the receiver, use only ROSIN CORE SOLDER. NEVER USE SOLDERING PASTE OR ACID FLUXES OF ANY TYPE.

BROADCAST ALIGNMENT: After the I. F. amplifier is completely realigned, connect the external oscillator leads to the receiver antenna and ground leads. Insert a 200 mmf. condenser in series with the antenna lead. Set the Band Selector Switch in the "Broadcast" position and place the tuning control pointer at the 1500 kc. mark. Adjust the broadcast band oscillator trimmer.

Next adjust the interstage alignment trimmer for maximum response. Finally adjust the antenna section trimmer in the same manner.

Next adjust the 600 kc. padder condenser, located on the top of the oscillator coil. Set the external oscillator at 600 kc. Rotate the receiver tuning control until resonance is indicated. Then rock the tuning control back and forth about this resonance position, and at the same time adjust the padder condenser for the highest resonance peak.

Now repeat the 1500 kc. trimmer adjustment, following in every detail the procedure previously described.

ALIGNMENT OF THE SHORT WAVE-BANDS:— The procedure in aligning the short wave-bands is identical with that for the broadcast with the exception of the adjustment of the padder condenser. Insert a 400 ohm non-inductive resistor in series with the antenna lead. The alignment frequencies are as follows:

Band 2: 31.6 Meters—(9,500 kc.)
Band 1: 12.5 Meters—(24,000 kc.)

When aligning Band 2, set the Band Selector Switch in the position marked "Band 2". Set the tuning control pointer at 9,500 kc. meters. Adjust the oscillator alignment capacitor on Band 2 for maximum output. Next adjust the interstage and antenna section alignment capacitors for maximum output.

To align Band 1, set the Band Selector Switch in the position marked "Band 1". Set the tuning control pointer at the 24,000 kc. meter mark. Set the external oscillator at 24,000 kc. meters. Adjust the oscillator section alignment capacitor on Band 1 for maximum output.

Proceed next to align the interstage section of Band 1. In doing this, it is essential to rock the tuning control back and forth about the resonance position and at the same time to adjust the trimmer for the highest resonance peak. Next align the antenna section for maximum sensitivity.

ANTENNA

If you use an ordinary single-wire antenna, connect the antenna to the blue lead on the set. Connect both the black and yellow leads to the ground, or connect the yellow lead to the ground and leave the black lead free—whichever gives better reception.

PHONOGRAPH PICK-UP: A jack is provided at the rear of the chassis for plugging in an electric phonograph pick-up, in order that records can be reproduced by the loudspeaker, through the high-quality amplifier with which this set is equipped. The pick-up should be of the high-impedance type.

©John F. Rider, Publisher

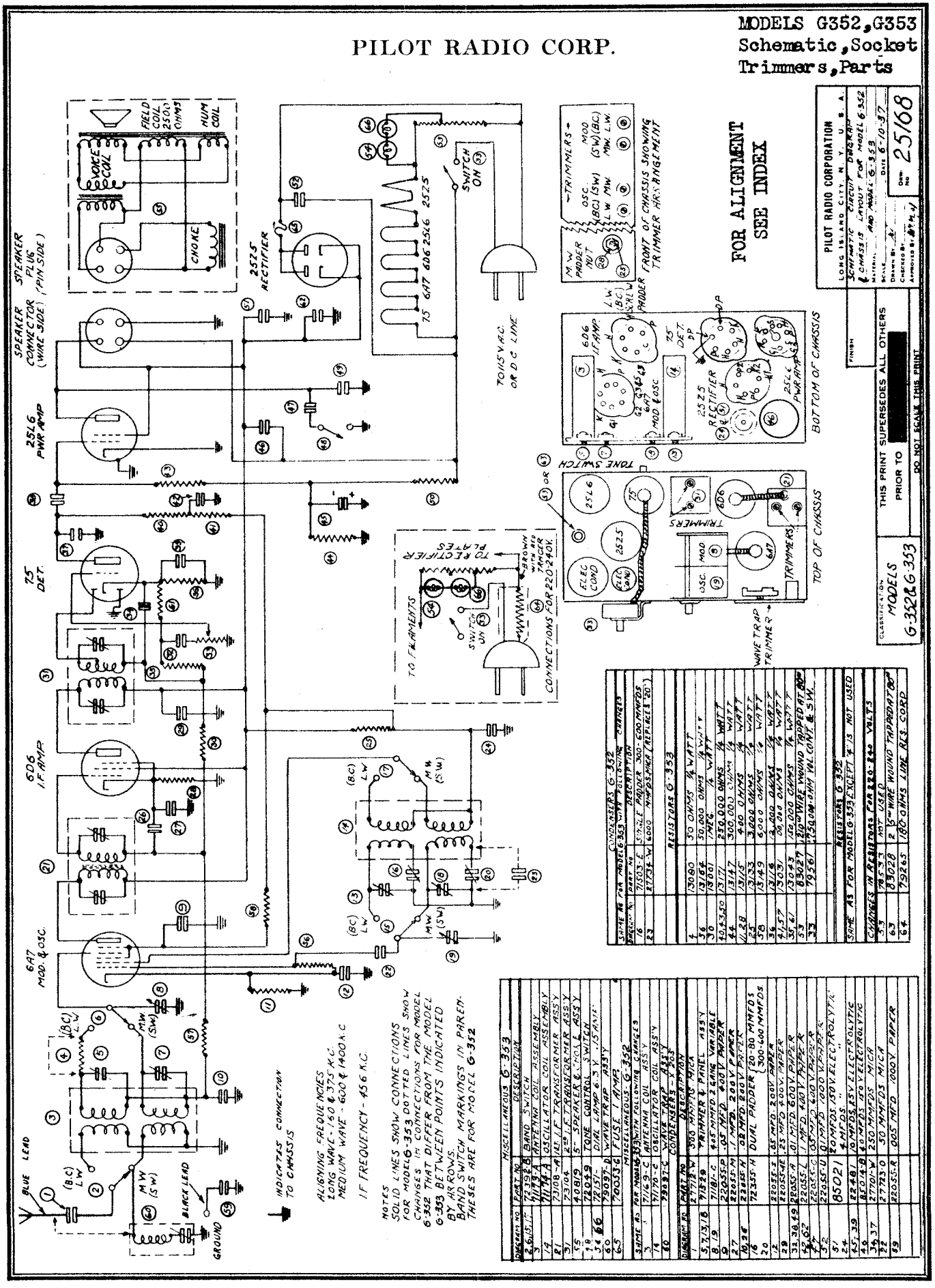

©John F. Rider, Publisher

MODELS 403,405
Schematic,Socket
Trimmers,Parts

PILOT RADIO CORP.

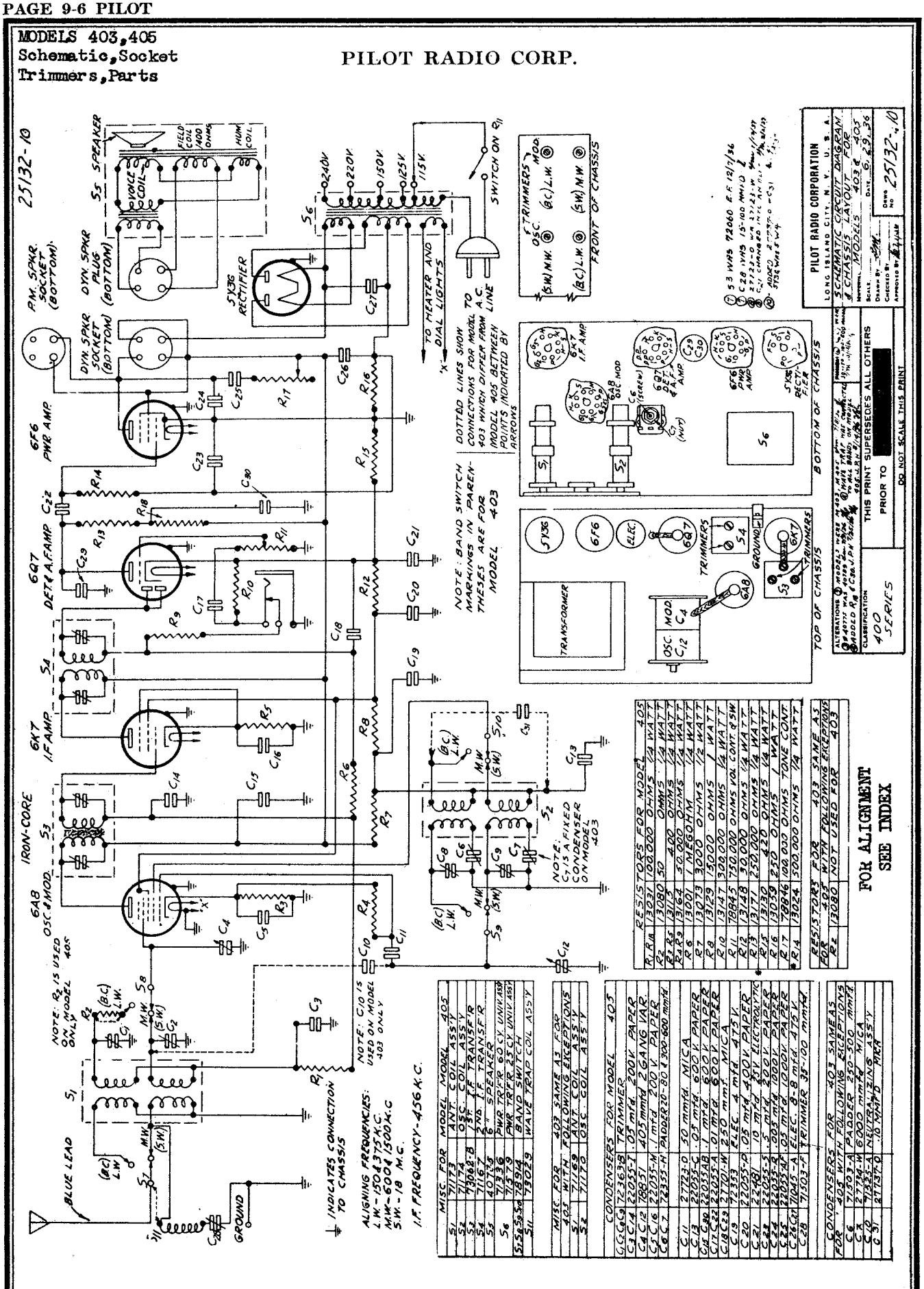

MISC. FOR MODEL 405

S1	71173	ANT. COIL ASS'Y
S2	71174	OSC. COIL ASS'Y
S3	73068-B	1ST I.F. TRANSFR.
S4	73067	2ND I.F. TRANSFR.
S5	71167	6" SPEAKER
S6	71335	PWR. TRFR. 60 CY. UNIV. ASS'Y
	71379	PWR. TRFR. 25 CY. UNIV. ASS'Y
S7 S8 S9 S10	78914	BAND SWITCH
S11	73029	WAVE TRAP COIL ASS'Y

MISC. FOR 403 SAME AS FOR 405 WITH FOLLOWING EXCEPTIONS

S1	71169	ANT. COIL ASS'Y
S2	71170	OSC. COIL ASS'Y

CONDENSERS FOR MODEL 405

C1 C5 C9	72636B	TRIMMER 200V. PAPER
C2 C14	22055-T	.05 mfd. 200V. PAPER
C4 C12	88851	405 mmfd 2 GANG VAR.
C5 C16	22055-N	.1 mfd. 200 V. PAPER
C6 C7	72355-H	PADER 20-80 & 300-600 mmfd.
C11	22723-D	50 mmfd. MICA
C13	22055-C	.05 mfd. 600V. PAPER
C15 C30	22055AB	.1 mfd. 600V. PAPER
C17 C22	22055-A	.01 mfd. 600V. PAPER
C18 C29	22701-W	250 mmfd. MICA
C19	71353	ELEC. 4 mfd. 475V.
C20	22055-D	.05 mfd. 400V. PAPER
C21	22401	.10 mfd. 400V. ELECTROLYTIC
C23	22055-S	.5 mfd. 200V. PAPER
C24	22055-J	.03 mfd. 1000V. PAPER
C25	22002-K	.05 mfd. 1000V. PAPER
C26 C27	71045-A	ELEC. 8 mfd. 475V.
C28	71503-F	TRIMMER 35-100 mmfd.

CONDENSERS FOR 403 SAME AS FOR 405 WITH FOLLOWING EXCEPTIONS

C6	71503-H	PADER 250-600 mmfd. MICA
C8	71335-M	400 mmfd. MICA
C9	71335-N	.10 MFD. PAPER ASS'Y
C31	71137-D	.10 MFD. PAPER

RESISTORS FOR MODEL 405

R1 R4	73031	100,000 OHMS 1/4 WATT
R2	73080	50 OHMS 1/4 WATT
R3 R5 R9	73163	400 OHMS 1/4 WATT
R6	73001	50,000 OHMS 1/4 WATT
R7	73073	3000 OHMS 1/2 WATT
R8	73129	3000 OHMS 1 WATT
R10	73147	300,000 OHMS 1/4 WATT
R11	78845	750,000 OHMS VOL CONT. & SW
R12	73148	30,000 OHMS 1/4 WATT
R13	73177	250,000 OHMS 1/4 WATT
R15	73039	420 OHMS 1 WATT
R16	73056	200 OHMS TONE CONT
R17	78896	100,000 OHMS 1/4 WATT
R14	73024	300,000 OHMS 1/4 WATT

RESISTORS FOR 403 SAME AS FOR 405 WITH FOLLOWING EXCEPTIONS

R2	73080	NOT USED FOR 403

©John F. Rider, Publisher

PILOT RADIO CORP.

MODELS 423,425
Schematic, Parts

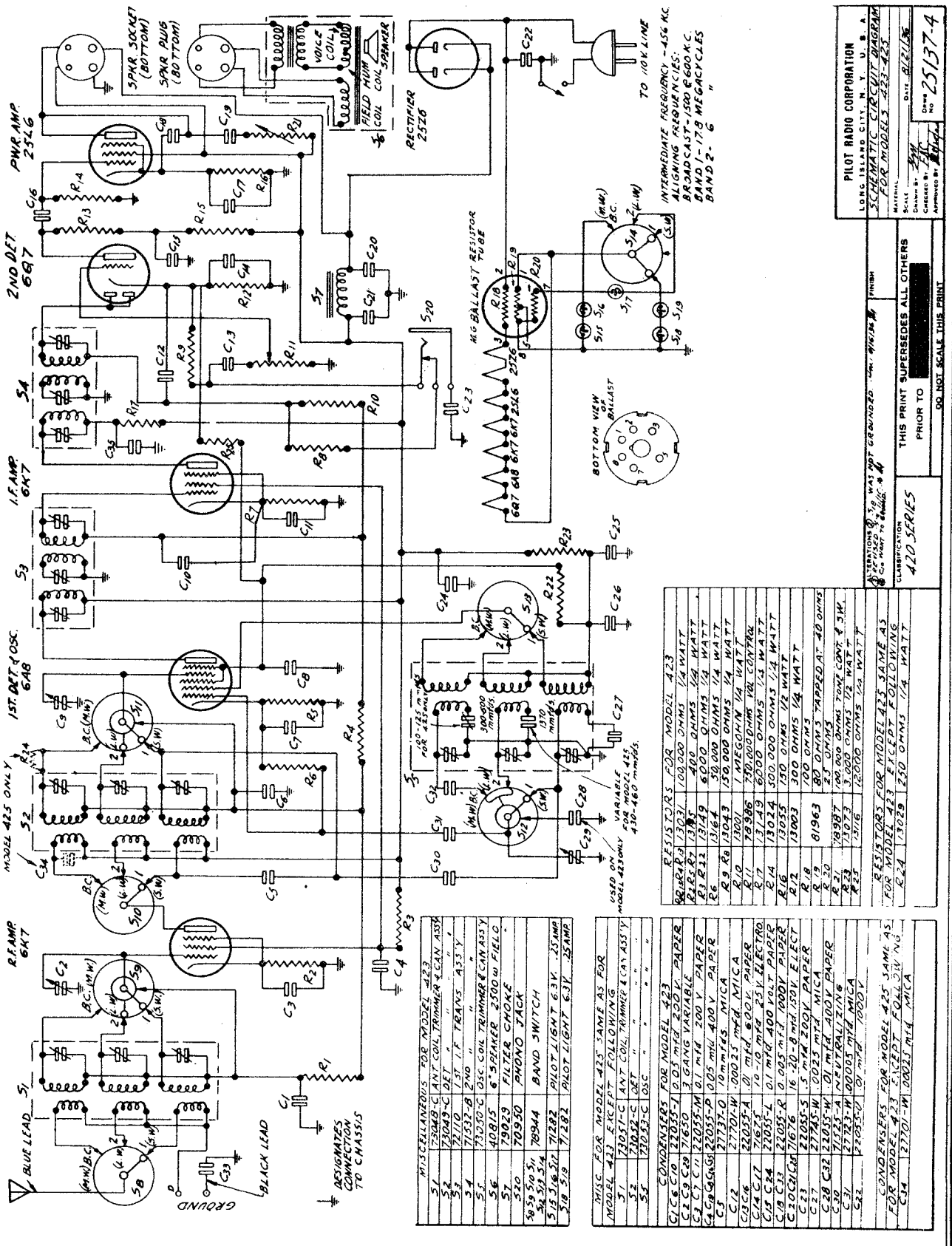

MISCELLANEOUS FOR MODEL 423		
S1	73048-C	ANT COIL TRIMMER & CAN ASS'Y
S2	73049-C	DET " " " "
S3	72110	1ST I.F. TRANS ASS'Y.
S4	71532-B	2ND " " "
S5	73250-C	OSC COIL TRIMMER & CAN ASS'Y
S6	40815	6" SPEAKER 2500 Ω FIELD
S7	79023	FILTER CHOKE
S10	70950	PHONO JACK
S8 S9 S11 S12 S13	78944	BAND SWITCH
S14 S16	71282	PILOT LIGHT 6.3V. .15 AMP
S15 S17	71282	PILOT LIGHT 6.3V. .25 AMP

MISC. FOR MODEL 425 SAME AS FOR MODEL 423 EXCEPT FOLLOWING		
S1	73051-C	ANT COIL TRIMMER & CAN ASS'Y
S2	73052-C	DET " " " "
S5	73053-C	OSC " " " "

CONDENSERS FOR MODEL 423		
C1 C6 C10	22035-J	0.05 mfd 250 V. PAPER
C2 C9 C29	71650	3 GANG VARIABLE
C3 C7 C11	22035-M	0.1 MIK 200 V PAPER
C4 C8 C16 C26	22035-D	0.05 mfd 400 V PAPER
C5	27737-D	10 mmfds MICA
C12 C31 C32	27701-W	.00025 mfd MICA
C13 C14 C17	22035-A	0.1 mfd 600 V. PAPER
C15 C24	71675	10-10 mfd 25 V. ELECTRO
C18 C23	22035-L	0.1 mfd 400 VOLT PAPER
C19 C20 C25 C28	22035-R	0.05 mfd 1000 V PAPER
C21	71676	16-40-8 mfd 150 V. ELECT
C22	22035-S	.5 mfd 200 V PAPER
C27	27745-W	0.025 mfd MICA
C30 C33	22035-W	0.1 mfd 400 V PAPER
C34	71723-A	NEUTRALIZING
C35	27723-W	.00005 mfd MICA
C36	22035-U	0.01 mfd 1000 V

CONDENSERS FOR MODEL 425 SAME AS FOR MODEL 423 EXCEPT FOLLOW NO.		
C34	27701-W	.00025 mfd MICA

RESISTORS FOR MODEL 423		
R1 R4 R18	73031	100,000 OHMS 1/4 WATT
R2 R5 R7	73055	400 OHMS 1/4 WATT
R3 R22	73149	6000 OHMS 1/4 WATT
R6	73164	50,000 OHMS 1/4 WATT
R9 R20	73043	150,000 OHMS 1/4 WATT
R10	73001	1 MEGOHM 1/4 WATT
R11	78386	250,000 OHMS VOL CONTROL
R17	73149	6000 OHMS 1/4 WATT
R14	73024	500,000 OHMS 1/4 WATT
R16	73055	150 OHMS 1/2 WATT
R12	73003	300 OHMS 1/4 WATT
R19	81963	100 OHMS
R20		80 OHMS TAPPED AT 40 OHMS
R21	78987	25 OHMS
R23	73073	100,000 OHMS TONE CONT & SW.
R25	73116	3,000 OHMS 1/2 WATT
		12,000 OHMS 1/2 WATT

RESISTORS FOR MODEL 425 SAME AS FOR MODEL 423 EXCEPT FOLLOWING		
R24	73029	250 OHMS 1/4 WATT

©John F. Rider, Publisher

©John F. Rider, Publisher

SERVICE INFORMATION FOR PILOT MODELS 403 AND 405

REMOVAL OF CHASSIS FROM CABINET:

To remove the chassis from the cabinet proceed as follows:

Be certain that the line cord is removed from the power outlet socket.

Remove the knobs and felt washers from the controls on the front panel, and loosen the set screw on the tuning knob.

Remove the speaker plug from the socket at the rear of the chassis.

Remove the four mounting screws, located underneath the cabinet and pull chassis out.

REALIGNMENT: If the receiver requires alignment, the procedure outlined below should be followed. In the schematic diagram sheet, the location and function of the various alignment capacitors are clearly illustrated. For best results, an external modulated oscillator with adequate frequency range and a visual output meter, should be used.

Before connecting the chassis to the power line, reconnect the speaker cable in its socket at the rear of the chassis.

I. F. ALIGNMENT: When aligning the Intermediate Frequency Amplifier, the external oscillator must be set at 456 kc. The Band Switch should be in the position marked "Broadcast", and the tuning condenser should be set at maximum capacity. When aligning the receiver on all positions, the volume control and the tone control should be turned to the maximum clockwise position. Connect the antenna lead of the external oscillator to the control grid of the 6K7 tube in the I. F. Amplifier through a .1 mfd. fixed condenser. Connect the ground lead of the external oscillator to the chassis. The I. F. alignment trimmers are located at the top of the shielded I. F. Transformers. Rotate the adjusting screw of each capacitor on I. F. Unit No. 2 slowly until maximum output is noted. Following this, connect the external oscillator leads to the control grid of the 6A8 tube. Adjust each trimmer on I. F. Unit No. 1 for maximum gain.

During these operations, use the least possible input to prevent broadening of the reasonance peaks.

In order to obtain the most accurate realignment of the I. F. amplifier, it is essential to repeat the alignment process in all I. F. Units, with the external oscillator leads connected to the control grid of the 6A8 tube.

WAVE TRAP ADJUSTMENT: With the oscillator still set at 456 kc., connect the oscillator to the antenna through a 200 mmfd. condenser. Then adjust the wave trap condenser for minimum deflection on the output meter.

BROADCAST ALIGNMENT: After the I. F. amplifier is completely realigned, connect the external oscillator leads to the receiver antenna and ground through a .0002 mfd. condenser. Leave the Band Switch in the "Broadcast" position and place the tuning control pointer at the 1500 kc. mark. Tune the external oscillator to 1500 kc. Adjust the broadcast band oscillator trimmer to maximum response.

Next adjust the interstage alignment trimmer for maximum response. Finally adjust the antenna section trimmer in the same manner.

Next adjust the 600 kc. padder condenser, located in the center of the chassis on the under side. Set the external oscillator at 600 kc. Rock the receiver tuning control around the resonance position, and at the same time adjust the padder condenser for the highest peak.

Now repeat the 1500 kc. trimmer adjustment, following in every detail the procedure previously described.

The alignment frequencies are as follows:

Longwave Band — 800 meters (375 kc.)
Broadcast Band — 200 meters (1,500 kc.)
Band 1—16.7 meters (18,000 kc.)

BAND 1: Align Band 1 in a similar manner using a 400-ohm non-inductive resistor in place of the .0002 mfd. condenser. The alignment frequency is 18,000 kc. (16.7 meters).

The alignment of Band 1 requires greater care due to the higher frequencies covered by this band. Rotate the tuning condenser of the receiver until the dial pointer is co-incidental with the 18,000 kc. indication on the dial scale. Adjust the oscillator trimmer condenser for maximum sensitivity. Proceed next to align the detector section. In doing this it is essential to rock the tuning control back and forth about the resonance position and at the same time to adjust the trimmer for the highest resonant peak.

THE LONG WAVE ALIGNMENT procedure in the Model 405 is similar to that of the broadcast. Turn the Band Switch to the Long Wave position. The alignment frequency is 375 kc. Adjust the padder condenser at 150 kc. Use a .0002 mfd. condenser in the antenna lead from the external oscillator.

REMOVAL OF BAND SELECTOR SWITCH ASSEMBLY: Should it be necessary to remove the switch assembly, it is advisable to realign the receiver after reinstalling it.

CAUTION: When making repairs on the receiver, use only ROSIN CORE SOLDER. NEVER USE SOLDERING PASTE OR ACID FLUXES OF ANY TYPE.

RECEIVER DESCRIPTION

Operating Voltages—115, 125, 150, 220, 240 volts, Alternating Current.
Frequency Rating—50 to 60 cycles.
Power Consumption—60 watts.
Tubes—1 type 6A8, 1 type 6K7, 1 type 6Q7, 1 type 6F6, 1 type 5W4.
Undistorted Power Output—3 watts.
Intermediate Frequency—456 kc.
Tube Functions—
Type 6A8: Electron emission control oscillator-detector.
Type 6K7: I. F. amplifier.
Type 6Q7: Duo-diode detector amplifier.
Type 6F6: Class "A" power pentode.
Type 5W4: Full-wave rectifier for power supply.

VOLTAGES

The D. C. Voltages measured at the tube sockets of the set should be read with a high resistance voltmeter of at least 1000 ohms per volt.

	OSC. DET. Type 6A8	I. F. Type 6K7	DIODE DET. Type 6Q7	POWER PENTODE Type 6F6	RECTIFIER Type 5W4
Plate	230	230	105*	205	
Cathode	4.	3.5	1.3		320
Screen	85	85		230	
Filament	6.3	6.3	6.3	6.3	5.

*Voltages measured through 250,000 ohm plate resistor.
Speaker field voltage 90 volts. All plate voltages measured to cathode.
All screen voltages measured to cathode.
All cathode voltages measured to chassis frame.

Range, Model 423

16 - 555 m. (18,800 - 540 kc)

REMOVAL OF CHASSIS FROM CABINET:

To remove the chassis from the cabinet proceed as follows:

Be certain that the line cord is removed from the power outlet socket.

Remove the "slip-on" knobs and felt washers from the controls and loosen the set screw on the tuning knob.

Remove the speaker plug from the cable socket.

Remove the four mounting screws, located underneath the cabinet.

REALIGNMENT: Should the receiver require realignment, the procedure outlined below should be followed. For best results an external modulated oscillator with adequate frequency range, and a visual output meter, should be used.

Before connecting the chassis to the power line, reconnect the speaker cable in its socket.

The R. F. alignment trimmer condensers are mounted on the side of the R. F. shields.

I. F. ALIGNMENT: When aligning the Intermediate Frequency Amplifier, the external oscillator must be set at 456 kc. The Band Selector Switch should be in the position marked "Broadcast", and the tuning condenser should be set at maximum capacity. Connect the "antenna" lead of the external oscillator to the control grid of the type 6K7 tube in the I. F. Amplifier stage through a .1 mfd. fixed condenser. Connect the "ground" lead of the external oscillator to the receiver ground lead. The I. F. alignment capacitors are located at the side of the shielded I. F. Transformers. Rotate the adjusting screw of each capacitor on I. F. Unit No. 2 slowly until maximum output is noted. On completion of this operation, remove the external oscillator lead from the type 6K7 I. F. amplifier tube and connect it in the same manner to the control grid at the top of the type 6A8 tube.

Now rotate each adjustment screw on I. F. Unit No. 1 for maximum output. During these operations, use the least possible input to prevent broadening of the resonance peaks.

In order to obtain the most accurate realignment of the I. F. amplifier, it is essential to repeat the alignment process in both I. F. Units.

BROADCAST ALIGNMENT: After the I. F. amplifier is completely realigned, connect the external oscillator leads to the receiver antenna and ground leads. Insert a 200 mmf. condenser in series with the antenna lead. Set the Band Selector Switch in the "Broadcast" position and place the tuning control pointer at the 1500 kc. mark. Adjust the broadcast band oscillator trimmer.

Range, Model 425

16 - 555 m. (18,800 - 540 kc)
731 - 2140 m. (410 - 140 kc.)

(MODEL 425 IS SOLD OUTSIDE THE U. S. A. ONLY)

Next adjust the interstage alignment trimmer for maximum response. Finally adjust the antenna section trimmer in the same manner.

Next adjust the 600 kc. padder condenser, located on the top of the oscillator coil. Set the external oscillator at 600 kc. Rotate the receiver tuning control until resonance is indicated. Then rock the tuning control back and forth about this resonance position, and at the same time adjust the padder condenser for the highest resonance peak.

Now repeat the 1500 kc. trimmer adjustment, following in every detail the procedure previously described.

ALIGNMENT OF THE SHORT WAVE-BANDS:— The procedure in aligning the short wave-bands is identical with that for the broadcast with the exception of the adjustment of the padder condenser. Insert a 400 ohm non-inductive resistor in series with the antenna lead. The alignment frequencies are as follows:

Band 2: 50 Meters—(6,000 kc.)
Band 1: 16.6 Meters—(18,000 kc.)

When aligning Band 2, set the Band Selector Switch in the position marked "Band 2". Set the tuning control pointer at 50 meters. Adjust the oscillator alignment capacitor on Band 2 for maximum output. Next adjust the interstage and antenna section alignment capacitors for maximum output.

To align Band 1, set the Band Selector Switch in the position marked "Band 1". Set the tuning control pointer at the 16.6 meter mark. Set the external oscillator at 16.6 meters. Adjust the oscillator section alignment capacitor on Band 1 for maximum output.

Proceed next to align the interstage section of Band 1. In doing this, it is essential to rock the tuning control back and forth about the resonance position and at the same time to adjust the trimmer for the highest resonance peak. Next align the antenna section for maximum sensitivity.

LONG WAVE MODEL 425

The above alignment positions refer to the Model 423 only, which is calibrated in frequency. The alignment points for the Model 425, which is calibrated in meters only, is as follows:

Long Wave	Align at 750 meters.
	Pad at 2,000 meters.
Broadcast	Align at 200 meters.
	Pad at 500 meters.
Band 1	Align at 17 meters.

The Long Wave alignment procedure is similar to that for the Broadcast. A 200 mmf. condenser should be used in series with the antenna lead in aligning this band.

CAUTION: When making repairs on the receiver, use only ROSIN CORE SOLDER. NEVER USE SOLDERING PASTE OR ACID FLUXES OF ANY TYPE.

PILOT RADIO CORP.

MODELS BG 562, BG 563
Schematic, Socket
Trimmers, Parts

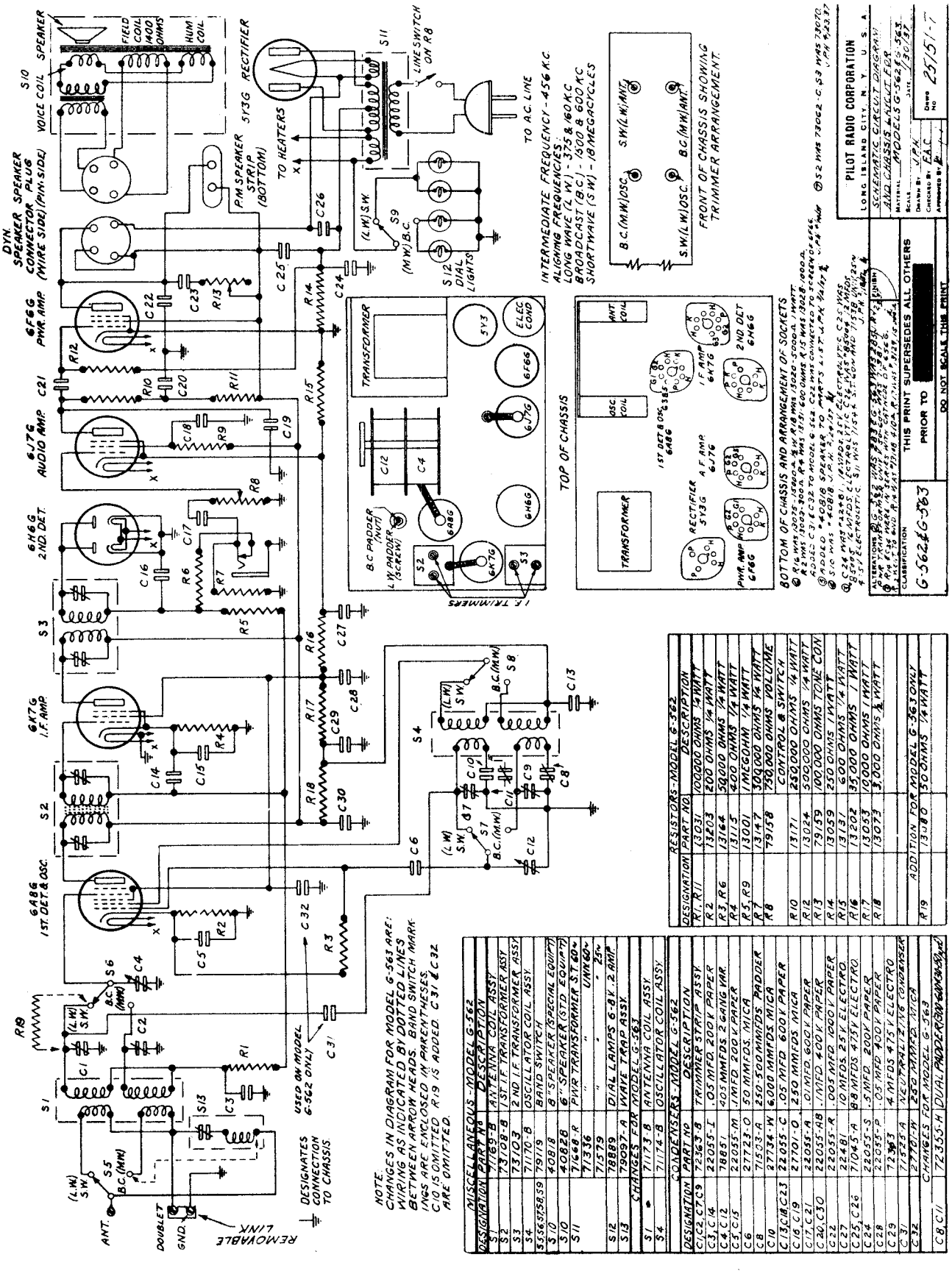

MISCELLANEOUS - MODEL G-562

DESIGNATION	PART NO	DESCRIPTION
S1	71689-B	ANTENNA COIL ASSY
S2	73108-B	1ST I.F. TRANSFORMER ASSY
S3	73103	2ND I.F. TRANSFORMER ASSY
S4	71170-B	OSCILLATOR COIL ASSY
S5,S6,S7,S8,S9	79119	BAND SWITCH
S10	40818	8" SPEAKER (SPECIAL EQUIPT)
S10	40828	6" SPEAKER (STD. EQUIPT)
S11	71668-R	PWR TRANSFORMER ST. 60~ UNIVERSAL
	71336	" " " 25~
	71579	" " " 50~
S12	78889	DIAL LAMPS 6-8 V. 2 AMP
S13	79097-A	WAVE TRAP ASSY.
CHANGES FOR MODEL G-563		
S1 •	71173-B	ANTENNA COIL ASSY
S4	71174-B	OSCILLATOR COIL ASSY

CONDENSERS - MODEL G-562

DESIGNATION	PART NO	DESCRIPTION
C1,C2,C7,C9	72363-B	TRIMMER STRIP ASSY
C3,C14	22055-I	.05 MFD. 200 V. PAPER
C4,C12	7885	405 MMFDS 2 GANG VAR.
C5,C15	22055-M	.1 MFD. 200 V. PAPER
C6	27723-O	50 MMFDS. MICA
C8	71503-A	250-500 MMFDS. PADDER
C10	27734-W	6,000 MMFDS MICA
C13,C16,C23	22055-C	.05 MFD. 600 V. PAPER
C16,C19	27701-O	250 MMFDS MICA
C17,C21	22055-A	.01 MFD. 600 V. PAPER
C20,C30	22055-AB	.1 MFD. 400 V. PAPER
C22	22055-R	.005 MFD. 1000 V. PAPER
C27	22481	.10 MFDS. 25 V. ELECTRO.
C25,C26	71045-A	8 MFDS 475 V ELECTRO.
C24	22055-S	.5 MFD. 200 V PAPER
C28	22055-P	.05 MFD 400 V PAPER
C29	72393	4 MFDS 475 V ELECTRO
C31	71225-A	NEUTRALIZING CONDENSER
C32	27701-W	250 MMFD MICA
CHANGES FOR MODEL G-563		
C8,C11	72355-H	DUAL PADDER 365-1500 KC

RESISTORS - MODEL G-562

DESIGNATION	PART NO	DESCRIPTION
R1, R11	13031	100,000 OHMS ¼ WATT
R2	13203	200 OHMS ¼ WATT
R3, R6	13164	30,000 OHMS ¼ WATT
R4	13115	400 OHMS ¼ WATT
R5, R9	13001	1 MEGOHM ¼ WATT
R7	13147	300,000 OHMS ¼ WATT
R8	79158	750,000 OHMS VOLUME CONTROL & SWITCH
R10	13171	250,000 OHMS ¼ WATT
R12	13024	500,000 OHMS ¼ WATT
R13	79159	100,000 OHMS TONE CON
R14	13059	250 OHMS 1 WATT
R15	13131	600 OHMS ¼ WATT
R16	13202	35,000 OHMS 1 WATT
R17	13053	10,000 OHMS 1 WATT
R18	13073	1,000 OHMS 1 WATT
ADDITION FOR MODEL G-563 ONLY		
R19	13180	50 OHMS ¼ WATT

©John F. Rider, Publisher

MODELS BG 562, BG563
Voltage, Alignment

PILOT RADIO CORP.

SERVICE INFORMATION FOR PILOT MODELS BG-562 AND BG-563

REMOVAL OF CHASSIS FROM CABINET:

To remove the chassis from the cabinet proceed as follows:

Be certain that the line cord is removed from the power outlet socket.

Remove the knobs and felt washers from the controls on the front panel, and loosen the set screw on the tuning knob.

Remove the speaker socket from the plug mounted on the speaker.

Remove the four mounting screws, located underneath the cabinet and pull chassis out.

REALIGNMENT: If the receiver requires alignment, the procedure outlined below should be followed. In the schematic diagram sheet, the location and function of the various alignment capacitors are clearly illustrated. For best results, an external modulated oscillator with adequate frequency range and a visual output meter, should be used.

Before connecting the chassis to the power line, reconnect the speaker cable in its socket at the rear of the chassis.

I. F. ALIGNMENT: When aligning the Intermediate Frequency Amplifier, the external oscillator must be set at 456 kc. The Band Switch should be in the position marked "Broadcast", and the tuning condenser should be set at maximum capacity. When aligning the receiver on all positions, the volume control and the tone control should be turned to the maximum clockwise position. Connect the antenna lead of the external oscillator to the control grid of the 6K7G tube in the I. F. Amplifier through a .1 mfd. fixed condenser. Connect the ground lead of the external oscillator to the chassis. The I. F. alignment trimmers are located at the top of the shielded I. F. Transformers. Rotate the adjusting screw of each capacitor on I. F. Unit No. 2 slowly until maximum output is noted. Following this, connect the external oscillator leads to the control grid of the 6A8G tube. Adjust each trimmer on I. F. Unit No. 1 for maximum gain.

During these operations, use the least possible input to prevent broadening of the resonance peaks.

In order to obtain the most accurate realignment of the I. F. amplifier, it is essential to repeat the alignment process in all I. F. Units, with the external oscillator leads connected to the control grid of the 6A8G tube.

WAVE TRAP ADJUSTMENT: With the oscillator still set at 456 kc., connect the oscillator to the antenna through a .0002 mfd. condenser. Then adjust the wave trap condenser for minimum deflection on the output meter.

BROADCAST ALIGNMENT: After the I. F. amplifier is completely realigned, connect the external oscillator leads to the receiver antenna and ground through a .0002 mfd. condenser. Leave the Band Switch in the "Broadcast" position and place the tuning control pointer at the 1500 kc. mark. Tune the external oscillator to 1500 kc. Adjust the broadcast band oscillator trimmer to maximum response.

Next adjust the interstage alignment trimmer for maximum response. Finally adjust the antenna section trimmer in the same manner.

Next adjust the 600 kc. padder condenser, located in the center of the chassis on the under side. Set the external oscillator at 600 kc. Rock the receiver tuning control around the resonance position, and at the same time adjust the padder condenser for the highest peak.

Now repeat the 1500 kc. trimmer adjustment, following in every detail the procedure previously described.

The alignment frequencies are as follows:

Longwave Band — 800 meters (375 kc.)
Broadcast Band — 200 meters (1,500 kc.)
Band 1—16.7 meters (18,000 kc.)

BAND 1: Align Band 1 in a similar manner using a 400-ohm non-inductive resistor in place of the .0002 mfd. condenser. The alignment frequency is 18,000 kc. (16.7 meters).

The alignment of Band 1 requires greater care due to the higher frequencies covered by this band. Rotate the tuning condenser of the receiver until the dial pointer is co-incidental with the 18,000 kc. indication on the dial scale. Adjust the oscillator trimmer condenser for maximum sensitivity. Proceed next to align the detector section. In doing this it is essential to rock the tuning control back and forth about the resonance position and at the same time to adjust the trimmer for the highest resonance peak.

THE LONG WAVE ALIGNMENT procedure in the Model BG-563 is similar to that of the broadcast. Turn the Band Switch to the Long Wave position. The alignment frequency is 375 kc. Adjust the padder condenser at 150 kc. Use a .0002 mfd. condenser in the antenna lead from the external oscillator.

REMOVAL OF BAND SELECTOR SWITCH ASSEMBLY: Should it be necessary to remove the switch assembly, it is advisable to realign the receiver after reinstalling it.

CAUTION: When making repairs on the receiver, use only ROSIN CORE SOLDER. NEVER USE SOLDERING PASTE OR ACID FLUXES OF ANY TYPE.

RECEIVER DESCRIPTION

Operating Voltages—115, 125, 150, 220, 240 volts, Alternating Current.
Frequency Rating—50 to 60 cycles.
Power Consumption—60 watts.
Tubes—1 type 6A8G, 1 type 6K7G, 1 type 6H6G, 1 type 6J7G, 1 type 6F6G, 1 type 5Y3.
Undistorted Power Output—3 watts.
Intermediate Frequency—456 kc.

Tube Functions—
Type 6A8G: Electron emission control oscillator-detector.
Type 6K7G: I. F. amplifier.
Type 6H6G: Duo-diode detector.
Type 6J7G: A. F. amplifier.
Type 6F6G: Class "A" power pentode.
Type 5Y3: Full-wave rectifier for power supply.

VOLTAGES

The D. C. Voltages measured at the tube sockets of the set should be read with a high resistance voltmeter of at least 1000 ohms per volt.

	OSC. DET. Type 6A8G	I. F. Type 6K7G	DIODE DET. Type 6H6G	A. F. AMP. Type 6J7G	POWER PENTODE Type 6F6G	RECTIFIER Type 5Y3
Plate	240	240		60*	220	
Cathode	2.6	2.6		5		310
Screen	70	70		23*	240	
Filament	6.3	6.3	6.3	6.3	6.3	5.
Osc. Anode	180					

*Voltages measured through high resistance.
Speaker field voltage 90 volts. All plate voltages measured to cathode.
All voltages measured to chassis frame.

©John F. Rider, Publisher

MODELS H554, H555
Schematic, Parts

PILOT RADIO CO.

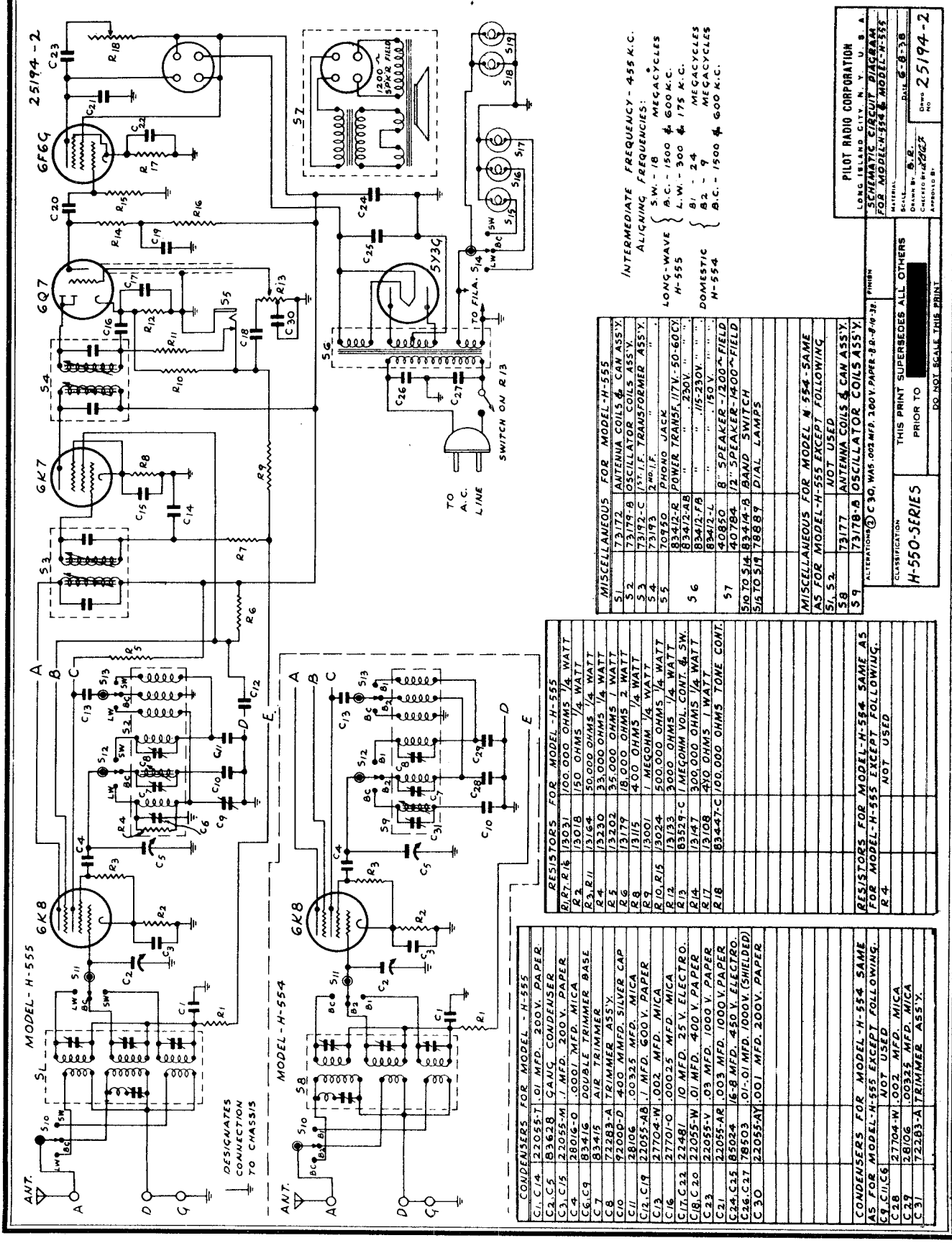

CONDENSERS FOR MODEL-H-555		
C1, C14	22055-T	.01 MFD. 200 V. PAPER
C2, C5	83628	GANG CONDENSER
C3, C15	22055-M	.1 MFD. 200 V. PAPER
C4	28016-0	.0001 MFD. MICA
C6, C9	83416	DOUBLE TRIMMER BASE
C7	83415	AIR TRIMMER
C8	72283-A	TRIMMER ASS'Y.
C10	92000-D	400 MMFD. SILVER CAP
C11	28106	.00325 MFD. MICA
C12, C19	22055-AB	.1 MFD. 600 V. PAPER
C13	27704-W	.002 MFD. MICA
C16	27701-0	.00025 MFD. MICA
C17, C22	22481	10 MFD. 25 V. ELECTRO.
C18, C20	22055-W	.01 MFD. 400 V. PAPER
C23	22055-V	.05 MFD. 1000 V. PAPER
C21	22055-AR	.003 MFD. 1000 V. PAPER
C24, C25	85024	16-8 MFD. 450 V. ELECTRO.
C26, C27	78503	.01-.01 MFD. 1000 V. (SHIELDED)
C30	22055-AY	.001 MFD. 200 V. PAPER

CONDENSERS FOR MODEL-H-554 SAME AS FOR MODEL-H-555 EXCEPT FOLLOWING.		
C9, C11, C6	27704-W	.002 MFD. MICA
C28	28106	.00325 MFD. MICA
C29	28106	.00325 MFD. MICA
C31	72283-A	TRIMMER ASS'Y.

RESISTORS FOR MODEL-H-555		
R1, R7, R16	13031	100,000 OHMS 1/4 WATT
R2	13018	150 OHMS 1/4 WATT
R3, R11	13164	50,000 OHMS 1/4 WATT
R4	13230	33,000 OHMS 1/4 WATT
R5	13202	35,000 OHMS 1 WATT
R6	13179	18,000 OHMS 2 WATT
R8	13115	400 OHMS 1/4 WATT
R9	13001	1 MEGOHM 1/4 WATT
R10, R15	13024	500,000 OHMS 1/4 WATT
R12	13133	3000 OHMS 1/4 WATT
R13	83529-C	1 MEGOHM VOL. CONT. & SW.
R14	13147	300,000 OHMS 1/4 WATT
R17	13108	410 OHMS 1 WATT
R18	83447-C	100,000 OHMS TONE CONT.

RESISTORS FOR MODEL-H-554 SAME AS FOR MODEL-H-555 EXCEPT FOLLOWING.	
R4	NOT USED

MISCELLANEOUS FOR MODEL-H-555			
S1	73172	ANTENNA COILS & CAN ASS'Y.	
S2	73179-B	OSCILLATOR COILS ASS'Y.	
S3	73192-C	1ST I.F. TRANSFORMER ASS'Y.	
S4	73193	2ND I.F. " "	
S5	70950	PHONO JACK	
S6	83412-R	POWER TRANSF. 117V. 50-60 CY.	
	83412-AB	" " " 230V. " "	
	83412-FB	" " " 115-230V. " "	
	83412-L	" " " 150 V. " "	
S7	40850	8" SPEAKER - 1200 ~ FIELD	
	40784	12" SPEAKER - 1400 ~ FIELD	
S10 TO S14	83414-B	BAND SWITCH	
S15 TO S19	78889	DIAL LAMPS	

MISCELLANEOUS FOR MODEL H-554 - SAME AS FOR MODEL-H-555 EXCEPT FOLLOWING.		
S1, S2	NOT USED	
S8	73177	ANTENNA COILS & CAN ASS'Y.
S9	73178-B	OSCILLATOR COILS ASS'Y.

ALTERATIONS: ② C30, WAS .002 MFD. 200 V. PAPER - 8-8-38 FINISH

CLASSIFICATION: H-550-SERIES

THIS PRINT SUPERSEDES ALL OTHERS PRIOR TO [redacted]

DO NOT SCALE THIS PRINT

PILOT RADIO CORPORATION
LONG ISLAND CITY, N. Y. U. S. A.
SCHEMATIC CIRCUIT DIAGRAM FOR MODEL H-554 & MODEL H-555
MATERIAL
SCALE
DRAWN BY: S.R. DATE: 6-8-38
CHECKED BY: [redacted] APPROVED BY:
DRWG NO. 25194-2

©John F. Rider, Publisher

©John F. Rider, Publisher

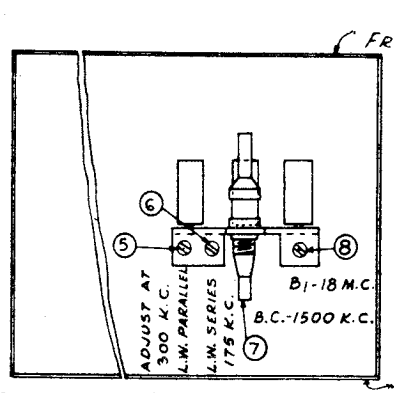

BOTTOM VIEW OF CHASSIS
LONG WAVE - H-555

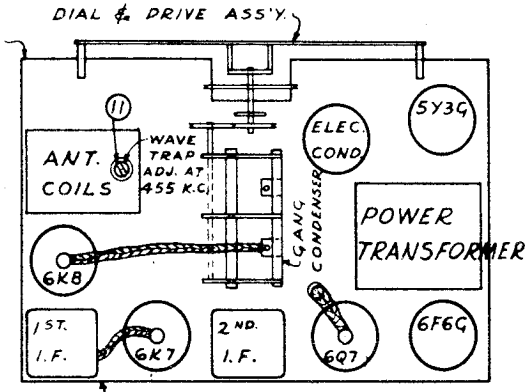

TOP VIEW OF CHASSIS

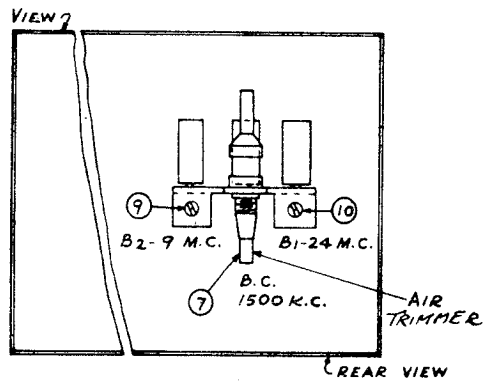

BOTTOM VIEW OF CHASSIS
DOMESTIC - H-554

25/195

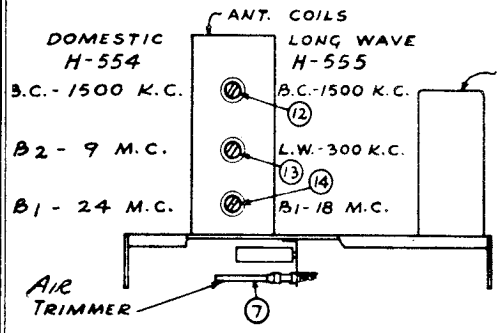

LEFT SIDE OF CHASSIS

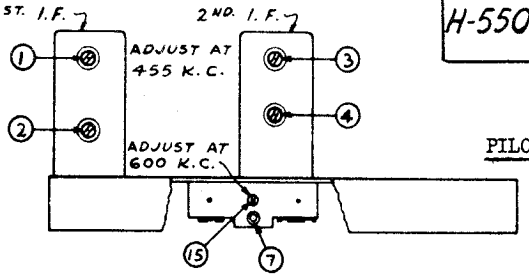

REAR VIEW OF CHASSIS

CLASSIFICATION
H-550-SERIES

TRIMMER LAYOUT
MATERIAL
SCALE
DATE 7-26-38
DRAWN BY B.R.
CHECKED BY
APPROVED BY
DRWG NO 25/195

PILOTUBES Required

One 6K8	1st detector-oscillator
One 6K7	IF amplifier
One 6Q7	2nd detector-AVC-1st audio amplifier
One 6F6-G	output tube
One 5Y3-G	power supply rectifier

Total 5 tubes

GENERAL SPECIFICATIONS.

Circuit Super-Heterodyne, with Class A output stage. Three tuning ranges as listed below. Permeability tuned IF transformers. Tone compensated volume control, Continuously variable tone control, Automatic Volume Control and Cathode Ray Tuning Beacon.

Power Supply

Voltage	Frequency	Watts
110 to 125 volts	60	60
150 volts	60	60
220 to 240 volts	60	60
110 to 125 or 220 to 240 volts	60	60

Intermediate Frequency 455 kilocycles

Panel Controls Volume with On-Off swithc, Tone, Band Selector Swithc, Dual ratio, planetary drive, tuning control

Maximum Power Output 4.8 watts

Tuning Ranges The model H-554 chassis has the following tuning ranges:

Band 1	24.8	to	8.3 mc	or	12.09	to	36.12	meters
Band 2	9.7	to	2.9 mc	or	30.9	to	103.4	meters
Band 3	1725	to	530 kc	or	174	to	566	meters

The model H-555 Chassis has the following tuning ranges:

Band 1	18.8	to	5.35 mc	or	15.9	to	56.04	meters
Band 2	1725	to	530 kc	or	174	to	566	meters
Band 3	375	to	145 kc	or	800	to	2069	meters

PILOT RADIO CO.

MODELS H664,H665
Alignment

PILOT RADIO CO.

MODELS H554,H555
Voltage,Alignment

PILOT RECEIVERS OF THE H-550 SERIES.

SERVICE DATA

Removal of the chassis from the cabinet, when necessary, is done as follows:-

1. Remove the power supply cord from the supply outlet.
2. Remove the knobs and felt washers from all shafts on the front of the cabinet. These knobs are of the "push-on" type.
3. Remove the speaker cord from the socket on the speaker.
4. Remove the four mounting screws located under the cabinet and carefully slide the chassis out of the cabinet.

Receiver Alignment — Equipment Required.

1. Signal Generator. One using fundamental frequencies for all the frequencies used in the receiver is preferred.
2. Output Meter. Generally a copper oxide rectifier meter is the most convenient.
3. Dummy Antennas. .1 mfd. condenser
   .0002 mfd mica condenser
   400 ohm, non-inductive resistor

Alignment Connections — There are three wires with connectors on the ends, extending from the chassis to the rear of the cabinet. Their colors and uses are:

Blue - Antenna
Yellow - Doublet Connector
Black - Ground

Connect the black and yellow wires together and to the ground post of the signal generator.

Connect the "hot" post of the generator through the correct dummy antenna or condenser to the appropriate point as noted hereafter.

In all the measurements to follow, the output meter should be connected to the plate and screen grid terminals of the 6F6-G tube, through .1 mfd condensers, in any convenient manner.

Procedure — The volume and tone controls should all be turned to the extreme clockwise positions, before starting.

The location of all trimmers is shown in the accompaning figure. Always keep the output from the signal generator at the lowest value which will give a readable deflection on the output meter.

IF Amplifier Alignment — Turn the Band Selector Switch to Band 3 and turn the receiver dial pointer to the low frequency end.

Connect the output meter as described under "Connections", and connect the "hot" post of the signal generator to the grid of the 6K8 tube through the .1 mfd condenser. Then proceed with the alignment as follows:-

1. Adjust the signal generator frequency to 455 kilocycles, and adjust the generator output to the lowest value which will give a readable signal on the output meter.
2. Adjust the screws 1, 2, 3, and 4 (see figure), for maximum reading of output meter. Keep reducing the output from the generator if the output meter reading increases too much.

If the output of the generator to the receiver is too great, the alignment of the receiver will not be correct, as the AVC action will become too great, and the amplifier will appear broad in tuning.

It will seldom, if ever, be found necessary to more than touch up the alignment of the IF amplifier. Of course, if the amplifier adjustment screws have been tampered with, if the amplifier adjustment screws have been tampered with, it will probably be necessary to completely realign the amplifier. In this case, connect the generator to the grid of the IF amplifier tube, and align the last IF transformer. Always finish the alignment with the signal input to the 6K8 tube.

A cathode ray oscilloscope is not necessary in making the above adjustments. One may be used, however, if desired.

Wave Trap Alignment — With the Band Selector Switch set on the Broadcast Band, replace the .1 mfd dummy antenna with the .0002 mfd dummy antenna. Set the generator frequency at 455 kc and tune trimmer #11 for minimum reading of the output meter. There must be sufficient output from the signal generator to always have a reading on the output meter, do not allow the meter go to zero and call that the correct adjustment point.

R.F. Alignment

Band 3 (Model 555 Long-Wave) — Connect the "hot" terminal of the generator to the blue wire and clip through the .0002 mfd condenser.

Set the generator frequency to 300 kc., and with the Band Selector Switch set to Band 3, turn the receiver dial pointer to 300 kc. Adjust trimmer #5 for maximum reading of the output meter. Do likewise with trimmer #13. Then set the generator frequency to 175 kc and the receiver dial pointer to approximately the same. Adjust trimmer #6 for maximum reading of the output meter, while "rocking" the gang condenser carefully back and forth. Then go back and repeat the 300 kc alignment.

Band 2 (Model 555) Band 3 (Model 554) (Standard Broadcast)

Connections are the same for the alignment of this band as they are for the long-wave band.

Set the generator frequency to 1500 kc., and the receiver dial pointer to the same frequency, with the band selector switch set appropriately. Adjust trimmer #7 for maximum reading of the output meter. (This trimmer is adjusted by moving the brass rod in or out, with a hooked wire, and with a twisting motion. First loosen the lock nut). Then without touching any tuning controls adjust trimmer #12 for maximum reading of the output meter.

Next, set the generator frequency to 600 kc., and accurately set the receiver dial pointer to the 600 kc. mark. Then adjust trimmer #15 for maximum reading of the output meter. Do not move the tuning control while making this adjustment. Finally return and repeat the 1500 kc. adjustments and then tighten the lock nut on trimmer #7.

Band 1 (Model 555 Short-Wave)

Remove the .0002 mfd dummy antenna used in aligning the lower frequency bands and substitute the 400 ohm resistor.

Before aligning this band refer to the paragraph headed "Image Frequency".

Set the generator frequency to 18 mc. and also set the receiver dial pointer to this frequency. Carefully adjust trimmer #8 for maximum reading of the output meter, be careful you do not tune in at the Image Frequency.

Then adjust trimmer #14 for maximum output meter reading, while slightly "rocking" the gang condenser. Readjust trimmer #8 if necessary to keep the calibration correct. These are the only adjustments on this band.

Band 2 (Model 554 Short-Wave).)

Connections and dummy antenna same as on Band 1 above.

Before aligning this band refer to the paragraph heading "Image Frequency".

Set the generator, and the receiver dial pointer to 9 mc. Adjust trimmer #9 for maximum reading of the output meter, be careful you do not tune in at the Image Frequency.

Then adjust trimmer #13 for maximum reading of the output meter, while slightly "rocking" the gang condenser. Readjust trimmer #9 if necessary to correct the calibration.

Band 1 Alignment (Model 554 Short-Wave)

Connections and dummy antenna are the same as on Band 2 of model 554.

Before aligning this band, refer to the paragraph headed "Image Frequency".

Set the generator frequency to 24 mc. and the receiver dial pointer to 24 mc. Adjust trimmer #10 to 24 mc. for maximum reading of the output meter. Be careful that the receiver is not adjusted to the Image Frequency. Then adjust trimmer #14 while "rocking" the gang condenser, for maximum reading of the output meter. Reset trimmer #10 so that calibration is correct if necessary.

Image Frequency

All bands in these two models must be aligned with the oscillator frequency higher than the signal frequency. There can be no error in doing this on the Long-Wave and Broadcast Bands. However, on the higher frequency bands it is possible to incorrectly adjust the alignment in this respect, and end up with the receiver aligned on what should be the Image Frequency.

The chances of doing this may be eliminated by adjusting the generator to the correct aligning frequency, and with sufficient output from the generator to pick up two signals with the receiver, separated by twice the Intermediate Frequency, set the receiver dial pointer to that one which comes in at the higher frequency marking on the receiver dial pointer.

D.C. SOCKET VOLTAGES

All voltages are those between the indicated tube terminal and the chassis, and are made with a 1000 ohm per volt voltmeter. Make measurements with no signal input to the receiver and with the volume control set at minimum volume.

Make sure that the A.C. supply voltage is correct for the transformer tap being used at the time of measurement.

	Socket Terminals							
Tube	1	2	3	4	5	6	7	8
6K8	-	-	240	95	-	110	-	2.8
6K7	-	-	240	95	3.3	-	-	3.3
6Q7	-	-	105*	-	-	-	-	1.4
6F6-G	-	-	225	245	-	-	-	16
5Y3-G	-	-	-	-	-	-	340	340

*Not true voltage, but as measured with voltmeter

Miscellaneous Service Notes

If a howling noise (sometimes referred to as Microphonic howl) is heard, it is very probably because the four red screws under the cabinet have not been removed, along with the two narrow metal strips between the chassis and the bottom of the cabinet. These strips and screws are only intended as additional bracing during shipment and must be removed before the receiver is put in operation.

The howl can also be caused by a defective tube, or when some part of the receiver which is rigidly fastened to the chassis rubs against the cabinet. The remedy is obvious.

©John F. Rider, Publisher

©John F. Rider, Publisher

PILOT RECEIVERS OF THE H-590 SERIES.

SERVICE DATA

Removal of the chassis from the cabinet, when necessary, is done as follows:-

1. Remove the power supply cord from the supply outlet.
2. Remove the knobs and felt washers from all shafts on the front of the cabinet. These knobs are all of the "push-on" type.
3. Remove the speaker cord from the socket on the speaker.
4. Remove the four mounting screws located under the cabinet, and carefully slide the chassis out of the cabinet.

Receiver Alignment — Equipment Required.

1. Signal Generator. One using fundamental frequencies for all the frequencies used in the receiver is preferred.
2. Output Meter. Generally a copper-oxide rectifier meter is the most convenient.
3. Dummy Antennas. .1 mfd condenser
   .0002 mfd mica condenser
   400 ohm non-inductive resistor

Alignment Connections — The posts marked D and G on the rear of the chassis should, in all following operations, be connected to the ground post of the signal generator.

Connect the "hot" post of the generator through the correct dummy antenna or condenser to the appropriate point as noted hereafter.

In all the measurements to follow, the output meter should be connected to the plate and screen grid terminals of the 6P6-G tube, through .1 mfd condensers, in any convenient manner.

Procedure — The Volume, Sensitivity and Tone Controls should all be turned to the extreme clockwise positions, before starting.

The location of all trimmers is shown in the accompanying figure.

IF Amplifier Alignment

Turn the Band Selector Switch to Band 3 and turn the ROTOR Dial to the low frequency end.

Connect the output meter as described under "Connections", and connect the "hot" post of the generator to the grid of the 6K8 tube through the .1 mfd condenser. See that none of the PIANO KEYS is down. Then proceed with the alignment as follows:-

1. Adjust the Signal Generator frequency to 455 kilocycles, and adjust the generator output to the lowest value which will give a readable signal on the output meter.
2. Adjust the screws 13, 14, 15, 16, 17 and 18, (see figure), for maximum reading of the output meter. Keep reducing the output from the generator if the output meter reading increases too much.

If the output of the generator to the receiver is too great, the alignment of the receiver will not be correct, as the AVC action will become too great, and the amplifier will appear broad in tuning.

It will seldom, if ever, be found necessary to more than touch up the alignment of the IF amplifier. Of course, if the amplifier adjustment screws have been tampered with, it will probably be necessary to completely realign the amplifier. In this case, connect the generator to the grid of the last IF amplifier tube, and then to the first IF amplifier tube, while aligning the transformers following these tubes. Always finish the alignment with the signal input to the 6K8 tube and, with this connection, readjust all screws in the IF amplifier, except the Discriminator trimmer #19.

A cathode ray oscilloscope is not necessary in making the above adjustments. One may be used, however, if desired.

If the receiver is placed in a noisy location when the above adjustments are being made, it may be convenient to reduce the sensitivity of the amplifier by means of the sensitivity control.

Discriminator Alignment — CAUTION: The discriminator compensator (19) has been accurately adjusted during manufacture. It will probably never need adjustment, even when tubes are replaced, and for these reasons should never be touched unless there is no doubt about its being out of adjustment, in which case, the following procedure should be followed carefully. The adjustment is quite critical and cannot be done correctly in a hasty manner.

1. Set compensator (19) at its minimum position. This is the setting when the screw slot is vertical and when the red half of the adjusting screw is at the left.
2. Tune the IF amplifier to 455 kc as described under "IF Amplifier Alignment".
3. With the signal generator connected to the grid of the 6K8 tube and with the output of the generator at a low value, note the reading of the output meter. Then very carefully turn compensator (19) until the output meter reading reaches a minimum value. That is the correct setting of this compensator.

It will be necessary to use a screw driver made from some insulating material in making this adjustment. If a metal tool is used, the adjustment will not be correct.

If the adjustment is not correctly made, the oscillator control tube will not function properly. It may even detune the oscillator instead of tuning it.

R.F. Alignment

Band 4 (Long-Wave) — Connect the "hot" terminal of the generator to the post marked "A" on the rear of the chassis, through the .0002 mfd condenser.

Set the generator frequency to 300 kc., and with the Band Selector Switch set to Band 4, turn the ROTOR dial to 300 kc. Adjust trimmer #1 for maximum reading of the output meter. Do likewise with trimmers #2 and #3. Then set the generator frequency to 175 kc., and the ROTOR dial to 175 kc. Adjust the long-wave trimmer #4 for maximum reading of the output meter, while "rocking" the gang condenser carefully back and forth. Then go back and repeat the 300 kc. alignment. Always keep the generator output as low as possible, and see that none of the PIANO keys are down.

Band 3 (Standard Broadcast) — Connections to the generator are the same for the alignment of this band as they are for Band 4, also the same dummy antenna is used.

Set the generator frequency to 1500 kc., and the ROTOR dial to the same frequency, with the band selector switch set to Band 3. Adjust trimmer #6 for maximum reading of the output meter. (This trimmer is adjusted by drawing the brass rod up or pushing it down with a hooked wire, and with a twisting motion. First loosen the lock nut). Then, without touching the tuning controls, adjust first trimmer #6 and then trimmer #7 for maximum reading of the output meter.

Next, set the generator frequency to 600 kc., and the ROTOR dial to approximately the same. Adjust trimmer #8 for maximum output reading while "rocking" the gang condenser. Then go back and repeat the 1500 kc., adjustment, and tighten the lock nut on trimmer #6.

Band 2 (Short-Wave) — Remove the .0002 mfd dummy antenna used in aligning Bands 3 and 4 and substitute the 400 ohm resistor.

Before aligning this band refer to the paragraph headed "Image Frequency".

Set the generator frequency to 9,000 kc., (9 mc) and also set the ROTOR dial to this frequency. Carefully adjust the oscillator trimmer #9 for maximum reading of the output meter. Be very careful that the trimmer is not set on the image frequency.

After the oscillator is set, trimmer #10 is adjusted, while slightly rocking the gang condenser, for greatest reading of the output meter, resetting trimmer #9 if necessary to keep the calibration correct.

The adjustments on this band are more critical than the similar ones on the lower frequency bands and must be more carefully made.

The above adjustments, at the high frequency end of the band, are the only ones to be made on this band.

Band 1 (Short-Wave) — Connections and dummy antenna are the same as on Band 2.

Set the generator, and the ROTOR dial to 24 mc. Adjust trimmer #11 for maximum reading of the output meter, when the lower frequency peak of the two which can be located, coincides with the 24 mc. calibration point on the dial. Then adjust trimmer #12, while "rocking" the gang condenser, until the maximum reading is obtained on the output meter, resetting trimmer #11 if necessary to keep the calibration correct.

These are the only adjustments on this band.

Image Frequency

All bands in this receiver, except Band 1 must be aligned with the oscillator frequency higher than the signal frequency. There can be no error in doing this on Bands 3 and 4. However, on the two high frequency bands it is possible to incorrectly adjust the alignment in this respect, and end up with the receiver aligned on what should be the Image Frequency.

The chances of doing this may be eliminated by adjusting the generator to the correct aligning frequency, and with sufficient output from the generator to pick up two signals with the receiver, separated by twice the Intermediate Frequency, set the dial on Band 2 to that one which comes in at the higher frequency marking of the ROTOR dial. That is, on Band 2 the two frequencies which will be picked up when the generator is set at 9 mc., will be at 9 mc. and at 8 mc., on the ROTOR dial. Adjust the oscillator trimmer so that the 9 mc. frequency one coincides with 9 mc., on the dial. Exactly the reverse is true on Band 1

D.C. SOCKET VOLTAGES

All voltages are those between the indicated tube terminal and the chassis, and are made with a 1000 ohm per volt voltmeter. Make measurements with no signal input to the receiver, Volume control set at minimum volume, and sensitivity control set at maximum sensitivity. Make sure the AC supply voltage is correct for the transformer tap being used when measuring these voltages.

	Socket Terminals							
Tube	1	2	3	4	5	6	7	8
6K8	-	-	+250	+90	-1.5	+100	-	+2.5
6J7	-	-	+230	+90	+5.0	-	-	+5.
6K7	-	-	+250	+90	+2.4	-	-	+2.4
6K7	-	-	+250	+90	+3.5	-	-	+3.5
6H6	-	-	-.25	-	-.25	-	-	-
6Q7	-	-	+58	-	-	-	-	+1.5
6P6	-	-	+225	+250	-	-	-	+16
5Y3G	-	+380	-	-	-	-	-	+380

In replacing the 6J7 frequency control tube, it will be found convenient to remove the two screws, holding the ROTOR dial shield, and move the shield so that the tube may be handled easier.

Miscellaneous Service Notes

If a howling noise (sometimes referred to as Microphonic howl) is heard, it is very probably because the four red screws under the cabinet have not been removed, along with the two narrow metal strips between the chassis and the bottom of the cabinet. These strips and screws are only intended as additional bracing during shipment and must be removed before the receiver is put in operation.

The howl can also be caused by a defective tube, or when some part of the receiver which is rigidly fastened to the chassis rubs against the cabinet. The remedy is obvious.

PILOT RADIO CO.

MODELS H594, H597
Schematic, Tuner
Parts

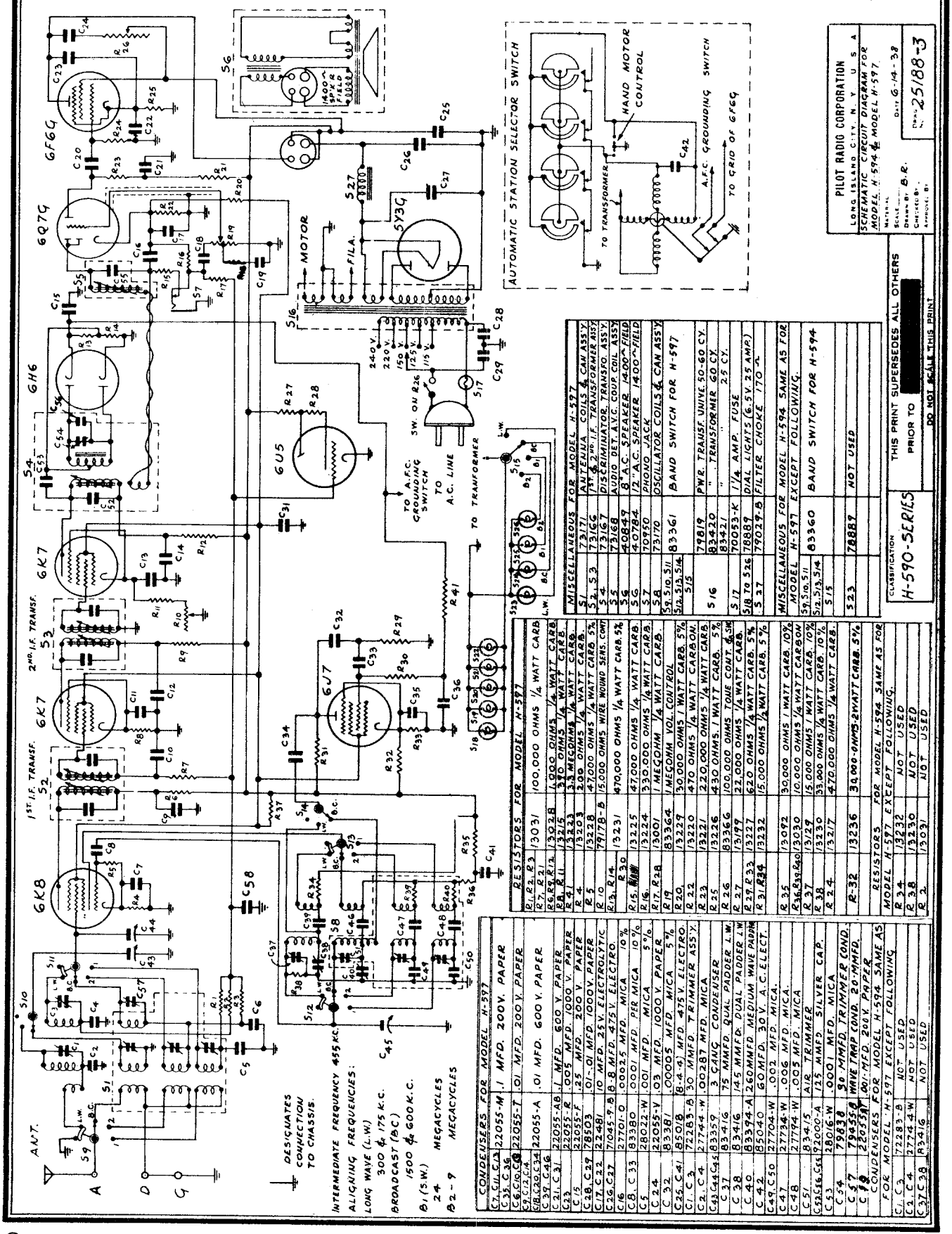

CONDENSERS FOR MODEL H-597		
C1, C11, C14	22055-M	.1 MFD. 200 V. PAPER
C35, C36		
C6, C10, C12	22055-T	.01 MFD. 200 V. PAPER
C9, C12, C24		
C18, C20, C34	22055-A	.01 MFD. 600 V. PAPER
C39, C46		
C21, C31	22055-AB	.1 MFD. 600 V. PAPER
C23	22055-R	.005 MFD. 1000 V. PAPER
C15	22055-F	.25 MFD. 200 V. PAPER
C28, C29	78503	.01-.01 MFD. 1000 V. PAPER
C17, C22	22481	10 MFD. 25 V. ELECTROLYTIC
C26, C27	7045-9-B	8-8 MFD. 475 V. ELECTRO.
C16	27701-0	.0002.5 MFD. MICA 10%
C8, C33	83380	.0001 MFD. PER MICA 10%
C5	28022-W	.001 MFD. MICA 5%
C24	22055-Y	.03 MFD. 1000 V. PAPER
C32	83381	.00005 MFD. MICA 5%
C25, C41	8508	8-4-4 MFD. 475 V. ELECTRO.
C1, C3	72283-B	30 MMFD. TRIMMER ASS'Y.
C2, C4	27744-W	.00287 MFD. MICA
C43, C44, C45	83359	3 GANG CONDENSER
C37	83416	75 MMFD. DUAL PADDER L.W.
C38	83416	145 MMFD. DUAL PADDER L.W.
C40	83394-A	260 MMFD. MEDIUM WAVE PADDER
C42	85040	60 MFD. 30 V. A.C. ELECT.
C49, C50	27704-W	.002 MFD. MICA.
C47	27734-W	.006 MFD. MICA.
C48	27744-W	.005 MFD. MICA
C51	83415	AIR TRIMMER
C52, C56, C57	92000-A	125 MMFD. SILVER CAP.
C53	28016-W	.0001 MFD. MICA
C54	79838	50 MMFD. TRIMMER COND.
C55	79455-B	WAVE TRAP COND. 20 MMFD.
C58	22055-N	.01 MFD. 200 V. PAPER

CONDENSERS FOR MODEL H-594 SAME AS FOR MODEL H-597 EXCEPT FOLLOWING:

C1, C3	72283-B	NOT USED
C2, C4	27744-W	NOT USED
C37, C38	83416	NOT USED

RESISTORS FOR MODEL H-597		
R1, R2, R3	13031	100,000 OHMS 1/4 WATT CARB.
R7, R21		
R6, R9, R14	13028	1,000 OHMS 1/4 WATT CARB.
R8, R11	13215	270 OHMS 1/4 WATT CARB.
R41	13223	3.3 MEGOHMS 1/4 WATT CARB.
R4	13203	2.00 OHMS 1/4 WATT CARB. 5%
R5	13228	47,000 OHMS 1/4 WATT CARB. 5%
R10	79178-B	15,000 OHMS WIRE WOUND SEMS. CONT
R13, R14, R30	13231	470,000 OHMS 1/4 WATT CARB. 5%
R15, R16	13225	47,000 OHMS 1/4 WATT CARB.
R16	13224	330,000 OHMS 1/4 WATT CARB.
R17, R28	13001	1 MEGOHM 1/4 WATT CARB.
R19	83364	1 MEGOHM VOL. CONTROL
R20	13229	30,000 OHMS 1 WATT CARB. 5%
R22	13220	470 OHMS 1/4 WATT CARBON.
R23	13221	220,000 OHMS 1/4 WATT CARB.
R25	13226	430 OHMS, 1 WATT CARB. 5%
R26	83366	100,000 OHMS TONE CONT. & SW.
R27, R33	13199	22,000 OHMS 1/4 WATT CARB.
R29, R32	13227	620 OHMS 1/4 WATT CARB. 5%
R31, R34	13232	15,000 OHMS 1/2 WATT CARB. 5%
R35	13092	30,000 OHMS 1 WATT CARB. 10%
R36, R39, R40	13030	10,000 OHMS 1/4 WATT CARBON
R37	13129	15,000 OHMS 1 WATT CARB. 10%
R38	13230	33,000 OHMS 1/4 WATT CARB. 10%
R24	13217	470,000 OHMS 1/4 WATT CARB.
R32	13236	30,000 OHMS 2 WATT CARB. 5%

RESISTORS FOR MODEL H-594 SAME AS FOR MODEL H-597 EXCEPT FOLLOWING:

R34	13232	NOT USED
R38	13230	NOT USED
R2	13031	NOT USED

MISCELLANEOUS FOR MODEL H-597		
S1, S3	73171	ANTENNA COILS & CAN ASS'Y.
S2, S4	73166	OSC. & I.F. TRANSFORMER ASS'Y.
S5	73167	DISCRIMINATOR TRANSFO. ASS'Y.
S6	73168	AUDIO DET. A.V.C. COUP. COIL ASS'Y.
S9	40849	8" A.C. SPEAKER 1400~FIELD
S6	40784	12" A.C. SPEAKER 1400~FIELD
S7	70950	PHONO JACK
S8	73170	OSCILLATOR COILS & CAN ASS'Y.
S9, S10, S11	83361	BAND SWITCH FOR H-597
S12, S13, S14, S15		
S16	79819	PWR. TRANSF. UNIVS. 50-60 CY.
	83420	" TRANSFORMER 60 CY.
	83421	" 25 CY.
S17	70053-K	1/4 AMP. FUSE
S18 TO S26	78889	DIAL LIGHTS (6.5 V. 25 AMP.)
S27	79029-B	FILTER CHOKE 170 Ω

MISCELLANEOUS FOR MODEL H-594 SAME AS FOR MODEL H-597 EXCEPT FOLLOWING.		
S9, S10, S11	83360	BAND SWITCH FOR H-594
S12, S13, S14		
S15		
S23	78887	NOT USED

CLASSIFICATION H-590-SERIES

THIS PRINT SUPERSEDES ALL OTHERS PRIOR TO [redacted]

DO NOT SCALE THIS PRINT

PILOT RADIO CORPORATION
LONG ISLAND CITY, N.Y. U.S.A.
SCHEMATIC CIRCUIT DIAGRAM FOR MODEL H-594 & MODEL H-597
MATERIAL
SCALE
DRAWN BY B.R.
CHECKED BY
APPROVED BY
DATE 6-14-38
DRAW. NO. 25188-3

©John F. Rider, Publisher

MODELS H594, H597
Socket, Trimmers
Specifications

PILOT RADIO CO.

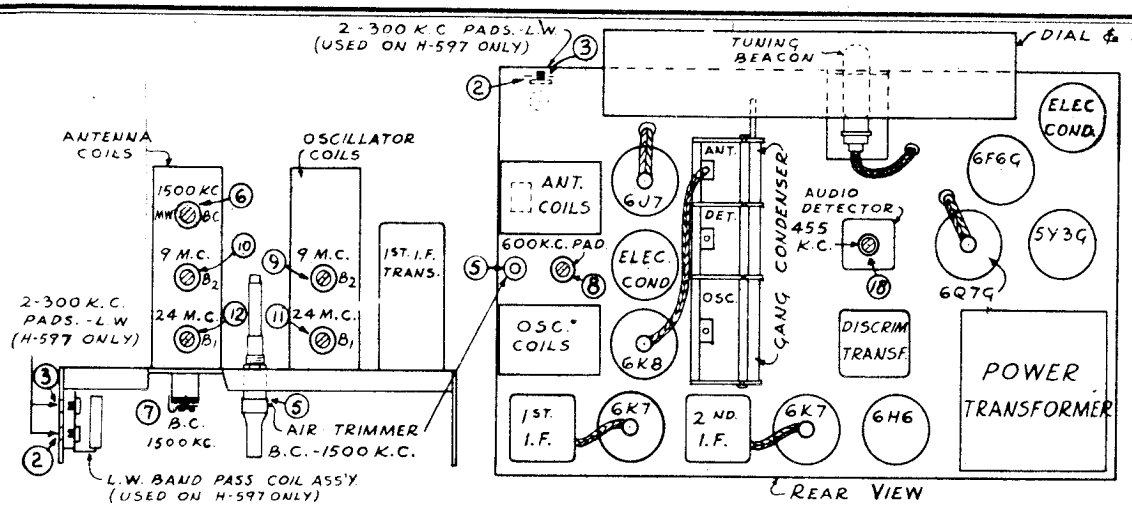

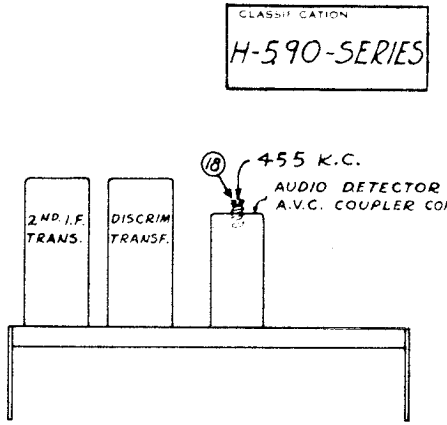

LEFT SIDE OF CHASSIS — TOP VIEW OF CHASSIS — RIGHT SIDE OF CHASSIS

Circuit Super-Heterodyne, with class A output stage, and with Automatic Frequency Control of the oscillator on the Standard Broadcast Band and on the Long-Wave Band where this band is incorporated. An R.F. Pre-selector is incorporated in the Broadcast and Long Wave Bands. Iron Core, Permeability Tuned IF and Discriminator Transformers, which use, in addition, Silver-Mica Condensers.

Other features of the Receiver are:- Continuously variable Tone Control, Tone Compensated Volume Control, Visible Indicators on all controls, Motor operated PIANO-TUNING on the Broadcast and Long-Wave bands. Manual Tuning is instantly available without extra switching. Motor Tuning, without the keys is also available on all bands. These receivers are supplied with a fuse in the power supply circuit, and a jack is provided for plugging in a high impedance phonograph pick-up.

PILOTUBES Required 9 in all as follows

One 6K8	1st detector-oscillator.
One 6J7	Oscillator frequency control.
Two 6K7	IF amplifiers.
One 6H6	Discriminator.
One 6Q7	2nd Detector - AVC - 1st Audio Amplifier.
One 6F6-G	Output Tube.
One 6U5	Cathode Ray Tuning Beacon.
One 5Y3-G	Power supply rectifier.

Power Supply

Voltage	Frequency	Watts
117.5	60 cycles	90
115, 125, 150, 220, 240 * Universal Transformer	60 cycles	90

* (Not supplied in the United States).

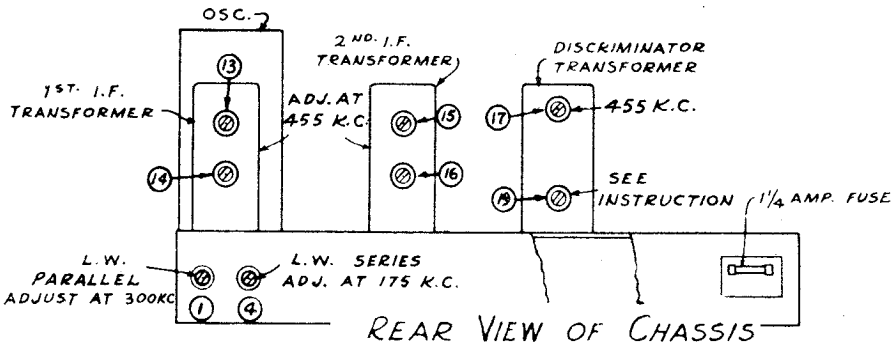

REAR VIEW OF CHASSIS

Intermediate Frequency 455 Kilocycles.

Panel Controls 12 PIANO-TUNING Keys, Volume Control, Tone Control with On-Off switch, Band Selector Switch, and Motor and Manual Tuning Controls.

Tuning Ranges
H-594 Chassis

Band 1	24.8	to	9.6 mc	or	12.09	to	31.23 meters
Band 2	9.9	to	2.9 mc	or	30.8	to	103.4 meters
Band 3	1725	to	510. kc	or	178.	to	588. meters

In addition to the above ranges the H-597 chassis, which is not sold in the United States, has the following Long-Wave Band.

Band 4	375	to	145 kc	or	800	to	2069 meters

Maximum Power Output 5.8 watts

PILOT RADIO CORPORATION
LONG ISLAND CITY, N.Y. U.S.A.
TRIMMER LAYOUT
Material
Scale
Drawn By B.R.
Checked By
Approved By
Date 6-16-38
Dwg. No. 25187

©John F. Rider, Publisher

PILOT RADIO CO.

MODELS H664, H665
Schematic, Parts

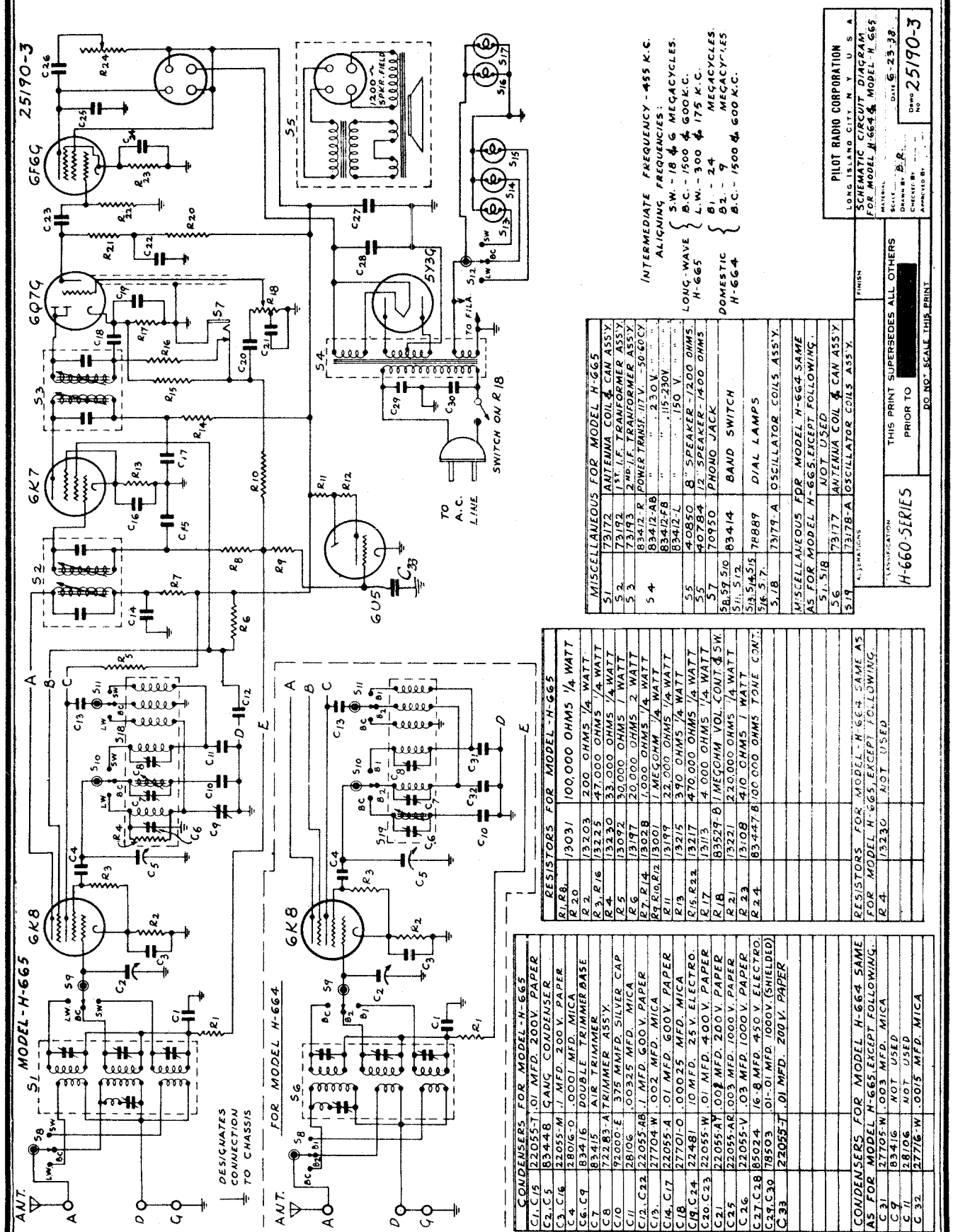

CONDENSERS FOR MODEL H-665		
C1, C15	22055-T	.01 MFD. 200V. PAPER
C2, C5	83448	GANG CONDENSER
C3, C16	22055-M	.1 MFD. 200 V. PAPER
C4	28016-0	.0001 MFD. MICA
C6, C9	83416	DOUBLE TRIMMER BASE
C7	83415	AIR TRIMMER
C8	722B3-A	TRIMMER ASS'Y.
C10	92000-E	.375 MMFD. SILVER CAP
C11	28106	.00325 MFD. MICA
C12, C22	22055-AB	.1 MFD. 600 V. PAPER
C13	27704-W	.002 MFD. MICA
C14, C17	22055-A	.01 MFD. 600 V. PAPER
C18	27701-0	.00025 MFD. MICA
C19, C24	22481	10 MFD. 25 V. ELECTRO.
C20, C23	22055-W	.01 MFD. 400 V. PAPER
C21	22055-AV	.002 MFD. 200 V. PAPER
C25	22055-AR	.003 MFD. 1000 V. PAPER
C26	22055-V	.03 MFD. 1000 V. PAPER
C27, C28	85024	16-8 MFD. 450 V. ELECTRO.
C29, C30	78503	.01-.01 MFD. 1000 V. (SHIELDED)
C33	22055-T	.01 MFD. 200 V. PAPER

CONDENSERS FOR MODEL H-664 SAME AS FOR MODEL H-665, EXCEPT FOLLOWING.		
C31	27705-W	.003 MFD. MICA
C9	83416	NOT USED
C11	28106	NOT USED
C32	27716-W	.0015 MFD. MICA

RESISTORS FOR MODEL H-665		
R1, R8	13031	100,000 OHMS 1/4 WATT
R2	13203	200 OHMS 1/4 WATT
R3, R16	13225	47,000 OHMS 1/4 WATT
R4	13230	33,000 OHMS 1/4 WATT
R5	13092	30,000 OHMS 2 WATT
R6	13197	20,000 OHMS 2 WATT
R7, R14	13028	1,000 OHMS 1/4 WATT
R9, R10, R12	13001	1 MEGOHM 1/4 WATT
R11	13199	22,000 OHMS 1/4 WATT
R13	13215	390 OHMS 1/4 WATT
R15, R22	13217	470,000 OHMS 1/4 WATT
R17	13113	4,000 OHMS 1/4 WATT
R18	83529-B	1 MEGOHM VOL. CONT. & SW.
R21	13221	220,000 OHMS 1/4 WATT
R23	13108	410 OHMS 1 WATT
R24	83447-B	100,000 OHMS TONE CONT.

RESISTORS FOR MODEL H-664 SAME AS FOR MODEL H-665, EXCEPT FOLLOWING.		
R4	13230	NOT USED

MISCELLANEOUS FOR MODEL H-665		
S1	73172	ANTENNA COIL & CAN ASS'Y.
S2	73192	1ST I.F. TRANFORMER ASS'Y.
S3	73193	2ND I.F. TRANFORMER ASS'Y.
S4	83412-R	POWER TRANSF. 117V. 50-60 CY.
	83412-AB	" " 230 V.
	83412-FB	" " 115-230V
	83412-L	" " 150 V.
S5	40850	8" SPEAKER - 12,00 OHMS
S5	40784	12" SPEAKER - 1400 OHMS
S7	70950	PHONO JACK
S8, S9, S10, S11, S12	83414	BAND SWITCH
S13, S14, S15, S16, S17	78889	DIAL LAMPS
S18	73179-A	OSCILLATOR COILS ASS'Y.

MISCELLANEOUS FOR MODEL H-664 SAME AS FOR MODEL H-665, EXCEPT FOLLOWING.		
S1, S18		NOT USED
S6	73177	ANTENNA COIL & CAN ASS'Y.
S19	73178-A	OSCILLATOR COILS ASS'Y.

©John F. Rider, Publisher

MODELS H664, H665
Socket, Trimmers
Voltage, Specs.

PILOT RADIO CO.

D.C. SOCKET VOLTAGES

All voltages are those between the indicated tube terminal and the chassis, and are made with a 1000 ohm per volt voltmeter. Make measurements with no signal input to the receiver and with the volume control set at minimum volume.

Make sure that the A.C. supply voltage is correct for the transformer tap being used at the time of measurement.

SOCKET TERMINALS

Tube	1	2	3	4	5	6	7	8
6K8	-	-	240	95	-	110	-	2.8
6K7	-	-	240	95	3.3	-	-	3.3
6Q7	-	-	105*	-	-	-	-	1.4
6F6-G	-	-	225	245	-	-	-	16
5Y3-G	-	-	-	-	-	-	340	340

*Not true voltage but as measured with voltmeter

CLASSIFICATION H-660-SERIES

TRIMMER LAYOUT
MATERIAL
SCALE
DATE 6-24-38
DRAWN BY B.R.
CHECKED BY
APPROVED BY
DRWG NO 25191

FOR ALIGNMENT SEE INDEX

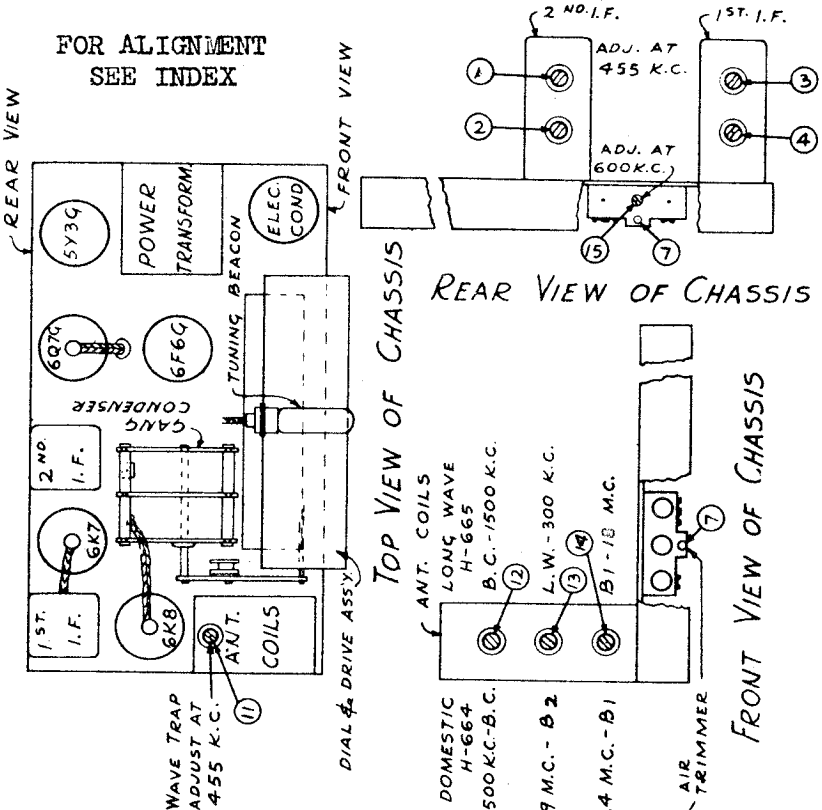

Panel Controls Volume with On-Off Switch, Tone, Band Selector Switch, Manual Tuning Control, and an 8 key mechanically operated PIANO TUNING mechanism, with key locking knob.

Maximum Power Output 4.8 watts.

Tuning Ranges The model H-664 Chassis has the following tuning ranges:

Band 1	24.8	to	8.3 mc	or	12.09	to 36.12 meters
Band 2	9.7	to	2.9 mc	or	30.9	to 103.4 meters
Band 3	1725	to	530 kc	or	174	to 566 meters

The model H-665 Chassis has the following tuning ranges:

Band 1	18.8	to	5.35 mc	or	15.9	to 56.04 meters
Band 2	1725	to	530 kc	or	174	to 566 meters
Band 3	375	to	145 kc	or	800	to 2069 meters

GENERAL SPECIFICATIONS.

Circuit Super-Heterodyne, with Class A output stage. Three tuning ranges as listed below. Permeability tuned IF transformers. Tone compensated volume control, Continuously variable tone control, Automatic Volume Control and Cathode Ray Tuning Beacon.

PILOTUBES Required One 6K8 1st detector-oscillator, one 6K7 IF amplifier, one 6Q7 2nd detector-AVC-1st audio amplifier, one 6F6-G output tube, one 6U5 cathode ray tuning beacon, one 5Y3-G power supply rectifier. Total 6 tubes.

Power Supply Voltage	Frequency	Watts
110 to 125 volts	60	60
150 volts	60	60
220 to 240 volts	60	60
110 to 125 or 220 to 240 volts	60	60

Intermediate Frequency 455 kilocycles

©John F. Rider, Publisher

©John F. Rider, Publisher

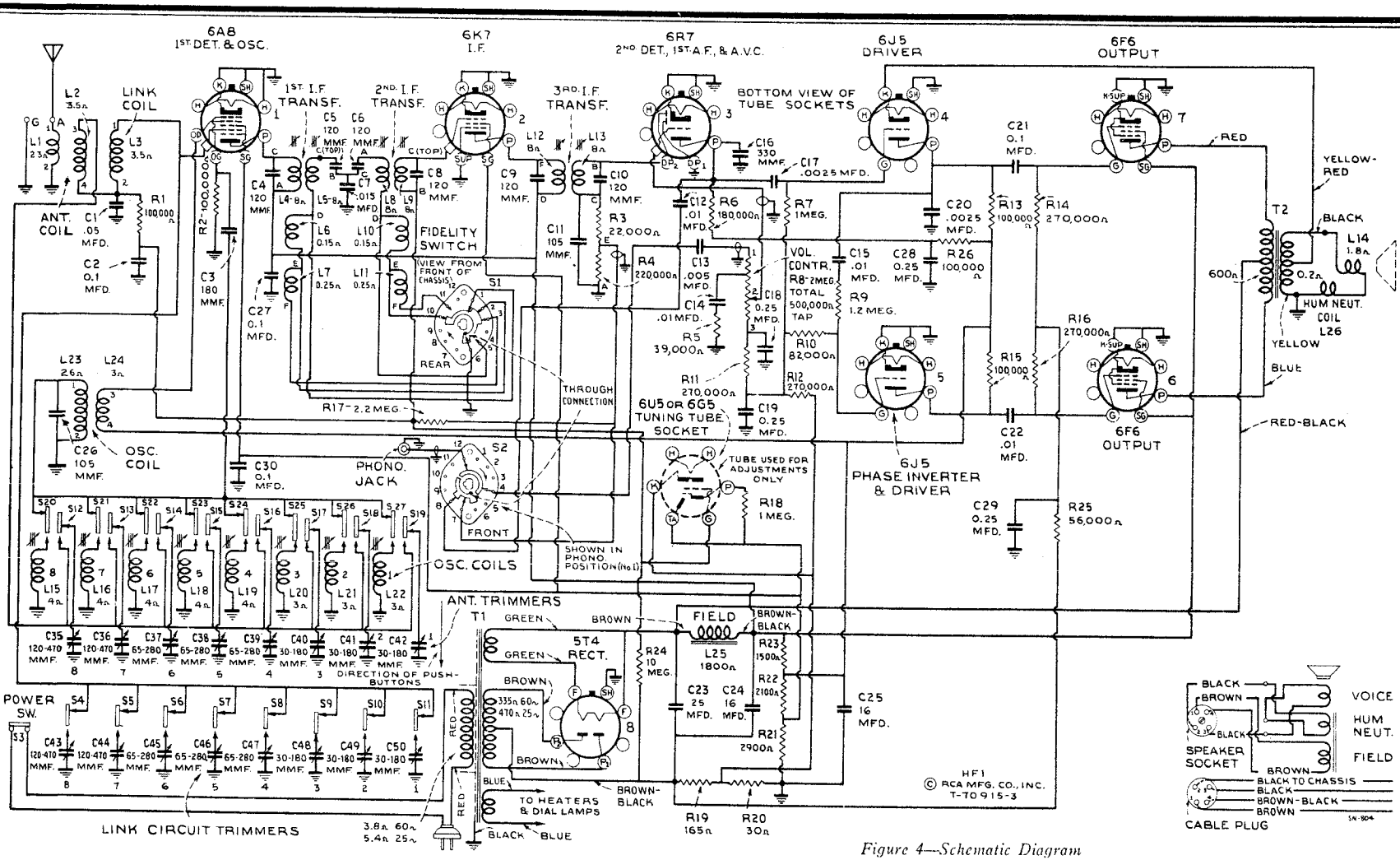

Figure 4—Schematic Diagram

IF PEAK 455 KC

Purpose and Function of the Six Positions on Fidelity Switch

No. 1	Phono operation, with minimum high-frequency response.	Connects phono to high side of volume control. Connects C12 (.01 mfd) from plate of 1st-a.f. tube to chassis. Disconnects radio by short-circuiting diode load R4.
No. 2	Phono operation, with maximum high-frequency response.	Same as position No. 1 except that C12 is disconnected.
No. 3	Radio operation, with maximum selectivity, minimum high-frequency response and minimum fidelity.	Short-circuits phonograph. Connects diode load to high side of volume control. Connects C12 (.01 mfd) from plate of 1st-a.f. tube to chassis. Grounds low end of L5 and L8.
No. 4	Radio operation, with maximum selectivity.	Same as position No. 3 except that C12 is disconnected, resulting in more highs than position 3.
No. 5	Radio operation, with medium selectivity and medium fidelity.	Same as position 4 except that ground is moved from L5 and L8 to low end of L6 and L10.
No. 6 (clockwise)	Radio operation, with minimum selectivity and full-range fidelity.	Same as position 5 except that ground is moved from L6 and L10 to low end of L7 and L11.

MODEL HF-1
Socket, Trimmers, Voltage Chassis Wiring, Specs, Notes

RCA MFG. CO., INC.

Frequency Range ..... 540-1,550 kc
2 Stations between approx. 540-1,160 kc (buttons 7 and 8)
3 Stations between approx. 630-1,230 kc (buttons 4, 5, and 6)
3 Stations between approx. 780-1,550 kc (buttons 1, 2, and 3)
Intermediate Frequency ..... 455 kc

A socket is provided for an RCA-6U5 or 6G5 "Magic Eye" Tuning Tube, to facilitate adjustments for electric tuning.

Pilot Lamp ..... Mazda No. 46, 6.3 volts, 0.25 amps.

POWER SUPPLY RATINGS

Rating A ..... 105-125 volts, 50-60 cycles, 115 watts
Rating B ..... 105-125 volts, 25-60 cycles, 115 watts

POWER OUTPUT

Undistorted ..... 10 watts
Maximum ..... 12 watts

LOUDSPEAKER

Type ..... 12-inch Electrodynamic
Impedance (v.c.) ..... 2.25 ohms at 400 cycles

Precautionary Lead Dress and Replacement of Parts

1. The green lead from the antenna coil to the switch, and the green lead from the link coil to the switch, should be dressed away from the oscillator coils, and free of other leads, chassis, and parts.

2. When replacing a dual trimmer, it must be installed so that the top plate (to which the adjustment screws make contact) is the ground side. This is particularly important on C39-C40, and C47-C48, because the sections of these trimmers are of different capacity range and must be correctly oriented in the receiver. Grounding the top plate takes care of this.

3. Maintain color coding on output transformer (T2) as shown in the schematic diagram. This is necessary in order to obtain correct inverse-feedback action.

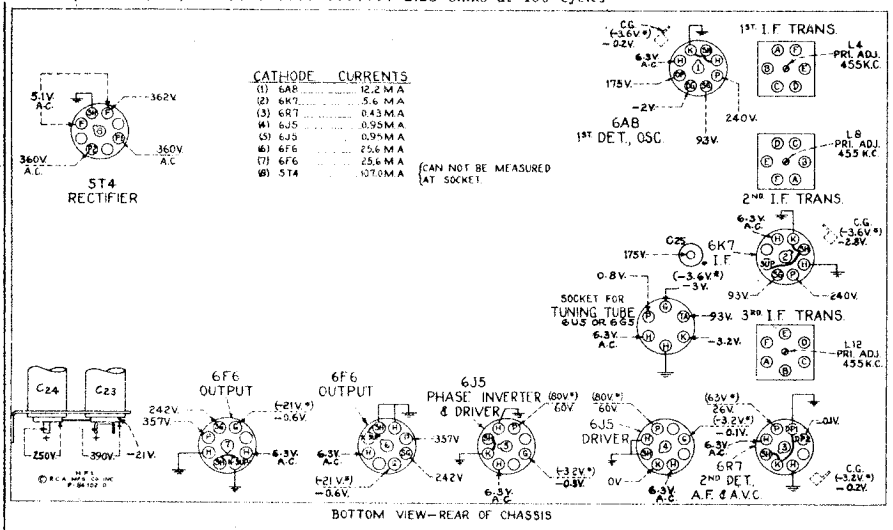

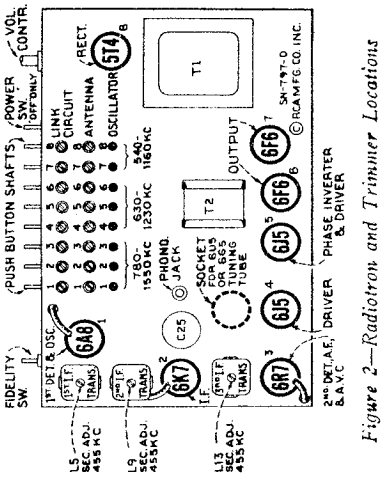

Figure 2—Radiotron and Trimmer Locations

Figure 5—Radiotron Socket Voltages

*** Note:** Values with star (*) are operating voltages. Values not starred are actual measured voltages.

Measurements made to chassis unless otherwise indicated and with Magic Eye in socket.

Measurements made with all push buttons out, volume control turned to minimum, using 1,000-ohm-per-volt meter, having ranges of 10, 50, 250, and 500 volts. (Use range above the specified measured voltage.)

Values should hold within approximately ± 20% for 117-volt, 60-cycle supply.

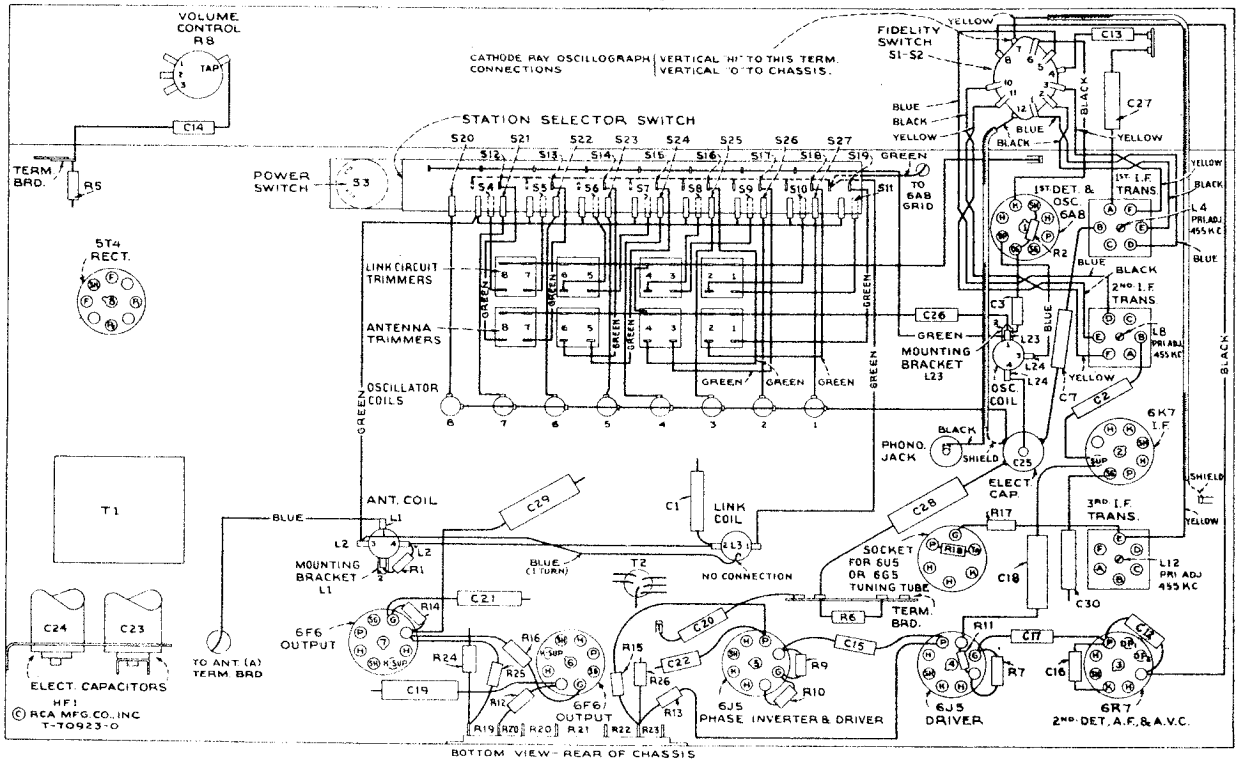

Figure 3—Component Parts Location and R-F Wiring Diagram

©John F. Rider, Publisher

MODEL HF-1
Alignment
Parts, Tuner

RCA MFG. CO., INC.

I-F Alignment Procedure

Cathode-ray Alignment is the recommended method for Model HF1. Connections for the oscillograph are shown in the chassis drawing.

Output Meter Alignment.—If an output meter is used, connect it across the voice coil, and turn the receiver volume control to maximum.

Test-oscillator.—For all alignment operations connect the low side of the test-oscillator to the receiver chassis, and keep the output as low as possible to avoid a-v-c action.

For additional details, refer to booklet "RCA Victor Receiver Alignment".

Push in button 8, and adjust the No. 8 trimmers and core to a quiet point near 600 kc. Leave the button pushed in for the following operations:

Steps	Connect the high side of test-oscillator to—	Tune test-osc. to—	Turn Fidelity switch to—	Adjust the following for max. peak and symmetry—
No. 1	6K7 I-F grid cap, in series with .001 mfd.	455 kc (20 kc sweep)	— — — —	L12 and L13 (3rd I-F transf.) (Refer to curve "A")
No. 2	6A8 1st-det. grid cap, in series with .001 mfd.	455 kc (20 kc sweep)	Position 4 (from left)	Turn L4 and L5 (1st I-F) out as far as possible. Peak L8 and L9 (2nd I-F), and then L5 and L4. Readjust L8 and L9 slightly if necessary. (Refer to curve "B")
No. 3	Turn selectivity switch to position 5. Response should be like curve "C".			
No. 4	Turn selectivity switch to position 6 (full clockwise). Response should be like curve "D".			
No. 5	Follow "Adjustments for Electric Tuning".			

The No. 6 position (knob turned full clockwise) on the fidelity switch provides minimum selectivity and maximum fidelity. This position of the switch may be used for full-range reproduction of the majority of local stations, but occasionally (due to the present 10 kc station spacing), an adjacent channel signal will cause a 10 kc beat or "monkey chatter." Turning back the fidelity switch to position 5, 4 or 3 will eliminate this condition, at the expense of high-fidelity reproduction. (An example of possible "monkey chatter" is found in the case of WOR at 710 kc. and WLW at 700 kc.)

Adjustments for Electric Tuning

1. Make a list of the desired eight stations, arranged in order from high to low frequencies. It is preferable to select strong local high-quality stations within a radius of 100 miles.
2. Insert an RCA-6U5 or 6G5 Magic Eye tube in the six-prong socket on the chassis. Use an insulated screwdriver or alignment tool (such as RCA Stock No. 31031) for all adjustments. LEAVE THE FIDELITY SWITCH IN POSITION 3 OR 4 WHILE MAKING ADJUSTMENTS FOR ELECTRIC TUNING.
3. Remove the antenna lead-in from the "A" terminal and wrap it once around the green lead to the top cap of the 6A8 tube. (This provides capacity coupling between the antenna and the 6A8 grid.)
4. Push in button No. 1 and turn oscillator core No. 1 to bring in the first station on the list. Adjust the core carefully for peak output as indicated by the Magic Eye. Adjust link trimmer No. 1 for max. output.
5. Remove the antenna lead-in from the 6A8 grid lead and connect the lead-in to the "A" terminal. Adjust antenna trimmer No. 1 and link trimmer No. 1 for peak output as indicated by the Magic Eye.

(Clockwise rotation of cores and trimmers tunes the circuits to lower frequencies, and counter-clockwise adjustment tunes the circuits to higher frequencies.)

6. Push in button No. 2. Adjust oscillator core No. 2, antenna trimmer No. 2, and link trimmer No. 2 for the second station in the same manner.
7. Follow the same procedure for the remaining stations.
8. After tuning in eight stations as specified above, leave the antenna lead-in connected to the "A" terminal, and carefully re-adjust each of the oscillator cores for peak output on the respective stations.
9. After the set is installed and connected to the customer's antenna, make a final readjustment of the antenna and link trimmers.
10. The Magic Eye should be removed from the chassis after completion of the electric-tuning adjustments.

Curve "A" Input to I-F grid.

Curve "B" Input to 1st-det. grid, fidelity switch at position 4 (from left).

Curve "C" Input to 1st-det. grid, fidelity switch at position 5 (from left).

Curve "D" Input to 1st-det. grid, fidelity switch at position 6 (full clockwise).

Figure 1—Approximate I-F Response Curves

STOCK No.	DESCRIPTION	Unit List Price
	RECEIVER ASSEMBLIES	
13216	Board—Antenna and ground terminal board	.25
30314	Cap—Grid contact cap	.03
12581	Cap—Shield cap for first or third I.F. transformers	.25
12607	Cap—Shield cap for second I.F. transformers	.20
30750	Capacitor—Adjustable dual trimmer 30-180 Mmfd. (C41, C42, C49, C50)	.45
31066	Capacitor—Adjustable dual trimmer 30-180 Mmfd. and 65-280 Mmfd. (C39, C40, C47, C48)	.45
30764	Capacitor—Adjustable dual trimmer 65-280 Mmfd. (C37, C38, C45, C46)	.45
30765	Capacitor—Adjustable dual trimmer 120-470 Mmfd. (C35, C36, C43, C44)	.50
30769	Capacitor—105 Mmfd. (C26)	.40
30904	Capacitor—105 Mmfd. (C11)	.25
12404	Capacitor—120 Mmfd. (C4, C5, C6, C8, C9, C10)	.30
13003	Capacitor—180 Mmfd. (C3)	.25
12952	Capacitor—330 Mmfd. (C16)	.25
5107	Capacitor—.0025 Mfd. (C17, C20)	.20
4838	Capacitor—.005 Mfd. (C13)	.25
14393	Capacitor—.01 Mfd. (C12, C14, C15, C22)	.30
11315	Capacitor—.015 Mfd. (C7)	.20
4886	Capacitor—.05 Mfd. (C1)	.20
4839	Capacitor—0.1 Mfd. (C2, C21, C27, C30)	.30
12484	Capacitor—0.25 Mfd. (C18, C19, C28, C29)	.30
30105	Capacitor—16 Mfd. (C25)	1.55
5212	Capacitor—16 Mfd. (C24)	1.35
14531	Capacitor—25 Mfd. (C23)	1.55
31068	Coil—Link coil (L3)	.60
31069	Coil—Antenna coil (L1, L2)	.85
30749	Coil—Oscillator coil (L15, L16)	.60
30748	Coil—Oscillator coil (L17, L18, L19)	.60
30747	Coil—Oscillator coil (L20, L21, L22)	.60
31067	Coil—Oscillator coil (L23, L24)	.85
5040	Connector—4-contact female speaker connector	.30
30846	Core—Adjustable core and stud for oscillator coils	.30
12006	Core—Adjustable core and stud for I.F. transformers	.15
5226	Lamp—Pilot lamp	.17
30865	Resistor—Voltage divider comprising one 1,500 ohm, one 2,100 ohm, one 2,900 ohm, two 15 ohm, and one 165 ohm sections (R19, R20, R21, R22, R23)	1.10
14284	Resistor—22,000 ohms, 1/10 watt (R3)	.15
12266	Resistor—39,000 ohms, ½ watt (R5)	.20
12286	Resistor—56,000 ohms, ½ watt (R25)	.20
12719	Resistor—82,000 ohms, 1/10 watt (R10)	.15
14560	Resistor—100,000 ohms, ½ watt (R1, R2, R13, R15, R26)	.20
13698	Resistor—180,000 ohms, ½ watt (R6)	.20
11398	Resistor—220,000 ohms, 1/10 watt (R4)	.15
12199	Resistor—270,000 ohms, ½ watt (R11, R12, R14, R16)	.20
13730	Resistor—1 meg., ½ watt (R18)	.20
12013	Resistor—1 meg., 1/10 watt (R7)	.15
31056	Resistor—1.2 meg., 1/10 watt (R9)	.15
12679	Resistor—2.2 meg., ½ watt (R17)	.20
13601	Resistor—10 meg., ½ watt (R24)	.20
12007	Spring—Retaining spring for core Stock Nos. 12006 and 30846	.15
12110	Shield—Radiotron shield cap	.14
14278	Socket—Phonograph socket	.25
14171	Socket—Pilot lamp socket	.40
4786	Socket—Adjustment eye socket	.25
11196	Socket—Radiotron socket (8-contact)	.25
31061	Switch—Selectivity and tone control switch (S1, S2)	.95
31070	Switch—Station selector and on-off switch—less push buttons (S3, S4, S5, S6, S7, S8, S9, S10, S11, S12, S13, S14, S15, S16, S17, S18, S19, S20, S21, S22, S23, S24, S25, S26, S27)	4.60
31063	Transformer—First I.F. transformer (L4, L5, L6, L7, C5, C4)	2.25
31064	Transformer—Second I.F. transformer (L8, L9, L10, L11, C6, C8)	2.25
31065	Transformer—Third I.F. transformer (L12, L13, C9, C10, C11, R3, R4)	2.50
31062	Transformer—Output transformer (T2)	2.30
11211	Transformer—Power transformer 105-120 volts, 50-60 cycle (T1)	8.00
11212	Transformer—Power transformer 105-120 volts, 25-60 cycle (T1)	11.65
31060	Volume Control (R8)	1.50
	REPRODUCER ASSEMBLIES (Speaker RL70E-4)	
13866	Cap—Dust cap for cone center	.03
11234	Coil—Field coil (L25)	3.85
11469	Coil—Neutralizing coil (L26)	.30
12667	Cone—Reproducer cone, voice coil, center suspension, and dust cap (L14)	1.95
5039	Plug—4-contact male plug for reproducer	.30
31072	Reproducer complete	10.35
14357	Washer—Spring washer to hold field coil securely	.06
	MISCELLANEOUS ASSEMBLIES	
31074	Button—Push button for on-off switch	.07
30981	Button—Push button for station selector switch	.10
13103	Cap—Pilot lamp cap	.15
31095	Discs—10 celluloid protector discs for call-letter markers	.10
31073	Escutcheon—Push button escutcheon	.85
14269	Knob—Volume control or selectivity and tone switch knob	.20
31028	Marker—Station call letter markers for push buttons	.40
31048	Plug—2-contact male plug for phono jack	.15
14270	Spring—Retaining spring for knob Stock No. 14269	.05

ALL PRICES ARE SUBJECT TO CHANGE OR WITHDRAWAL WITHOUT NOTICE.

©John F. Rider, Publisher

MODELS HF-2,HF-4,U130
Tuner Adjustments
Specs.

RCA MFG. CO., INC.

Pilot Lamps: (4) ..... 3—6.3 V., 0.25 Amp. Mazda No. 44; 1—6.3 V., 0.15 Amp. Mazda No. 47

Power Supply Ratings (Model U-130)		Radio Only	Total
Rating A6	105-125 volts,	60 cycles, 125 watts	150 watts
Rating A	105-125 volts,	50-60 cycles, 125 watts	150 watts
Rating B2	105-125 volts,	25 cycles, 125 watts	150 watts
Rating C6	105-130/140-160/200-250 volts,	60 cycles, 125 watts	150 watts
Rating C	105-130/140-160/200-250 volts,	50-60 cycles, 125 watts	150 watts

Power Supply Ratings (Models HF-2 and HF-4)

Rating A ..... 105-125 volts, 50-60 cycles, 125 watts
Rating B ..... 105-125 volts, 25- cycles, 125 watts
Rating C ..... 100-130/140-160/195-250 volts, 50-60 cycles, 125 watts

Power Output

Undistorted ..... 10 watts
Maximum ..... 12 watts

ADJUSTMENTS FOR ELECTRIC TUNING

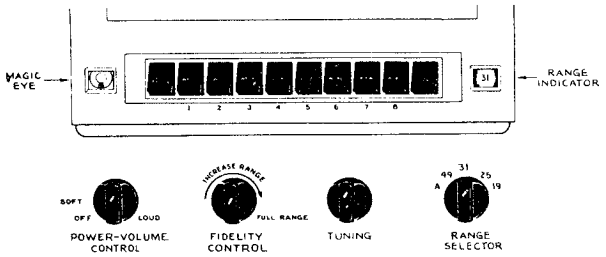

Figure 1—Location of Controls

The left-hand push-button is a Victrola-Attachment switch. The right-hand push-button is for dial tuning.

1. Make a list of the desired eight stations, arranged in order from low to high frequencies.
2. Turn range selector to "A" band, turn power on, and allow a few minutes for warming up.
3. Turn Fidelity Control maximum counter-clockwise.
4. Press down the "dial-tuning" (right-hand) button.
5. Manually tune in the first station on the list, using the "Magic Eye" for accurate tuning.
6. Hold down the "dial-tuning" button, and press down station button No. 1 (second from left). Both buttons will stay down, central dial lamp will light brightly or dully, depending on which side of disc, contact is. Move station-setting contact No. 1 to the insulating line on the disc at rear of gang. When the contact is correctly centered on the insulating line, the central dial lamp will go out.
7. Press down any other button in order to release the dial-tuning button and station button No. 1. Then press down station button No. 1 again. The electric tuning mechanism will function to tune in the station, and the central dial lamp will stay on.
8. Repeat this process for the remaining stations.

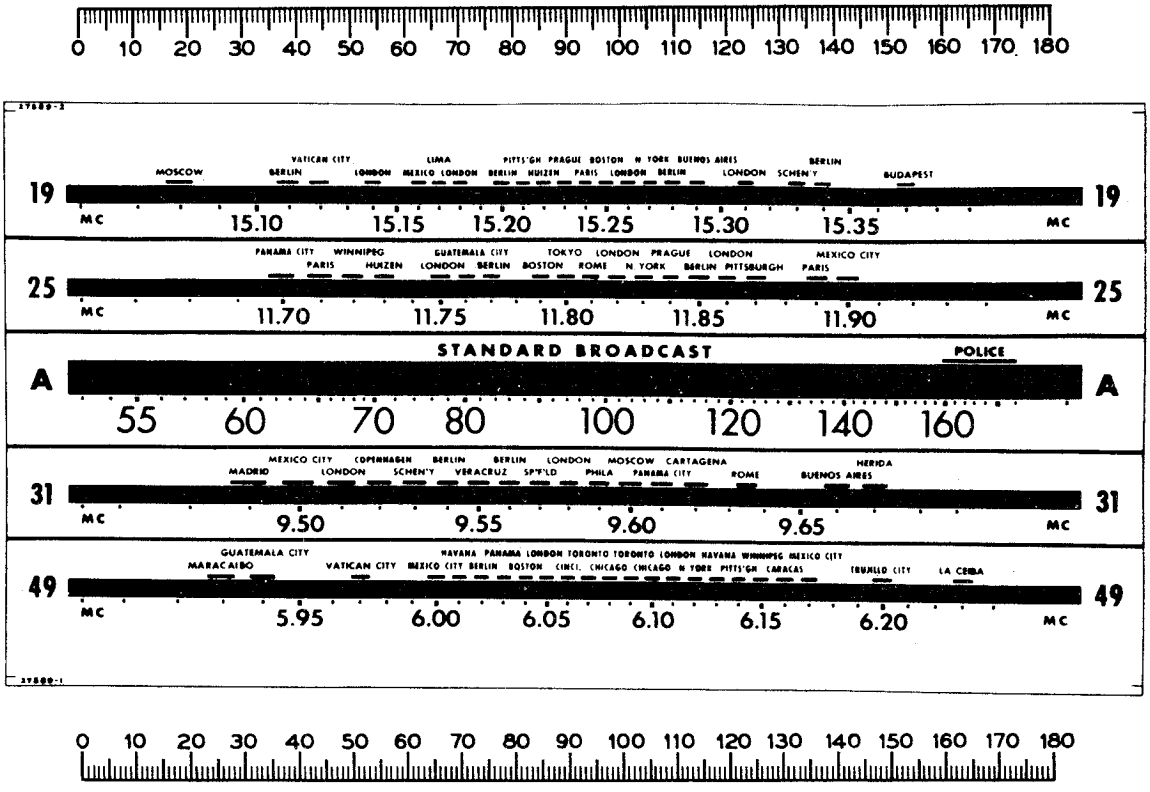

Figure 2—Reduced Reproduction of Receiver Dial, and Corresponding 0-180° Calibration Scales

The corresponding position of the dial indicator for any setting of the calibration scale can be determined by drawing a line from this point on the bottom calibration scale to the same point on the top calibration scale. For example 90° on the calibration scale corresponds approximately to 11.8 mc on the 25-meter band, and 940 kc on "A" band, etc. Read instructions under "Alignment Procedure."

©John F. Rider, Publisher

©John F. Rider, Publisher

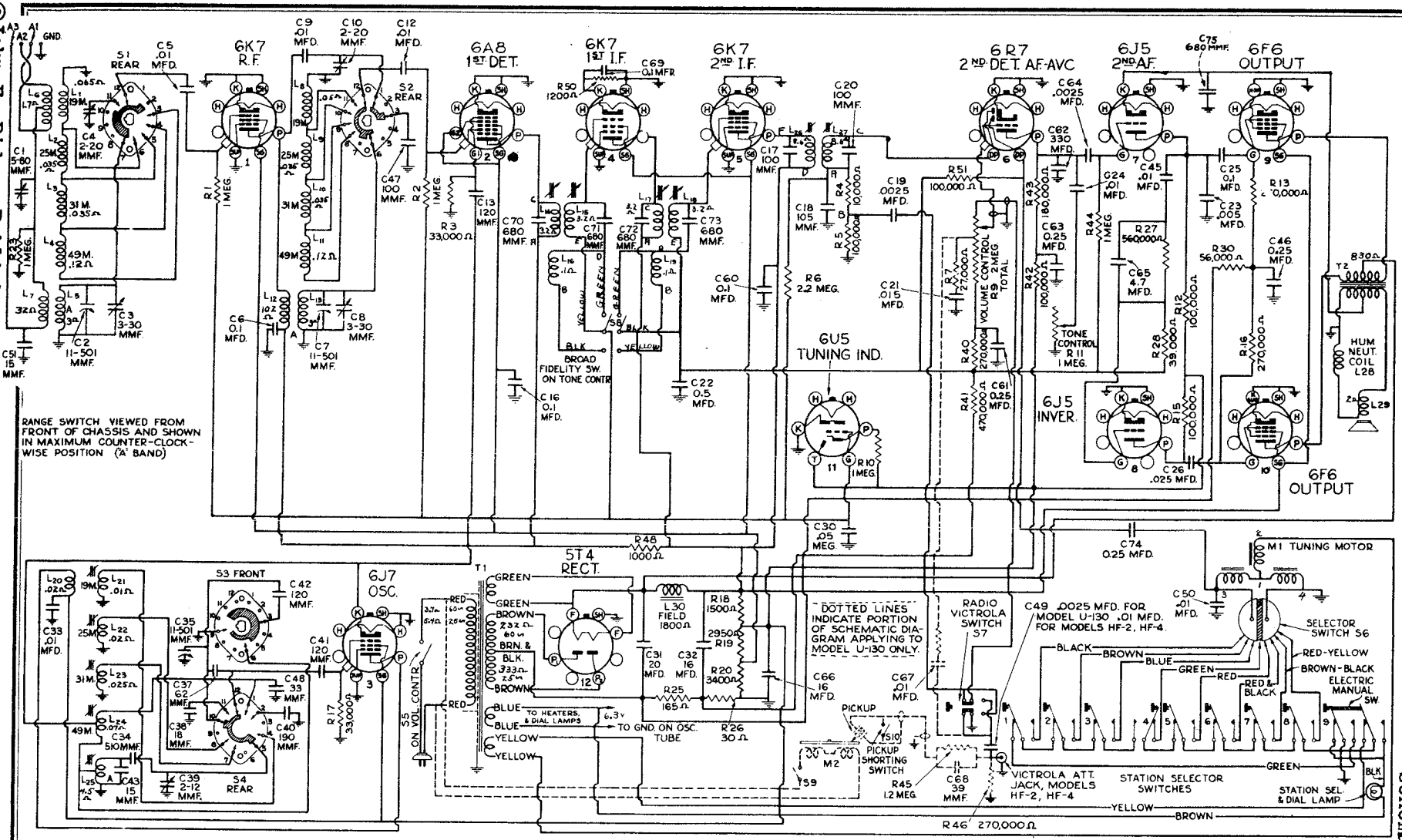

Figure 4—Schematic Circuit Diagram

FREQUENCY RANGES

"Standard Broadcast" (A)	540-1,720 kc
"49 Meter" Band	5.92-6.23 mc
"31 Meter" Band	9.48-9.69 mc
"25 Meter" Band	11.68-11.94 mc
"19 Meter" Band	15.08-15.39 mc
Intermediate Frequency	455 kc

R-F ALIGNMENT FREQUENCIES

"A" Band	600 kc (osc.); 1,500 kc (osc., det., ant.)
"49 M"	6.0 mc (osc.)
"31 M"	9.60 mc (osc., det., ant.)
"25 M"	11.8 mc (osc.)
"19 M"	15.2 mc (osc.)

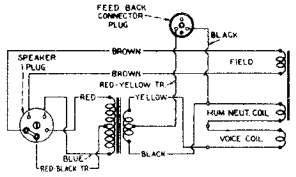

Above — Connections and Colors of Loudspeaker Wiring.

MODELS HF-2,HF-4,U130
Chassis Wiring,Voltage
Transformer Data,Lead Dress

RCA MFG. CO., INC.

Measurements made to chassis unless otherwise indicated, with set tuned to quiet point and volume control at minimum. Values should hold within approximately ±20% with 117-volt a-c supply.

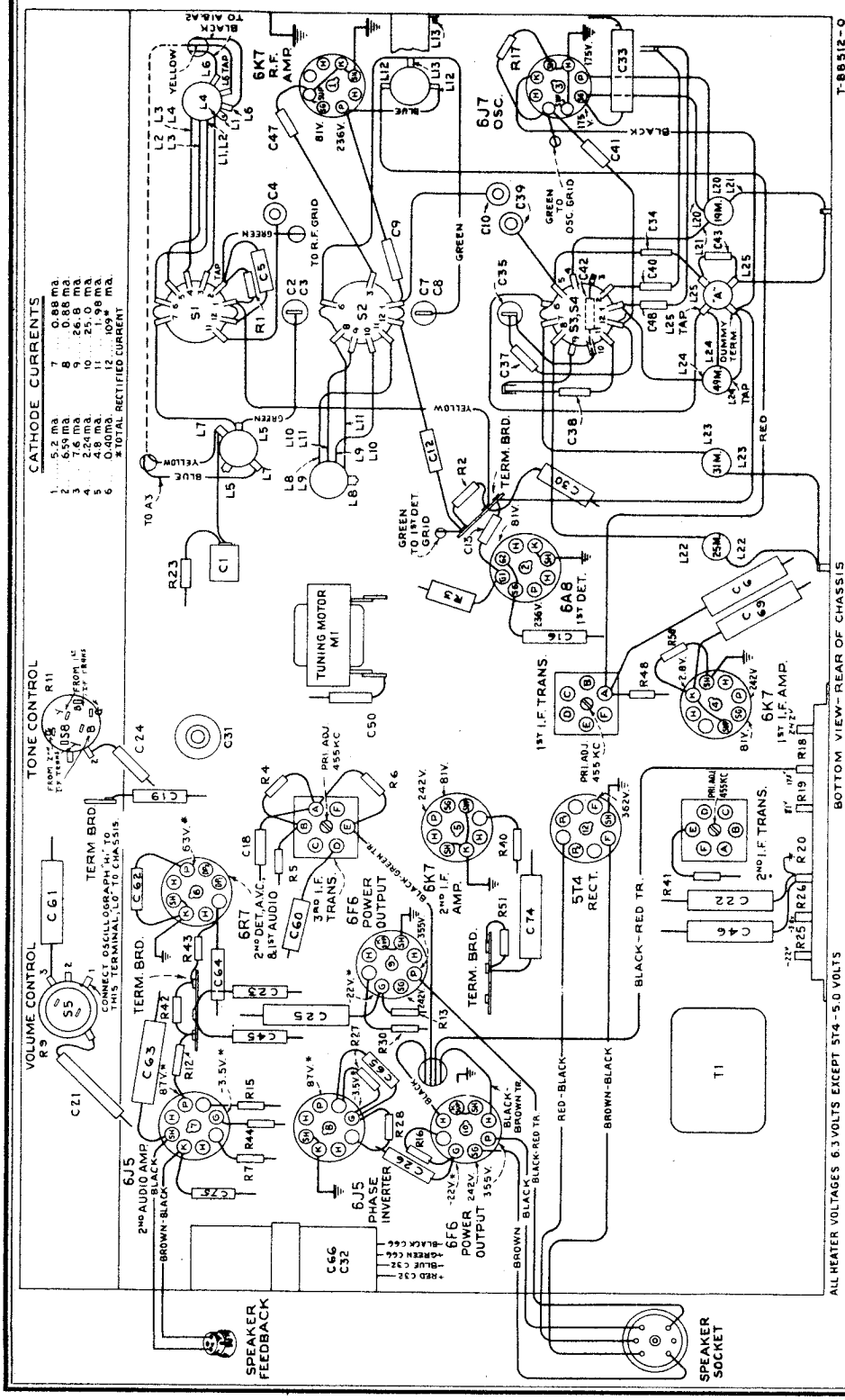

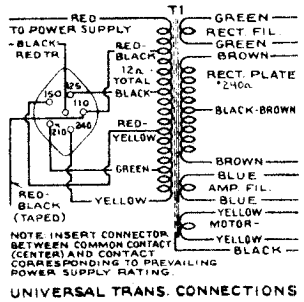

UNIVERSAL TRANS. CONNECTIONS

Above — Universal Power Transformer Connections. (110-volt supply for a Victrola Attachment may be obtained by connecting the motor to the red and the red-black leads.)

Figure 5—R-F Wiring Diagram and Socket Voltages

Precautionary Lead Dress.—

(1) Keep tuning tube cable and the lead from the left pilot light away from the 6F5 grid cap.

(2) Leads on spread-band antenna and r-f coils and trimming capacitors should be kept short as possible.

(3) Keep black lead from L25 away from C38 and L24.

(4) Keep black lead from L25 to cathode lug on 6J7 away from R17.

(5) The power cord lead and the primary lead of the power transformer which connect to the power switch should be twisted together, and kept away from Volume Control.

(6) Keep C13 away from the 6A8 control grid lead and from the chassis.

(7) Shielded leads to Victrola jack must be dressed away from switch terminals and jack.

(8) Blue and black leads from antenna board to coils must be twisted.

(9) Black lead and condenser which connect to 6F6 plate should be kept away from inverter grid lead and resistors which connect to it.

***NOTE:** Values with star (*) are operating voltages in circuits with high series-resistance. The actual measured voltages will be lower, depending on the voltmeter loading.

©John F. Rider, Publisher

RCA MFG. CO., INC.

MODELS HF-2, HF-4, U130
Socket, Trimmers, Tuner
Dial Drive Data, Notes

LOUDSPEAKER

Type..... 12-inch Electrodynamic
Voice Coil Impedance..... 2.2 ohms at 400 cycles

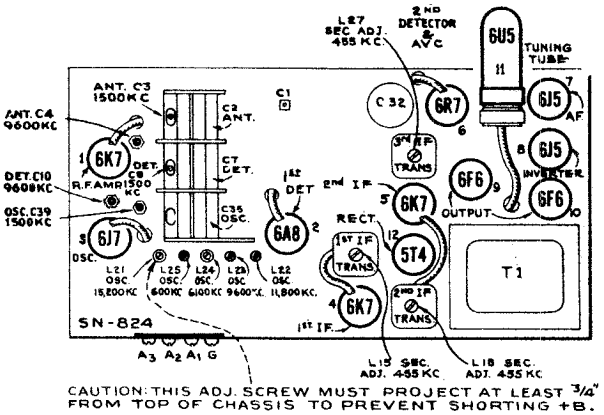

Figure 3—Tube and Trimmer Locations

Loudspeaker.—Centering of the loudspeaker is made in the usual manner with three narrow celluloid or paper feelers after first removing the front dust cover. This may be removed by softening its cement with a light application of acetone, using care not to allow the acetone to flow into the air gap. A dust cover should be cemented in place upon completion of adjustment.

NOTE: Due to inverse feedback used on these models, it is very important to connect speaker, speaker cable, and feedback cable, exactly as shown in the schematic diagram.

Victrola Attachment. — A jack located near the "Magic Eye" tube is provided for connecting a Victrola Attachment into the audio-amplifying circuit. The cable running from the Victrola Attachment should be terminated in a Stock No. 31048 plug to fit the jack.

PHONOGRAPH (Model U-130 only)

Type..... Automatic
Record Capacity..... Eight 10-inch, or Seven 12-inch
Turntable Speed..... 78 r.p.m. (Adjustable)
Type Pickup..... Crystal
Pickup Impedance..... 80,000 ohms at 1,000 cycles

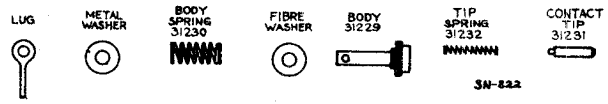

Figure 6—(Above) Component Parts of Station-Setting Contact

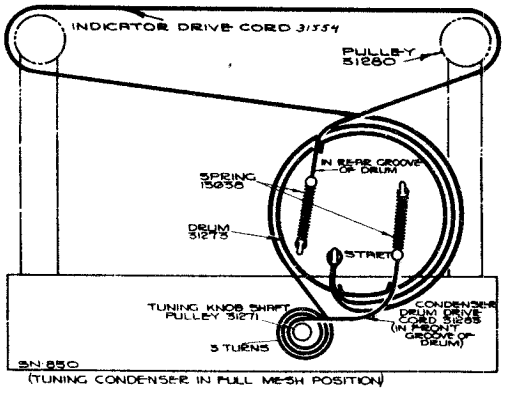

Models HF-4, U-130

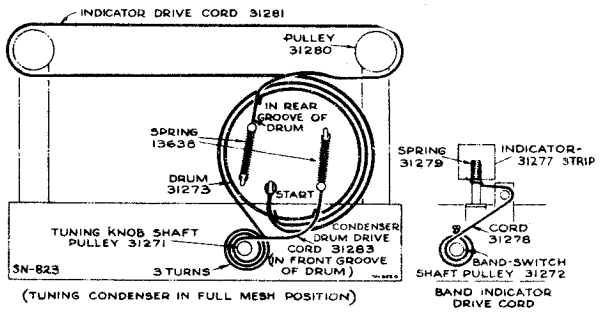

Model HF-2

Figure 9—Drive Cord Arrangement for Tuning Condenser, Dial Indicator, and Band Switch

This illustration shows connections for a G8A Armchair Control Unit. This unit is not supplied with the receiver but may be added as an accessory.

Station Button	Color of Lead To Station-Setting Contact
No. 1	Black
No. 2	Brown
No. 3	Blue
No. 4	Green
No. 5	Red
No. 6	Red-black
No. 7	Brown-black
No. 8	Red-yellow

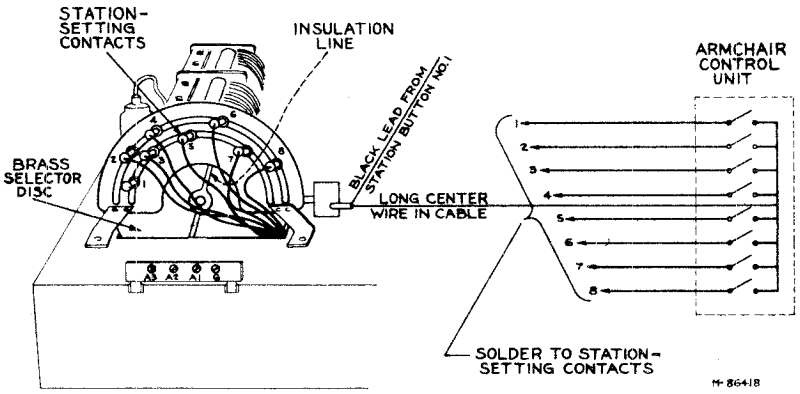

Figure 7—Station-Setting Contacts and Selector Disc

Lubrication

Motor bearings and **gear bearings;** use light machine oil.

Gear faces; use "Pure Oil No. 611" or petroleum jelly.

Dial-indicator pulleys and **rails;** use "Castordag" or petroleum jelly.

Selector disc; apply ***thin*** film of petroleum jelly.

Friction leather on flywheel; apply "neats-foot" oil. When replacing leather, soak it for at least 24 hours in neats-foot oil, and insert in flywheel while dripping.

©John F. Rider, Publisher

MODELS HF-2,HF-4,U130
Alignment,Tuner Data
Antenna

Steps	Connect the high side of test-oscillator to—	Tune Test-Oscillator to—	Range Selector	Set Tuning Gang to—	Adjust the following for max. peak output
No. 1	Turn Fidelity Control to Maximum Counter-clockwise position.				
No. 2	6K7 2nd I-F grid cap in series with .01 mfd.	455 kc	"A"	Quiet Point between 550-750 kc	L26, L27 (2nd I-F transformer)
No. 3	6K7 1st I-F grid cap in series with .01 mfd.	455 kc	"A"	Quiet Point between 550-750 kc	L17, L18 (2nd I-F transformer)
No. 4	6A8 1st-det. grid cap in series with .01 mfd.	455 kc	"A"		L14, L15 (1st I-F transformer)
No. 5	A2, in series with 100 mmf. A3 to Chassis.	1,500 kc	"A"	1,500 kc (151.5°)	C39 (osc.) C3 (ant.) C8 (det.)
No. 6	A2, in series with 100 mmf. A3 to Chassis.	600 kc	"A"	600 kc (30.0°)	L25 (osc.)
No. 7	A2, in series with 100 mmf. A3 to Chassis.	1,500 kc	"A"	1,500 kc (151.5°)	C39 (osc.)
No. 8	A2 Connect A1 to chassis.	6,100 kc	"49M"	6,100 kc (106°)	L24 (osc.)*
No. 9	A2 Connect A1 to chassis.	9,600 kc	"31M"	9,600 kc (102°)	L23 (osc.)** C4 (ant.) C10 (det.)
No. 10	A2 Connect A1 to chassis.	11,800 kc	"25M"	11,800 kc (90.0°)	L22 (osc.)**
No. 11	A2 Connect A1 to chassis.	15,200 kc	"19M"	15,200 kc (78.0°)	L21 (osc.)**

* Use maximum inductance peak (plunger in) if two peaks can be obtained.

** Use minimum inductance peak (plunger out) if two peaks can be obtained.

Note that oscillator tracks above signal frequency on al bands except "49M" where it tracks below.

Cathode-Ray Alignment is the preferable method. Connections for the oscillograph are shown in the chassis drawing.

Output Meter Alignment.—If this method is used, connect the meter across the voice coil, and turn the receiver volume control to maximum.

Test-Oscillator.—For all alignment operations, connect the low side of the test-oscillator to the receiver chassis, and keep the output as low as possible to avoid a-v-c action.

Calibration Scale on Indicator-Drive-Cord Drum.—The tuning dial is fastened in the cabinet and cannot be used for reference during alignment, therefore a calibration scale is attached to the rear of the indicator-drive-cord drum which is mounted on the front shaft of the gang condenser. The setting of the gang condenser is read on this scale, which is calibrated in degrees. The correct setting of the gang in degrees, for each alignment frequency, is given in the alignment table.

As the first step in r-f alignment, check the position of the drum. The "0" mark on the drum scale must be vertical, and directly over the center of the gang-condenser shaft when the plates are fully meshed. The drum is held to the shaft by means of two set screws, which must be tightened securely when the drum is in the correct position.

To determine the corresponding frequency for any setting of the calibration scales, refer to the accompanying drawing which shows the dial with 0-180° calibration scales drawn at top and bottom.

Pointer for Calibration Scale.—Improvise a pointer for the calibration scale by fastening a piece of wire to the gang-condenser frame, and bend the wire so that it points to the "0" mark on the calibration scale when the plates are fully meshed.

Dial-Indicator Adjustment.—After fastening the chassis in the cabinet, attach the dial indicator to the drive cable with indicator at the 530 kc mark, and gang condenser fully meshed. The indicator has a spring clip for attachment to the cable.

Spread-Band Alignment.—The most satisfactory method of aligning or checking the spread-band ranges is on actual reception of short-wave stations of known frequency, by adjusting the magnetite-core oscillator coil for each band so that these stations come in at the correct points on the dial.

In exceptional cases, when the set is being serviced in a location where the noise level is high enough to prevent reception of short-wave stations, a test-oscillator may be used for alignment, but an extremely high degree of accuracy is required in the frequency settings of the test-oscillator, as a slight error will produce considerable inaccuracy on the spread-band dials. The frequency settings of the test-oscillator may be checked by one or both of the following methods:

1. Determine the exact dial settings of the test-oscillator (for frequencies at or close to the specified alignment frequencies) by zero-beating the test-oscillator against short-wave stations of known frequency.
2. Use harmonics of the standard-broadcast range of a test-oscillator, first checking the frequency settings on this range by means of a crystal calibrator (RCA Stock No. 9572), or by zero-beating against standard broadcast stations.

When a test oscillator is employed for spread-band alignment, a final check should be made on actual reception of short-wave stations of known frequency, and the magnetite-core oscillator coil for each band should be re-adjusted so that the stations come in at the correct points on the dial.

For additional information, refer to booklet "RCA Victor Receiver Alignment."

Using RCA Stock No. 150 Test Oscillator.—When using this oscillator for spread-band alignment, insert an open-circuit plug in the "EXT. MOD" jack, and set the test-oscillator dial 800 kc lower than the desired frequency for the four lower frequency ranges, and 800 kc higher than the desired frequency for the two high ranges. This provides an unmodulated signal of the desired frequency and the Magic Eye may be used as an output indicator for this unmodulated signal.

Armchair Control Unit

When a Model G8A Armchair Control is connected to the receiver as shown in figure 7 it duplicates the action of the push-buttons on the front panel when No. 1 button is pressed down. The black lead from push-button No. 1 is unsoldered from No. 1 station-setting contact and soldered to a terminal board which is to be mounted on the frame of selector mechanism. In some cases one of the other seven station buttons on the set may be used in place of No. 1 button for the operation of the Armchair Control.

This arrangement allows the use of only seven of the eight buttons when tuning in stations at the set, but allows the use of the entire eight buttons on the Model G8A Armchair Control. In operating the G8A Armchair Control the push-button must be held down until the station has been tuned in. Care must be taken not to hold two of the station-buttons down at one time as both windings of the motor may be engaged simultaneously causing the motor to be inoperative and overheated.

Antenna Connections

RCA Victor Master Antenna Kit.—Connect the twisted-pair transmission line to terminals A1 and A2 on the terminal board at rear of chassis. Connect the counter-poise to A3. Terminal G may be connected to ground, but this connection is not necessary for correct operation.

Noise-Reducing Adjustment.—After the RCA Victor Master Antenna Kit is connected to the receiver, tune the receiver to a point near 900 kc where no station is heard. Turn volume control clockwise until noise is heard. If no noise of a regular character is audible, start any brush-type motor-driven appliance, such as a vacuum cleaner, electric razor, refrigerator, etc., but do not bring it too near the receiver. This will generate noise as a continuous crackling, or buzz. Adjust C1 to a point where this noise is reduced to a minimum.

Adjustment of the noise reducing trimmer C1 should be made in the customer's home, with the RCA Victor Master Antenna connected to the receiver.

This adjustment is effective only when the RCA Victor Master Antenna is used. For all other types of antenna, the noise-adjustment trimmer should be screwed all the way down.

Other Antennas.—Use terminals A1 and A3 on the receiver terminal board as antenna and ground connecting points respectively. Terminal A3 may be connected to terminal G, unless this causes interference, in which case this connection should be omitted.

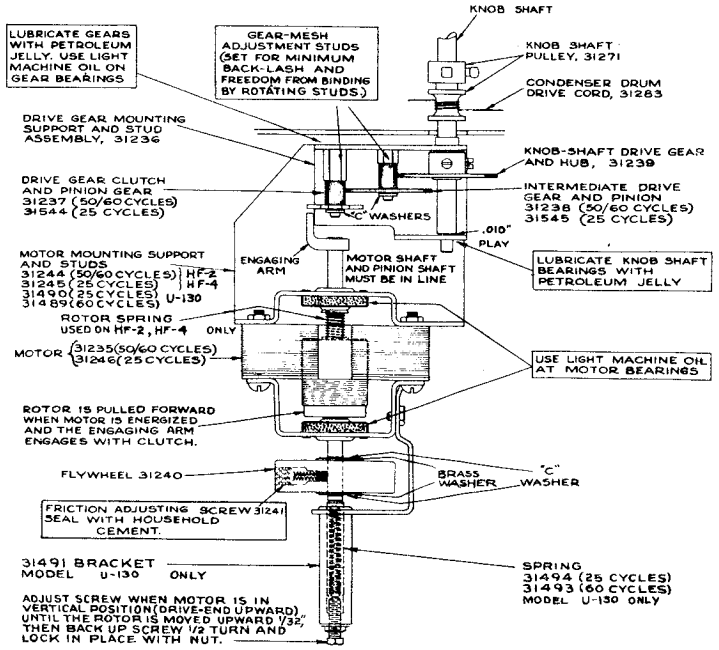

Figure 8—Motor and Gear Mechanism

There must be 1/32-inch clearance between the end of the engaging arm and the face of the intermediate gear when the motor is in its full forward position.

Electric Tuning Mechanism

The circuit of the electric tuning mechanism is shown in the schematic diagram, and the mechanical details are illustrated below.

The action can be understood by following a cycle of operation:

When a station button is pushed in, it completes the 24-volt circuit through the corresponding station-setting contact and one-half of the brass selector disc, which is connected to one side of the motor field coil. This energizes the motor, and the rotor is pulled forward, engaging with the gear train that drives the tuning condenser and selector disc. The condenser and disc rotate until the insulation line comes under the particular station-setting contact, and the motor circuit is broken. Inertia carries the insulation line past the station-setting contact which then makes contact to the other half of the disc. This completes the circuit to the other side of the motor field coil, causing the motor to reverse. The floating flywheel is still turning in the original direction and therefore slows down the reversal movement of the motor; as a result the selector disc is moved slowly back until the insulation line is under the station-setting contact, when the circuit is broken and the mechanism stops.

Adjustment of Flywheel Friction

In normal operation, the motor drives the tuning condenser and selector disc until the insulation line just passes the particular station-setting contact: The motor then reverses and moves the disc slowly in the opposite direction until the insulation line is under the contact, and the mechanism stops.

In some cases, particularly with high line-voltage, the disc may make two or three reversals before stopping.

The flywheel friction adjustment screw should be set to give the least number of reversals with the chassis in normal horizontal position.

Adjustment of Selector Disc

The brass selector disc is fastened to the rear shaft of the tuning condenser by means of two set-screws. When the condenser is at maximum (plates fully meshed) the insulation line should be horizontal, with the operating-end at the left (viewed from rear). The operating-end has dark insulating material and the brass is beveled at this end.

The selector disc should be set so that the contact-tip plungers in the station-setting contacts project not more than 1/16-in. from the body of the contacts.

Muting Circuit

When the electric tuning mechanism is in action, the motor-supply voltage is fed into a diode rectifier circuit which applies a high +bias to the I-F first-audio and second-audio tubes. This prevents audio amplification and makes the set quiet or "mute" while the mechanism is operating.

©John F. Rider, Publisher

©John F. Rider, Publisher

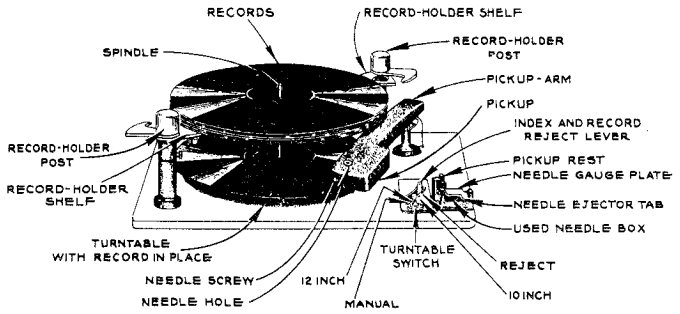

Top View of Automatic Record Changer

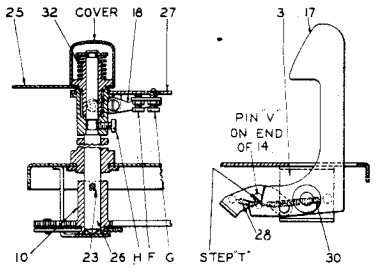

Details of Record Shelf Posts, and Locating Lever Assemblies

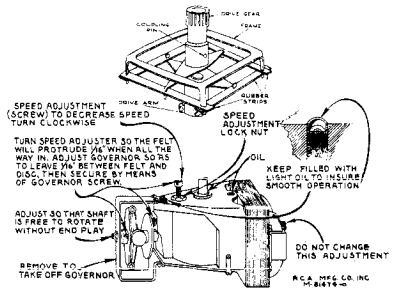

Motor Data and Coupling

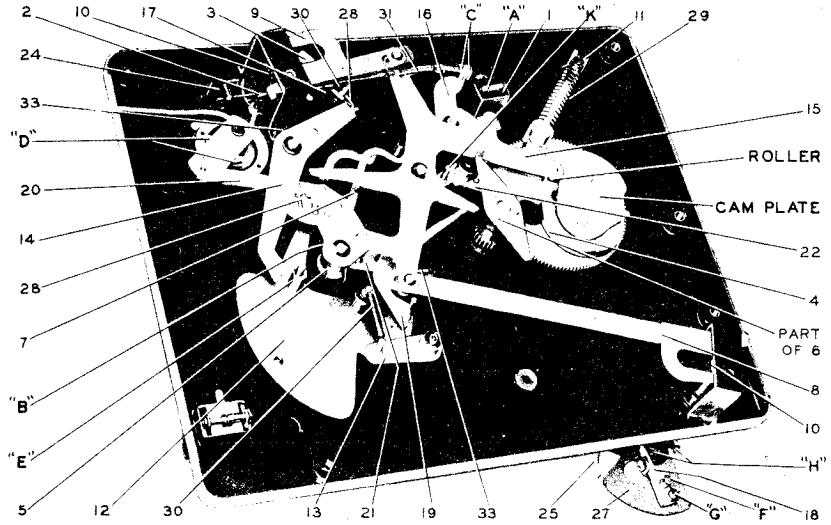

Bottom View of Automatic Record Changer

NOTE: Numbers refer to parts—letters refer to adjustments.

Automatic Record Changer

GENERAL INFORMATION

Before servicing the automatic record changer, inspect the assembly to see that all levers, parts, gears, springs, etc. are in good order and are correctly assembled.

A bind or jam in the mechanism can usually be relieved by rotating the turntable in the reverse direction.

The changer can be conveniently rotated through its change cycle by pushing the index lever to "Reject" and revolving the turntable by hand. Six turntable revolutions are required for one change cycle.

The turntable, spindle, and pinion gear are assembled by means of a 3/32 inch straight pin. This pin may be removed by gently driving with a standard pin punch.

If the record changer or cabinet is not perfectly level, normal operation is likely to be affected.

The 10 and 12 inch records must be absolutely flat for smooth operation when using a mixture of the two sizes.

A shorting switch, located in the pickup head, operates due to pressure when the pickup is placed on the pickup rest.

ADJUSTMENTS

A. Main Lever.—This lever is basically important in that it interlinks the various individual mechanisms which control needle landing, tripping, record separation, etc. One adjustment is provided for the main lever. Rotate the turntable until the changer is out-of-cycle; and adjust rubber bumper bracket (A) so that the roller clears the nose of the cam plate by 1/16 inch.

B. Friction Clutch.—The motion of the tone arm toward the center of the record is transmitted to the trip pawl "22" by the trip lever "7" through a friction clutch "5." If the motion of the pickup is abruptly accelerated or becomes irregular due to swinging in the eccentric groove, the trip finger "7" moves the trip pawl "22" into engagement with the pawl on the main gear, and the change cycle is started. Proper adjustment of the friction clutch "5" occurs when movement of the tone arm causes positive movement of the trip pawl "22" without tendency of the clutch to slip. The friction should be just enough to prevent slippage, and is adjustable by means of screw "B." If adjustment is too tight, the needle will repeat grooves; if too loose, tripping will not occur at the end of the record.

C. Pickup Lift Cable Screw.—During the record change cycle, lever "16" is actuated by the main lever "15" so as to raise the tone arm clear of the record by means of the pickup lift cable. To adjust pickup for proper elevation, stop the changer "in-cycle" at the point where pickup is raised to the maximum height above turntable plate, and has not moved outward; at this point adjust locknuts "C" to obtain 1 inch spacing between needle point and turntable top surface.

D. & E. Needle Landing on Record.—The relation of coupling between the tone arm vertical shaft and lever "20" determines the landing position of the needle on a 10 inch record. Position of eccentric stud "E" governs the landing of the needle on a 12 inch record; this, however, is dependent on the proper 10 inch adjustment.

To adjust for needle landing, place 10 inch record on turntable; push index lever to reject position and return to the 10 inch position; see that pickup locating lever "17" is tilted fully toward turntable; rotate mechanism through cycle until needle is just ready to land on the record; then see that pin "V" on lever "14" is in contact with "Step T" on lever "17." The correct point of landing is 4-11/16 inches from the nearest side of the turntable spindle; loosen the two screws "D" and adjust horizontal position of tone arm to proper dimension, being careful not to disturb levers "14" and "17". Leave approximately 1/32 inch end play between hub of lever "20" and pickup base bearing, and tighten the blunt nose screw "D"; run mechanism through several cycles as a check, then tighten cone pointed screw "D".

After adjusting for needle landing on a 10 inch record, place 12 inch record on turntable; push index lever to reject and return to 12 inch position; rotate mechanism through cycle until needle is just ready to land on the record; the correct point of landing is 5-11/16 inches from nearest side of spindle. If the landing is incorrect, turn stud "E" until the eccentric end adjusts lever "14" to give correct needle landing. The eccentric end of the stud must always be toward the rear of the motor board, otherwise incorrect landing may occur with 10 inch records.

F. & G. Record Separating Knife.—The upper plate (knife) "25" on each of the record posts serves to separate the lower record from the stack and to support the remaining records during the change cycle. It is essential that the spacing between the knife and the rotating record shelf "27" be accurately maintained. The spacing for the 10 inch record is nominally .055 inch, and for the 12 inch record is .075 inch.

To adjust, rotate the knife to the point of minimum vertical separation from the record shelf and turn screw and locknut "F" to give .052—.058 inch separation. Screw "G" must not be depressed during this adjustment. After setting screw "F" adjust screw "G" so that when its tip is depressed flush with top of record shelf, the vertical spacing between the knife, in its lowest rotational position, and the shelf, is .072—.078 inch.

H. Record Support Shelf.—The record shelf revolves during the change cycle to allow the lower record to drop onto the turntable. Both posts are rotated simultaneously by a gear and rack coupled to the main lever "15," and it is necessary that adjustments be such that the record is released from both shelves at the same instant. To adjust, place a 12 inch record on the turntable, rotate mechanism into cycle to the point where tone arm is at maximum distance outward from turntable; lift record upward until it is in contact with both separating knives, then loosen screws "H" and shift record shelves so that the curved inner edges of the shelves are uniformly spaced at least 1/16 inch from record edge. Tighten the blunt nose screw "H," run mechanism through cycle several times to check action, then tighten cone pointed screw "H".

If record shelves or knives are bent, or not perfectly horizontal, improper operation and jamming of mechanism will occur.

J. Tone Arm Rest Support (not shown).—When the changer is out-of-cycle, the front lower edge of the pickup head should be 5/16 inch above surface of motor board. This may be adjusted by bending the tone arm support bracket, which is associated with the tone arm mounting base, in the required direction.

K. Trip Pawl Stop Pin.—The position of the trip pawl stop pin "K" in relation to the main lever "15" governs the point at which the roller enters the cam. By bending the pin support either toward or away from trip pawl bearing stud, the roller can be made to enter the cam later or earlier, respectively. This adjustment should be made so that the roller definitely clears the cam outer guide as well as the nose of the cam plate.

Lubrication.—Petrolatum or petroleum jelly should be applied to cam, main gear, spindle pinion gear, and gears of record posts.

Light machine oil should be used in the tone arm vertical bearing, record post bearings, and all other bearings of various levers on underside of motor board.

The felt washer between the turntable and spindle bearing should be soaked in light engine oil whenever the turntable is removed, or as required for proper operation.

Do not allow oil or grease to come in contact with, rubber mounting of tone arm base, rubber bumper, or flexible coupling of drive motor.

MISCELLANEOUS SERVICE HINTS

Incorrect adjustment of a particular mechanism of the changer is generally exhibited in a specific mode of improper operation. The following relations between effects on operation and the usual mis-adjustments will enable ready adjustment in most cases.

1. For any irregularity of operation, the adjustment of the main lever "15" should be checked first as in "A".
2. Needle does not land properly on both 10 and 12 inch records—Make complete adjustments "D" and "E".
3. Needle does not land properly on 12 inch record but correct on 10 inch—Effect adjustment "E".
4. Failure to trip at end of record—Increase clutch "5" friction by means of screw "B". Also, see that levers "7" and "12" are free to move without touching each other.
5. Pickup strikes lower record of stack or drags across top record on turntable—Adjust lift cable per adjustment "C".
6. Needle does not track after landing—Friction clutch "5" adjustment "B" may be too tight; bind in tone arm vertical bearing; levers "7" and "12" fouled; or pickup output cable twisted.
7. Cycle commences before record is complete—Record is defective, or adjustment "B" of friction clutch "5" is too tight.
8. Wow in record reproduction—Record is defective; flexible coupling between motor and changer mechanism not correctly assembled; or instrument is not being operated at normal room temperature (65° F).
9. Record knives strike edge of records—Records warped; record edges are rough; or knife adjustments "F" and "G" are incorrect.
10. Record not released properly—Adjust record shelf assemblies in respect to shaft by means of adjustment "H".
11. Needle lands in 10 inch position on 12 inch record or misses record when playing both types mixed—Increase tension of pickup locating lever spring "30".

STOCK No.	DESCRIPTION	Unit List Price
	RECEIVER ASSEMBLIES	
31492	Bearing—Variable condenser motor rotor adjustment bearing—less bracket and cup assembly —Model U-130 only	.10
31253	Board—Antenna and ground terminal board—Models HF-2 and HF-4	.25
31531	Board—Antenna and ground terminal board—Model U-130 only	.25
31276	Bracket—Band indicator mounting bracket complete except less band indicating strip, cord, and tension spring	.40
31282	Bracket—Magic Eye bracket and holder	.22
31491	Bracket—Bracket and bearing cup for variable condenser motor rotor adjustment — Model U-130 only	.45
30766	Cap—Magic Eye rubber cap	.15
12884	Capacitor—Trimmer capacitor 2-20 mmfd. (C4, C10)	.60
12714	Capacitor—Trimmer capacitor 2-12 mmfd. (C39)	.50
14392	Capacitor—4.7 mmfd. (C65)	.35
31252	Capacitor—Adjustable trimmer 5-80 mmfd. (C1)	.25
12496	Capacitor—15 mmfd. (C51)	.35
31353	Capacitor—15 mmfd. (C43)	.40
31350	Capacitor—18 mmfd. (C38)	.30
31354	Capacitor—33 mmfd. (C48)	.70
13545	Capacitor—39 mmfd. (C68)—Model U-130 only	.35
31349	Capacitor—62 mmfd. (C37)	.30
12720	Capacitor—100 mmfd. (C18, C47)	.35
31270	Capacitor—100 mmfd. (C17, C20)	.35
12724	Capacitor—120 mmfd. (C13, C41, C42)	.35
31251	Capacitor—190 mmfd. (C40)	.30
12952	Capacitor—330 mmfd. (C62)	.35
31348	Capacitor—510 mmfd. (C34)	.35
31552	Capacitor—680 mmfd. (C70, C71, C72, C73)	.40
14498	Capacitor—680 mmfd. (C67)	.45
5107	Capacitor—.0025 mfd. (C19, C49, C64) (C49 —Model U-130 only)	.20
4838	Capacitor—.005 mfd. (C23)	.25
4858	Capacitor—.01 mfd. (C9, C45)	.25
14393	Capacitor—.01 mfd. (C5, C12, C24, C33, C49, C50, C67) (C49—Models HF-2 and HF-4 only) (C67—Model U-130 only)	.30
11315	Capacitor—.015 mfd. (C21)	.20
4870	Capacitor—.025 mfd. (C26)	.20
30882	Capacitor—.05 mfd. (C30)	.20
4839	Capacitor—0.1 mfd. (C8, C16, C25, C60, C69)	.30
30965	Capacitor—0.25 mfd. (C74)	.30
12484	Capacitor—0.25 mfd. (C46, C61, C63)	.30
30867	Capacitor—0.5 mfd. (C22)	.30
31563	Capacitor—Comprising 2 sections each 16 mfd. (C32, C66)	2.15
31495	Capacitor—20 mfd. (C31)	1.75
31544	Clutch—Variable condenser drive gear clutch and pinion gear—engages pin on motor shaft—25 cycle models only	.45
31237	Clutch—Variable condenser drive gear clutch and pinion gear—engages pin on motor shaft—50-60 cycle models only	.35
31263	Coil—"A" band antenna coil (L5, L7)	.95
31264	Coil—19, 25, 31, and 49 meter bands antenna coil (L1, L2, L3, L4, L6)	1.35
31257	Coil—"A" band oscillator coil (L25)	.55
31258	Coil—19 meter band oscillator coil (L20, L21)	.45
31265	Coil—"A" band r-f coil (L12, L13)	1.20
31266	Coil—19, 25, 31, and 49 meter bands r-f coil (L8, L9, L10, L11)	.95
31254	Coil—25 meter band oscillator coil (L22)	.40
31255	Coil—31 meter band oscillator coil (L23)	.40
31256	Coil—49 meter band oscillator coil (L24)	.50
31234	Condenser—3-gang variable condenser (C2, C3, C7, C8, C56)	6.45
31345	Contact—Push button switch contacts—comprising 10 contacts riveted on insulating strip	.70
31344	Contact—Push button switch contacts—comprising 13 contacts riveted on insulating strip	1.20
31231	Contact—Contact tip for station selector plunger	.06
31278	Cord—Band indicator drive cord	.12
31281	Cord—Indicator pointer drive cord—Model HF-2 only	.60
31554	Cord—Indicator pointer drive cord—Models HF-4 and U-130 only	.50
31283	Cord—Variable condenser drum drive cord	.20
31260	Core—Adjustable core and stud for "A" band oscillator coil	.35
31269	Core—Adjustable core for i-f transformers	.15
31259	Core—Adjustable core and stud for 19, 25, 31, or 49 mete. band oscillator coils	.15
31273	Drum—Indicator drive cord drum	.80
31240	Flywheel—Variable condenser drive motor flywheel	.25
31239	Gear—Variable condenser knob shaft drive gear and hub	.65
31545	Gear—Variable condenser intermediate drive gear and pinion gear—25 cycle models only	.40
31238	Gear—Variable condenser intermediate drive gear and pinion gear—50-60 cycle models only	.50
31277	Indicator—Band indicator strip—Models HF-2 and HF-4	.15
31555	Indicator—Band indicator strip—Model U-130	.15
11891	Lamp—Dial lamp	.17
31480	Lamp—Tuning indicator pilot lamp	.20
31243	Leather—Friction leather insert for flywheel	.04
31346	Lock-plate—Push button switch lock-plate—comprising 10 contact locks in one strip	.80
31246	Motor—Variable condenser drive motor for 25 cycle models (M1)	6.50
31235	Motor—Variable condenser drive motor for 50-60 cycle models (M1)	4.85
31228	Plate—Station selector contact—less plungers	.45
31227	Plate—Station selector mounting — mounts on rear of variable condenser	.50

STOCK No.	DESCRIPTION	Unit List Price
	PICKUP AND ARM ASSEMBLIES Model U-130	
31162	Cable—Pickup arm lift cable and clips	.15
31166	Crystal—Pickup crystal cartridge and needle screw	4.25
31159	Pickup and arm complete	7.45
31160	Screw—Pickup needle screw	.12
31161	Shaft—Pickup pivot arm and shaft assembly	.45
	SPEAKER ASSEMBLIES (Speaker RL70F-5)	
13866	Cap—Dust cap for cone center	.03
11234	Coil—Field coil (L30)	3.85
11469	Coil—Hum neutralizing coil (L28)	.30
31275	Cone—Speaker cone and voice coil (L29)	1.75
31567	Plug—3-contact male plug for speaker	.15
31539	Plug—5-contact male plug for speaker	.25
31556	Speaker complete	13.45
31557	Transformer—Output transformer (T2)	3.35
14357	Washer—Spring washer to hold field coil securely	.06
	MISCELLANEOUS ASSEMBLIES	
31358	Button—Station selector push button	.15
13103	Cap—Pilot lamp cap—Model U-130 only	.15
31286	Carriage—Indicator pointer slide carriage—Model HF-2 only	.22
31456	Cover—8-protective covers for push button markers	.08
31540	Cushion—Chassis mounting cushion and screw assemblies sufficient for one chassis—Model U-130 only	.50
31541	Cushion—Motor plate mounting cushion and clamp assembly, sufficient for one instrument —Model U-130 only	.50
31562	Dial—Station selector dial scale and crystal—Models HF-4 and U-130 only	1.65
31363	Dial—Station dial scale and crystal — Model HF-2 only	1.65
31561	Escutcheon—Dial escutcheon less dial scale, and push buttons—Models HF-4 and U-130 only	2.60
31362	Escutcheon—Dial escutcheon less dial scale, and push buttons—Model HF-2 only	2.65
30698	Hinge—Cabinet lid hinge—Model U-130 only	.95
4585	Hinge—Door hinges (1 top and 1 bottom) sufficient for one door—Model HF-4 only	.60
31564	Holder—Needle card holder—Model U-130	.50
31560	Indicator—Station selector indicator pointer and carriage assembly—Models HF-4 and U-130	.40
31284	Indicator—Station selector indicator pointer—less carriage—Model HF-2 only	.35
31355	Knob—Station selector, volume control, tone control, or range switch knob	.12
31158	Marker—"Dial Tuning" push button marker	.01
31457	Marker—"Record Player" push button marker	.01
31589	Marker—Station call letter push button markers	.35
31566	Pull—Door pull—Model HF-4 only	.60
31287	Rod—Indicator pointer slide rod	.15
31285	Screen—Dial color screen—Model HF-2 only	.75
31559	Screen—Dial color screen—Models HF-4 and U-130 only	.65
4560	Screw—Chassis mounting screw, washer, and lockwasher (4 required)—Models HF-2 and HF-4 only	.06
31558	Spring—Indicator pointer slide stop spring	.02
14270	Spring—Retaining spring for knob Stock No. 31355	.05
31478	Support—Cabinet lid support — Model U-130 only	2.20
31470	Suspension—Motor board suspension springs, screw, and lockwasher (4 required)—Model U-130 only	.10
	ANTENNA ASSEMBLIES	
31426	Counterpoise Line—Additional length 60 ft. long	1.35
12426	Insulator—Strain and counterpoise insulator	.05
9816	Transmission Line—Additional length 60 ft. long	1.50

STOCK No.	DESCRIPTION	Unit List Price
30868	Plug—2-contact female plug for motor power cable—Model U-130 only	.35
31572	Plug—3-contact female plug for speaker cable	.15
12493	Plug—5-contact female plug for speaker cable	.30
31229	Plunger—Station selector plunger—less contact tip, and tip spring	.18
31280	Pulley—Indicator pointer drive cord pulley	.10
31271	Pulley—Motor drive pulley—fastens on motor drive knob shaft	.25
31272	Pulley—Range switch pulley	.20
31548	Resistor—Voltage divider comprising one 1,500 ohms, one 2,950 ohms, one 3,400 ohms, one 80 ohms, and one 165 ohms, sections (R18, R19, R20, R25, R26)	.90
14720	Resistor—1,000 ohms, ½ watt (R48)	.20
12267	Resistor—1,200 ohms, ½ watt (R50)	.20
14589	Resistor—10,000 ohms, ½ watt (R4)	.20
12738	Resistor—27,000 ohms, ½ watt (R7)	.20
12464	Resistor—33,000 ohms, ½ watt (R3, R17)	.20
31573	Resistor—39,000 ohms, 1/10 watt (R28)	.15
12286	Resistor—56,000 ohms, ½ watt (R30)	.20
14560	Resistor—100,000 ohms, ½ watt (R5, R12, R15, R42, R51)	.20
13698	Resistor—180,000 ohms, ½ watt (R43)	.20
12199	Resistor—270,000 ohms, ½ watt (R13, R16, R40, R46) (R46—Model U-130 only)	.20
12285	Resistor—470,000 ohms, ½ watt (R41)	.15
11397	Resistor—560,000 ohms, 1/10 watt (R27)	.15
12013	Resistor—1 meg., 1/10 watt (R10)	.20
13730	Resistor—1 meg., ½ watt (R1, R2, R23, R44, R47) (R47—Model U-130 only)	.20
30208	Resistor—1.2 meg., ½ watt (R45)—Model U-130 only	.20
12679	Resistor—2.2 meg., ½ watt (R6)	.20
14887	Retainer—Indicator pointer drive cord pulley retainer	.01
31233	Disc—Station selector rotor disc—mounts on rear of variable condenser shaft	1.16
31241	Screw—4-20 headless, cone pointer set screw for flywheel	.02
4119	Screw—No. 8-32 headless set screw for gear Stock No. 31239	.02
4669	Screw—No. 8-32 x ¼ set screw for pulley Stock No. 31267, and 31272, and drum Stock No. 31273	.03
14350	Screw—No. 8-32 square head set screw for station selector rotor disc	.03
31364	Socket—Dial lamp socket	.20
13871	Socket—Magic Eye socket	.45
31347	Socket—Pickup input socket and bracket	.30
31251	Socket—Radiotron socket	.25
31365	Socket—Tuning indicator lamp insulated socket	.30
31242	Spring—Friction leather tension spring for flywheel	.01
13638	Spring—Indicator pointer drive cord, and variable condenser drum drive cord tension spring	.08
31232	Spring—Contact tip spring for station selector plunger	.01
12007	Spring—Retaining spring for adjustable core	.02
31230	Spring—Station selector plunger body spring	.01
31279	Spring—Tension spring for band indicator	.03
31313	Spring—Tension spring for push button switch latch bar	.06
31494	Spring—Variable condenser motor rotor adjustment bearing spring for 25 cycle models—Model U-130	.02
31493	Spring—Variable condenser motor rotor adjustment bearing spring for 50-60 cycle models —Model U-130	.02
31236	Support—Variable condenser drive gear mounting support and studs assembly	.65
31490	Support—Variable condenser motor mounting support and studs—25 cycle models only—Model U-130 only	.60
31245	Support—Variable condenser motor mounting support and studs—25 cycle models only—Models HF-2 and HF-4 only	.70
31489	Support—Variable condenser motor mounting support and studs—50-60 cycle models only —Model U-130	.35
31244	Support—Variable condenser motor mounting support and studs—50-60 cycle models only —Models HF-2 and HF-4 only	.45
31360	Switch—Pickup switch for mounting on push button switch (S7)	2.70
31312	Switch—Push button switch and bracket assembly	4.25
31247	Switch—Range switch (S1, S2, S3, S4)	2.20
31546	Tone Control and fidelity switch (R11, S8)	1.50
31565	Transformer—First i-f transformer (L14, L15, C70, C71, L16)	2.40
31551	Transformer—Second i-f transformer (L17, L18, L19, C72, C73)	2.40
31549	Transformer—Third i-f transformer (L26, L27, C17, C20)	2.10
31226	Transformer—Power transformer 105-125 volts, 25-60 cycle (T1)	13.00
31225	Transformer—Power transformer 105-125 volts, 50-60 cycle (T1)	8.50
31308	Transformer—Power transformer 105-130, 140-160, 200-250 volts, 50-60 cycle (T1)	13.85
31547	Volume Control and power switch (R9, S5)	2.00
	MOTORBOARD ASSEMBLIES Model U-130	
31149	Base—Tone arm mounting base	.35
31152	Board—Record changer base complete with all welded and riveted posts and bearings—less all operating parts	7.90
14209	Bumper—Main lever rubber bumper (1)	.08
9848	Cup—Used needle cup, rest and lid complete	.75
31148	Escutcheon—Index escutcheon	.40
31151	Guide—Pickup lift cable guide (Coil spring, 60T 2-in. large) (2)	.10
31150	Mounting—Pickup arm base rubber mounting complete	.45
31155	Spring—Needle cup lid tension spring	.04
	OPERATING MECHANISM Model U-130	
31134	Bracket—Pickup locating lever mounting bracket (3)	.30
31144	Cam—Cam and gear assembly (4)	2.80
6808	Clutch—Trip lever friction clutch assembly (5)	.35
31146	Coupling—Motor coupling complete with turntable drive gear, rubber strips, motor coupling, and drive arm (6)	1.80
31129	Cover—Cap for top of record post	.45
31116	Finger—Trip lever friction finger assembly (7)	.45
31119	Gear—Long arm and rack gear for front left-hand record post (8)	.60
31120	Gear—Short arm and rack gear for rear right-hand record post (9)	.50
31121	Gear—Record post gear (10)	.90
31123	Guide—Main lever spring guide (11)	.40
31114	Lever—Index lever assembly (12)	.75
31137	Lever—Index lever tension spring lever (13)	.30
31138	Lever—Locating lever and pawl assembly (14)	.70
31113	Lever—Main lever assembly (15)	1.35
31140	Lever—Pickup lift cable lever and spring assembly (16)	.55
31135	Lever—Pickup locating lever assembly (17)	.85
31150	Lever—Record separator elevating lever complete with adjustment screws (18)	.80
31132	Lever—Trip detaining lever (19)	.30
31115	Lever—Trip lever assembly (20)	1.85
31131	Lever—Trip regulator lever (21)	.25
31133	Pawl—Trip pawl assembly (22)	.80
31124	Pin—Record post drive pin (23)	.04
14207	Roller—Pickup lift cable roller and bracket assembly (24)	.55
31118	Screw—Cone pointed set screw for trip lever hub or record post shelf	.06
4563	Screw—Pickup lift cable screw and nuts	.04
14195	Screw—Set screw for flexible coupling	.05
31117	Screw—Special screw to adjust friction clutch tension	.03
31126	Separator—Record separator knife (25)	.75
31122	Shaft—Record separator post shaft (26)	.40
31125	Shelf—Record post shelf assembly (27)	1.25
31141	Spindle—Turntable spindle shaft and spring	1.40
3678	Spring—Cam pawl tension spring on main gear (13 turns, .190-in. O.D., 43/64-in. lg.)	.04
14190	Spring—Pickup locating lever short spring or locating lever pawl tension spring (28) (16 turns, .180-in. O.D., 19/32-in. lg.)	.08
31145	Spring—Main lever tension spring (29) (18 turns, 9/16-in. O.D., 3-in. lg.)	.05
31136	Spring—Pickup locating lever long spring or index lever tension spring (30) (25 turns, .190-in. O.D., 15/16-in. lg.)	.05
3666	Spring—Pickup lift cable tension spring (31) (20 turns, .195-in. O.D., 1-in. lg.)	.04
31127	Spring—Record separator pressure spring (32) (6 turns, ¾-in. O.D., ¾-in. lg.)	.02
14191	Spring—Trip detaining lever or locating lever tension spring (33) (15 turns, .190-in. O.D., ¾-in. lg.)	.04
31142	Spring—Turntable spindle spring	.03
31147	Strip—Complete set of rubber strips for flexible coupling	.40
31139	Turntable Assembly—less spindle	3.35
31128	Washer—"C" washer for top of record post	.04
31143	Washers—Turntable thrust washers (1 steel, 1 bronze, 1 felt)	.15
	MOTOR ASSEMBLIES Model U-130	
11703	Governor—Motor speed governor	3.05
31448	Motor—105-125 volts, 25 cycle (M2)	23.70
31163	Motor—105-125 volts, 50-60 cycle (M2)	20.50
31157	Motor—105-125 volts, 60 cycle (M2)	17.75
30870	Plug—2-contact male plug for motor power cable	.35
31447	Screw—Complete set of motor mounting screws, washers, and spacers—for 25 cycle models only	.40
31158	Screw—Complete set of motor mounting screws, washers, and spacers—for 50-60 cycle models only	.25
14206	Switch—Motor toggle switch (S7)	.90

ALL PRICES ARE SUBJECT TO CHANGE OR WITHDRAWAL WITHOUT NOTICE.

©John F. Rider, Publisher

MODEL 5U
Schematic

RCA MFG. CO., INC.

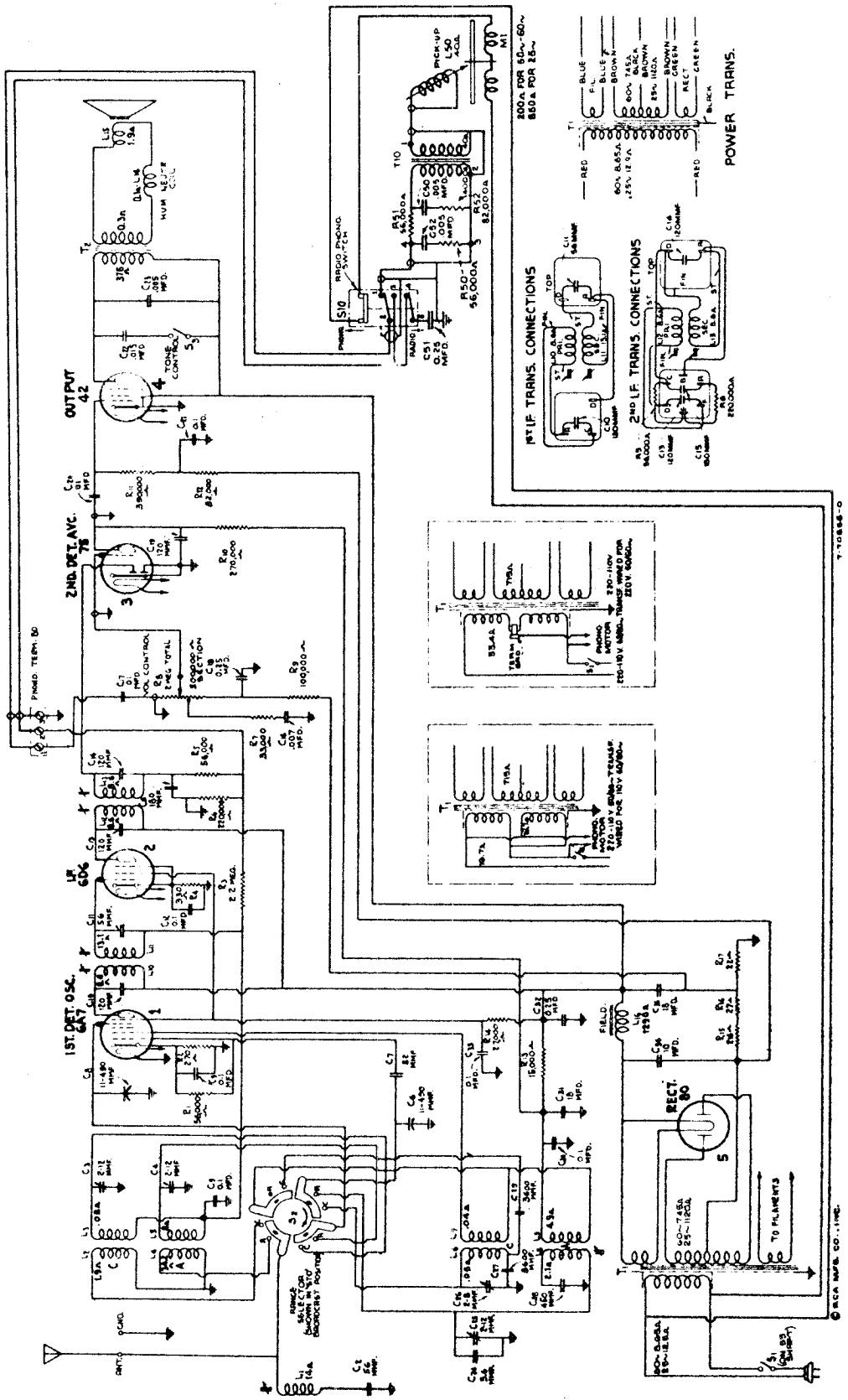

ALIGNMENT FREQUENCIES

FREQUENCY RANGES

"Standard broadcast" (A)	530-1,900 kc	"Standard broadcast" (A)	600 kc (osc.), 1,700 kc (osc., ant.)
"Short wave" (C)	5,800-21,600 kc	"Short wave" (C)	20,000 kc
Intermediate Frequency	460 kc		

©John F. Rider, Publisher

MODEL 5U
Chassis Wiring
Coils

RCA MFG. CO., INC.

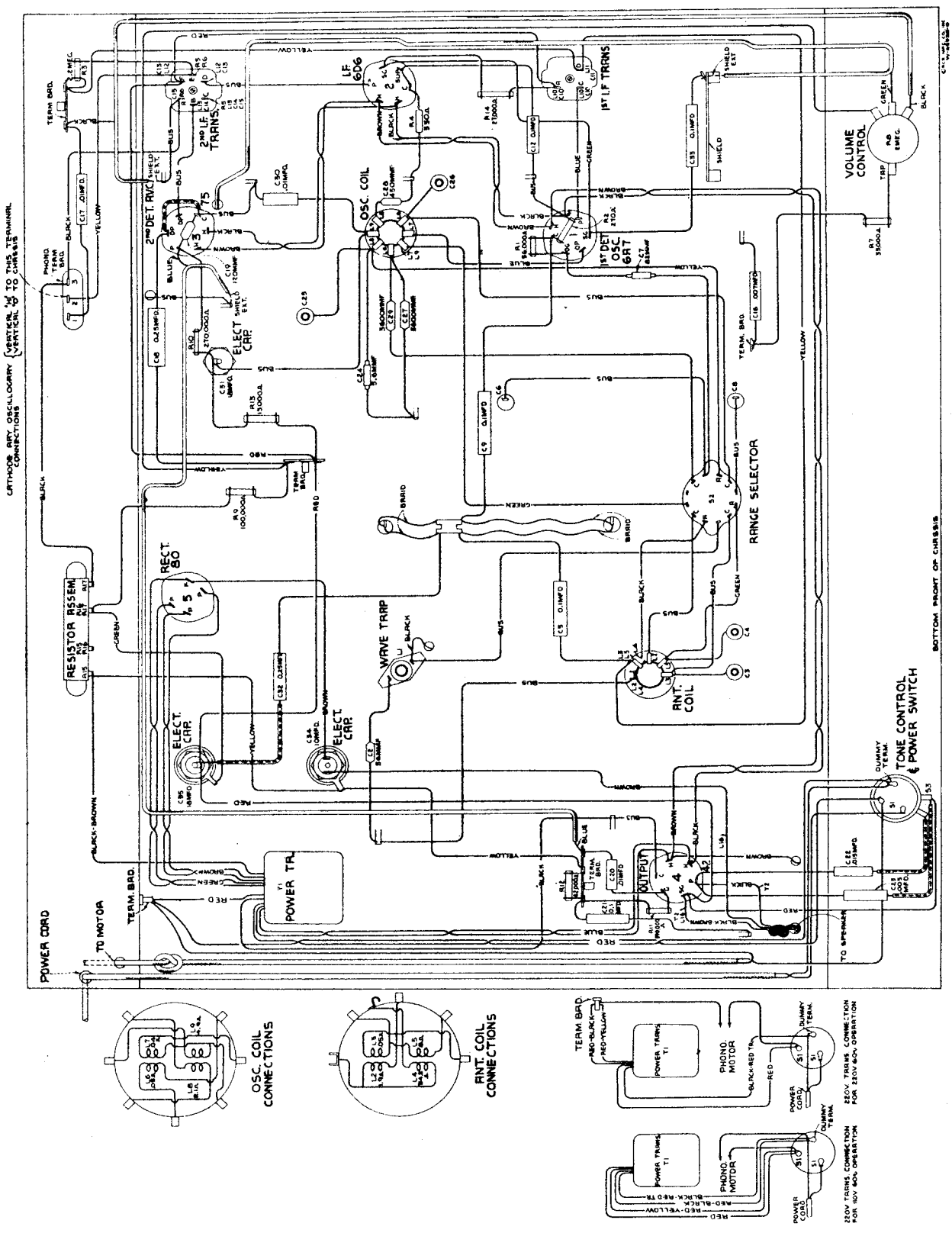

©John F. Rider, Publisher

MODEL 5U
Assembly Wiring

RCA MFG. CO., INC.

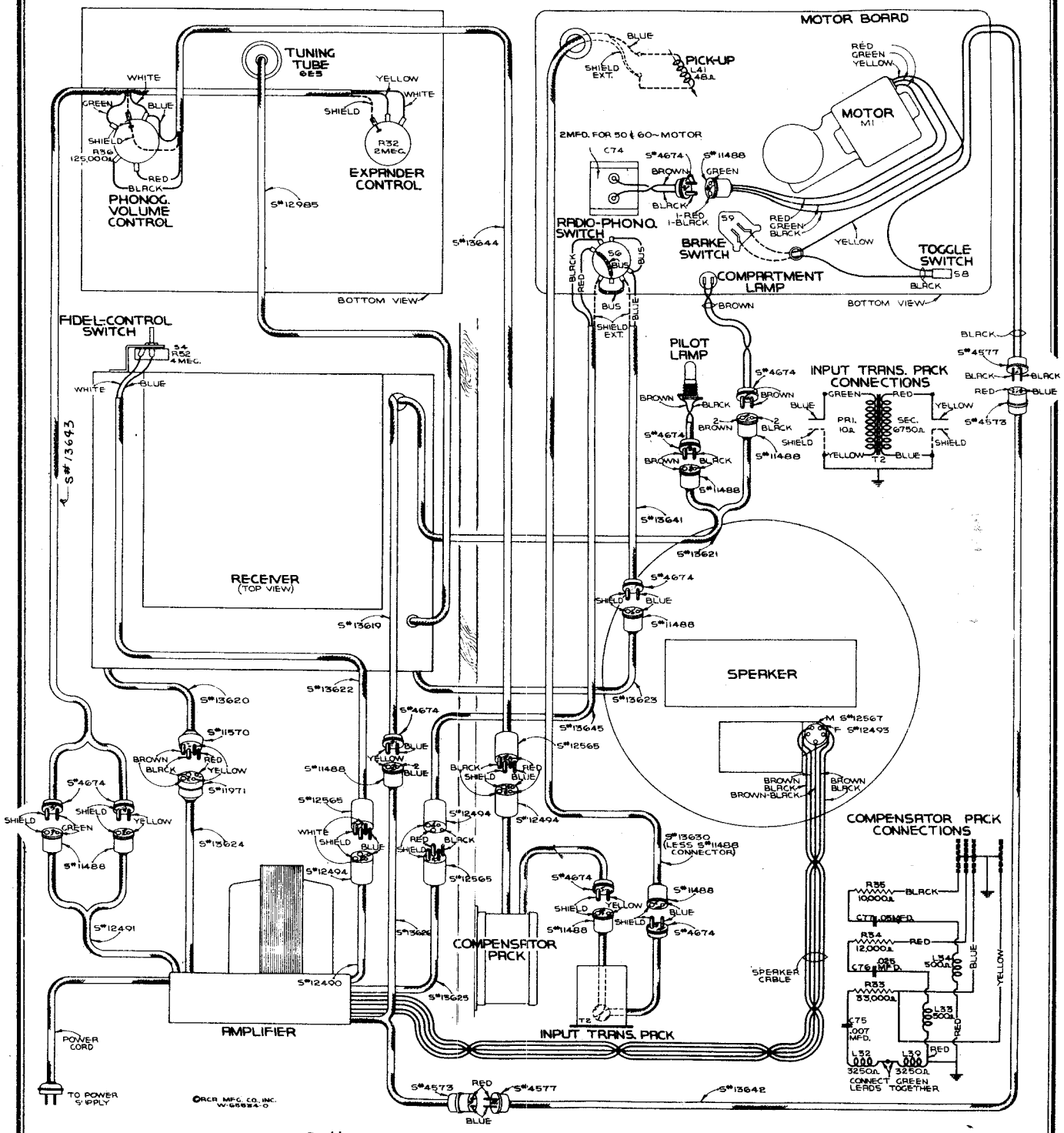

THE 'S' NUMBER ADJACENT CABLES AND PLUGS INDICATES STOCK NUMBER
ALL CABLES COMPLETE WITH PLUGS UNLESS OTHERWISE NOTED ADJACENT 'S' NUMBER

Figure 12—Assembly Wiring

©John F. Rider, Publisher

MODEL 5U
Socket, Trimmers
Pick-up, Motor Details
Phono Assembly Wiring

RCA MFG. CO., INC.

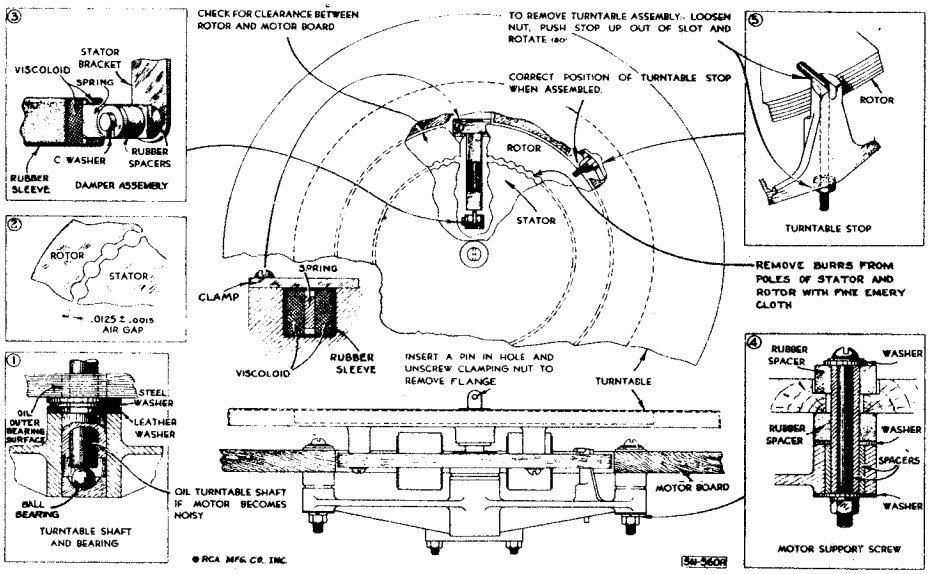

Figure 7—Details of Motor

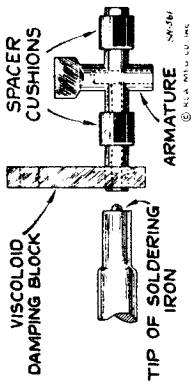

Figure 10—Special Soldering-Iron Tip

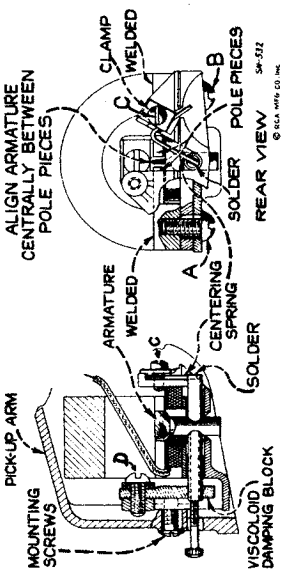

Figure 9—Details of Pickup

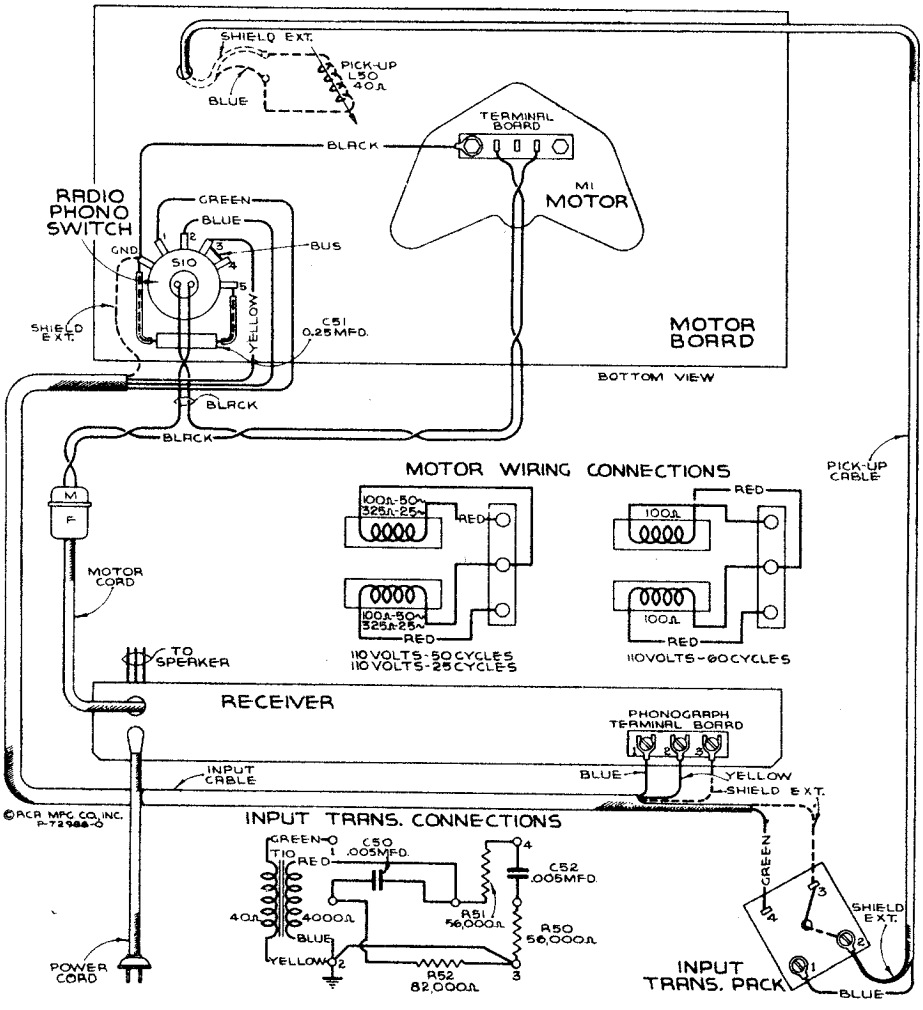

Figure 8—Assembly Wiring

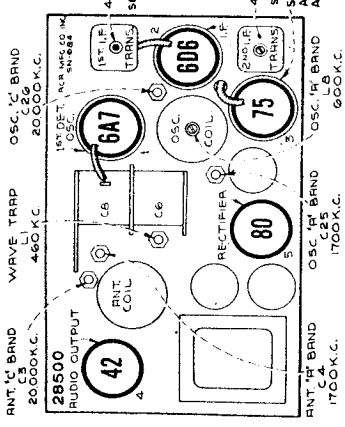

Figure 3—Radiotron, Coil, and Trimmer Locations

©John F. Rider, Publisher

RCA MFG. CO., INC.

MODEL 5U
Voltage, Resistance
Speaker Wiring

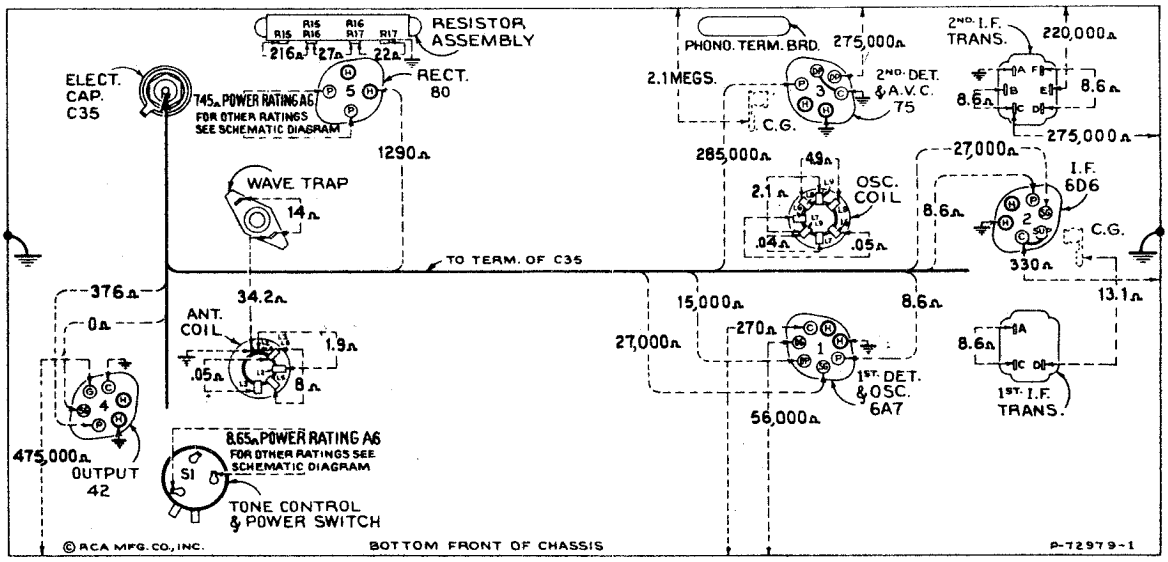

Figure 5—Resistance Diagram

Power supply disconnected—Radiotrons in sockets—Tuning condenser in full mesh—Range selector "Standard broadcast"—Radio-Phono "Radio"—Volume control maximum

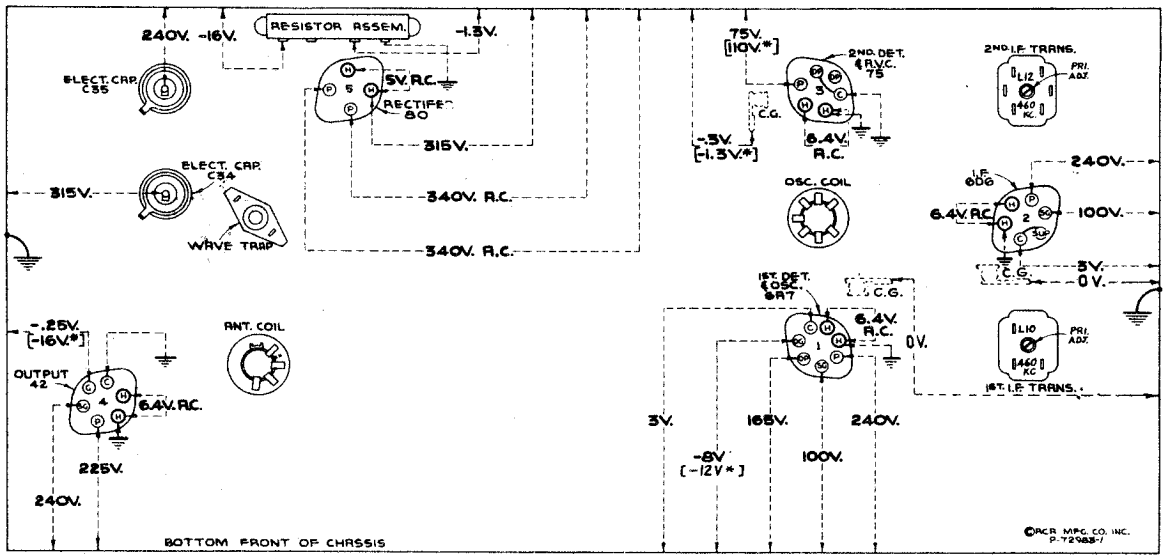

Figure 6—Radiotron Socket Voltages, Coil and Trimmer Locations.

Measured at 115 volts, 60-cycle supply—Tuned to approximately 1,000 kc ("Standard broadcast")—Radio-Phono "Radio"—No signal being received—Volume control minimum

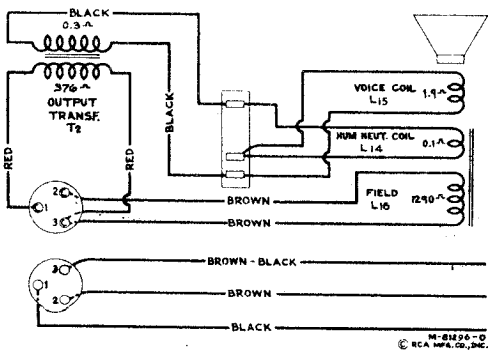

Figure 4—Loudspeaker Wiring

***Note:** Two voltage values are shown for some readings. The value shown in parentheses with asterisk (*) indicates operating conditions without voltmeter loading. The other value (generally lower) is the actual measured voltage and differs from the value shown in parentheses because of the additional loading of the voltmeter through the high series circuit resistance.*

Radiotron Plate Current Readings

Measured with Milliammeter Connected at Tube Socket Plate Terminals Under Conditions Similar to Those of Voltage Measurements

(1) RCA-6A7—1st Det.—Osc.	11	ma.
(2) RCA-6D6—I. F. Amp.	10	ma.
(3) RCA-75—2nd Det., A.V.C. and A. F.	0.22	ma.
(4) RCA-42—Power Amp.	42	ma.
(5) RCA-80—Rectifier	63	ma.*

(*Cannot be measured at socket.)

©John F. Rider, Publisher

©John F. Rider, Publisher

Alignment Procedure

There are five alignment trimmers provided in the antenna transformer and oscillator coil tuned circuits. The i-f transformer and wave-trap adjustments are made by means of screws attached to molded magnetite cores. All of these circuits have been accurately adjusted during manufacture and should remain properly aligned unless affected by abnormal conditions or altered during servicing. Loss of sensitivity, improper tone quality, and poor selectivity are the usual indications of improper alignment.

The correct performance of this receiver can only be obtained when the aligning has been done with adequate and reliable apparatus. The manufacturer of this receiver has available for sale, through its distributors and dealers, a complete assortment of such service equipment as may be needed for the alignment operation.

A test oscillator, such as the **RCA Stock No. 9595**, is required as a source of the specified alignment frequencies. Visual indication of receiver output during the adjustment is necessary and should be accomplished by the use of an indicator such as the **RCA Stock No. 4317 Neon Output Indicator.**

During alignment, the Radio-Phono control should be thrown to "Radio" position. The procedure outlined below should be followed in adjusting the various trimmer capacitors and molded cores:

I-F Adjustments

The four adjustment screws (attached to molded magnetite cores) of the two i-f transformers (one on top and one on bottom of each i-f transformer) are located as shown by figures 3 and 6. Each circuit must be aligned to a basic frequency of **460 kc.** To do this, attach the output indicator across the loudspeaker voice coil.

Connect the output of the test oscillator to the control grid of the RCA-6A7 through a **.001 mfd.** capacitor. Connect the test oscillator **"Gnd"** terminal to the ground terminal of the receiver chassis. Tune the oscillator to **460 kc.** Advance the receiver volume control to its full-on position and adjust the receiver tuning control to a point, within its range, where no interference is encountered from local broadcast stations or from the local (heterodyne) oscillator. To eliminate signals from the local oscillator short stator of C6 to chassis-ground. Increase the output of the test oscillator until a slight indication is present on the output indicator. Adjust the two magnetite core screws of the second i-f transformer **L13** and **L12** to produce maximum (peak) indicated receiver output. Then adjust the two magnetite core screws **L11** and **L10** of the first i-f transformer for maximum (peak) receiver output as shown by the indicating device. During these adjustments, regulate the test oscillator output so that the indication is always as low as possible. By doing so, broadness of tuning due to a.v.c. action will be avoided. It is advisable to repeat the adjustment of all i-f magnetite core screws to assure that the interaction between them has not disturbed the original adjustment. Remove temporary chassis-ground jumper from stator of C6.

R-F Adjustments

Calibrate the tuning dial by adjusting the scale pointer to the extreme end calibration mark (beyond 55 on dial) while the two-gang tuning condenser plates are in full mesh.

Wave-Trap Adjustment

Attach the output of the test oscillator to the receiver "Antenna" terminal through a **200 mmfd. (important)** capacitor. The ground connections remain connected together. Leave the test oscillator tuned to **460 kc.** Adjust range selector to "Short wave" (C) position. Then adjust the wave-trap screw to the point which causes maximum suppression (minimum received) of the **460 kc** signal.

"Standard Broadcast" Band

(a) Adjust range selector to "Standard broadcast" (A) position. Reduce output of test oscillator to a minimum. Tune the test oscillator to **600 kc** and set receiver dial pointer to **600 kc.** Adjust output of test oscillator until a slight indication of output is visible.

(b) Adjust the oscillator magnetite core screw **L8** (top of oscillator coil) so that maximum (peak) indicated output results.

(c) Set receiver dial pointer to **1,700 kc.** Tune the test oscillator to **1,700 kc.** Carefully adjust the oscillator and antenna trimmers **C25** and **C4** respectively so that each brings about maximum (peak) indicated output.

(d) Tune the test oscillator to **600 kc.** Adjust the receiver to pick up this signal disregarding the dial reading at which it is best received. Adjust oscillator magnetite core screw **L8** (top of oscillator coil) for maximum (peak) output while rocking gang tuning condenser. After completing this adjustment, the trimmers **C25** and **C4** should be re-adjusted as in (c) to correct for any change in the oscillator high-frequency tuning which has been caused by the preceding adjustment.

"Short-Wave" Band

(e) Connect the "Ant." output of the test oscillator to the "Antenna" terminal through a **300-ohm** resistor, leaving the "Gnd." of the oscillator connected to the receiver chassis.

(f) Adjust range selector to its "Short wave" (C) position. Set receiver dial pointer to **20,000 kc.** Tune test oscillator to **20,000 kc.** Set oscillator trimmer **C26** to minimum capacity (plunger full out), and antenna trimmer **C3** to maximum capacity (plunger full in). Slowly push in oscillator trimmer **C26** until maximum (peak) output is reached. Two peaks may be found. Adjust **C26** to the peak with minimum capacity (plunger near out) for maximum indication. Tighten lock nut. Slowly pull out plunger of antenna trimmer **C3** until maximum (peak) indicated output is reached while slightly rocking the gang tuning condenser back and forth through the signal. Two peaks may be found with this circuit. The peak with maximum capacity (plunger near in) should be used. Tighten lock nut.

Phonograph Mechanism

The phonograph motor is of the synchronous type and designed to be simple and foolproof. Under normal operating conditions, service difficulties should be negligible. Occasionally, however, certain adjustments may be required. These adjustments are illustrated and explained in figure 7.

Centering Armature

Refer to figure 9 showing the pickup inner structure. The armature is shown in its proper relation to the magnet pole pieces, i. e., exactly centered. Whenever this centering adjustment has been disturbed it will be necessary to remove the pickup mechanism from the tone arm by removing the needle holding screw and the two mounting screws from the front of the tone arm, holding the pickup assembly to keep it from dropping. Unsolder the two leads from the lugs on the terminal board at the rear of the pickup. Insert a small rod or nail into the armature needle hole and replace the needle holding screw, tightening

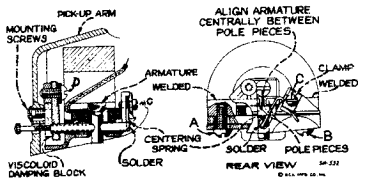

Figure 9—Details of Pickup

it to hold the rod securely. If the armature clamping screws A and B have not been disturbed, screw C should be loosened which will permit the armature to be moved from side to side, the rod acting as a lever to perform this operation. The proper adjustment is obtained when the armature is moved to the extreme position on each side (the movement being limited by the armature striking the pole pieces) and then brought to the mid position between these two extremes. Screw C should then be tightened. The armature position should then be central between the pole pieces and at right angles to them. With a little practice, the correct adjustment of the armature will be obtained. The air gap between the pole pieces and the armature should be kept free from dust, filings, and other foreign material which would obstruct the movement of the pickup armature.

Damping Block

The viscoloid damping block which is attached to the front end of the armature shank serves as a mechanical filter to eliminate undesirable resonances and to cause the frequency response to be uniform. Should it be necessary to replace this damping block, the pickup mechanism should be removed from the tone arm as explained above. Unsolder the pickup coil leads from the two lugs on the pickup terminal board and remove the terminal board mounting screw and the terminal board. Then remove screw D and the damping block from the pickup assembly. Make sure that the shaft of the armature which contacts the viscoloid is clean. Then insert the new damping block so that it occupies the same position as that of the original block, and is in correct vertical alignment with the armature. The hole in the block is somewhat smaller than the diameter of the armature in order to permit a snug fit. With the damping block properly aligned on the armature, screw D with its washer should then be replaced. Heat should be applied to the armature (viscoloid side) so that the damping block will fuse at the point of contact and become rigidly attached to the armature.

Loudspeaker

Centering of the loudspeaker voice coil is made in the usual manner with three narrow paper feelers after first removing the front paper dust cover. This may be removed by softening its cement with a very light application of acetone, using care not to allow the acetone to flow down into the air gap. The dust cover may be cemented back in place with ambroid upon completion of adjustment.

REPLACEMENT PARTS

Stock No.	DESCRIPTION	List Price
	RECEIVER ASSEMBLIES	
13216	Board—Antenna and ground terminal board	$0.25
12717	Board—Phonograph terminal board	.22
5237	Bushing—Variable condenser mounting bushing assembly—Package of 3	.43
12118	Cap—Grid contact cap—Package of 5	.15
12714	Capacitor—Adjustable trimmer (C3, C4, C25)	.38
12807	Capacitor—Adjustable trimmer (C26)	.35
12973	Capacitor—5.6 Mmfd. (C24)	.20
12723	Capacitor—56 Mmfd. (C2)	.20
12629	Capacitor—56 Mmfd. (C11)	.20
13394	Capacitor—82 Mmfd. (C7)	.20
12724	Capacitor—120 Mmfd. (C19)	.28
12404	Capacitor—120 Mmfd. (C10, C13, C14)	.26
12406	Capacitor—180 Mmfd. (C15)	.26
12812	Capacitor—450 Mmfd. (C28)	.25
12811	Capacitor—3.600 Mmfd. (C27, C29)	.35
4868	Capacitor—.005 Mfd. (C23)	.20
5148	Capacitor—.007 Mfd. (C16)	.20
11315	Capacitor—.015 Mfd. (C22)	.20
4858	Capacitor—.01 Mfd. (C17, C20, C30)	.25
4840	Capacitor—0.25 Mfd. (C18)	.30
5170	Capacitor—0.25 Mfd. (C32)	.25
4841	Capacitor—0.1 Mfd. (C5, C9, C12, C21, C33)	.22
11240	Capacitor—10 Mfd. (C34)	1.08
5212	Capacitor—18 Mfd. (C31, C35)	1.16
12797	Coil—Antenna coil and shield (L2, L3, L4, L5)	$1.30
12798	Coil—Oscillator coil and shield (L6, L7, L8, L9)	1.65
12701	Condenser—2-gang variable tuning condenser (C6, C8)	4.00
5119	Connector—3-contact female connector for speaker cable	.25
12006	Core—Adjustable core and stud for Stock Nos. 12653 and 12801	.22
12664	Core—Adjustable core and stud for Stock No. 12654	.22
13313	Dial—Station selector dial	.45
12702	Drive—Vernier drive for variable condenser	.68
13314	Indicator—Station selector indicator pointer	.15
5226	Lamp—Dial lamp, 6.3 volts—Package of 5	.70
13310	Resistor—Voltage divider comprising one 216-ohm, one 27-ohm and one 22-ohm sections (R15, R16, R17)	.55
6135	Resistor—270 ohms, carbon type, ¼ watt—Package of 5 (R2)	1.00
11296	Resistor—330 ohms, carbon type, ¼ watt—Package of 5 (R4)	1.00
12759	Resistor—15,000 ohms, carbon type, ½ watt—Package of 5 (R13)	1.00
12011	Resistor—27,000 ohms, carbon type, 1 watt—Package of 5 (R14)	1.10

MODEL 5U
Parts List, Part 2

RCA MFG. CO., INC.

Stock No.	DESCRIPTION	List Price
11364	Resistor—33,000 ohms, carbon type, ¼ watt—Package of 5 (R7)	$1.00
5029	Resistor—56,000 ohms, carbon type, ¼ watt—Package of 5 (R1)	1.00
11282	Resistor—56,000 ohms, carbon type, 1/10 watt—Package of 5 (R5)	.75
11365	Resistor—82,000 ohms, carbon type, ¼ watt—Package of 5 (R12)	1.00
5145	Resistor—100,000 ohms, carbon type, ¼ watt—Package of 5 (R9)	1.00
11398	Resistor—220,000 ohms, carbon type, 1/10 watt—Package of 5 (R6)	.75
11323	Resistor—270,000 ohms, carbon type, ¼ watt—Package of 5 (R10)	1.00
11847	Resistor—390,000 ohms, carbon type, ¼ watt—Package of 5 (R11)	1.00
11626	Resistor—2.2 meg., carbon type, ¼ watt—Package of 5 (R3)	1.00
12651	Shield—Antenna coil shield	.22
13311	Shield—Chassis end shield and rubber mounting foot assembly—Package of 2	.80
12607	Shield—First I. F. transformer shield top	.30
12008	Shield—I. F. transformer shield	.28
12799	Shield—Oscillator coil shield	.15
12581	Shield—Second I. F. transformer shield top	.36
3682	Shield—6A7 or 75 Radiotron shield	.22
3950	Shield—6D6 Radiotron shield	.26
4794	Socket—4-contact 80 Radiotron socket	.15
4786	Socket—6-contact 6D6, 42 or 75 Radiotron socket	.15
4787	Socket—7-contact 6A7 Radiotron socket	.15
11199	Socket—Dial lamp socket	.14
12007	Spring—Retaining spring for Stock Nos. 12006 and 12664—Package of 10	.36
12796	Switch—Range switch (S2)	1.00
13309	Switch—Tone control and power switch (S1, S3)	.55
12801	Transformer—First I. F. transformer complete (L10, L11, C10, C11)	1.70
12653	Transformer—Second I. F. transformer complete (L12, L13, C13, C14, C15, R5, R6)	2.06
13392	Transformer—Power transformer, 105-125 volts, 50-60 cycles (T1)	4.95
13566	Transformer—Power transformer, 105-125 volts, 25-50 cycles (T1)	4.80
13393	Transformer—Power transformer, 110 and 220 volts, 50-60 cycles (T1)	4.95
12654	Trap—Wave-trap complete (L1)	.75
13144	Volume control (R8)	1.00
	MOTOR ASSEMBLIES	
10194	Ball—Steel ball bearing—Package of 20	.25
11740	Base—Motor base and bearing assembly	1.45
11733	Coil—Stator assembly, comprising coil and laminations, 105-125-volt, 60-cycle operation	2.96
11734	Coil—Stator assembly, comprising coil and laminations, 105-125-volt, 50-cycle operation	3.08
11735	Coil—Stator assembly, comprising coil and laminations, 105-125-volt, 25-cycle operation	3.08
13081	Coil—Stator coil assembly, comprising coil and laminations, 200-250-volt, 50-cycle operation	4.60
11748	Damper—Motor damper assembly, comprising one damper, one damper plate, one screw, two rubber washers and one "C" washer	.20
12082	Motor—105-125-volt, 60-cycle motor (M1)	11.10
12083	Motor—105-125-volt, 50-cycle motor (M1)	$11.10
9733	Motor—105-125-volt, 25-cycle motor (M1)	11.00
9734	Motor—200-250-volt, 50-cycle motor (M1)	10.50
4456	Motor accessories—Comprising three nuts, one shield and one screw	.10
12048	Turntable—Turntable assembly complete with rotor laminations, 60-cycle operation	4.80
13084	Turntable—Turntable assembly complete with rotor laminations—25-cycle operation	5.45
12049	Turntable—Turntable assembly compelte with rotor laminations, 50-cycle operation	4.80
4083	Washer—Leather washer—Package of 10	.20
4084	Washer—Metal washer—Package of 10	.26
	PICKUP AND ARM ASSEMBLIES	
3812	Armature—Pickup armature (L50)	.32
13568	Coil—Pickup coil	.60
4543	Damper—Damper block complete with damper clamp, washer	.10
13567	Pickup and arm assembly complete	7.10
3811	Screw—Needle holding screw—Package of 10	.46
	REPRODUCER ASSEMBLIES	
12641	Board—3-contact reproducer terminal board	.15
12640	Bracket—Output transformer mounting bracket	.18
12012	Coil—Field coil (L16)	1.85
11469	Coil—Neutralizing coil (L14)	.20
12642	Cone—Reproducer cone and dust cap (L15)	.94
5118	Connector—3-contact male speaker cable connector	.25
9699	Reproducer—Complete	6.38
11253	Transformer—Output transformer (T2)	1.56
11886	Washer—Spring washer to hold field coil securely—Package of 5	.20
	MISCELLANEOUS ASSEMBLIES	
13564	Cable—3-conductor shielded input cable, approximately 32½ inches long, connects receiver to radio-record switch	.50
4840	Capacitor—0.25 Mfd. (C51)	.30
12785	Crystal—Station selector escutcheon and crystal	1.00
12699	Knob—Large station selector knob—Package of 5	.68
12700	Knob—Small (vernier) station selector knob—Package of 5	.58
11347	Knob—Volume control, tone control, range switch or radio-record switch knob—Package of 5	.75
11377	Screw—Chassis mounting screw assembly, comprising one screw, one washer and one lockwasher—Package of 4	.12
11869	Screw—Motor mounting screw assembly, comprising one screw, three metal washers, two rubber washers, one lockwasher, two spacers and one nut—Package of 3	.32
11349	Spring—Retaining spring for knob, Stock Nos. 11347 and 12700—Package of 5	.25
4982	Spring—Retaining spring for knob, Stock No. 12699—Package of 10	.50
13563	Switch—Radio-record switch (S10)	1.05
13565	Transformer—Phonograph input transformer (T10, C50, C52, R50, R51, R52)	2.95

Prices quoted above are subject to change without notice.

©John F. Rider, Publisher

MODELS HF-6,HF-8,
U132,U134
Motor,Gear Mechanism

RCA MFG. CO., INC.

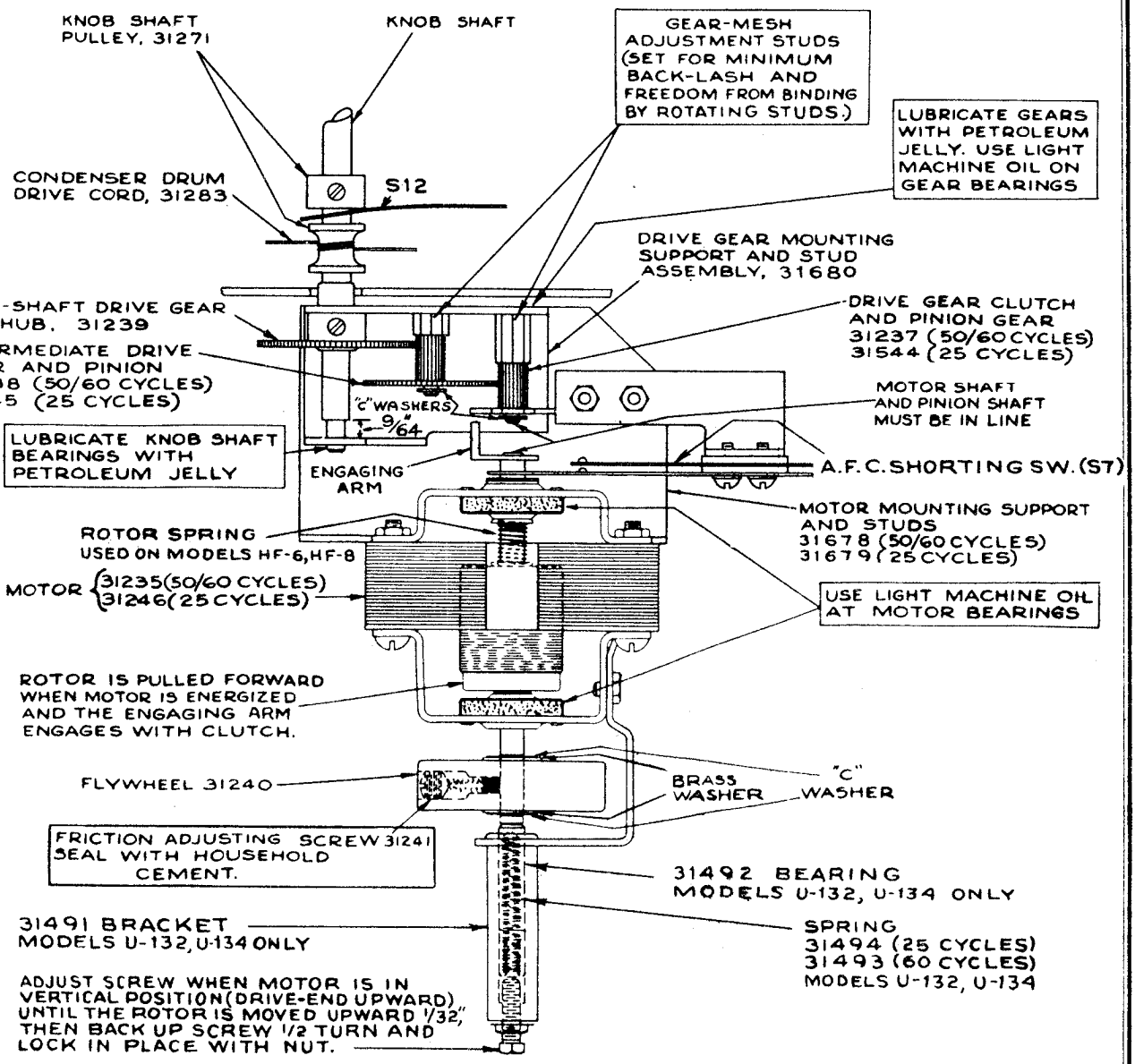

Motor and Gear Mechanism

There must be 1/32-inch clearance between the end of the engaging arm and the face of the intermediate gear when the motor is in its full forward position.

Lubrication

Motor bearings and **gear bearings;** use light machine oil.

Gear faces; use "Pure Oil No. 611" or petroleum jelly.

Dial-indicator pulleys and **rails;** use "Castordag" or petroleum jelly.

Selector disc; apply ***thin*** film of petroleum jelly.

Friction leather on flywheel; apply "neats-foot" oil. When replacing leather, soak it for at least 24 hours in neats-foot oil, and insert in flywheel while dripping.

Adjustments

To adjust S12, loosen knob shaft pulley, and adjust it so that when shaft is pushed all the way in, the ends of the leaves of S12 will be deflected 1/32-inch from their original position. When tuning shaft is released, distance between contacts of S12 should be 1/32-inch.

S7 should be adjusted so that when motor is in its full forward or upward position, the ends of the leaves should be deflected 1/32-inch from their original position.

©John F. Rider, Publisher

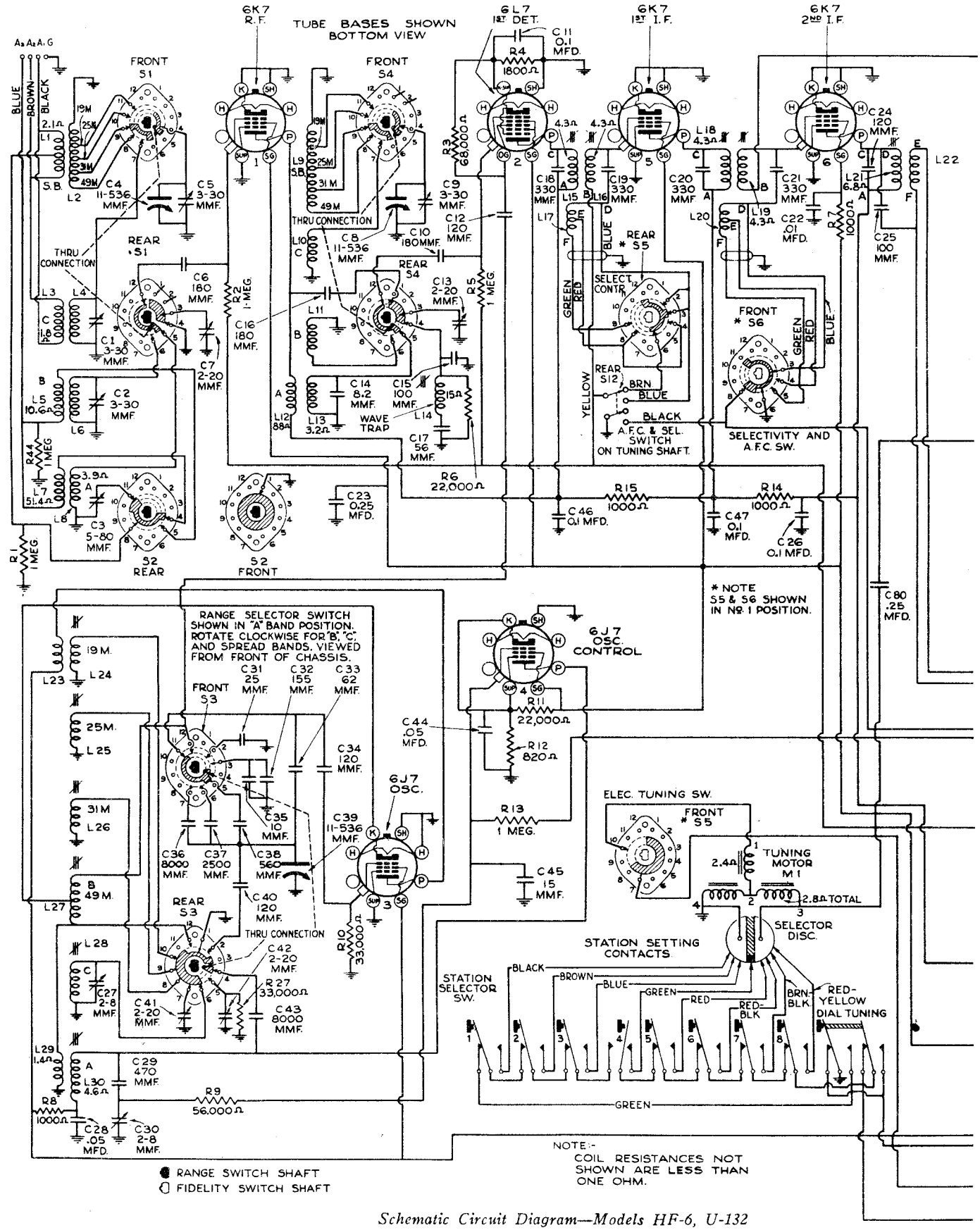

Schematic Circuit Diagram—Models HF-6, U-132

©John F. Rider, Publisher

G. CO., INC.

MODELS HF-6, U132
Schematic

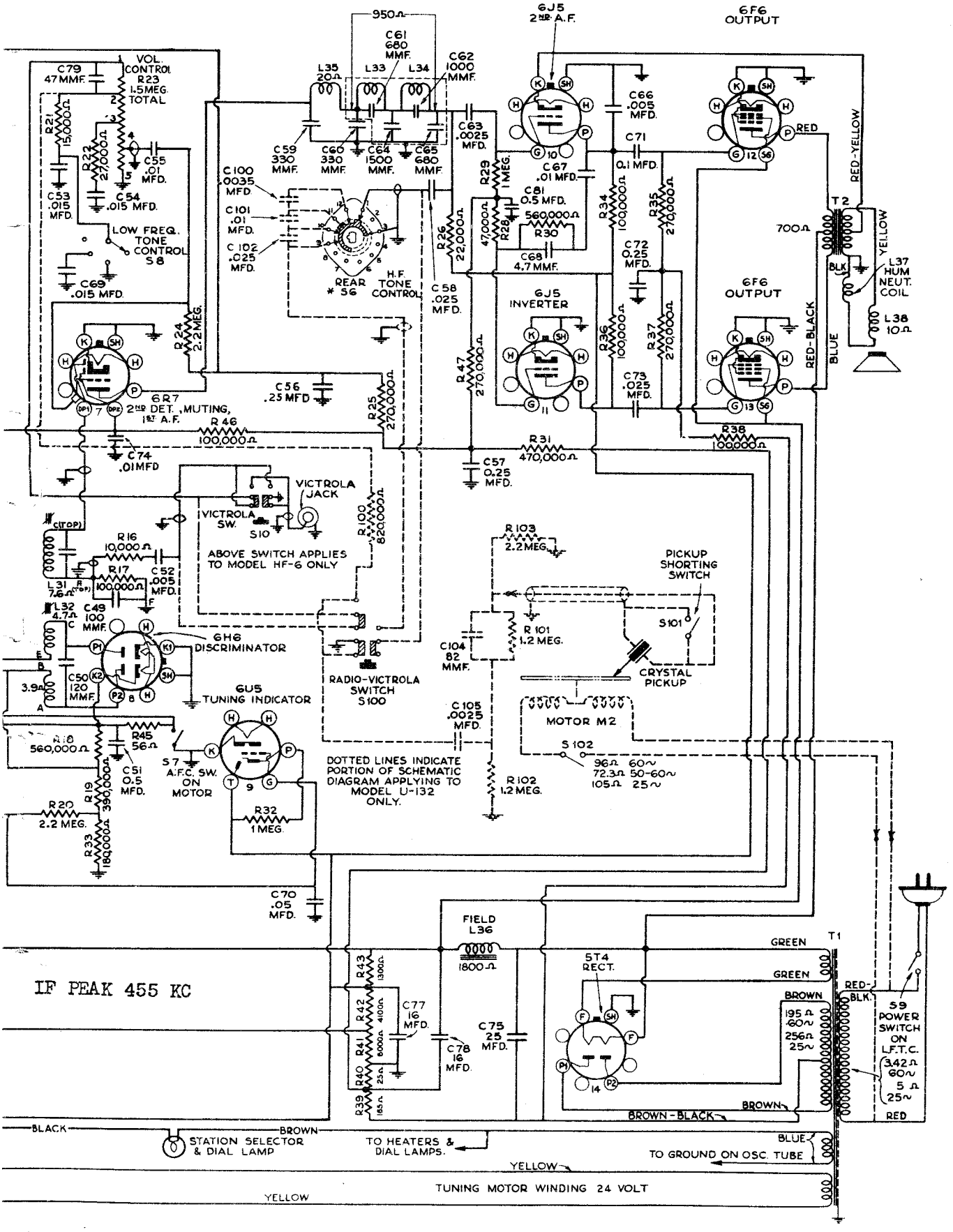

MODELS HF-8, U134
Schematic

RC

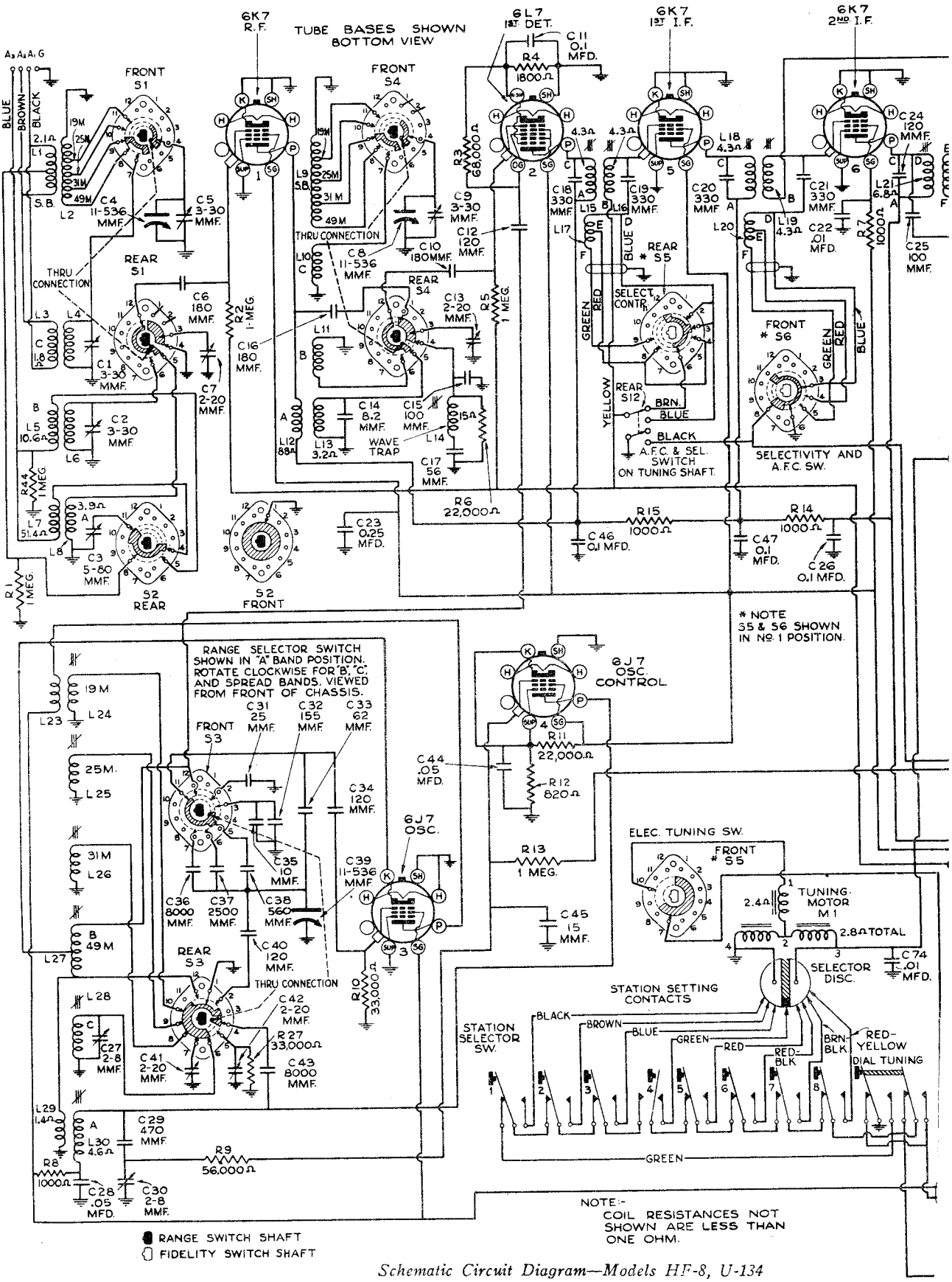

Schematic Circuit Diagram—Models HF-8, U-134

©John F. Rider, Publisher

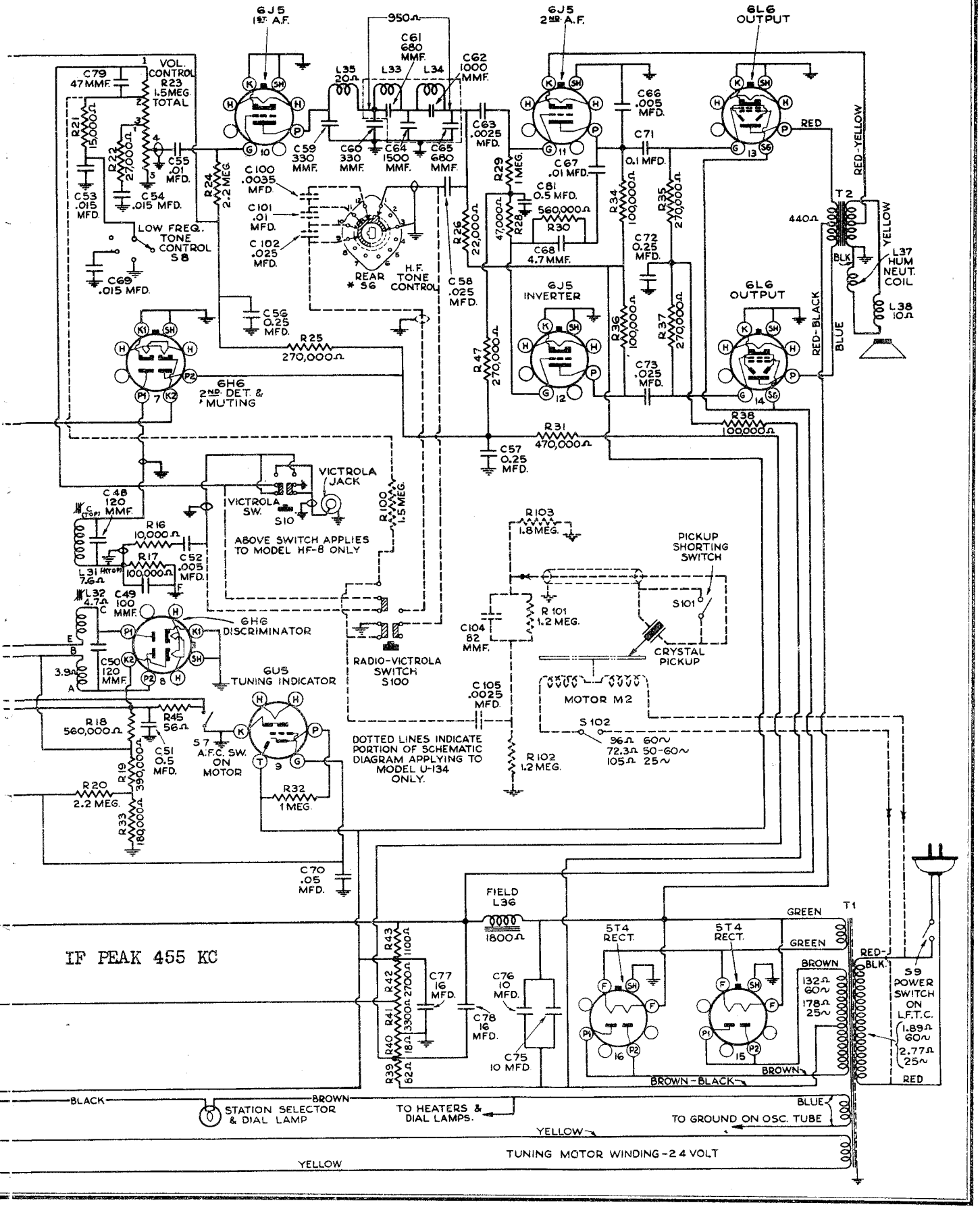
6J5 1ST A.F.
6J5 2ND A.F.
6L6 OUTPUT
6J5 INVERTER
6L6 OUTPUT
6H6 2ND DET. & MUTING
6H6 DISCRIMINATOR
6U5 TUNING INDICATOR
950Ω
VOL. CONTROL R23 1.5MEG. TOTAL
LOW FREQ. TONE CONTROL S8
H.F. TONE CONTROL
REAR * S6
VICTROLA JACK
VICTROLA SW. S10
ABOVE SWITCH APPLIES TO MODEL HF-8 ONLY
RADIO-VICTROLA SWITCH S100
PICKUP SHORTING SWITCH
S101
CRYSTAL PICKUP
MOTOR M2
S102
96Ω 60~
72.3Ω 50-60~
105Ω 25~
S7 A.F.C. SW. ON MOTOR
DOTTED LINES INDICATE PORTION OF SCHEMATIC DIAGRAM APPLYING TO MODEL U-134 ONLY.
FIELD L36
1800Ω
5T4 RECT.
5T4 RECT.
T1
T2
440Ω
L37 HUM NEUT. COIL
L38 10Ω
S9 POWER SWITCH ON L.F.T.C.
1.89Ω 60~
2.77Ω 25~
132Ω 60~
178Ω 25~
RED
YELLOW
BLK
GREEN
BROWN
RED-BLK.
RED-YELLOW
RED-BLACK
BLUE
BROWN-BLACK
BLACK
STATION SELECTOR & DIAL LAMP
TO HEATERS & DIAL LAMPS.
TO GROUND ON OSC. TUBE
TUNING MOTOR WINDING-24 VOLT
IF PEAK 455 KC

RCA MFG. CO., INC.

MODELS HF-6, U132
Chassis Wiring
Voltage

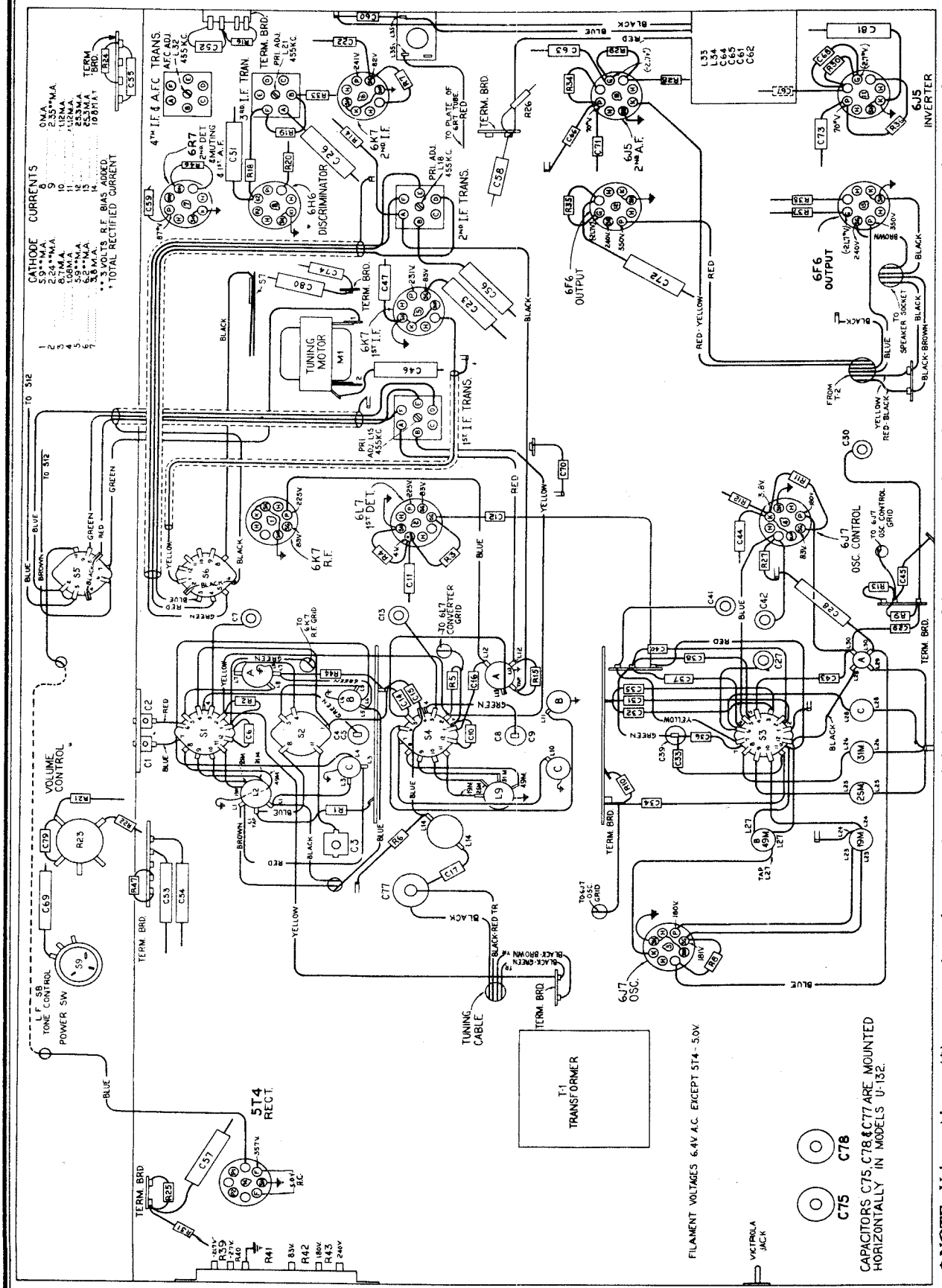

Measurements made to chassis unless otherwise indicated, with set tuned to quiet point and volume control at minimum. Values should hold within approximately ±20% with 117-volt a-c supply.

* **NOTE:** Values with star (*) are operating voltages in circuits with high series resistance. The actual measured voltages will be lower, depending on the voltmeter loading.

©John F. Rider, Publisher

MODELS HF-8,U134
Chassis Wiring
Voltage

RCA MFG. CO., INC.

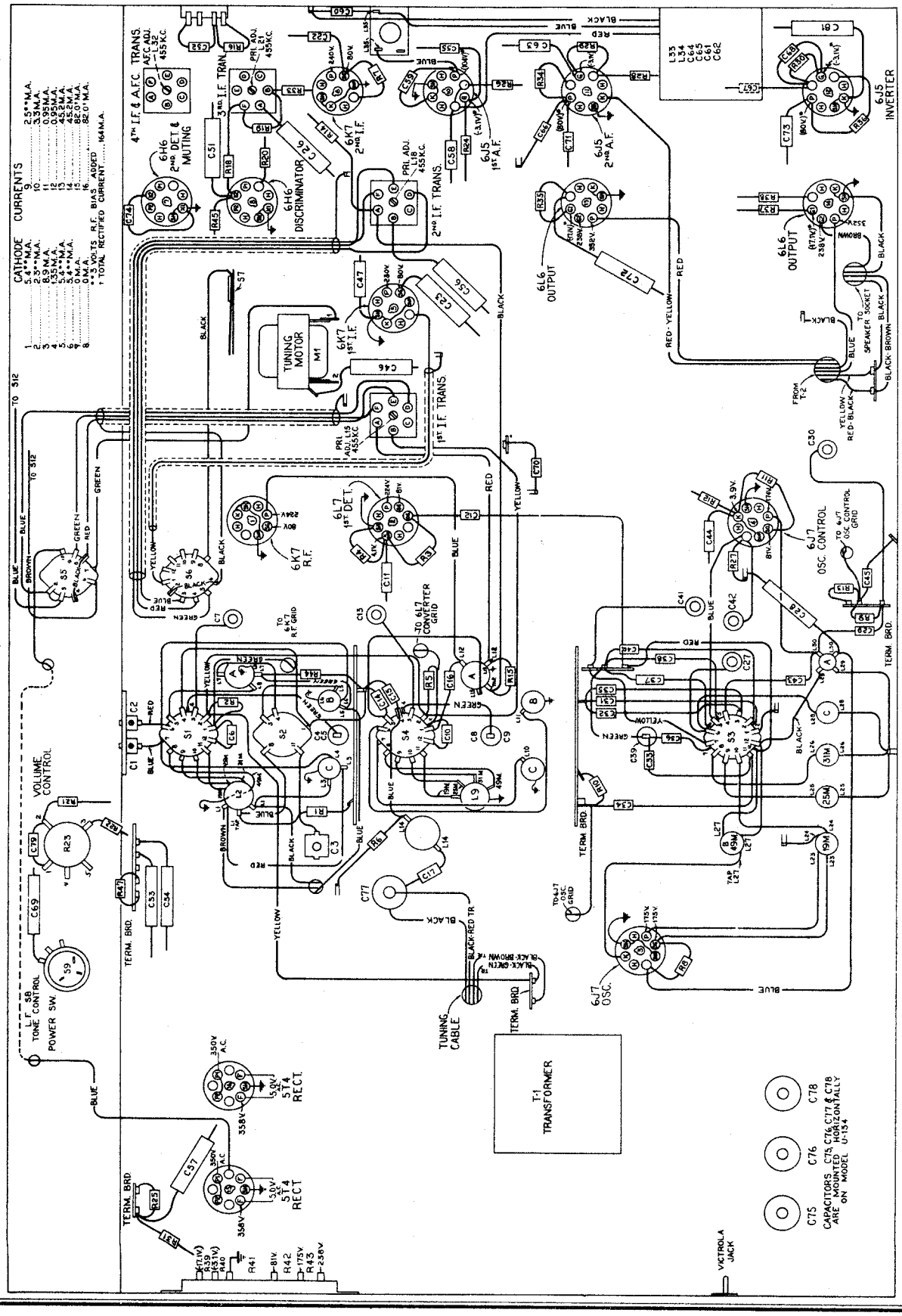

R-F Wiring, Parts Location and Socket Voltage Diagram—Models HF-8, U-134

***NOTE:** Values with star (*) are operating voltages in circuits with high series-resistance. The actual measured voltages will be lower, depending on the voltmeter loading.

Measurements made to chassis unless otherwise indicated, with set tuned to quiet point and volume control at minimum. Values should hold within approximately ±20% with 117-volt a-c supply.

©John F. Rider, Publisher

RCA MFG. CO., INC.

MODELS HF-6, U132
HF-8, U134
Socket, Trimmers

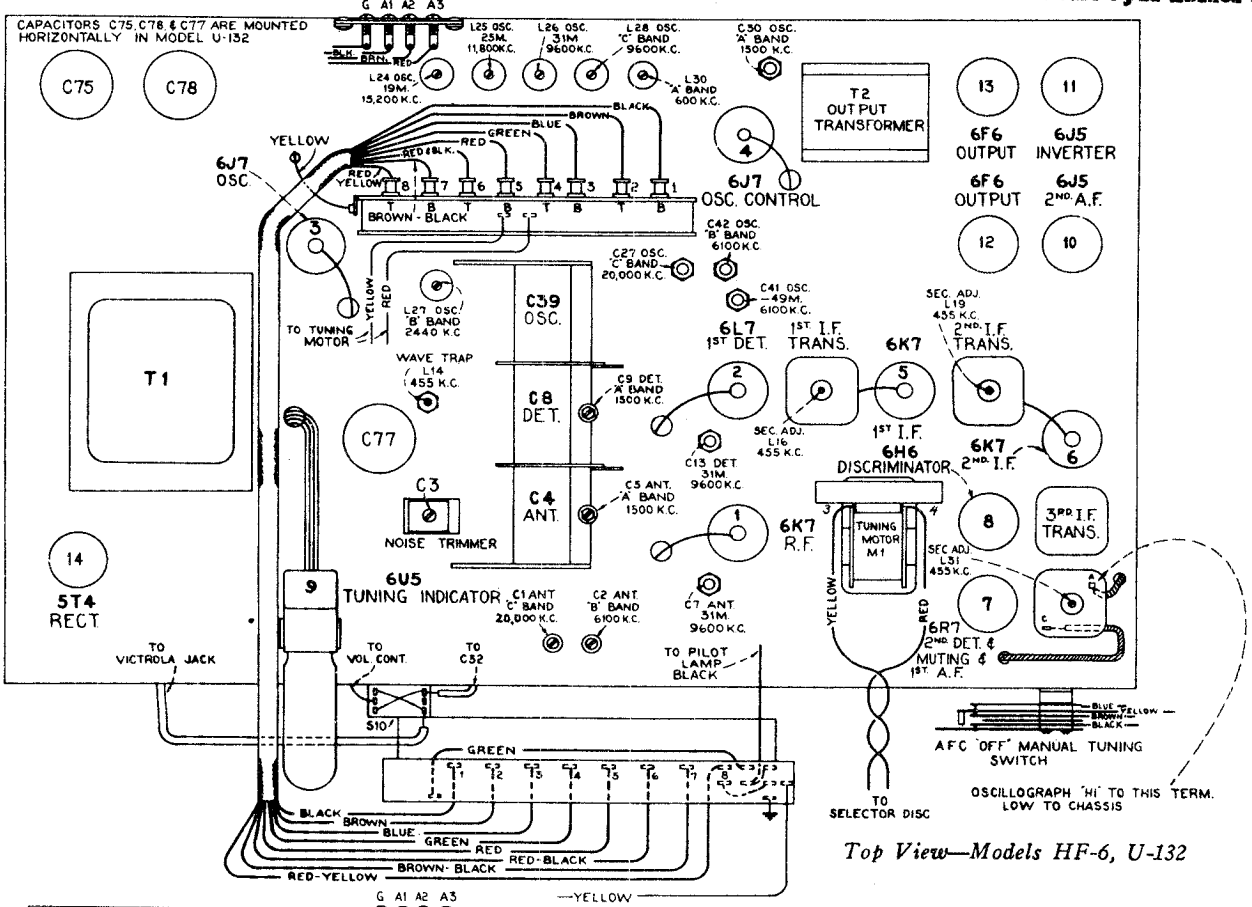

Top View—Models HF-6, U-132

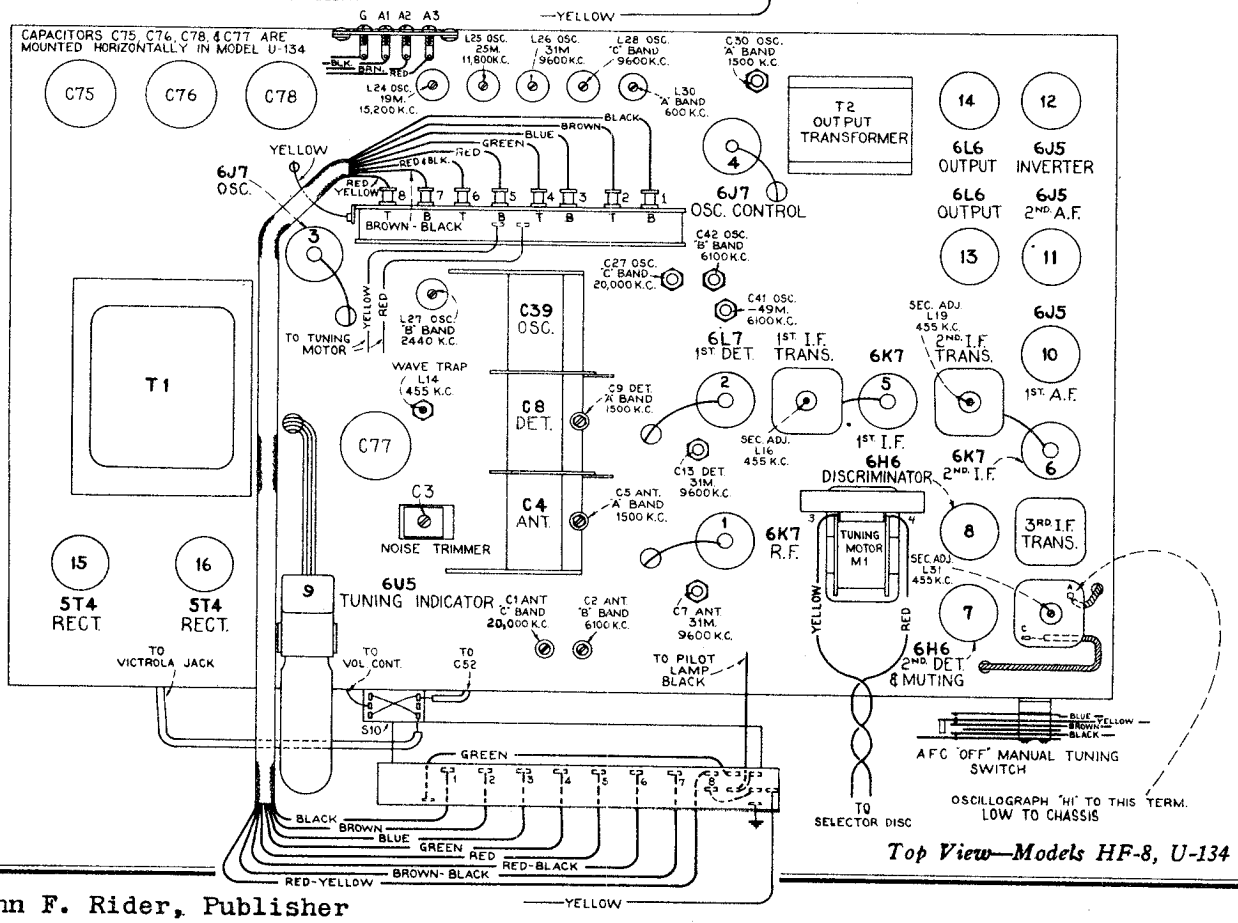

Top View—Models HF-8, U-134

©John F. Rider, Publisher

©John F. Rider, Publisher

Electrical Specifications

Frequency Ranges	
"Standard Broadcast" (A)	540-1,720 kc
"Medium Wave" (B)	2,300-7,000 kc
"Short Wave" (C)	7,000-22,000 kc
"49 Meter" Band	5,920-6,230 kc
"31 Meter" Band	9,480-9,700 kc
"25 Meter" Band	11,680-11,940 kc
"19 Meter" Band	15,080-15,390 kc
Intermediate Frequency	455 kc

R-F Alignment Frequencies	
"A" Band	600 kc (osc.); 1,500 kc (osc., ant., det.)
"B" Band	2,400 kc (osc.); 6,100 kc (osc., ant.)
"C" Band	9,600 kc (osc.); 20,000 kc (osc., ant.)
31 M	9,600 kc (osc., ant., det.)
49M	6,100 kc (osc.)
25M	11,800 kc (osc.)
19M	15,200 kc (osc.)

RCA Tube Complement (Models HF-8, U-134)		(Models HF-6, U-132)	
(1)	6K7	R-F Amplifier	
(2)	6L7	First Detector	
(3)	6J7	Oscillator	
(4)	6J7	Oscillator Control	
(5)	6K7	First I.F.	
(6)	6K7	Second I.F.	
(7)	6H6	Second Detector and Muting	
(8)	6H6	Discriminator and AVC	
(9)	6U5	Tuning Tube	
(10)	6J5	First Audio	
(11)	6J5	Second Audio	
(12)	6J5	Inverter	
(13)	6L6	Power Output	
(14)	6L6	Power Output	
(15)	5T4	Rectifier	
(16)	5T4	Rectifier	
(1)	6K7	R-F Amplifier	
(2)	6L7	First Detector	
(3)	6J7	Oscillator	
(4)	6J7	Oscillator Control	
(5)	6K7	First I.F.	
(6)	6K7	Second I.F.	
(7)	6R7	Second Detector, Muting, First A.F.	
(8)	6H6	Discriminator and AVC	
(9)	6U5	Tuning Tube	
(10)	6J5	Second Audio	
(11)	6J5	Inverter	
(12)	6F6	Output	
(13)	6F6	Output	
(14)	5T4	Rectifier	

Pilot Lamps (3)..... Radio: (2) 6.3 volts, 0.25 ampere Mazda No. 44; (1) 6.3 volts, 0.15 ampere Mazda No. 47
Phono: (1) 6.3 volts, 0.25 ampere Mazda No. 44

Power Supply Ratings	Model HF-6	Model HF-8
Rating A—105-125 volts, 50-60 cycles	135 watts	180 watts
Rating B—105-125 volts, 25 cycles	135 watts	180 watts
Rating C—100-130/140-160/195-250 volts, 50-60 cycles	135 watts	180 watts

	Model U-132		Model U-134	
	Radio Only	Total	Radio Only	Total
Rating A —105-125 volts, 50-60 cycles	135 watts	160 watts	180 watts	205 watts
Rating A6—105-125 volts, 60 cycles	135 watts	160 watts	180 watts	205 watts
Rating B2—105-125 volts, 25 cycles	135 watts	160 watts	180 watts	205 watts
Rating C —105-130/140-160/200-250 volts, 50-60 cycles	135 watts	160 watts	180 watts	205 watts
Rating C6—105-130/140-160/200-250 volts, 60 cycles	135 watts	160 watts	180 watts	205 watts

Power Output	(Models HF-8, U-134)	(Models HF-6, U-132)
Undistorted	20 watts	10 watts
Maximum	24 watts	12 watts

Loudspeaker
Type ..... 12-inch Electrodynamic (Triple Cone)
Voice Coil Impedance ..... 11.3 ohms at 400 cycles

Mechanical Specifications

Phonograph (Models U-132, U-134 Only)

Type ..... Automatic
Record Capacity ..... Eight 10-inch or seven 12-inch
Turntable Speed ..... 78 r.p.m. (adjustable)
Type Pickup ..... Crystal
Pickup Impedance ..... 80,000 ohms at 1,000 cycles

	Model HF-6	Model HF-8	Model U-132	Model U-134
Height (inches)	36	37	35¼	37
Width (inches)	36¾	36¼	37	39
Depth (inches)	17⅞	19⅜	18⅜	19
Weight (Net lbs.)	105	149	141	162
Weight (Shipping lbs.)	129	176	184	210
Chassis dimensions (inches)			4 x 12⅝ x 22⅜	
Maximum chassis height (inches)			11⅝	
Tuning drive ratio			18 to 1	

Miscellaneous Service Data

Antenna Connections

RCA Victor Master Antenna Kit.—Connect the twisted-pair transmission line to terminals A1 and A2 on the terminal board at rear of chassis. Connect the counter-poise to A3. Terminal G may be connected to ground, but this connection is not necessary for correct operation.

Noise-Reducing Adjustment.—After the RCA Victor Master Antenna Kit is connected to the receiver, tune the receiver to a point near 900 kc where no station is heard. Turn volume control clockwise until noise is heard. If no noise of a regular character is audible, start any brush-type motor-driven appliance, such as a vacuum cleaner, electric razor, refrigerator, etc., but do not bring it too near the receiver. This will generate noise as a continuous crackling, or buzz. Adjust C3 to a point where this noise is reduced to a minimum.

Adjustment of the noise reducing trimmer C3 should be made in the customer's home, with the RCA Victor Master Antenna connected to the receiver.

This adjustment is effective only when the RCA Victor Master Antenna is used. For all other types of antenna, the noise-adjusment trimmer should be screwed all the way down.

Other Antennas.—Use terminals A1 and A3 on the receiver terminal board as antenna and ground connecting points respectively. Terminal A3 may be connected to terminal G, unless this causes interference, in which case this connection should be omitted.

Loudspeaker.—No attempt should be made to remove the aluminum cone cap of the loudspeaker cone. This is securely cemented to the cone, and any attempt to remove it may result in serious damage to the cone assembly. The cone must be centered by moving the cone in and out and getting the "feel" of the cone to find where it is rubbing against the pole pieces. The two screws holding the spider support are accessible from the rear of the speaker. By loosening these screws and moving the cone by hand, it is possible to center the cone satisfactorily. Another method, which may be used, is to connect speaker to receiver, feed a low frequency note of from 40-60 cycles into the audio input of the set, and turning up the volume control — move the spider support until no rattle is heard in speaker, with about 10 watts output. Replacement cones will have to be centered in the same manner, as the cone will be supplied with cone cap fastened securely in position.

NOTE.—Due to inverse feedback used on these models, it is very important to connect output transformers exactly as shown in the schematic diagram.

Victrola Attachment.—A jack located on one side of the chassis is provided for connecting a Victrola Attachment into the audio-amplifying circuit on Models HF-6 and HF-8. The cable running from the Victrola Attachment should be terminated in a Stock No. 31048 plug to fit the jack.

General Description

Model HF-8 is a sixteen-tube "Magic Brain" superheterodyne receiver mounted in a handsomely styled Eighteenth Century type cabinet. The cabinet may be made of either of two kinds of woods, walnut veneer or mahogany. Features of design include: "Electric Tuning" for eight broadcast stations; Victrola attachment jack and push-button switch; magnetite-core tuned, i-f and oscillator coils; temperature stabilized capacitors; four short-wave broadcast spread bands; complete short-wave coverage with two complete short-wave bands; automatic volume control; aurally compensated volume control; "local," "distance," seven point high-fidelity and high frequency tone, control; low frequency tone control; 12 inch, triple-cone, high fidelity speaker; remote control armchair attachment; automatic frequency control with "Electric Tuning" and manual tuning; illuminated band indicator; noise reducing adjustment on "A" band; wave trap; "Magic Eye" tuning tube; 10 kc whistle filter; audio phase inverter; push-pull beam power output; and "Electrical Magic Voice."

Model HF-6 is a fourteen-tube "Magic Brain" superheterodyne receiver, mounted in a "Console Grand" cabinet of handsomely matched walnut veneers. Features of design are the same as the Model HF-8, except beam power output is replaced by push-pull pentode output; and two less tubes are used.

Model U-134 RCA Victrola is a combination radio receiver and phonograph mechanism mounted in an Eighteenth Century styled cabinet made of either superbly matched walnut veneers, or fine grain mahogany. The radio receiver is identical with that of the Model HF-8. The phonograph turntable is of a new design, and may be played manually or automatically. In manual operation, one 10-inch or one 12-inch record may be played at a time. In the automatic position, eight 10-inch, or seven 12-inch records may be played in succession. The pickup is automatically "shorted out," when placed on the pickup rest.

Model U-132 RCA Victrola is a combination radio receiver and phonograph mechanism mounted in a handsome, matched Eighteenth Century styled cabinet of walnut veneer. The radio receiver is the same as that of Model HF-6, and the turntable mechanism is the same as in Model U-134.

With the unusual characteristics of the instruments described above, naturally, as with other high quality, high fidelity instruments, proper operation is important for maximum satisfaction. The proper use of the Fidelity and tuning controls insures the ultimate in radio entertainment. The Fidelity control has seven positions, the purpose of which is fully explained in the table. In the full range position the reproduction is faithful from 40 to 7,500 cycles. A special filter is employed in the plate circuit of the first audio amplifier to reduce 10 kc whistle.

In the majority of cases, the high fidelity positions of the control, positions 5, 6, and 7, may be used on local stations to give true response of the broadcast program. However, on distant broadcast, or short wave stations, the receiver should be operated with the Fidelity control in 1, 3, or 4 position to eliminate cross talk, monkey chatter, and any other adjacent-channel interference.

The tuning control has a special function used in conjunction with the Fidelity control. When the tuning knob is pushed in, and the Fidelity control is in position No. 2, the i-f response of the receiver will return to its maximum selectivity position. Releasing the tuning knob will broaden the i-f channel as shown in the table. When the Fidelity control is in position No. 3 or 4, and Tuning control is pushed in, the AFC system will be rendered inoperative. With Fidelity control in No. 5, 6, or 7 position, pushing in Tuning control returns i-f channel to a sharp selectivity position, and renders AFC system inoperative. This function of the tuning control should be used when tuning in local, or medium-distant stations, manually. For distant stations, Fidelity control should be in No. 1 or No. 2 positions.

On Models U-132, U-134, the Fidelity control is also operative while records are being played—thus giving full Fidelity control, as desired, by changing response of audio amplifying system.

Electric Tuning Mechanism

The circuit of the electric tuning mechanism is shown in the schematic diagram, and the mechanical details are illustrated below.

The action can be understood by following a cycle of operation:

When a station button is pushed in, it completes the 24-volt circuit through the corresponding station-setting contact and one-half of the brass selector disc, which is connected to one side of the motor field coil. This energizes the motor, and the rotor is pulled forward, engaging with the gear train that drives the tuning condenser and selector disc. The condenser and disc rotate until the insulation line comes under the particular station-setting contact, and the motor circuit is broken. Inertia carries the insulation line past the station-setting contact which then makes contact to the other half of the disc. This completes the circuit to the other side of the motor field coil, causing the motor to reverse. The floating flywheel is still turning in the original direction and therefore slows down the reversal movement of the motor; as a result the selector disc is moved slowly back until the insulation line is under the station-setting contact, when the circuit is broken and the mechanism stops.

Muting Circuit

When the electric tuning mechanism is in action, the motor-supply voltage is fed into a diode rectifier circuit which applies a high bias to last I-F tube, 1st audio, 2nd audio and inverter tubes. This prevents audio amplification and makes the set quiet or "mute" while the mechanism is operating.

Adjustment of Flywheel Friction

In normal operation, the motor drives the tuning condenser and selector disc until the insulation line just passes the particular station-setting contact: The motor then reverses and moves the disc slowly in the opposite direction until the insulation line is under the contact, and the mechanism stops.

In some cases, particularly with high line-voltage, the disc may make two or three reversals before stopping.

The flywheel friction adjustment screw should be set to give the least number of reversals with the chassis in normal operating position.

Adjustment of Selector Disc

The brass selector disc is fastened to the rear shaft of the tuning condenser by means of two set-screws. When the condenser is at maximum (plates fully meshed) the insulation line should be horizontal, with the operating-end at the left (viewed from rear). The operating-end has dark insulating material and the brass is beveled at this end.

The selector disc should be set so that the contact-tip plungers in the station-setting contacts project not more than 1/16-in. from the body of the contacts.

Armchair Control Unit

When a Model G8A Armchair Control is connected to the receiver, as shown, it duplicates the action of the push buttons on the front panel, when "Dial or Remote" button is pushed in. The center lead of the remote control cable is connected to the terminal on the frame of the selector mechanism. The other leads are connected to corresponding station-setting contacts.

In operating the G8A Armchair Control, the push button must be held down until the station has been tuned in. Care must be taken not to hold two of the station buttons down at one time as both windings of the motor may be engaged simultaneously causing the motor to be inoperative and overheated.

FOR AUTOMATIC RECORD CHANGER,
SEE INDEX

©John F. Rider, Publisher

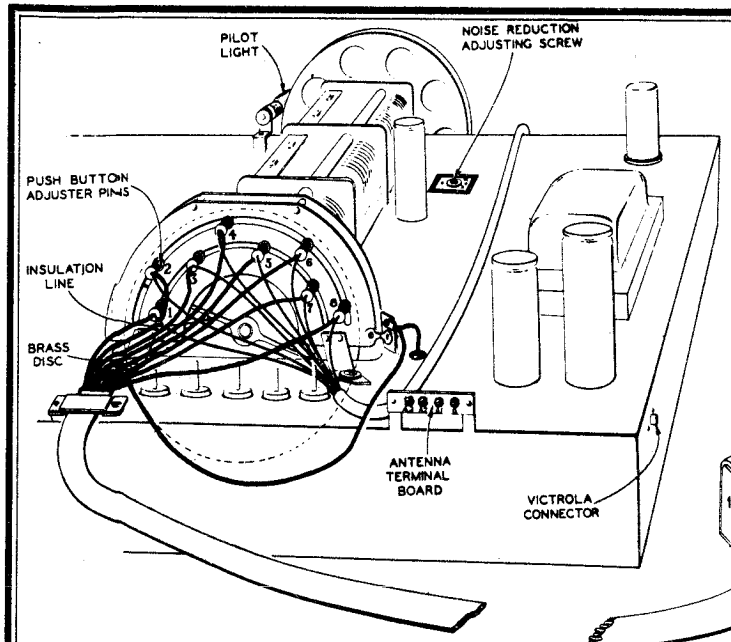

(110-volt supply for a Victrola motor is obtained by connecting the motor to the red and the red-black leads.)

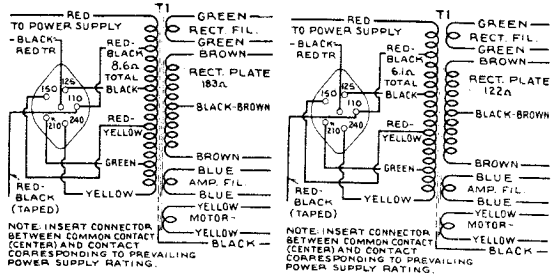

Models HF-6, U-132 *Models HF-8, U-134*

Universal Power Transformer Connections

Armchair Control Connections

ADJUSTMENTS FOR ELECTRIC TUNING

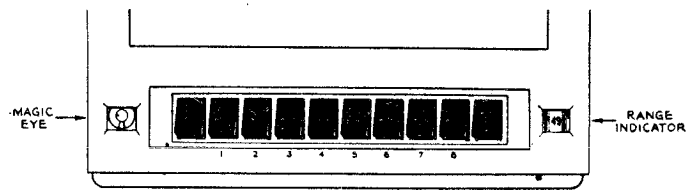

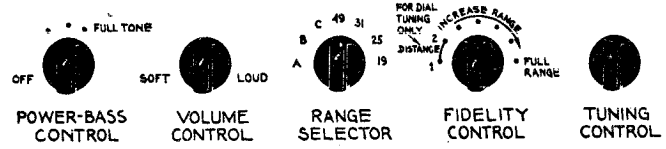

Location of Controls

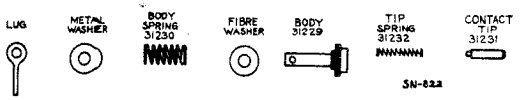

Component Parts of Station Setting Contacts

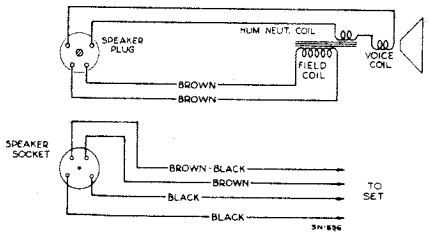

Connections to Loudspeaker

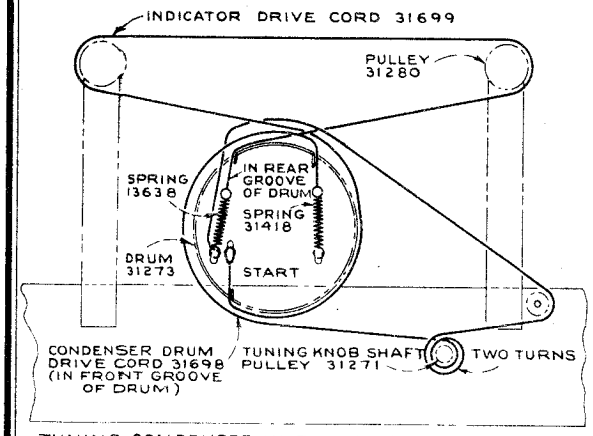

TUNING CONDENSER IN FULL MESH POSITION

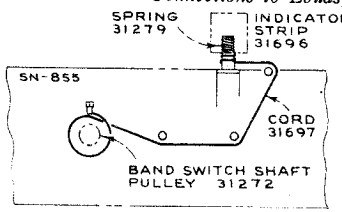

BAND INDICATOR DRIVE CORD

Details of Tuning Mechanism Models HF-8, U-132, U-134

Note: Tuning Mechanism of Model HF-6 is similar to this shown, except Indicator drive cord is Stock No. 31281.

The left-hand push-button is a Victrola-Attachment switch. The right-hand push-button is for dial tuning.

1. Make a list of the desired eight stations, arranged in order from low to high frequencies.
2. Turn range selector to "A" band, turn power on, and allow a few minutes for warming up.
3. Turn Fidelity Control maximum counter-clockwise.
4. Press down the "dial-tuning" (right hand) button.
5. Manually tune in the first station on the list, using the "Magic Eye" for accurate tuning.
6. Hold down the "dial-tuning" button, and press down station button No. 1 (second from left). Both buttons will stay down, central dial lamp will light brightly or dully, depending on which side of disc, the contact is. Move station-setting contact No. 1 to the insulating line on the disc at rear of gang. When the contact is correctly centered on the insulating line, the central dial lamp will go out.
7. Press down any other button in order to release the dial-tuning button and station button No. 1. Then press down station button No. 1 again. The electric tuning mechanism will function to tune in the station, and the central dial lamp will stay on.
8. Repeat this process for the remaining stations.

©John F. Rider, Publisher

Purpose and Function of Positions of Fidelity Control

Position	Reception of—	I-F Channel*	Audio Channel	A. F. C.	"Electric Tuning"
No. 1	Distant Stations	Sharp (5)	Min. Highs	Off	Off
No. 2	Distant Stations	Med. Sharp (6)	Max. Highs	Off	Off
No. 3	Local and medium distant stations	Sharp (5)	Min. Highs	On	On
No. 4	Same as above	Sharp (5)	Max. Highs	On	On
N 5	Local Stations	Med. Sharp (6)	Max. Highs	On	On
No. 6	Local Stations	Med. Broad (7)	Max. Highs	On	On
No. 7 Extreme Clockwise	Local Stations	Broad (8)	Max. Highs	On	On

* Numbers in this column refer to curves shown

ALIGNMENT PROCEDURE

Alignment using the Cathode Ray Oscillograph is much the preferable method because of the variable selectivity features of these instruments. The curves shown below, illustrate the general shape of the i-f selectivity curves for different settings of the Fidelity control, when i-f channel is properly aligned. Connections for the oscillograph are shown in the top view of the receiver chassis. Use short, unshielded leads to oscillograph, and well-shielded leads from test oscillator. If possible, use 30 or 40 kc sweep frequency for i-f alignment.

Output Meter Alignment.—If this method is used, connect meter across voice coil, and turn receiver volume control to maximum. Disregard steps 4 and 7 of alignment table given below. However, a listening check should be made to check operation of Fidelity control, after receiver has been aligned.

Test Oscillator.—For all alignment operations connect the "Gnd" side of test oscillator to chassis, the high side as indicated in table, and keep output as low as possible to avoid a-v-c action.

Calibration Scale on Indicator-Drive-Cord Drum.—The tuning dial is fastened in the cabinet and cannot be used for reference during alignment, therefore a calibration scale is attached to the rear of the indicator-drive-cord drum which is mounted on the front shaft of the gang condenser. The setting of the gang condenser is read on this scale, which is calibrated in degrees. The correct setting of the gang in degrees, for each alignment frequency, is given in the alignment table.

As the first step in r-f alignment, check the position of the drum. The "0" mark on the drum scale must be vertical, and directly over the center of the gang-condenser shaft when the plates are fully meshed. The drum is held to the shaft by means of two set screws, which must be tightened securely when the drum is in the correct position.

To determine the corresponding frequency for any setting of the calibration scales, refer to the accompanying drawing which shows the dial with 0-180° calibration scales drawn at top and bottom.

Pointer for Calibration Scale.—Improvise a pointer for the calibration scale by f tening a piece of wire to the gang-condenser frame, and bend the wire so that it points to the "0" mark on the calibration scale when the plates are fully meshed.

Dial-Indicator Adjustment.—After fastening the chassis in the cabinet, attach the dial indicator to the drive cable with indicator at the 530 kc mark, and gang condenser fully meshed. The indicator has a spring clip for attachment to the cable.

Spread-Band Alignment.—The most satisfactory method of aligning or checking the spread-band ranges is on actual reception of short-wave stations of known frequency, by adjusting the magnetite-core oscillator coil for each band so that these stations come in at the correct points on the dial.

In exceptional cases, when the set is being serviced in a location where the noise level is high enough to prevent reception of short-wave stations, a test-oscillator may be used for alignment, but an extremely high degree of accuracy is required in the frequency settings of the test-oscillator, as a slight error will produce considerable inaccuracy on the spread-band dials. The frequency settings of the test-oscillator may be checked by one or both of the following methods:

1. Determine the exact dial settings of the test-oscillator (for frequencies at or close to the specified alignment frequencies) by zero-beating the test-oscillator against short-wave stations of known frequency.
2. Use harmonics of the standard-broadcast range of a test-oscillator, first checking the frequency settings on this range by means of a crystal calibrator (RCA Stock No. 9572), or by zero-beating against standard broadcast stations.

When a test oscillator is employed for spread-band alignment, a final check should be made on actual reception of short-wave stations of known frequency, and the magnetite-core oscillator coil for each band should be re-adjusted so that the stations come in at the correct points on the dial.

For additional information, refer to booklet "RCA Victor Receiver Alignment."

Using RCA Stock No. 150 Test Oscillator.—When using this oscillator for spread-band alignment, insert an open-circuit plug in the "EXT. MOD." jack, and set the test-oscillator dial 800 kc lower than the desired frequency for the four lower frequency ranges, and 800 kc higher than the desired frequency for the two high ranges. This provides an unmodulated signal of the desired frequency and the magic eye may be used as an output indicator for this unmodulated signal.

Precautionary Lead Dress

1. C-31, C-32, C-33, C-35, C-36, C-40 should be connected with as short leads as possible.
2. "Osc. Control" grid lead should be dressed away from the high side of "A" Band Oscillator trimmer.
3. The lead from "A" Band R-F Coil to the R-F Tube should be dressed away from chassis and shield.
4. Lead from "A" to "C" Band Antenna Coils should be dressed away from the shield.
5. The antenna leads inside the chassis should go directly to the terminals to which they connect.
6. The lead from the rectifier tube to the first filter capacitor should be dressed away from the Victrola connection.
7. The leads to the push-button switches should be dressed away from the Victrola switch, and its associated parts.
8. The output transformer primary leads should be dressed down to the chassis.
9. The 2nd Detector Diode lead should be dressed away from the lead to the discriminator diode. This latter lead should be dressed down to the chassis.

Additional Critical Leads—Models HF-6, U-132

10. Dress Pilot Light leads away from 6R7 grid cap.

Additional Critical Leads—Models U-132, U-134

11. R-103 and R-102 should be dressed away from each other.

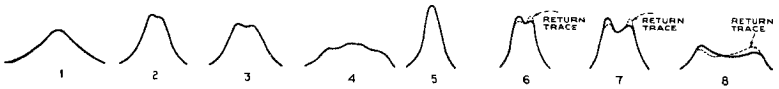

I-F Selectivity Curves

Alignment Table

Step	Connect High Side of Test Oscillator to—	Tune Test Oscillator to—	Range Selector	Set Tuning Gang to—	Adjust following for maximum peak output	Check for Selectivity Curve No.
1	Turn fidelity switch to maximum counter-clockwise (No. 1) position.					
2	6K7 2nd I-F Grid Cap in series with .01 mfd.	455 KC	"A"	Quiet Point Between 550 and 750 KC	L21 3rd I-F Trans. L31-L32 4th I-F Trans.	1
3	6K7 1st I-F Grid Cap in series with .01 mfd.	455 KC	"A"		L18, L19 2nd I-F Trans.	2
4	6K7 1st I-F Grid Cap in series with .01 mfd.	455 KC	"A"		Turn Fidelity Control Clockwise to No. 6 position	3
					Turn Fidelity Control Clockwise to No. 7 position	4
5	Turn Fidelity Control to maximum counter-clockwise (No. 1) position.					
6	6L7 1st Det. Grid in series with 300 ohms *Remove Grid Lead*	455 KC	"A"	Quiet Point Between 550 and 750 KC	L15, L16, 1st I-F Trans.	5
7	6L7 1st Det. Grid in series with 300 ohms	455 KC	"A"		Turn Fidelity Control Clockwise to No. 5 position	6
					Turn Fidelity Switch Clockwise to position No. 6	7
					Turn Fidelity Switch Clockwise to position No. 7	8
8	Turn Fidelity Control to maximum counter-clockwise (No. 1) position.					
9	A2 in series with 100 mmf, A1 to Gnd.	600 KC	"A"	600 KC 29°	L30, osc.	
10	A2 in series with 100 mmf, A1 to Gnd.	1,500 KC	"A"	1,500 KC 152.5°	C30, osc.; C5, ant.; C9, det.	
11	A2 in series with 100 mmf, A1 to Gnd.	455 KC	"A"	600 KC 29°	L14, wave trap *Minimum output*	
12	A2 in series with 100 mmf, A1 to Gnd.	6,100 KC	"B"	6,100 KC 147°	C42, osc.; C2, ant.	
13	A2 in series with 100 mmf, A1 to Gnd.	2,440 KC	"B"	2,440 KC 15°	L27, osc.	
14	A2 in series with 100 mmf, A1 to Gnd.	6,100 KC	"B"	6,100 KC 147°	C42	
15	A2 in series with 47 ohms, A3 to Gnd.	20,000 KC	"C"	20,000 KC 156°	C27, osc.; C1, ant.	
16	A2 in series with 47 ohms, A3 to Gnd.	9,600 KC	"C"	9,600 KC 57°	L28, osc.	
17	A2 in series with 47 ohms, A3 to Gnd.	20,000 KC	"C"	20,000 KC 156°	C27, osc.	
18	A2 in series with 47 ohms, A3 to Gnd.	9,600 KC	"31M"	9,600 KC 99°	L26, osc.; C7, ant.; C13, det.	
19*	A2 in series with 47 ohms, A3 to Gnd.	6,100 KC	"49M"	6,100 KC 103°	C41, osc.	
20	A2 in series with 47 ohms, A3 to Gnd.	11,800 KC	"25M"	11,800 KC 90°	L25, osc.	
21	A2 in series with 47 ohms, A3 to Gnd.	15,200 KC	"19M"	15,200 KC 79°	L24, osc.	
22	Proceed to A.F.C. discriminator adjustments.					

*NOTE: In Step 19 only, oscillator tracks on low side of signal; use maximum inductance peak (plunger in) if two peaks can be obtained. All other oscillator trimmers use minimum, inductance or capacity peak (plunger out), if two peaks can be obtained.

A. F. C. Alignment.—After receiver has been fully aligned, turn Fidelity control to No. 1 position, tune in a station of medium signal strength in the neighborhood of 550-650 kc, or, if it is necessary to use a local station for this signal, cut down length of antenna so that signal is about medium strength. Carefully tune in the station using the "Magic Eye" as an indicator. Tune test oscillator to 455 kc, turn output to maximum, and "Modulation" off. Connect "Gnd" side of test oscillator to chassis, and bring the lead from the high side of test oscillator near the grid lead of 1st detector, 6L7 tube, until a beat note can be heard in the loudspeaker. Do not bring lead any closer than 1 inch to grid lead of 6L7, or detuning of circuit will result, and the adjustment will not be accurate.

Adjust frequency of test oscillator till beat-note heard in loudspeaker is at zero-beat. Turn Fidelity control to No. 3 position, and a beat note will again be heard. Adjust trimmer, L32, bottom of 4th i-f transformer, till beat note heard is again at zero-beat. Turn Fidelity control to No. 1 position, and check for zero-beat. When properly adjusted turning Fidelity control from No. 1 to No. 3 position should not affect zero-beat.

With Fidelity control in No. 1 position, tune receiver off resonance. Turn Fidelity control to No. 3 position—station should "fall" into resonance due to A. F. C. action. Push in Tuning Control Shaft without turning it—station should again be off resonance as originally tuned.

©John F. Rider, Publisher

RCA MFG. CO., INC.

MODELS HF-6, U132
HF-8, U134

Parts List

STOCK No.	DESCRIPTION	Unit List Price
	RECEIVER ASSEMBLIES	
31492	Bearing—Variable condenser motor rotor adjustment bearing—less bracket and cup assembly —Models U-132 and U-134 only	.10
31253	Board—Antenna-ground terminal board—Models HF-8 and HF-8 only	.25
31752	Board—Antenna-ground terminal board—Models U-132 and U-134 only	.25
31276	Bracket—Band indicator mounting bracket—less band indicating strip, cord, and tension spring	.40
31491	Bracket—Bracket and bearing cup for variable condenser motor rotor adjustment — Models U-132 and U-134 only	.45
31382	Bracket—"Magic Eye" bracket and clip	.22
31712	Cable—3-conductor shielded fidelity switch cable	.85
31711	Cable—4-conductor shielded fidelity switch cable	.90
31710	Cable—Low capacity phono. cable	1.35
31715	Cable—Push-button switch-to-selector contacts cable	1.45
30766	Cap—Shield cap for "Magic Eye"	.15
12607	Cap—Top shield cap for first, second, or fourth i-f transformer	.20
12807	Capacitor—Adjustable trimmer, 2-8 mmfd. (C27, C30)	.45
12884	Capacitor—Adjustable trimmer, 2-20 mmfd. (C7, C13, C41, C42)	.60
31292	Capacitor—Dual adjustable trimmer, 3-30 mmfd. each section (C1, C2)	.40
14392	Capacitor—4.7 mmfd. (C68)	.35
31252	Capacitor—Adjustable trimmer, 5-80 mmfd. (C3)	.25
13001	Capacitor—8.2 mmfd. (C14)	.35
31709	Capacitor—10 mmfd. (C35)	.40
12896	Capacitor—15 mmfd. (C45)	.35
31707	Capacitor—25 mmfd. (C31)	.70
13141	Capacitor—47 mmfd. (C70)	.35
12723	Capacitor—56 mmfd. (C17)	.35
31705	Capacitor—82 mmfd. (C53)	.30
12813	Capacitor—82 mmfd. (C104) — Models U-132 and U-134 only	.35
31270	Capacitor—100 mmfd. (C25, C49)	.35
12720	Capacitor—100 mmfd. (C15)	.35
31706	Capacitor—120 mmfd. (C40)	.25
12724	Capacitor—120 mmfd. (C12, C34)	.35
31757	Capacitor—120 mmfd. (C24, C48, C50)	.35
31708	Capacitor—155 mmfd. (C32)	.30
13003	Capacitor—180 mmfd. (C6, C10, C16)	.35
12952	Capacitor—330 mmfd. (C59, C60)	.35
31756	Capacitor—330 mmfd. (C18, C19, C20, C21)	.35
30423	Capacitor—470 mmfd. (C26)	.35
31702	Capacitor—560 mmfd. (C38)	.50
31703	Capacitor—2,500 mmfd. (C37)	.50
31704	Capacitor—3,000 mmfd. (C43)	.60
5107	Capacitor—.0025 mfd. (C63, C105)—C105 in Models U-132 and U-134 only	.20
30303	Capacitor—.0035 mfd. (C100)—Models U-132 and U-134 only	.40
4838	Capacitor—.005 mfd. (C52, C56)	.25
14393	Capacitor—.01 mfd. (C32, C55, C67, C74, C101)—C101 in Models U-132 and U-134 only	.30
11315	Capacitor—.015 mfd. (C53, C54, C69)	.20
30038	Capacitor—.025 mfd. (C59, C73, C102)—C102 in Models U-132 and U-134 only	.20
4886	Capacitor—.05 mfd. (C29)	.20
30882	Capacitor—.05 mfd. (C44, C70)	.20
4839	Capacitor—0.1 mfd. (C28, C46, C11, C47)	.30
30899	Capacitor—0.1 mfd. (C71)	.30
30965	Capacitor—0.25 mfd. (C56, C72, C23, C57, C80)—C80 used in Models HF-6 and U-132 only	.30
31701	Capacitor—0.5 mfd. (C51, C81)	.35
11203	Capacitor—10 mfd. (C75, C76)—Models HF-8 and U-134 only	1.15
14377	Capacitor—16 mfd. (C77)	.95
5212	Capacitor—16 mfd. (C78)—Models HF-6 and HF-8 only	1.35
31751	Capacitor—16 mfd. (C78)—Models U-132 and U-134 only	1.10
14531	Capacitor—25 mfd. (C75)—Model HF-6 only	1.55
31753	Capacitor—25 mfd. (C75)—Model U-132 only	1.35
31544	Clutch—Variable condenser drive gear clutch and pinion gear—for 25-cycle models only	.45
31237	Clutch—Variable condenser drive gear clutch and pinion gear—for 50/60-cycle models only	.35
31669	Coil—"A" band antenna coil (L7, L8)	.95
31689	Coil—"A" band oscillator coil (L29, L30)	.55
31672	Coil—"A" band r-f coil (L12, L13)	1.25
31670	Coil—"B" band antenna coil (L5, L6)	.70
31690	Coil—"B" and 49-meter band oscillator coil (L27)	.50
14952	Coil—"B" band r-f coil (L11)	.86
31671	Coil—"C" band antenna coil (L3, L4)	.70
12486	Resistor—560,000 ohms, ½ watt (R18, R30)	.20
30963	Resistor—820,000 ohms, ½ watt (R100)—Model U-132 only	.20
12013	Resistor—1 meg., 1/10 watt (R32)	.15
13730	Resistor—1 meg., ½ watt (R1, R2, R5, R13, R29, R44)	.20
5028	Resistor—1.8 meg., ½ watt (R103)—Model U-134 only	.20
12201	Resistor—1.5 meg., ½ watt (R100)—Model U-134 only	.20
30208	Resistor—1.2 meg., ½ watt (R101, R102)—Models U-132 and U-134 only	.20
12879	Resistor—2.2 meg., ½ watt (R20, R24, R103)—R103 in Model U-132 only	.20
14887	Retainer—Pointer drive cord pully retainer	.01
31233	Rotor—Selector rotor disc — mounts on rear of variable condenser shaft	1.16
31241	Screw—4-20 x 3/16-in. headless, cone point set screw for flywheel	.02
14350	Screw—No. 8-32 square head set screw for rotor, Stock No. 31233	.03
5042	Screw—No. 8-32 x ¼-in. headless set screw for pulley, Stock No. 31271	.03
4669	Screw—No. 8-32 x ¼-in. square head set screw for pulley, Stock No. 31272, and drum, Stock No. 31273	.03
4119	Screw—No. 8-32 x ¼-in. headless set screw for gear, Stock No. 31239	.02
31681	Shaft—Variable condenser drive knob shaft	.20
31364	Socket—Dial lamp socket—Models HF-6 and HF-8 only	.20
31255	Coil—"C" or 31-meter band oscillator coil (L26, L28)	.40
14953	Coil—"C" band r-f coil (L10)	.70
12819	Coil—Choke coil (L35)	.55
31888	Coil—19-meter band oscillator coil (L23, L24)	.45
31254	Coil—25-meter band oscillator coil (L25)	.40
31673	Coil—49-, 31-, 25-, and 19-meter bands antenna coil (L1, L2)	1.35
14954	Coil—49-, 31-, 25-, and 19-meter bands r-f coil (L9)	1.30
31676	Condenser—3-gang variable (C4, C5, C8, C9, C39)	7.05
31231	Contact—Contact tip for selector plunger	.08
31345	Contact—Push-button switch contacts, comprising 10-contacts riveted on insulating strip	.70
31344	Contact—Push-button switch contacts, comprising 13-contacts riveted on insulating strip	1.20
31697	Cord—Band indicator drive cord	.20
31281	Cord—Pointer drive cord—Model HF-8 only	.50
31699	Cord—Pointer drive cord—Models HF-8, U-132 and U-134 only	.55
31698	Cord—Variable condenser drive cord	.20
31273	Drum—Variable condenser drive cord drum	.80
31688	Filter—10-kc filter (L33, L34, C61, C62, C64, C65)	3.50
31240	Flywheel—Variable condenser drive motor flywheel	.25
31239	Gear—Variable condenser knob shaft drive gear and hub	.65
31545	Gear—Variable condenser intermediate drive gear and pinion gear — for 25-cycle models only	.40
31238	Gear—Variable condenser intermediate drive gear and pinion gear—for 50/60-cycle models only	.50
31696	Indicator—Band indicator strip	.15
31480	Lamp—Electric Tuning adjustment indicator lamp	.20
11891	Lamp—Dial lamp	.17
31243	Leather—Friction leather for flywheel	.04
31346	Lock Plate — Push-button switch lock plate, comprising 10-contact locks in one strip	.80
31246	Motor—Variable condenser drive motor—for 25-cycle models only (M1)	6.60
31235	Motor—Variable condenser drive motor — for 50/60-cycle models only (M1)	4.85
12471	Plate—Mounting plate and rubber for cushion socket—less socket	.15
31227	Plate—Selector mounting plate and spacers—mounts on rear of variable condenser	.50
31228	Plate—Selector contact plate—less plungers	.45
31229	Plunger—Selector plunger—less contact tip and tip spring	.18
30868	Plug—2-contact female plug for motor power cable—Models U-132 and U-134 only	.35
5040	Plug—4-contact female plug for speaker cable	.30
14697	Pulley—Variable condenser drive cord intermediate pulley	.35
31280	Pulley—Indicator pointer drive cord pulley	.10
31272	Pulley—Range switch shaft pulley	.20
31271	Pulley—Station selector knob shaft pulley	.25
31693	Resistor—Voltage divider, comprising one 82-ohm, one 18-ohm, one 3,300-ohm, one 2,700-ohm, one 1,100-ohm sections (R39, R40, R41, R42, R43)—Models HF-8 and U-134 only	.90
31694	Resistor—Voltage divider, comprising one 165-ohm, one 25-ohm, one 6,000-ohm, one 4,100-ohm, and one 1,300-ohm sections (R39, R40, R41, R42, R43)—Models HF-6 and U-132 only	.90
13220	Resistor—56 ohms, ½ watt (R45)	.20
14076	Resistor—820 ohms, ½ watt (R12)	.20
14720	Resistor—1,000 ohms, ½ watt (R7, R8, R14, R15)	.20
12194	Resistor—1,800 ohms, ½ watt (R4)	.20
14559	Resistor—10,000 ohms, ½ watt (R16)	.20
12695	Resistor—15,000 ohms, ½ watt (R21)	.20
13998	Resistor—22,000 ohms, ½ watt (R6)	.20
30492	Resistor—22,000 ohms, ½ watt (R11, R26)	.20
12738	Resistor—27,000 ohms, ½ watt (R22)	.20
12454	Resistor—33,000 ohms, ½ watt (R10, R27)	.20
12412	Resistor—47,000 ohms, ½ watt (R28)	.20
12286	Resistor—56,000 ohms, ½ watt (R9)	.20
13715	Resistor—68,000 ohms, ½ watt (R3)	.20
14560	Resistor—100,000 ohms, ½ watt (R17, R34, R36, R38, R48)—R48 used in Models HF-8 and U-132 only	.20
13698	Resistor—180,000 ohms, ½ watt (R33)	.20
12199	Resistor—270,000 ohms, ½ watt (R25, R35, R37, R47)	.20
13479	Resistor—330,000 ohms, ½ watt (R19)	.20
12285	Resistor—470,000 ohms, ½ watt (R31)	.20
31365	Socket—Electric Tuning adjustment indicator lamp socket	.30
13871	Socket—"Magic Eye" socket	.45
14278	Socket—Phono. input socket	.25
31251	Socket—Tube socket	.25
31232	Spring—Contact tip spring for selector plunger	.01
13636	Spring—Pointer drive cord tension spring	.08
31230	Spring—Selector plunger body spring	.01
31279	Spring—Tension spring for band indicator	.03
31313	Spring—Tension spring for push-button switch latch bar	.06
31242	Spring—Tension spring for flywheel	.01
31418	Spring—Variable condenser drive cord tension spring	.05
31494	Spring—Variable condenser motor rotor adjustment bearing spring for 25-cycle models only (12 turns, .190-in. O.D., 43/64-in. lg.)	.02
31493	Spring—Variable condenser motor rotor adjustment bearing spring for 50/60-cycle models only—Models U-132 and U-134 only	.02
31680	Support—Variable condenser drive gear mounting support and studs	.35
31679	Support—Variable condenser motor mounting support and studs—for 25-cycle models only	.70
31678	Support—Variable condenser motor mounting support and studs—for 50/60-cycle models only	.45
31677	Switch—Electric Tuning A.F.C. suppression switch (S7)	.55
31684	Switch—Fidelity switch (S5, S6)	1.20
31683	Switch—L-f tone and power switch (S8, S9)	1.10
31692	Transformer—Power transformer, 105-120 volts, 25-60 cycle (T1)—Models HF-8 and U-132 only	14.70
31675	Transformer—Power transformer, 105-120 volts, 25-60 cycle (T1)—Models HF-8 and U-134 only	15.70
31691	Transformer—Power transformer, 105-120 volts, 50-60 cycle (T1)—Models HF-6 and U-132 only	10.30
31674	Transformer—Power transformer, 105-120 volts, 50-60 cycle (T1)—Models HF-8 and U-134 only	11.30
12654	Trap—Wave trap (L14)	1.55
31682	Volume Control (R23)	1.50
31700	Switch—Manual Tuning A.F.C. and selectivity switch (S12)	.85
31360	Switch—Victrola switch for mounting on push-button switch assembly (S10)—Models HF-6 and HF-8 only	.38
31695	Switch—Push-button switch and bracket complete—Models HF-6 and HF-8 only	4.35
31754	Switch—Push-button switch and bracket complete—Models U-132 and U-134 only	4.60
31755	Switch—Radio-Phono. switch for mounting on push-button switch assembly (S100)—Models U-132 and U-134 only	.45
31668	Switch—Range switch only—less coils (S1, S2, S3, S4)	4.40
31746	Transformer—First i-f transformer (L15, L16, L17, C18, C19)	2.80
31749	Transformer—Second i-f transformer (L18, L19, L20, C20, C21)	2.75
31747	Transformer—Third i-f transformer (L21, L22, C24, C25)	1.95
31748	Transformer—Fourth i-f transformer (L31, L32, C48, C49, C50, R17)	2.75
31687	Transformer—Output transformer (T2)—Models HF-6 and U-132 only	3.20
31685	Transformer—Output transformer (T2)—Models HF-8 and U-134 only	3.20
31685	Transformer—Power transformer, 105-130, 140-160, 200-250 volts, 50-60 cycle (T1)—Models HF-6 and U-132 only	15.10
31884	Transformer—Power transformer, 105-130, 140-160, 200-250 volts, 50-60 cycle (T1)—Models HF-8 and U-134 only	16.05
	MOTOR BOARD ASSEMBLIES Models U-132 and U-134 Only	
31149	Base—Tone arm mounting base	.35
31152	Board—Record changer base complete with all riveted posts and bearings—less all operating parts	7.90
14209	Bumper—Main lever rubber bumper (1)	.08
9848	Cup—Used needle cup, rest, and lid complete	.75
31148	Escutcheon—Index escutcheon	.40
31151	Guide—Pickup lift cable guide (coil spring, 80T 8-in. long) (2)	.10
31150	Mounting—Pickup arm base rubber mounting complete	.45
31155	Spring—Needle cup lid tension spring	.04
	OPERATING MECHANISM Models U-132, U-134	
31134	Bracket—Pickup locating lever mounting bracket (3)	.30
31144	Cam—Cam and gear assembly (4)	2.80
6808	Clutch—Trip lever friction clutch assembly (5)	.35
31146	Coupling—Motor coupling complete with turntable drive gear, rubber rings, motor coupling, and drive arm (6)	1.80
31129	Cover—Cap for top of record post	.45
31116	Finger—Trip lever friction finger assembly (7)	.45
31119	Gear—Long arm and rack gear for front left-hand record post (8)	.60
31120	Gear—Short arm and rack gear for rear right-hand record post (9)	.55
31121	Gear—Record post gear (10)	.90
31123	Guide—Main lever spring guide (11)	.40
31114	Lever—Index lever assembly (12)	.75
31127	Lever—Index lever tension spring lever (13)	.30
31138	Lever—Locating lever and pawl assembly (14)	.70
31113	Lever—Main lever assembly (15)	1.35
31140	Lever—Pickup lift cable lever and spring assembly (16)	.55
31135	Lever—Pickup locating lever assembly (17)	.85
31130	Lever—Record separator elevating lever complete with adjustment screws (18)	.80
31132	Lever—Trip detaining lever (19)	.30
31115	Lever—Trip lever assembly (20)	1.85
31131	Lever—Trip regulator lever (21)	.25
31133	Pawl—Trip pawl assembly (22)	.80
31124	Pin—Record post drive pin (23)	.04
14207	Roller—Pickup lift cable roller and bracket assembly (24)	.55
31118	Screw—Set pointed set screw for trip lever hub or record post shelf	.08
4563	Screw—Pickup lift cable screw and nuts	.04
14195	Screw—Set screw for flexible coupling	.05
31117	Screw—Special screw to adjust friction clutch tension	.03
31126	Separator—Record separator knife (25)	.75
31122	Shaft—Record separator post shaft (26)	.40
31125	Shelf—Record post shelf assembly (27)	1.25
31141	Spindle—Turntable spindle shaft and spring	1.40
3678	Spring—Cam pawl tension spring on main gear (12 turns, .190-in. O.D., 43/64-in. lg.)	.04
14190	Spring—Pickup locating lever short spring or locating lever pawl tension spring (28) (16 turns, .180-in. O.D., 19/32-in. lg.)	.08
31145	Spring—Main lever tension spring (29) (18 turns, 9/16-in. O.D., 3-in. lg.)	.05
31136	Spring—Pickup locating lever long spring or index lever tension spring (30) (25 turns, .190-in. O.D., 15/16-in. lg.)	.05
3666	Spring—Pickup lift cable tension spring (31) (20 turns, .195-in. O.D., 1-in. lg.)	.04
31127	Spring—Record separator pressure spring (32) (8 turns, ¼-in. O.D., ¼-in. lg.)	.02
31139	Turntable Assembly—less spindle	3.35
31128	Washer—"C" washer for top of record post	.04
31143	Washers—Turntable thrust washers (1 steel, 1 bronze, 1 felt)	.15
	MOTOR ASSEMBLIES Models U-132 and U-134 Only	
11703	Governor—Motor speed governor	3.05
31448	Motor—105-125 volts, 25 cycle (M2)	23.70
31163	Motor—105-125 volts, 50-60 cycle (M2)	20.50
31167	Motor—105-125 volts, 60 cycle (M2)	17.75
30870	Plug—2-contact male plug for motor power cable	.35
31447	Screw—Complete set of motor mounting screws, washers, and spacers—for 25-cycle models only	.40
31158	Screw—Complete set of motor mounting screws, washers, and spacers — for 50- or 60-cycle models only	.25
14206	Switch—Motor toggle switch (S102)	.90
	PICKUP AND ARM ASSEMBLIES Models U-132 and U-134 Only	
31162	Cable—Pickup arm lift cable clips	.15
31156	Crystal—Pickup crystal cartridge and needle screw	4.25
31159	Pickup and arm complete	7.45
31160	Screw—Pickup needle screw	.12
31161	Shaft—Pickup pivot arm and shaft assembly	.45
	SPEAKER ASSEMBLIES Speaker RL76B-1	
14604	Coil—Hum neutralizing coil (L37)	.40
31723	Coil—Speaker field coil (L36)	4.20
31721	Cone—Speaker cone and voice coil (L38)	2.10
5039	Plug—4-contact male plug for speaker	.30
14358	Screw—Cap screw and washer to Hold core	.04
31718	Speaker complete	14.70
	MISCELLANEOUS ASSEMBLIES	
31358	Button—Station selector push-button	.15
13103	Cap—Pilot lamp cap (bullseye)—Models U-132 and U-134 only	.15
31286	Carriage—Indicator pointer carriage and clip—Model HF-6 only	.22
31456	Cover—Eight protective covers for push-button markers	.08
31540	Cushion—Chassis mounting cushion and screw assembly sufficient for one chassis—Models U-132 and U-134 only	.50
31541	Cushion—Motor plate mounting cushion and clamp assembly sufficient for one instrument—Models U-132 and U-134 only	.50
31716	Dial—Station selector dial scale and crystal—Model HF-6 only	1.65
31719	Dial—Station selector dial scale and crystal—Models HF-8, U-132 and U-134 only	1.20
31362	Escutcheon—Station selector dial escutcheon only—less dial, and push-buttons — Model HF-6 only	2.65
31561	Escutcheon—Station selector dial escutcheon only—less dial, and push-buttons — Models HF-8, U-132 and U-134 only	2.60
4585	Hinge—One pair cabinet door hinges (1 top, 1 bottom)—Model HF-8 only	.60
30698	Hinge—Cabinet lid hinge—Models U-132 and U-134 only	.95
31759	Hinge—Cabinet door hinges (1 upper and 1 lower)—Model U-134 only	.50
31564	Holder—Needle card holder — Models U-132 and U-134 only	.50
31717	Indicator—Station selector indicator pointer, carriage, and clip assembly—Models HF-8, U-132 and U-134 only	.40
31714	Indicator—Station selector indicator pointer—Model HF-6 only	.35
31365	Knob—Volume control, tone control, range switch, or fidelity switch knob	.12
31713	Knob—Station selector knob	.20
11891	Lamp—Pilot or compartment lamp — Models U-132 and U-134 only	.17
31458	Marker—"Dial Tuning" push-button marker	.01
31457	Marker—"Victrola" push-button marker	.01
31589	Marker—Station call letter markers (1 set)	.35
11933	Pull—Cabinet door pull—Model HF-8 only	.15
31566	Pull—Cabinet door pull—Model U-134 only	.60
31760	Screen—Compartment lamp screen — Models U-132 and U-134 only	.20
31285	Screen—Dial color screen and light diffuser—Model HF-6 only	.75
31559	Screen—Dial color screen and light diffuser—Models HF-8, U-132 and U-134 only	.65
12993	Screw—No. 8-32 x ¾-in. headless set screw for knob, Stock No. 31713	.02
31287	Shaft—Slide shaft for indicator pointer carriage	.15
31364	Socket—Pilot or compartment lamp socket—Models U-132 and U-134 only	.20
31558	Spring—Indicator carriage bumper spring	.02
14270	Spring—Retaining spring for knob, Stock No. 31559	.05
31478	Support—Cabinet lid support — Models U-132 and U-134 only	2.20
31470	Suspension—Motor board suspension springs, screw, and washer (4 required) — Models U-132 and U-134 only	.10
	ANTENNA ASSEMBLIES	
31426	Counterpoise Line — Additional length 60-ft. long	1.35
12426	Insulator—Strain and counterpoise insulator	.05
9816	Transmission Line — Additional length 60-ft. long	1.50

ALL PRICES ARE SUBJECT TO CHANGE OR WITHDRAWAL WITHOUT NOTICE.

MODEL 9X
Schematic, Socket Voltage, Specs.

RCA MFG. CO., INC.

Lead Dress, Notes Chassis Wiring

Dial Lamp..... Mazda No. 40, 6.3 volts, .15 amps.

POWER SUPPLY RATINGS

A-C Rating..... 105-125 volts, 50-60 cycles, 50 watts
D-C Rating..... 105-125 volts, 50 watts

CAUTION: The chassis is connected to one side of the power supply. Avoid contact of chassis or parts to external ground when servicing.

Reel up the antenna wire, and keep it away from chassis during alignment. Connect the high side of test-oscillator through an 80 mmfd. capacitor to the antenna terminal. Connect low side of oscillator to receiver chassis through a 0.1 mfd. capacitor. Turn gang condenser to minimum (full out), tune oscillator to 1,760 kc, connect an output meter across the voice coil, and turn volume control to maximum.

Adjust the two trimmers (C3 and C6) on side of gang condenser for maximum output, using lowest possible output from test-oscillator.

Pre-setting Dial.—With gang condenser rotor plates turned full in for maximum capacity, loosen dial-drum set-screw, and turn drum so that the top edge of dial (low-frequency end) is approximately 1/16-in. below level of gang frame, and tighten set-screw.

Precautionary Lead Dress

1. Dress detector grid lead close to top of speaker chassis.
2. Dress lead from grid of 6K7 to gang condenser away from detector section of gang, and clear of rotor plates.
3. Dress speaker leads close to, but not touching, cone.
4. Dress pilot lamp leads close to top of chassis, and clear of rotor.

25-Cycle Operation

For 25-cycle operation, connect a 16 mfd., 150-volt dry electrolytic capacitor (Stock No. 31323) in parallel to C13.

POWER OUTPUT (125-volt, 60-cycle supply)

Undistorted..... 1.0 watt
Maximum..... 1.5 watts

LOUDSPEAKER

Type..... 3-inch Electrodynamic
Voice-Coil Impedance..... 3 ohms at 400 cycles

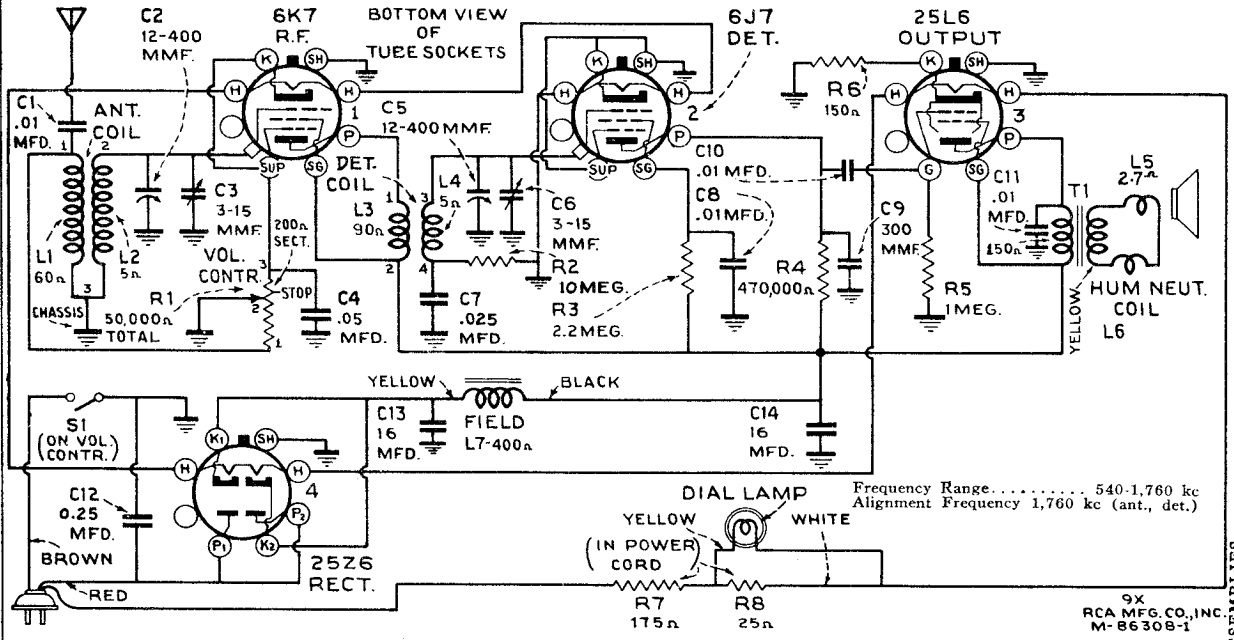

Frequency Range..... 540-1,760 kc
Alignment Frequency 1,760 kc (ant., det.)

9X
RCA MFG. CO., INC.
M-86308-1

SPEAKER ASSEMBLIES

31325 Cone—Speaker cone and voice coil (L6).....
31324 Speaker—Complete .....

MISCELLANEOUS ASSEMBLIES

31326 Escutcheon—Station selector dial escutcheon.
31204 Knob—Station selector, or volume control knob
30900 Spring—Retaining spring for knob, Stock No. 31204 .....

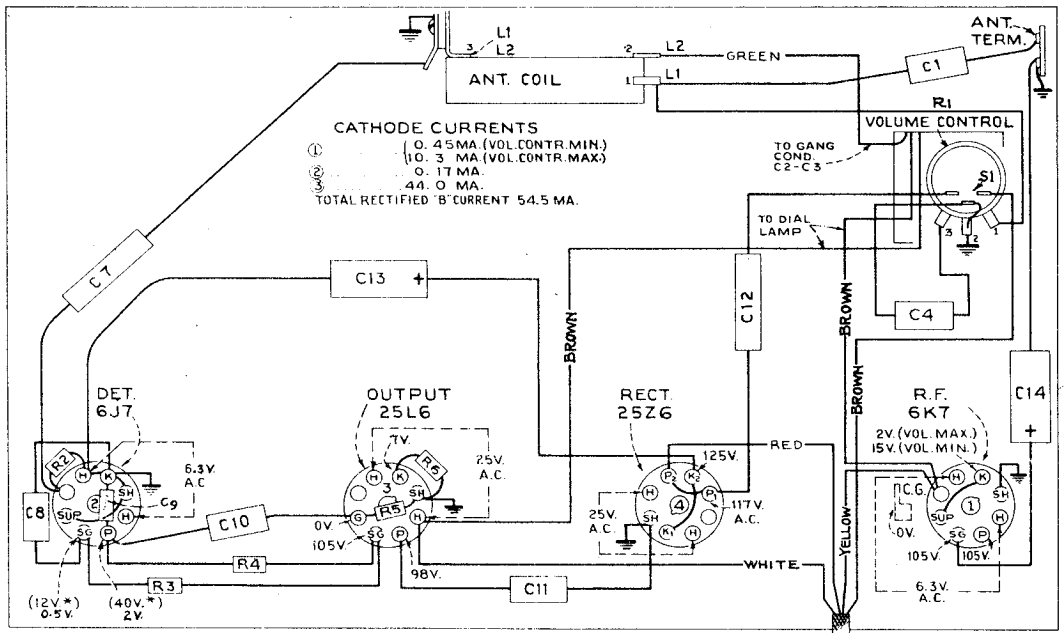

9X
©RCA MFG. CO., INC.
P-84309-0

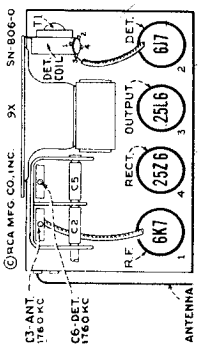

Figure 3—Radiotron Socket Voltages, and Location of Parts

* Note: Values with (*) are operating voltages.
Values not starred are actual measured voltages.

Measurements made to chassis unless otherwise indicated.
Measurements made with set tuned to quiet point, volume control at minimum, using 1,000-ohm-per-volt meter, having ranges of 10, 50, and 250 volts. (Use nearest range above the specified measured voltage.)

Values should hold within approximately ± 20% for 117-volt 60-cycle a-c supply. On d-c, voltages are approximately 10% lower, except heaters, which remain the same.

©John F. Rider, Publisher

RCA MFG. CO., INC.

MODEL 8M
Schematic, Socket Voltage, Trimmers Chassis Wiring

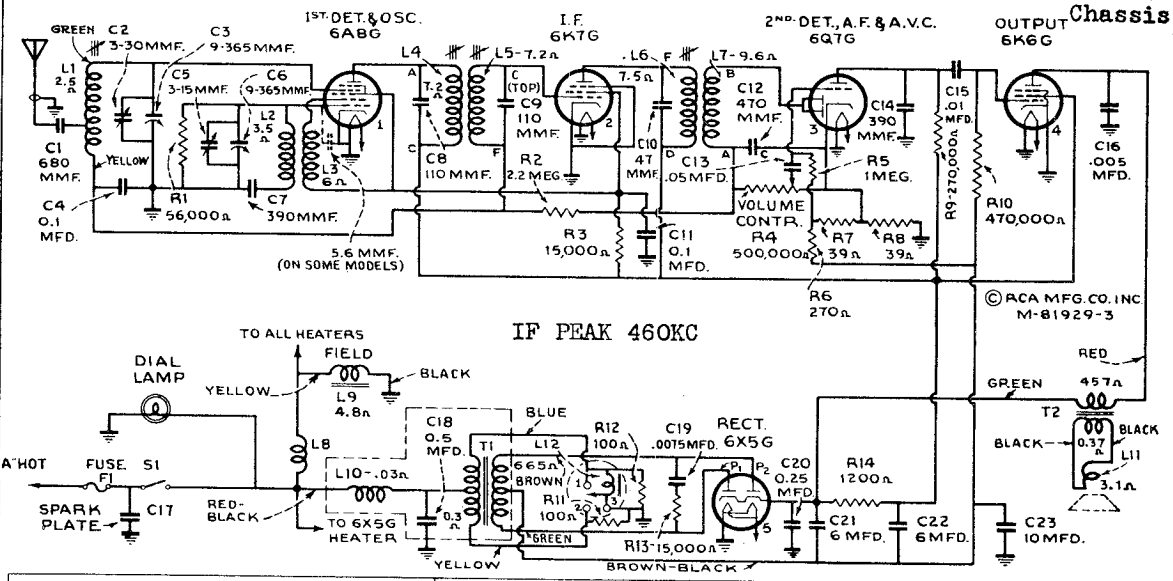

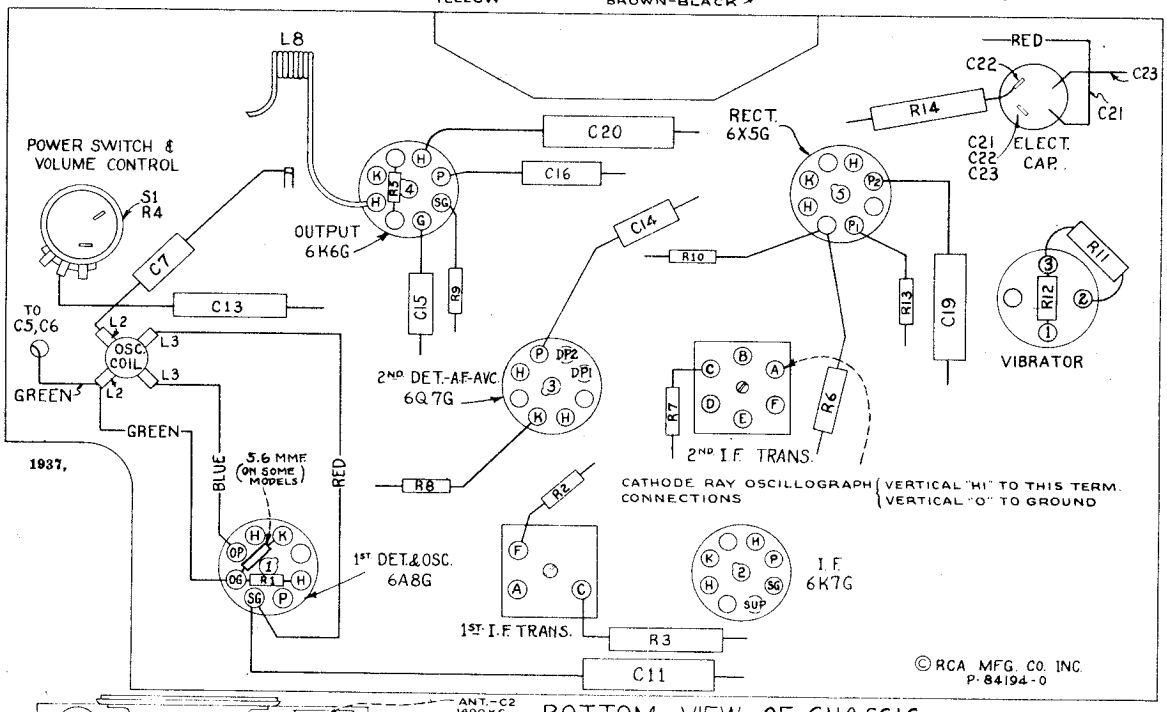

General Description

Model 8M is a five-tube superheterodyne receiver with loudspeaker and radio chassis in the same case. The receiver is designed to be mounted under the dash panel. The operating controls are integral with the radio and speaker case.

Features of design also include magnetite-core adjusted antenna and i-f transformers; automatic volume control; and ignition-noise-suppression filter in the power-input circuit.

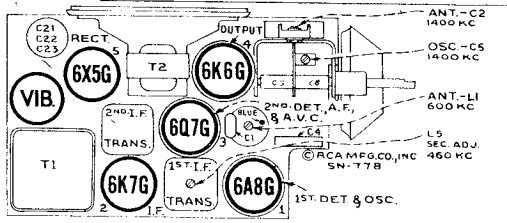

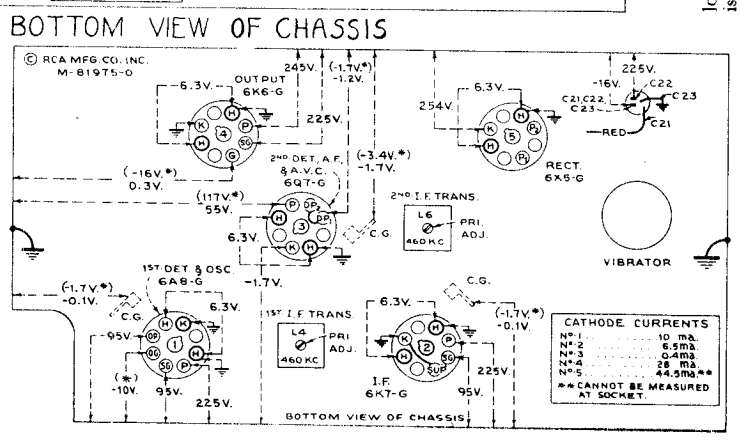

***Note:** Two voltage values are shown for some readings. The value shown in parentheses with asterisk (*) indicates operating conditions without voltmeter loading. The other value (generally lower) is the actual measured voltage and differs from the value shown in parentheses because of the additional loading of the voltmeter.*

Voltage values as specified should hold within ±20% when the receiver is normally operative at its rated line voltage. To duplicate the conditions under which the voltages were measured requires a 1,000-ohm-per-volt d-c meter, having ranges of 10, 50, 250, and 500 volts. Use the nearest range above the specified measured voltage. A-c voltages were measured with a corresponding a-c meter.

Figure 4—Radiotron Socket Voltages and Trimmer Locations
(Measured at 6.3 volts battery supply—Volume control minimum—No signal input)

©John F. Rider, Publisher

MODEL 8M
Alignment, Specs.
Data, Parts

RCA MFG. CO., INC.

Stock No.	DESCRIPTION	List Price
	RECEIVER ASSEMBLIES	
11350	Cap—Grid contact cap—Package of 5	$0.25
30637	Capacitor—Adjustable trimmer (C2)	.30
12405	Capacitor—47 Mmfd. (C10)	.25
14262	Capacitor—110 Mmfd. (C8, C9)	.30
13894	Capacitor—390 Mmfd. (C14)—Package of 5	1.25
30625	Capacitor—390 Mmfd. (C7)	.30
30673	Capacitor—470 Mmfd. (C12)	.25
14498	Capacitor—680 Mmfd. (C1)—Package of 5	1.50
4838	Capacitor—.005 Mfd. (C16)	.25
30626	Capacitor—.0075 Mfd. (C19)	.30
14393	Capacitor—.01 Mfd. (C15)	.30
4886	Capacitor—.05 Mfd. (C13)	.20
4839	Capacitor—0.1 Mfd. (C4, C11)	.30
12484	Capacitor—0.25 Mfd. (C20)	.30
30634	Capacitor Pack—Comprising two 6 Mfd. and one 10 Mfd. sections (C21, C22, C23)	1.50
4358	Clamp—Mounting clamp for capacitor pack, Stock No. 30634	.15
30639	Coil—Antenna coil—less shield (L1)	1.00
30636	Coil—Oscillator coil (L2, L3)	.60
30627	Condenser—2-gang variable tuning condenser (C3, C5, C6)	2.30
30632	Cord—Drive cord—Package of 5	.25
30629	Dial—Dial scale and holder	.70
30630	Drum—Dial drive drum, complete with set screws	.70
12415	Resistor—39 ohms, insulated, ½ watt (R7, R8)—Package of 5	1.00
30540	Resistor—100 ohms, insulated, ½ watt (R11, R12)—Package of 5	1.00
13744	Resistor—270 ohms, carbon type, ½ watt (R6)—Package of 5	1.00
6134	Resistor—1,200 ohms, carbon type, 1 watt (R14)—Package of 5	1.10
12695	Resistor—15,000 ohms, insulated, ½ watt (R13)—Package of 5	1.00
14166	Resistor—15,000 ohms, carbon type, 2 watt (R3)	.25
12286	Resistor—56,000 ohms, insulated, ½ watt (R1)—Package of 5	1.00
12199	Resistor—270,000 ohms, insulated, ½ watt (R9)—Package of 5	1.00
12285	Resistor—470,000 ohms, insulated, ½ watt (R10)—Package of 5	1.00
13730	Resistor—1 Megohm, insulated, ½ watt (R5)—Package of 5	1.00
12679	Resistor—2.2 Megohm, insulated, ½ watt (R2)—Package of 5	1.00
5129	Ring—Retaining ring for Radiotron shield—Package of 5	.15
12418	Screw—No. 8-32 x 3/16-in. slab-head set screw for drum, Stock No. 30630—Package of 10	.25
30638	Shield—Radiotron shield	.25
13686	Socket—4-contact vibrator socket	.20
11196	Socket—8-contact Radiotron socket	.25
30631	Spring—Tension spring for drive cord—Package of 10	.35
14376	Transformer—First I.F. transformer (L4, L5, C8, C9)	2.45
30672	Transformer—Second I.F. transformer (L6, L7, C10, C12)	2.10
30633	Transformer—Vibrator power transformer (T1, L10, C18)	5.00
13688	Vibrator—Plug-in vibrator (L12)	3.35
30628	Volume Control and "ON-OFF" switch (R4, S1)	1.50
	REPRODUCER ASSEMBLIES (84147-2)	
30782	Cone—Reproducer cone and voice coil (L11)	1.20
30781	Reproducer, complete (L9, L11, T2)	4.40
30783	Transformer—Output transformer (T2)	1.45
	MISCELLANEOUS ASSEMBLIES	
5025	Capacitor—Generator capacitor	.45
5023	Fuse—15 amp.—Package of 5	.40
30640	Housing—Receiver case only	3.60
4290	Insulator—Fuse-holder insulating sleeve—Package of 10	.20
30642	Knob—Tuning or volume control knob—Package of 5	.65
11765	Lamp—Dial lamp—Package of 5	1.15
7766	Lead—"A" lead (ammeter end), complete with female section of fuse holder	.40
30641	Lead—"A" lead (chassis end), complete with male section of fuse holder	.30
30643	Lead—Shielded antenna lead (chassis end), complete with female section of connector	.30
30645	Mounting—Complete set of brackets, nuts, washers, and screws for mounting receiver	.45
30644	Socket—Dial lamp socket and lead	.30
5024	Suppressor—Distributor suppressor	.40

ALL PRICES ARE SUBJECT TO CHANGE WITHOUT NOTICE.

Service Data

Loudspeaker.—Centering of the loudspeaker is made in the usual manner with three narrow celluloid or paper feelers after first removing the front dust cover. This may be removed by softening its cement with a light application of acetone, using care not to allow the acetone to flow into the air gap. A dust cover should be cemented in place with ambroid upon completion of adjustment.

Vibrator.—The mechanical vibrator used in the power system has a plug-in base for easy removal from the receiver. Its adjustment has been set during manufacture by means of special equipment. In cases of faulty operation a replacement unit should be installed.

Antenna Compensating Capacitor.—Trimmer C2 is accessible from the bottom of the receiver case (near speaker opening) and should be readjusted to give maximum signal output on a weak station or oscillator signal at approximately 1,400 kc, after the instrument is installed. The antenna should be connected to the receiver during this adjustment. Refer to Alignment Table operation number 6.

Tuning Range	530 to 1,550 kc
POWER OUTPUT RATING	
Maximum	3.3 watts
Undistorted	1.75 watts
POWER SUPPLY RATING	
Supply Voltage	6.3 volts
Current Drain	6 amp.
Fuse Protection	15 amp.
PILOT LAMP	Mazda No. 51, 7.5 volts, 0.2 amp.
ALIGNMENT FREQUENCIES	I.F., 460 kc; Oscillator Coil, 1,400 kc; Antenna Coil, 600 kc and 1,400 kc
LOUDSPEAKER	
Type	5-inch Electrodynamic
Voice-Coil Impedance	3.2 ohms at 400 cycles

Alignment Procedure

Remove all external screws to remove the chassis from the case. Hold the condenser gang in full-mesh position while rotating the dial scale so the low frequency (end) calibration mark is in line with the pointer. Loosen the three nuts in the front of the scale assembly for this adjustment. When referring to scale settings hold the front panel in place.

Perform alignment in proper order tabulated below, starting with No. 1 and following all operations across, then No. 2, etc. Adjustment locations are shown on figures 1 and 4.

Cathode-ray alignment is preferable; the connections to the chassis are shown on figure 3. If an output indicator is used, connect it across the loudspeaker voice-coil and advance the receiver volume control to full-volume position.

Connect the "low" output terminal of the test oscillator to the receiver chassis for all alignment operations. Regulate the output of the test oscillator so that minimum signal is applied to the receiver to obtain an observable output indication. This will avoid a-v-c action.

The term "Ant. Cable" means test oscillator signal should be applied to the receiver at the connector on the antenna cable extending from the receiver chassis. "Dummy antenna" means the device which must be connected between the "high" test-oscillator output and the point of connection to the receiver, in order to obtain ideal alignment. "No signal, 550-750 kc" means that the receiver should be tuned to a point between 550 and 750 kc where no signal is received from a station or the local (heterodyne) oscillator.

For further details on alignment, refer to booklet "RCA Victor Receiver Alignment."

Order of Alignment	Test Oscillator: Connection to Receiver	Test Oscillator: Dummy Antenna	Test Oscillator: Frequency Setting	Receiver Dial Setting	Circuit to Adjust	Adjustment Symbols	Adjust to Obtain
1	6K7-G I-F Grid Cap	.001 Mfd.	460 kc	No Signal 550-750 kc	2nd I-F Trans.	L6	Max. (peak)
2	6A8-G Det. Osc. Grid Cap	.001 Mfd.	460 kc	No Signal 550-750 kc	1st I-F Trans.	L4 and L5	Max. (peak)
3	Ant. Cable	100 Mmfd.	1,400 kc	1,400 kc	Osc.	C5	Max. (peak)
4	Ant. Cable	100 Mmfd.	1,400 kc	1,400 kc	H-F Ant.	C2	Max. (peak)
5	Ant. Cable	100 Mmfd.	600 kc	Approx. 600 kc *	L-F Ant.	L1	Max. (peak)†
6	Ant. Cable	100 Mmfd.	1,400 kc	1,400 kc	H-F Ant.	C2	Max. (peak)

* Adjust dial for maximum output at or near 600 kc setting.
† The same inductance may be obtained for two different settings of L1. Use either setting.

©John F. Rider, Publisher

RCA MFG. CO., INC.

MODEL 8M1
Schematic
MODELS 8M1,8M2
Socket,Trimmers
Voltage

IF PEAK 260 KC

Figure 1—Schematic Circuit Diagram (Model 8M1)

Refer to Figure 3 and Note No. 1 in Replacement Parts list before servicing these receivers.

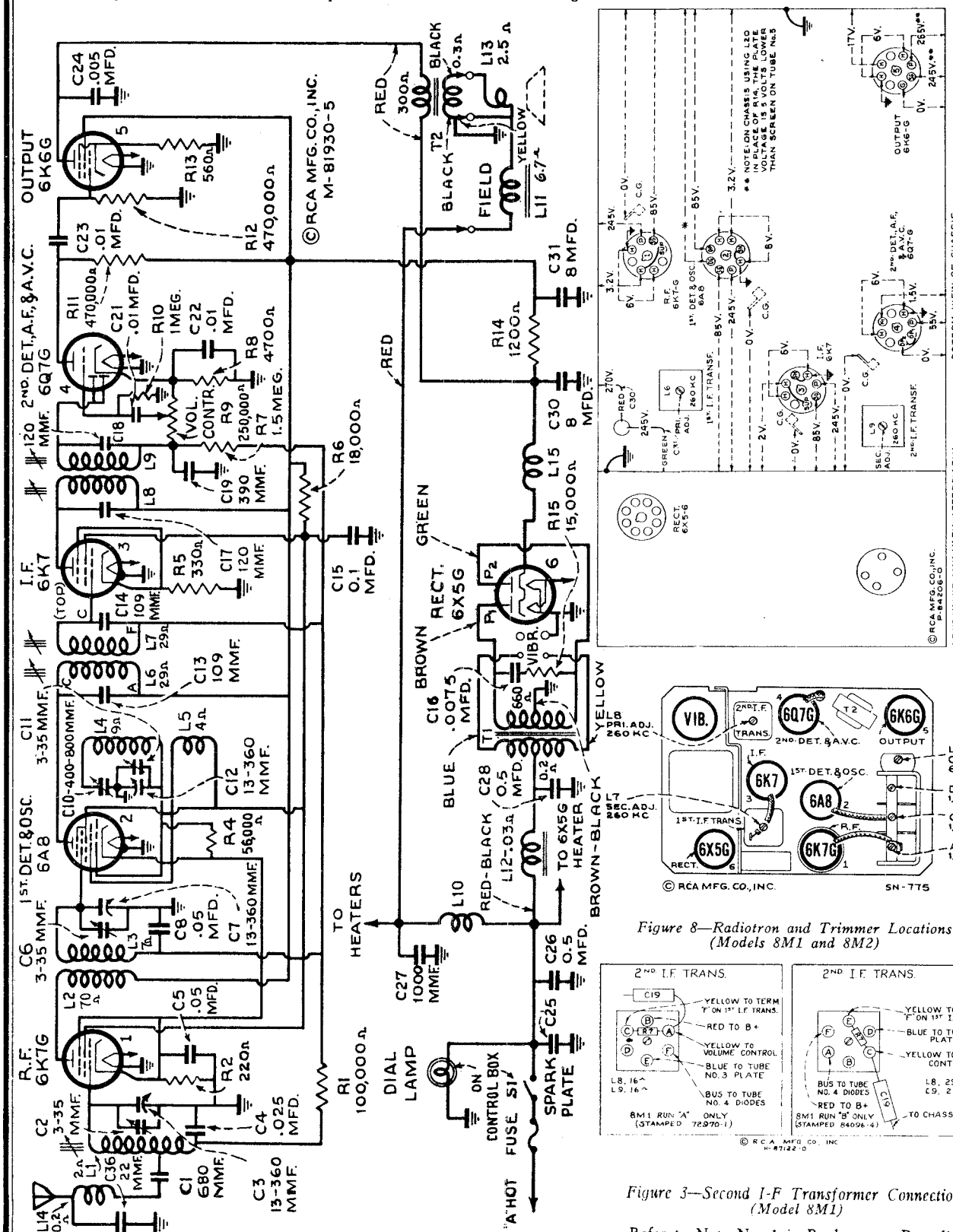

Figure 9—Radiotron Socket Voltages and Trimmer Locations (Models 8M1 and 8M2)
(Measured at 6.3 volts battery supply—Volume control minimum—No signal input)

Figure 8—Radiotron and Trimmer Locations (Models 8M1 and 8M2)

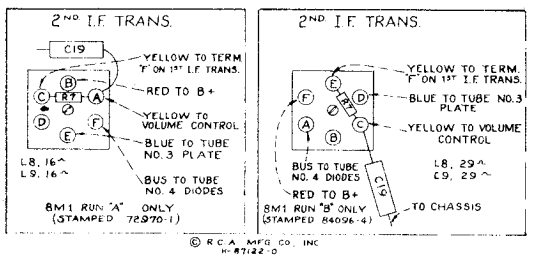

Figure 3—Second I-F Transformer Connections (Model 8M1)

Refer to Note No. 1 in Replacement Parts list.

©John F. Rider, Publisher

MODEL 8M2
Schematic, Changes
Power Unit Changes

RCA MFG. CO., INC.

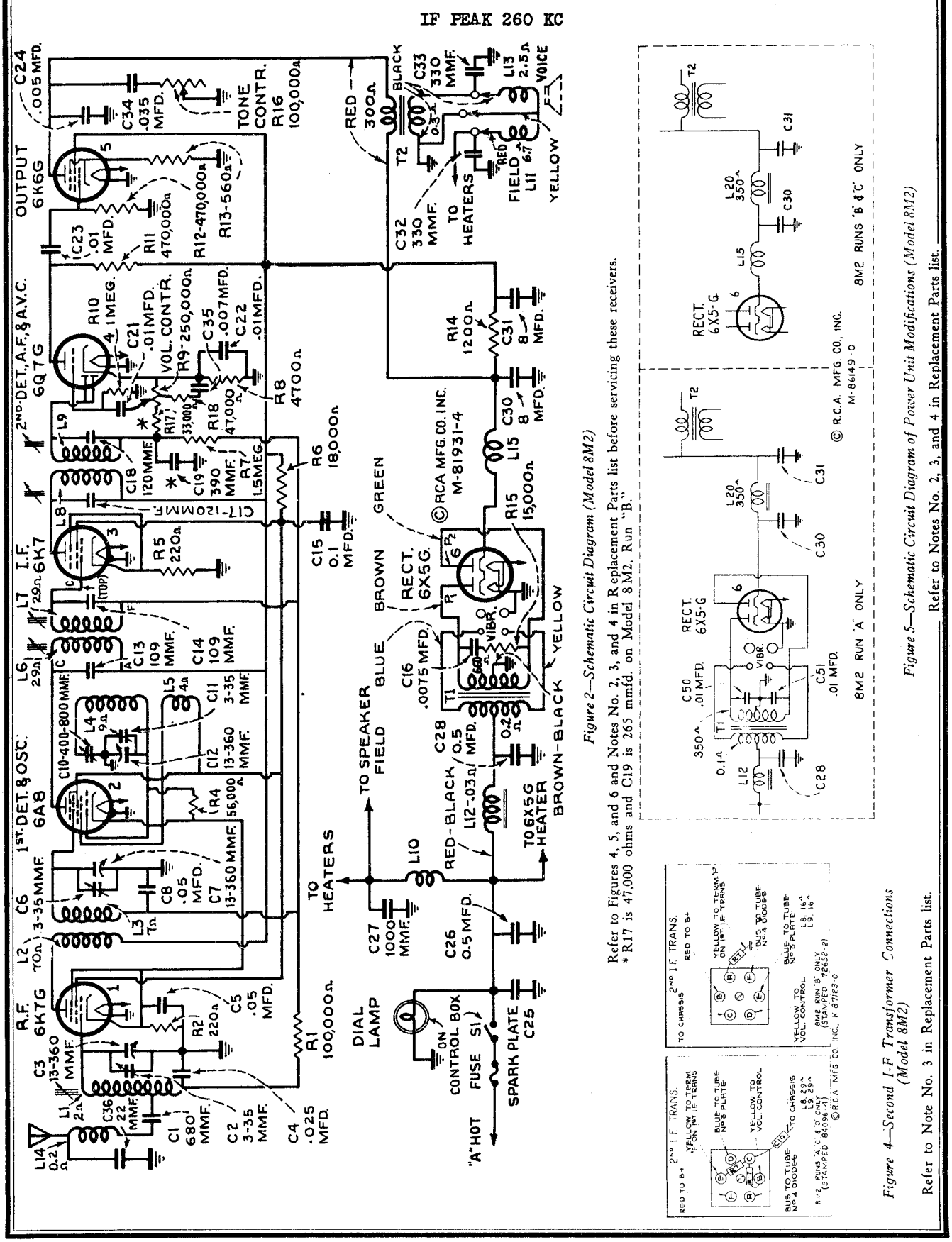

Figure 2—Schematic Circuit Diagram (Model 8M2)

Refer to Figures 4, 5, and 6 and Notes No. 2, 3, and 4 in Replacement Parts list before servicing these receivers.
* R17 is 47,000 ohms and C19 is 265 mmfd. on Model 8 M2, Run "B."

Figure 5—Schematic Circuit Diagram of Power Unit Modifications (Model 8M2)

Refer to Notes No. 2, 3, and 4 in Replacement Parts list.

Figure 4—Second I-F Transformer Connections (Model 8M2)

Refer to Note No. 3 in Replacement Parts list.

©John F. Rider, Publisher

RCA MFG. CO., INC.

MODELS 8M1, 8M2
R-F Chassis Wiring
Parts Layout
MODEL 8M2
Power Unit Layout

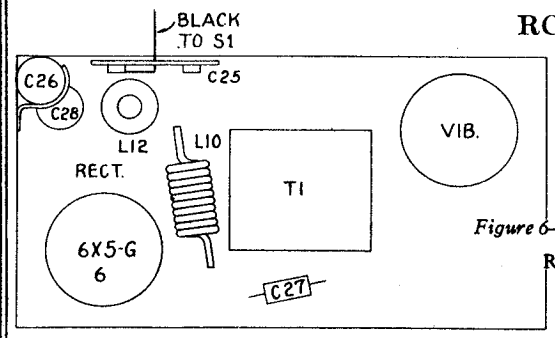

Figure 6—Parts Location for Power Unit (Model 8M2, Run "A")

Refer to Note No. 2 in Replacement Parts list.

© R.C.A. MFG. CO., INC.
M-86148-0

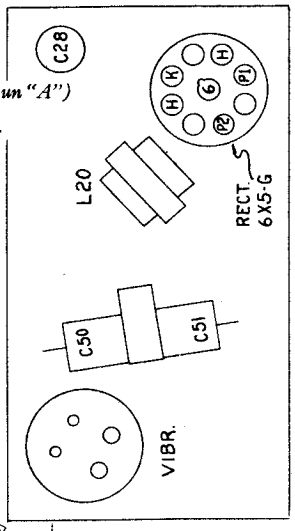

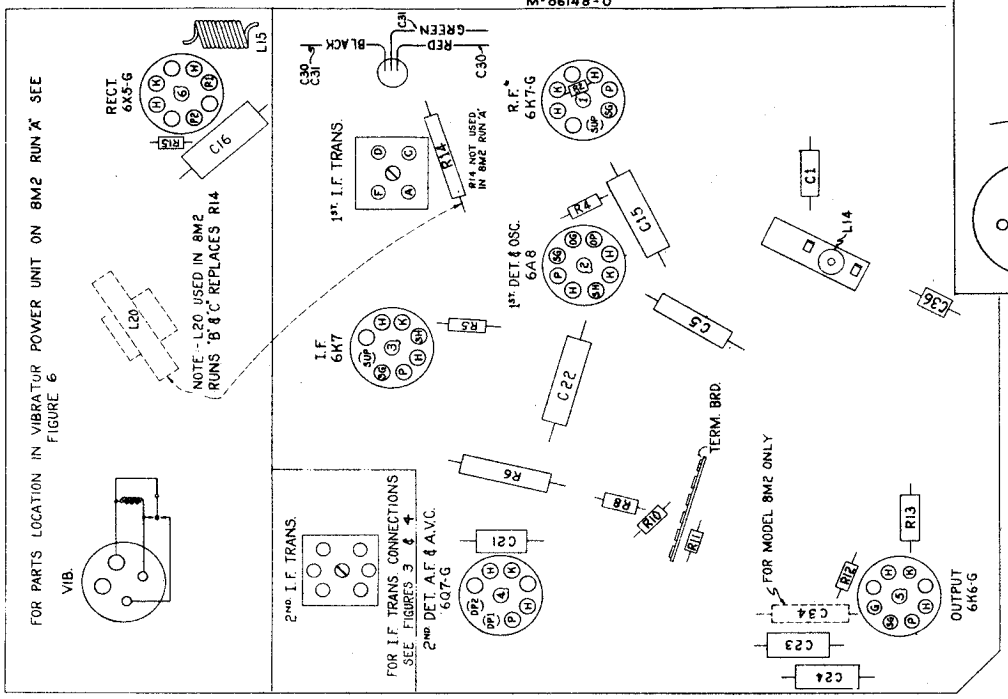

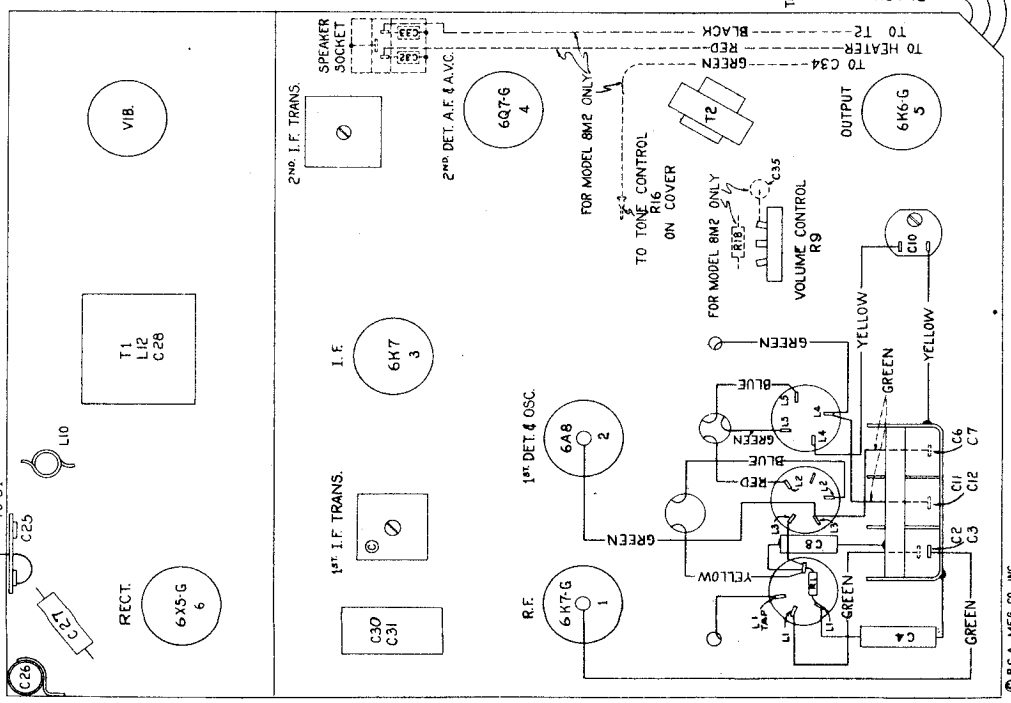

Figure 7—Component Parts Location and R-F Wiring Diagram (Models 8M1 and 8M2)

Refer to Figures 3, 4, and 6 for changes.

Model 8M1 is a six-tube supertheterodyne receiver and a 5-inch electrodynamic loudspeaker in the same case. Model 8M2 employs a similar receiver to Model 8M1 but with an 8-inch electrodynamic loudspeaker separately contained in a cylindrical housing. Other features of design include an r-f amplifier stage; magnetite-core i-f and antenna transformers; automatic volume control; and ignition-suppression filters in both the antenna and power-input circuits. In addition, Model 8M2 has an aural-compensated volume control and continuously variable tone control.

TUNING RANGE..... 550 to 1,550 kc

©John F. Rider, Publisher

©John F. Rider, Publisher

POWER OUTPUT RATINGS

Maximum ..... 3.5 watts
Undistorted ..... 1.75 watts

LOUDSPEAKER

Type ..... Electrodynamic
Voice-Coil Impedance ..... 3 ohms at 400 cycles

POWER SUPPLY RATING

Supply Voltage ..... 6.3 volts
Current Drain ..... 6.6 amperes
Fuse Protection ..... 15 ampere

PILOT LAMP ..... Mazda No. 51, 7.5 volts, 0.2 amp.

ALIGNMENT FREQUENCIES ..... I.F., 260 kc; Oscillator, 600 kc and 1,400 kc; Detector, 1,400 kc; Antenna, 1,400 kc

Service Data

Loudspeaker.—Centering of the loudspeaker is made in the usual manner with three, narrow, celluloid or paper feelers after first removing the front dust cover. This may be removed by softening its cement with a light application of acetone, using care not to allow the acetone to flow into the air gap. The dust cover should be cemented in place with ambroid upon completion of adjustment.

Vibrator.—The mechanical vibrator used in the power system has a plug-in base for easy removal from the receiver. Its adjustments have been set during manufacture by means of special equipment. In cases of faulty operation, a replacement unit should be installed.

Antenna Compensating Capacitor.—Trimmer C2 is accessible by removing the plug button from the front cover of the receiver case.

This trimmer must be adjusted for maximum signal output on a weak station near 1,400 kc after installation and with the antenna properly connected.

Dial Pointer Adjustment.—With receiver and control unit properly installed in car, rotate tuning knob to its extreme clockwise position and then to its extreme counter-clockwise position, irrespective of location of pointer on dial. Pull out dial lamp socket from control unit, locate the pointer adjusting screw at bottom of hole and turn with a small screwdriver until the pointer on dial is at the end calibration mark beyond "55" on the dial scale. Final adjustment may be made, if desired, by tuning in a station of known frequency and adjusting dial pointer to the frequency of the station.

Power Switch and Volume Control Adjustment.—Rotate the "Off-On-Volume" control knob to its extreme clockwise position and then back to its extreme counter-clockwise position. This sets the friction-clutch mechanism in proper alignment.

Alignment Procedure

Calibrate the tuning-dial pointer to the low-frequency calibration mark as outlined under "Dial Pointer Adjustment."

Perform alignment in proper order tabulated below, starting with No. 1 and following all operations across, then No. 2, etc. Adjustment locations are shown on figures 8 and 9.

Cathode-ray alignment is preferable; the connections to the chassis are: Vertical "Hi" to yellow volume-control lead, "0" to chassis. If an output indicator is used, connect it across the loudspeaker voice coil and advance the receiver volume control to full-volume position.

Connect the "low" output terminal of the test oscillator to the receiver chassis for all alignment operations. Regulate the output of the test oscillator so that minimum signal is applied to the receiver to obtain an observable output indication. This will avoid a-v-c action.

The term "Ant. Conn." means that the test oscillator signal should be applied to the receiver at the antenna connector on side of case. "Dummy antenna" means the device which must be connected between the "high" test-oscillator output and the point of connection to the receiver in order to obtain ideal alignment. "No signal, 550-750 kc" means that the receiver should be tuned to a point between 550 and 750 kc where no signal is received from a station or the local (heterodyne) oscillator.

For further details on alignment, refer to booklet "RCA Victor Receiver Alignment."

Order of Alignment	Test Oscillator			Receiver Dial Setting	Circuit to Adjust	Adjustment Symbols	Adjust to Obtain
	Connection to Receiver	Dummy Antenna	Frequency Setting				
1	6K7 I-F Grid Cap	.001 Mfd.	260 kc	No Signal 550-750 kc	2nd I-F Trans.	L8 and L9	Max. (peak)
2	6A8 Det. Grid Cap	.001 Mfd.	260 kc	No Signal 550-750 kc	1st I-F Trans.	L6 and L7	Max. (peak)
3	Ant. Conn.	150 Mmfd.	600 kc	600 kc	L-F Osc.	C10	Max. (peak)
4	Ant. Conn.	150 Mmfd.	1,400 kc	1,400 kc	H-F Osc.	C11	Max. (peak)
5	Ant. Conn.	150 Mmfd.	600 kc	Rock Thru 600 kc	L-F Osc.	C10	Max. (peak)
6	Ant. Conn.	150 Mmfd.	1,400 kc	1,400 kc	H-F Osc.	C11	Max. (peak)
7	Ant. Conn.	150 Mmfd.	1,400 kc	1,400 kc	Det.	C6	Max. (peak)
8	Ant. Conn.	150 Mmfd.	1,400 kc	1,400 kc	Ant.	C2*	Max. (peak)

*** Re-adjust C2 after installation as outlined under "Antenna Compensating Capacitor."**

Stock No.	DESCRIPTION	Unit List Price
	RECEIVER ASSEMBLIES	
13543	Bracket—Chassis mounting bottom bracket and studs assembly	$0.65
11978	Capacitor—Adjustable trimmer (C10)	.50
30802	Capacitor—22 Mmfd. (C36)	.20
14262	Capacitor—100 Mmfd. (C13, C14)	.30
* 12404	Capacitor—120 Mmfd. (C17, C18)	.30
12952	Capacitor—330 Mmfd. (C32, C33)—Model 8M2 only	.25
* 13894	Capacitor—390 Mmfd. (C19)	.25
14498	Capacitor—680 Mmfd. (C1)	.30
30800	Capacitor—1,000 Mmfd. (C27)	.30
4838	Capacitor—.005 Mfd. (C24)	.25
5148	Capacitor—.007 Mfd. (C35)—Model 8M2 only	.20
* 30626	Capacitor—.0075 Mfd. (C16)	.30
12882	Core—Adjustable core and stud for antenna coil	.20
30798	Coupling—Tuning condenser flexible shaft insulating coupling	.55
13691	Filter—Antenna filter (L14)	.75
30791	Gear—Large gear located on shaft of tuning condenser	.90
13694	Guide—Volume control flexible shaft guide	.25
30801	Pin—Contact pin for tone control lead	.10
14561	Resistor—220 ohms, insulated, ½ watt (R2, R5)—(R5 in Model 8M2 only)	.20
30538	Resistor—330 ohms, insulated, ½ watt (R5)—Model 8M1 only	.20
5164	Resistor—560 ohms, carbon type ½ watt (R13)	.20
* 6134	Resistor—1,200 ohms, carbon type, 1 watt (R14)	.22
30146	Resistor—4,700 ohms, insulated, ½ watt (R8)	.20
* 12695	Resistor—15,000 ohms, insulated, ½ watt (R15)	.20
11671	Resistor—18,000 ohms, carbon type, 2 watt (R6)	.22
* 12454	Resistor—33,000 ohms, insulated, ½ watt (R17)—Model 8M2 only	.20
12412	Resistor—47,000 ohms, insulated, ½ watt (R18)—Model 8M2 only	.20
12286	Resistor—56,000 ohms, insulated, ½ watt (R4)	.20
11281	Resistor—100,000 ohms, insulated, 1/10 watt (R1)	.15
12285	Resistor—470,000 ohms, insulated, ½ watt (R11, R12)	.20
13730	Resistor—1 Meg., insulated, ½ watt (R10)	.20
12201	Resistor—1.5 Meg., insulated, ½ watt (R7)	.20
3584	Ring—Retaining ring for R.F. coil shield	.03
5129	Ring—Retaining ring for Radiotron shield	.03
13472	Ring—Retaining ring for oscillator coil shield	.03
13471	Ring—Retaining ring for antenna coil shield	.03
12218	Shield—Radiotron shield	.20
13686	Socket—4-contact vibrator socket	.20
11196	Socket—8-contact Radiotron socket	.25
12007	Spring—Retaining spring for core Stock Nos. 12882 or 12908	.02
30796	Transformer—First I-F transformer (L6, L7, C13, C14)	2.25
* 30483	Transformer—Second I-F transformer (L8, L9, C17, C18) (this unit stamped 84096-4)	2.25
30795	Transformer—Output transformer (T2)	1.65
* 30799	Transformer—Vibrator power transformer (T1, L12, C28)	5.30
13688	Vibrator—Plug-in vibrator	3.35
13420	Volume Control—Model 8M1 only (R9)	1.00
12366	Volume Control—Model 8M1 only (R9)	1.50
	REPRODUCER ASSEMBLIES (84173-4) Model 8M1	
30804	Cone—Reproducer cone and voice coil (L13)	1.15
30803	Reproducer—Complete (L11, L13)	3.95
	REPRODUCER ASSEMBLIES (84189-2) Model 8M2	
30806	Cable—3-conductor shielded speaker cable complete with male plug	.95
30808	Cone—Reproducer cone and voice coil (L13)	1.40
30805	Housing—Reproducer housing complete, less speaker unit and cable	2.20
30807	Reproducer—Speaker unit only—less case, cable, and mounting parts (L11, L13)	5.45
	CONTROL BOX ASSEMBLIES Models 8M1 and 8M2	
30817	Cord—Dial drive cord—25 ft. length only	1.25
30820	Cover—Cover shell and spring used on control shafts, beneath knobs	.15
30822	Dial—Oblong etched glass dial	.50
30818	Dial—Round etched glass dial	.50
30813	Dial Unit—Comprising round dial, escutcheon, pointer disc, spring barrel, and cord assembled—less dial lamp and dial lamp socket	2.50
30821	Dial Unit—Comprising oblong dial, escutcheon, pointer disc, spring barrel, and cord assembled—less dial lamp and dial lamp socket	2.50
30819	Indicator—Indicator pointer disc	.45
11765	Lamp—Dial lamp	.23
30816	Socket—Dial lamp socket and lead	.70
30814	Tuning Unit—Comprising knob shaft, bearing, and gear case—less knob	2.00
30815	Volume Unit—Comprising knob shaft, bearing, and on-off switch—less knob Note—Knobs, escutcheon, and mounting parts are included in kits to be supplied by dealer for particular car in which installation is to be made.	1.30
	MISCELLANEOUS ASSEMBLIES	
4293	Capacitor—Ammeter capacitor	.80
5025	Capacitor—Generator capacitor	.45
13109	Capacitor—0.5 Mfd. (C26)	.70
5023	Fuse—15 ampere	.08
14393	Capacitor—.01 Mfd. (C21)	.30
4858	Capacitor—.01 Mfd. (C22, C23)	.25
4870	Capacitor—.025 Mfd. (C4)	.20
5198	Capacitor—.035 Mfd. (C34)—Model 8M2 only	.20
4868	Capacitor—.05 Mfd. (C5, C9)	.20
4839	Capacitor—0.1 Mfd. (C15)	.30
30797	Capacitor Pack—Comprising two sections each 8 Mfd. (C30, C31)	1.65
30793	Coil—Antenna coil and shield (L1)	1.80
30792	Coil—Oscillator coil—less shield (L4, L5)	1.15
30794	Coil—R.F. coil—less shield (L2, L3)	1.45
30790	Condenser—3-gang variable tuning condenser (C2, C3, C6, C7, C11, C12)	4.95
12006	Core—Adjustable core and stud for I.F. transformers	.15
30809	Housing—Receiver case—less speaker screen—Model 8M1 only	7.30
30810	Housing—Receiver case—Model 8M2 only	7.10
4290	Insulator—Fuse holder insulating sleeve	.02
30842	Knob—Tone control knob—Model 8M2 only	.13
7766	Lead—"A" lead—ammeter end—complete with female section of fuse holder	.40
12445	Lead—"A" lead—chassis end—complete with male section of connector	.26
13708	Lead—Antenna lead-in, approx. 36 in. long complete with 2 male sections of connector	1.15
30811	Shaft—Flexible shaft for tuning control—approx. 25½ in. long	1.20
13926	Shaft—Flexible shaft for volume control—approx. 25½ in. long	1.20
12502	Socket—Pin-socket and bracket assembly for tone control lead—Model 8M2 only	.30
12248	Socket—3-contact socket and bracket for speaker cable—Model 8M2 only	.25
12254	Stud—Speaker mounting stud assembly for Model 8M2	.45
12448	Stud—Receiver mounting stud, washer and nut assembly	.45
5024	Suppressor—Distributor suppressor	.40
12249	Tone control—Model 8M2 only	1.00
	*** MISCELLANEOUS SUBSTITUTE PARTS**	
	NOTE No. 1—MODEL 8M1 (Run "A")	
	A portion of these receivers were constructed with a second i-f transformer different from that listed above. Such receivers may be identified by letter "A" preceding the code stamped on the chassis partition (e. g. "A7M20" etc.) and also by reference to figure 3.	
	For replacements in such receivers, do not use i-f transformer Stock No. 30483 or capacitor (C17 and C18) Stock No. 12404 listed above. Instead use:	
30407	Capacitor—115 Mmfd. (C17 and C18)	.25
13693	Transformer—Second I-F transformer (L8, L9, C17, C18) (this unit stamped 72970-1)	2.05
	NOTE No. 2—MODEL 8M2 (Run "A")	
	A portion of these receivers were constructed with a vibrator transformer different from that listed above. Such receivers may be identified by letter "A" preceding the code stamped on the chassis partition (e. g. "A7M20" etc.) and also by presence of two additional and separate choke coils (L12 and L20). Refer to figures 5 and 6.	
	For replacements in such receivers, do not use vibrator transformer Stock No. 30799; capacitor (C16) Stock No. 30626; resistor (R14) Stock No. 6134; or resistor (R15) Stock No. 12695. Instead use:	
13695	Capacitor—2 sections, each .01 Mfd. (C50, C51)	.80
5019	Capacitor—0.5 Mfd. (C28)	.60
30255	Coil—"A" filter choke coil (L12)	.80
13696	Coil—"B" choke coil (L20)	1.65
13690	Transformer—Vibrator power transformer (T1)	5.00
	NOTE No. 3—MODEL 8M2 (Run "B")	
	A portion of these receivers were constructed with a second i.f. transformer different from that listed above, and the substitution of a "B" choke coil in place of resistor (R14). Such receivers may be identified by letter "B" preceding the code stamped on the chassis partition (e. g. "B7M20" etc.) and by the presence of an iron core "B" choke coil (L20) in the power unit section. Refer to figures 4 and 5.	
	For replacements in such receivers, do not use resistor (R14) Stock No. 6134; i-f transformer Stock No. 30483; capacitor (C17, C18) Stock No. 12404; resistor (R17) Stock No. 12454; or capacitor (C19) Stock No. 13894. Instead use:	
30407	Capacitor—115 Mmfd. (C17, C18)	.25
12761	Capacitor—285 Mmfd. (C19)	.25
13696	Coil—"B" choke coil (L20)	1.65
5132	Resistor—47,000 ohms, carbon type, 1/10 watt (R17)	.15
12229	Transformer—Second I-F transformer (L8, L9, C17, C18, C19, R17) (this unit stamped 72652-2)	2.15
	NOTE No. 4—MODEL 8M2 (Run "C")	
	A portion of these receivers were constructed with an iron core "B" choke coil (L20) instead of resistor (R14). Such receivers may be identified by letter "C" preceding the code stamped on the chassis partition (e. g. "C7M20" etc.). Refer to figure 5.	
	For replacements in such receivers, do not use resistor (R14) Stock No. 6134. Instead use:	
13696	Coil—"B" choke coil (L20)	1.65

ALL PRICES ARE SUBJECT TO CHANGE OR WITHDRAWAL WITHOUT NOTICE.

RCA MFG. CO., INC.

MODELS 8M3, 8M4
Schematics, Socket Trimmers, Specs.

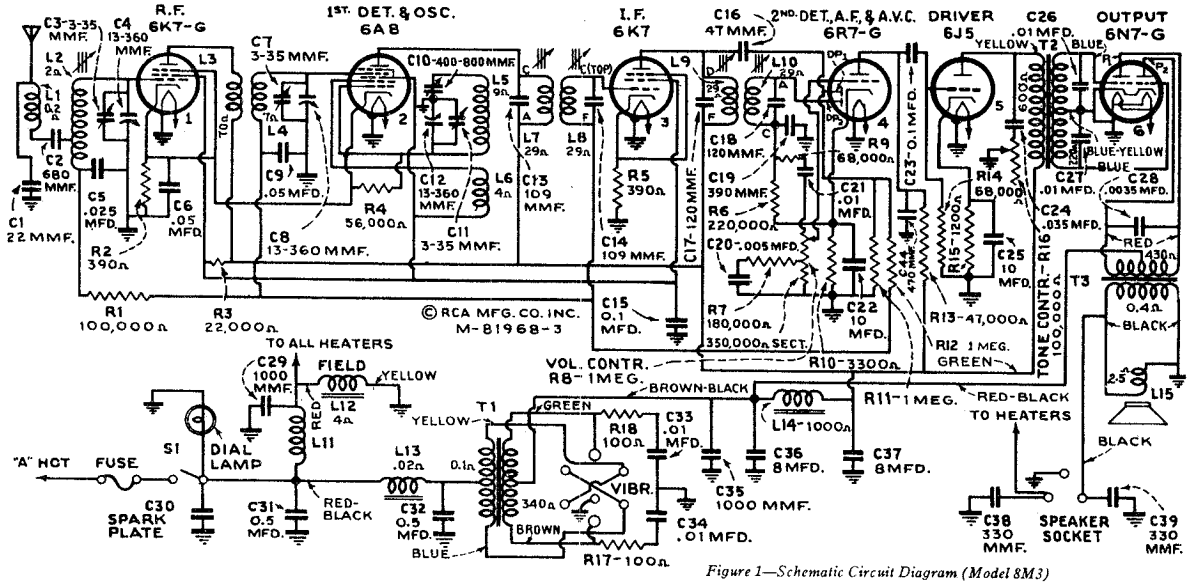

Figure 1—Schematic Circuit Diagram (Model 8M3)

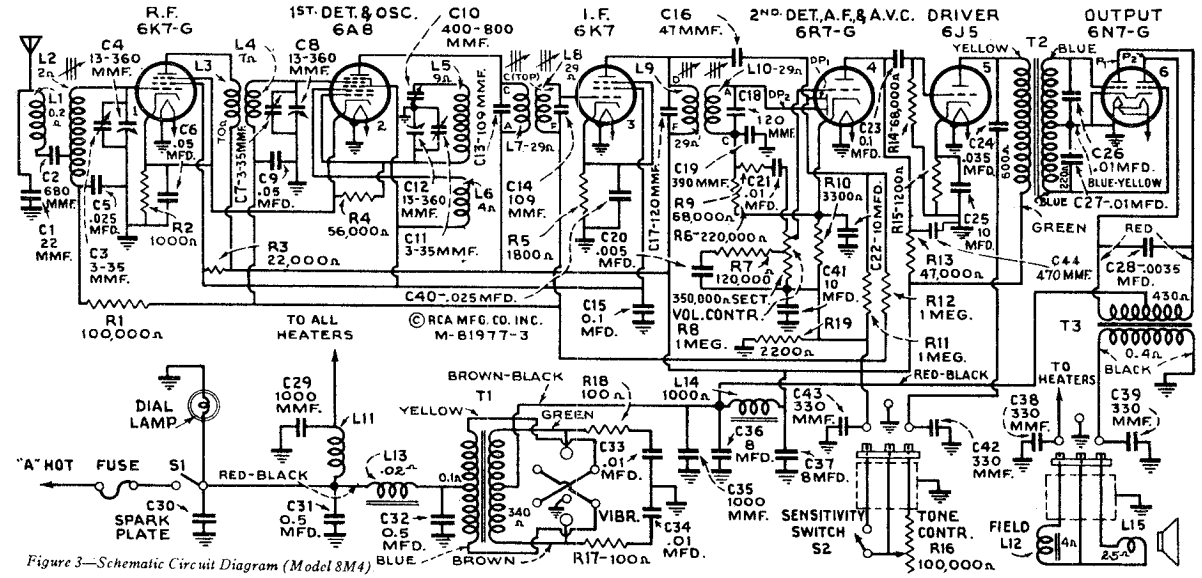

Figure 3—Schematic Circuit Diagram (Model 8M4)

General Description

Model 8M3 consists of a six-tube, superheterodyne automobile receiver and a six-inch electrodynamic loudspeaker contained in the same housing. Design features include an r-f amplifier stage; magnetite core i-f and antenna transformers; automatic volume control; continuously variable high-frequency tone control; aural-compensated volume control; ignition-suppression filters in both the antenna and power-input circuits; and a resistance-capacitance coupled audio-driver stage feeding into a push-pull, class-B, power-output stage.

Model 8M4 employs a similar chassis to Model 8M3 but with an eight-inch electrodynamic loudspeaker separately contained in a cylindrical housing. In addition, a sensitivity control is incorporated which permits the listener to alter the receiver sensitivity to suit reception conditions. Model 8M3 has a socket on the receiver case for plugging in an auxiliary speaker, if desired.

TUNING RANGE	550 to 1,550 kc
POWER OUTPUT RATINGS	
Maximum	9 watts
Undistorted	6 watts
LOUDSPEAKER	
Type	Electrodynamic
Voice-Coil Impedance	3 ohms at 400 cycles
POWER SUPPLY RATING	
Supply Voltage	6.3 volts
Current Drain	7.5 amperes
Fuse Protection	15 ampere
PILOT LAMP	Mazda No. 51, 7.5 volts, 0.2 ampere
ALIGNMENT FREQUENCIES	I.F., 260 kc; Oscillator, 600 kc and 1,400 kc; Detector, 1,400 kc; Antenna, 1,400 kc

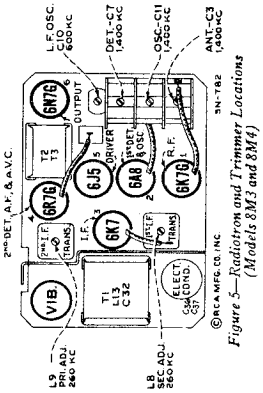

Figure 5—Radiotron and Trimmer Locations (Models 8M3 and 8M4)

©John F. Rider, Publisher

MODELS 8M3,8M4
Parts Layouts
R-F Chassis Wiring

RCA MFG. CO., INC.

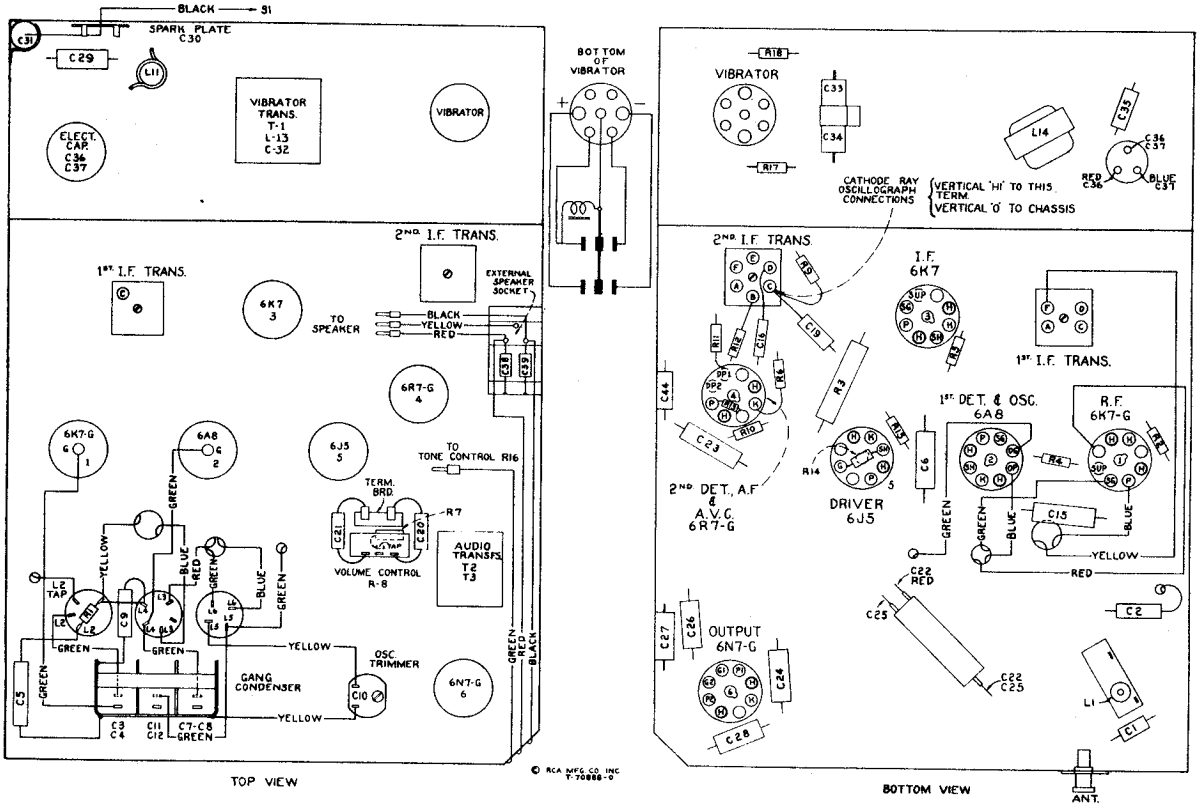

Figure 2—Component Parts Location and R-F Wiring Diagram (Model 8M3)

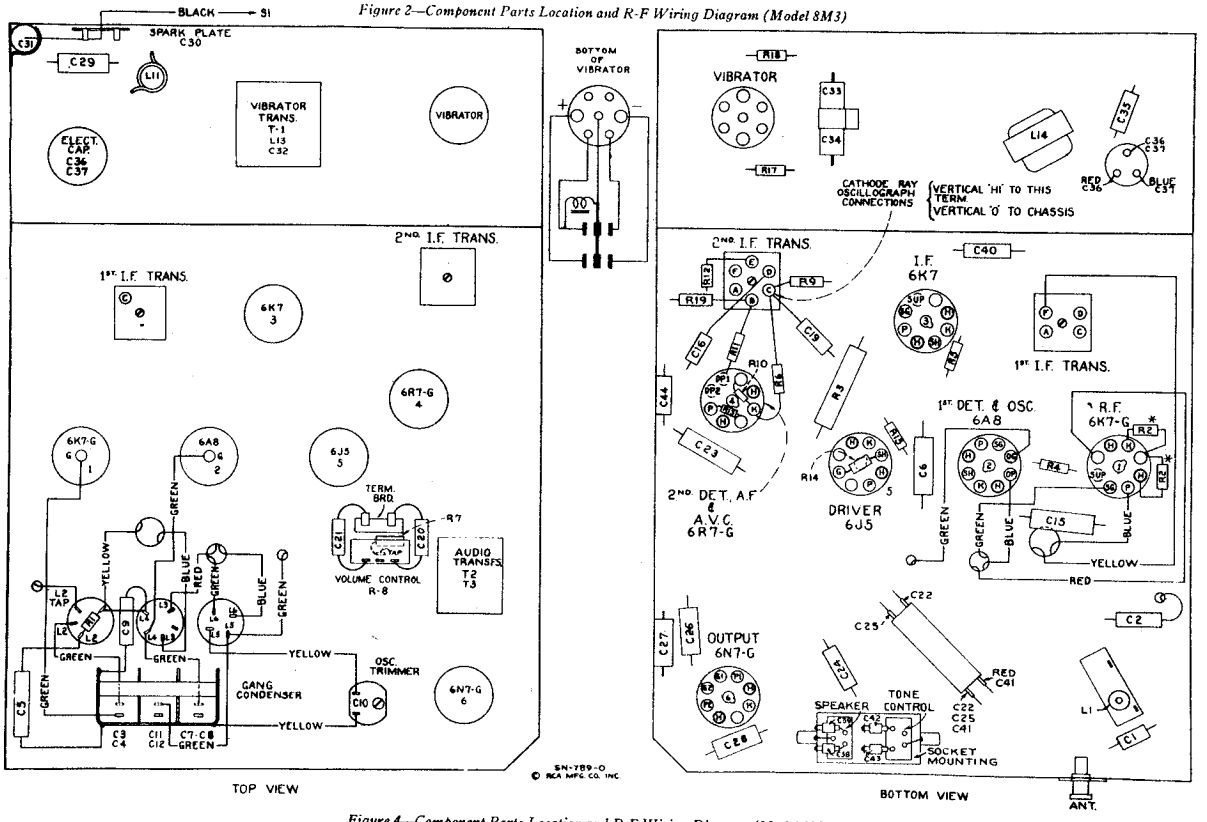

Figure 4—Component Parts Location and R-F Wiring Diagram (Model 8M4)

* R2 may consist of two resistors connected in series having a total value of 1,000 ohms or a single 1,000 ohm resistor. Make replacements with Stock No. 14720.

©John F. Rider, Publisher

(Measured at 6.3 volts battery supply—Volume control minimum—No signal input—Sensitivity control (Model 8M4) clockwise)

Figure 6—Radiotron Socket Voltages and Trimmer Locations (Models 8M3 and 8M4)

Service Data

Antenna Compensating Capacitor.—Trimmer C3 is accessible by removing the plug button from the front cover of the receiver case. This trimmer must be adjusted for maximum signal output on a weak station around 1,400 kc after installation and with the antenna properly connected.

Loudspeaker.—Centering of the loudspeaker is made in the usual manner with three, narrow, celluloid or paper feelers after first removing the front dust cover. This may be removed by softening its cement with a light application of acetone, using care not to allow the acetone to flow into the air gap. The dust cover should be cemented in place with ambroid upon completion of adjustment.

Vibrator.—The mechanical vibrator has a plug-in base for easy removal. Its adjustments have been accurately set during manufacture by means of special equipment. In cases of faulty operation, a replacement unit should be installed. The symmetrical plug-in base provides correct output-voltage polarity on automobiles with either positive or negative "A" battery ground. When positive (+) side of battery is grounded, insert vibrator so positive (+) symbol is nearest label on vibrator-compartment partition; for negative (-) ground, insert with negative (-) symbol nearest label.

Dial Pointer Adjustment.—With receiver and control unit properly installed in car, rotate "Tuning" knob to its extreme clockwise position and then to its extreme counter-clockwise position, irrespective of location of pointer on dial. Pull out dial-lamp socket from control unit, locate the pointer adjusting screw at bottom of hole and turn with a small screwdriver until the pointer on dial is at the end calibration mark beyond "55" on the dial scale. Final adjustment may be made, if desired, by tuning in a station of known frequency and adjusting dial pointer to the frequency of the station.

Power Switch and Volume Control Adjustment.—Rotate the "Off-On-Volume" control knob to its extreme clockwise position and then back to its extreme counter-clockwise position. This sets the friction-clutch mechanism in proper alignment.

Alignment Procedure

Calibrate the tuning-dial pointer to the low-frequency calibration mark as outlined under "Dial Pointer Adjustment."

Perform alignment in proper order tabulated below, starting with No. 1 and following all operations across, then No. 2, etc. Adjustment locations are shown on figures 5 and 6.

Cathode-ray alignment is preferable; the connections to the chassis are shown on figures 2 and 4. If an output indicator is used, connect it across the loudspeaker voice-coil and advance the receiver volume control to full-volume position.

On Model 8M4, the sensitivity control should be placed in its clockwise (maximum sensitivity) position.

Connect the "low" output terminal of the test oscillator to the receiver chassis for all alignment operations. Regulate the output of the test oscillator so that minimum signal is applied to the receiver to obtain an observable output indication. This will avoid a-v-c action.

The term "Ant. Conn." means that the test-oscillator signal should be applied to the receiver at the antenna connector on side of case. "Dummy antenna" means the device which must be connected between the "high" test-oscillator output and the point of connection to the receiver in order to obtain ideal alignment. "No signal, 550-750 kc" means that the receiver should be tuned to a point between 550 and 750 kc where no signal is received from a station or the local (heterodyne) oscillator.

For further details on alignment, refer to booklet "RCA Victor Receiver Alignment."

Order of Alignment	Test Oscillator			Receiver Dial Setting	Circuit to Adjust	Adjustment Symbols	Adjust to Obtain
	Connection to Receiver	Dummy Antenna	Frequency Setting				
1	6K7 I-F Grid Cap	.001 Mfd.	260 kc	No Signal 550-750 kc	2nd I-F Trans.	L9 and L10	Max. (peak)
2	6A8 Det. Grid Cap	.001 Mfd.	260 kc	No Signal 550-750 kc	1st I-F Trans.	L7 and L8	Max. (peak)
3	Ant. Conn.	150 Mmfd.	600 kc	600 kc	L-F Osc.	C10	Max. (peak)
4	Ant. Conn.	150 Mmfd.	1,400 kc	1,400 kc	H-F Osc.	C11	Max. (peak)
5	Ant. Conn.	150 Mmfd.	600 kc	Rock Thru 600 kc	L-F Osc.	C10	Max. (peak)
6	Ant. Conn.	150 Mmfd.	1,400 kc	1,400 kc	H-F Osc.	C11	Max. (peak)
7	Ant. Conn.	150 Mmfd.	1,400 kc	1,400 kc	Det.	C7	Max. (peak)
8	Ant. Conn.	150 Mmfd.	1,400 kc	1,400 kc	Ant.	C3*	Max. (peak)

*** Re-adjust C3 after installation as outlined under "Antenna Compensating Capacitor."**

©John F. Rider, Publisher

MODELS 8M3,8M4
Parts

RCA MFG. CO., INC.

REPLACEMENT PARTS

Insist on genuine factory-tested parts, which are readily identified and may be purchased from authorized dealers.

STOCK No.	DESCRIPTION	Unit List Price
	RECEIVER ASSEMBLIES	
13789	Bracket—Chassis mounting bracket and stud assembly—Model 8M4 only	.75
13543	Bracket—Chassis mounting bracket and stud assembly—Model 8M3 only	.65
30802	Capacitor—22 Mmfd. (C1)	.20
13141	Capacitor—47 Mmfd. (C16)	.25
14262	Capacitor—109 Mmfd. (C13, C14)	.30
12404	Capacitor—120 Mmfd. (C17, C18)	.30
30832	Capacitor—330 Mmfd. (C38, C39, C42, C43)—(C42, C43 in Model 8M4 only)	.20
13894	Capacitor—390 Mmfd. (C19)	.25
11978	Capacitor—Adjustable—400-800 Mmfd. (C10)	.50
30433	Capacitor—470 Mmfd. (C44)	.30
14498	Capacitor—680 Mmfd. (C2)	.30
30793	Coil—Antenna coil and shield (L2)	1.80
30792	Coil—Oscillator coil—less shield (L5, L6)	1.15
30794	Coil—R.F. coil—less shield (L3, L4)	1.45
30823	Condenser—3-gang variable tuning condenser (C3, C4, C7, C8, C11, C12)	5.25
12882	Core—Adjustable core and stud for antenna coil	.20
12006	Core—Adjustable core and stud for I.F. transformer	.15
13996	Coupling—Insulated coupling for tuning condenser shaft	.75
13691	Filter—Antenna filter (L1)	.75
30824	Gear—Large gear for condenser rotor shaft	1.25
30825	Gear—Small worm gear for condenser	1.25
13694	Guide—Volume control shaft guide	.25
13111	Reactor—Filter reactor (L14)	1.75
30540	Resistor—100 ohms, insulated, ½ watt (R17, R18)	.20
12261	Resistor—390 ohms, insulated, ½ watt (R2, R5)—Model 8M3 only	.20
14720	Resistor—1,000 ohms, insulated, ½ watt (R2)—Model 8M4 only	.20
12267	Resistor—1,200 ohms, insulated, ½ watt (R15)	.20
12194	Resistor—1,800 ohms, insulated, ½ watt (R5)—Model 8M4 only	.20
13716	Resistor—2,200 ohms, insulated, ½ watt (R19)—Model 8M4 only	.20
12312	Resistor—3,300 ohms, insulated, ½ watt (R10)	.20
13669	Resistor—22,000 ohms, carbon type, 2 watt (R3)	.25
11646	Resistor—47,000 ohms, insulated, ½ watt (R13)	.20
12286	Resistor—56,000 ohms, insulated, ½ watt (R4)	.20
13715	Resistor—68,000 ohms, insulated, ½ watt (R9, R14)	.20
11281	Resistor—100,000 ohms, carbon type, 1/10 watt (R1)	.15
13734	Resistor—120,000 ohms, insulated, ½ watt (R7)—Model 8M4 only	.20
13698	Resistor—180,000 ohms, insulated, ½ watt (R7)—Model 8M3 only	.20
12264	Resistor—220,000 ohms, insulated, ½ watt (R6)	.20
13730	Resistor—1 meg., insulated, ½ watt (R11, R12)	.20
3584	Ring—Retaining ring for R.F. coil shield	.03
13472	Ring—Retaining ring for oscillator coil shield	.03
13471	Ring—Retaining ring for antenna coil shield	.03
5129	Ring—Tube-shield ring	.03
3623	Shield—R.F. or oscillator coil shield	.20
14491	Shield—Antenna coil shield	.20
12008	Shield—I.F. transformer shield can	.40
12218	Shield—Tube shield and ring	.20
11196	Socket—Radiotron socket	.25
12241	Socket—Vibrator socket	.30
12007	Spring—Retaining spring for core, Stock Nos. 12882 and 12006	.02
30796	Transformer—First I.F. transformer (L7, L8, C13, C14)	2.25
30483	Transformer—Second I.F. transformer (L9, L10, C17, C18)	2.25
12230	Transformer—Audio transformer (T2, T3)	5.65
30827	Transformer—Vibrator power transformer (T1, L13, C32)	3.10
12236	Vibrator	4.00
13711	Volume Control (R8)	1.50
	REPRODUCER ASSEMBLIES (72684-1) Model 8M3	
12482	Board—Reproducer terminal board	.50
12450	Coil—Field coil (L12)	2.00
12451	Cone—Reproducer cone complete (L15)	2.00
9687	Reproducer—Complete	5.65
	REPRODUCER ASSEMBLIES Model 8M4	
13794	Cable—3-conductor shielded reproducer cable, approx. 18-in. long, complete with 3-contact male connector	1.10
13795	Coil—Reproducer field coil (L12) for speaker marked 72947-1	2.25
13796	Cone—Reproducer cone and dust cap (L15) for speaker marked 72947-1	3.30
30834	Cone—Reproducer cone and dust cap for speaker marked 72947-22 (L15)	3.30
11984	Connector—3-contact male connector for reproducer cable	.35
30800	Capacitor—1,000 Mmfd. (C29, C35)	.30
30303	Capacitor—.0035 Mfd. (C28)	.40
4838	Capacitor—.005 Mfd. (C20)	.25
4858	Capacitor—.01 Mfd. (C21, C26, C27)	.25
13695	Capacitor—Two sections each .01 Mfd. (C33, C34)	.80
4870	Capacitor—.025 Mfd. (C5, C40)—(C40 in Model 8M4 only)	.20
5196	Capacitor—.035 Mfd. (C24)	.20
4886	Capacitor—.05 Mfd. (C6, C9)	.20
4839	Capacitor—0.1 Mfd. (C15, C23)	.30
30828	Capacitor—Two sections each 8 Mfd. (C36, C37)	1.60
14902	Capacitor—Comprising two sections, each 10 Mfd. (C22, C25) Model 8M3 only	1.10
30829	Capacitor—Comprising three sections, each 10 Mfd. (C22, C25, C41) Model 8M4 only	1.30
30833	Housing—Reproducer housing complete—less speaker unit and cable	4.00
9774	Reproducer—Speaker unit only—less case, cable, and mounting parts	7.65
13797	Screw—Reproducer housing screw	.06
	CONTROL BOX ASSEMBLIES Model 8M3	
30817	Cord—Dial drive cord—25 ft. length only	1.25
30820	Cover—Cover shell and spring used on control shafts, beneath knobs	.15
30822	Dial—Oblong etched glass dial	.50
30818	Dial—Round etched glass dial	.50
30813	Dial Unit—Comprising round dial, escutcheon, pointer disc, spring barrel, and cord assembled—less dial lamp and dial lamp socket	2.50
30821	Dial Unit—Comprising oblong dial, escutcheon, pointer disc, spring barrel, and cord assembled—less dial lamp and dial lamp socket	2.50
30819	Indicator—Indicator pointer disc	.45
11765	Lamp—Dial lamp	.23
30816	Socket—Dial lamp socket and lead	.70
30814	Tuning Unit—Comprising knob shaft, bearing, and gear case—less knob	2.00
30815	Volume Unit—Comprising knob shaft, bearing, and on-off switch—less knob	1.30
	CONTROL BOX ASSEMBLIES Model 8M4	
13792	Cable—3-conductor shielded tone and sensitivity cable complete with 4-prong plug	1.25
30817	Cord—Dial drive cord—25 ft. length only	1.25
30822	Dial—Oblong etched glass dial	.50
30818	Dial—Round etched glass dial	.50
30821	Dial Unit—Comprising oblong dial, escutcheon, pointer disc, spring barrel and cord assembled—less dial lamp and dial lamp socket	2.50
30813	Dial Unit—Comprising round dial, escutcheon, pointer disc, spring barrel and cord assembled—less dial lamp and dial lamp socket	2.50
30819	Indicator—Indicator pointer disc	.45
30837	Knob—Wing knob	.30
11765	Lamp—Dial lamp	.23
30816	Socket—Dial lamp socket and lead	.70
30835	Tuning Unit—Comprising knob shafts, bearing, gear case and sensitivity switch—less knobs	2.95
30836	Volume Unit—Comprising knob shafts, bearing, tone control and on-off switch—less knobs	3.15
	MISCELLANEOUS ASSEMBLIES	
30839	Case—Receiver case complete—less speaker grille—Model 8M3 only	6.25
30840	Case—Receiver case complete—Model 8M4 only	6.25
13109	Capacitor—0.5 Mfd. (C31)	.70
4293	Capacitor—Ammeter capacitor	.60
5025	Capacitor—Generator capacitor	.45
5023	Fuse—15 ampere	.08
30838	Grille—Speaker grille and cloth—Model 8M3 only	1.15
4290	Insulator—Fuse holder insulator	.02
30642	Knob—Tone control knob—Model 8M3 only	.13
7766	Lead—"A" lead (ammeter end) complete with clip	.40
12445	Lead—"A" lead (set end) complete with male section of connector	.26
13806	Ring—Soft rubber ring for speaker mounting—Model 8M4 only	.60
30811	Shaft—Tuning control flexible shaft—approx. 25⅛-in. long	1.20
13926	Shaft—Volume control flexible shaft—approx. 25⅛-in. long	1.20
12248	Socket—Bracket and socket for speaker cable—Model 8M3 only	.25
12502	Socket—Bracket and socket for tone control lead—Model 8M3 only	.30
13804	Socket—Bracket and socket for speaker and control box cables—Model 8M4 only	.45
12254	Stud—Speaker mounting stud, spacer, and washer assembly—Model 8M4 only	.45
12448	Stud—Receiver mounting stud, washer, and nut assembly	.45
5024	Suppressor—Distributor suppressor	.40
12249	Tone Control—(R16)—Model 8M3 only	1.00

ALL PRICES ARE SUBJECT TO CHANGE OR WITHDRAWAL WITHOUT NOTICE.

©John F. Rider, Publisher

RCA MFG. CO., INC.

MODEL 9M1
Schematic, Voltage Specs. Tuner Views

FREQUENCY RANGE ..... 550-1,550 kc

POWER OUTPUT
Type ..... Pentode
Undistorted ..... 2.1 watts
Maximum ..... 4.1 watts

POWER SUPPLY
"A" ..... 6.3 volt Auto Storage Battery
"B" ..... Non-Synchronous Vibrator
Current Drain ..... 6.75 amps.

ALIGNMENT FREQUENCIES
I-F ..... 455 kc
Ant. ..... 600 and 1,400 kc
Osc. ..... No Adjustment

LOUDSPEAKER
Type ..... Electrodynamic
Size ..... 5 inches
V.C. Impedance ..... 3.2 ohms at 400 cycles
Field Coil Resistance ..... 5 ohms
App. Field Coil Voltage Drop ..... 6 volts

TUBE SOCKETS ARE VIEWED FROM UNDER SIDE OF CHASSIS. VOLTAGE READINGS AT INDICATED SOCKET PRONGS ARE TO CHASSIS. ALIGNMENT IS TO BE MADE AT THE FREQUENCIES SHOWN AT THE TRIMMING ADJUSTMENTS. WHERE NO VOLTAGE READING IS SHOWN, IT INDICATES ZERO VOLTAGE OR A VERY LOW READING. VOLTAGES ARE TO BE MEASURED WITH NO SIGNAL. FIGURES AT CATHODES ARE CATHODE CURRENT IN MILLIAMPERES.

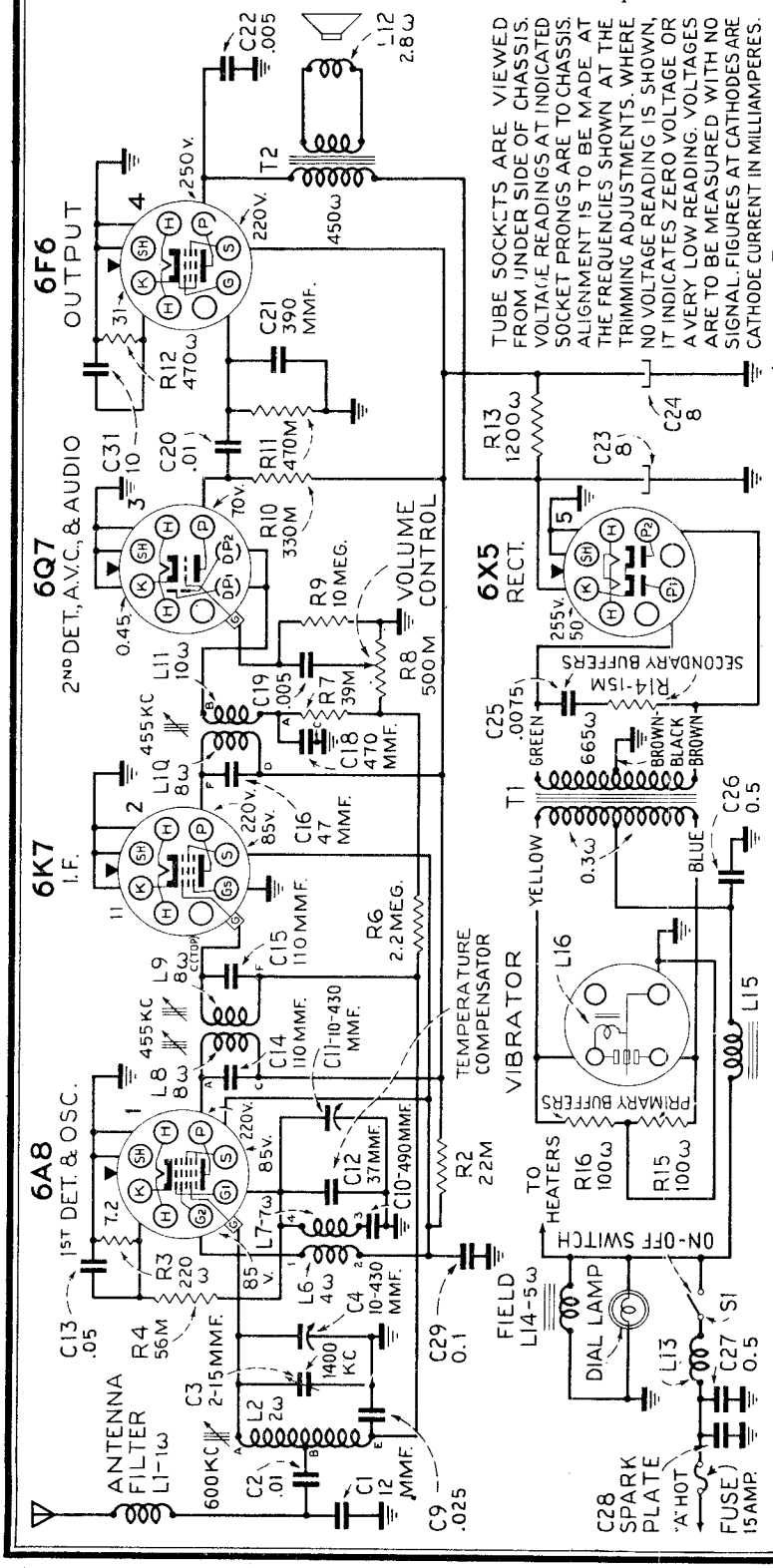

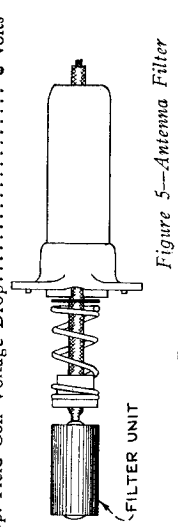

Figure 5—Antenna Filter

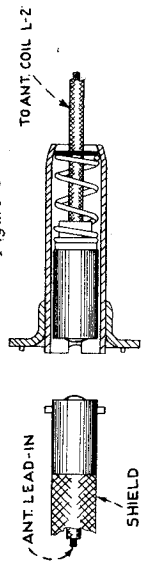

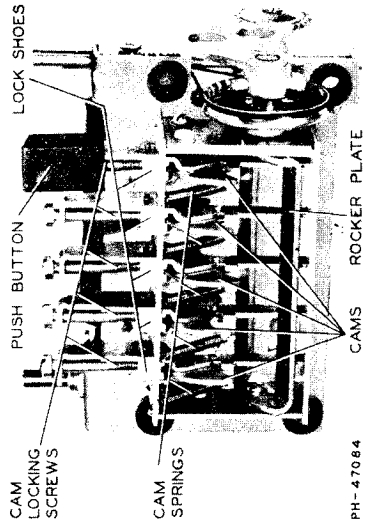

Figure 2—Bottom View of Push Button Mechanism

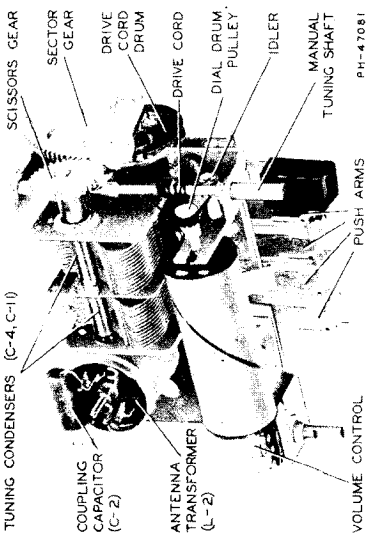

Figure 1—Push Button and Manual Tuning Assembly

©John F. Rider, Publisher

MODEL 9M1
Socket, Trimmer
Chassis Wiring

RCA MFG. CO., INC.

Alignment, Parts
Tuner, Drive Cord Data

Antenna Circuit.—The antenna circuit is designed to work with a low capacity antenna having a total capacity including the shielded lead-in not to exceed 150 mmf. If larger antennas, such as screened top or a double under the running-board having a total capacity of 200 to 550 mmf. is to be used, it will be necessary to reduce the value of the antenna coupling capacitor C-2 from .01 to approximately 200 mmf. (.0002). For even larger antennas such as insulated steel tops, a correspondingly smaller value of C-2 (approximately 125 to 150 mmf.) should be used keeping in mind to use the largest value possible with which the antenna circuit can be aligned.

After installation, and with antenna connected, tune in a weak station near 1,400 kc and adjust compensator trimmer (C-3) for maximum signal output. This trimmer is accessible by prying off the nameplate between the control knobs.

Antenna Filter.—A filter is included in the antenna circuit. Being completely shielded, it prevents radiating ignition interference within the set. It also reduces the possibility of picking up vibrator interference. As shown in Figure 5, the filter unit is mounted inside a steel shell which in turn is welded to the chassis. The shielded antenna lead-in makes contact with the filter unit within the steel shell and is held in place by a bayonet type connector.

Push Button Tuning Mechanism.—The push button tuning mechanism used in this receiver is of the mechanical type, wherein the movement of the button actually turns the tuning condenser to any pre-determined setting. The movement is actuated thru a Push-Arm, Cam, Rocker Plate and Sector Gear, which meshes with a Scissors Gear directly fastened to the tuning condenser shaft—(See Figures 1 and 2.) The scissors gear prevents backlash between the sector gear and the tuning condenser. Since the sector gear is mounted directly on the rocker plate shaft, the position of the rocker plate will accurately determine the position of the tuning condenser.

The cams (Figure 2) which determine the stop points for each button are mounted on the push arms and are locked in place by the locking screws and lock-shoes, which press firmly against the cams when the locking screws are tightened. **Care should be used when locking screws are tightened not to use excessive force as the threads may become damaged or stripped.**

Adjustments for Push Button Tuning are very easily made. To adjust a push button for any station proceed as follows:

(1) Pull the push button off the push arm.
(2) Loosen the cam locking screw one-half turn.
(3) Using the Dial Tuning Control tune in the station.
(4) Press the push arm in as far as it will go and accurately retune station.
(5) With the push button still held down, tighten cam locking screw.
(6) Replace the push button.

With the locking screw tight, the cam is locked in position and when the button is pushed in, the cam pressure causes the rocker plate to assume the position that tunes in the desired station. (See Figure 2.)

Manual Tuning Dial.—A manual tuning knob is provided so that additional stations may be tuned in as desired. The manual tuning shaft is connected thru a cord drive to a drum on the rocker plate shaft. This same cord drives the dial drum by passing over a pulley on the drum shaft. Figure 6 shows the complete cord drive assembly and the correct number of turns which the cord should be wrapped around the drive shaft and dial drum pulley. Stops are provided on the dial drum so that dial scale adjustment is made by tuning the set to the extreme ends of the band.

	SPEAKER ASSEMBLIES (Speaker 84391-1)	
30782	Cone—Speaker cone and voice coil (L12)	1.20
30781	Speaker—Complete	4.40
30783	Transformer—Output transformer (T2)	1.45
	SPEAKER ASSEMBLIES (Speaker 84391-3)	
31771	Cone—Speaker cone and voice coil (L12)	1.25
31770	Speaker—Complete	4.00
31772	Transformer—Output transformer (T2)	1.20

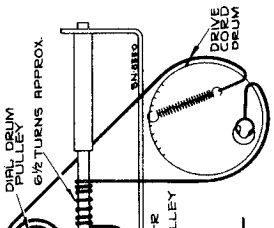

Figure 6—Drive Cord Hookup

	MISCELLANEOUS ASSEMBLIES	
4288	Body—Fuse holder body for ammeter lead	.03
31656	Retainer—Fuse retainer	.15
5025	Capacitor—Generator capacitor	.45
31653	Case—Complete receiver case only—less name plate and dial scale	4.85
4291	Clip—Spring clip for ammeter lead	.06
31456	Covers—3-protective celluloid covers for call letters	
31654	Dial—Dial scale and holder	.90
4286	Ferrule—Bushing and ferrule for fuse holder	.03
4287	Fuse—3-amp.	.08
4290	Insulator—Tube insulating sleeve for fuse holder	.02
31668	Knob—Station selector or volume control knob	.30

ALL PRICES ARE SUBJECT TO CHANGE OR WITHDRAWAL WITHOUT NOTICE.

STOCK No.	DESCRIPTION	Unit List Price
	RECEIVER ASSEMBLIES	
13602	Capacitor—12 mmfd. (C1)	.35
13778	Capacitor—27 mmfd. (C2)	.30
12465	Capacitor—47 mmfd. (C18)	.30
14262	Capacitor—110 mmfd. (C14, C16)	.30
13584	Capacitor—150 mmfd. (C19)	.35
30673	Capacitor—470 mmfd. (C18)	.35
31736	Capacitor—490 mmfd. temp. coef. (C10)	.80
13688	Capacitor—.005 mfd. (C9, C22)	.30
30688	Capacitor—.0075 mfd. (C25)	.30
14393	Capacitor—.01 mfd. (C2, C20)	.30
30689	Capacitor—.025 mfd. (C13)	.30
30892	Capacitor—.05 mfd. (C19)	.30
1839	Capacitor—.1 mfd. (C29)	.30
31781	Capacitor—Comprising 8 mfd., and one 10 mfd. sections (C23, C24, C31)	1.65
31598	Clip—Spring clip to hold oscillator coil	1.05
31596	Coil—Oscillator coil (L6, L7)	.45
31977	Coil—Antenna filter (L11)	.75
31594	Coil—Oscillator coil (L6, L7)	.75
11765	Lead—Ammeter lead (chassis end) complete with male section of fuse holder	.20
30640	Resistor—100 ohms, ½ watt (R16)	.20
30540	Resistor—220 ohms, ½ watt (R3)	.20
14581	Resistor—470 ohms, ½ watt (R12)	.20
30499	Resistor—470 ohms, 1 watt (R11)	.20
30498	Resistor—1,000 ohms, 1 watt (R13)	.20
12695	Resistor—15,000 ohms, ½ watt (R14)	.20
13669	Resistor—22,000 ohms, ½ watt (R2)	.20
13668	Resistor—47,000 ohms, ½ watt (R5)	.20
10286	Resistor—68,000 ohms, ½ watt (R4)	.20
14983	Resistor—330,000 ohms, ½ watt (R10)	.20
13670	Resistor—1 meg., ½ watt (R9)	.20
12679	Resistor—2.2 meg., ½ watt (R6)	.20
13601	Resistor—10 meg., ½ watt (R9)	.20
31618	Shield—Retaining ring for coil, Stock No. 31766	.25
31619	Socket—Antenna socket	.25
31319	Socket—Tube socket	.25
13688	Socket—Vibrator socket	.20

IMPORTANT ALIGNMENT NOTES.

† Make the generator connection to the receiver thru a shielded lead-in having not more than 50 mmf. (.00005) capacity with a male connector attached for connection to antenna socket. If C-2 has been changed, as outlined under "Antenna Circuit," for reason of a high capacity antenna, the Dummy Antenna should be the same value as the antenna itself.

* Re-adjust C-3 after installation as outlined under "Antenna Circuit" in "Service Hints."

Each step of the alignment should be repeated in its original order for greater accuracy. Always keep the output from the generator at its lowest possible value, to prevent the A.V.C. action of the receiver from interfering with accurate alignment.

Alignment adjustment locations are shown on the top and bottom parts location views of chassis.

Only the dummy antenna indicated in the chart for any particular frequency should be used. Grid cap leads should remain in place during alignment.

Oscillator circuit alignment is not required in this receiver at either end of the band; the oscillator coil is pre-adjusted for inductance in the factory.

Since the oscillator coil is unshielded, the case has some effect on its inductance. Therefore alignment must be done either with the chassis in the case or with a steel plate (covering the bottom of chassis), substituting for the case.

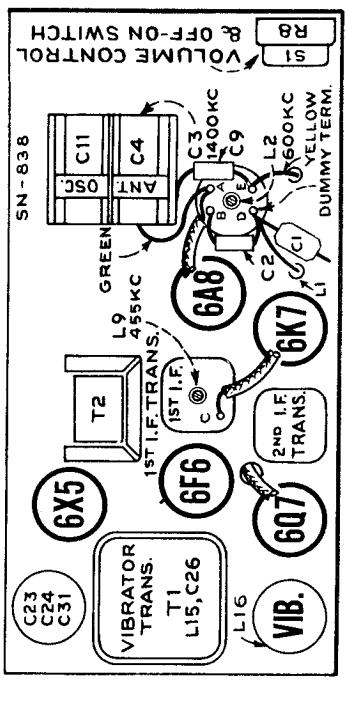

Figure 3—Location of Parts and Alignment Adjustments on Top of Chassis

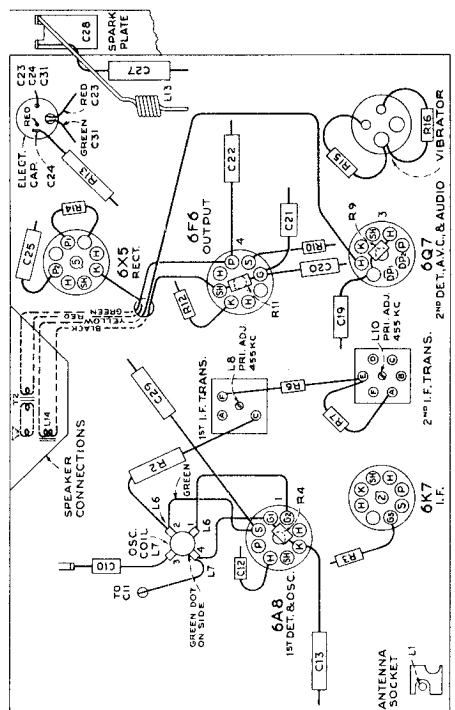

Figure 4—Location of Parts and Alignment Adjustments on Bottom of Chassis

PRELIMINARY:
Output meter connections ..... Across speaker voice coil
Output meter readings to indicate 1 watt ..... 1.8 volts
Generator ground lead connections ..... To chassis
Dummy antenna value to be in series with generator output ..... See Chart Below
Connection of generator output lead ..... See Chart Below
Generator modulation ..... 30%, 400 cycles
Position of Volume Control ..... Fully clockwise
Chassis must be in its case with front end removed, when aligning R-F circuit.

Position of Dial Pointer	Generator Frequency	Dummy Antenna	Generator Connection	Adjustment Symbol	Circuit Adjusted
No Signal 550-750 kc	455 kc	.001 mfd.	6K7 Grid	L-10	2nd I.F. Trans.
No Signal 550-750 kc	455 kc	.001 mfd.	6A8 Grid	L-8, L-9	1st I.F. Trans.
1,400 kc	1,400 kc	.0001 mfd. †	Ant. Lead	C-3	Ant.
600 kc	600 kc	.0001 mfd. †	Ant. Lead	L-2	Ant.
1,400 kc	1,400 kc	.0001 mfd. †	Ant. Lead	C-3 *	Ant.

NOTE: No oscillator alignment adjustments are required in this receiver.

©John F. Rider, Publisher

RCA MFG. CO., INC.

MODEL 9M2, Chassis RC357A
Schematic, Voltage, Socket
Trimmer, Chassis Wiring

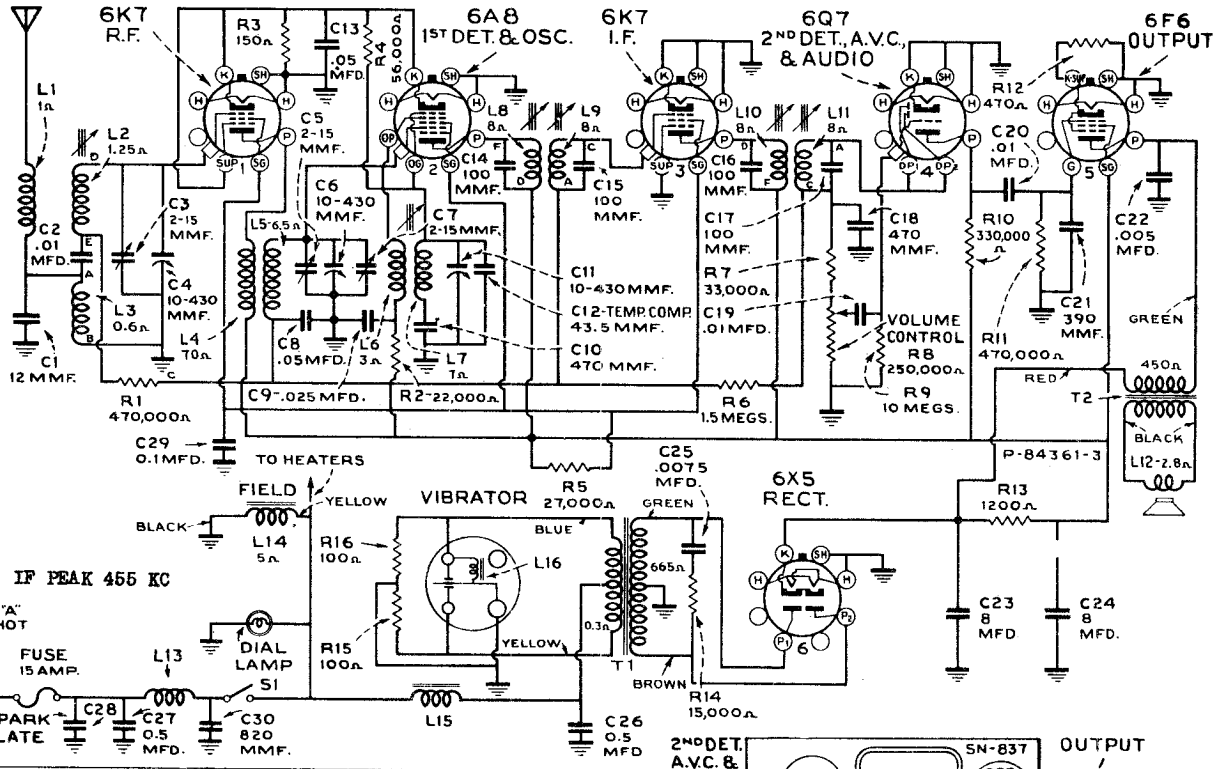

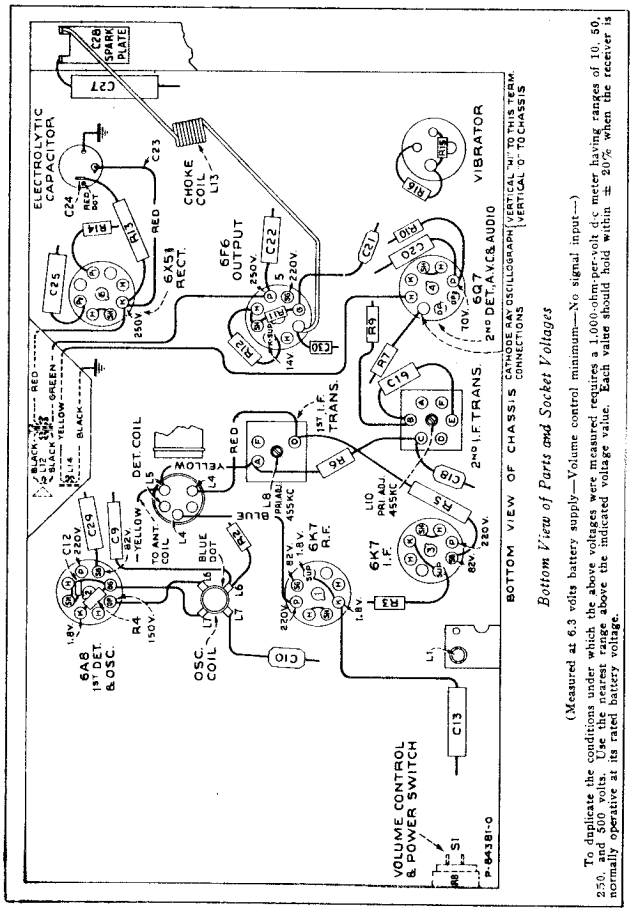

Bottom View of Parts and Socket Voltages

(Measured at 6.3 volts battery supply—Volume control minimum—No signal input—)

To duplicate the conditions under which the above voltages were measured requires a 1,000-ohm-per-volt d-c meter having ranges of 10, 50, 250, and 500 volts. Use the nearest range above the indicated voltage value. Each value should hold within ± 20% when the receiver is normally operative at its rated battery voltage.

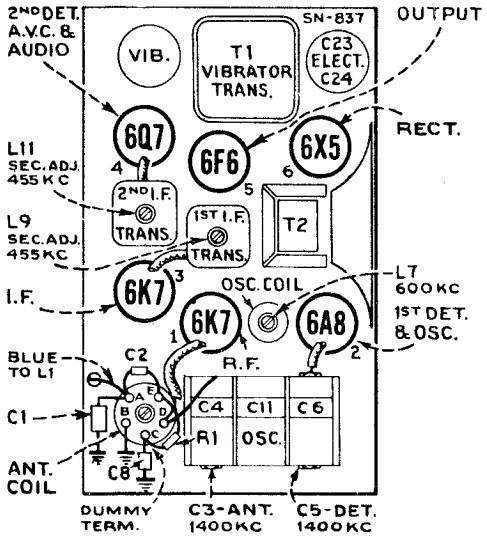

Top View of Chassis

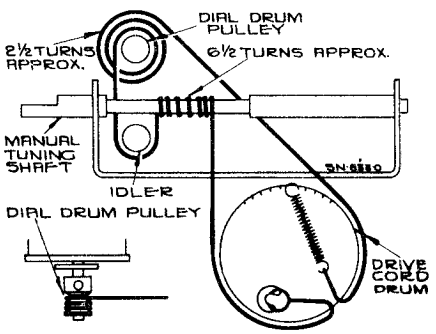

Drive Cord Hookup

©John F. Rider, Publisher

©John F. Rider, Publisher

Antenna Circuit.—The antenna circuit is designed to work with an antenna having a total capacity including the shielded lead-in not to exceed 150 mmf. If an antenna having a larger capacity is to be used, it will be necessary to **add** a capacitor in series with the lead from antenna filter L-1 to the antenna coil terminal ("A"). Where a "Double Under the Running Board" type of antenna is to be used having a capacity of approximately 200 mmf. the capacitor added should be approximately 300 mmf. The insulated running board type having an approximate capacity of 550 mmf. will require a capacitor of approximately 200 mmf. Cars using an insulated steel top of approximately 3,500 mmf. will require a series capacitor of 150 mmf.

After installation, and with antenna connected, tune in a weak station near 1,400 kc and adjust compensator trimmer (C-3) for maximum signal output. This trimmer is accessible by prying off the nameplate between the control knobs.

Antenna Filter.—A filter is included in the antenna circuit. Being completely shielded, it prevents radiating ignition interference within the set. It also reduces the possibility of picking up vibrator interference. As shown, the filter unit is mounted inside a steel shell which in turn is welded to the chassis. The shielded antenna lead-in makes contact with the filter unit within the steel shell and is held in place by a bayonet type connector.

Manual Tuning Dial.—A manual tuning knob is provided so that additional stations may be tuned in as desired. The manual tuning shaft is connected through a cord drive to a drum on the rocker plate shaft. This same cord drives the dial drum by passing over a pulley on the drum shaft. The complete cord drive assembly and the correct number of turns which the cord should be wrapped around the drive shaft and dial drum pulley are shown. Stops are provided on the dial drum so that dial scale adjustment is made by tuning the set to the extreme ends of the band.

Push Button Tuning Mechanism.—The push button tuning mechanism used in this receiver is of the mechanical type, wherein the movement of the button actually turns the tuning condenser to any pre-determined setting. The movement is actuated through a Push-Arm, Cam, Rocker Plate and Sector Gear, which meshes with a Scissors Gear directly fastened to the tuning condenser shaft. The scissors gear prevents backlash between the sector gear and the tuning condenser. Since the sector gear is mounted directly on the rocker plate shaft, the position of the rocker plate will accurately determine the position of the tuning condenser.

The cams which determine the stop points for each button are mounted on the push arms and are locked in place by the locking screws and lock-shoes, which press firmly against the cams when the locking screws are tightened. **Care should be used when locking screws are tightened not to use excessive force as the threads may become damaged or stripped.**

Adjustments for Push Button Tuning are very easily made. To adjust a push button for any station proceed as follows:

(1) Pull the push button off the push arm.

(2) Loosen the cam locking screw one-half turn.

(3) Using the Dial Tuning Control tune in the station.

(4) Press the push arm in as far as it will go and accurately retune station.

(5) With the push button still held down, tighten cam locking screw.

(6) Replace the push button.

With the locking screw tight, the cam is locked in position and when the button is pushed in, the cam pressure causes the rocker plate to assume the position that tunes in the desired station.

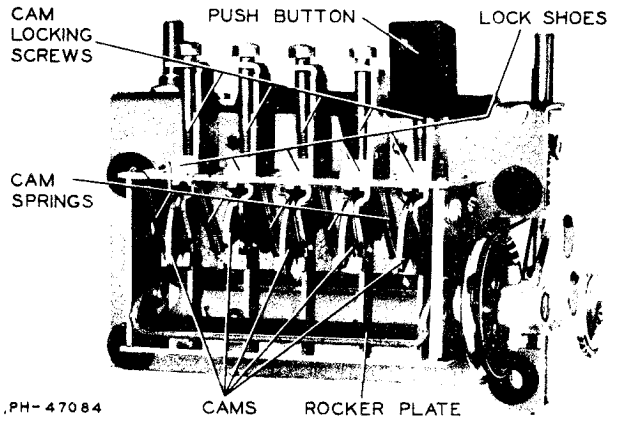

Bottom View of Push Button Mechanism

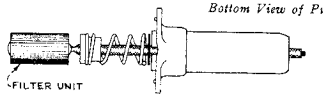

Antenna Filter

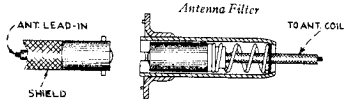

Alignment Frequencies	
I-F	455 kc
Antenna	1,400 kc
R-F	1,400 kc
Oscillator	600 kc

Power Output	
Type	Pentode
Undistorted	2.0 watts
Maximum	3.5 watts

Loudspeaker	
Type	Electrodynamic
Size	5 inches
Voice-Coil Impedance	3.2 ohms at 400 cycles
Field Coil Resistance	5 ohms
App. Field Coil Voltage Drop	6 volts

Alignment Procedure

PRELIMINARY:

Output meter connections	Across speaker voice coil
Output meter readings to indicate 1 watt	1.8 volts
Generator ground lead connections	To chassis
Dummy antenna value to be in series with generator output	See Chart Below
Connection of generator output lead	See Chart Below
Generator modulation	30%, 400 cycles
Position of Volume Control	Fully clockwise

Position of Dial Pointer	Generator Frequency	Dummy Antenna	Generator Connection	Adjustment Symbol	Circuit Adjusted
No Signal 550-750 kc	455 kc	.001 mfd.	6K7 I.F. Grid	L-10, L-11	2nd I.F. Trans.
No Signal 550-750 kc	455 kc	.001 mfd.	6A8 Grid	L-8, L-9	1st I.F. Trans.
Rock Through 600 kc	600 kc	.0001 mfd.†	Ant. Lead	L-7	Osc.
1,400 kc **	1,400 kc	.0001 mfd.†	Ant. Lead	C-5	Det.
1,400 kc **	1,400 kc	.0001 mfd.†	Ant. Lead	C-3	Ant.
Rock Through 600 kc	600 kc	.0001 mfd.†	Ant. Lead	L-7	Osc.
1,400 kc **	1,400 kc	.0001 mfd.†	Ant. Lead	C-5	Det.
1,400 kc **	1,400 kc	.0001 mfd.†	Ant. Lead	C-3*	Ant.

IMPORTANT ALIGNMENT NOTES

† Make the generator connection to the receiver through a shielded lead-in having not more than 50 mmf. (.00005) capacity with a male connector attached for connection to antenna socket. If a capacitor has been added in series with the lead from antenna filter L-1 to the antenna coil, as outlined under "Antenna Circuit," for reason of a high capacity antenna, the Dummy Antenna should be the same value as the antenna itself.

* Re-adjust C-3 after installation as outlined under "Antenna Circuit" in "Service Hints."

Each step of the alignment should be repeated in its original order for greater accuracy. Always keep the output from the generator at its lowest possible value, to prevent the A.V.C. action of the receiver from interfering with accurate alignment.

Alignment adjustment locations are shown on the top and bottom parts location views of chassis.

Only the dummy antenna indicated in the chart for any particular frequency should be used. Grid cap leads should remain in place during alignment.

** OSCILLATOR CIRCUIT

A magnetite core is used to provide temperature stability. The conventional high frequency trimmer has been replaced with a fixed temperature-compensating capacitor (C-12) which determines the high frequency range. Since the inductance of L-7 is adjustable, the conventional series trimmer has been replaced with a fixed capacitor (C-10). C-10 is a special capacitor having zero temperature coefficient to provide for oscillator stability in the low frequency range. Aligning the receiver for 600 kc is accomplished by adjusting L-7 to the antenna and det. circuits (gang condenser must be rocked while making this adjustment) The 1,400 kc alignment is accomplished by adjusting the antenna and the det. trimmers (C-3 and C-5) to the oscillator.

	RECEIVER ASSEMBLIES	
13002	Capacitor—12 mmfd. (C1)	.35
31728	Capacitor—43.5 mmfd. (C12)	.35
30904	Capacitor—100 mmfd. (C14, C15, C16, C17)	.25
13894	Capacitor—390 mmfd. (C21)	.35
30433	Capacitor—470 mmfd. (C18)	.35
31727	Capacitor—470 mmfd., temp. coeff. (C10)	.80
31730	Capacitor—820 mmfd. (C30)	
4838	Capacitor—.005 mfd. (C22)	.25
30026	Capacitor—.015 mfd. (C26)	.30
14393	Capacitor—.01 mfd. (C2, C19, C20)	.30
30882	Capacitor—.05 mfd. (C13)	.20
4836	Capacitor—.05 mfd. (C8)	.20
4839	Capacitor—0.1 mfd. (C29)	.30
12741	Capacitor—0.5 mfd. (C27)	.30
31309	Capacitor—Comprising two 8 mfd. sections (C23, C24)	1.65
31601	Coil—Antenna coil less shield (L2, L3)	1.10
31977	Coil—Antenna filter (L1)	.45
31595	Coil—Oscillator coil and shield (L6, L7)	1.35
31600	Coil—r-f coil less shield (L4, L5)	1.15
11765	Lamp—Dial lamp	.23
20641	Lead—Ammeter lead (chassis end), complete with male section of fuse holder	.30
30640	Resistor—100 ohms, ½ watt (R15, R16)	.20
13428	Resistor—150 ohms, ½ watt (R3)	.20
30498	Resistor—170 ohms, ½ watt (R12)	.20
6134	Resistor—1200 ohms, 1 watt (R13)	.22
12695	Resistor—13,000 ohms, ½ watt (R14)	.20
13998	Resistor—22,000 ohms, ½ watt (R2)	.20
13477	Resistor—27,000 ohms, 1 watt (R5)	.22
12454	Resistor—33,000 ohms, ½ watt (R7)	.20
12286	Resistor—56,000 ohms, ½ watt (R4)	.20
14983	Resistor—330,000 ohms, ½ watt (R10)	.20
12285	Resistor—470,000 ohms, ½ watt (R1, R11)	.20
12201	Resistor—1.5 meg., ½ watt (R6)	.20
13601	Resistor—10 meg., ½ watt (R9)	.20
13471	Ring—Retaining ring for coil Stock No. 31601	.03
3584	Ring—Retaining ring for coil Stock No. 31600	.03
31639	Socket—Dial lamp socket	.25
31319	Socket—Tube socket	.25
13688	Socket—Vibrator socket	.20
30957	Transformer—First i-f transformer (L8, L9, C14, C15)	1.00
31593	Transformer—Second i-f transformer (L10, L11, C16, C17)	1.95
31597	Transformer—Vibrator power transformer (T1, L15, C26)	4.85
13688	Vibrator—Plug-in vibrator complete (L16)	3.35
31838	Volume control and power switch (R8, S1)	1.50

	TUNING UNIT ASSEMBLIES	
31605	Condenser—3-gang variable condenser (C3, C4, C5, C6, C7, C11, C12)	3.80
31614	Cord—Variable condenser drive cord	.10
31725	Drum—Indicator drum assembly	.40
31610	Drum—Variable condenser drive cord drum	.40
31612	Gear—Variable condenser drive gear sector—fastens on cam shaft	.60
31645	Mechanism—Comprising 5-push button levers and cams, cam plate, and variable condenser mounting bracket, assembled	2.55
31606	Pulley—Indicator drum pulley	.20
31607	Pulley—Pulley for indicator drum bracket	.10
4389	Screw—No. 6-32 x 3/16 in. set screw for pulley Stock No. 31606	.03
31613	Screw—No. 8-32 x ¼ in. set screw for gear Stock No. 31612	.02
31611	Screw—No. 8-32 x ¼ in. set screw for drum Stock No. 31610	.02
31609	Shaft—Station selector knob shaft	.20
31615	Spring—Variable condenser drive cord tension spring	.02
30585	Spring—Push button arm tension spring	.08
2917	Washer—"C" washer to hold knob shaft	.03
31608	Washer—"C" washer to hold pulley Stock No. 31607	.01
	SPEAKER ASSEMBLIES Speaker 84391-1	
30782	Cone—Speaker cone and voice coil (L12)	1.20
30781	Speaker complete	4.40
30783	Transformer—Output transformer (T2)	1.45
	SPEAKER ASSEMBLIES Speaker 84391-3	
31771	Cone—Speaker cone and voice coil (L12)	1.25
31770	Speaker complete	4.00
31772	Transformer—Output transformer (T2)	1.20

ALL PRICES ARE SUBJECT TO CHANGE OR WITHDRAWAL WITHOUT NOTICE

©John F. Rider, Publisher

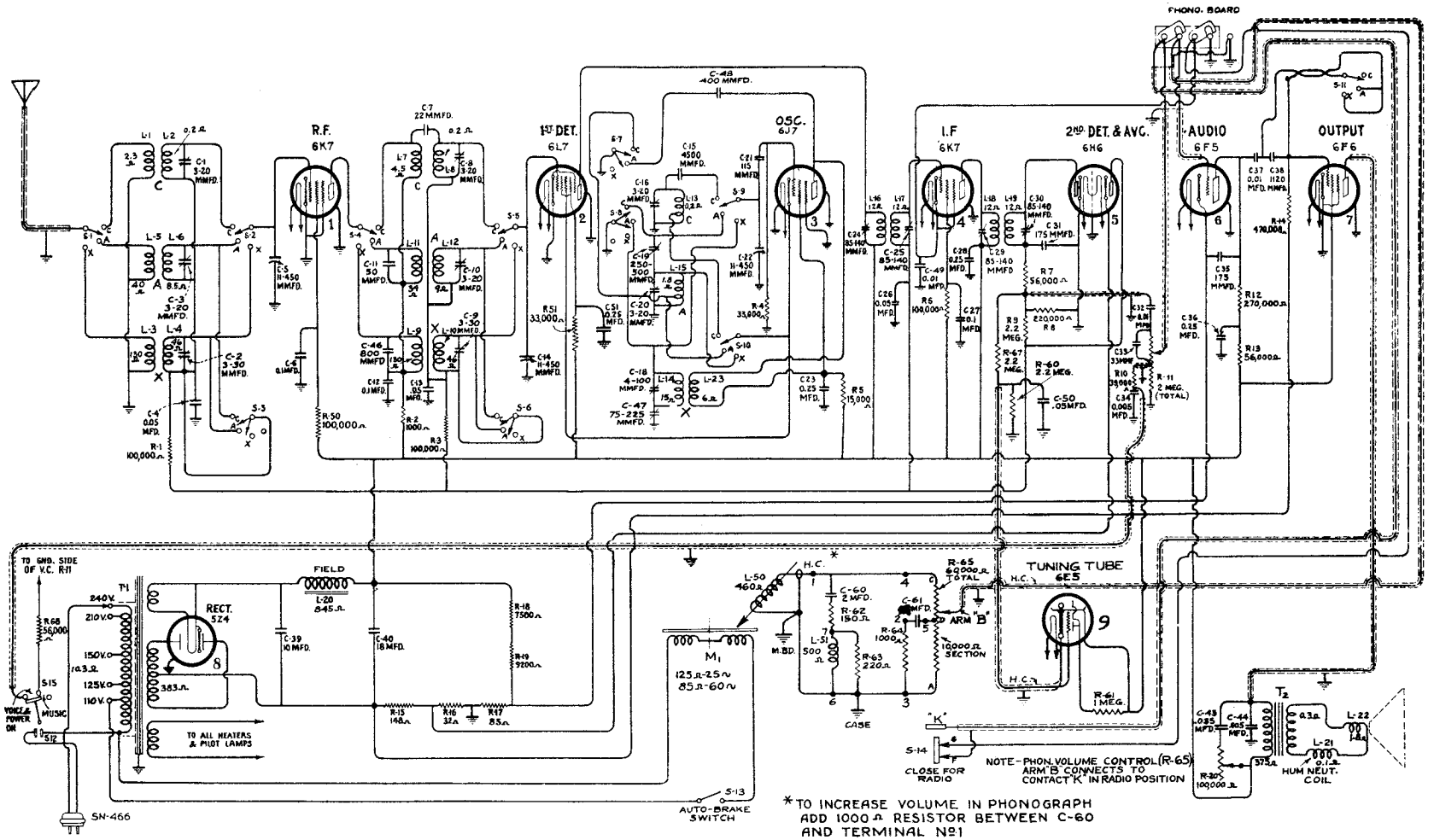

Figure 6—Schematic Circuit Diagram
(Model D9-19 with metal rectifier and low-frequency tone control)

Model D9-19 (with low-frequency tone control and metal Rectifier)

Service Data for Model D9-19 are directly applicable to these instruments except as follows:

(1) The schematic and wiring diagrams for Model D9-19 (with low-frequency tone control and metal rectifier) are shown by figures 6 and 7.

(2) Washer Stock No. 11886 should be used for replacement instead of Stock No. 11230 in all Models D9-19. See parts list herein for description and price.

(3) Bracket Stock No. 13615 should be used for replacement instead of Stock Nos. 11191 and 11192 in all Models D9-19. See parts list herein for description and price.

(4) Refer to Substitute and Additional Replacements Parts contained herein for other parts changes.

MODEL D9-19 Late
Chassis Wiring
Parts

RCA MFG. CO., INC.

Model D9-19 (with metal rectifier)

5170	Capacitor—0.25 mfd. (C51).....	.25
11329	Resistor—Voltage divider resistor, comprising one 148-ohm, one 32-ohm, and one 85-ohm section (R15, R16, R17)	.52
5033	Resistor—33,000 ohms—Carbon type—1 watt—(R51)—Package of 5.....	1.10
5029	Resistor—56,000 ohms—Carbon type—1/4 watt—(R68)—Package of 5.....	1.00
3118	Resistor—100,000 ohms—Carbon type—1/4 watt—(R50)—Package of 5.....	1.00
11195	Socket—Five-contact rectifier Radiotron socket	.15
5224	Switch—Low-frequency tone control and power switch (S12, S15).....	1.00
11804	Transformer—Power transformer—105-125 volts—25-60 cycles.....	6.02
11805	Transformer—Power transformer—100-130/140-160/195-250 volts—40-60 cycles—(T1)	7.95
11886	Washer—Spring washer used to hold field coil securely—Package of 5.....	.20
13615	Bracket—Tuning tube mounting bracket and clamp assembly.....	.25

Stock Nos. 4858 (C50*), 11248, 4748, 11245, 11273, 4794, 11133, 11242, 11243, 11230, 11191, and 11192 are not used in chassis having metal rectifier.

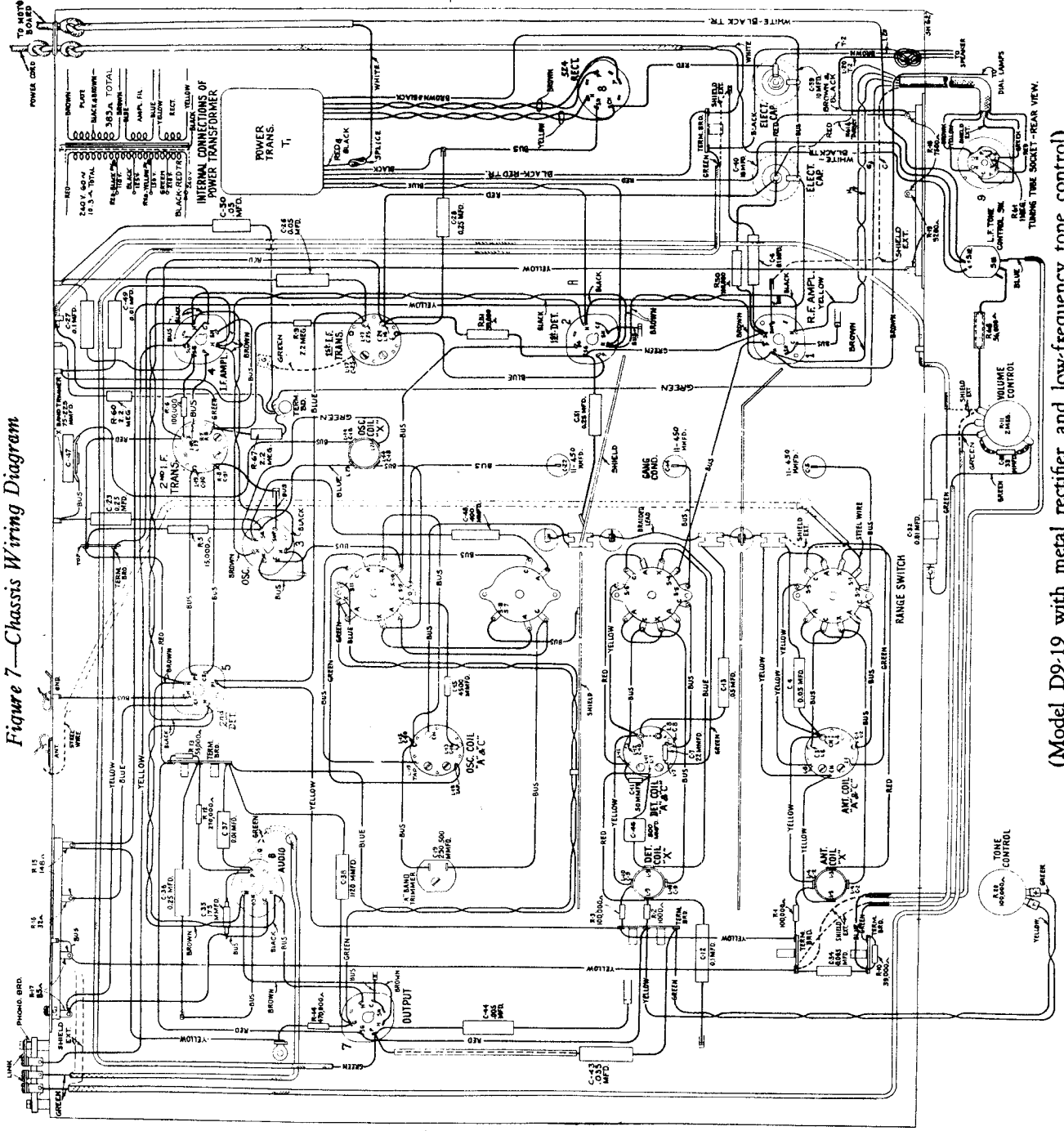

Figure 7—Chassis Wiring Diagram

(Model D9-19 with metal rectifier and low-frequency tone control)

©John F. Rider, Publisher

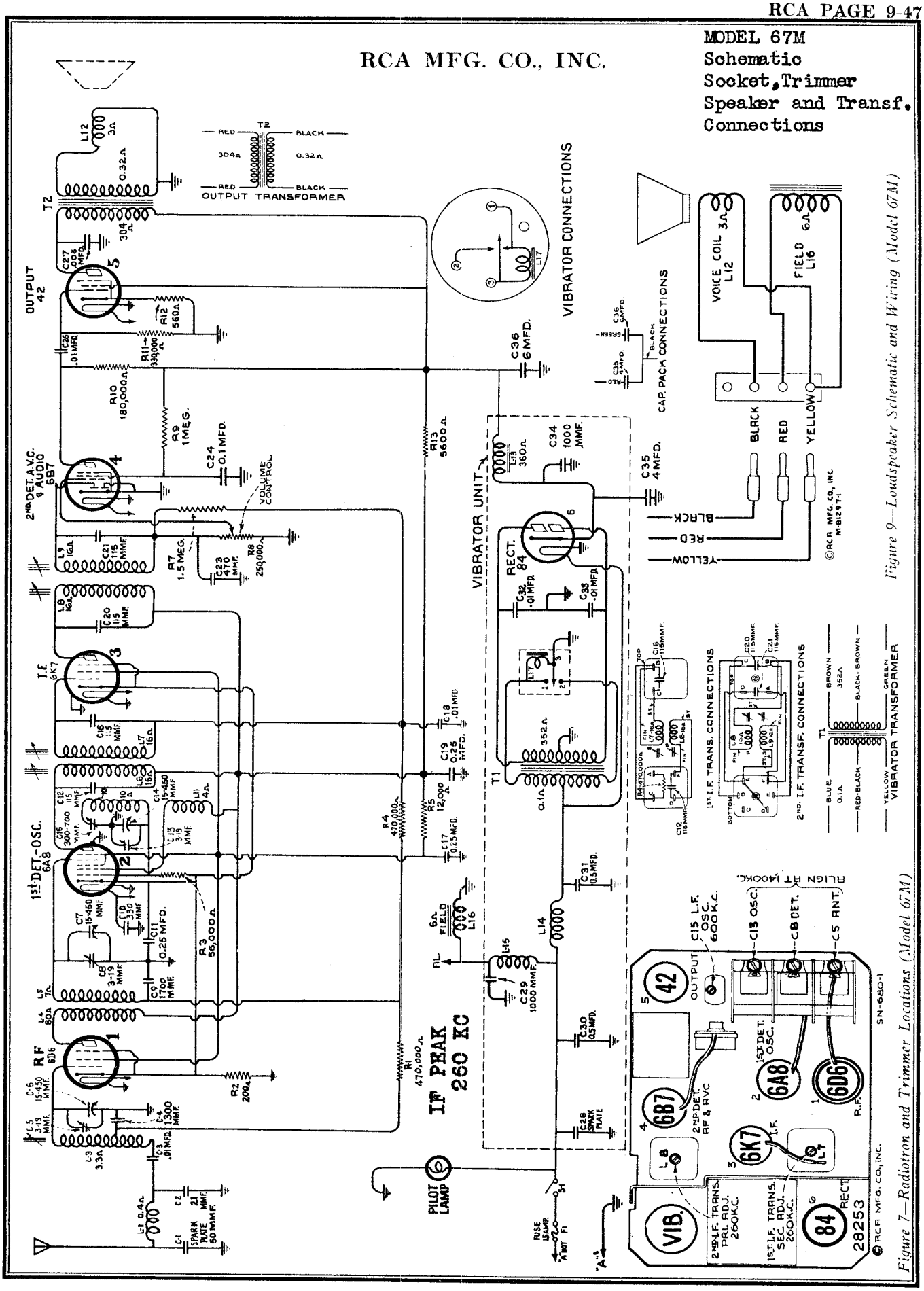

Figure 9—Loudspeaker Schematic and Wiring (Model 67M)

Figure 7—Radiotron and Trimmer Locations (Model 67M)

©John F. Rider, Publisher

MODEL 67M
Chassis Wiring

RCA MFG. CO., INC.

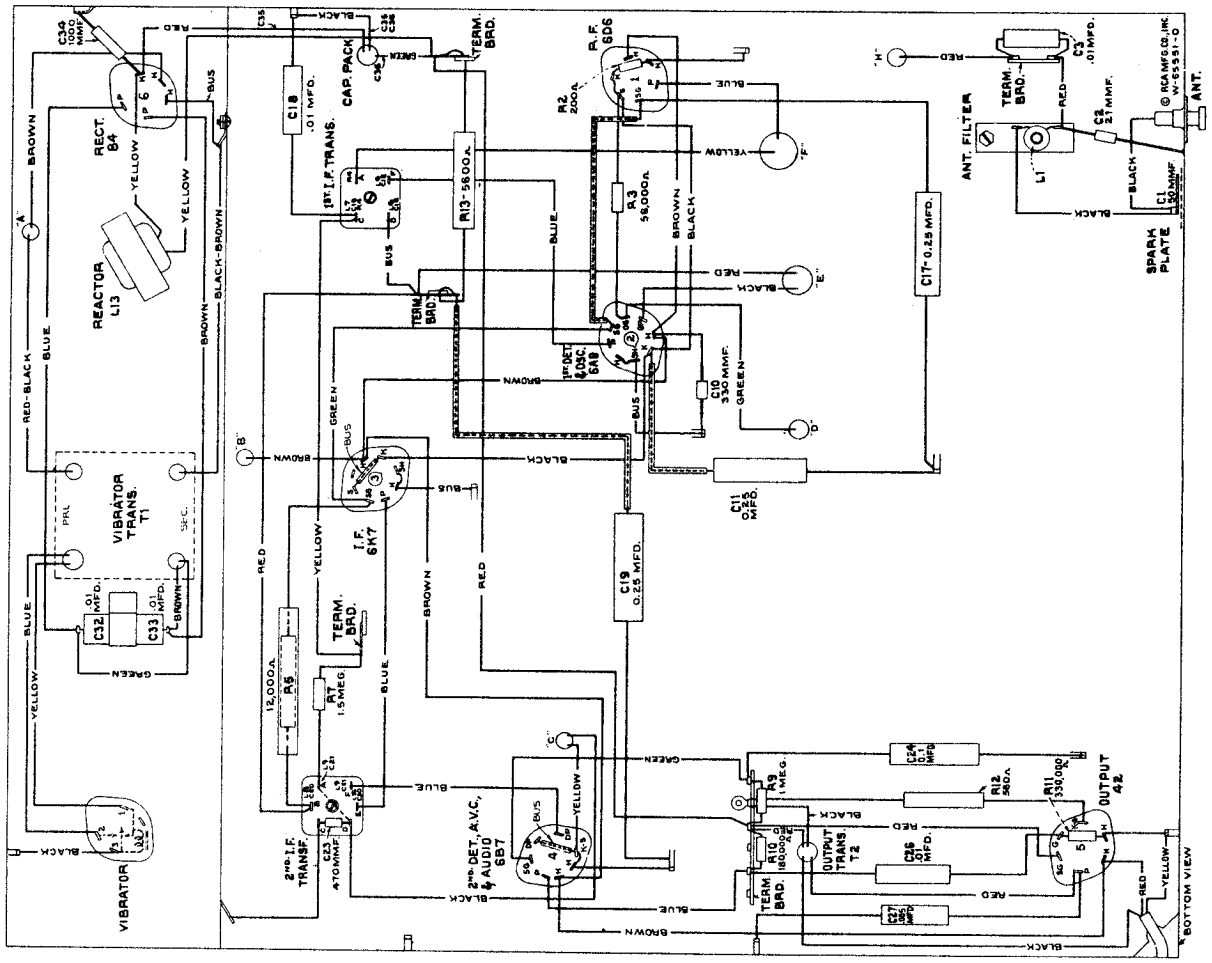

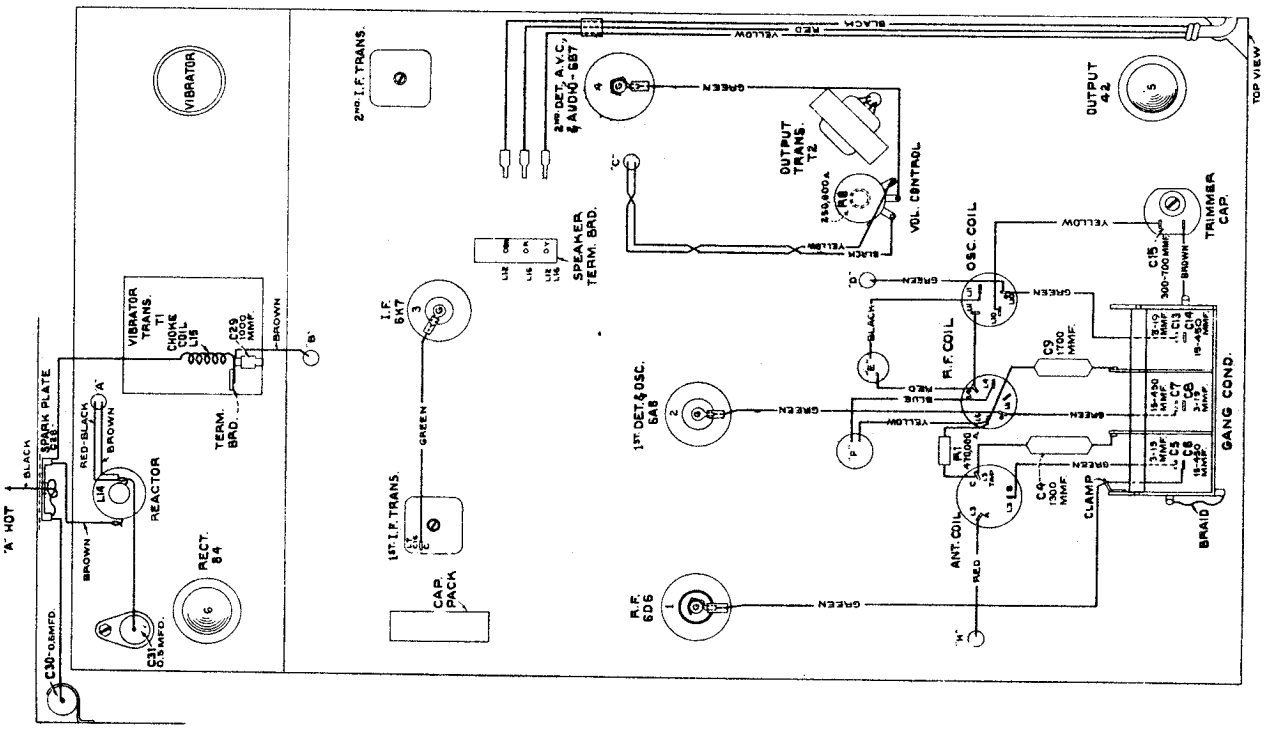

©John F. Rider, Publisher

RCA MFG. CO., INC.

MODELS 67M1, 67M2, 67M3
Schematic, Socket,
Trimmers, Speaker

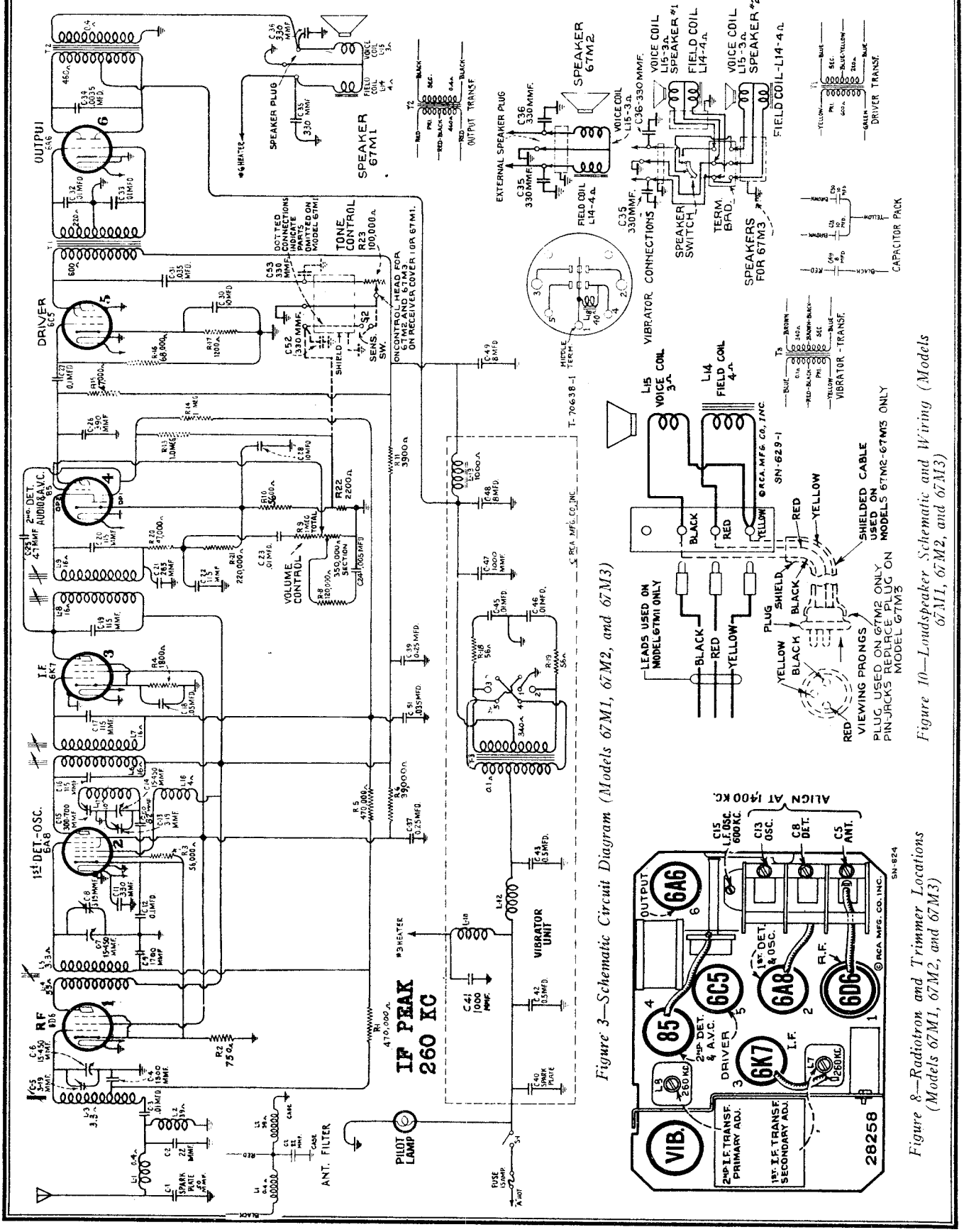

Figure 3—Schematic Circuit Diagram (Models 67M1, 67M2, and 67M3)

Figure 10—Loudspeaker Schematic and Wiring (Models 67M1, 67M2, and 67M3)

Figure 8—Radiotron and Trimmer Locations (Models 67M1, 67M2, and 67M3)

©John F. Rider, Publisher

MODELS 67M1,67M2,67M3
Chassis Wiring
Transf.,Vibrator Conn.

RCA MFG. CO., INC.

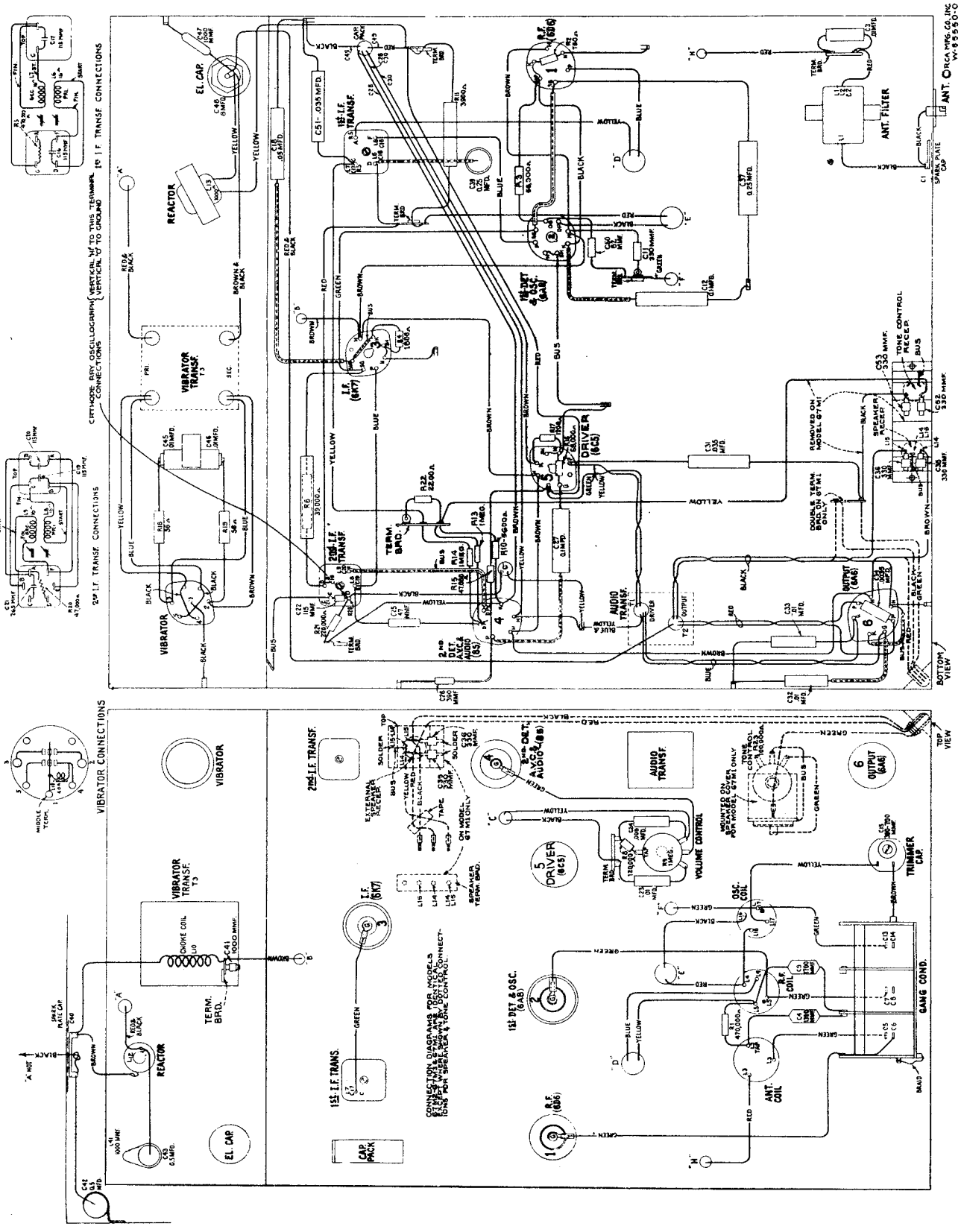

©John F. Rider, Publisher

MODELS 67M1, 67M2, 67M3
Voltage, Alignment
Trimmers

RCA MFG. CO., INC.

MODEL 67M
Voltage, Alignment
Trimmers, Note

NOTE: When installing these receivers in automobiles having high-capacity (400 mmfd. or greater) antennas, the .01 mfd. antenna-coupling capacitor C-3 should be replaced by a 470 mmfd. capacitor, Stock No. 14082. The 1936 models of Chrysler, DeSoto, and Dodge are examples of cars with such antennas.

Service Hint (Model 67M only)

Noise pickup or mushy reception on demonstration or test antennas in the vicinity of a-c circuits may be eliminated by connecting a 5 millihenry r-f choke (Stock No. 12177) between the antenna connector and receiver case. This may be either inside or outside the receiver case.

The synchronous vibrator-rectifier used in Models 67M1, 67M2, and 67M3 has a symmetrical plug-in base so as to give correct output-voltage polarity on an automobile with either positive- or negative-"A" ground. For installation with positive ground, insert vibrator so positive (+) symbol is nearest label on vibrator-compartment partition; for negative-"A" ground, insert with negative (—) symbol nearest chassis.

The interrupter used in Model 67M does not require reversing, since the rectifier tube automatically supplies proper polarity on either polarity ground.

MODELS 67M, 67M1, 67M2, 67M3
ALIGNMENT PROCEDURE

Calibrate the tuning-dial pointer to the low-frequency dial mark as outlined under "Final tuning-dial adjustment."

Perform alignment in proper order tabulated below, starting with No. 1 and following all operations across, then No. 2, etc.

Cathode-ray alignment is preferable; the connections to the chassis are shown on Figures 5 and 6. If an output indicator is used, connect it across the loudspeaker voice-coil and advance the receiver volume control to full-volume position.

Connect the "low" output terminal of the test oscillator to the receiver chassis for all alignment operations. Regulate the output of the test oscillator so that minimum signal is applied to the receiver to obtain an observable output indication. This will avoid a-v-c action. On Models 67M2 and 67M3, the sensitivity control should be placed in its clockwise (maximum sensitivity) position.

If capacitor C-3, in the receiver, has been changed to 470 mmfd., use a "dummy antenna" of .001 mfd. instead of 175 mmfd. for r-f alignment.

The terms "Set end antenna cable" means test oscillator signal should be applied to the receiver at the connector on the short antenna cable extending from the receiver chassis. "Dummy antenna" means the device which must be connected between the "high" test-oscillator output and the point of connection to the receiver in order to obtain ideal alignment. "No signal 550-750 kc." means that the receiver should be tuned to a point between 550 and 750 kc where no signal is received from a station or the local (heterodyne) oscillator.

For further details on alignment, refer to booklet "RCA Victor Receiver Alignment."

Order of Alignment	Test Oscillator: Connection to Receiver	Test Oscillator: Dummy Antenna	Test Oscillator: Frequency Setting	Receiver Dial Setting	Circuit to Adjust	Adjustment Symbols	Adjust to Obtain	Adjustment Location: 67M	Adjustment Location: 67M1, M2, M3
1	6K7 i-f Grid Cap	.001 Mfd.	260 kc	No signal 550-750 kc	2nd i-f Trans.	L9 and L8	Max. (peak)	Figs. 5-7	Figs. 6-8
2	6A8 Det. Grid Cap	.001 Mfd.	260 kc	No signal 550-750 kc	1st i-f Trans.	L7 and L6	Max. (peak)	Figs. 5-7	Figs. 6-8
3	Set End Ant. Cable	175 Mmfd.	600 kc	600 kc	L-F Osc.	C15	Max. (peak)	Fig. 7	Fig. 8
4	Set End Ant. Cable	175 Mmfd.	1,400 kc	1,400 kc	H-F Osc.	C13	Max. (peak)	Fig. 7	Fig. 8
5	Set End Ant. Cable	175 Mmfd.	1,400 kc	1,400 kc	Det.	C8	Max. (peak)	Fig. 7	Fig. 8
6	Set End Ant. Cable	175 Mmfd.	1,400 kc	1,400 kc	Ant.	C5	Max. (peak)	Fig. 7	Fig. 8
7	Set End Ant. Cable	175 Mmfd.	600 kc	Rock thru 600 kc	L-F Osc.	C15	Max. (peak)	Fig. 7	Fig. 8
8	Set End Ant. Cable	175 Mmfd.	1,400 kc	1,400 kc	H-F Osc.	C13	Max. (peak)	Fig. 7	Fig. 8
9	Set End Ant. Cable	175 Mmfd.	1,400 kc	1,400 kc	Det.	C8	Max. (peak)	Fig. 7	Fig. 8
10	Set End Ant. Cable	175 Mmfd.	1,400 kc	1,400 kc	Ant.	C5	Max. (peak)	Fig. 7	Fig. 8

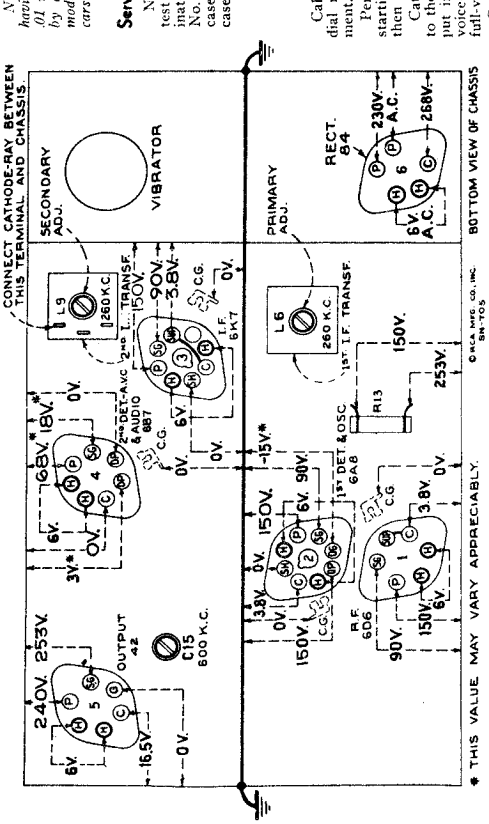

Figure 5—Radiotron Socket Voltages and Trimmer Locations (Model 67M)
(Measured at 6.3 volts battery supply—Volume control minimum—No signal input.)

Figure 6—Radiotron Socket Voltages and Trimmer Locations (Models 67M1, 67M2, and 67M3)
(Measured at 6.3 volts battery supply—Volume control minimum—No signal input—Sensitivity control (Models 67M2 and 67M3) at minimum sensitivity position.)

To duplicate the conditions under which the above voltages were measured requires a 1,000-ohm-per-volt a-c/d-c meter having ranges of 10, 50, 250, and 500 volts. Use the nearest range above the indicated voltage value. Each value should hold within ±20% when the receiver is normally operative at rated battery voltage.

©John F. Rider, Publisher

©John F. Rider, Publisher

Stock No.	DESCRIPTION	List Price
	RECEIVER ASSEMBLIES	
	MODEL 67M ONLY	
13545	Bracket—Chassis mounting bracket and stud assembly	$0.50
12118	Cap—Grid contact cap for glass tubes—Package of 5	.15
12511	Cap—Grid contact cap for metal tubes—Package of 5	.15
13689	Capacitor—Adjustable capacitor (C15)	.50
13700	Capacitor—22 mfd. (C2)	.30
11998	Capacitor—115 Mmfd. (C16, C16, C20, C21)	.28
13432	Capacitor—330 Mmfd. (C10)	.20
12699	Capacitor—470 Mmfd. (C23)	.25
12762	Capacitor—1,000 Mmfd. (C29, C34)	.20
13701	Capacitor—1,500 Mmfd. (C4)	.45
13702	Capacitor—1,700 Mmfd. (C9)	.45
4858	Capacitor—.006 Mfd. (C27)	.20
4858	Capacitor—.01 Mfd. (C3, C18, C26)	.25
4829	Capacitor—0.1 Mfd. (C24)	.30
5019	Capacitor—0.5 Mfd. (C21)	.42
4840	Capacitor—0.25 Mfd. (C11, C17)	.80
12484	Capacitor—0.25 Mfd. (C19)	.24
13687	Capacitor—Pack, comprising one 4 Mfd. and one 6 Mfd. sections (C25, C36)	1.95
13683	Capacitor—Pack, comprising 2 sections each .01 Mfd. (C32, C33)	.65
13685	Coil—Antenna coil and shield (L3)	1.10
12233	Coil—Choke coil (L14)	.50
12228	Coil—Oscillator coil less shield (L10, L11)	.80
12684	Coil—R. F. coil less shield (L4, L5)	1.10
13371	Condenser—3-gang variable tuning condenser (C5, C6, C7, C8, C13, C14)	4.85
12006	Core—Adjustable core and stud for Stock Nos. 13419 and 13693	$0.32
12168	Coupling—Station selector flexible shaft coupling	.45
13691	Filter—Antenna filter (L1)	.45
13372	Gear—Large gear located on tuning condenser shaft	.35
13373	Gear—Worm gear for tuning condenser	.65
13694	Guide—Volume control shaft guide	.15
12485	Pin—Contact pin for speaker leads—Package of 5	.15
13686	Reactor—Filter reactor, iron core (L13)	.75
13697	Resistor—200 ohms, insulated, ¼ watt—Package of 5 (R12)	1.00
11845	Resistor—560 ohms, carbon type, 1 watt—Package of 5 (R12)	1.10
8697	Resistor—5,600 ohms, carbon type, 2 watts (R13)	.25
3066	Resistor—12,000 ohms, carbon type, 1 watt—Package of 5 (R5)	1.10
12286	Resistor—56,000 ohms, insulated, ¼ watt—Package of 5 (R7)	1.00
13698	Resistor—180,000 ohms, insulated, ¼ watt—Package of 5 (R10)	1.00
12435	Resistor—300,000 ohms, insulated, ½ watt—Package of 5 (M11)	1.00
12285	Resistor—470,000 ohms, insulated, ¼ watt—Package of 5 (R6)	1.00
11452	Resistor—470,000 ohms, carbon type, 1/10 watt—Package of 5 (R4)	.75
13290	Resistor—1 megohm, insulated, ¼ watt—Package of 5 (R9)	1.00
12287	Resistor—1.5 megohms, insulated, ¼ watt—Package of 5 (R7)	$1.00
5129	Ring—Radiotron shield ring—Package of 5	.10
3584	Ring—Retaining ring for R. F. or oscillator coil—Package of 5	.40
3623	Shield—R. F. or oscillator coil shield	.30
12218	Shield—Radiotron shield	.15
12008	Shield—Transformer shield for Stock Nos. 13419 and 13693	.28
4814	Socket—5-contact 84 Radiotron socket	.15
4786	Socket—6-contact 6D6 or 42 Radiotron socket	.15
4787	Socket—7-contact 6H7 Radiotron socket	.15
12227	Socket—8-contact 6A8 or 6K7 Radiotron socket	.18
12686	Socket—Vibrator socket	.20
12007	Spring—Retaining spring for core, Stock No. 12006—Package of 10	.36
13419	Transformer—First I. F. transformer (L6, L7, C15, C16, R4)	2.25
13693	Transformer—Second I. F. transformer (L8, L9, C20, C21)	2.05
13692	Transformer—Output transformer (T2)	.90
13690	Transformer—Vibrator transformer (T1)	3.80
13694	Vibrator—Complete (L17)	3.35
13420	Volume control (R8)	1.90
	CONTROL BOX AND FLEXIBLE SHAFT ASSEMBLIES	
	MODELS 67M AND 67M1 ONLY	
13719	Box—Control box, tuning section only, less knob, flexible shaft and dial scale	$4.19
13720	Box—Control box, volume control shaft and switch section only, less knob and flexible shaft	2.90
13718	Dial—Station selector dial	.70
11765	Lamp—Control box dial lamp—Package of 5	1.15
13925	Shaft—Tuning control flexible shaft, approximately 24½ inches long	1.20
13926	Shaft—Volume control flexible shaft, approximately 24⅝ inches long	1.20

Note No. 1—Knobs, escutcheon, and mounting parts are included in kits to be supplied by dealer for particular car in which installation is to be made.

Note No. 2—If complete control box only is required, order one each of Stock No. 13719 and Stock No. 13720.

Stock No.	DESCRIPTION	List Price
	RECEIVER ASSEMBLIES	
	MODELS 67M1, 67M2, AND 67M3 ONLY	
13689	Bracket—Chassis mounting bracket and stud assembly (67M2, 67M3 only)	.45
13543	Bracket—Chassis mounting bracket and stud assembly (67M1 only)	.50
12118	Cap—Grid contact cap for glass tubes—Package of 5	.15
12511	Cap—Grid contact cap for metal tubes—Package of 5	.15
13689	Capacitor—Adjustable capacitor (C15)	.50
13141	Capacitor—47 Mmfd. (C25)	.23
12813	Capacitor—82 Mmfd. (C30)	.20
13433	Capacitor—115 Mmfd. (C22)	.20
11998	Capacitor—115 Mmfd. (C16, C17, C19, C20)	.28
12761	Capacitor—285 Mmfd. (C21)	.15
13432	Capacitor—330 Mmfd. (C11, C35, C36, C52, C53) (C52, C53 used in 67M2 and 67M3 only)	.20
12764	Capacitor—390 Mmfd. (C26)	.25
12762	Capacitor—1,000 Mmfd. (C41, C47)	.20
12761	Capacitor—1,300 Mmfd. (C4)	.45
13717	Capacitor—1,700 Mmfd. (C9)	.45
5005	Capacitor—.0035 Mfd. (C34)	.16
4858	Capacitor—.005 Mfd. (C24)	.20
5196	Capacitor—.035 Mfd. (C31, C51)	.18
4858	Capacitor—.01 Mfd. (C3, C23, C32, C33)	.25
4856	Capacitor—.05 Mfd. (C18)	.30
11414	Capacitor—0.1 Mfd. (C27)	.20
4841	Capacitor—0.1 Mfd. (C12)	.22
5019	Capacitor—0.5 Mfd. (C43)	.42
12237	Capacitor—0.25 Mfd. (C29)	1.02
12484	Capacitor—0.25 Mfd. (C37)	.24
12234	Capacitor—8 Mfd. (C48)	1.34
12238	Capacitor pack—Comprising one 8 Mfd. and two 10 Mfd. sections (C38, C39, C49)	2.39
13695	Capacitor pack—Comprising two sections each .01 Mfd. (C45, C46)	.65
13685	Coil—Antenna coil and shield (L3)	1.10
12235	Coil—Choke coil (L42)	.50
12225	Coil—Oscillator coil less shield (L16, L17)	.80
12712	Coil—R. F. coil and shield (L4, L5)	1.65
13371	Condenser—3-gang variable tuning condenser (C5, C6, C7, C8, C13, C14)	4.85
12006	Core—Adjustable core and stud for Stock Nos. 12229 and 13419	.22
12168	Coupling—Tuning control flexible shaft coupling	.20
12239	Filter—Antenna filter (L1, L2, C2)	1.28
13372	Gear—Large drive gear for tuning condenser shaft	.55
13373	Gear—Worm gear and mounting bracket for tuning condenser	.65
13694	Guide—Volume control flexible shaft guide	.15
12482	Pin—Contact pin for speaker leads—Package of 5 (67M1 only)	.15
12485	Pin—Contact pin for tone control lead—Package of 5 (67M1 only)	.15
13111	Reactor—Filter reactor (L13)	1.30
5034	Resistor—56 ohms, carbon type, ½ watt—Package of 5 (R18, R19)	1.00
13712	Resistor—750 ohms, insulated, ¼ watt—Package of 5 (R2)	1.00
12267	Resistor—1,200 ohms, insulated, ¼ watt—Package of 5 (R17)	1.00
12194	Resistor—1,800 ohms, insulated, ¼ watt—Package of 5 (R4)	1.00
13716	Resistor—2,200 ohms, insulated, ¼ watt—Package of 5 (R23)	1.00
12229	Resistor—3,000 ohms, carbon type, 2 watts (R11)	.25
13714	Resistor—5,600 ohms, insulated, ¼ watt—Package of 5 (R10)	$1.00
5176	Resistor—39,000 ohms, carbon type, 1 watt (R6)	.22
5131	Resistor—47,000 ohms, carbon type, 1/10 watt—Package of 5 (R20)	.75
12412	Resistor—47,000 ohms, insulated, ¼ watt—Package of 5 (R15)	1.00
12285	Resistor—56,000 ohms, insulated, ¼ watt—Package of 5 (R3)	1.00
12200	Resistor—1 megohm, insulated, ¼ watt—Package of 5 (R13, R14)	1.00
5129	Ring—Radiotron shield ring—Package of 5	.10
3584	Ring—Retaining ring for oscillator coil—Package of 5	.40
12008	Shield—I. F. transformer shield for Stock Nos. 12229 and 13419	.28
3623	Shield—Oscillator coil shield	.30
12218	Shield—Radiotron shield	.15
4786	Socket—6-contact 6D6 or 85 Radiotron socket	.15
12241	Socket—6-contact vibrator socket	.18
12243	Socket—7-contact 6A6 Radiotron socket	.18
12227	Socket—8-contact 6A8, 6C5, or 6K7 Radiotron socket	.18
12007	Spring—Retaining spring for core, Stock No. 12006—Package of 10	.36
12230	Transformer—Audio transformer pack comprising driver and output transformers (T1, T2)	2.95
13419	Transformer—First I. F. transformer (L6, L7, C16, C17, R5)	2.25
12229	Transformer—Second I. F. transformer (L8, L9, C19, C20, C21, R20)	2.02
12231	Transformer—Vibrator transformer (T3)	3.42
12236	Vibrator—Complete (L18)	4.55
13711	Volume control (R9)	1.50

Stock No.	DESCRIPTION	List Price
	REPRODUCER ASSEMBLIES	
	MODEL 67M ONLY	
13703	Cone—Reproducer cone and dust cap (L12)	1.95
9772	Reproducer complete Note No. 1—Field coil (L16) cannot be replaced separately.	4.20
	REPRODUCER ASSEMBLIES	
	MODEL 67M1 ONLY	
12482	Board—Reproducer terminal board	.30
12450	Coil—Field coil (L14)	1.60
12451	Cone—Reproducer cone complete (L15)	1.60
9687	Reproducer—Reproducer complete	5.65
	REPRODUCER ASSEMBLIES	
	DASH SPEAKER	
	MODELS 67M2 AND 67M3 ONLY	
13794	Cable—3-conductor shielded reproducer cable, approximately 18 inches long, complete with 3-contact male connector (67M2 only)	1.00
13798	Cable—3-conductor shielded reproducer cable, approximately 24 inches long, complete with 3-contact pins (67M3 only)	1.00
13793	Coil—Reproducer field coil (L14)	2.25
13796	Cone—Reproducer cone and dust cap (L15)	1.00
11984	Connector—3-contact male connector for reproducer cable (67M2 only)	.22
13793	Housing—Reproducer housing complete, less speaker unit and cable	4.15
9774	Reproducer—Speaker unit only, less case, cable and mounting parts	7.65
13797	Screw—Reproducer housing screw—Package of 5	.25
	REPRODUCER ASSEMBLIES	
	HEADER SPEAKER	
	MODEL 67M3 ONLY	
9705	Clip—Spring clip used to hold speaker unit in baffle pan—Package of 3	.15
9708	Cone—Reproducer cone and dust cap (L15)	1.90
9775	Reproducer—Speaker unit only, less trimmer ring, baffle pan and grille cloth, and cable	3.00
9701	Ring—Trimmer ring with baffle pan and grille cloth	1.50
9706	Screw—Mounting screw used to fasten speaker unit in car—Package of 2	.12
9709	Screen—Wire screen for speaker unit	.25
9707	Nut—Wing nut used to fasten speaker unit in car—Package of 2	.18
	CONTROL BOX AND FLEXIBLE SHAFT ASSEMBLIES	
	MODELS 67M2 AND 67M3 ONLY	
13790	Box—Control box, tuning and sensitivity switch section only, less tuning control knob and dial scale	6.35
13791	Box—Control box, volume control, tone control and operating switch section, less volume control knob	3.90
13792	Cable—3-conductor shielded sensitivity and tone control cable, approximately 26 inches long, complete with 4-contact male connector	2.05
13718	Dial—Station selector dial scale	.70
11765	Lamp—Dial lamp—Package of 5	1.15
13925	Shaft—Tuning control flexible shaft, approximately 24½ inches long	1.20
13926	Shaft—Volume control flexible shaft, approximately 24⅝ inches long Note No. 1—Knobs, escutcheons, and mounting parts are included in kits to be supplied by dealer for particular car in which installation is to be made. Note No. 2—If complete control box only is required, order one each of Stock Nos. 13790 and 13791.	1.20
	MISCELLANEOUS ASSEMBLIES	
	ALL MODELS	
4289	Body—"A" lead fuse connector female body—Package of 10	.35
13724	Button—Plug button to cover external speaker socket in receiver housing (67M1 only)	.15
13708	Cable—Shielded antenna lead-in, approximately 36 inches long, complete with 2 male connectors	1.15
13809	Cable—3-conductor shielded speaker switch cable, approximately 22 inches long, complete with 3-contact male connector (for Model 67M3 only)	1.00
13810	Cable—3-conductor shielded reproducer cable, approximately 90 inches long, complete with contact pins, for header speaker in Model 67M3 only	2.00
4288	Cap—Male connector cap for "A" lead—Package of 10	.36
4203	Capacitor—Ammeter capacitor	.60
5095	Capacitor—Generator capacitor	.40
13109	Capacitor—0.5 Mfd. (C12 for 67M1, 67M2, 67M3 only) (C30 for 67M only)	.76

Stock No.	DESCRIPTION	List Price
4291	Clip—"A" lead ammeter clip—Package of 10	$0.72
13710	Connector—Antenna lead connector assembly located on receiver housing	.15
13705	Cover—Receiver housing top cover, less speaker grille (67M only)	.75
13723	Cover—Receiver housing top cover, less speaker grille (67M1 only)	.75
13802	Cover—Receiver housing top cover (67M2 and 67M3 only)	.78
13706	Cover—Receiver housing bottom cover (67M and 67M1 only)	.85
13803	Cover—Receiver housing bottom cover (67M2 and 67M3 only)	.85
13808	Escutcheon—Speaker switch escutcheon for Model 67M3 only	.35
13707	Fastener—Receiver housing top cover fastener—Package of 10	.30
4286	Ferrule—Ferrule and bushing for "A" lead connector—Package of 10	.38
5023	Fuse—"A" lead fuse, 15 amp.—Package of 5	.40
13709	Grille—Speaker grille assembly (67M only)	1.20
13725	Grille—Speaker grille less screen (67M1 only)	.90
13704	Housing—Receiver housing complete less speaker grille (67M only)	6.55
13722	Housing—Receiver housing complete less speaker grille (67M1 only)	6.80
13801	Housing—Receiver housing complete (67M2 and 67M3 only)	6.55
4290	Insulator—Fuse connector insulating sleeve—Package of 10	.35
13727	Knob—Tone control knob—Package of 5 (67M1 only)	.75
4325	Knob—Speaker switch knob for Model 67M3 only—Package of 5	1.00
12445	Lead—"A" lead (set end), approximately 8 inches long, complete with section of connector	.26
7766	Lead—"A" lead (ammeter end) complete with section of fuse connector and ammeter clip	.30
13721	Plate—Receiver nameplate and mounting screws (67M1 only)	.20
13805	Plate—RCA monogram for receiver housing (67M2 and 67M3 only)	.65
13806	Ring—Rubber ring for dash speaker mounting (67M2 and 67M3 only)	.45
13726	Screen—Speaker grille cloth and screen (67M1 only)	.80
12252	Screw—No. 8 self-tapping, hex head screw, used on receiver housing—Package of 10	.20
12447	Screw—Speaker mounting screw assembly, comprising one screw, one lockwasher, and one nut—Package of 4 (67M only)	.26
12248	Socket—3-contact socket and bracket assembly for external speaker (67M1 only)	.20
12502	Socket—Pin-type socket and bracket for tone control lead (67M1 only)	.30
13804	Socket—Socket and bracket assembly, comprising one 3-contact socket for reproducer cable and one 4-contact socket for tone and sensitivity cable, both mounted on supporting bracket (67M2 and 67M3 only)	.45
4284	Spring—Tension spring for "A" lead connector—Package of 10	.30
12448	Stud—Receiver mounting stud assembly, comprising one stud, one washer, one lockwasher, one nut	.20
12254	Stud—Dash speaker mounting stud assembly, comprising one stud, one spacer, two lockwashers and one nut (67M2 and 67M3 only)	.24
5024	Suppressor—Distributor suppressor	.38
13807	Switch—Dash mounting speaker switch and bracket assembly, less knob and cable (67M3 only)	1.75
12249	Tone control (R22) (67M1 only)	.68
4285	Washer—Insulating washer for "A" lead connector—Package of 10	.22

Prices quoted above are subject to change without notice.

RCA MFG. CO., INC.

MODEL 84BT
Schematic, Socket
Trimmers, Chassis Wiring

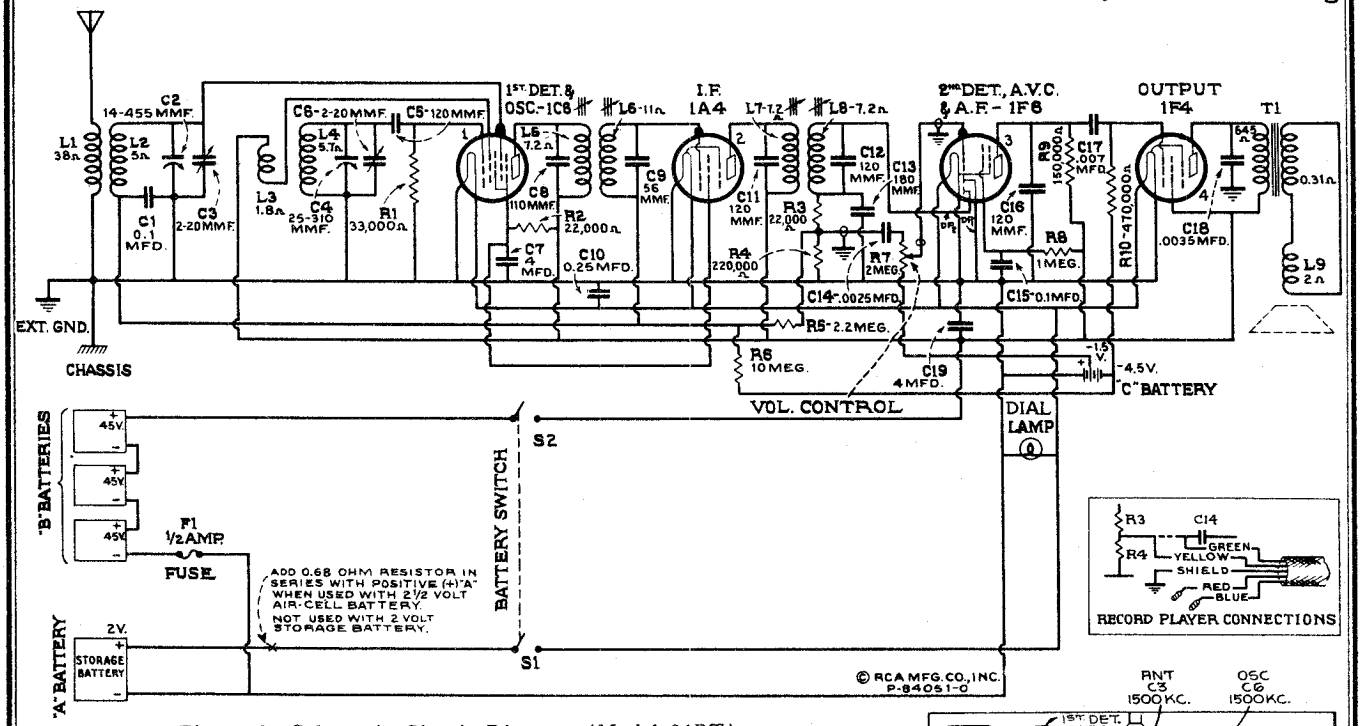

Figure 3—Schematic Circuit Diagram (Model 84BT)

IF PEAK 460 KC

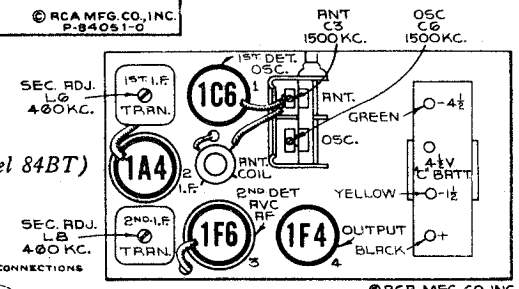

Figure 1—Radiotron and Trimmer Locations (Model 84BT)

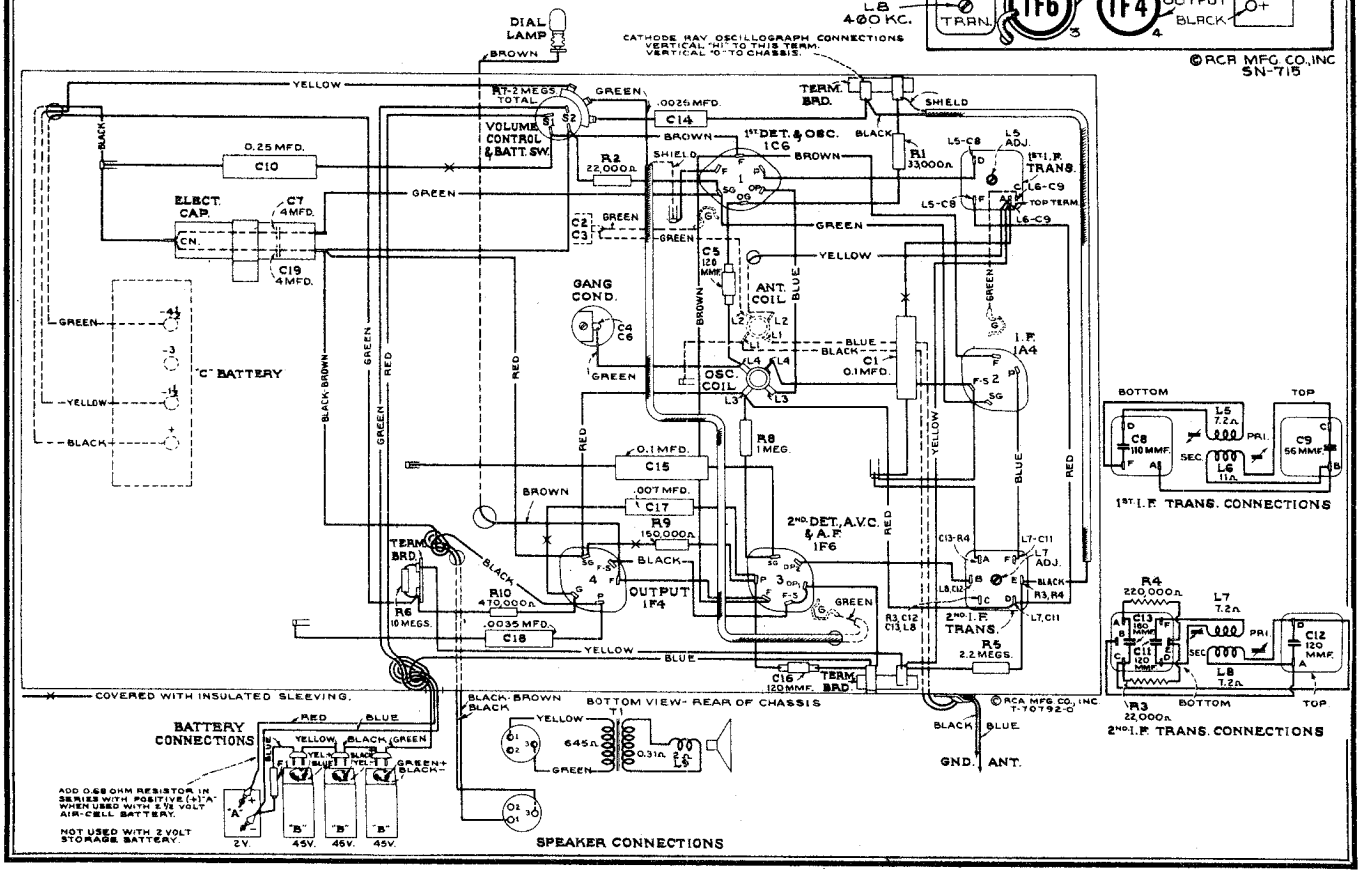

©John F. Rider, Publisher

MODEL 84BT6
Schematic, Socket
Trimmers, Chassis Wiring

RCA MFG. CO., INC.

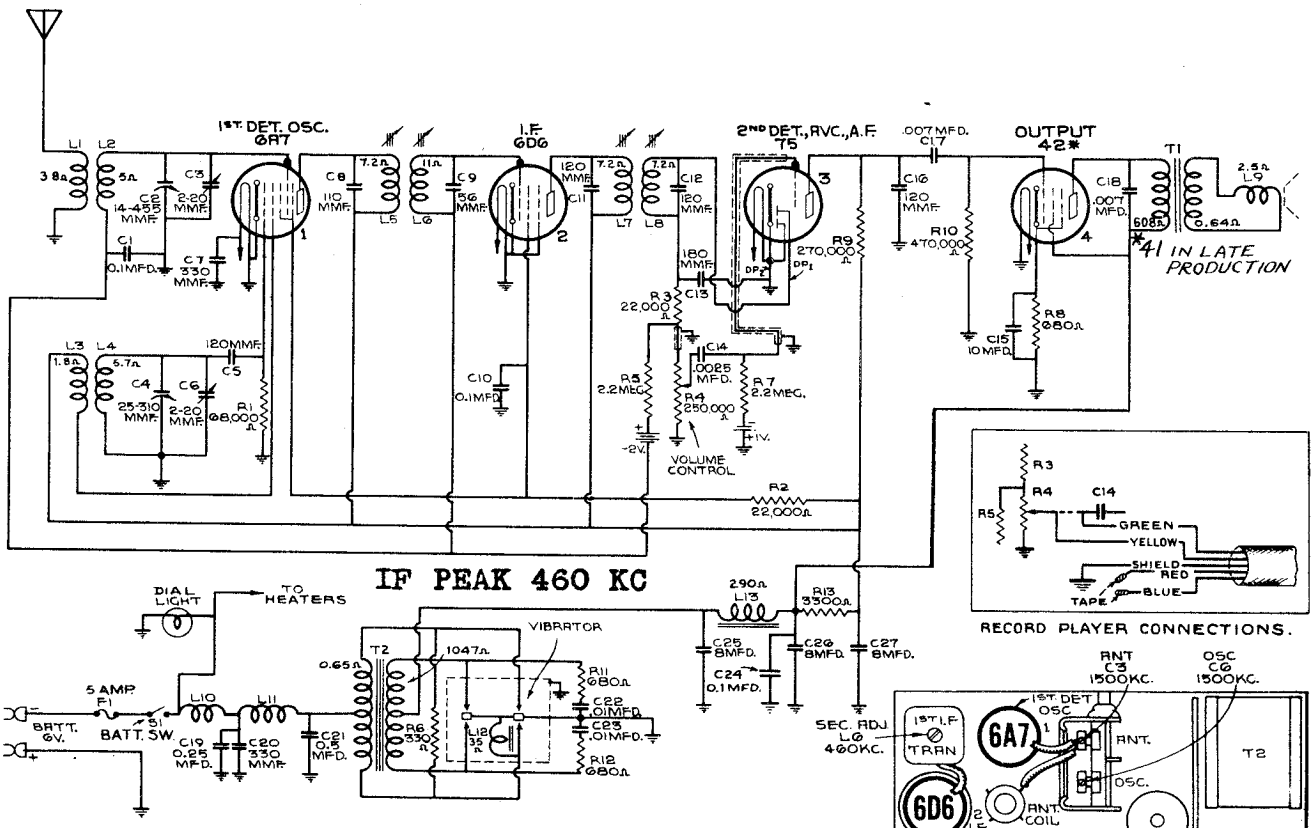

RECORD PLAYER CONNECTIONS.

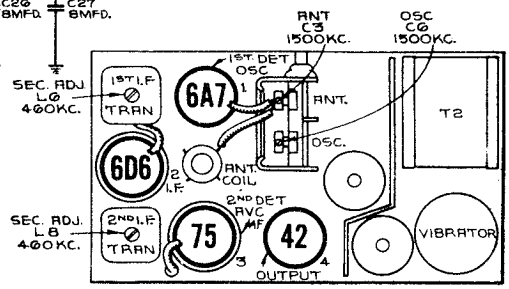

© RCA MFG. CO., INC. SN-716

Figure 5—Schematic Circuit Diagram (Model 84BT6)

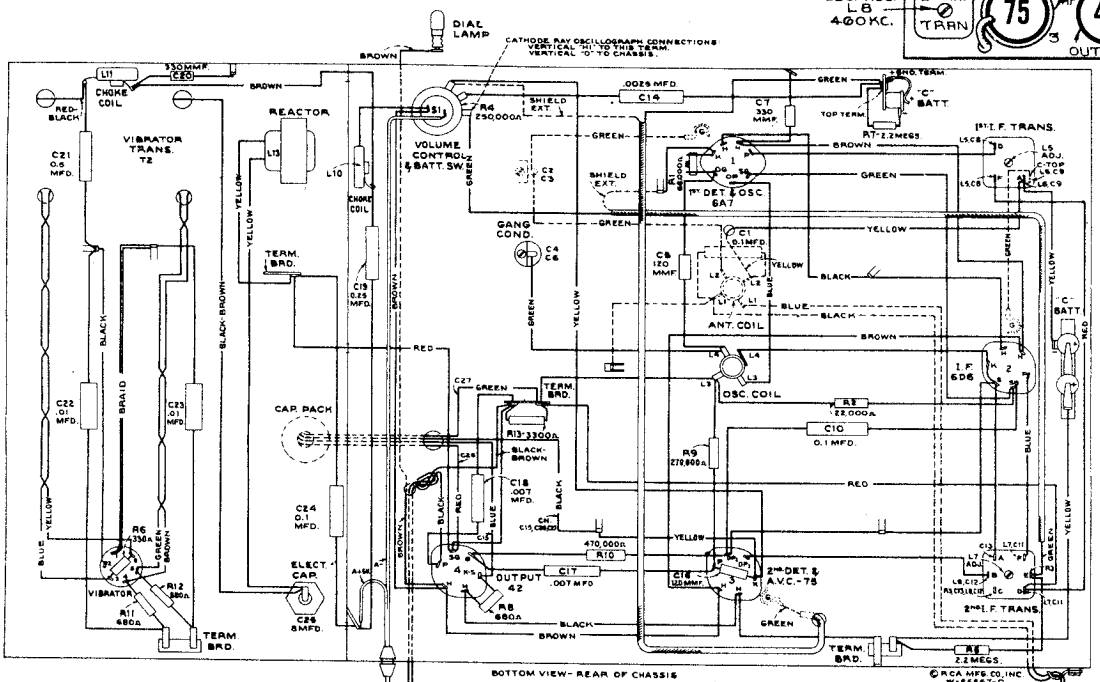

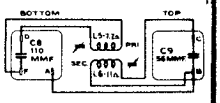

1ST I.F. TRANS. CONNECTIONS

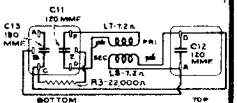

2ND I.F. TRANS. CONNECTIONS

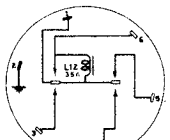

VIB. CONNECTIONS
BOTTOM VIEW

Figure 6—Chassis Wiring Diagram (Model 84BT6)

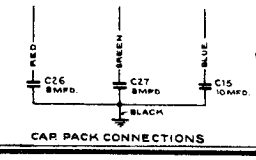

CAP PACK CONNECTIONS

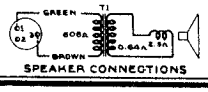

SPEAKER CONNECTIONS

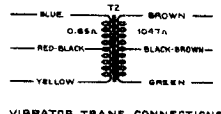

VIBRATOR TRANS. CONNECTIONS

©John F. Rider, Publisher

RCA MFG. CO., INC.

Order of Alignment	Test Oscillator: Connection to Receiver	Test Oscillator: Dummy Antenna	Test Oscillator: Frequency Setting	Receiver Dial Setting	Circuit to Adjust	Adjustment Symbols	Adjust to Obtain
1	I-F Amp. Grid Cap	.001 Mfd.	460 kc	No Signal 550-750 kc	2nd I-F Trans.	L7 and L8	Max. (peak)
2	1st Det. -Osc. Grid Cap	.001 Mfd.	460 kc	No Signal 550-750 kc	1st I-F Trans.	L5 and L6	Max. (peak)
3	Ant. Lead	200 Mmfd.	1,500 kc	1,500 kc	"A" Osc.	C6*	Max. (peak)
4	Ant. Lead	200 Mmfd.	1,500 kc	1,500 kc	"A" Ant.	C3	Max. (peak)

* C6 is in two sections. Tighten section on bottom of gang (under chassis) for maximum capacity before adjusting top section.

Loudspeaker.—Centering of the loudspeaker is made in the usual manner with three narrow paper feelers after first removing the front dust cover. This may be removed by softening its cement with a light application of acetone, using care not to allow the acetone to flow into the air gap. The dust cover should be cemented back in place with ambroid upon completion of adjustment.

Bias Cells (Model 84BT6 only).—The bias cells are used only for the purpose of supplying bias potential and should never be measured with an ordinary voltmeter or other device which draws any current. A simple check on the cells may be made by connecting a milliammeter in the plate circuit of the tubes biased by these cells (6A7 or 6D6, 2 cells; 75, 1 cell). Measure the plate current with the cells in the circuit, then carefully remove the cells and substitute a voltage equivalent to the rated cell voltage. If the first reading obtained (with bias cells) is more than 40% from the latter reading (with known voltage), the bias cells should be replaced. This 40% difference is equivalent to a change of approximately 25% battery voltage.

Precautionary Lead Dress (Model 84BT6 only).—(1) Green lead from antenna coil to antenna section of tuning condenser should be dressed as far as possible from tube No. 1 (6A7). (2) Dress brown and green twisted leads (vibrator transformer T2 to vibrator socket) under capacitor C21. (3) Dress brown-black lead (T2 to C25) away from red lead which connects terminal in vibrator compartment to "SG" of tube No. 4 (42). (4) Keep all other leads in vibrator compartment as close to chassis base as possible.

Synchronous Vibrator—Rectifier (Model 84BT6 only).—The synchronous vibrator—rectifier used in the power system is constructed with a plug-in base so as to be easily removed or replaced after first removing the two nuts holding the shield can in place. Its adjustments have been accurately made during manufacture by means of special equipment. In cases of excessive interference or otherwise faulty operation, a renewal should be installed.

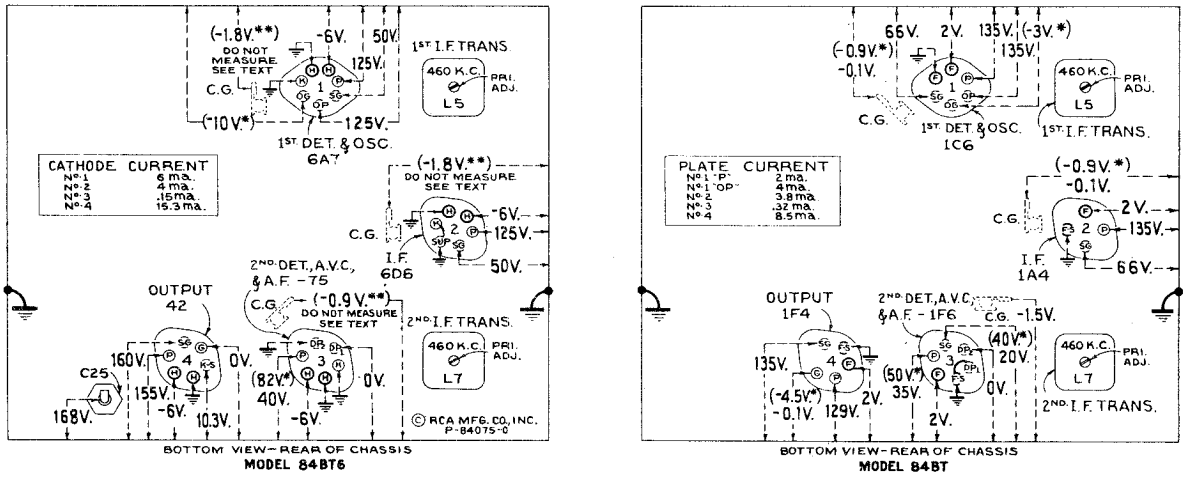

Figure 7—Radiotron Socket Voltages, Coil, and Trimmer Locations

Measured with all batteries at normal voltage—Tuned to approximately 1,000 kc—No signal being received—Volume control optional

Note: Two voltage values are shown for some readings. The higher value shown in parenthesis with asterisk (*) indicates operating conditions without voltmeter loading. The lower value is the actual measured voltage and differs from the higher value because of the additional loading of the voltmeter through the high series circuit resistance.

***CAUTION: Do not attempt to measure voltages on control grids of the 6A7, 6D6, or 75, with any conventional voltmeter due to presence of bias cells.*

©John F. Rider, Publisher

MODELS 84BT,84BT6
Specifications,Parts

RCA MFG. CO., INC.

Frequency Range..... 530—1,720 kc
Alignment Frequency..... 1,500 kc (osc., ant.)
Intermediate Frequency..... 460 kc

Radiotron Complement (Model 84BT)	(Model 84BT6)
(1) RCA-1C6..... First Detector—Oscillator	(1) RCA-6A7..... First Detector—Oscillator
(2) RCA-1A4..... Intermediate Amplifier	(2) RCA-6D6..... Intermediate Amplifier
(3) RCA-1F6..... Second Det., A-F Amp., and A.V.C.	(3) RCA-75..... Second Det., A-F Amp., and A.V.C.
(4) RCA-1F4..... Power Output	(4) RCA-42..... Power Output

Pilot Lamp..... 84BT, (1) Mazda 2.0 volts, .06 amp.; 84BT6, (1) Mazda No. 40, 6.3 volts, 0.15 amp.

Batteries Required

84BT...."A", one plug-in, 2½-volt Air Cell, or one 2-volt storage battery; "B", three 45-volt, heavy-duty, plug-in type B batteries; "C", one 4½-volt C battery tapped at 1½ volts.

84BT6..."A", one 6-volt storage battery; "B", none required; "C", three bias cells (Stock No. 12681).

Current Consumption	Model 84BT	Model 84BT6
"A" at 2 volts	0.42 ampere	
"A" at 6 volts		2.95 amperes
"B" at 135 volts	25 ma	(Supplied from vibrator)
Fuse Rating	½ amp	5 amps.

Power Output		
Undistorted	0.3 watt	0.5 watt
Maximum	0.5 watt	0.8 watt

Loudspeaker

Type: permanent-magnet dynamic Diameter: 6 inches Voice coil impedance: 2¼ ohms at 400 cycles.

STOCK No.	DESCRIPTION
	RECEIVER ASSEMBLIES
4289	Body—Fuse connector body (Model 84BT6 only)
14286	Bracket—Dial lamp bracket
14288	Cable—3-conductor battery cable approximately 60 inches long, complete with fuse and battery clips (Model 84BT only)
12607	Cap—First I-F transformer shield cap
12581	Cap—Second I-F transformer shield cap
12118	Cap—Grid contact cap
4288	Cap—Fuse connector male cap (Model 84BT6 only)
11654	Capacitor—.01 Mfd. (C22, C23) (Model 84BT6 only)
4841	Capacitor—0.1 Mfd. (Model 84BT, C1, C15) (Model 84BT6, C1, C10, C24)
4840	Capacitor—0.25 Mfd. (Model 84BT, C10) (Model 84BT6, C19)
12741	Capacitor—0.5 Mfd. (C21) (Model 84BT6 only)
14287	Capacitor—Pack comprising two sections each 4 Mfd. (C7, C19) (Model 84BT only)
13046	Capacitor—8 Mfd. (C25) (Model 84BT6 only)
14310	Capacitor Pack—Comprising one 10 Mfd. and two 8 Mfd. sections (C15, C26, C27) (Model 84BT6 only)
12681	Cell—Bias cell (Model 84BT6 only)
14289	Clip—2 battery clips, one marked "+" and one unmarked
14285	Coil—Antenna coil (L1, L2)
14257	Coil—Oscillator coil (L3, L4)
12179	Coil—Vibrator choke coil (L10, L11) (Model 84BT6 only)
14256	Condenser—2-gang variable tuning condenser (C2, C3, C4, C6)
5119	Connector—3-contact female connector for speaker cable
14314	Cord—Power cord complete with fuse and clips (Model 84BT6 only)
12006	Core—Adjustable core and stud for first or second I-F transformers
14264	Dial—Station selector dial and holder assembly
4286	Ferrule—Fuse connector ferrule and bushing (Model 84BT6 only)
3748	Fuse—½ ampere (F1) (Model 84BT only)
5140	Fuse—5 ampere (F1) (Model 84BT6 only)
14316	Holder—Bias cell holder (2 cells) (Model 84BT6 only)
14319	Holder—Bias cell holder (1 cell) (Model 84BT6 only)
14263	Indicator—Station selector indicator pointer
4290	Insulator—Fuse connector body insulator (Model 84BT6 only)
4348	Lamp—Dial lamp (Model 84BT only)
4340	Lamp—Dial lamp (Model 84BT6 only)
14313	Mounting — Vibrator socket mounting comprising 2 rubber washers, 2 screws, 2 eyelets, 2 washers, 2 lockwashers, and 2 nuts (Model 84BT6 only)
12818	Reactor—Filter reactor (L13) (Model 84BT6 only)
8063	Resistor—330 ohms, carbon type, ½ watt (R6) (Model 84BT6 only)
5031	Resistor—680 ohms, carbon type, ½ watt (R8, R11, R12) (Model 84BT6 only)
12330	Resistor—3,300 ohms, carbon type, ½ watt (R13) (Model 84BT6 only)
11305	Resistor—22,000 ohms, carbon type, ½ watt (R2)
14284	Resistor—22,000 ohms, carbon type, 1/10 watt (R3)
11364	Resistor—33,000 ohms, carbon type, ½ watt (R1) (Model 84BT only)
12333	Resistor—68,000 ohms, carbon type, ½ watt (R1) (Model 84BT6 only)
5023	Resistor—150,000 ohms, carbon type, ½ watt (R9) (Model 84BT only)
11398	Resistor—220,000 ohms, carbon type, 1/10 watt (R4) (Model 84BT only)
11323	Resistor—270,000 ohms, carbon type, ½ watt (R9)
11172	Resistor—470,000 ohms, carbon type, ½ watt (R10)
3033	Resistor—1 megohm, carbon type, ½ watt (R8) (Model 84BT only)
11626	Resistor—2.2 megohms, carbon type, ½ watt (Model 84BT, R5) (Model 84BT6, R5, R7)
4629	Cap—Radiotron shield cap
12629	Capacitor—56 Mmfd. (C9)
14262	Capacitor—110 Mmfd. (C8)
12404	Capacitor—120 Mmfd. (C11, C12)
12724	Capacitor—120 Mmfd. (C5, C16)
12406	Capacitor—180 Mmfd. (C13)
14320	Capacitor—330 Mmfd. (C7, C20) (Model 84BT6 only)
5107	Capacitor—.0025 Mfd. (C14)
5005	Capacitor—.0035 Mfd. (C18) (Model 84BT only)
5148	Capacitor—.007 Mfd. (C17) (Model 84BT only)
5196	Capacitor—.007 Mfd. (C17, C18) (Model 84BT6 only)
13673	Resistor—10 megohms, carbon type, ½ watt (R6) (Model 84BT only)
14315	Shield—Chassis end shield complete with bias cell holder —For end opposite vibrator (Model 84BT6 only)
14318	Shield—Chassis end and bottom shield for vibrator end of chassis (Model 84BT6 only)
12008	Shield—First or second I-F transformer shield can
14317	Shield—Vibrator shield can (Model 84BT6 only)
3682	Shield—1A4, 1F6, 6D6, or 75 Radiotron shield
14114	Socket—Dial lamp socket
4794	Socket—4-contact 1A4 Radiotron socket (Model 84BT only)
4814	Socket—5-contact 1F4 Radiotron socket (Model 84BT only)
4786	Socket—6-contact 1C6, 1F6, 6D6, 42, or 75 Radiotron socket
14312	Socket—6-contact vibrator socket, less rubber mounting (Model 84BT6 only)
4787	Socket—7-contact 6A7 Radiotron socket (Model 84BT6 only)
4284	Spring—Fuse connector spring (Model 84BT6 only)
12007	Spring—Retaining spring for core Stock No. 12006
14261	Transformer—First I-F transformer (L5, L6, C8, C9)
14283	Transformer—Second I-F transformer (L7, L8, C11, C12, C13, R3, R4) (Model 84BT only)
14308	Transformer—Second I-F transformer (L7, L8, C11, C12, C13, R4) (Model 84BT6 only)
14311	Transformer—Vibrator transformer (T2) (Model 84BT6 only)
14309	Vibrator complete (L12) (Model 84BT6 only)
14282	Volume control and power switch (R7, S1) (Model 84BT only)
14307	Volume control and power switch (R4, S1) (Model 84BT6 only)
4285	Washer—Fuse connector insulating washer (Model 84BT6 only)
	REPRODUCER ASSEMBLIES (76474-3) (Model 84BT only)
14303	Cone—Reproducer cone centered in metal housing complete with dust cap, less output transformer and plug (L9)
5118	Plug—3-contact male plug for reproducer
9802	Reproducer complete
14304	Transformer—Output transformer (T1)
	REPRODUCER ASSEMBLIES (76494-2) (Model 84BT6 only)
14305	Cone—Reproducer cone complete with dust cap (L9)
5118	Plug—3-contact male plug for reproducer
9803	Reproducer complete
14306	Transformer—Output transformer (T1)
	MISCELLANEOUS ASSEMBLIES
14268	Crystal—Station selector crystal
14269	Knob—Station selector or volume control knob
14299	Resistor—0.68 ohm flexible wire wound ballast resistor (Model 84BT only)
14298	Screw—Chassis mounting screw and washer assembly
14270	Spring—Retaining spring for knob Stock No. 14269

NOTE: On later production Model 84BT6, an RCA-41 output tube is used in place of the RCA-42. All circuit and specification data remain the same except the "A" current consumption at 6 volts which is 2.65 amperes.

©John F. Rider, Publisher

RCA MFG. CO., INC.

MODEL 85BT6
Schematic, Socket Trimmers, Specs.

Power Output	Battery Power	A-C Power
Undistorted	0.85 watt	1.2 watts
Maximum	1.5 watts	2.0 watts

Frequency Ranges
"Broadcast" (A) ..... 540-1,720 kc
"Short Wave" (C) ..... 5,800-18,000 kc
Intermediate Frequency ..... 460 kc

Loudspeaker
Type ..... 6-inch Permanent-magnet Dynamic
Voice coil impedance ..... 2.6 ohms at 400 cycles

R-F Alignment Frequencies
"Short Wave" (C) ..... 15,000 kc (osc., ant.)
"Broadcast" (A) ..... 600 kc (osc.), 1,500 kc (osc.)

Pilot Lamp (1) ..... Mazda No. 40, 6.3 volts, 0.15 ampere

Power Supply Ratings
Rating A ..... 105-125 volts, 50-60 cycles, 45 watts
Storage Battery ..... 6 volts, 2.95 amperes
Fuse Rating (Vibrator) ..... 5 amperes

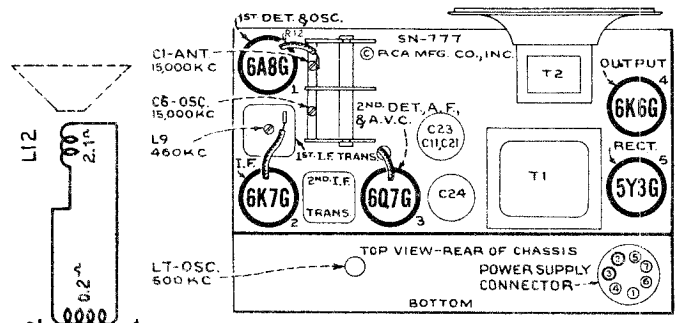

Figure 1—Radiotron and Trimmer Locations

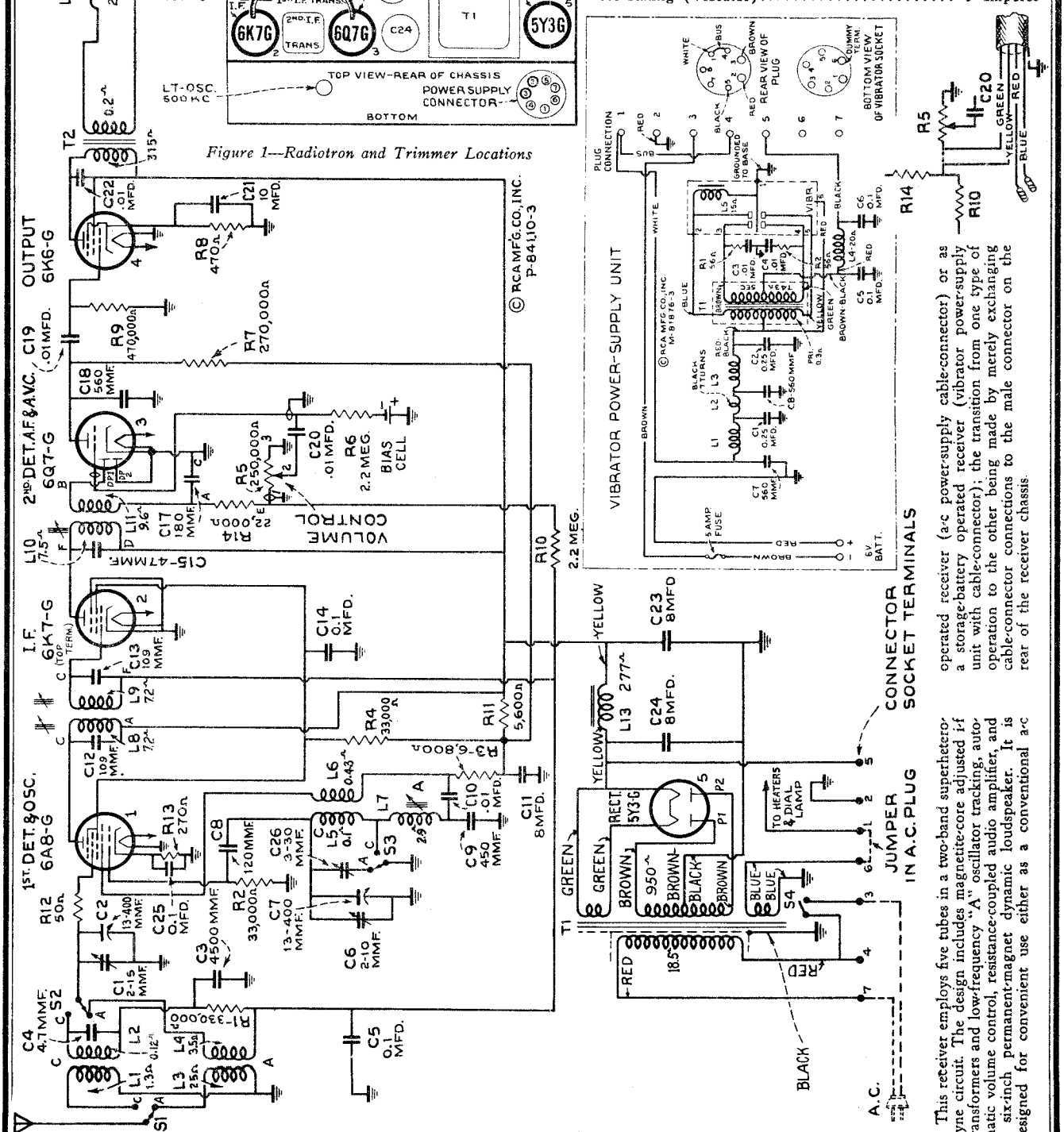

This receiver employs five tubes in a two-band superheterodyne circuit. The design includes magnetite-core adjusted i-f transformers and low-frequency "A" oscillator tracking, automatic volume control, resistance-coupled audio amplifier, and a six-inch permanent-magnet dynamic loudspeaker. It is designed for convenient use either as a conventional a-c operated receiver (a-c power-supply cable-connector) or as a storage-battery operated receiver (vibrator power-supply unit with cable-connector); the transition from one type of operation to the other being made by merely exchanging cable-connector connections to the male connector on the rear of the receiver chassis.

©John F. Rider, Publisher

MODEL 85BT6
R-F Chassis Wiring

RCA MFG. CO., INC.

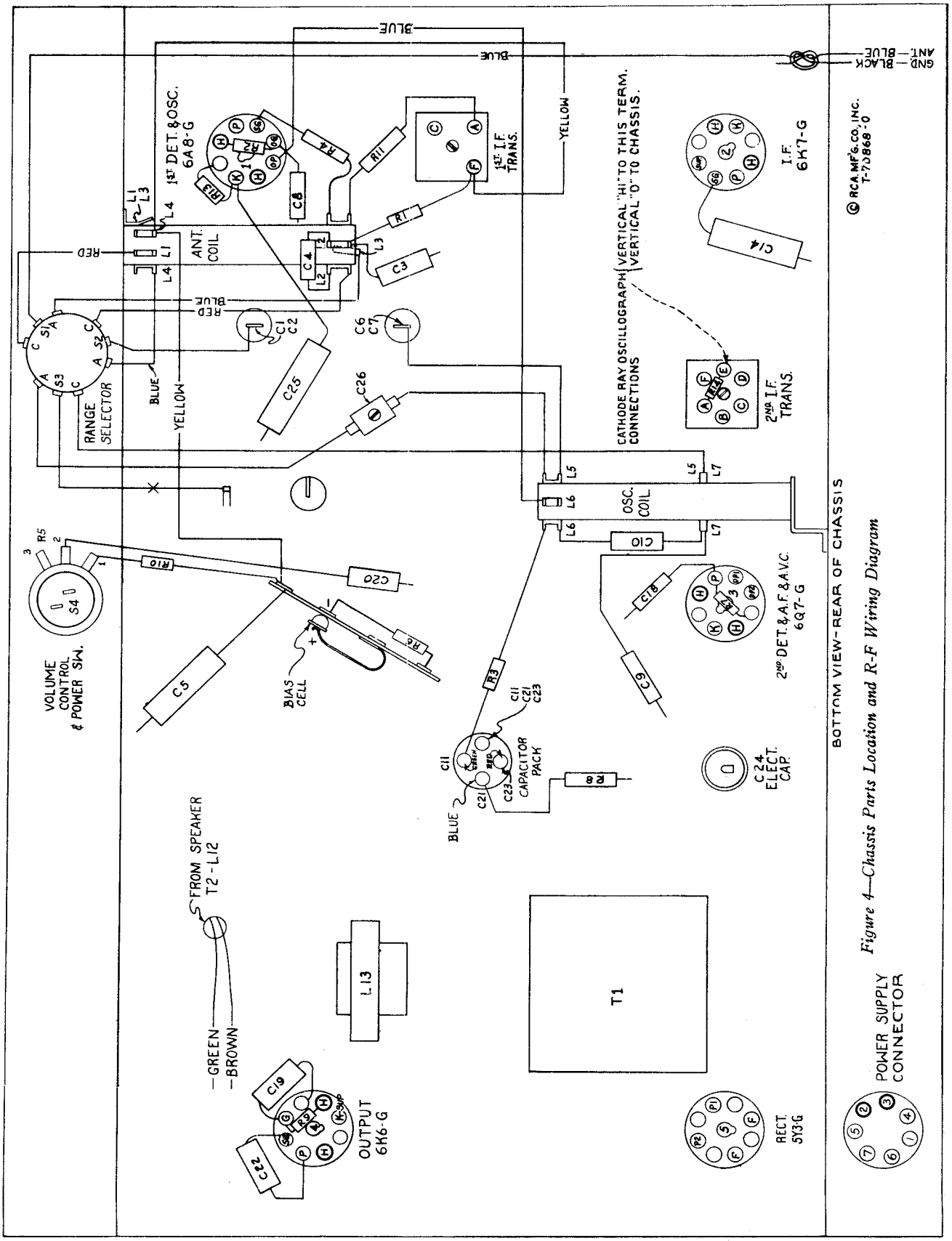

Figure 4—Chassis Parts Location and R-F Wiring Diagram

©John F. Rider, Publisher

RCA MFG. CO., INC.

MODEL 85BT6
Lead Dress, Notes
Trimmers, Voltage

Precautionary Lead Dress.—(1) Dress brown twisted leads to power switch away from bias cell and a-f leads to volume control. (2) Dress light-blue lead, connected from 6A8-G socket to oscillator coil, away from all other leads and chassis. (3) Dress 6A8-G grid-cap lead (R12) to prevent shorts and keep flexible. (4) Dress all leads to antenna coil away from trimming capacitor C26 and from bus lead, connected from oscillator coil to gang condenser. (5) Dress blue antenna lead through the loop of C4 which is mounted on end of antenna coil. Do not change length of the following leads: (6) C9 to chassis; (7) Blue lead from L3 to range selector; (8) Bus lead from oscillator coil to gang condenser. Keep the following as short as possible: (9) Leads to C26; (10) Bus lead from oscillator coil to range selector. In the vibrator power-supply unit: (11) Dress small leads from transformer to vibrator socket terminals 3 and 4 close to base and twist twice. (12) Twist large leads from transformer to vibrator socket terminals 2 and 5. (13) Dress C2 as near to bottom cover as possible.

Phonograph Attachment.—See Schematic Circuit Diagram, figure 3.

CAUTION.—Disconnect plug from a-c power source, or battery clips from storage battery, before attaching either cable-connector to the male connector on the rear of the chassis.

110-Volt A-C Operation.—When the a-c power-supply cable-connector is attached to the male connector on the rear of the chassis; a-c power is supplied to the primary circuit of transformer T1 through terms. 3 and 7. Terms. 1 and 6 are jumpered together, in cable-connector, thereby connecting the tube heaters and dial lamp to the heater winding of T1. Terms. 2, 4, and 5 are not used.

6-Volt Battery Operation.—When the vibrator power-supply unit cable-connector is attached to the male connector on the rear of the chassis, the high side of the battery (−) is connected to receiver "On-Off" switch S4 through term. 3. The other side of S4 connects to term. 4 which in turn is jumpered to term. 1, in cable connector, thereby supplying battery power to the vibrator circuit and to the tube heaters and dial lamp through term. 1. Battery ground return (+) connection is made through term. 2. "B+" voltage from vibrator is connected to the receiver filter input through term. 5. The 5Y3-G rectifier tube circuit is inoperative for this type of operation. Terms. 6 and 7 are not used.

Bias Cell.—The bias cell is used only for the purpose of supplying bias potential to the triode section of the 6Q7-G tube. This cell should never be measured with an ordinary voltmeter, or other device, which draws any current. A simple check on this cell may be made by temporarily shunting the 270,000-ohm plate resistor R7 (mounted on 6Q7-G socket) with a 20,000-ohm resistor, connecting a milliammeter in the plate circuit of the 6Q7-G tube, and noting the plate current reading. Then carefully remove the bias cell and substitute a battery potential of 0.9-volt in its place and note the new reading of the milliammeter. If the first reading obtained (with bias cell) differs from the latter reading (with 0.9-volt battery supply) by more than 20% of the latter reading, the bias cell should be replaced. This 20% is equivalent to a change of approximately 25% battery voltage.

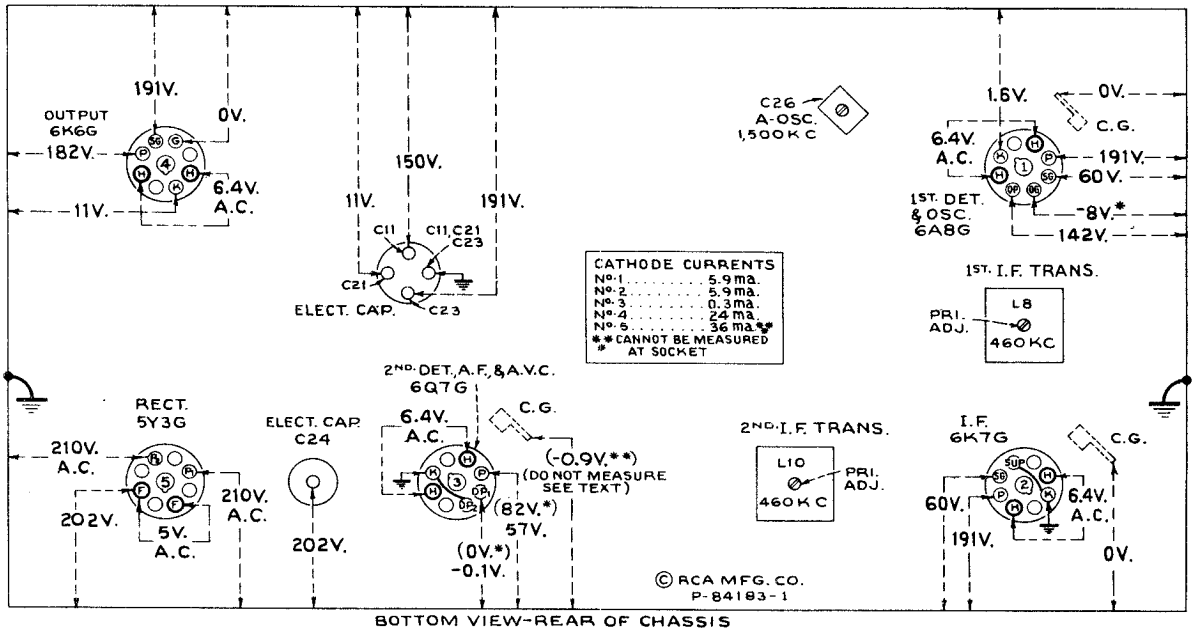

Figure 2—Radiotron Socket Voltages and Trimmer Locations

Measured at 115 volts, 60-cycle supply—Values approximately 5% lower when vibrator power-supply unit is used—Tuned to approximately 1,000 kc ("Broadcast")—No signal being received—Volume control minimum

*** CAUTION: Do not attempt to measure voltage on control grid of the 6Q7-G with any conventional voltmeter due to presence of bias cell.*

Note: Two voltage values are shown for some readings. The higher value shown in parentheses with asterisk (*) indicates operating conditions without voltmeter loading. The lower value is the actual measured voltage and differs from the higher value because of the additional loading of the voltmeter.

Voltage values as specified should hold within ±20% when the receiver is normally operative at its rated line voltage. To duplicate the conditions under which the voltages were measured requires a 1,000-ohm-per-volt d-c meter, having ranges of 10, 50, 250 and 500 volts. Use the nearest range above the specified measured voltage. A-c voltages were measured with a corresponding a-c meter.

©John F. Rider, Publisher

MODEL 85BT6
Alignment
Parts

RCA MFG. CO., INC.

Alignment Procedure

Calibrate the tuning dial by adjusting dial pointer to the center horizontal line with the gang tuning-condenser plates in full-mesh position. This is a screw-driver adjustment.

Perform alignment in proper order, tabulated below, starting with No. 1 and following all operations across, then No. 2, etc. Adjustment locations are shown on figures 1 and 2.

Cathode-ray alignment is preferable; the connections to the chassis are shown on figure 4. If an output indicator is used, connect it across the loudspeaker voice-coil and advance the receiver volume control to full-volume position.

Connect the "low" output terminal of the test oscillator to the receiver chassis for all alignment operations. Regulate the output of the test oscillator so that minimum signal is applied to the receiver to obtain an observable output indication. This will avoid a-v-c action.

The term "Dummy antenna" means the device which must be connected between the "high" test-oscillator output and the point of connection to the receiver in order to obtain ideal alignment. "No signal, 550-750 kc" means that the receiver should be tuned to a point between 550 and 750 kc where no signal or interference is received from a station or local (heterodyne) oscillator.

For further details on alignment, refer to booklet "RCA Victor Receiver Alignment."

Order of Alignment	Test Oscillator			Range Selector	Receiver Dial Setting	Circuit to Adjust	Adjustment Symbols	Adjust to Obtain
	Connection to Receiver	Dummy Antenna	Frequency Setting					
1	6K7-G I-F Grid Cap	.001 Mfd.	460 kc	"A" Left	No Signal 550-750 kc	2nd I-F Trans.	L10	Max. (peak)
2	6A8-G Det. Grid Cap	.001 Mfd.	460 kc	"A" Left	No Signal 550-750 kc	1st I-F Trans.	L8 and L9	Max. (peak)
3	Ant. Lead (blue)	300 Ohms	15,000 kc	"C" Right	15,000 kc	"C" Osc.	C6	Max. (peak)†
4	Ant. Lead (blue)	300 Ohms	15,000 kc	"C" Right	Rock Thru 15,000 kc	"C" Ant.	C1	Max. (peak)*‡
5	Ant. Lead (blue)	200 Mmfd.	600 kc	"A" Left	600 kc	"A" L-F Osc.	L7	Max. (peak)
6	Ant. Lead (blue)	200 Mmfd.	1,500 kc	"A" Left	1,500 kc	"A" H-F Osc.	C26	Max. (peak)
7	Ant. Lead (blue)	200 Mmfd.	600 kc	"A" Left	600 kc	"A" L-F Osc.	L7	Max. (peak)
8	Ant. Lead (blue)	200 Mmfd.	1,500 kc	"A" Left	1,500 kc	"A" H-F Osc.	C26	Max. (peak)

† Use maximum capacity peak if two peaks can be obtained.
* Use minimum capacity peak if two peaks can be obtained.
‡ After this adjustment, check for image signal by shifting receiver dial to 15,920 kc.

STOCK No.	DESCRIPTION
	RECEIVER ASSEMBLIES
14634	Belt—Variable condenser drive belt
14632	Bracket—Dial mounting bracket
5237	Bushing—Variable condenser rubber mounting bushing
11350	Cap—Grid contact cap
30661	Capacitor—Adjustable trimmer (3-30 Mmfd.) (C26)
14392	Capacitor—4.7 Mmfd. (C4)
12405	Capacitor—47 Mmfd. (C15)
14262	Capacitor—110 Mmfd. (C12, C13)
12724	Capacitor—120 Mmfd. (C8)
12812	Capacitor—450 Mmfd. (C9)
13699	Capacitor—470 Mmfd. (C17)
12537	Capacitor—560 Mmfd. (C18)
12728	Capacitor—4,500 Mmfd. (C3)
14393	Capacitor—.01 Mfd. (C10, C19, C20, C22)
4839	Capacitor—0.1 Mfd. (C5, C14, C25)
11203	Capacitor—8 Mfd. (C11)
30657	Capacitor Pack—Comprising two sections each 8 Mfd. and one section 10 Mfd. (C21, C23, C24)
12681	Cell—Bias cell
4358	Clamp—Capacitor pack mounting clamp for Stock No. 30657
30659	Coil—Antenna coil (L1, L2, L3, L4)
14647	Coil—Oscillator coil (L5, L6, L7)
14633	Condenser—2-gang variable tuning condenser (C1, C2, C6, C7)
14631	Dial—Station selector dial and holder
14651	Drive—Variable condenser vernier drive and pinion gear
30660	Holder—Bias cell holder
14635	Indicator—Station selector indicator pointer
4340	Lamp—Dial lamp
14404	Plug—7-contact male plug for rear apron of chassis
14636	Pulley—Idler pulley—less spring
14639	Pulley—Variable condenser drive pulley—located on condenser shaft
12818	Reactor—Filter reactor (L13)
14653	Resistor—50 ohms, flexible type (R12)
13454	Resistor—270 ohms, carbon type, ½ watt (R13)
30499	Resistor—470 ohms, insulated, ½ watt (R8)
5175	Resistor—5,600 ohms, carbon type, ½ watt (R11)
12265	Resistor—6,800 ohms, insulated, ½ watt (R3)
13998	Resistor—22,000 ohms, insulated, ½ watt (R14)
8072	Resistor—33,000 ohms, carbon type, ½ watt (R4)
12454	Resistor—33,000 ohms, insulated, ½ watt (R2)
12199	Resistor—270,000 ohms, insulated, ½ watt (R7)
13733	Resistor—330,000 ohms, carbon type, ½ watt (R1)
12285	Resistor—470,000 ohms, insulated, ½ watt (R9)
12679	Resistor—2.2 megohms, insulated, ½ watt (R6, R10)
5129	Ring—Radiotron shield ring
4389	Screw—No. 6-32 x 3/16-inch headless set-screw for drive pulley, Stock No. 14639
14638	Shaft—Station selector knob shaft and pulley
5037	Shield—Radiotron shield
14658	Socket—Dial lamp socket
11196	Socket—Radiotron socket
14637	Spring—Idler pulley tension spring
30655	Switch—Range switch (S1, S2, S3)
14376	Transformer—First I.F. transformer (L8, L9, C12, C13)
14642	Transformer—Second I.F. transformer (L10, L11, C15, C17)
30656	Transformer—Power transformer, 105-125 volts, 50-60 cycles (T1)
30658	Volume control and power switch (R25, S4)
	REPRODUCER ASSEMBLIES (84140-1)
30664	Cone—Reproducer cone and voice coil mounted and centered in metal housing (L12)
30662	Reproducer, complete
30663	Transformer—Output transformer (T2)
	VIBRATOR POWER UNIT ASSEMBLIES
14724	Capacitor—560 Mmfd. (C7, C8)
11654	Capacitor—.01 Mfd. (C3, C4)
4839	Capacitor—0.1 Mfd. (C5, C6)
12484	Capacitor—0.25 Mfd. (C1, C2)
14289	Clip—Battery clips for vibrator battery cable
12179	Coil—Choke coil (L1, L3)
12819	Coil—Choke coil and terminal board assembly (L4)
5140	Fuse—5-amp. (F1)
13220	Resistor—56 ohms, carbon type, ½ watt (R1, R2)
30667	Socket—7-contact female socket for vibrator to chassis power cable
30665	Transformer—Vibrator power transformer (T1)
30666	Vibrator (L5)
	MISCELLANEOUS ASSEMBLIES
14654	Escutcheon—Station selector escutcheon and crystal
30668	Cord—A.C. power cord and plug for 110-volt operation
12673	Knob—Station selector, range switch, or volume control knob
4119	Screw—No. 8-32 x ¼-inch headless cup-pointed set-screw for knob, Stock No. 12673

©John F. Rider, Publisher

RCA MFG. CO., INC.

MODELS 85E, U102E
Schematic
Chassis Wiring
Transformers

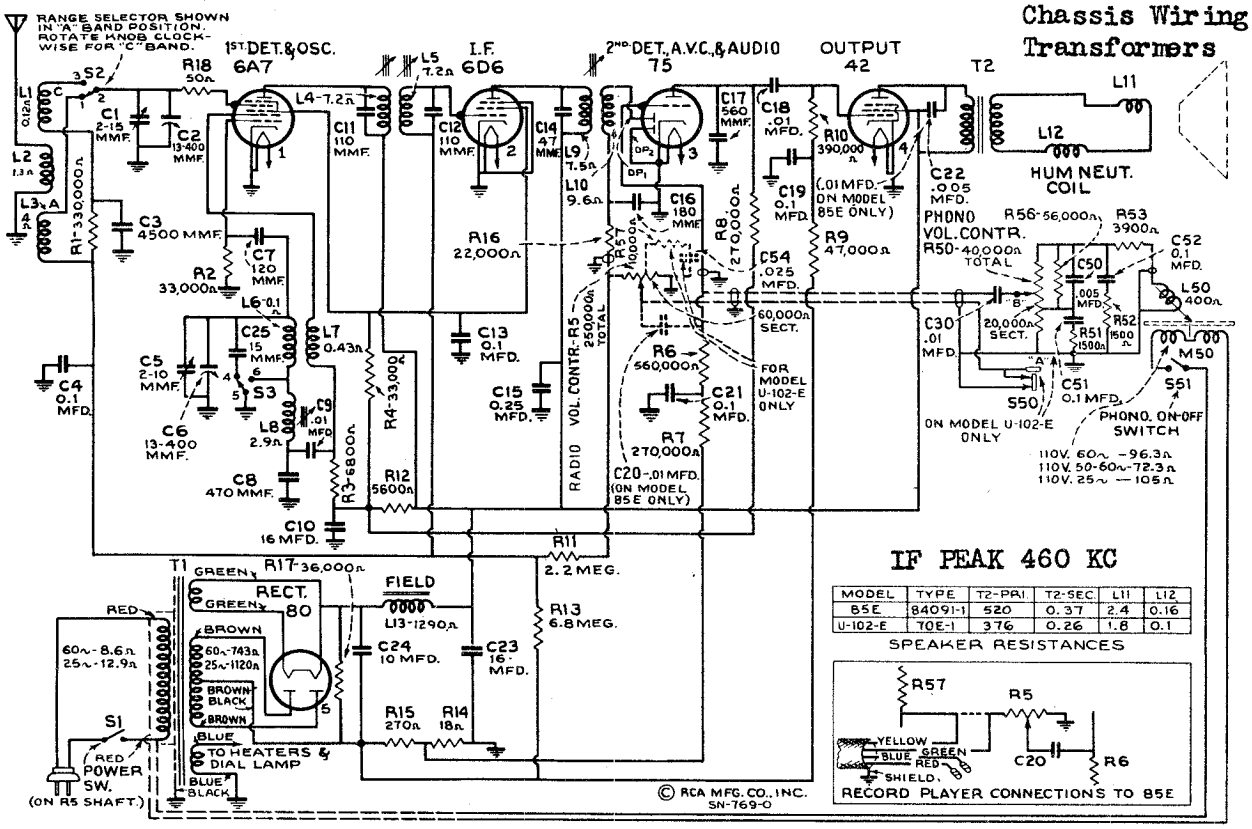

IF PEAK 460 KC

MODEL	TYPE	T2-PRI.	T2-SEC.	L11	L12
85E	84091-1	520	0.37	2.4	0.16
U-102-E	70E-1	376	0.26	1.8	0.1

SPEAKER RESISTANCES

Figure 2—Schematic Circuit Diagram

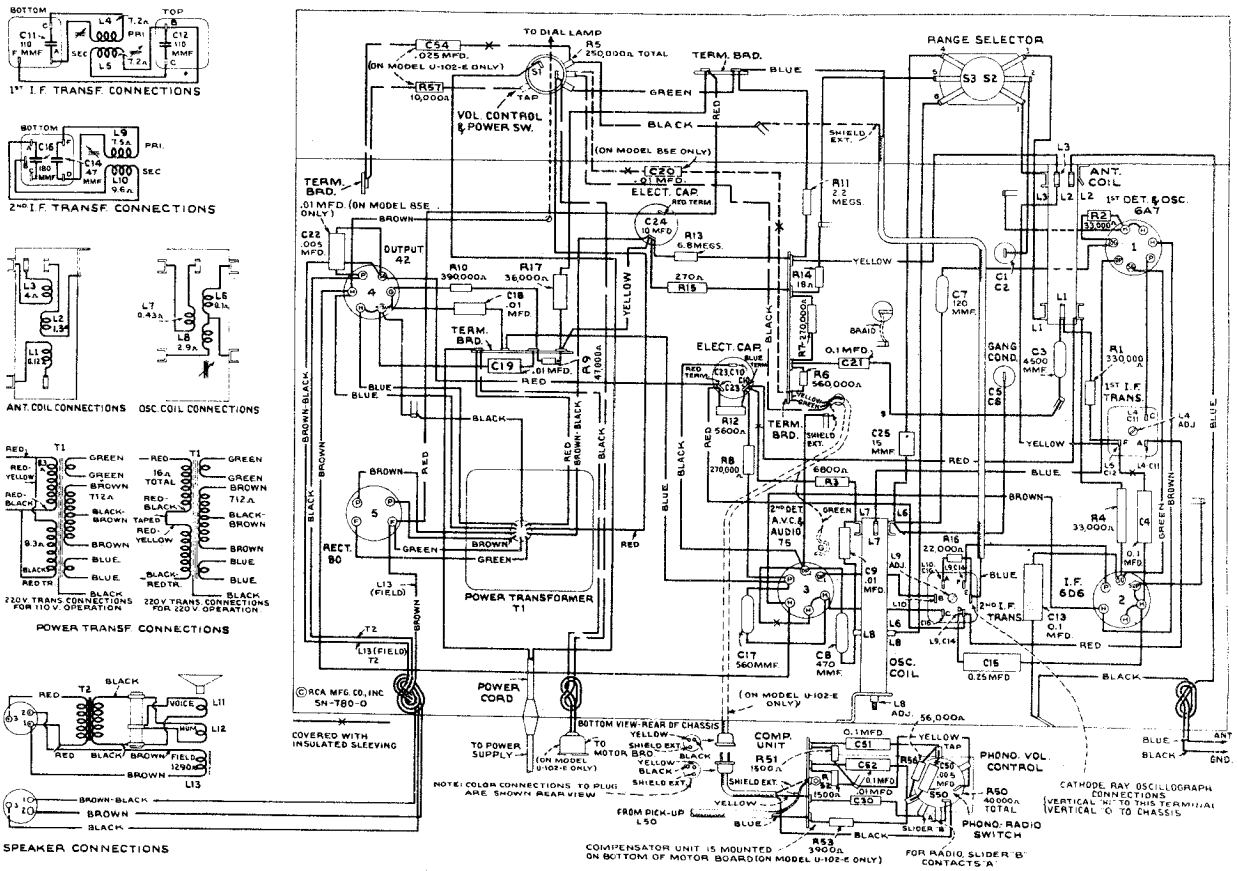

Figure 3—Chassis Wiring Diagram

©John F. Rider, Publisher

MODELS 85E, U102E
Socket, Trimmers
Voltage, Specs.
Pick-up, Motor Details

RCA MFG. CO., INC.

LOUDSPEAKER	85E	U-102E
Type, Electrodynamic	6-inch	12-inch
Impedance (v.c.) at 400 cycles	2.6 ohms	2.2 ohms

Type of Pickup..... High-impedance magnetic
Pickup Impedance..... 1,400 ohms at 1,000 cycles

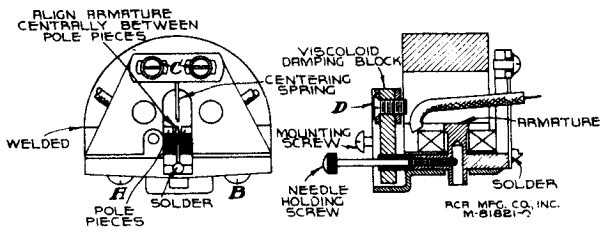

Figure 1—Details of Pickup

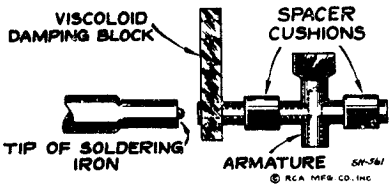

Figure 4—Special Soldering-Iron Tip

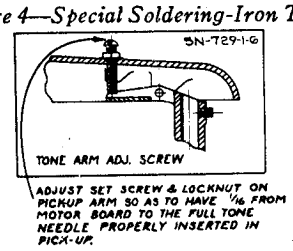

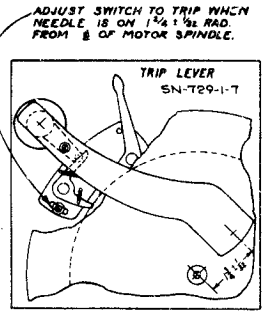

Figure 5—Tone Arm and Motor Switch Adjustments

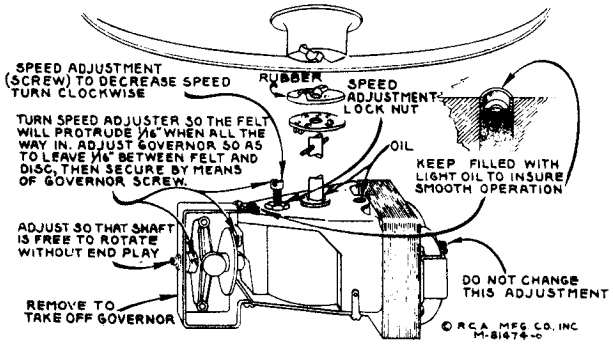

Figure 6—Details of Motor

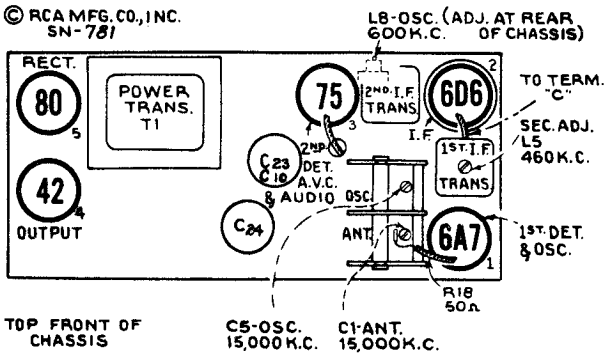

Figure 7—Radiotron, Coil, and Trimmer Locations

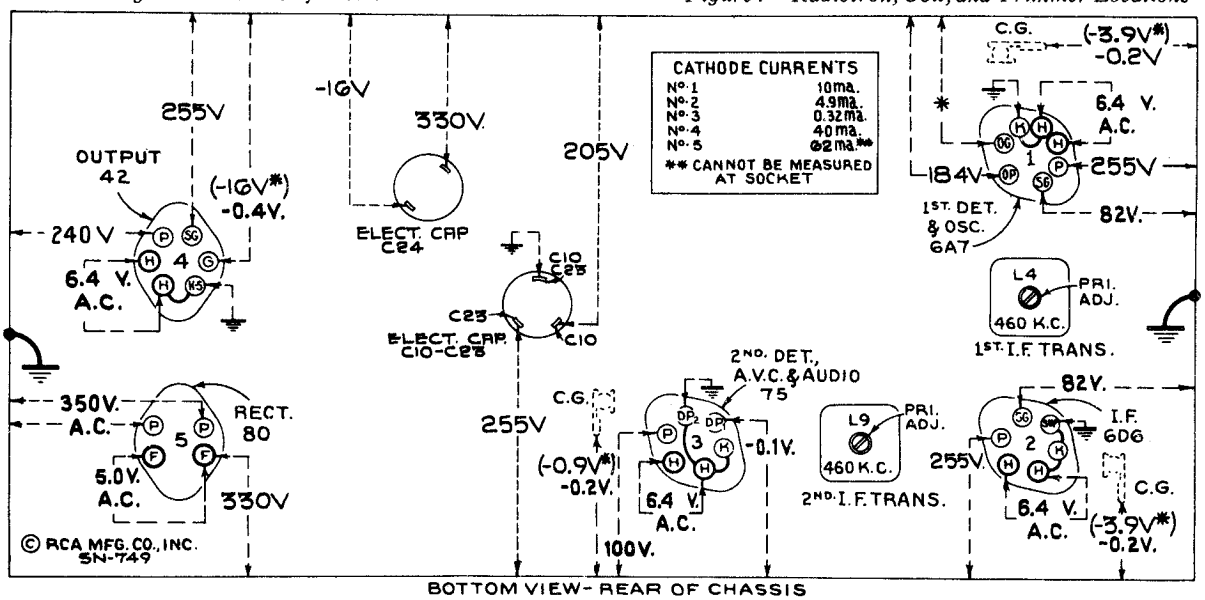

Figure 8—Radiotron Socket Voltages, Coil, and Trimmer Locations

Measured at 115 volts, 60-cycle supply—Tuned to approximately 1,000 kc ("Broadcast")—
No signal being received—Volume control minimum

Note: Two voltage values are shown for some readings. The value shown in parentheses with asterisk (*) indicates operating conditions without voltmeter loading. The other value (generally lower) is the actual measured voltage and differs from the value shown in parentheses because of the additional loading of the voltmeter through the high series circuit resistance.

Voltage values as specified should hold within ±20% when the receiver is normally operative at its rated line voltage. To duplicate the conditions under which the voltages were measured requires a 1,000-ohm-per-volt d-c meter, having ranges of 10, 50, 250, and 500 volts. Use the nearest range above the specified measured voltage. A-c voltages were measured with a corresponding a-c meter.

©John F. Rider, Publisher

©John F. Rider, Publisher

Precautionary Lead Dress—(1) Dress power line leads to the on-off switch away from grid connection terminal on volume control to reduce hum pickup. (2) Keep leads of capacitor C3 as short as possible. (3) Bus leads from range selector (ter. 6) to oscillator-coil tap L6-L8 should be maintained 3½-inches long for proper alignment. (4) Capacitor C25 should be dressed free of adjacent parts to maintain correct alignment at high-frequency end of "A" band. (5) Bus lead from range selector (ter. 3) to antenna coil L1 should be maintained 2¼-inches long for proper alignment. (6) The RCA-6A7 grid-cap lead (50-ohm resistor R18) to top of tuning capacitor C2 should be dressed properly to prevent shorts and should be maintained flexible to prevent acoustic howl.

Loudspeaker.—Centering of the loudspeaker is made in the usual manner with three narrow paper feelers after first removing the front dust cover. This may be removed by softening its cement with a light application of acetone, using care not to allow the acetone to flow into the air gap. The dust cover should be cemented back in place with ambroid upon completion of adjustment.

Magnetic Pickup

(Model U-102E)

The pickup used in the phonograph unit is of an improved design. The horseshoe magnet is rigidly welded to the pole pieces and is irremovable. There is a centering spring attached to the armature to maintain proper adjustment and to provide a limiting effect on the movement of the armature. The frequency response is substantially uniform over a wide range. Service operations which may be necessary on the pickup are as follows:

Centering Armature.—Refer to figure 1 showing the pickup inner structure. The armature is shown in its proper relation to the magnet pole pieces, i. e., exactly centered. Whenever this centering adjustment has been disturbed it will be necessary to remove the pickup mechanism from the tone arm by removing the needle holding screw and the two mounting screws from the front of the tone arm and holding the pickup assembly to keep it from dropping. Unsolder the two leads from the lugs on the terminal board at the rear of the pickup. Insert a small rod or nail into the armature needle hole and replace the needle holding screw, tightening it to hold the rod securely. If the armature clamping screws A and B have not been disturbed, screws C should be loosened which will permit the armature to be moved from side to side, the rod acting as a lever to perform this operation. Proper adjustment is obtained when the armature is moved to the extreme position on each side (the movement being limited by the armature striking the pole pieces) and then brought to the mid-position between these two extremes. Screws C should then be tightened. The armature position should then be central between the pole pieces and at right angles to them. With a little practice, the correct adjustment of the armature will be obtained. The air gap between the pole pieces and the armature should be kept free from dust, filings, and other foreign material which would obstruct the movement of the pickup armature.

Damping Block.—The viscoloid damping block which is attached to the front end of the armature shank serves as a mechanical filter to eliminate undesirable resonances and to cause the frequency response to be uniform. Should it be necessary to replace this damping block, the pickup mechanism should be removed from the tone arm as explained above. Remove screw D and the damping block from the pickup assembly. Make sure that the shaft of the armature which contacts the viscoloid is clean. Then insert the new damping block so that it occupies the same position as that of the original block, and is in correct vertical alignment with the armature. The hole in the block is somewhat smaller than the diameter of the armature in order to permit a snug fit. With the damping block properly aligned on the armature, screw D with its washer should then be replaced. Heat should be applied to the armature (viscoloid side) so that the damping block will fuse at the point of contact and become rigidly attached to the armature. A special-tip soldering iron, constructed as shown in figure 4 will be found very useful in performing this operation. The iron should be applied only long enough to slightly melt the block, causing a small bulge on both sides.

Replacing Coil.—Whenever there is defective operation due to an open or shorted pickup coil, this coil should be replaced. Remove the pickup mechanism and terminal board as described above. Remove screws A and B and the magnet assembly. Remove the bakelite coil support (with coil attached) and insert the new coil support assembly in its place, after which replace the magnet assembly and center the armature as described above, then re-assemble the remainder of the unit.

Magnetizing.—In case it becomes necessary to re-magnetize the unit, first remove the pickup mechanism from the tone arm, and then remove the magnet assembly. Place the magnet assembly on the poles of a standard pickup magnetizer such as the RCA Stock No. 9549 Pickup Magnetizer and charge the magnet in accordance with the instructions accompanying the magnetizer. It is preferable to check the polarity of the pickup magnet and to re-magnetize it so that the same polarity is maintained.

Motor and Motorboard

(Model U-102E)

The adjustments for tone-arm height and automatic stop-switch position are shown in figure 5.

The phonograph motor is of the governor induction type and designed to be simple and foolproof. Occasionally, however, certain adjustments may be required. These adjustments are illustrated and explained in figure 6. Apply a few drops of light machine oil in the three holes provided and around the motor spindle every six months to ensure smooth operation.

Alignment Procedure

Calibrate the tuning dial by adjusting dial pointer to the center horizontal line with the gang tuning-condenser plates in full-mesh position. This is a screw-driver adjustment.

Perform alignment in proper order, tabulated below, starting with No. 1 and following all operations across, then No. 2, etc. Adjustment locations are shown on figures 7 and 8.

Cathode-ray alignment is preferable; the connections to the chassis are shown on figure 3. If an output indicator is used, connect it across the loudspeaker voice-coil and advance the receiver volume control to full-volume position.

Connect the "low" output terminal of the test oscillator to the receiver chassis for all alignment operations. Regulate the output of the test oscillator so that minimum signal is applied to the receiver to obtain an observable output indication. This will avoid a-v-c action.

The term "Dummy antenna" means the device which must be connected between the "high" test-oscillator output and the point of connection to the receiver in order to obtain ideal alignment. "No signal, 550-750 kc" means that the receiver should be tuned to a point between 550 and 750 kc where no signal or interference is received from a station or local (heterodyne) oscillator.

For further details on alignment, refer to booklet "RCA Victor Receiver Alignment."

Order of Alignment	Test Oscillator			Range-Selector	Receiver Dial Setting	Circuit to Adjust	Adjustment Symbols	Adjust to Obtain
	Connection to Receiver	Dummy Antenna	Frequency Setting					
1	6D6 I-F Grid Cap	.001 Mfd.	460 kc	"A" Left	No Signal 550-750 kc	2nd I-F Trans.	L9	Max. (peak)
2	6A7 Det. Grid Cap	.001 Mfd.	460 kc	"A" Left	No Signal 550-750 kc	1st I-F Trans.	L4 and L5	Max. (peak)
3	Ant. Lead (blue)	300 Ohms	15,000 kc	"C" Right	15,000 kc	"C" Osc.	C5	Max. (peak)†
4	Ant. Lead (blue)	300 Ohms	15,000 kc	"C" Right	Rock Through 15,000 kc	"C" Ant.	C1	Max. (peak)*‡
5	Ant. Lead (blue)	200 Mmfd.	600 kc	"A" Left	600 kc	"A" Osc.	L8	Max. (peak)

† Use maximum capacity peak if two peaks can be obtained.
* Use minimum capacity peak if two peaks can be obtained.
‡ After this adjustment, check for image signal by shifting receiver dial to 15,920 kc.

FREQUENCY RANGES

"Broadcast" (A)	540-1,720 kc
"Short Wave" (C)	5,800-18,000 kc
Intermediate Frequency	460 kc
Pilot Lamp (1)	Mazda No. 46, 6.3 volts, 0.25 ampere

POWER SUPPLY RATINGS

Model U-102E	Radio only	Total
A-6. 105-125 volts, 60 cycles	75 watts..	100 watts
A... 105-125 volts, 50-60 cycles	75 watts..	105 watts
B-2. 105-125 volts, 25 cycles	75 watts..	105 watts
C-6. 105-125/200-250 volts, 60 cycles.	75 watts..	100 watts
C.. 105-125/200-250 volts, 50-60 cycles	75 watts..	105 watts

POWER OUTPUT	85E	U-102E
Undistorted	2.0 watts	2.5 watts
Maximum	4.0 watts	4.5 watts

R-F ALIGNMENT FREQUENCIES

"Broadcast" (A)	600 kc (osc.)
"Short Wave" (C)	15,000 kc (osc., ant.)

Model 85E	
A	105-125 volts, 50-60 cycles, 75 watts
B	105-125 volts, 25-60 cycles, 75 watts
C	105-125/200-250 volts, 50-60 cycles, 75 watts

PHONOGRAPH (Model U-102E only)

Type	Manual
Turntable Speed (Adjustable)	78 r.p.m.

STOCK No.	DESCRIPTION
	RECEIVER ASSEMBLIES
30461	**Belt—Flat, endless drive belt**
30460	**Belt—Phosphor-bronze belt for indicator-pointer drive**
30473	**Cable—3-conductor shielded compensation cable with female connector and grid clip (Model U-102E only)**
12118	**Cap—Grid contact cap**
12896	**Capacitor—15 Mmfd. (C25)**
12405	**Capacitor—47 Mmfd. (C14)**
14262	**Capacitor—110 Mmfd. (C11, C12)**
12484	Capacitor—0.25 Mfd. (C15)
14814	Capacitor—10 Mfd. (C24)
14813	Capacitor Pack—Comprising 2 sections each 16 Mfd. (C10, C23)
14646	Coil—Antenna coil (L1, L2, L3)
14647	Coil—Oscillator coil (L6, L7, L8)
14633	Condenser—2-gang variable tuning condenser (C1, C2, C5, C6)
14783	Connector—2-contact female connector for motor power cable (Model U-102E only)
5119	Connector—3-contact female connector for speaker cable
30474	Connector—3-contact female connector for cable Stock No. 30473 (Model U-102E only)
12006	Core—Adjustable core and stud assembly for I.F. transformers
14631	Dial—Station-selector dial scale and holder
14651	Drive—Vernier drive and pinion gear for tuning condenser
14635	Indicator—Station selector indicator pointer
5226	Lamp—Dial lamp
30465	Pulley—Drive-belt intermediate pulley—located on side of belt opposite idler pulley
14639	Pulley—Drive-belt pulley—fastens on vernier drive of tuning condenser
14636	Pulley—Idler pulley—less spring
30464	Pulley—Indicator-belt pulley—fastens on rotor shaft of tuning condenser
30459	Pulley—Indicator-pointer pulley and shaft—less screw to hold belt
14660	Res.stor—18 ohms, insulated, ½ watt (R14)
14653	Resistor—50 ohms, flexible type, 1/10 watt (R18)
13819	Res.stor—270 ohms, insulated, wire wound, 1.1 watt (R15)
5175	Resistor—5,600 ohms, carbon type, ½ watt (R12)
14659	Resistor—6,800 ohms, carbon type, ½ watt (R3)
14659	Resistor—10,000 ohms, insulated, ½ watt (R57) (Model U-102E only)
11305	Resistor—22,000 ohms, carbon type, ½ watt (R16)
13735	Resistor—33,000 ohms, carbon type, ½ watt (R2)
5033	Resistor—33,000 ohms, carbon type, 1 watt (R4)
5206	Resistor—36,000 ohms, wire wound, 20 watt (R17)
11648	Resistor—47,000 ohms, carbon type, ½ watt (R9)
11323	Resistor—270,000 ohms, carbon type, ½ watt (R7, R8)
13733	Resistor—330,000 ohms, carbon type, ½ watt (R1)
13479	Res.stor—390,000 ohms, carbon type, ½ watt (R10)
5035	Resistor—660,000 ohms, carbon type, ½ watt (R6)
12679	Resistor—2.2 Megohms, insulated, ½ watt (R11)
14661	Resistor—6.8 Megohms, insulated, ½ watt (R13)
30340	Retainer—Indicator pulley or drive-belt intermediate-pulley retainer
5129	Ring—Retaining ring for Radiotron shield
30463	Screw—No. 4-40 x 3/16-in. binder-head screw to fasten indicator drive belt
4389	Screw—No. 6-32 x 3/16-in. headless set screw for pulley Stock No. 14639
5042	Screw—No. 8-32 x 1/8-in. headless set screw for pulley Stock No. 30464
14638	Shaft—Knob shaft and pulley
12008	Shield—First I.F. transformer shield can
12408	Shield—Second I.F. transformer shield can
11265	Shield—Radiotron shield complete
4794	Socket—4-contact 80 Radiotron socket
4786	Socket—6-contact 6D6, 75, or 42 Radiotron socket
4787	Socket—7-contact 6A7 Radiotron socket
14658	Socket—Dial-lamp socket
30462	Spring—Idler-pulley tension spring
12007	Spring—Retaining spring for core Stock No. 12006
14640	Switch—Range switch (S2, S3)
14376	Transformer—First I.F. transformer (L4, L5, C11, C12)
14642	Transformer—Second I.F. transformer (L9, L10, C14, C16)
30607	Transformer—Power transformer—105-125 volts, 50-60 cycles (T1)
14657	Transformer—105-125/200-250 volts, 50-60 cycles (T1)
14826	Volume control and power switch (R5, S1) (Model U-102E only)
14645	Volume control and power switch (R5, S1) (Model 85E only)
	MOTORBOARD ASSEMBLIES (Model U-102E only)
14803	Brake—Turntable brake and switch
14805	Connector—2-contact male connector for motor and switch leads
3261	Rest—Pickup needle rest
30948	Screw—Motor mounting screw, washer, rubber washer and clamp plate
30100	Springs—Tension springs for brake Stock No. 14803—comprising one long and one short spring
14804	Switch—Motor switch—located on turntable brake (S51)
12724	**Capacitor—120 Mmfd. (C7)**
12406	**Capacitor—180 Mmfd. (C16)**
30396	**Capacitor—470 Mmfd. (C9)**
14724	**Capacitor—580 Mmfd. (C17)**
30245	**Capacitor—.0045 Mfd. (C3)**
4858	**Capacitor—.005 Mfd. (C22) (Model U-102E only)**
4868	**Capacitor—.01 Mfd. (C20, C24) (Model 85E only)**
14393	**Capacitor—.01 Mfd. (C9, C18)**
4870	**Capacitor—.025 Mfd. (C54) (Model U-102E only)**
4839	**Capacitor—0.1 Mfd. (C4, C13, C19, C21).**
	MOTOR ASSEMBLIES (Model U-102E only)
11703	Governor—Motor governor complete
30475	Motor—105-125 volts, 50-60 cycle (M50)
14800	Motor—105-125 volts, 60 cycle (M50)
	PICKUP AND ARM ASSEMBLIES (Model U-102E only)
14291	Armature—Pickup armature
11732	Coil—Pickup coil (L50)
14292	Damper—Pickup damper block complete with clamp and screw
30476	Pickup and Arm complete
3811	Screw—Pickup needle screw
	REPRODUCER ASSEMBLIES (Model 85E only) (Speaker No. 84091-1)
14616	Coil—Reproducer field coil (L12, L13)
14614	Cone—Reproducer cone and voice coil (L11)
5118	Plug—3-contact male plug
14613	Reproducer—Complete
14615	Transformer—Output transformer (T2)
	REPRODUCER ASSEMBLIES (Model U-102E only) (Speaker No. RL-70E-1)
13868	Cap—Dust cap for cone center
14354	Coil—Reproducer field coil (L13)
11469	Coil—Hum neutralizing coil (L12)
12667	Cone—Reproducer cone and voice coil (L11)
5118	Plug—3-contact male plug
14398	Reproducer—Complete
14358	Screw—Screw and lockwasher to hold core in yoke
14355	Transformer—Output transformer (T2)
14357	Washer—Spring washer to hold field coil
	MISCELLANEOUS ASSEMBLIES (Model 85E only)
14854	Escutcheon—Station-selector escutcheon and crystal
12673	Knob—Tuning, volume control, or range switch knob
4119	Screw—No. 8-32, headless set screw for knob Stock No. 12673
30468	Screw—Chassis mounting screw and washer assembly
	MISCELLANEOUS ASSEMBLIES (Model U-102E only)
11782	Box—Used-needle box
30478	Cable—3-conductor shielded compensator cable complete with 3-contact male connector
14393	Capacitor—.01 Mfd. (C30)
4839	Capacitor—0.1 Mfd. (C50, C51)
14782	Connector—3-contact male connector for cable Stock No. 30478
11704	Damper—Turntable rubber damper and damper plate
14654	Escutcheon—Station-selector escutcheon and crystal
12673	Knob—Tuning, radio-volume control, range switch or phonograph-volume control knob
4119	Screw—No. 8-32, headless set screw for knob Stock No. 12673
30477	Screw—Chassis mounting screw, washer, lockwasher and nut—for rear of chassis
30535	Screw—Chassis mounting screw and washer—for front of chassis
30249	Screw—Motorboard mounting screw, spring, spacer, washer, lockwasher and rubber washer assembly
14489	Resistor—1,500 ohms, insulated, ½ watt (R52)
12955	Resistor—3,900 ohms, insulated, ½ watt (R53)
12286	Resistor—58,000 ohms, insulated, ½ watt (R56)
14801	Turntable
14815	Volume Control—Phonograph volume control and switch (R50, S50)

MODELS 86T3,87T1
Alignment,Parts

RCA MFG. CO., INC.

Alignment Procedure

With the gang tuning-condenser plates in full-mesh position, adjust the pointer to the low-frequency (end) calibration mark on the dial scale. The pointer is soldered in place on the drive cable.

Perform alignment in proper order, tabulated below, starting with No. 1 and following all operations across, then No. 2, etc. Adjustment locations are shown on figures 1 and 2.

Cathode-ray alignment is preferable; the connections to the chassis are shown on figure 4. If an output indicator is used, connect it across the loudspeaker voice-coil and advance the receiver volume control to full-volume position.

Connect the "low" output terminal of the test oscillator to the receiver "G" (ground) terminal for all alignment operations. Regulate the output of the test oscillator so that minimum signal is applied to the receiver to obtain an observable output indication. This will avoid a-v-c action.

The term "Dummy antenna" means the device which must be connected between the "high" test-oscillator output and the point of connection to the receiver in order to obtain ideal alignment. "No signal, 550-750 kc" means that the receiver should be tuned to a point between 550 and 750 kc where no signal or interference is received from a station or local (heterodyne) oscillator.

For further details on alignment, refer to booklet "RCA Victor Receiver Alignment."

Order of Alignment	Test Oscillator: Connection to Receiver	Test Oscillator: Dummy Antenna	Test Oscillator: Frequency Setting	Range Selector	Receiver Dial Setting	Circuit to Adjust	Adjustment Symbols	Adjust to Obtain
1	6K7 I-F Grid Cap	.001 Mfd.	460 kc	"A" Left	No Signal 550-750 kc	2nd I-F Trans.	L12 and L13	Max. (peak)
2	6A8 Det. Grid Cap	.001 Mfd.	460 kc	"A"	No Signal 550-750 kc	1st I-F Trans.	L10 and L11	Max. (peak)
3	Ant. Term.	300 Ohms	6,000 kc	"B" Center	6,000 kc	"B" Osc.	C11	Max. (peak)*
4	Ant. Term.	300 Ohms	6,000 kc	"B"	6,000 kc	"B" Ant.	C2	Max. (peak)†
5	Ant. Term.	300 Ohms	20,000 kc	"C" Right	20,000 kc	"C" Osc.	C7	Max. (peak)‡
6	Ant. Term.	200 Mmfd.	600 kc	"A" Left	600 kc	"A" L-F Osc.	L8	Max. (peak)
7	Ant. Term.	200 Mmfd.	1,500 kc	"A"	1,500 kc	"A" H-F Osc.	C10	Max. (peak)
8	Ant. Term.	200 Mmfd.	600 kc	"A"	600 kc	"A" L-F Osc.	L8	Max. (peak)
9	Ant. Term.	200 Mmfd.	1,500 kc	"A"	1,500 kc	"A" H-F Osc.	C10	Max. (peak)

* Use minimum capacity peak if two peaks can be obtained.

† After this adjustment, check for image signal by shifting receiver dial to 5,080 kc.

‡ Use maximum capacity peak if two peaks can be obtained. After this adjustment, check for image signal by shifting receiver dial to 20,920 kc.

Note that the heterodyne oscillator tracks above the signal frequency on bands "A" and "B," and below the signal frequency on band "C."

R-F Alignment Frequencies

"Medium Wave" (B)..... 6,000 kc (osc., ant.)
"Short Wave" (C)..... 20,000 kc (osc.)
"Standard Broadcast" (A).. 600 kc (osc.), 1,500 kc (osc.)

Frequency Ranges

"Standard Broadcast" (A) ... 540- 1,740 kc
"Medium Wave" (B)..... 2,300- 7,000 kc
"Short Wave" (C)..... 7,000-22,000 kc
Intermediate Frequency..... 460 kc

Pilot Lamps (2)..... Mazda No. 46, 6.3 volts, 0.25 amp.

Power Supply Ratings

Rating A..... 105-125 volts, 50-60 cycles, 75 watts
Rating B..... 105-125 volts, 25-60 cycles, 75 watts
Rating C..... 105-125/200-250 volts, 50-60 cycles, 75 watts

STOCK No.	DESCRIPTION
	RECEIVER ASSEMBLIES
14380	Arm—Hub and arm for operating band indicator shutter—fastens on range switch shaft
14352	Belt—Station selector drive belt
13216	Board—Antenna and ground terminal board
12717	Board—Phonograph terminal board
12607	Cap—Top shield cap for first I.F. transformer
12581	Cap—Top shield cap for second I.F. transformer
11350	Cap—Grid contact cap
12723	Capacitor—56 Mmfd. (C5)
14262	Capacitor—110 Mmfd. (C14, C15)
12404	Capacitor—120 Mmfd. (C27, C28)
12406	Capacitor—180 Mmfd. (C19)
12488	Capacitor—270 Mmfd. (C21)
30433	Capacitor—470 Mmfd. (C4, C9)
30592	Capacitor—1,600 Mmfd. (C8)
30303	Capacitor—.0035 Mfd. (C1)
4838	Capacitor—.005 Mfd. (C23, C31)
14393	Capacitor—.01 Mfd. (C20, C22)
4870	Capacitor—.025 Mfd. (C30, C40) (C40—Model 87T1 only)
4839	Capacitor—0.1 Mfd. (C16, C17)
12484	Capacitor—0.25 Mfd. (C13)
11203	Capacitor—10 Mfd. (C12)
30577	Capacitor Pack—Comprising two sections each 10 Mfd. (C24, C26)
5212	Capacitor—16 Mfd. (C25)
4358	Clamp—Mounting clamp for capacitor pack, Stock No. 30577
30578	Coil—Antenna coil (L1, L2, L3)
30579	Coil—Oscillator coil (L4, L5, L6, L7, L8, L9)
30573	Condenser—2-gang variable tuning condenser (C2, C3, C6)
30580	Condenser—3-gang mica trimmer—two sections each 2-10 Mmfd., one section 3-30 Mmfd. (C7, C10, C11)
30586	Cord—Station-selector indicator pointer cord
12800	Core—Adjustable core and stud for oscillator coil
12006	Core—Adjustable core and stud for I.F. transformer
30589	Dial—Station-selector dial scale
30581	Disc—Band indicator disc with celluloid window
30572	Drive—Vernier drive shaft and pinion gear for variable condenser
30584	Drum—Station-selector drive-cord drum with set screws
30583	Indicator—Station-selector indicator pointer and holder assembly
5226	Lamp—Dial lamp
30587	Pulley—Drive-belt pulley for condenser shaft
14636	Pulley—Drive-belt idler pulley
14525	Resistor—22 ohms, carbon type, ½ watt (R13)
30590	Resistor—39 ohms, carbon type, ½ watt (R19)
14653	Resistor—50 ohms, flexible type, 1/10 watt (R20)
30591	Resistor—220 ohms, insulated wire wound, 1.1 watt (R12)
11298	Resistor—5,600 ohms, carbon type, 1 watt (R5)
14559	Resistor—10,000 ohms, insulated, ½ watt (R17)
30151	Resistor—18,000 ohms, insulated, 1 watt (R3, R32) (R32—Model 87T1 only)
14284	Resistor—22,000 ohms, carbon type, 1/10 watt (R7)
12454	Resistor—33,000 ohms, insulated, ½ watt (R1)
11323	Resistor—270,000 ohms, carbon type, ½ watt (R10)

STOCK No.	DESCRIPTION
13005	Resistor—390,000 ohms, carbon type, 1/10 watt (R11)
11452	Resistor—470,000 ohms, carbon type, 1/10 watt (R2)
12013	Resistor—1 meg., carbon type, 1/10 watt (R31) (Model 87T1 only)
12679	Resistor—2.2 meg., insulated, ½ watt (R4, R9)
11626	Resistor—2.2 meg., carbon type, ½ watt (R30) (Model 87T1 only)
30582	Retainer—Band-indicator disc retainer
14343	Ring—Retaining ring for range switch shaft
14350	Screw—No. 8-32 x 3/16 in. square-head set screw for drum, Stock No. 30584, arm, Stock No. 14380, and pulley, Stock No. 30587
14340	Shaft—Drive pulley and knob shaft—fastens on range switch shaft
12008	Shield—I.F. transformer shield can
11196	Socket—8-contact Radiotron socket
14114	Socket—Dial-lamp socket
13871	Socket—Tuning-tube socket complete—less cable (Model 87T1 only)
12007	Spring—Retaining spring for core, Stock No. 12006
30585	Spring—Tension spring for pointer cord
30588	Spring—Tension spring for idler pulley
30576	Switch—Range switch (S1, S2)
30574	Tone control and power switch (R18, S4)
14376	Transformer—First I.F. transformer (L10, L11, C14, C15)
14308	Transformer—Second I.F. transformer (L12, L13, C19, C27, C28, R7)
30571	Transformer—Power transformer, 105-125 volts, 25-60 cycle (T1)
30617	Transformer—Power transformer, 105-125 and 200-250 volts, 50-60 cycle (T1)
30575	Volume Control (R8)
	REPRODUCER ASSEMBLIES
14614	Cone—Reproducer cone and dust cap (for speaker marked 84091-1 or 84001-3) (L14)
14934	Cone—Reproducer cone and dust cap (for speaker marked 84091-2 or 84001-6) (L14)
14613	Reproducer complete (marked 84001-3 or 6 but interchangeable with speaker marked 84091-1 or 2)
14615	Transformer—Output transformer (for speaker marked 84091-1 or 84001-3) (T2)
14935	Transformer—Output transformer (for speaker marked 84091-2 or 84001-6) (T2)
	MISCELLANEOUS ASSEMBLIES
30595	Bracket—Tuning-tube mounting bracket and clip (Model 87T1 only)
30593	Escutcheon—Dial escutcheon and crystal (Model 86T3 only)
30594	Escutcheon—Dial and tuning-tube escutcheon and crystal (Model 87T1 only)
14359	Knob—Station selector knob
14269	Knob—Tone control, volume control, or range switch knob
14267	Screw—Chassis-mounting screw and washer assembly
14270	Spring—Retaining spring for knob, Stock No. 14269
4982	Spring—Retaining spring for knob, Stock No. 14359

©John F. Rider, Publisher

MODELS 86T3,87T1
Schematic,Socket
Trimmers,Notes

RCA MFG. CO., INC.

POWER OUTPUT
Undistorted..... 2.2 watts
Maximum..... 4.5 watts

LOUDSPEAKER
Type..... 6-inch Electrodynamic
V.C. Impedance..... {84091—1 / 84001—3} 2.6 ohms at 400 cycles
{84091—2 / 84001—6} 4.7 ohms at 400 cycles

SPEAKER RESISTANCES				
TYPE	L14	L16 T2 PRI.	T2 SEC	
84091-1 84001-3	2.4	0.16	520	0.37
84091-2 84001-6	4.5	0.22	700	0.5

IF PEAK 460 KC

Loudspeaker.—Centering of the loudspeaker is made in the usual manner with three narrow celluloid or paper feelers after first removing the front dust cover. This may be removed by softening its cement with a light application of acetone, using care not to allow the acetone to flow into the air gap. A dust cover should be cemented in place with ambroid upon completion of adjustment.

Phonograph Attachment.—A terminal board is provided for connecting a phonograph into the audio amplifying circuit. RCA Victor Models R-93, R-93-A, R-93-2, or R-94 Record Players should be connected as follows: Open link between terminals 1 and 2 on terminal board. Connect yellow wire in Radio-Record switch cable to terminal 1, green to terminal 2, and shield extension to terminal 3. Tape unused red and blue leads separately. Connect a 2-conductor twisted cable between the Record Player binding posts and the screw terminals on Radio-Record switch.

Precautionary Lead Dress.—(1) Keep leads from C1 as short as possible. (2) Dress yellow and green leads from range selector to oscillator coil between front apron and range selector. Maintain original length and size of the following: (3) bus lead from antenna coil L1 to range selector and (4) lead from oscillator coil to chassis.

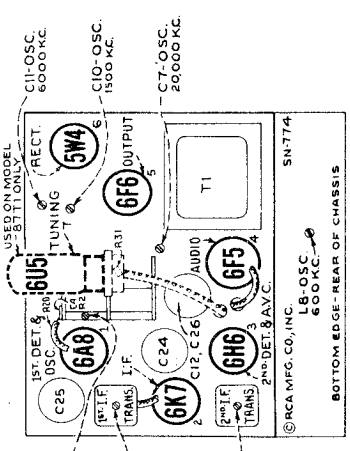

Figure 1—Radiotron, Component Part, and Trimmer Locations

Radiotron Cathode Current Readings

Measured with Milliammeter Connected at Tube Socket Cathode Terminals Under Conditions Similar to Those of Voltage Measurements

(1) RCA-6A8—1st Det.—Osc..... 12.5 ma.
(2) RCA-6K7—I-F Amp..... 7.2 ma.
(3) RCA-6H6—2nd Det. and A.V.C..... ——
(4) RCA-6F5—A-F Amp..... 0.27 ma.
(5) RCA-6F6—Output..... 38.5 ma.
(6) RCA-5W4—Rectifier..... 59 ma.**
(7) RCA-6U5—Tuning Tube..... 1.2 ma.

** Cannot be measured at socket.

©John F. Rider, Publisher

MODELS 86T3,87T1
Chassis Wiring
Voltage,Trimmers

RCA MFG. CO., INC.

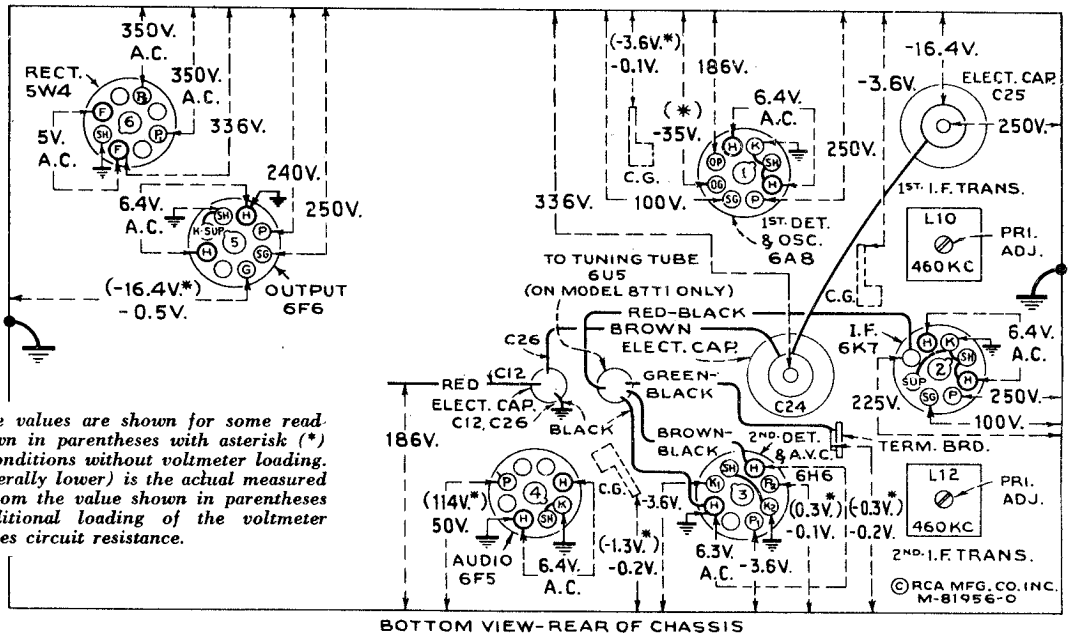

BOTTOM VIEW-REAR OF CHASSIS

Note: Two voltage values are shown for some readings. The value shown in parentheses with asterisk (*) indicates operating conditions without voltmeter loading. The other value (generally lower) is the actual measured voltage and differs from the value shown in parentheses because of the additional loading of the voltmeter through the high series circuit resistance.

Measured at 115 volts, 60-cycle supply—Tuned to approximately 1,000 kc ("Standard Broadcast")—No signal being received—Volume control minimum—Tone control optional

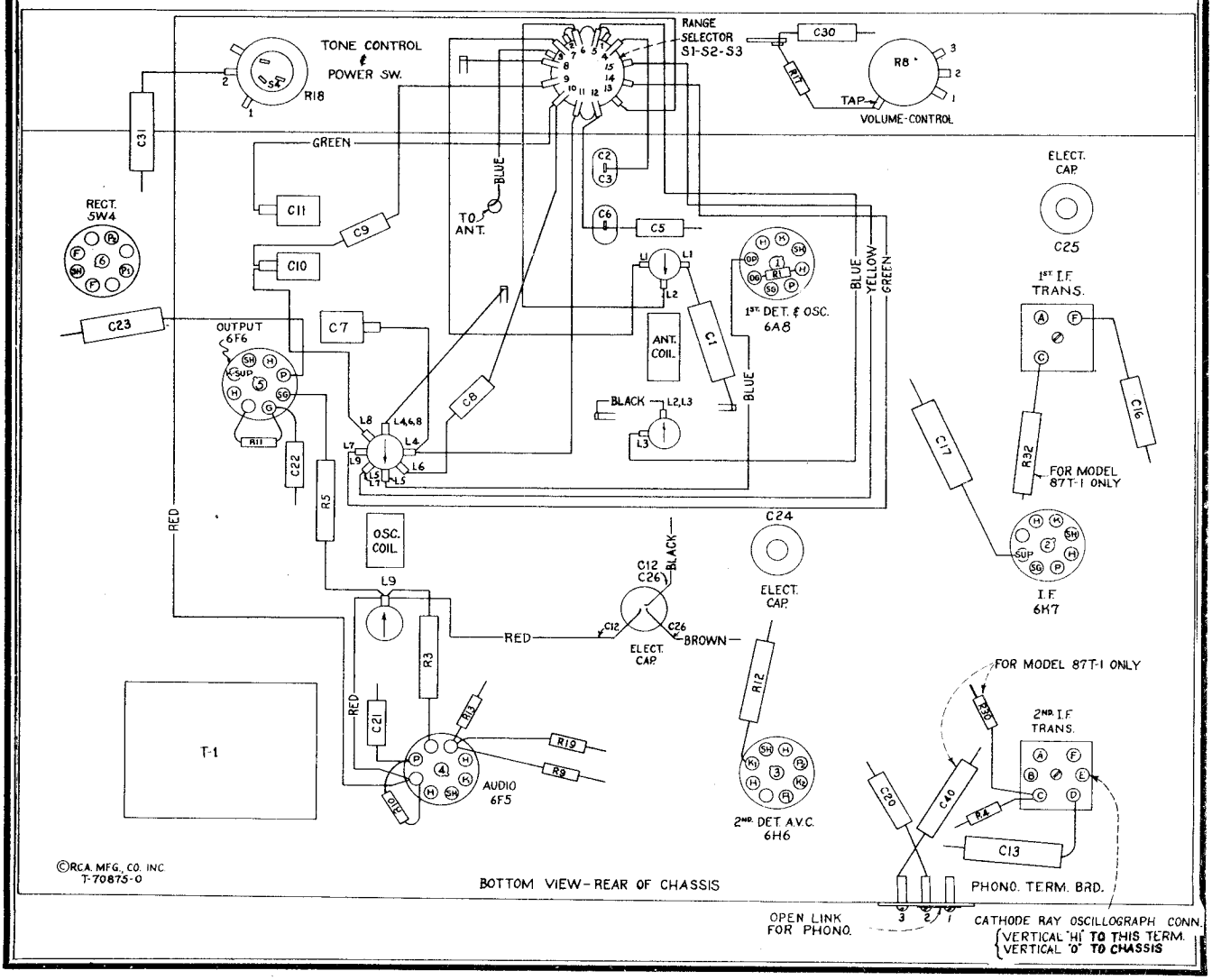

BOTTOM VIEW-REAR OF CHASSIS

©John F. Rider, Publisher

©John F. Rider, Publisher

RCA MFG. CO., INC.

MODELS
86T4
86T44

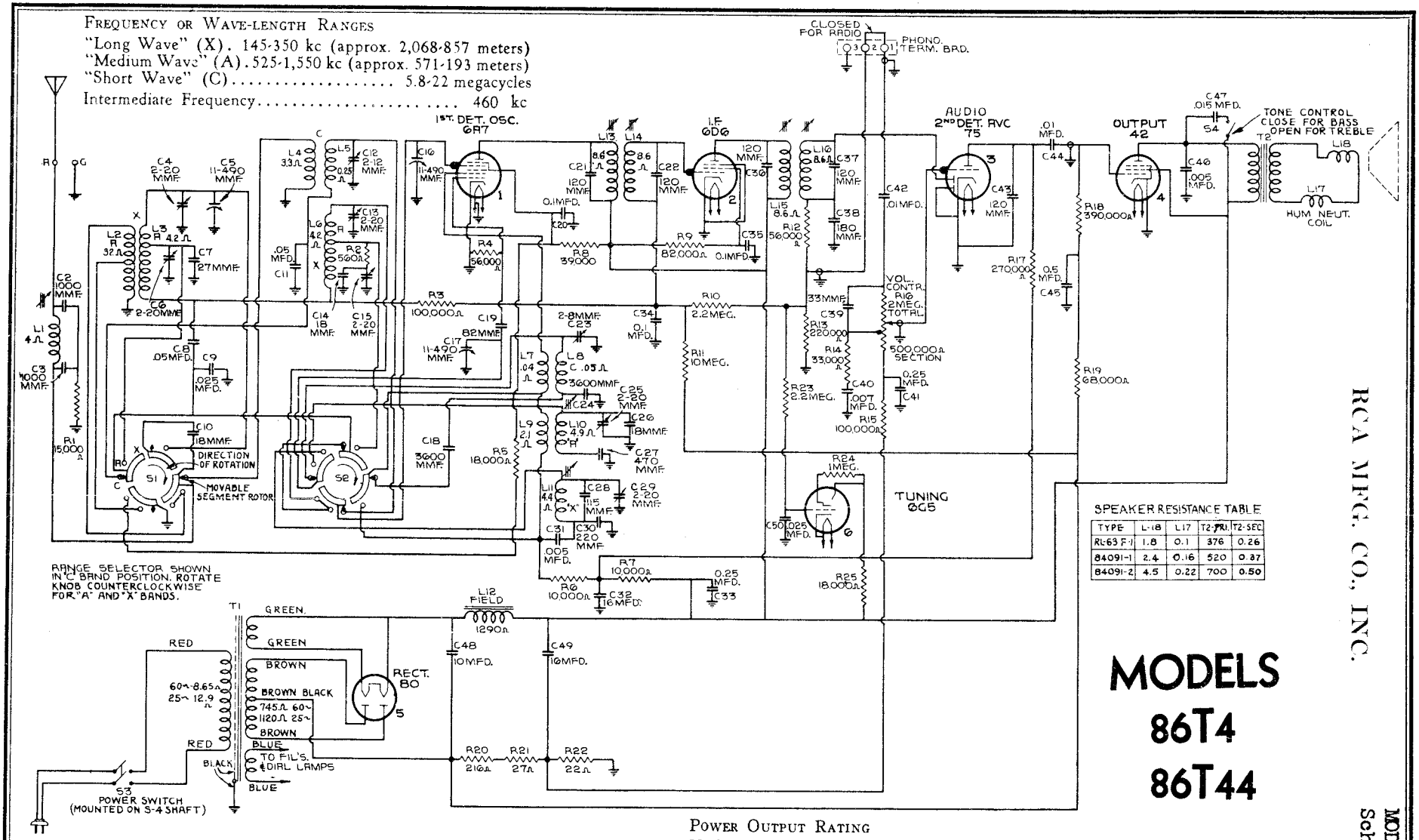

SPEAKER RESISTANCE TABLE

TYPE	L-18	L17	T2-PRI.	T2-SEC.
RL-63 F-1	1.8	0.1	376	0.26
84091-1	2.4	0.16	520	0.37
84091-2	4.5	0.22	700	0.50

Frequency or Wave-length Ranges

"Long Wave" (X). 145-350 kc (approx. 2,068-857 meters)
"Medium Wave" (A). 525-1,550 kc (approx. 571-193 meters)
"Short Wave" (C)..... 5.8-22 megacycles
Intermediate Frequency..... 460 kc

R-F Alignment Frequencies

"Short Wave" (C)..... 20,000 kc (osc., det.)
"Medium Wave" (A)..600 kc (osc.), 1,500 kc (osc., det., ant.)
"Long Wave" (X).... 175 kc (osc.), 350 kc (osc., det., ant.)

Power Supply Ratings

Rating A..... 105-125 volts, 50-60 cycles, 75 watts
Rating B..... 105-125 volts, 25-60 cycles, 75 watts
Rating C..00-130/140-160/195-250 volts, 40-60 cycles, 75 watts

Power Output Rating

Undistorted..... 2.5 watts
Maximum..... 4.5 watts

Loudspeaker

Type..... Electrodynamic
V.C. Impedance.... (RL-63F-1) 2.2— / (84091-1) 2.6— / (84091-2) 4.7— ohms at 400 cycles
Pilot Lamps (2).. Mazda No. 46, 6.3 volts, 0.25 ampere
Tuning Drive Ratio..... 20 to 1

MODELS 86T4,86T44

Chassis Wiring,Coils

RCA MFG. CO., INC.

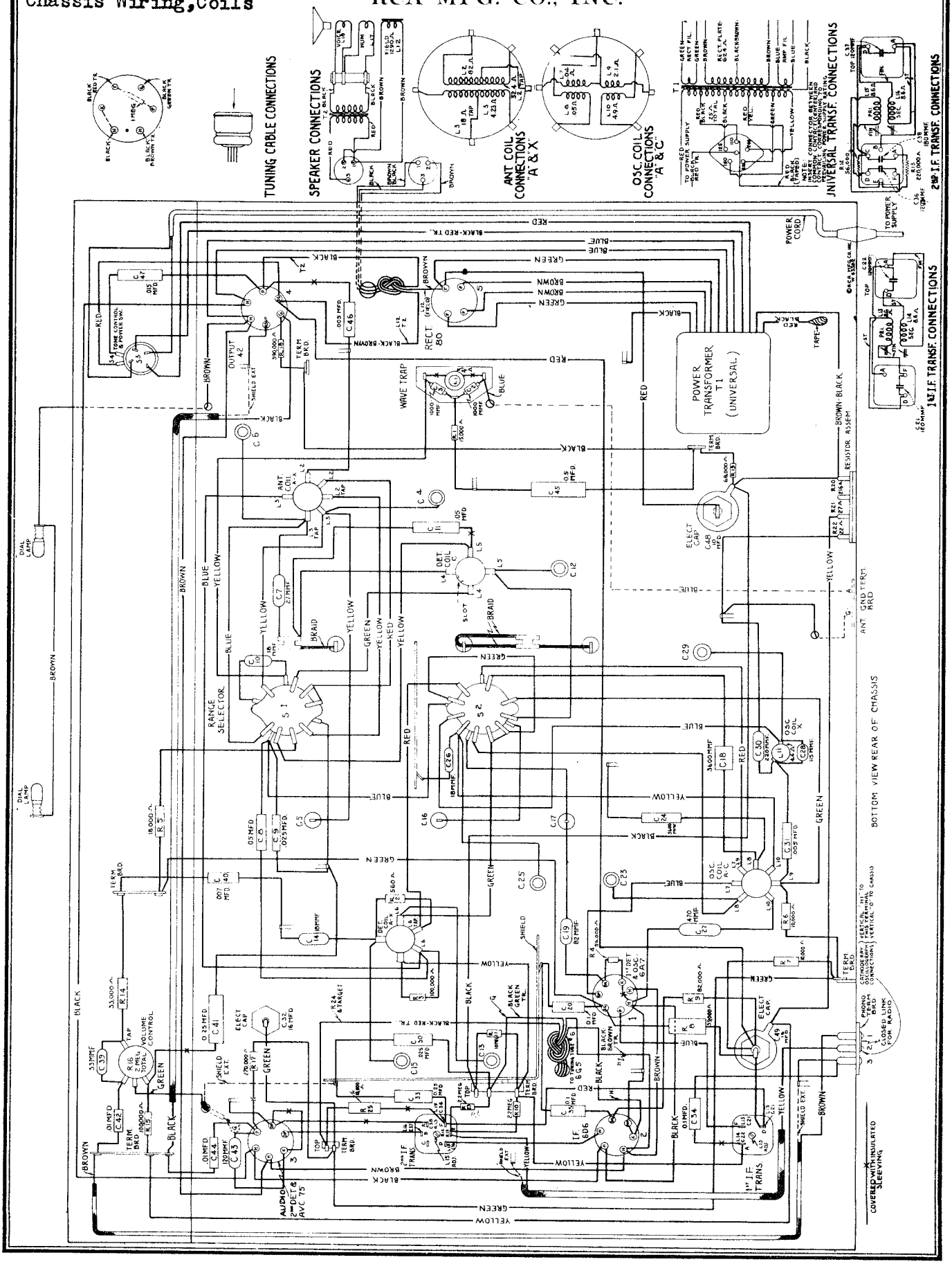

©John F. Rider, Publisher

RCA MFG. CO., INC.

MODELS 86T4, 86T44
Socket, Trimmers
Lead Dress, Voltage
Notes

The various diagrams of this booklet contain such information as will be needed to isolate causes for defective operation if such develops. The ratings of the resistors, capacitors, coils, etc., are indicated adjacent to the symbols signifying these parts on the diagrams. Identification titles such as R1, L1, C1, etc., provide reference between the illustrations and Replacement Parts List. The coils, transformer windings, and reactors are rated in terms of d-c resistance to permit continuity checks.

Precautionary Lead Dress.—Keep the following leads as short as possible: (1) Bus lead from C16 to S2, (2) bus lead from L8 to S2, (3) leads from C24 to L8 and to chassis. (4) Bus lead from L5 to S2 should be 2½ inches long between lugs and dressed away from S2, (5) bus lead from C17 to S2 should be dressed away from adjacent parts, (6) leads should be dressed away from grid lug of 42 tube, (7) C11 lead to L5 should be 1 inch long and dressed between L5 and C4, C11 lead to ground should be short, (8) green lead between opposite lugs on S2 should be dressed away from S2, (9) excess antenna lead should be dressed above chassis, (10) blue lead from L7 to 6A7 oscillator plate lug should be dressed down and away from L8 lug and away from oscillator grid of 6A7, (11) green lead from L6 to S2 should be dressed away from bus connected between C17 and S2, (12) red lead from L6 tap to S2 should be dressed away from bus connected between C17 and S2. When necessary to replace bus leads, use only wire having same diameter as original.

Phonograph Attachment.—A terminal board is provided for connecting a phonograph into the audio amplifying circuit. RCA Victor Models R-93, R-93-A, R-93-2, or R-94 Record Players should be connected as follows: Remove link between terminals 1 and 2 on terminal board. Connect green wire in Radio-Record switch cable to terminal 1, yellow to terminal 2, and shield extension to terminal 3. Tape unused red and blue leads separately. Connect a 2-conductor twisted cable between the Record Player binding posts and the screw terminals on Radio-Record switch.

Loudspeaker.—Centering of the loudspeaker is made in the usual manner with three narrow paper feelers after first removing the front dust cover. This may be removed by softening its cement with a light application of acetone, using care that the acetone does not flow into the air gap. Speakers RL-63F-1 and 84091-1 have screws for the centering adjustment, while on speaker 84091-2, it is necessary to separate the glued centering disc from the housing, insert paper feelers in air gap, then apply cement to the centering disc, press down firmly, and leave the feelers in place until the cement dries. The dust cover should be cemented back in place with ambroid after completion of the adjustment.

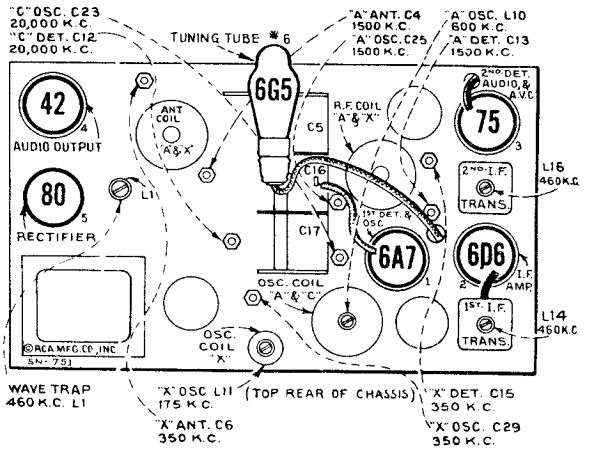

Figure 1—Radiotron, Coil, and Trimmer Locations

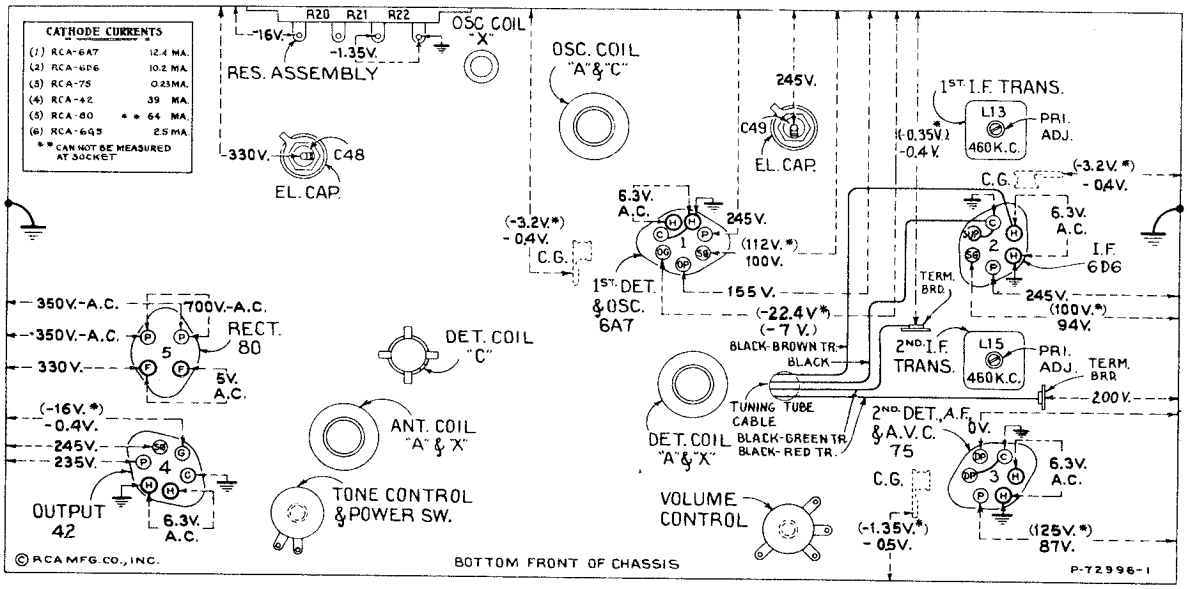

Figure 2—Radiotron Socket Voltages, Coil, and Trimmer Locations
Measured at 115 volts, 60-cycle supply—Tuned to approximately 1,000 kc or 300 meters "A" band—No signal being received—Volume control minimum

Note: Two voltage values are shown for some readings. The value shown in parentheses with asterisk (*) indicates operating conditions without voltmeter loading. The other value (generally lower) is the actual measured voltage and differs from the value shown in parentheses because of the additional loading of the voltmeter through the high series circuit resistance.

Voltage values as specified should hold within ±20% when the receiver is normally operative at its rated line voltage. To duplicate the conditions under which the voltages were measured requires a 1,000-ohm-per-volt d-c meter, having ranges of 10, 50, 250 and 500 volts. Use the nearest range above the specified measured voltage. A-c voltages were measured with a corresponding a-c meter.

©John F. Rider, Publisher

©John F. Rider, Publisher

Alignment Procedure

Calibrate the tuning dial by adjusting main dial pointer to the low-frequency (end) calibration mark on dial with the gang tuning-condenser plates in full-mesh position; then adjust the small (vernier) pointer to figure 0. These are friction adjustments.

Perform alignment in proper order, tabulated below, starting with No. 1 and following all operations across, then No. 2, etc. Adjustment locations are shown on figures 1 and 2.

Cathode-ray alignment is highly preferable; the connections to the chassis are shown on figure 4. If an output indicator is used, connect it across the loudspeaker voice-coil and advance the receiver volume control to full-volume position.

Connect the "low" output terminal of the test oscillator to the receiver "G" (ground) terminal for all alignment operations. Regulate the output of the test oscillator so that minimum signal is applied to the receiver to obtain an observable output indication. This will avoid a-v-c action.

The term "Dummy antenna" means the device which must be connected between the "high" test-oscillator output and the point of connection to the receiver in order to obtain ideal alignment. "No signal, 550-750 kc" means that the receiver should be tuned to a point between 550 and 750 kc (400-550 meters) where no signal or interference is received from a station or local (heterodyne) oscillator.

For further details on alignment, refer to booklet "RCA Victor Receiver Alignment."

Order of Alignment	Test Oscillator: Connection to Receiver	Test Oscillator: Dummy Antenna	Test Oscillator: Frequency Setting	Receiver Dial Setting	Range Selector	Circuit to Adjust	Adjustment Symbols	Adjust to Obtain
1	6D6 I-F Grid Cap	.001 Mfd.	460 kc	No Signal 550-750 kc (400-550 meters)	"A" Center	2nd I-F Trans.	L15 and L16	Max. (peak)
2	6A7 Det. Grid Cap	.001 Mfd.	460 kc	No Signal 550-750 kc (400-550 meters)	"A"	1st I-F Trans.	L13 and L14	Max. (peak)
3	Ant. Term.	200 Mmfd.	460 kc	No Signal 550-750 kc (400-550 meters)	"A"	Wave-trap	L1	Minimum Output
4	Ant. Term.	300 Ohms	20,000 kc	20 mc	"C" Right	"C" Osc.	C23	Max. (peak)*
5	Ant. Term.	300 Ohms	20,000 kc	Rock Thru 20 mc	"C"	"C" Det.	C12	Max. (peak)†‡
6	Ant. Term.	200 Mmfd.	600 kc	600 kc (500 meters)	"A" Center	"A" L-F Osc.	L10	Max. (peak)
7	Ant. Term.	200 Mmfd.	1,500 kc	1,500 kc (200 meters)	"A"	"A" H-F Osc.	C25	Max. (peak)
8	Ant. Term.	200 Mmfd.	600 kc	Rock Thru 600 kc (500 meters)	"A"	"A" L-F Osc.	L10	Max. (peak)
9	Ant. Term.	200 Mmfd.	1,500 kc	1,500 kc (200 meters)	"A"	"A" H-F Osc.	C25	Max. (peak)
10	Ant. Term.	200 Mmfd.	1,500 kc	1,500 kc (200 meters)	"A"	"A" Det.	C13	Max. (peak)
11	Ant. Term.	200 Mmfd.	1,500 kc	1,500 kc (200 meters)	"A"	"A" Ant.	C4	Max. (peak)
12	Ant. Term.	200 Mmfd.	175 kc	175 kc (1715 meters)	"X" Left	"X" L-F Osc.	L11	Max. (peak)
13	Ant. Term.	200 Mmfd.	350 kc	350 kc (857 meters)	"X"	"X" H-F Osc.	C29	Max. (peak)
14	Ant. Term.	200 Mmfd.	175 kc	Rock Thru 175 kc (1715 meters)	"X"	"X" L-F Osc.	L11	Max. (peak)
15	Ant. Term.	200 Mmfd.	350 kc	350 kc (857 meters)	"X"	"X" H-F Osc.	C29	Max. (peak)
16	Ant. Term.	200 Mmfd.	350 kc	350 kc (857 meters)	"X"	"X" Det.	C15	Max. (peak)
17	Ant. Term.	200 Mmfd.	350 kc	350 kc (857 meters)	"X"	"X" Ant.	C6	Max. (peak)

* Use minimum capacity peak if two peaks can be obtained.
† Use maximum capacity peak if two peaks can be obtained.
‡ After this adjustment, check for image signal by shifting receiver dial to 19,080 kc.

REPLACEMENT PARTS

Insist on genuine factory tested parts, which are readily identified and may be purchased from authorized dealers.

STOCK No.	DESCRIPTION
	RECEIVER ASSEMBLIES
14542	Arm—Band indicator operating arm and hub—less set screw, Stock No. 14350
12038	Band—Rubber band for tuning tube
14388	Belt—Variable condenser drive belt
13216	Board—Antenna and ground terminal board
12717	Board—Phonograph terminal board
14338	Bushing—Variable condenser mounting bushing and screw assembly
14394	Cable—Tuning tube cable and socket
12607	Cap—First I.F. transformer shield top
12581	Cap—Second I.F. transformer shield top
12118	Cap—Grid contact cap
12884	Capacitor—Adjustable trimmer (long) (C4, C6, C13, C15, C25, C29)
12714	Capacitor—Adjustable trimmer (medium) (C12)
12807	Capacitor—Adjustable trimmer (short) (C23)
12722	Capacitor—18 Mmfd. (C10, C14, C26)
13605	Capacitor—27 Mmfd. (C7)
12948	Capacitor—33 Mmfd. (C39)
12813	Capacitor—82 Mmfd. (C19)
13604	Capacitor—116 Mmfd. (C28)
12404	Capacitor—120 Mmfd. (C21, C22, C36, C37)
12724	Capacitor—120 Mmfd. (C43)
12406	Capacitor—180 Mmfd. (C38)
13602	Capacitor—220 Mmfd. (C30)
13603	Capacitor—470 Mmfd. (C27)
13593	Capacitor—1,000 Mmfd. (C2, C3)
12811	Capacitor—3,800 Mmfd. (C18, C24)
4838	Capacitor—.005 Mfd. (C31, C46)
5148	Capacitor—.007 Mfd. (C40)
13138	Capacitor—.01 Mfd. (C42, C44)
11315	Capacitor—.015 Mfd. (C47)
13606	Capacitor—.025 Mfd. (C9)
4870	Capacitor—.025 Mfd. (C50)
4886	Capacitor—.05 Mfd. (C11)
13607	Capacitor—.05 Mfd. (C8)
4839	Capacitor—0.1 Mfd. (C20, C34, C35)
13484	Capacitor—0.25 Mfd. (C33, C41)
12741	Capacitor—0.5 Mfd. (C45)
11203	Capacitor—10 Mfd. (C48)
5212	Capacitor—16 Mfd. (C49)
14377	Capacitor—16 Mfd. (C32)
13587	Coil—Antenna coil and shield—"X" and "A" bands (L2, L3)
13589	Coil—Antenna coil—"C" band only (L4, L5)
13590	Coil—Oscillator coil and shield—"X" band only (L11)
12798	Coil—Oscillator coil and shield — "A" and "C" bands (L7, L8, L9, L10)
13588	Coil—R.F. coil and shield—"X" and "A" bands (L6)
14539	Condenser—3-gang variable tuning condenser (C5, C16, C17)
5119	Connector—3-contact female connector for reproducer cable
12800	Core—Adjustable core and stud assembly for Stock No. 12798
12882	Core—Adjustable core and stud for Stock No. 13590
12006	Core—Adjustable core and stud for Stock Nos. 12652 and 12653
12664	Core—Adjustable core and stud for Stock No. 13592
14541	Dial—Station selector dial scale, complete with tuning tube escutcheon (for European use only)
14543	Dial—Band indicator dial and mounting bracket
14544	Dial—Station selector dial scale, complete with tuning tube escutcheon (for other than European use)
14540	Drive—Variable condenser vernier drive pinion gear and shaft
14345	Drum—Variable condenser drive belt drum, complete with set screws
14387	Escutcheon—Tuning tube escutcheon
11982	Fastener—Dial scale fastener
30085	Gear—Indicator drive gear and hub assembly and indicator pointer stem and gear assembly
14341	Idler—Station selector drive belt idler
14344	Indicator—Station selector indicator pointer
14382	Indicator—Vernier indicator pointer
5226	Lamp—Dial lamp
14028	Nut—Jamb nut for Stock Nos. 12884, 12807 and 12714
14340	Pulley—Station selector drive belt pulley and knob shaft
14362	Reflector—Dial reflector, lamp bracket and tuning tube mounting bracket and clamp
14343	Retainer—Drive shaft and pulley retainer—holds tuning knob shaft and pulley on range switch shaft
11324	Resistor—550 Ohms—Carbon type, ½ watt (R2)
3078	Resistor—10,000 Ohms—Carbon type, ½ watt (R6, R7)
13594	Resistor—15,000 Ohms—Carbon type, 1/10 watt (R1)
3219	Resistor—18,000 Ohms—Carbon type, ½ watt (R5)
14078	Resistor—18,000 Ohms—Carbon type, 1 watt (R25)
13735	Resistor—33,000 Ohms—Carbon type, ½ watt (R14)
13206	Resistor—39,000 Ohms—Carbon type, 2 watt (R8)
5029	Resistor—56,000 Ohms—Carbon type, ½ watt (R4)
11282	Resistor—56,000 Ohms—Carbon type, 1/10 watt (R12)
12333	Resistor—68,000 Ohms—Carbon type, ½ watt (R19)
8064	Resistor—82,000 Ohms—Carbon type, ½ watt (R9)
5145	Resistor—100,000 Ohms—Carbon type, ½ watt (R3, R15)
11398	Resistor—220,000 Ohms—Carbon type, 1/10 watt (R13)
12199	Resistor—270,000 Ohms—Insulated, ½ watt (R17)
13479	Resistor—390,000 Ohms—Carbon type, ½ watt (R18)
12013	Resistor—1 Megohm—Carbon type, 1/10 watt (R24)
12679	Resistor—2.2 Megohm—Insulated, ½ watt (R10, R23)
13601	Res.stor—10 Megohm—Insulated, ½ watt (R11)
12004	Resistor—Voltage divider—Comprising one 216 ohm, one 27 ohm and one 22 ohm sections (R20, R21, R22)
14350	Screw—No. 8-32 x 3/16 square head set screw for gear, Stock No. 14365, and drum, Stock No. 14345, and arm, Stock No. 14542
12710	Shield—Coil shield for Stock Nos. 13587 and 13588
12799	Shield—Coil shield for Stock No. 12798
12883	Shield—Coil shield for Stock No. 13590
12008	Shield—I.F. transformer shield
12798	Shield—Oscillator coil and shield—"A" and "C" bands (L7, L8, L9, L10)
3682	Shield—6A7, or 75 Radiotron shield
4233	Shield—6D6 Radiotron shield
11383	Shield—42 Radiotron shield
14114	Socket—Dial lamp socket
4794	Socket—4-contact 80 Radiotron socket
4786	Socket—6-contact 42, 75 or 6D6 Radiotron socket
4787	Socket—7-contact 6A7 Radiotron socket
12007	Spring—Retaining spring for core, Stock Nos. 12006, 12664 and 12882
12907	Spring—Tension spring for indicator drive gear, Stock No. 14365
14342	Spring—Tension spring for idler, Stock No. 14341
14537	Switch—Range switch (S1, S2)
14538	Switch—Tone and power switch (S3, S4)
12652	Transformer—First I.F. transformer (L13, L14, C21, C22)
12653	Transformer—Second I.F. transformer (L15, L16, C36, C37, C38, R12, R13)
13392	Transformer—Power transformer—105-125 volts, 50-60 cycles (T1)
13566	Transformer—Power transformer—105-125 volts, 25-60 cycles (T1)
12646	Transformer—Power transformer—100-130/140-160/195-250 volts, 50-60 cycles (T1)
13592	Trap—Wave trap (L1)
14335	Volume Control (R16)
14379	Washer—Felt washer for indicator pointer
	REPRODUCER ASSEMBLIES
	Model 86T4 (Speaker No. RL-63F-1)
14356	Board—3-contact reproducer terminal board
15866	Cap—Cone center dust cap
12012	Coil—Field coil (L12)
11469	Coil—Hum neutralizing coil (L17)
12642	Cone—Reproducer cone and dust cap (L18)
5118	Plug—3-contact male plug for reproducer
14360	Reproducer—Reproducer complete
14358	Screw—Screw, washer and lockwasher to hold core in yoke
14355	Transformer—Output transformer (T2)
14357	Washer—Spring washer to hold field coil
	Model 86T44 (Speaker No. 84091-1)
14616	Coil—Reproducer field coil (L12, L17)
14614	Cone—Reproducer cone and voice coil (L18)
5118	Plug—3-contact male plug
14613	Reproducer—Complete
14615	Transformer—Output transformer (T2)
	MISCELLANEOUS ASSEMBLIES
14396	Escutcheon—Station selector escutcheon and crystal
14269	Knob—Volume control, tone control or range switch knob
14359	Knob—Station selector knob
11377	Screw—Chassis mounting screw assembly
4982	Spring—Retaining spring for knob, Stock No. 14359
14270	Spring—Retaining spring for knob, Stock No. 14269

General Description

These receivers are of the superheterodyne type and have many distinctive features. The circuit arrangement is shown in the Schematic Circuit Diagram. Their design include magnetite core adjustments for i-f transformers, low-frequency "X" and "A" oscillator tracking, and wave-trap; pre-selector stage on "A" and "X" bands; aural compensated volume control; tone control; resistance-coupled audio system; phonograph terminal board; and a dust-proof electrodynamic loudspeaker.

RCA MFG. CO., INC.

MODEL 86T6
Schematic, Socket Trimmers, Specs. Transformer Data

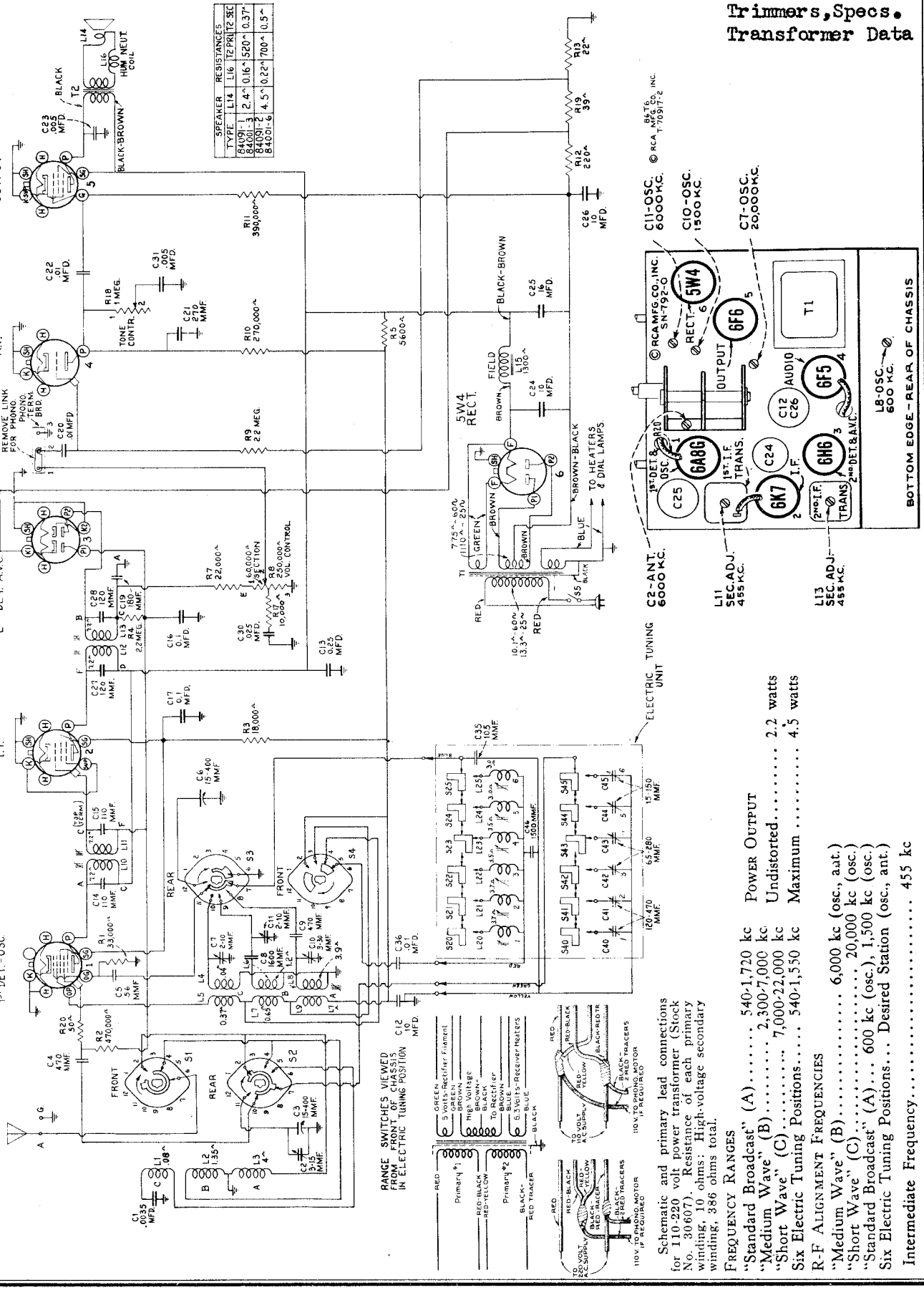

Schematic and primary lead connections for 110-220 volt power transformer (Stock No. 30607). Resistance of each primary winding, 10 ohms: High-voltage secondary winding, 386 ohms total.

FREQUENCY RANGES

"Standard Broadcast" (A)..... 540-1,720 kc
"Medium Wave" (B)..... 2,300-7,000 kc
"Short Wave" (C)..... 7,000-22,000 kc
Six Electric Tuning Positions..... 540-1,550 kc

POWER OUTPUT

Undistorted..... 2.2 watts
Maximum ..... 4.5 watts

R-F ALIGNMENT FREQUENCIES

"Medium Wave" (B)..... 6,000 kc (osc., ant.)
"Short Wave" (C)..... 20,000 kc (osc.)
"Standard Broadcast" (A)... 600 kc (osc.), 1,500 kc (osc.)
Six Electric Tuning Positions... Desired Station (osc., ant.)
Intermediate Frequency..... 455 kc

©John F. Rider, Publisher

MODEL 86T6
Chassis Wiring
Lead Dress, Phono.

RCA MFG. CO., INC.

Pilot Lamps (2)..... Mazda No. 46, 6.3 volts, 0.25 amp.

POWER SUPPLY RATINGS

Rating A—105-125 volts, 50-60 cycles..... 75 watts
Rating B—105-125 volts, 25-60 cycles..... 75 watts
Rating C—100-130/200-250 volts, 50-60 cycles..... 75 watts

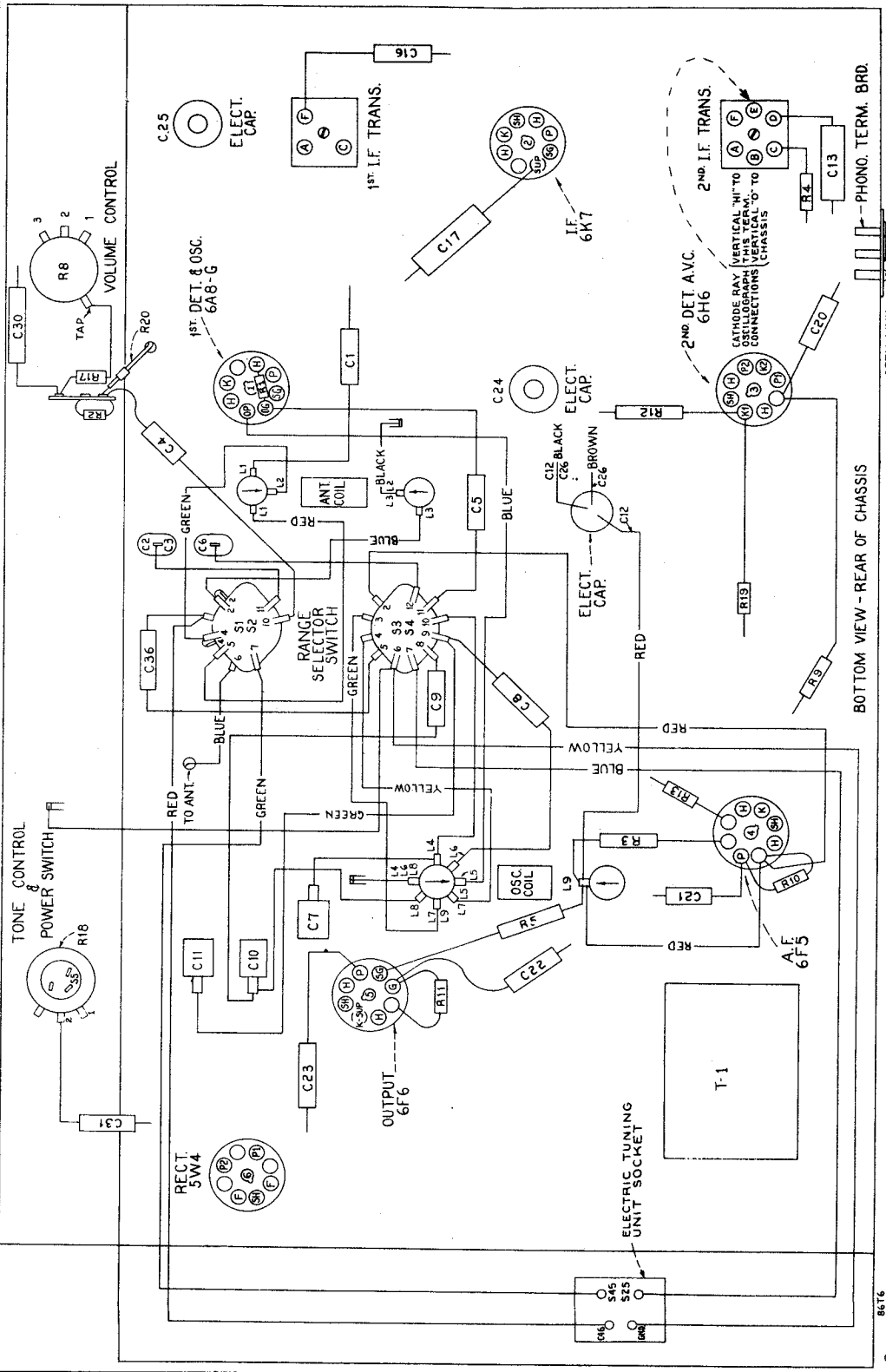

© RCA MFG. CO. INC.
B6T6
T-70922-0

Precautionary Lead Dress.—(1) 6F5 grid lead should be dressed away from adjacent electrolytic, C-12. (2) Leads from push-button socket on side apron must be twisted and dressed away from chassis. Maintain original length, size, and position of: (3) C-band antenna lead; (4) Antenna series condenser, C-1, lead; (5) C-band oscillator leads to range switch and chassis; (6) Oscillator plate lead to range switch.

LOUDSPEAKER

Type..... 6-inch Electrodynamic
Voice coil impedance at 400 cycles.. { 2.5 ohms—84091—1 / 4.7 ohms—84091—2

Phonograph Attachment.—A terminal board is provided for connecting a phonograph into the audio amplifying circuit. RCA Victor Models R-93, R-93-A, R-93-2, or R-94 Record Players should be connected as follows: Open link between terminals 1 and 2 on terminal board. Connect yellow wire in Radio-Record switch cable to terminal 1, green to terminal 2, and shield extension to terminal 3. Tape unused red and blue leads separately. Connect a 2-conductor twisted cable between the Record Player binding posts and the screw terminals on Radio-Record switch.

©John F. Rider, Publisher

RCA MFG. CO., INC.

MODEL 86T6
Voltage, Trimmers
Tuner

Adjustments for Electric Tuning

Each push-button connects a particular oscillator coil and antenna trimmer condenser. The tuning of this coil and this condenser selects a station. Clockwise rotation of cores or trimmer screws lowers frequency.

The frequency ranges for various push-buttons are:

No. 1 540 to 1,160 kc — Adjust L-20 and C-40.
No. 2 540 to 1,160 kc — Adjust L-21 and C-41.
No. 3 600 to 1,265 kc — Adjust L-22 and C-42.
No. 4 600 to 1,265 kc — Adjust L-23 and C-43.
No. 5 785 to 1,550 kc — Adjust L-24 and C-44.
No. 6 785 to 1,550 kc — Adjust L-25 and C-45.

The following are the steps in aligning a push-button selector:

Begin at low-frequency end of band, and tune selected stations in the order that they would come on dial. Use one or two feet of wire as an antenna to ensure sharp peaking.

(1) Manually tune to desired station, then turn range selector to "Electric Tuning."

(2) Press a push-button whose frequency range includes the station.

(3) Adjust oscillator coil corresponding to that push-button, to receive the desired station. Screw core all the way in, to lowest frequency, then unscrew slowly until station is found.

(4) Adjust antenna condenser for that push-button, to receive the desired station with maximum volume.

(5) Check alignment by switching to manual tuning: Reception will not change appreciably if alignment is correct.

(6) Make a final careful adjustment of all magnetite cores and trimmers.

***Note:** Two voltage values are shown for some readings. The value shown in parentheses with asterisk (*) indicates operating conditions without voltmeter loading. The other value (generally lower) is the actual measured voltage and differs from the value shown in parentheses because of the additional loading of the voltmeter through the high series circuit resistance.*

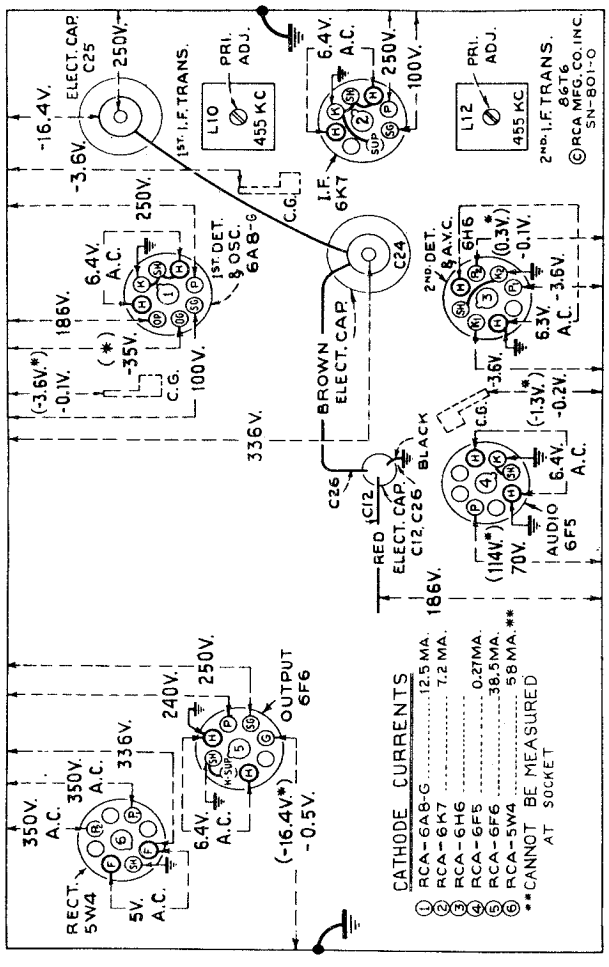

Figure 1—Radiotron Socket Voltages and Trimmer Locations

Measured at 117 volts, 60-cycle supply—Tuned to approximately 1,000 kc ("Standard Broadcast")—No signal being received—Volume control minimum—Tone control optional

With the gang tuning-condenser plates in full-mesh position, adjust the pointer to the low-frequency (end) calibration mark on the dial scale. The pointer is soldered in place on the drive cable.

Perform alignment in proper order, tabulated below, starting with No. 1 and following all operations across, then No. 2, etc. Adjustment locations are shown on figures 1 and 2.

Cathode-ray alignment is preferable; the connections to the chassis are shown on figure 4. If an output indicator is used, connect it across the loudspeaker voice-coil. Advance the receiver volume control to full-volume position.

Connect the "low" output terminal of the test oscillator to the receiver "G" (ground) terminal for all alignment operations. Regulate the output of the test oscillator so that minimum signal is applied to the receiver to obtain an observable output indication. This will avoid a-v-c action.

The term "Dummy antenna" means the device which must be connected between the "high" test-oscillator output and the point of connection to the receiver in order to obtain ideal alignment. "No signal, 550-750 kc" means that the receiver should be tuned to a point between 550 and 750 kc where no signal or interference is received from a station or local (heterodyne) oscillator.

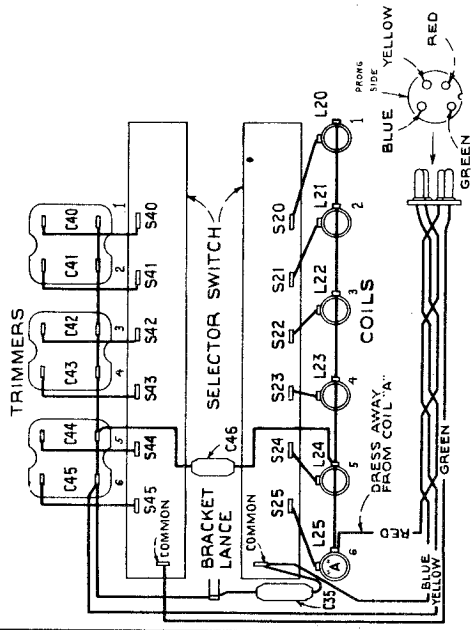

Figure 3—Wiring Diagram of Electric Tuning Unit

©John F. Rider, Publisher

MODEL 86T6
Alignment
Parts

RCA MFG. CO., INC.

Order of Alignment	Test Oscillator: Connection to Receiver	Test Oscillator: Dummy Antenna	Test Oscillator: Frequency Setting	Range Selector	Receiver Dial Setting	Circuit to Adjust	Adjustment Symbols	Adjust to Obtain
1	6K7 I-F Grid Cap	.001 Mfd.	455 kc	"A" Left	No Signal 550-750 kc	2nd I-F Trans.	L12 and L13	Max. (peak)
2	6A8 Det. Grid Cap	.001 Mfd.	455 kc	"A"	No Signal 550-750 kc	1st I-F Trans.	L10 and L11	Max. (peak)
3	Ant. Term.	300 Ohms	6,000 kc	"B" Center	6.0 mc	"B" Osc.	C11	Max. (peak)*
4	Ant. Term.	300 Ohms	6,000 kc	"B"	6.0 mc	"B" Ant.	C2	Max. (peak)†
5	Ant. Term.	300 Ohms	20,000 kc	"C" Right	20.0 mc	"C" Osc.	C7	Max. (peak)‡
6	Ant. Term.	200 Mmfd.	600 kc	"A"	600 kc	"A" L-F Osc.	L8	Max. (peak)
7	Ant. Term.	200 Mmfd.	1,500 kc	"A"	1,500 kc	"A" H-F Osc.	C10	Max. (peak)
8	Ant. Term.	200 Mmfd.	600 kc	"A"	600 kc	"A" L-F Osc.	L8	Max. (peak)
9	Ant. Term.	200 Mmfd.	1,500 kc	"A"	1,500 kc	"A" H-F Osc.	C10	Max. (peak)
10	Set up electric tuning as outlined under "Adjustments for Electric Tuning."							

* Use minimum capacity peak if two peaks can be obtained.

† After this adjustment, check for image signal by shifting receiver dial to 5.09 mc.

‡ Use maximum capacity peak if two peaks can be obtained. After this adjustment, check for image signal by shifting receiver dial to 20.91 mc.

Note that the heterodyne oscillator tracks above the signal frequency on bands "A" and "B," and below the signal frequency on band "C."

STOCK No.	DESCRIPTION	Unit List Price
	RECEIVER ASSEMBLIES	
14380	Arm—Hub and arm for operating band indicator shutter—fastens on range switch shaft	.30
14352	Belt—Station selector drive belt	.14
13216	Board—Antenna and ground terminal board	.25
12717	Board—Phonograph terminal board	.22
12607	Cap—Top shield cap for first I.F. transformer	.20
12581	Cap—Top shield cap for second I.F. transformer	.20
11350	Cap—Grid contact cap (C5)	.25
12723	Capacitor—56 Mmfd. (C14, C15)	.25
14262	Capacitor—110 Mmfd. (C14, C15)	.30
12404	Capacitor—120 Mmfd. (C27, C28)	.30
12406	Capacitor—180 Mmfd. (C19)	.25
12488	Capacitor—270 Mmfd. (C21)	.25
30433	Capacitor—470 Mmfd. (C4, C9)	.30
30592	Capacitor—1,600 Mmfd. (C8)	.35
30303	Capacitor—.0035 Mfd. (C1)	.40
4838	Capacitor—.005 Mfd. (C23, C31)	.25
14393	Capacitor—.01 Mfd. (C20, C22)	.30
4858	Capacitor—.01 Mfd. (C38)	.25
4870	Capacitor—.025 Mfd. (C30)	.20
4839	Capacitor—0.1 Mfd. (C16, C17)	.30
12484	Capacitor—0.25 Mfd. (C13)	.30
11203	Capacitor—10 Mfd. (C24)	1.15
30577	Capacitor Pack—Comprising two sections each 10 Mfd. (C12, C26)	1.60
5212	Capacitor—16 Mfd. (C25)	1.35
4358	Clamp—Mounting clamp for capacitor pack, Stock No. 30577	.15
30578	Coil—Antenna coil (L1, L2, L3)	1.35
30579	Coil—Oscillator coil (L4, L5, L6, L7, L8, L9)	1.40
30573	Condenser—2-gang variable tuning condenser (C2, C3, C8)	3.90
30580	Condenser—3-gang mica trimmer—two sections each 2-10 Mmfd., one section 3-30 Mmfd. (C7, C10, C11)	.55
30586	Cord—Station-selector indicator pointer cord	.37
12800	Core—Adjustable core and stud for oscillator coil	.35
12006	Core—Adjustable core and stud for I.F. transformer	.15
30589	Dial—Station-selector dial scale	.65
31028	Disc—Band indicator disc, complete with operating hub and arm, and connecting link	1.15
30572	Drive—Vernier drive shaft and pinion gear for variable condenser	.75
30584	Drum—Station-selector drive-cord drum with set screws	.60
30583	Indicator—Station-selector indicator pointer and holder assembly	.15
5226	Lamp—Dial lamp	.17
30587	Pulley—Drive-belt pulley for condenser shaft	.45
14636	Pulley—Drive-belt idler pulley	.15
14525	Resistor—22 ohms, carbon type, ½ watt (R13)	.20
30590	Resistor—39 ohms, carbon type, ½ watt (R19)	.20
30771	Resistor—50 ohms, flexible type, 1/10 watt (R20)	.20
30591	Resistor—220 ohms, insulated wire wound, 1.1 watt (R12)	.20
11298	Resistor—5,600 ohms, carbon type, 1 watt (R5)	.22
14559	Resistor—10,000 ohms, insulated, ½ watt (R17)	.20
30151	Resistor—18,000 ohms, insulated, 1 watt (R3)	.22
14284	Resistor—22,000 ohms, carbon type, 1/10 watt (P7)	.15
12454	Resistor—33,000 ohms, insulated, ½ watt (R1)	.20
11323	Resistor—270,000 ohms, carbon type, ½ watt (R10)	.20
13005	Resistor—390,000 ohms, carbon type, 1/10 watt (R11)	.15
11452	Resistor—470,000 ohms, carbon type, 1/10 watt (R2)	.15
12679	Resistor—2.2 meg., insulated, ½ watt (R4, R9)	.20
14887	Retainer—Band-indicator disc retainer	.01
14343	Ring—Retaining ring for range switch shaft	.02
14350	Screw—No. 8-32 x 3/16 in. square-head set screw for drum, Stock No. 30584, arm, Stock No. 14380, and pulley, Stock No. 30587	.03
14340	Shaft—Drive pulley and knob shaft—fastens on range switch shaft	.40
12008	Shield—I.F. transformer shield can	.40
11196	Socket—8-contact Radiotron socket	.25
310027	Socket—4-contact female socket for electric tuning unit cable plug	.20
14114	Socket—Dial-lamp socket	.25
12007	Spring—Retaining spring for core, Stock No. 12006	.02
30585	Spring—Tension spring for pointer cord	.06
30588	Spring—Tension spring for idler pulley	.07
31025	Switch—Range switch (S1, S2, S3, S4)	1.40
30574	Tone control and power switch (R18, S5)	1.50
14376	Transformer—First I.F. transformer (L10, L11, C14, C15)	2.45
14308	Transformer—Second I.F. transformer (L12, L13, C19, C27, C28, R7)	2.90
30571	Transformer—Power transformer, 105-125 volts, 25-60 cycle (T1)	9.50
30607	Transformer—Power transformer, 105-125 and 200-250 volts, 50-60 cycle (T1)	7.25
30575	Volume Control (R8)	1.00
	REPRODUCER ASSEMBLIES	
13677	Cone—Reproducer cone and dust cap (for speaker marked 84091-1 or 84001-3) (L14)	1.75
14934	Cone—Reproducer cone and dust cap (for speaker marked 84091-2 or 84001-6) (L14)	2.00
14613	Reproducer complete (marked 84001-3 or 6 but interchangeable with speaker marked 84091-1 or 2)	5.75
14615	Transformer—Output transformer (for speaker marked 84091-1 or 84001-3) (T2)	1.90
14935	Transformer—Output transformer (for speaker marked 84091-2 or 84001-6) (T2)	1.75
	MISCELLANEOUS ASSEMBLIES	
30981	Button—Push button for electric tuning switch	.10
31029	Capacitor—Adjustable trimmer 15-150 Mmfd. (C44, C45)	.40
30764	Capacitor—Adjustable trimmer 65-280 Mmfd. (C42, C43)	.45
30765	Capacitor—Adjustable trimmer 120-470 Mmfd. (C40, C41)	.50
31032	Capacitor—105 Mmfd. (C35)	.80
13762	Capacitor—1,500 Mmfd. (C46)	.35
30747	Coil—Electric tuning oscillator coil (L24, L25)	.60
30748	Coil—Electric tuning oscillator coil (L22, L23)	.60
30749	Coil—Electric tuning oscillator coil (L20, L21)	.60
30846	Core—Adjustable core and stud for electric tuning oscillator coils	.30
31095	Discs—10 celluloid protector discs for call letter markers	.10
30593	Escutcheon—Dial escutcheon and crystal	1.25
14359	Knob—Station selector knob	.20
14269	Knob—Tone control, volume control, or range switch knob	.20
31028	Marker—Station call letter markers for electric tuning push buttons	.40
30550	Plug—4-prong male plug for electric tuning unit cable	.20
14267	Screw—Chassis-mounting screw and washer assembly	.07
14270	Spring—Retaining spring for knob, Stock No. 14269	.05
4982	Spring—Retaining spring for knob, Stock No. 14359	.05
12007	Spring—Retaining spring for core, Stock No. 30846	.02
31030	Switch—Electric tuning station selector switch only—less push buttons (S20, S21, S22, S23, S24, S25, S40, S41, S42, S43, S44, S45)	3.00

ALL PRICES ARE SUBJECT TO CHANGE OR WITHDRAWAL WITHOUT NOTICE.

©John F. Rider, Publisher

MODEL 86X4
Schematic, Socket
Trimmers, Specs.

RCA MFG. CO., INC.

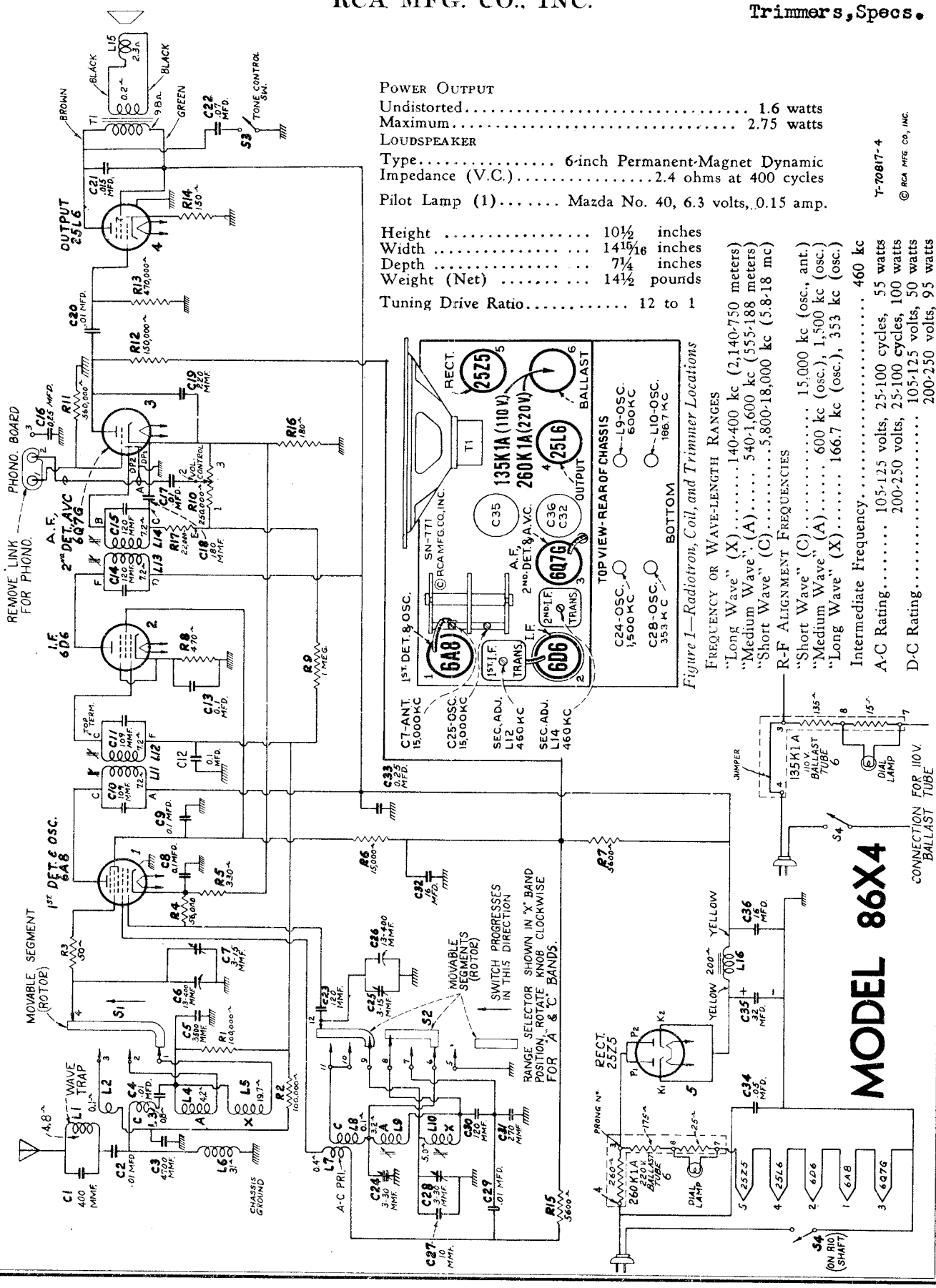

POWER OUTPUT

Undistorted	1.6 watts
Maximum	2.75 watts

LOUDSPEAKER

Type	6-inch Permanent-Magnet Dynamic
Impedance (V.C.)	2.4 ohms at 400 cycles

Pilot Lamp (1)..... Mazda No. 40, 6.3 volts, 0.15 amp.

Height	10½ inches
Width	14 15/16 inches
Depth	7¼ inches
Weight (Net)	14½ pounds

Tuning Drive Ratio..... 12 to 1

Figure 1—Radiotron, Coil, and Trimmer Locations

FREQUENCY OR WAVE-LENGTH RANGES

"Long Wave" (X)	140-400 kc (2,140-750 meters)
"Medium Wave" (A)	540-1,600 kc (555-188 meters)
"Short Wave" (C)	5,800-18,000 kc (5.8-18 mc)

R-F ALIGNMENT FREQUENCIES

"Short Wave" (C)	15,000 kc (osc., ant.)
"Medium Wave" (A)	600 kc (osc.), 1,500 kc (osc.)
"Long Wave" (X)	166.7 kc (osc.), 353 kc (osc.)
Intermediate Frequency	460 kc
A-C Rating	105-125 volts, 25-100 cycles, 55 watts 200-250 volts, 25-100 cycles, 100 watts
D-C Rating	105-125 volts, 50 watts 200-250 volts, 95 watts

T-70817-4

© RCA MFG. CO., INC.

©John F. Rider, Publisher

MODEL 86X4
Chassis Wiring

RCA MFG. CO., INC.

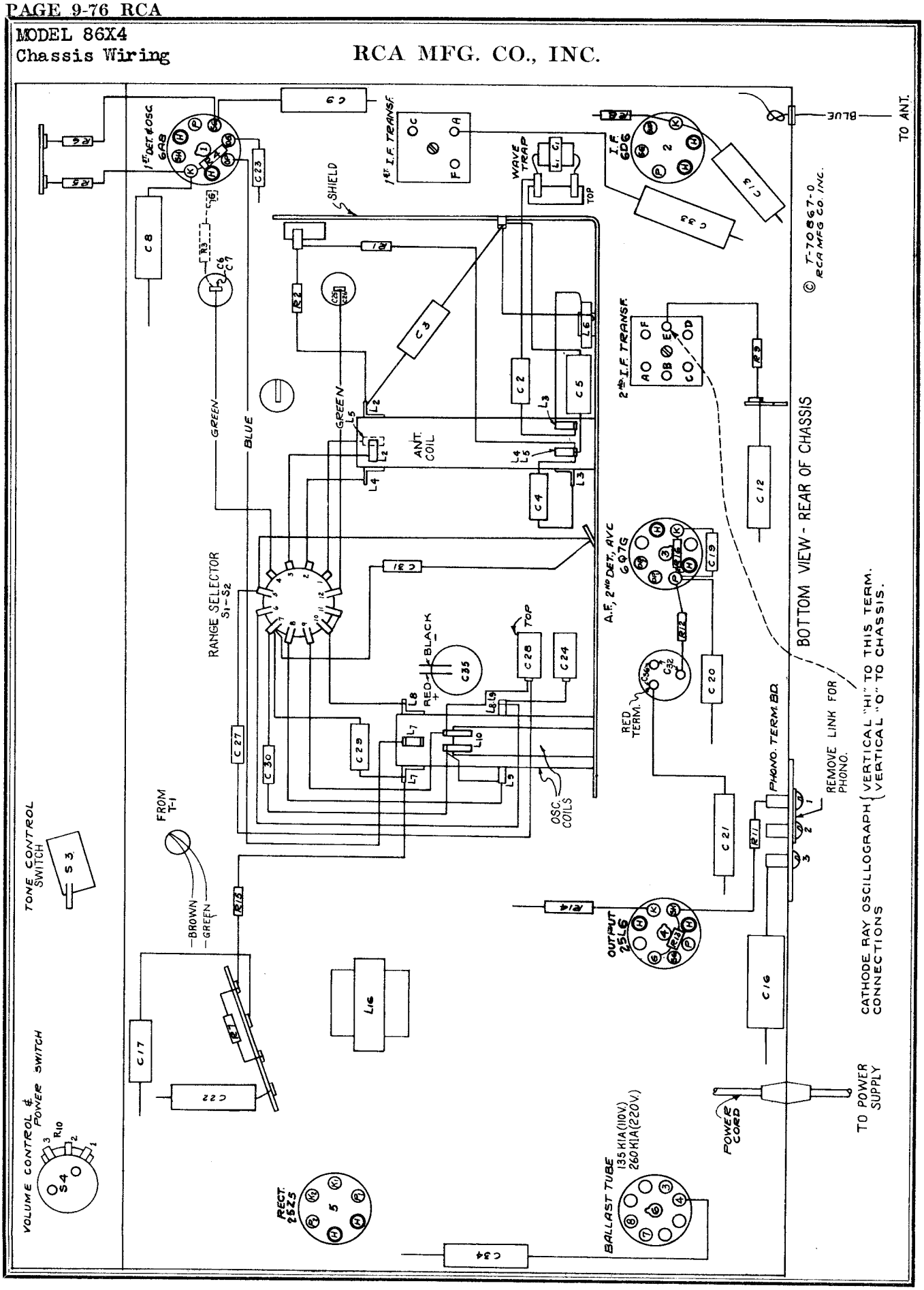

©John F. Rider, Publisher

Phono. Attachment Data

RCA MFG. CO., INC.

MODEL 86X4
Alignment
Lead Dress

Alignment Procedure

Calibrate the tuning dial by adjusting dial pointer to the center horizontal line with the gang tuning-condenser plates in full-mesh position. This is a screw-driver adjustment.

Perform alignment in proper order, tabulated below, starting with No. 1 and following all operations across, then No. 2, etc. Adjustment locations are shown on figures 1 and 2.

Cathode-ray alignment is highly preferable; the connections to the chassis are shown on figure 4. If an output indicator is used, connect it across the loudspeaker voice-coil and advance the receiver volume control to full-volume position.

Connect the "low" output terminal of the test oscillator to the receiver chassis for all alignment operations. Regulate the output of the test oscillator so that minimum signal is applied to the receiver to obtain an observable output indication. This will avoid a-v-c action.

The term "Dummy antenna" means the device which must be connected between the "high" test-oscillator output and the point of connection to the receiver in order to obtain ideal alignment. "No signal, 550-750 kc" means that the receiver should be tuned to a point between 550 and 750 kc (400-550 meters) where no signal or interference is received from a station or local (heterodyne) oscillator.

Conversion of kilocycles (kc) to meters for alignment frequencies is as follows: 15,000 kc (20 mc) = 20 meters; 1,500 kc = 200 meters; 600 kc = 500 meters; 460 kc = 652 meters; 353 kc = 850 meters; and 166.7 kc = 1,800 meters.

For further details on alignment, refer to booklet "RCA Victor Receiver Alignment."

Order of Alignment	Test Oscillator			Range Selector	Receiver Dial Setting	Circuit to Adjust	Adjustment Symbols	Adjust to Obtain
	Connection to Receiver	Dummy Antenna	Frequency Setting					
1	6D6 I-F Grid Cap	.001 Mfd.	460 kc	"A" Center	No Signal 550-750 kc (400-550 meters)	2nd I-F Trans.	L13 and L14	Max. (peak)
2	6A8 Det. Grid Cap	.001 Mfd.	460 kc	"A" Center	No Signal 550-750 kc (400-550 meters)	1st I-F Trans.	L11 and L12	Max. (peak)
3	Ant. Lead (blue)	300 Ohms	15,000 kc (20 meters)	"C" Right	15 mc	"C" Osc.	C25	Max. (peak)†
4	Ant. Lead (blue)	300 Ohms	15,000 kc (20 meters)	"C" Right	Rock Through 15 mc	"C" Ant.	C7	Max. (peak)*
5	Ant. Lead (blue)	200 Mmfd.	600 kc (500 meters)	"A" Center	600 kc (500 meters)	"A" L-F Osc.	L9	Max. (peak)‡
6	Ant. Lead (blue)	200 Mmfd.	1,500 kc (200 meters)	"A" Center	1,500 kc (200 meters)	"A" H-F Osc.	C24	Max. (peak)
7	Ant. Lead (blue)	200 Mmfd.	600 kc (500 meters)	"A" Center	600 kc (500 meters)	"A" L-F Osc.	L9	Max. (peak)
8	Ant. Lead (blue)	200 Mmfd.	1,500 kc (200 meters)	"A" Center	1,500 kc (200 meters)	"A" H-F Osc.	C24	Max. (peak)
9	Ant. Lead (blue)	200 Mmfd.	166.7 kc (1,800 meters)	"X" Left	166.7 kc (1,800 meters)	"X" L-F Osc.	L10	Max. (peak)
10	Ant. Lead (blue)	200 Mmfd.	353 kc (850 meters)	"X" Left	353 kc (850 meters)	"X" H-F Osc.	C28	Max. (peak)
11	Ant. Lead (blue)	200 Mmfd.	166.7 kc (1,800 meters)	"X" Left	166.7 kc (1,800 meters)	"X" L-F Osc.	L10	Max. (peak)
12	Ant. Lead (blue)	200 Mmfd.	353 kc (850 meters)	"X" Left	353 kc (850 meters)	"X" H-F Osc.	C28	Max. (peak)

† Use maximum capacity peak if two peaks can be obtained.
* Use minimum capacity peak if two peaks can be obtained. After this adjustment, check for image signal by shifting receiver dial to 15,920 kc.
‡ "X" H-F Osc. trimmer C28 must be at least three turns out during this adjustment.

Precautionary Lead Dress.—(1) All bus leads in r-f assembly should be kept as short as possible. When necessary to replace bus leads, use only wire having same diameter. (2) Dress capacitor, connected from tone-control switch to terminal board, away from capacitor, connected to center terminal of volume control, and away from exposed green shielded lead running to phono. term. board. (3) Dress green lead, connected from volume control to 2nd i-f transformer, as close to chassis as possible. (4) Dress capacitor, connected from 25L6 socket to red lug on electrolytic capacitor, away from phono. term. board. (5) Brown and green leads from speaker must be twisted, dressed along chassis and away from exposed green shielded lead and lug running to phono. term. board. (6) Dress green lead, connected between 6A8 and 6D6 sockets, away from pin No. 5 of 6A8 socket.

Phonograph Attachment.—A terminal board is provided for connecting a phonograph into the audio amplifying circuit. RCA Victor Models R-93, R-93-A, R-93-2, or R-94 Record Players should be connected as follows: Open link between terminals 1 and 2 on terminal board. Connect green wire in Radio-Record switch cable to terminal 1, yellow to terminal 2, and shield extension to terminal 3. Tape unused red and blue leads separately. Connect a 2-conductor twisted cable between the Record Player binding posts and the screw terminals on Radio-Record switch.

CAUTION: Disconnect receiver power cord before making phonograph connections. Tape shield extension on Radio-Record cable so it cannot make metallic connection with receiver chassis ground.

©John F. Rider, Publisher

MODEL 86X4
Voltage, Trimmers
Parts

RCA MFG. CO., INC.

Figure 2—Radiotron Socket Voltages, Coil, and Trimmer Locations

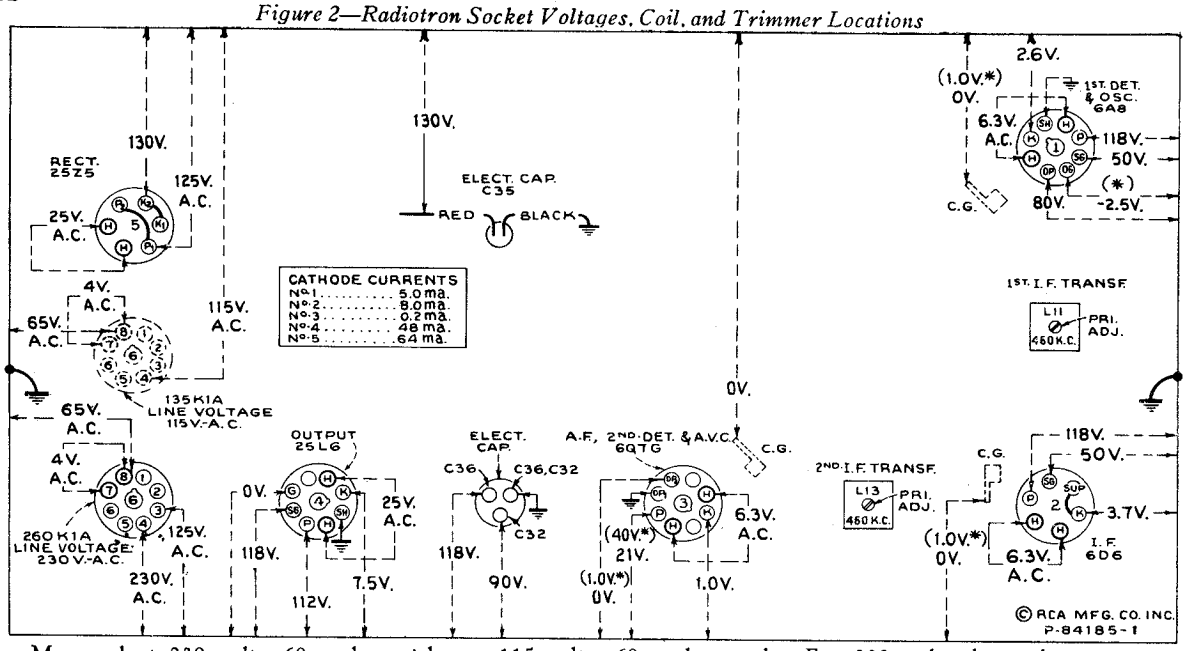

Measured at 230 volts, 60 cycle supply; or 115 volts, 60 cycle supply—For 230 volts d-c, voltages are same—For 115 volts d-c, all voltages except line and heaters about 20% lower—Tuned to approximately 1,000 kc (300 meters) "Medium Wave"—No signal being received—Volume control minimum—Tone control optional.

Note: Two voltage values are shown for some readings. The value shown in parentheses with asterisk (*) indicates operating conditions without voltmeter loading. The other value (generally lower) is the actual measured voltage and differs from the value shown in parentheses because of the additional loading of the voltmeter through the high series circuit resistance.

Voltage values as specified should hold within ±20% when the receiver is normally operative at its rated line voltage. To duplicate the conditions under which the voltages were measured requires a 1,000-ohm-per-volt d-c meter, having ranges of 10, 50, 250 and 500 volts. Use the nearest range above the specified measured voltage. A-c voltages were measured with a corresponding a-c meter.

RECEIVER ASSEMBLIES

14634	Belt—Variable condenser drive belt
14632	Bracket—Dial mounting bracket
5237	Bushing—Variable condenser rubber mounting
11350	Cap—Small grid-contact cap
30295	Capacitor—Adjustable dual trimmer (C24, C28)
13200	Capacitor—10 Mmfd. (C27)
14262	Capacitor—109 Mmfd. (C10, C11)
12404	Capacitor—120 Mmfd. (C14, C15)
12724	Capacitor—120 Mmfd. (C23, C30)
12406	Capacitor—180 Mmfd. (C18)
12694	Capacitor—220 Mmfd. (C19)
30302	Capacitor—270 Mmfd. (C31)
30303	Capacitor—.0035 Mfd. (C5)
30304	Capacitor—.0047 Mfd. (C3)
4858	Capacitor—.01 Mfd. (C2)
14393	Capacitor—.01 Mfd. (C4, C17, C20, C29)
11315	Capacitor—.015 Mfd. (C21)
4886	Capacitor—.05 Mfd. (C34)
14626	Capacitor—.07 Mfd. (C22)
4839	Capacitor—0.1 Mfd. (C8, C9, C12, C13)
12484	Capacitor—0.25 Mfd. (C16)
4840	Capacitor—0.25 Mfd. (C33)
30298	Capacitor Pack—Comprising 2 sections each 16 Mfd. (C32, C36)
30297	Capacitor—32 Mfd. (C35)
30292	Coil—Antenna coil—X, A, and C bands (L2, L3, L4, L5)
30293	Coil—Oscillator coil—A and C Bands only (L7, L8, L9)
30294	Coil—Oscillator coil—X band only (L10)
30296	Coil—Choke coil (L6)
14633	Condenser—2-gang variable tuning condenser (C6, C7, C25, C26)
14648	Core—Adjustable core and stud for coil, Stock No. 30293
12664	Core—Adjustable core and stud for coil, Stock No. 30294
12006	Core—Adjustable core and stud for i-f transformers
30289	Dial—Station selector dial scale and holder (for European use only)
30397	Dial—Station selector dial scale and holder (for other than European use)
14651	Drive—Variable condenser vernier drive and pinion gear
30290	Indicator—Station selector indicator pointer
4340	Lamp—Dial lamp
14636	Pulley—Drive belt idler pulley—less spring
14639	Pulley—Variable condenser drive pulley—located on condenser shaft
14641	Reactor—Filter reactor (L16)
30300	Resistor—Ballast resistor tube, type 260K-1A, for 220-volt operation
MI-8115	Resistor—Ballast resistor tube, type 135K-1A, for 110-volt operation
14653	Resistor—50 ohms, flexible type, 1/10 watt (R3)
30301	Resistor—150 ohms, carbon type, ½ watt (R14)
30545	Resistor—180 ohms, insulated, ½ watt (R16)
13250	Resistor—330 ohms, carbon type, ½ watt (R5)
30546	Resistor—470 ohms, insulated, ½ watt (R8)
13714	Resistor—5,600 ohms, insulated, ½ watt (R7, R15)
3998	Resistor—15,000 ohms, carbon type, ½ watt (R6)
14284	Resistor—22,000 ohms, carbon type, 1/10 watt (R17)
12286	Resistor—56,000 ohms, insulated, ½ watt (R4)
5145	Resistor—100,000 ohms, carbon type, ½ watt (R1, R2)
5027	Resistor—150,000 ohms, carbon type, ½ watt (R12)
12235	Resistor—470,000 ohms, insulated, ½ watt (R13)
5035	Resistor—560,000 ohms, carbon type, ½ watt (R11)
13730	Resistor—1 megohm, carbon type, ½ watt (R9)
4389	Screw—No. 6-32 x 3/16-inch headless set-screw for drive pulley, Stock No. 14639
14638	Shaft—Station selector knob shaft and pulley
12008	Shield—I-F transformer shield can
12581	Shield—I-F transformer shield cap
11265	Shield—Radiotron shield
4786	Socket—6-contact 6D6 or 25Z5 Radiotron socket
11196	Socket—8-contact 6A8, 6Q7G, 25L6 Radiotron or ballast resistor tube socket
14650	Socket—Dial lamp socket
14637	Spring—Idler pulley tension spring
12007	Spring—Retaining spring for core, Stock Nos. 14648, 12664 and 12006
30291	Switch—Range switch (S1, S2)
30299	Switch—Tone control switch (S3)
14376	Transformer—First I-F transformer (L11, L12, C10, C11)
14308	Transformer—Second I-F transformer (L13, L14, C14, C15, C18, R17)
13838	Trap—Wave trap (L1, C1)
14645	Volume control and power switch (R10, S4)

REPRODUCER ASSEMBLIES
(Speaker No. 84106-1)

30306	Cone—Reproducer cone, complete, centered in metal cone housing—less transformer (L15)
30305	Reproducer, complete
30307	Transformer—Output transformer (T1)

MISCELLANEOUS ASSEMBLIES

14654	Escutcheon—Station selector escutcheon and crystal
30373	Knob—Range switch knob
12673	Knob—Station selector, volume control or tone control knob
30308	Screw—Chassis mounting screw and washer assembly
4119	Screw—No. 8-32 x ¼-inch headless cup-point set-screw for knob, Stock Nos. 12673 and 30373

©John F. Rider, Publisher

MODELS 87EY, 87X, 87Y
Schematic

RCA MFG. CO., INC.

On some instruments, R15 is 68,000 ohms and R16 is 33,000 ohms.

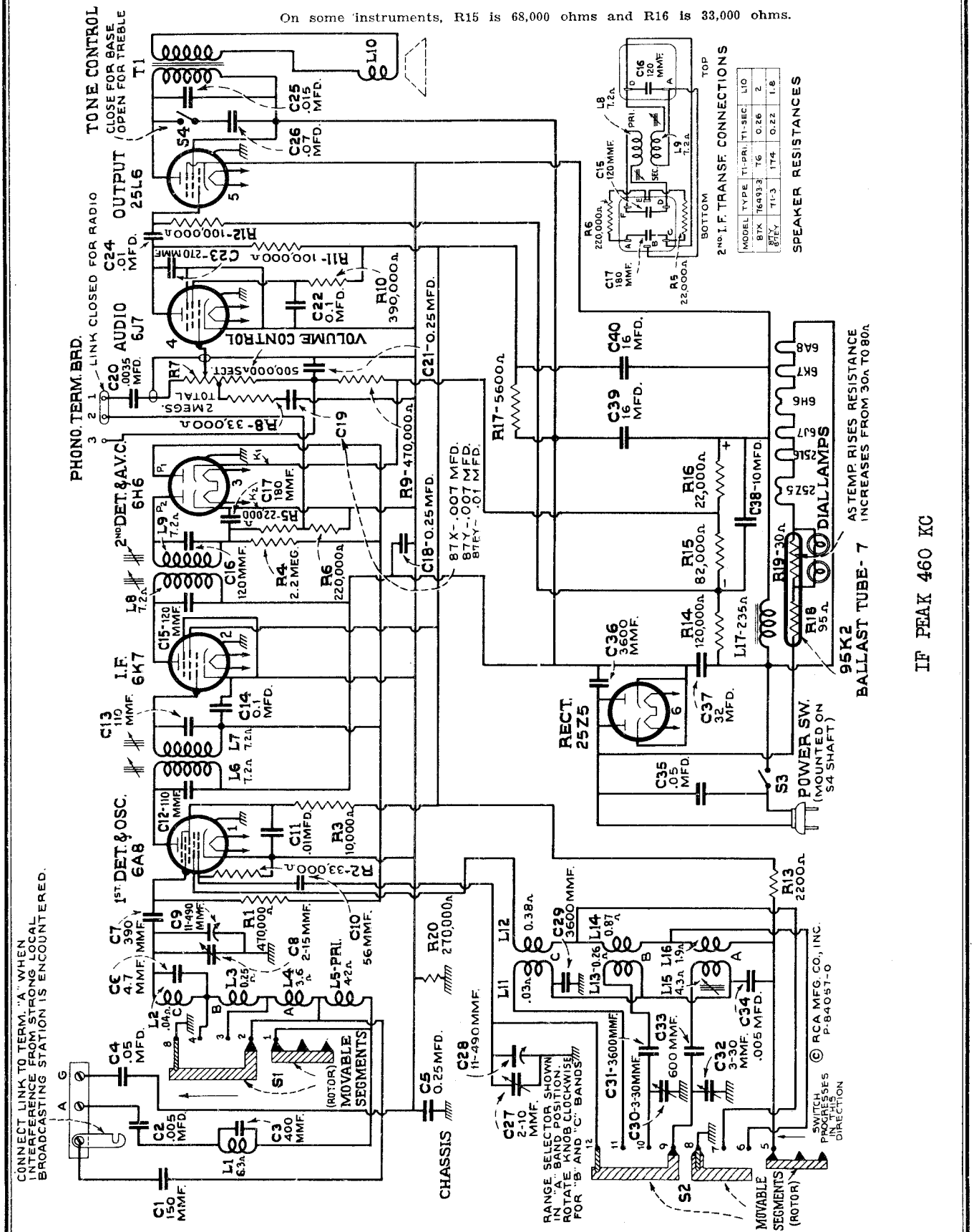

MODEL	TYPE	T1-PRI.	T1-SEC	L10
87X	76493.3	76	0.26	2
87Y, 87EY	T1-3	174	0.22	1.8

©John F. Rider, Publisher

MODELS 87EY,87X,87Y
Chassis Wiring,Coils

RCA MFG. CO., INC.

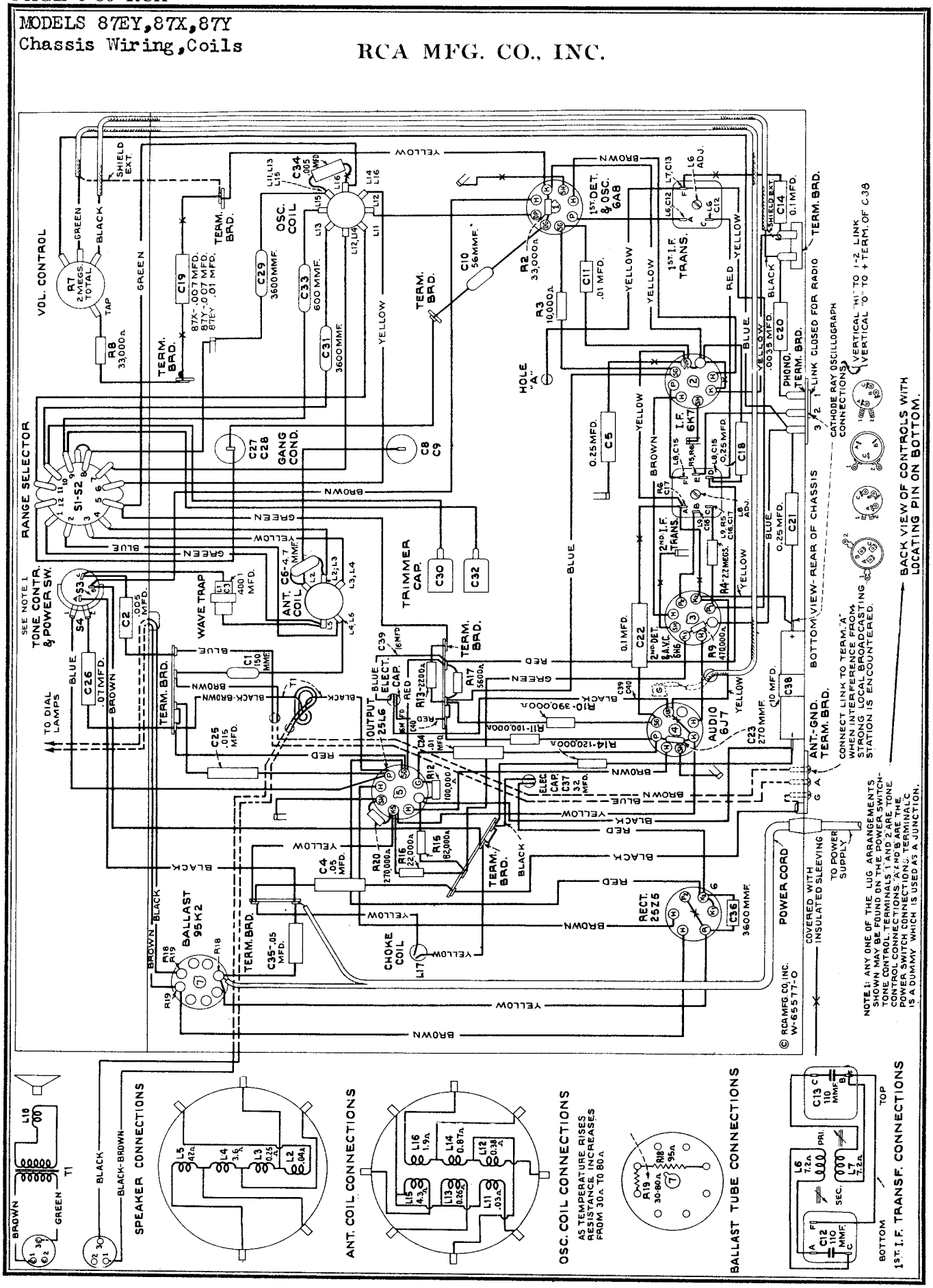

©John F. Rider, Publisher

RCA MFG. CO., INC.

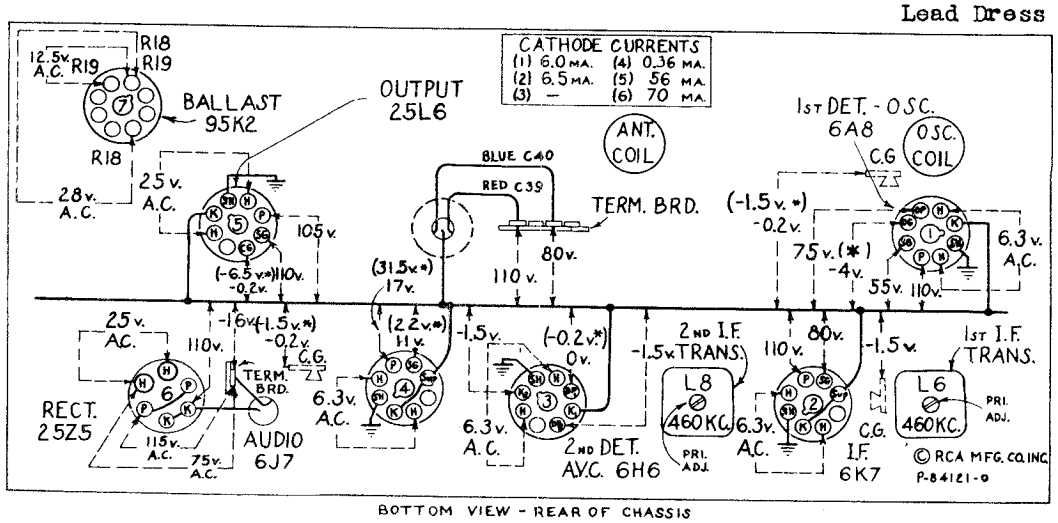

BOTTOM VIEW - REAR OF CHASSIS

Precautionary Lead Dress.—(1) Dress power cord away from audio circuits. (2) Keep filament leads away from C24. (3) Keep bus lead from term. 8 of S1-S2 to ground lance as short as possible. (4) Bus lead from term. 12 of S1-S2 to C27-C28 thence to C10 should be 4⅞ inches long. (5) Bus lead from term. 4 of S1-S2 to L2-L3 should be 2½ inches long. (6) Bus lead from L2 to C8-C9 should be 3⅞ inches long and dressed over bus lead from antenna coil to range switch. (7) Bus lead from term. 7 of S1-S2 to L12-L14 should be 2¼ inches long. (8) Keep bus lead from term. E of 2nd i-f trans. to term. 2 on phono. board as short as possible. (9) Keep leads of C10, C29, and C34 as short as possible. When replacing bus leads, use only wire having same diameter as original.

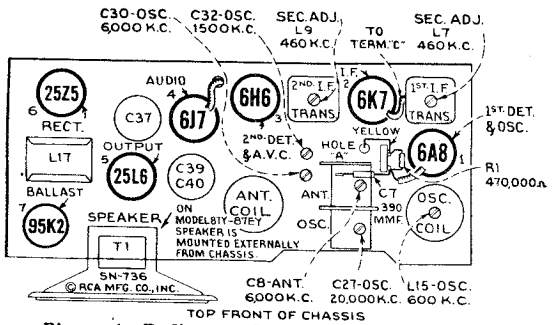

TOP FRONT OF CHASSIS

Figure 1—Radiotron, Coil, and Trimmer Locations

Alignment Procedure

Calibrate the tuning dial by adjusting main dial pointer to the low-frequency (end) calibration mark on dial with the gang tuning-condenser plates in full-mesh position; then adjust the small (vernier) pointer to "O." These are friction adjustments.

Perform alignment in proper order, tabulated below, starting with No. 1 and following all operations across, then No. 2, etc. Adjustment locations are shown on figures 1 and 2.

Cathode-ray alignment is highly preferable; the connections to the receiver circuits are shown on figure 4. If an output indicator is used, connect it across the loudspeaker voice-coil and advance the receiver volume control to full-volume position.

Connect the "low" output terminal of the test oscillator to the positive (+) side of C38 (same point as "low" vertical input to cathode-ray oscillograph) for all alignment operations. Regulate the output of the test oscillator so that minimum signal is applied to the receiver to obtain an observable output indication. This will avoid a-v-c action.

The term "Dummy antenna" means the device which must be connected between the "high" test-oscillator output and the point of connection to the receiver in order to obtain ideal alignment. "No signal, 550-750 kc" means that the receiver should be tuned to a point between 550 and 750 kc where no signal or interference is received from a station or local (heterodyne) oscillator.

For further details on alignment, refer to booklet "RCA Victor Receiver Alignment."

Order of Alignment	Test Oscillator			Range Selector	Receiver Dial Setting	Circuit to Adjust	Adjustment Symbols	Adjust to Obtain
	Connection to Receiver	Dummy Antenna	Frequency Setting					
1	6K7 I-F Grid Cap	.001 Mfd.	460 kc	"A" Left	No Signal 550-750 kc	2nd I-F Trans.	L8 and L9	Max. (peak)
2	6A8 Det. Grid Cap	.001 Mfd.	460 kc	"A"	No Signal 550-750 kc	1st I-F Trans.	L6 and L7	Max. (peak)
3	Ant. Term.	300 Ohms	20,000 kc	"C" Right	20,000 kc	"C" Osc.	C27	Max. (peak)*‡
4	Ant. Term.	300 Ohms	6,000 kc	"B" Center	6,000 kc	"B" Osc.	C30	Max. (peak)*
5	Ant. Term.	300 Ohms	6,000 kc	"B"	6,000 kc	"B" Ant.	C8	Max. (peak)
6	Ant. Term.	200 Mmfd.	600 kc	"A" Left	600 kc	"A" L-F Osc.	L15	Max. (peak)
7	Ant. Term.	200 Mmfd.	1,500 kc	"A"	1,500 kc	"A" H-F Osc.	C32	Max. (peak)
8	Ant. Term.	200 Mmfd.	600 kc	"A"	600 kc	"A" L-F Osc.	L15	Max. (peak)
9	Ant. Term.	200 Mmfd.	1,500 kc	"A"	1,500 kc	"A" H-F Osc.	C32	Max. (peak)

*Use minimum capacity peak if two peaks can be obtained.
‡After this adjustment, check for image signal by shifting receiver dial to 19.080 kc.

Measured at 115 volts, 60-cycle supply—For 115-volt d-c supply approximately 10% lower, except heater voltage which remains the same—Tuned to approximately 1,000 kc ("Standard Broadcast")—No signal being received—Volume control minimum.

©John F. Rider, Publisher

MODELS 87EY,87X,87Y
Specs.,Phono.,Parts

RCA MFG. CO., INC.

Electrical Specifications

FREQUENCY RANGES

"Broadcast" (A)	530-1,720 kc
"Medium Wave" (B)	2,100-6,800 kc
"Short Wave" (C)	6,800-22,000 kc
Intermediate Frequency	460 kc

R-F ALIGNMENT FREQUENCIES

"Short Wave" (C)	20,000 kc (osc.)
"Medium Wave" (B)	6,000 kc (osc., ant.)
"Broadcast" (A)	600 kc (osc.), 1,500 kc (osc.)

RADIOTRON COMPLEMENT

(1) RCA-6A8	First Detector—Oscillator
(2) RCA-6K7	Intermediate Amplifier
(3) RCA-6H6	Second Detector and A.V.C.
(4) RCA-6J7	Audio Voltage Amplifier
(5) RCA-25L6	Audio Power Output
(6) RCA-25Z5	Half-Wave Rectifier
(7) RCA-95K2	Ballast

Pilot Lamps (2) ..... Mazda No. 40, 6.3 volts, 0.15 amp.

POWER SUPPLY RATINGS

A-C Rating	105-125 volts, 25-100 cycles, 55 watts
D-C Rating	105-125 volts, 50 watts

POWER OUTPUT (125-volt, a-c supply)

	87EY, 87Y	87X
Undistorted	1.9 watts	1.7 watts
Maximum	3.0 watts	2.8 watts

POWER OUTPUT (125-volt, d-c supply)

	87EY, 87Y	87X
Undistorted	1.3 watts	1.2 watts
Maximum	2.1 watts	1.9 watts

Loudspeaker (Permanent-Magnet Dynamic) ..... Impedance (v.c.) 2.2 ohms at 400 cycles

Phonograph Attachment.—A terminal board is provided for connecting a phonograph into the audio amplifying circuit. RCA Victor Models R-93, R-93-A, R-93-S, R-93-2, or R-94 Record Players should be connected as follows: Remove link between terminals 1 and 2 on terminal board. Connect green wire in Radio-Record switch cable to terminal 1, yellow to terminal 2, and shield extension to terminal 3. Tape unused red and blue leads separately. Connect a 2-conductor twisted cable between the Record Player binding posts and the screw terminals on Radio-Record switch. When employing the R-93-S, the 0.1 mfd. capacitor contained in the R-93-S should be shorted out.

STOCK No.	DESCRIPTION
	RECEIVER ASSEMBLIES
14380	Arm—Band indicator operating arm and hub—less set screw Stock No. 14350
14388	Belt—Variable condenser drive belt
14623	Board—Antenna and ground terminal board
12717	Board—Phonograph terminal board
14338	Bushing—Variable condenser mounting bushing and screw assembly
12607	Cap—First I-F transformer shield top
12581	Cap—Second I-F transformer shield top
11350	Cap—Grid contact cap
12110	Cap—Radiotron shield cap
14383	Capacitor—Adjustable dual trimmer (C30, C32)
14392	Capacitor—4.7 Mmfd. (C6)
12723	Capacitor—56 Mmfd. (C10)
14262	Capacitor—110 Mmfd. (C12, C13)
12404	Capacitor—120 Mmfd. (C15, C16)
12725	Capacitor—150 Mmfd. (C1)
12406	Capacitor—180 Mmfd. (C17)
14625	Capacitor—270 Mmfd. (C23)
13894	Capacitor—390 Mmfd. (C7)
14391	Capacitor—600 Mmfd. (C33)
12811	Capacitor—3,600 Mmfd. (C29, C31, C36)
5005	Capacitor—.0035 Mfd. (C20)
4838	Capacitor—.005 Mfd. (C2, C34)
5148	Capacitor—.007 Mfd. (C19) (Models 87X and 87Y only)
13138	Capacitor—.01 Mfd. (C11)
14393	Capacitor—.01 Mfd. (C19, C24) (C19, .01 Mfd. used in Model 87EY only)
11315	Capacitor—.015 Mfd. (C25)
4886	Capacitor—.05 Mfd. (C4, C35)
14626	Capacitor—.07 Mfd. (C26)
4839	Capacitor—0.1 Mfd. (C14, C22)
12484	Capacitor—0.25 Mfd. (C5, C18, C21)
14624	Capacitor—10 Mfd. (C38)
14621	Capacitor—32 Mfd. (C37)
14622	Capacitor Pack—2 sections each 16 Mfd. (C39, C40)
14372	Coil—Antenna coil and shield (L2, L3, L4, L5)
14373	Coil—Oscillator coil and shield (L11, L12, L13, L14, L15, L16)
14363	Condenser—2 gang variable tuning condenser (C8, C9, C27, C28)
5119	Connector—3-contact female connector for reproducer cable
12800	Core—Adjustable core and stud assembly for coil Stock No. 14373
12006	Core—Adjustable core and stud for Stock No. 14376 and Stock No. 14283
14381	Dial—Station selector dial scale
14389	Dial—Band indicator dial and mounting bracket assembly (Models 87X and 87Y only)
30127	Dial—Band indicator dial and mounting bracket assembly (Model 87EY only)
14364	Drive—Variable condenser vernier pinion gear and shaft
14345	Drum—Variable condenser drive belt drum complete with set screws
11982	Fastener—Station selector dial scale fastener
30085	Gear—Indicator drive gear and hub assembly and indicator pointer stem and gear assembly complete
14341	Idler—Station selector drive belt idler
14344	Indicator—Station selector indicator pointer
14382	Indicator—Vernier indicator pointer
4340	Lamp—Dial lamp
14340	Pulley—Station selector drive belt pulley and knob shaft
14620	Reactor—Filter reactor (L17)
14361	Reflector—Dial reflector and lamp bracket assembly
14343	Retainer—Drive shaft and pulley retainer—holds tuning knob shaft and pulley on range switch shaft
13716	Resistor—2,200 Ohms—Insulated, ½ watt (R13)
11647	Resistor—5,600 Ohms—Carbon type, ½ watt (R17)
13736	Resistor—10,000 Ohms—Carbon type, ½ watt (R3)
14284	Resistor—22,000 Ohms—Carbon type, 1/10 watt (R5)
11305	Resistor—22,000 Ohms—Carbon type, ½ watt (R16)
12454	Resistor—33,000 Ohms—Insulated, ½ watt (R2)
11300	Resistor—33,000 Ohms—Carbon type, 1/10 watt (R8)
14023	Resistor—82,000 Ohms—Insulated, ½ watt (R15)
11281	Resistor—100,000 Ohms—Carbon type, 1/10 watt (R12)
14560	Resistor—100,000 Ohms—Insulated, ½ watt (R11)
13734	Resistor—120,000 Ohms—Carbon type, ½ watt (R14)
11398	Resistor—220,000 Ohms—Carbon type, 1/10 watt (R6)
11323	Resistor—270,000 Ohms—Carbon type, ½ watt (R20)
13479	Resistor—390,000 Ohms—Carbon type, ½ watt (R10)
11452	Resistor—470,000 Ohms—Carbon type, 1/10 watt (R1)
12285	Resistor—470,000 Ohms—Insulated, ½ watt (R9)
12679	Resistor—2.2 Megohm—Insulated, ½ watt (R4)
30284	Resistor—Ballast resistor tube type No. 95K2 (R18, R19)
14350	Screw—No. 8-32x3/16 square head set screw for gear Stock No. 30085 and drum Stock No. 14345 and arm Stock No. 14380
14374	Shield—Antenna coil shield
12008	Shield—First or Second I.F. transformer shield
14375	Shield—Oscillator coil shield
14171	Socket—Dial lamp socket
4786	Socket—6-contact 25Z5 Radiotron socket
11196	Socket—8-contact 6A8, 6K7, 6J7, 6H6, or 25L6 Radiotron socket
12007	Spring—Retaining spring for core Stock No. 12006 and Stock No. 12800
12907	Spring—Tension spring for indicator drive gear Stock No. 30085
14342	Spring—Tension spring for idler Stock No. 14341
14370	Switch—Range switch (S1, S2)
14371	Switch—Tone control switch and power switch (S3, S4)
14376	Transformer—First I.F. transformer (L6, L7, C12, C13)
14283	Transformer—Second I.F. transformer (L8, L9, C15, C16, C17, R5, R6)
13838	Trap—Wave trap complete (L1, C3)
14335	Volume Control (R7)
14379	Washer—Felt washer for indicator pointer
	REPRODUCER ASSEMBLIES MODEL 87X (76493-3)
14685	Cone—Reproducer cone (L10)
5118	Plug—3-contact male plug for reproducer
14684	Reproducer—Complete
14686	Transformer—Output transformer (T1)
	REPRODUCER ASSEMBLIES (RL-71-3) MODEL 87Y and 87EY
12667	Cone—Reproducer cone and dust cap
5118	Plug—3-contact male plug for reproducer
14627	Reproducer—Complete
14628	Transformer—Output transformer (T1)
	MISCELLANEOUS ASSEMBLIES
14396	Escutcheon—Station selector escutcheon and crystal
14359	Knob—Station selector knob
14269	Knob—Volume control, tone control or range switch knob
4560	Screw—Chassis mounting screw and washer assembly (Model 87EY only)
11210	Screw—Chassis mounting screw and washer assembly (Model 87Y only)
11377	Screw—Chassis mounting screw and washer assembly (Model 87X only)
4982	Spring—Retaining spring for knob Stock No. 14359
14270	Spring—Retaining spring for knob Stock No. 14269

©John F. Rider, Publisher

RCA MFG. CO., INC.

MODEL 87K1
Schematic

Pilot Lamps (3)..... Mazda No. 46, 6.3 volts, 0.25 ampere

POWER SUPPLY RATINGS

Rating A..... 105-125 volts, 50-60 cycles, 80 watts
Rating B..... 105-125 volts, 25-60 cycles, 80 watts
Rating C..... 105-125/200-250 volts, 50-60 cycles, 80 watts

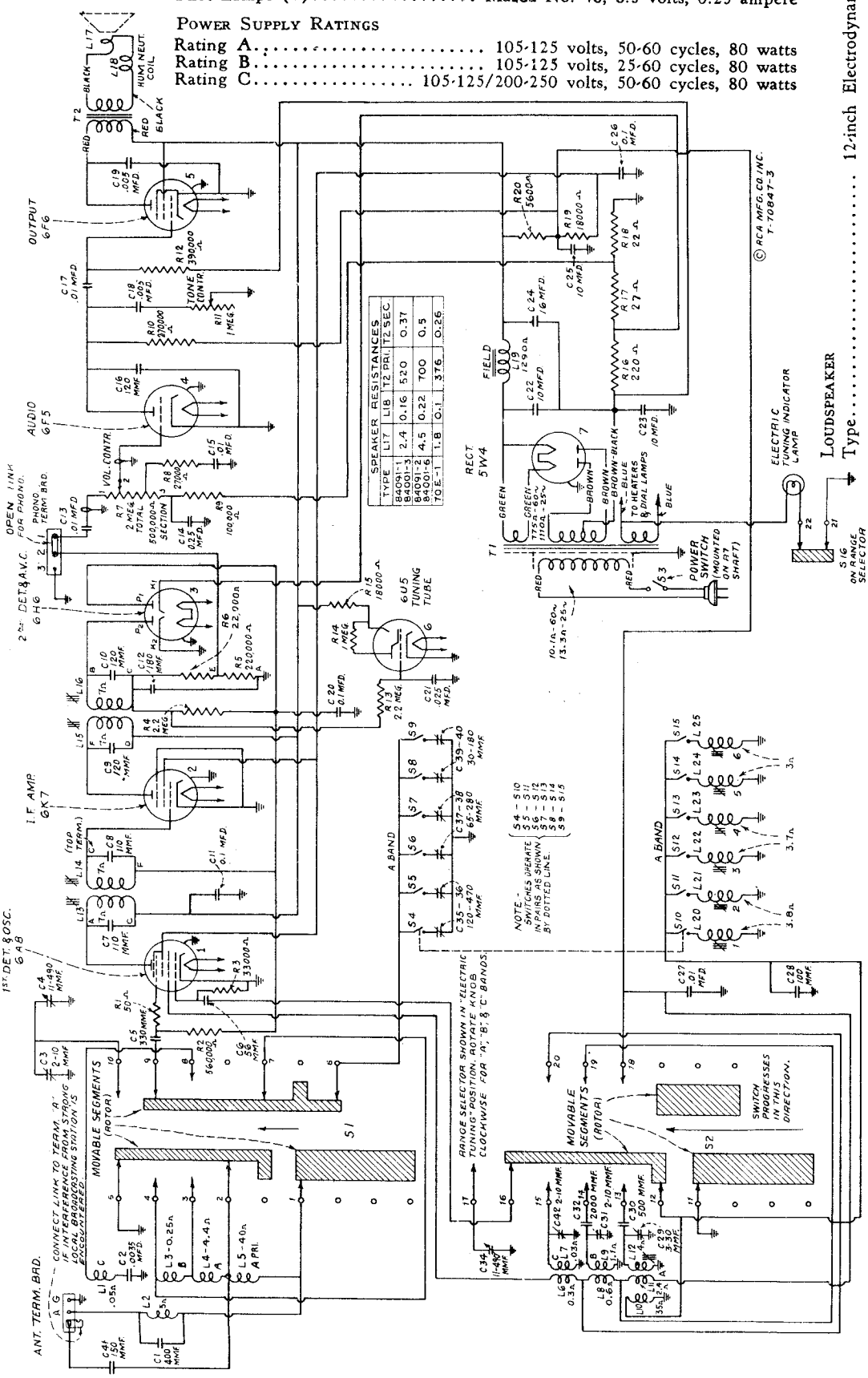

Figure 3—Schematic Circuit Diagram

Stock No. 13477 Resistor, 27,000 ohms replaces R19 on later production.

LOUDSPEAKER
Type..... 12-inch Electrodynamic
Impedance (v.c.) at 400 cycles..... 2.2 ohms

R-F ALIGNMENT FREQUENCIES
"Medium Wave" (B)..... 6,000 kc (osc., ant.)
"Short Wave" (C)..... 20,000 kc (osc.)
"Standard Broadcast" (A)... 600 kc (osc.), 1,500 kc (osc.)

FREQUENCY RANGES
"Standard Broadcast" (A)..... 540-1,720 kc
"Medium Wave" (B)..... 2,300-7,500 kc
"Short Wave" (C)..... 7,500-22,000 kc

Intermediate Frequency..... 460 kc

©John F. Rider, Publisher

MODEL 87K1
Chassis Wiring
Lead Dress, Phono.

RCA MFG. CO., INC.

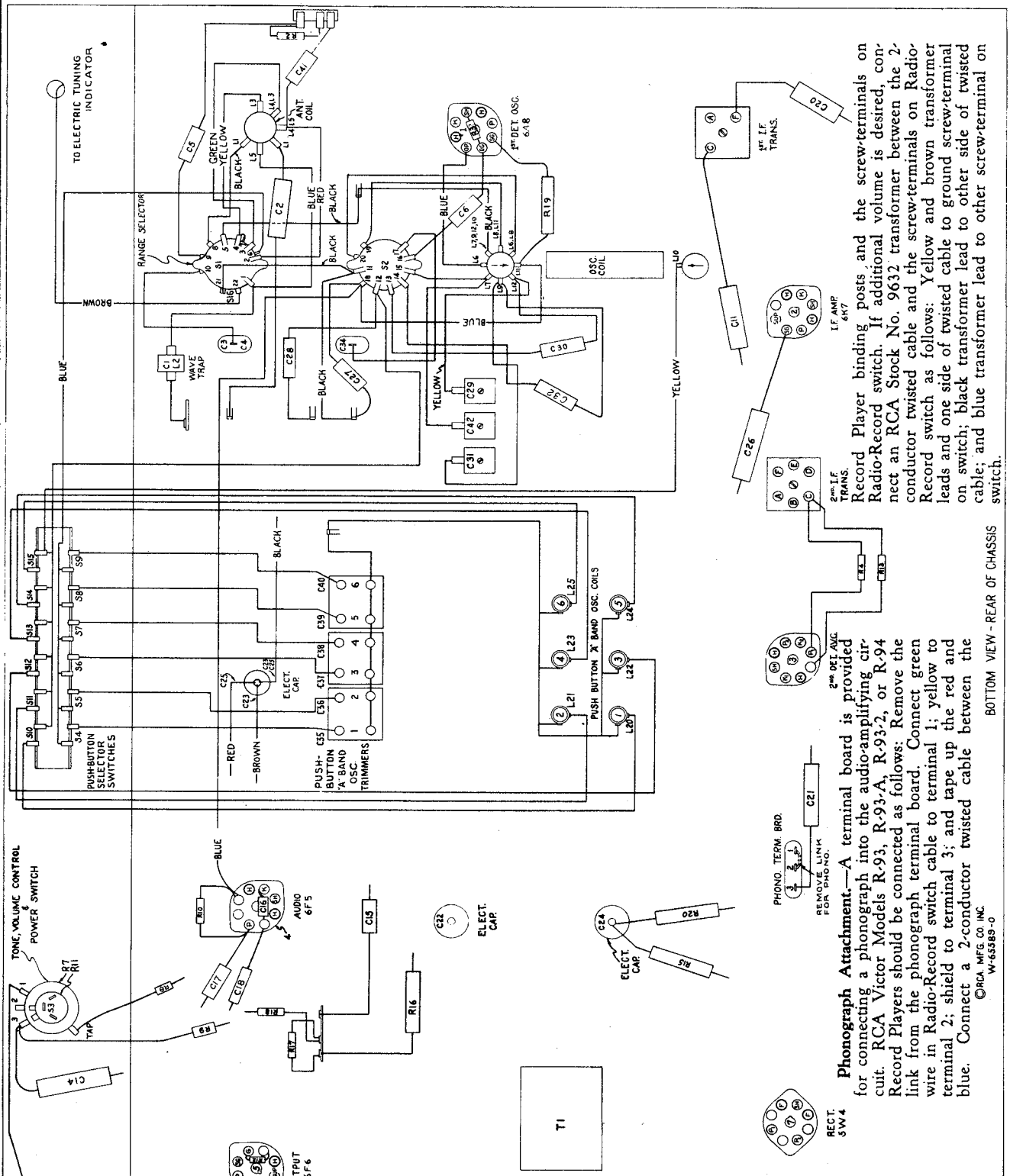

Phonograph Attachment.—A terminal board is provided for connecting a phonograph into the audio-amplifying circuit. RCA Victor Models R-93, R-93-A, R-93-2, or R-94 Record Players should be connected as follows: Remove the link from the phonograph terminal board. Connect green wire in Radio-Record switch cable to terminal 1; yellow to terminal 2; shield to terminal 3; and tape up the red and blue. Connect a 2-conductor twisted cable between the Record Player binding posts and the screw-terminals on Radio-Record switch. If additional volume is desired, connect an RCA Stock No. 9632 transformer between the 2-conductor twisted cable and the screw-terminals on Radio-Record switch as follows: Yellow and brown transformer leads and one side of twisted cable to ground screw-terminal on switch; black transformer lead to other side of twisted cable; and blue transformer lead to other screw-terminal on switch.

©RCA MFG. CO. INC.
W-65389-0

Precautionary Lead Dress.—Maintain original length and size of the following: (1) all leads from range selector to antenna and oscillator coils; (2) lead from oscillator coil to ground; (3) leads from gang condenser to range selector. (4) Keep filament leads twisted and dressed away from 6F5 grid lead. (5) Keep leads from C2 as short as possible.

©John F. Rider, Publisher

RCA MFG. CO., INC.

MODEL 87K1
Socket, Trimmers
Voltage, Tuner

Electric Tuning Alignment.—Select six "A" band stations to be tuned with push-buttons. It is usually preferable to choose stations not on the same network. For push-buttons 1 and 2, choose stations from 540 kc to 1,160 kc; for 3 and 4, stations from 600 kc to 1,260 kc; and for 5 and 6, stations from 770 kc to 1,550 kc. The push-buttons are numbered consecutively from left to right.

Allow the receiver to operate about five minutes before proceeding with "Electric Tuning" alignment.

To align so that push-button 1 will tune WJZ, e.g., first set "Range Selector" to "Standard Broadcast" position and manually tune WJZ at a dial setting near 760 kc. Then set "Range Selector" for "Electric Tuning," press push-button 1, and again tune WJZ for maximum output by carefully adjusting first L20 and then C35. If there is difficulty in recognizing the desired station it should be borne in mind that clockwise rotation of trimmer and magnetite-core screws lowers the frequency to which the radio is tuned. Preliminary setting of the adjustments may be made with the use of a test oscillator. In any case final adjustment should be made on the desired station. Use "Magic Eye" indication of maximum output; tune for minimum width of dark sector of the eye. Proceed similarly, following the above table for the remaining push-buttons.

The first-detector trimmer adjustment will appear to be broad when tuning strong local signals because of a.v.c. action, so to obtain accurate adjustment on strong signals it will be necessary during adjustment to use an antenna only a few inches long. Use enough antenna to not more than half close the "Magic Eye."

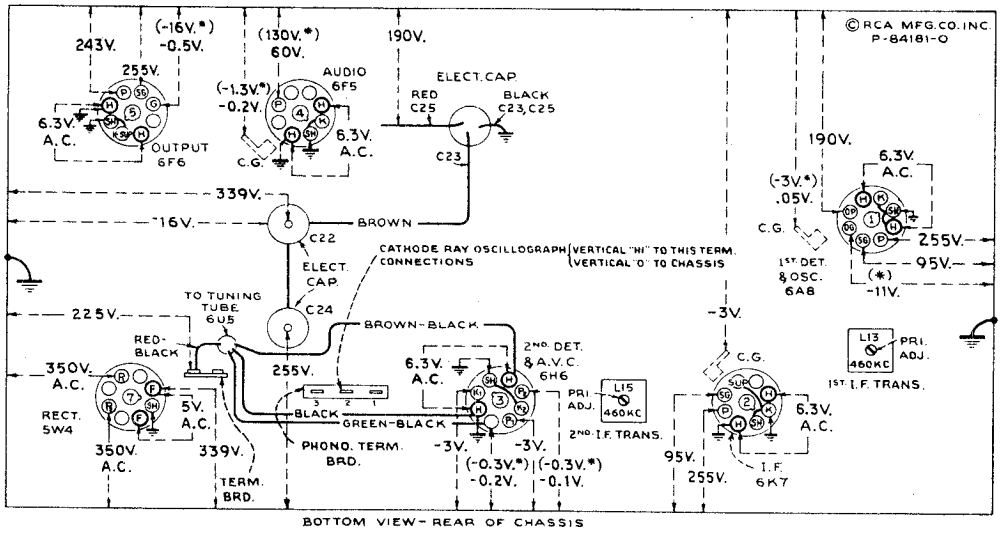

Figure 1—Radiotron Socket Voltages and Trimmer Locations

Measured at 115 volts, 60-cycle supply—Tuned to approximately 1,000 kc ("Standard Broadcast")—No signal being received—Volume control minimum—Tone control optional

***Note:** Two voltage values are shown for some readings. The value shown in parentheses with asterisk (*) indicates operating conditions without voltmeter loading. The other value (generally lower) is the actual measured voltage and differs from the value shown in parentheses because of the additional loading of the voltmeter through the high series circuit resistance.*

Voltage values as specified should hold within ±20% when the receiver is normally operative at its rated line voltage. To duplicate the conditions under which the voltages were measured requires a 1,000-ohm-per-volt d-c meter, having ranges of 10, 50, 250 and 500 volts. Use the nearest range above the specified measured voltage. A-c voltages were measured with a corresponding a-c meter.

Radiotron Cathode Current Readings

Measured with Milliammeter Connected at Tube Socket Cathode Terminals Under Conditions Similar to Those of Voltage Measurements

(1)	RCA-6A8—1st Det.—Osc.	12	ma.
(2)	RCA-6K7—I-F Amp.	8	ma.
(3)	RCA-6H6—2nd Det.—A.V.C.	—	ma.
(4)	RCA-6F5—A-F Amp.	0.2	ma.
(5)	RCA-6F6—Output	41	ma.
(6)	RCA-5W4—Rectifier	63	ma.*
(7)	RCA-6U5—Tuning Tube	1.6	ma.

(*Cannot be measured at socket)

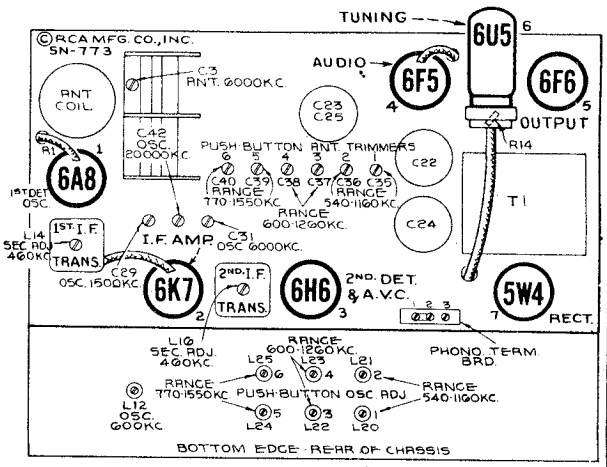

Figure 2—Radiotron, Component Part, and Trimmer Locations

©John F. Rider, Publisher

MODEL 87K1
Alignment
Parts

RCA MFG. CO., INC.

Alignment Procedure

Calibrate the tuning dial by adjusting dial pointer to the low-frequency (end) calibration mark on dial with the gang tuning condenser plates in full-mesh position. The pointer is soldered in place on the drive cable.

Perform alignment in proper order, tabulated below, starting with No. 1 and following all operations across, then No. 2, etc. Adjustment locations are shown on figures 1 and 2.

Cathode-ray alignment is highly preferable; the connections to the chassis are shown on figure 1. If an output indicator is used, connect it across the loudspeaker voice-coil and advance the receiver volume control to full-volume position.

Connect the "low" output terminal of the test oscillator to the receiver "G" (ground) terminal for all alignment operations. Regulate the output of the test oscillator so that minimum signal is applied to the receiver to obtain an observable output indication. This will avoid a-v-c action.

The term "Dummy antenna" means the device which must be connected between the "high" test-oscillator output and the point of connection to the receiver in order to obtain ideal alignment. "No signal, 550-750 kc" means that the receiver should be tuned to a point between 550 and 750 kc where no signal or interference is received from a station or local (heterodyne) oscillator. "Min. Eye" means minimum width of dark sector of "Magic Eye" or greatest deflection.

For further details on alignment, refer to booklet "RCA Victor Receiver Alignment."

Order of Alignment	Test Oscillator: Connection to Receiver	Test Oscillator: Dummy Antenna	Test Oscillator: Frequency Setting	Range Selector	Receiver Dial Setting	Circuit to Adjust	Adjustment Symbols	Adjust to Obtain
1	6K7 I-F Grid Cap	.001 Mfd.	460 kc	"Standard Broadcast"	No Signal 550-750 kc	2nd I-F Trans.	L15 and L16	Max. (peak)
2	6A8 Det. Grid Cap	.001 Mfd.	460 kc	"Standard Broadcast"	No Signal 550-750 kc	1st I-F Trans.	L13 and L14	Max. (peak)
3	Ant. Term. A	300 Ohms	6,000 kc	"Medium Wave"	6 mc	"B" Osc.	C31	Max. (peak)
4	Ant. Term. A	300 Ohms	6,000 kc	"Medium Wave"	6 mc	"B" Ant.	C3	Max. (peak)
5	Ant. Term. A	300 Ohms	20,000 kc	"Short Wave"	20 mc	"C" Osc.	C42	Max. (peak)*
6	Ant. Term. A	200 Mmfd.	600 kc	"Standard Broadcast"	600 kc	"A" L-F Osc.	L12	Max. (peak)
7	Ant. Term. A	200 Mmfd.	1,500 kc	"Standard Broadcast"	1,500 kc	"A" H-F Osc.	C29	Max. (peak)
8	Ant. Term. A	200 Mmfd.	600 kc	"Standard Broadcast"	600 kc	"A" L-F Osc.	L10	Max. (peak)
9	Ant. Term. A	200 Mmfd.	1,500 kc	"Standard Broadcast"	1,500 kc	"A" H-F Osc.	C29	Max. (peak)
10	Connect an antenna to receiver Ant. Term. A. See Electric Tuning Alignment described below.		540-1,160 kc	"Electric Tuning"	540-1,160 kc	"A" Osc. 1 & Ant. 1	L20 and C35	Min. Eye
11			540-1,160 kc	"Electric Tuning"	540-1,160 kc	"A" Osc. 2 & Ant. 2	L21 and C36	Min. Eye
12			600-1,260 kc	"Electric Tuning"	600-1,260 kc	"A" Osc. 3 & Ant. 3	L22 and C37	Min Eye
13			600-1,260 kc	"Electric Tuning"	600-1,260 kc	"A" Osc. 4 & Ant. 4	L23 and C38	Min. Eye
14			770-1,550 kc	"Electric Tuning"	770-1,550 kc	"A" Osc. 5 & Ant. 5	L24 and C39	Min. Eye
15			770-1,550 kc	"Electric Tuning"	770-1,550 kc	"A" Osc. 6 & Ant. 6	L25 and C40	Min. Eye

* Use maximum capacity peak if two peaks can be obtained. Check for image signal by shifting receiver dial to 20.92 mc.

Service Data

Loudspeaker.—Centering of the loudspeaker is made in the usual manner with three narrow paper feelers after first removing the front dust cover. This may be removed by softening its cement with a light application of acetone, using care not to allow the acetone to flow into the air gap. The dust cover should be cemented back in place with ambroid upon completion of adjustment.

Electric tuning is accomplished in a simple, trouble-free manner without the use of rotating parts. There are six trimmers for tuning the single antenna coil and six magnetite-core adjusted oscillator coils. A desired station is tuned accurately, quickly, and silently by pressing a push-button which puts the pre-adjusted coil and trimmer into use. Oscillator frequency drift is reduced to a negligible amount by use of a temperature-compensating capacitor across the oscillator coils.

REPLACEMENT PARTS

Insist on genuine factory-tested parts, which are readily identified and may be purchased from authorized dealers.

STOCK No.	DESCRIPTION
	RECEIVER ASSEMBLY
30755	Arm—Band indicator operating arm—fastens on range switch shaft
14384	Belt—Drive belt
14623	Board—Antenna and ground terminal board
12717	Board—Phonograph terminal board
30752	Bracket—Tuning tube mounting bracket and clip
30754	Cable—Band indicator operating cable
11350	Cap—Grid contact cap
30766	Cap—Rubber cap for tuning tube
30751	Capacitor—Trimmer—Comprising two sections each 2-10 Mmfd. and one section 3-30 Mmfd. (C29, C31, C42)
30750	Capacitor—Dual trimmer, 30-180 Mmfd. each section (C39, C40)
12723	Capacitor—56 Mmfd. (C6)
30764	Capacitor—Dual trimmer, 65-280 Mmfd. each section (C37, C38)
30769	Capacitor—100 Mmfd. (C28)
14262	Capacitor—110 Mmfd. (C7, C8)
12404	Capacitor—120 Mmfd. (C9, C10)
12724	Capacitor—120 Mmfd. (C16)
30765	Capacitor—Dual trimmer, 120-470 Mmfd. each section (C35, C36)
12725	Capacitor—150 Mmfd. (C41)
12406	Capacitor—180 Mmfd. (C12)
12952	Capacitor—330 Mmfd. (C5)
30768	Capacitor—500 Mmfd. (C30)
30767	Capacitor—2,000 Mmfd. (C32)
30303	Capacitor—.0035 Mfd. (C2)
4838	Capacitor—.005 Mfd. (C18, C19)
14393	Capacitor—.01 Mfd. (C13, C15, C17, C27)
4870	Capacitor—.025 Mfd. (C21)
4839	Capacitor—0.1 Mfd. (C11, C20, C26)
12484	Capacitor—0.25 Mfd. (C14)
11203	Capacitor—10 Mfd. (C25)
30577	Capacitor—Comprising two sections each 10 Mfd. (C22, C23)
5212	Capacitor—16 Mfd. (C24)
30745	Coil—Antenna coil and shield A, B, and C bands (L1, L3, L4, L5)
30747	Coil—Oscillator coil A band (L20 or L21)
30748	Coil—Oscillator coil A band (L22 or L23)
30749	Coil—Oscillator coil A band (L24 or L25)
30746	Coil—Oscillator coil A, B, C bands (L6, L7, L8, L9, L10, L11, L12)
30740	Condenser—2-gang variable tuning condenser (C3, C4, C34)
30743	Control—Volume control, tone control, and power switch in one unit (R7, R11, S3)
30763	Cord—Indicator drive cord
30759	Dial—Station selector dial scale
30753	Disc—Band indicator disc with colored segment
30741	Drive—Variable condenser vernier drive shaft and pinion gear
30587	Drum—Drive belt drum—fastens on variable condenser vernier drive shaft
30761	Drum—Indicator cord drum—fastens on variable condenser rotor shaft
14341	Idler—Drive idler pulley, bracket and spring
30762	Indicator—Indicator pointer and slider
5226	Lamp—Dial lamp
30757	Pulley—Large size pulley for indicator cord—located at top left corner of dial bracket
30758	Pulley—Medium size pulley for indicator cord—located at top right side of dial bracket
14697	Pulley—Small size pulley for indicator cord—located at top right hand corner of dial bracket
14525	Resistor—22 ohms, carbon type, ¼ watt (R18)
11955	Resistor—27 ohms, carbon type, ¼ watt (R17)
30771	Resistor—50 ohms, flexible type, 2¼ watts (R1)
16293	Resistor—220 ohms, carbon type, 1 watt (R16)
11298	Resistor—5,600 ohms, carbon type, 1 watt (R20)
30151	Resistor—18,000 ohms, insulated, 1 watt (R15, R19)
14284	Resistor—22,000 ohms, carbon type, 1/10 watt (R6)
11400	Resistor—27,000 ohms, carbon type, ¼ watt (R8)
12454	Resistor—33,000 ohms, insulated, ¼ watt (R3)
14560	Resistor—100,000 ohms, insulated, ¼ watt (R9)
11398	Resistor—220,000 ohms, carbon type, 1/10 watt (R5)
12199	Resistor—270,000 ohms, insulated, ¼ watt (R10)
13005	Resistor—390,000 ohms, carbon type, 1/10 watt (R12)
11397	Resistor—560,000 ohms, carbon type, 1/10 watt (R2)
12013	Resistor—1 Megohm, carbon type, 1/10 watt (R14)
12679	Resistor—2.2 Megohm, insulated, ¼ watt (R4, R13)
30760	Shaft—Tuning knob shaft and pulley
5119	Socket—3-contact socket for speaker cable
13871	Socket—6-contact tuning tube socket
11196	Socket—8-contact Radiotron socket
14114	Socket—Dial lamp socket—open type
14171	Socket—Dial lamp socket—shell type
30756	Spring—Band indicator tension spring
14342	Spring—Idler pulley tension spring
30585	Spring—Indicator cord tension spring
30742	Switch—Range switch (S1, S2, S16)
30744	Switch—Tuning push button switch (S4, S5, S6, S7, S8, S9, S10, S11, S12, S13, S14, S15)
14376	Transformer—First I.F. transformer (L13, L14, C7, C8)
14283	Transformer—Second I.F. transformer (L15, L16, C9, C10, C12, R5, R6)
30607	Transformer—Power transformer 105-125 volts and 200-240 volts, 50-60 cycle (T1)
30571	Transformer—Power transformer 105-125 volts, 25-60 cycle (T1)
13838	Trap—Wave trap (L2, C1)
	REPRODUCER ASSEMBLIES
13866	Cap—Dust cap for cone center
14354	Coil—Field coil (L19)
11469	Coil—Hum neutralizing coil (L16)
12667	Cone—Reproducer cone and dust cap (L17)
5118	Plug—3-contact male plug for reproducer
14395	Reproducer—complete
14358	Screw—Screw, washer and lockwasher to hold core in yoke
14355	Transformer—Output transformer (T2)
14357	Washer—Spring washer to hold field coil
	MISCELLANEOUS ASSEMBLIES
30778	Button—Automatic station selector push button
30780	Cushion—Rubber cushion for automatic station selector button
30774	Escutcheon—Station selector escutcheon complete with side panels and buttons
30775	Escutcheon—Station selector escutcheon center section only—less side panels and buttons
30776	Escutcheon—Station selector escutcheon right and left hand sections only
30773	Knob—Volume control knob
14269	Knob—Range switch knob
14359	Knob—Station selector knob
30772	Knob—Tone control and power switch knob
11210	Screw—Chassis mounting screw and washer assembly
30779	Shield—Celluloid shield for call letter cards
30777	Shield—Finished metal shield and screws for automatic station selector button panel
30330	Spring—Retaining spring for knob Stock No. 30772
14270	Spring—Retaining spring for knobs Stock Nos. 30773 and 14269
4982	Spring—Retaining spring for knob Stock No. 14359

©John F. Rider, Publisher

RCA MFG. CO., INC.

MODEL R89
Specifications
Installation Data

Electrical and Mechanical Specifications

RCA TUBE COMPLEMENT

(1) RCA-6F5 ..... Audio Voltage Amplifier
(2) RCA-25L6 ..... Audio Power Output
(3) RCA-25Z6 ..... Rectifier

LOUDSPEAKER

Type ..... Electrodynamic
Voice Coil Impedance ..... 4.5 ohms at 400 cycles
Undistorted ..... 1.0 watts
Maximum ..... 2.0 watts

POWER SUPPLY RATING

A-5 ..... 105-125 volts, 50 cycles, 45 watts
A-6 ..... 105-125 volts, 60 cycles, 45 watts

VICTROLA MECHANISM

Motor ..... Manual Starting Synchronous
Turntable Speed ..... 78 r.p.m.
Pickup ..... Crystal
Impedance ..... 30,000 ohms at 1,000 cycles

Cabinet Dimensions	Height 5 inches	Width 12¼ inches	Depth 10 inches
Chassis Base Dimensions (with speaker)	Height 3 inches	Width 7⅞ inches	Depth 5¼ inches
Weight (Shipping)	8 pounds	Weight (Net)	6 pounds

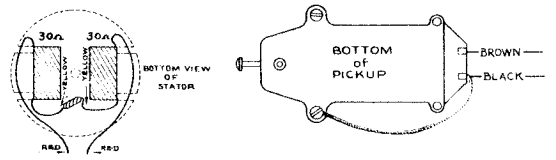

Wiring Details

R-89

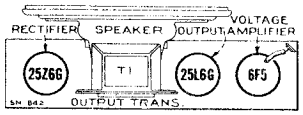

Tube Locations

CONNECTING VICTROLA TO:

1939 RCA RADIO RECEIVERS OF "90" SERIES:

Plug male jack on end of Victrola cable into female receptacle on receiver chassis. Push or turn "Phono" switch to "Phono" position, and operate Victrola according to instructions.

RADIO RECEIVERS HAVING "PHONO" TERMINAL BOARDS.

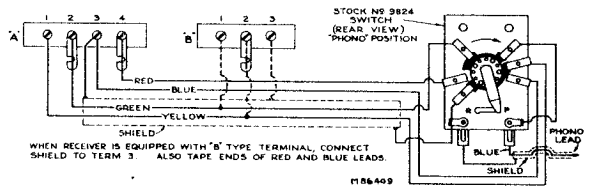

RCA Radio Receivers to which the above illustration applies: 5T1, 5T4, 5T5, 5T6, 5T7, 5T8, 6T5, 8T2, 8T11, 8K11, 85T5, 86E, 86K, 86T, 86T1, 86T4, 86K7, 86T44, 87K, 87T, 87K1, 87K2, 87T2, 88K, 810K, 810K1, 810T, 810T4, 811K, 812K, 813K, 816K, 811T.

For following Receivers, Yellow lead should go on Terminal No. 1, Green lead on Terminal No. 2: 6K2, 6T2, 6K3, 6K10, 6T10, 7T1, 7K1, 85T8, 86T3, 86T2, 86T6, 87T1.

Insulate shield of switch wires from chassis, on following RCA Receivers: 5T, 6T, 6K, 6K1, 7T, 7K, 7X, 7X1, 8T, 8T10, 8K, 8K1, 86X4, 87EY, 87X, 87Y.

Receivers having a Four Terminal Board: 9K, 9T, 9K1, 9K2, 9K3, 9K10, 10T, 10K, 10K1, 13K, 15K. Reverse Red and Blue leads to Terminal Board of C9-6, T9-9, T8-16, C8-17.

RADIO RECEIVERS WHOSE FIRST AUDIO AMPLIFIER TUBE IS OF THE GRID CAP TYPE.

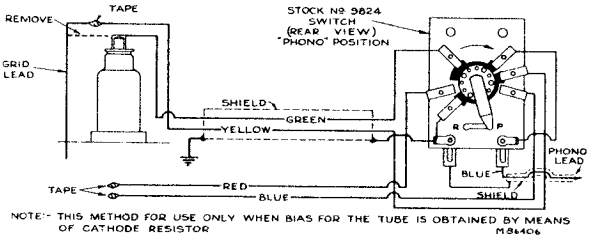

RCA Receivers for which above method applies: 125, 128, 128E, 224E, 225, 226, T6-1, C6-2, T6-9, T7-5, C7-6, T7-12, C7-14, T8-14, C8-15, T8-18, C8-19, C8-20, C9-4, T9-10.

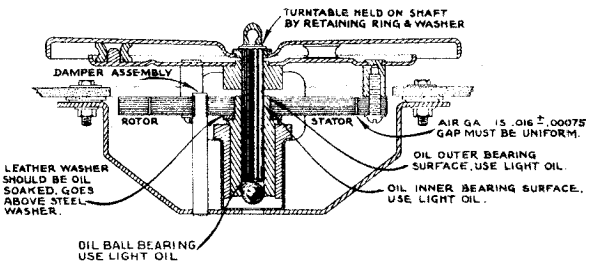

Motor Details

RADIO RECEIVERS WHOSE FIRST AUDIO TUBE IS OF THE GRID CAP TYPE, AND FIXED BIAS FOR TUBE IS OBTAINED THROUGH GRID LEAD.

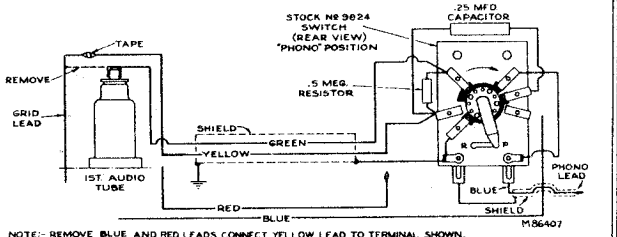

RADIO RECEIVERS USING 6C5 OR 6J5, 6C5G OR 6J5G, TUBE FOR FIRST AUDIO AMPLIFIER.

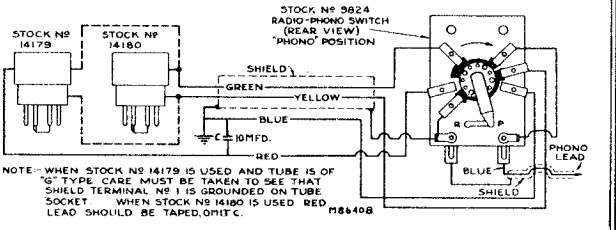

Stock No. 14179 Adaptor opens grid circuit, and inserts 2,700 ohm resistor in cathode of 6C5 or 6J5 tubes, for bias on Phono reproduction.

Stock No. 14180 Adaptor opens grid circuit of 6C5 or 6J5 tube.

Stock No. 14180 Adaptor necessary for RCA: C11-1, C13-2, T10-1, C11-3, C13-3.

Stock No. 14179 Adaptor necessary for RCA: C15-3, C15-4.

RADIO RECEIVERS WHERE RECEIVER VOLUME CONTROL IS TO BE USED TO ALSO CONTROL "PHONO" VOLUME.

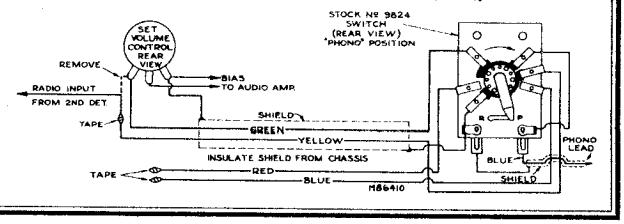

©John F. Rider, Publisher

MODEL R89
Schematic, Voltage
Chassis Wiring, Notes
Parts

RCA MFG. CO., INC.

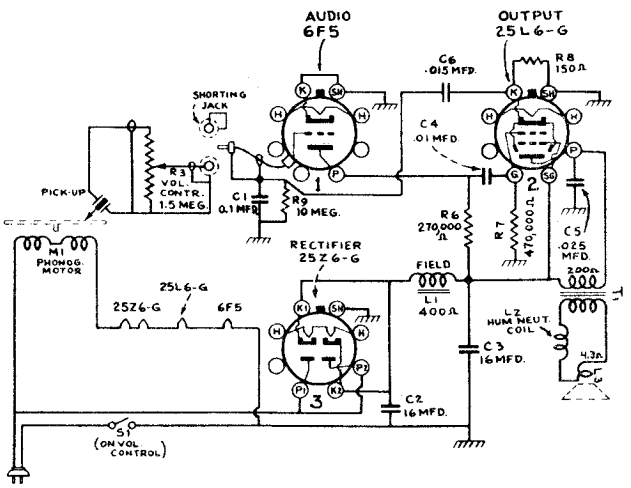

Schematic Circuit Diagram

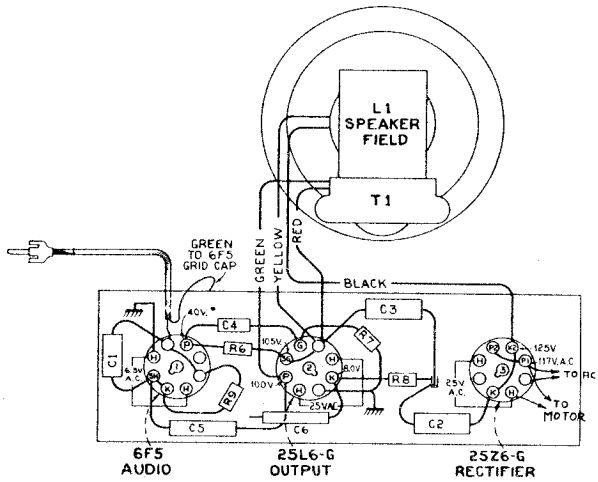

Wiring and Socket Voltages

*NOTE: Values with star (*) are operating voltages in circuits with high series-resistance, and when measured will read lower depending on the voltmeter loading.

Measurements made to chassis unless otherwise indicated. Values should hold within approximately ± 20% with 117-volt a-c supply.

General Description and Service Data

The model R-89 Electric Victrola consists of a crystal pickup, a three tube audio amplifier, a dynamic speaker, and motor turntable mechanism in a table type walnut veneer cabinet. Any record, up to and including the 12-inch size, may be played on this instrument.

The crystal pickup unit is securely sealed in a metal casing against extreme changes of climate. If failure occurs due to a defective crystal unit, no attempt should be made to repair it, but a new replacement crystal unit should be installed.

This instrument may also be used to play records through a radio receiver, if so desired. To do this remove shielded lead at rear of cabinet from pickup jack, and plug into shorting jack, and plug lead from radio receiver into pickup jack. Methods of connecting mechanism to various receivers, are shown on next page.

Phonograph Motor

The synchronous motor used in this instrument is designed to be simple and foolproof. The parts that may require attention are plainly shown. The motor is started by turning "on" the power switch and giving the turntable a clockwise spin with the hand. Smooth starting and running will be insured by keeping the bearings well cleaned and oiled.

Hum and Vibration.—A small amount of hum when starting, decreasing to a negligible amount when running, is normal. If excessive vibration occurs it may be due to:

1. Insufficient lubrication, or any failure that will cause binding.
2. Leather washer not oiled. (Check to make certain that the leather washer is above the steel washer.)
3. Motor not properly supported from motor board.
4. Burrs on poles of rotor or stator. Remove with fine emery cloth.
5. Stator should be free to rotate between limits of damping assembly.

Removing Rotor.—The rotor and turntable assembly simply rests on the ball bearing at bottom of vertical bearing. Remove by lifting upward.

Rotor Adjustment.—Remove motor from cabinet. Loosen the three screws that hold the rotor to the turntable, insert three 16-mil shims at equal distances around the gap between the rotor and stator, and then carefully tighten the three screws. The top of rotor must be flush with top of stator; add additional steel washers beneath the stator if necessary.

Do not remove Turntable while set is turned on, as damage to tubes will result.

Replacement Parts

Insist on genuine factory-tested parts, which are readily identified and may be purchased from authorized dealers.

STOCK No.	DESCRIPTION	Unit List Price
	AMPLIFIER ASSEMBLIES	
31886	Cable—Shielded amplifier input cable complete with plug	.25
14393	Capacitor—.01 mfd. (C4)	.30
11315	Capacitor—.015 mfd. (C6)	.20
4870	Capacitor—.025 mfd. (C5)	.20
30899	Capacitor—0.1 mfd. (C1)	.30
31323	Capacitor—16 mfd. (C2, C3)	.65
13428	Resistor—150 ohms, ½ watt (R8)	.20
12199	Resistor—270,000 ohms, ½ watt (R6)	.20
12285	Resistor—470,000 ohms, ½ watt (R7)	.20
13601	Resistor—10 meg. ½ watt (R9)	.20
31319	Socket—Tube socket	.25
	PICKUP AND ARM ASSEMBLIES	
31888	Base—Pickup arm base and pivot shaft	.95
31050	Crystal—Pickup crystal and needle screw	3.75
31887	Pickup arm and crystal complete	6.75
31745	Ring—Retaining ring for pickup arm base	.02
12539	Screw—Pickup needle screw	.22
	MOTOR ASSEMBLIES	
31045	Base—Motor support, damper, and bearing cup assembly	.60
31046	Bearing—Bearing assembly	.70
31041	Cap—Rubber spindle cap	.05
31047	Cushion—Rubber cushion for bearing	.15
31924	Motor—105-125 volts, 50 cycle (M1)	8.90
31923	Motor—105-125 volts, 60 cycle (M1)	8.60
31040	Mountings—Turntable rubber mountings sufficient for one turntable	.25
32023	Rotor—Turntable and rotor laminations for 50 cycle motor	5.20
31926	Rotor—Turntable and rotor laminations for 60 cycle motor	5.20
32022	Stator—Stator assembly complete with coils and laminations for 110 volts, for 50 cycle motor	2.95
31925	Stator—Station assembly complete with coils and laminations for 110 volts, for 60 cycle motor	2.60
31039	Turntable—Finished turntable top plate only—less rubber mountings	.95
14231	Washer—Bearing shim washers	.02
4083	Washer—Leather washer	.02
	SPEAKER ASSEMBLIES (84202-3)	
31202	Cone—Speaker cone and voice coil (L3)	1.30
31201	Speaker Complete	3.95
31203	Transformer—Output transformer (T1)	1.00
	MISCELLANEOUS ASSEMBLIES	
31986	Cable—Pickup-to-receiver interconnecting cable required when instrument is used as record player only	.55
3961	Knob—Volume control knob	.10
13053	Screw—Motor mounting screws, cushions and nuts, sufficient for one motor	.30
14278	Socket—Amplifier shorting socket or pickup output socket	.25
31889	Volume control and switch (R8, S1)	1.50

ALL PRICES ARE SUBJECT TO CHANGE OR WITHDRAWAL WITHOUT NOTICE.

©John F. Rider, Publisher

RCA MFG. CO., INC.

MODELS 94BK, 94BT
Schematic, Socket
Trimmers, Voltage
Alignment, Lead Dress

Alignment Procedure

Cathode-ray Alignment is the preferable method. Connections for the oscillograph are shown in the chassis drawing.

Output Meter Alignment.—If this method is used, connect the meter across the voice coil, and turn the receiver volume control to maximum.

Test-oscillator.—For all alignment operations, connect the low side of the test-oscillator to the receiver chassis, and keep the output as low as possible to avoid a-v-c action.

For additional details, refer to booklet "RCA Victor Receiver Alignment."

Pre-setting Dial.—With gang condenser in full mesh, the pointer should be horizontal.

Re-sealing I.F. Adjustment Screws.—After completion of alignment, seal the I.F. magnetite-core adjustment screws with a few drops of household cement.

Steps	Connect the high side of test-oscillator to—	Tune test-osc. to—	Turn radio dial to—	Adjust the following for max. peak output
No. 1	1D5-G I-F grid cap, in series with .001 mfd.	455 kc	Quiet point between 550-750 kc	L7 and L8 (2nd I-F transformer)
No. 2	1C7-G 1st-det. grid cap, in series with .001 mfd.	455 kc		L5 and L6 (1st I-F transformer)
No. 3	Antenna lead, in series with 200 mmfd.	1,500 kc	1,500 kc	C5* (oscillator) C2 (antenna)

* Trimmer C6 on gang condenser should be unscrewed one complete turn from tight, before adjusting C5.

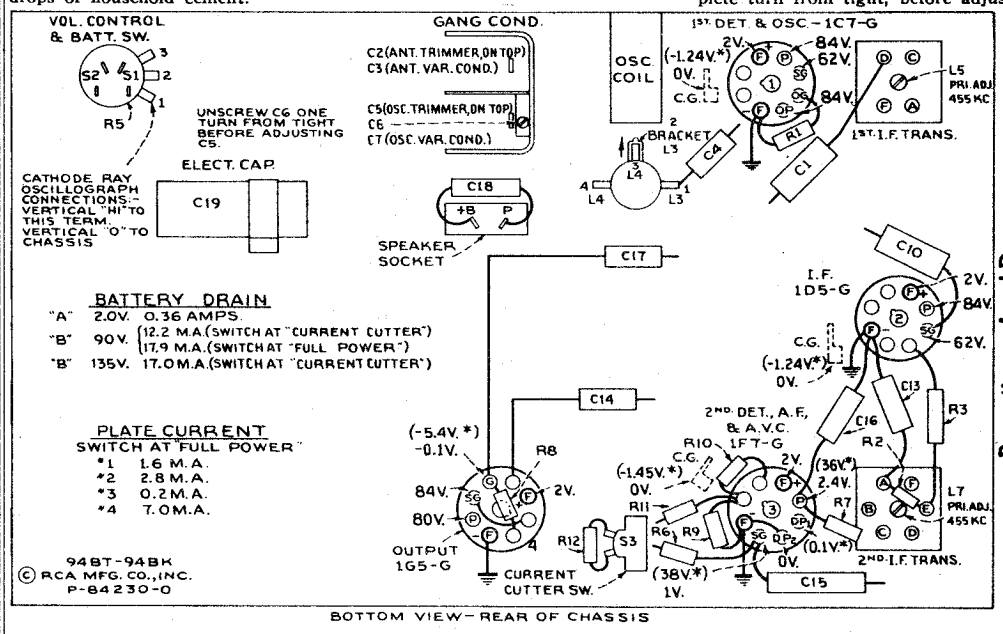

Precautionary Lead Dress

1. I.F. plate lead should be dressed close to and along edge of chassis.
2. Lead from antenna terminal should be wrapped (9 turns) around lead from ant. coil secondary to gang condenser (see schematic).
3. Antenna and ground leads should be arranged as shown in top view.

BATTERIES REQUIRED
"A", one 2½-volt air cell or one 2-volt storage battery, or one 3-volt dry "A" battery. (With latter, use No. 30935, 2.2-ohm resistor in series with positive "A" lead.)
"B", two or three 45-volt heavy-duty "B" batteries.

LOUDSPEAKER
Type ..... Permanent-magnet Dynamic
Diameter (94BT) ..... 5in., (94BK) ..... 6½ in.
Voice-coil Impedance ..... 3 ohms at 400 cycles

Figure 2—Radiotron Socket Voltages, and Location of Parts

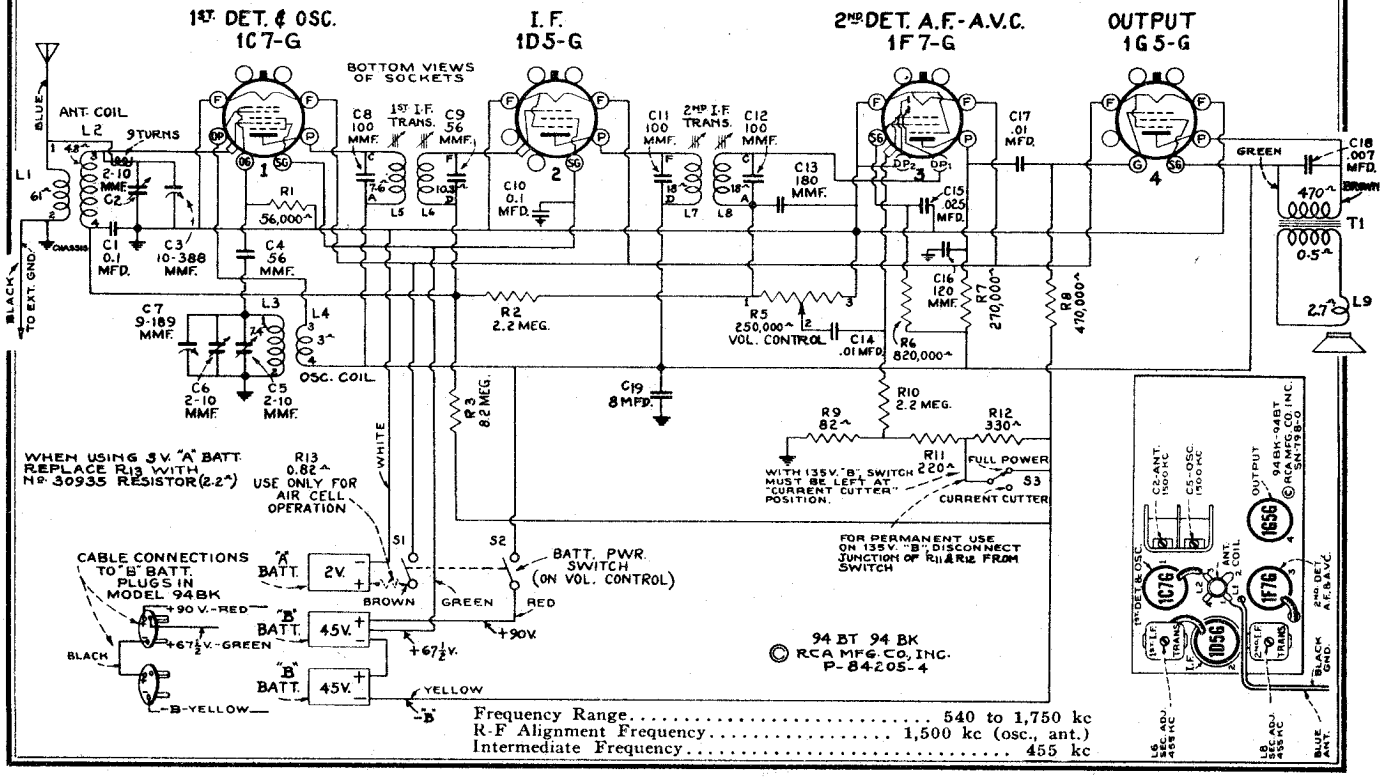

Frequency Range ..... 540 to 1,750 kc
R-F Alignment Frequency ..... 1,500 kc (osc., ant.)
Intermediate Frequency ..... 455 kc

©John F. Rider, Publisher

MODELS 94BK, 94BT
MODEL 94BT6
Parts Lists

RCA MFG. CO., INC.

94BK Replacement Parts 94BT

Insist on genuine factory-tested parts, which are readily identified and may be purchased from authorized dealers.

STOCK No.	DESCRIPTION	Unit List Price
	RECEIVER ASSEMBLIES	
30954	Cable—Battery cable complete	1.35
30949	Capacitor—56 Mmfd. (C9)	.25
12723	Capacitor—56 Mmfd. (C4)	.25
30904	Capacitor—100 Mmfd. (C8, C11, C12)	.25
12724	Capacitor—120 Mmfd. (C16)	.25
13003	Capacitor—180 Mmfd. (C13)	.25
5148	Capacitor—.007 Mfd. (C18)	.20
14393	Capacitor—.01 Mfd. (C14, C17)	.30
4870	Capacitor—.025 Mfd. (C15)	.20
30899	Capacitor—0.1 Mfd. (C1, C10)	.30
13610	Capacitor—8 Mfd. (C19)	1.00
30950	Coil—Antenna coil (L1, L2)	1.10
30895	Coil—Oscillator coil (L3, L4)	1.05
30945	Condenser—2-gang variable tuning condenser (C2, C3, C5, C6, C7)	2.70
30877	Cord—Drive cord	.20
30905	Core—Adjustable core for I.F. transformers	.35
30951	Dial—Dial scale and dial scale holder and bracket assembly	.70
30701	Drum—Tuning condenser drive cord drum with set screw	.40
14635	Indicator—Station selector indicator pointer	.20
30955	Resistor—0.82 ohm, flexible type (R13)	.30
14074	Resistor—82 ohms, ½ watt (R9)	.20
14561	Resistor—220 ohms, ½ watt (R11)	.20
30538	Resistor—330 ohms, ½ watt (R12)	.20
5029	Resistor—56,000 ohms, ½ watt (R1)	.20
12199	Resistor—270,000 ohms, ½ watt (R7)	.20
11172	Resistor—470,000 ohms, ½ watt (R8)	.20
30963	Resistor—820,000 ohms, ½ watt (R6)	.20
12679	Resistor—2.2 meg., ½ watt (R2, R10)	.20
30962	Resistor—8.2 meg., ½ watt (R3)	.20
14887	Retainer—Retainer for knob shaft	.01
30952	Shaft—Station selector knob shaft	.25
3682	Shield—Radiotron shield	.22
11196	Socket—Radiotron socket	.25
30956	Socket—Speaker socket	.30
14191	Spring—Drive cord tension spring	.04
30953	Switch—Current-cutter switch (S3)	.45
30948	Transformer—First I.F. (L5, L6, C8, C9)	2.00
30903	Transformer—Second I.F. (L7, L8, C11, C12)	1.80
30947	Volume control and on-off switch (R5, S1, S2)	1.50
	REPRODUCER ASSEMBLIES	
	Model 94BT (Speaker 84226-1)	
30970	Cone—Reproducer cone and voice coil (L9)	1.25
30969	Reproducer complete	5.65
30971	Transformer—Output transformer (T1)	1.25
	Model 94BK (Speaker 84145-2)	
30973	Cone—Reproducer cone and voice coil (L9)	2.25
30972	Reproducer complete	6.30
30974	Transformer—Output transformer (T1)	1.90
	MISCELLANEOUS ASSEMBLIES	
30975	Crystal—Station selector celluloid crystal	.45
14269	Knob—Station selector or volume control knob	.20
12827	Plug—3-contact male plug for battery cable—94BK only	.20
30935	Resistor—2.2 ohms, flexible type to replace Stock No. 30955 when using 3-volt battery	.30
30308	Screw—Chassis mounting screw and washer—94BT only—Package of 4	.25
30467	Screw—Chassis mounting screw and washer—94BK only—Package of 4	.25
14270	Spring—Retaining spring for knob	.05

BATTERY REQUIRED
6-volt Storage "A" Battery.

CURRENT CONSUMPTION
At 6 volts, 2.8 amperes.

POWER OUTPUT (6 volts "A")
Undistorted ..... 0.45 watts
Maximum ..... 0.7 watts

Operating Controls ..... (1) Power Switch—Volume; (2) Tuning
Tuning Drive Ratio ..... 8 to 1

Replacement Parts 94BTG

Insist on genuine factory-tested parts, which are readily identified and may be purchased from authorized dealers.

STOCK No.	DESCRIPTION	Unit List Price
	RECEIVER ASSEMBLIES	
30959	Cable—Battery cable complete	1.35
30967	Cable—Shielded volume control cable	.45
12723	Capacitor—56 Mmfd. (C8)	.25
30904	Capacitor—100 Mmfd. (C9, C10, C12, C13)	.25
12724	Capacitor—120 Mmfd. (C17)	.25
13003	Capacitor—180 Mmfd. (C14)	.25
30964	Capacitor—330 Mmfd. (C4)	.25
30966	Capacitor—1,000 Mmfd. (C22)	.30
14393	Capacitor—.01 Mfd. (C15, C18, C19)	.30
4937	Capacitor—.01 Mfd. (C27)	.25
4886	Capacitor—.05 Mfd. (C11)	.20
4839	Capacitor—0.1 Mfd. (C16)	.30
30899	Capacitor—0.1 Mfd. (C1)	.30
30965	Capacitor—0.25 Mfd. (C20)	.30
30961	Capacitor—Comprising 2 sections each 16 Mfd. (C23, C24)	2.10
30968	Coil—"A" filter choke coil (L10)	.55
30950	Coil—Antenna coil (L1, L2)	1.10
30895	Coil—Oscillator coil (L3, L4)	1.05
30945	Condenser—2-gang variable tuning condenser (C2, C3, C5, C6, C7)	2.70
30877	Cord—Drive cord	.20
30905	Core—Adjustable core for I.F. transformers	.35
14289	Clips—Battery clips—1 marked "+" and 1 unmarked	.30
30951	Dial—Dial scale and dial scale holder and bracket assembly	.70
30701	Drum—Tuning condenser drive cord drum with set screw	.40
5140	Fuse—Battery cable fuse (F1)	.10
14635	Indicator—Station selector indicator pointer	.20
13220	Resistor—56 ohms, ½ watt (R16)	.20
14074	Resistor—82 ohms, ½ watt (R9)	.20
30498	Resistor—390 ohms, ½ watt (R18)	.20
30681	Resistor—470 ohms, 1 watt (R12)	.22
11353	Resistor—680 ohms, ½ watt (R10)	.20
5175	Resistor—5,600 ohms, ½ watt (R17)	.20
12759	Resistor—15,000 ohms, ½ watt (R3)	.20
14284	Resistor—22,000 ohms, 1/10 watt (R15)	.15
5029	Resistor—56,000 ohms, ½ watt (R1)	.20
11172	Resistor—470,000 ohms, ½ watt (R7, R11)	.20
12679	Resistor—2.2 meg., ½ watt (R4, R6)	.20
30271	Resistor—4.7 meg., ½ watt (R2)	.20
14887	Retainer—Retainer for knob shaft	.01
30952	Shaft—Station selector knob shaft	.25
3682	Shield—Radiotron shield	.22
11196	Socket—Radiotron socket	.25
30956	Socket—Speaker socket	.30
14312	Socket—Vibrator socket	.25
14191	Spring—Drive cord tension spring	.04
30957	Transformer—First I.F. transformer (L5, L6, C9, C10)	1.90
30903	Transformer—Second I.F. transformer (L7, L8, C12, C13)	1.80
30960	Transformer—Vibrator transformer (T1, C21, L11)	5.25
14309	Vibrator—Plug in vibrator (L12)	4.25
30958	Volume control and on-off switch (R5, S1)	1.50
	REPRODUCER ASSEMBLIES (Speaker 84226-1)	
30970	Cone—Reproducer cone and voice coil (L9)	1.25
30969	Reproducer complete	5.65
30971	Transformer—Output transformer (T2)	1.25
	MISCELLANEOUS ASSEMBLIES	
30975	Crystal—Station selector celluloid crystal	.45
14269	Knob—Station selector or volume control knob	.20
30308	Screw—Chassis mounting screw and washer—Package of 4	.25
14270	Spring—Retaining spring for knob	.05

ALL PRICES ARE SUBJECT TO CHANGE OR WITHDRAWAL WITHOUT NOTICE.

©John F. Rider, Publisher

Trimmers, Voltage Alignment, Lead Dress

RCA MFG. CO., INC.

MODEL 94BT6 Schematic, Socket

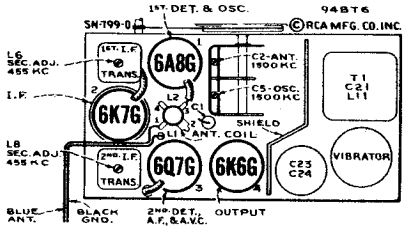

Pre-setting Dial.—With gang condenser in full mesh, the pointer should be horizontal.

Re-sealing I.F. Adjustment Screws.—After completion of alignment, seal the I.F. magnetite-core adjustment screws with a few drops of household cement.

Steps	Connect the high side of test-oscillator to—	Tune test-osc. to—	Turn radio dial to—	Adjust the following for max. peak output
No. 1	6K7-G I-F grid cap, in series with .001 mfd.	455 kc	Quiet point between 550-750 kc	L7 and L8 (2nd I-F transformer)
No. 2	6A8-G 1st-det. grid cap, in series with .001 mfd.	455 kc		L5 and L6 (1st I-F transformer)
No. 3	Antenna lead, in series with 200 mmfd.	1,500 kc	1,500 kc	C5* (oscillator) C2 (antenna)

* Adjust C6 on gang condenser to one complete turn from tight, before adjusting C5.

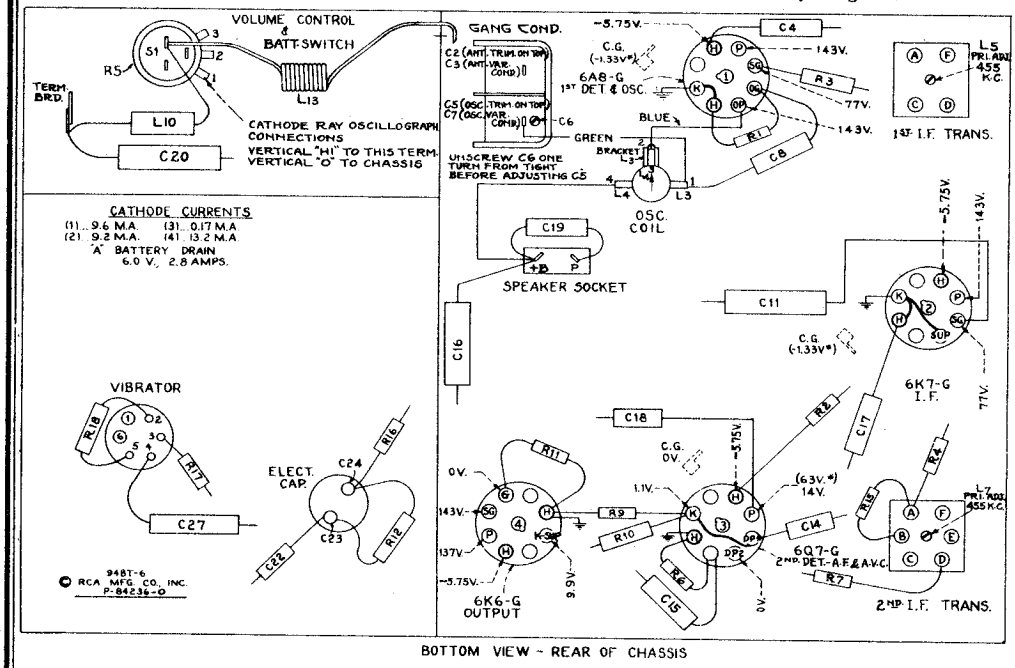

BOTTOM VIEW - REAR OF CHASSIS

Precautionary Lead Dress

1. Leads on C16 and C20, and lead from R16 to terminal board, must be short. C22 and C4 are soldered direct (no leads).
2. Dress L10 away from chassis. Dress T1 secondary leads (brown and green) away from base and free of other leads (same applies to R17 and C27). Dress T1 secondary midtap (brown-black) free of other leads and close to chassis.
3. Maintain original ground points.
4. Antenna and ground leads 36 inches long, twisted, and arranged as shown in top view.
5. I.F. plate lead (blue) dressed close to and along edge of chassis.

Battery Charger Connections.—The positive side of the 6-volt "A" circuit is connected to the receiver chassis, and the chassis is normally grounded. If the charger has a ground on the negative side, the ground should be removed, or changed to the positive side. Do not change the length of leads from the receiver to the battery.

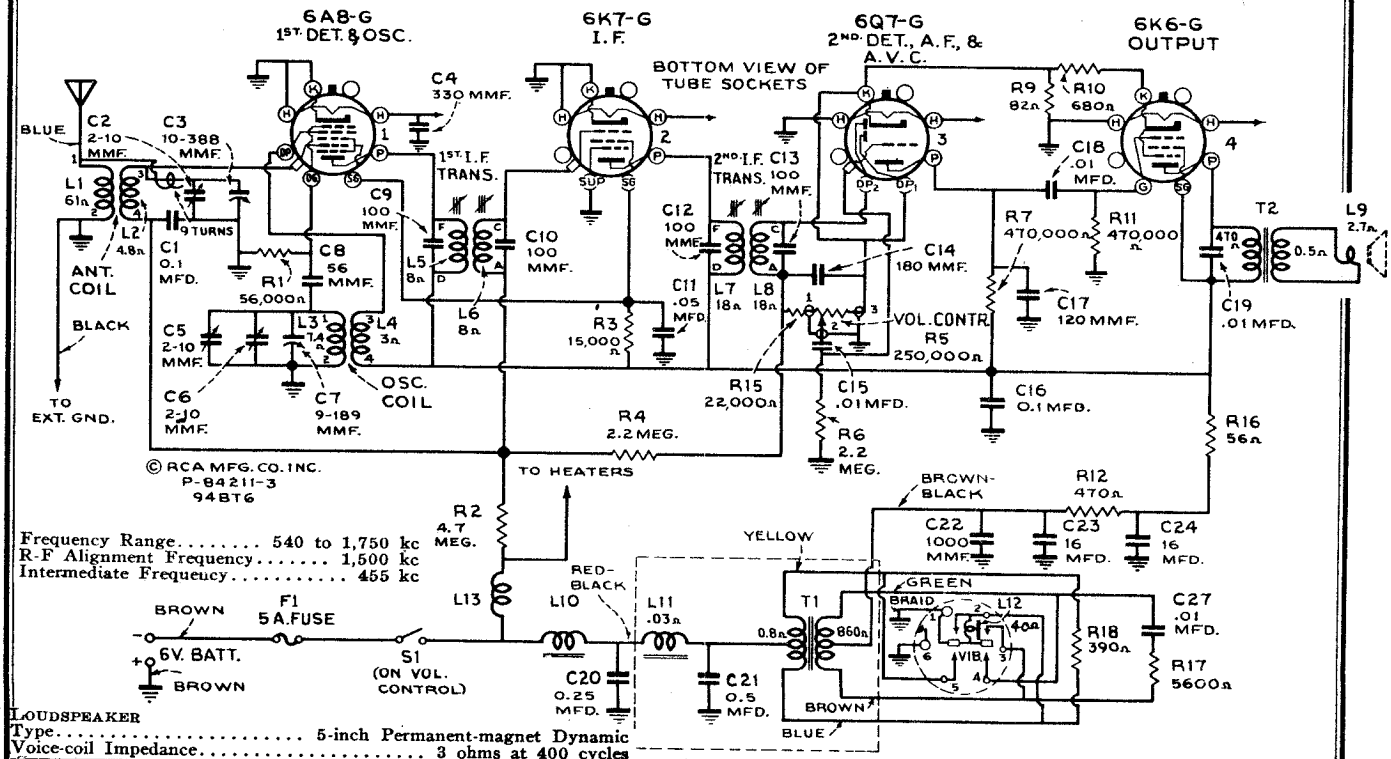

©John F. Rider, Publisher

RCA MFG. CO., INC.

Schematic, Socket, Trimmers Voltage, Alignment, Parts

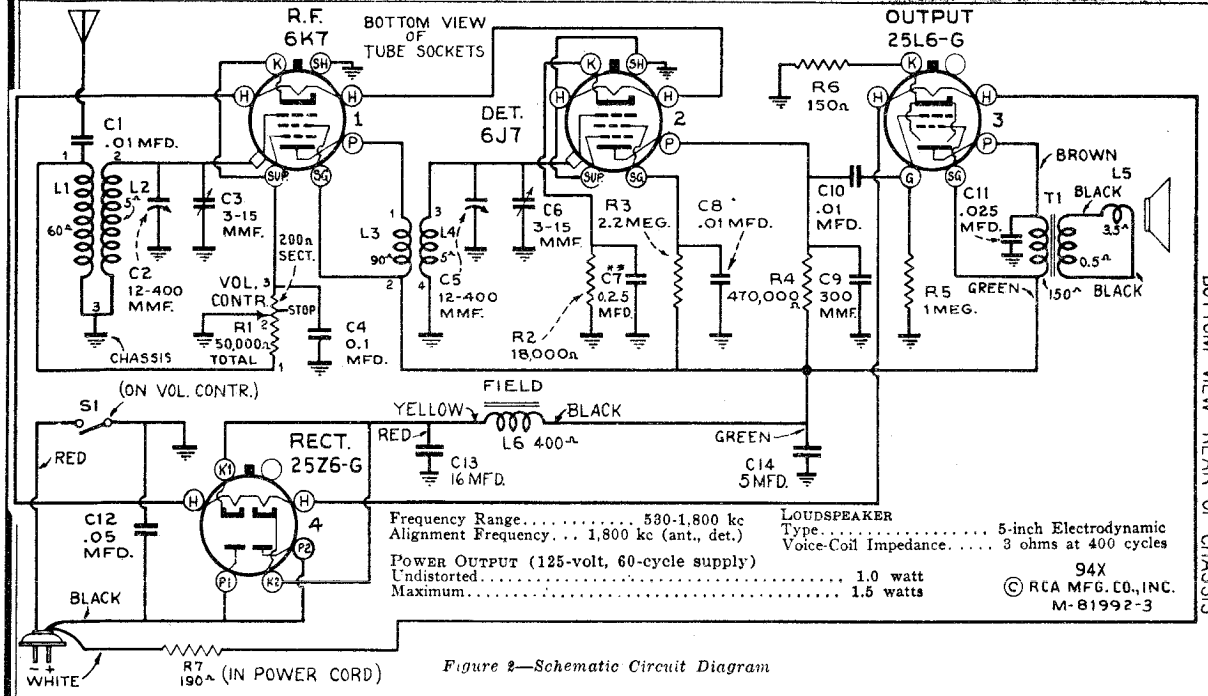

Frequency Range..... 530-1,800 kc
Alignment Frequency... 1,800 kc (ant., det.)

POWER OUTPUT (125-volt, 60-cycle supply)
Undistorted..... 1.0 watt
Maximum..... 1.5 watts

LOUDSPEAKER
Type..... 5-inch Electrodynamic
Voice-Coil Impedance..... 3 ohms at 400 cycles

94X
© RCA MFG. CO., INC.
M-81992-3

Figure 2—Schematic Circuit Diagram

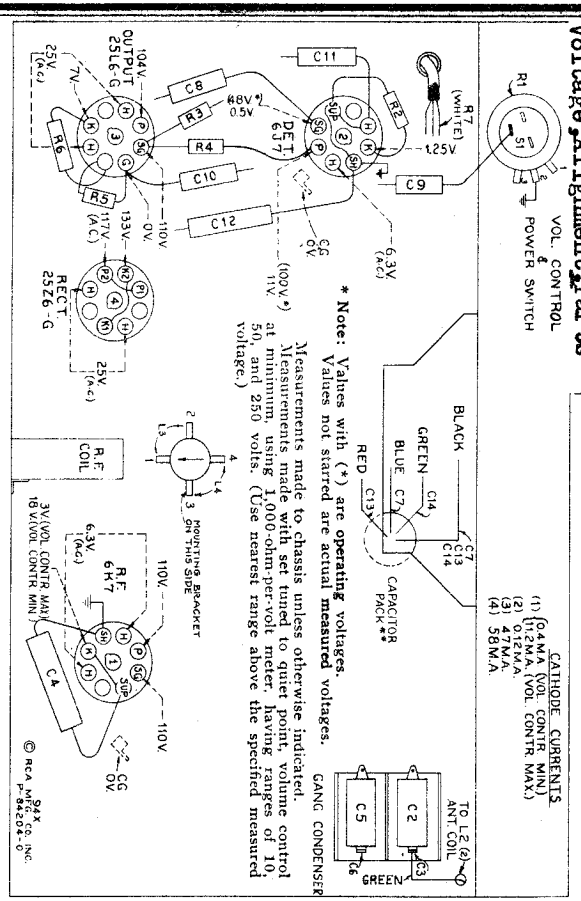

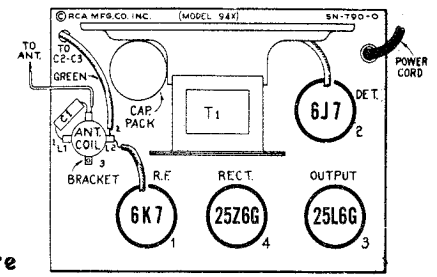

** Some sets have a three-section capacitor pack (C7, C13, C14). In other sets, the pack contains only two capacitors (C13, C14); a separate 0.25 mfd. capacitor being used as C7. The pack furnished for replacement (No. 30873) is a two-section pack and does not include C7. Therefore, when an original three-section pack is replaced by No. 30873, it is necessary to connect a No. 30965 200-volt 0.25 mfd. capacitor from the cathode of the 6J7 to terminal 2 (chassis) on the volume control. This capacitor should be dressed close to the front of chassis.

STOCK No.	DESCRIPTION	Unit List Price
	RECEIVER ASSEMBLIES	
11350	Cap—Grid contact cap	.05
30883	Capacitor—300 Mmfd. (C9)	.30
14393	Capacitor—.01 Mfd. (C1, C8, C10)	.30
30938	Capacitor—.025 Mfd. (C11)	.20
30882	Capacitor—.05 Mfd. (C12)	.20
30899	Capacitor—0.1 Mfd. (C4)	.30
30965	Capacitor—0.25 Mfd. (C7)	.30
30873	Capacitor—Comprising one 16 Mfd. and one 5 Mfd. sections (C13, C14)	1.65
30875	Coil—Antenna coil (L1, L2)	1.10
30876	Coil—R.F. coil (L3, L4)	1.10
30871	Condenser—2-gang variable tuning condenser (C2, C3, C5, C6)	2.50
30877	Cord—Indicator drive cord	.20
30878	Cord—Resistance power cord complete with plug—190 ohms (R7)	1.10
13199	Lead—Antenna lead—approx. 15 ft. long	.50
30880	Resistor—150 ohms, ½ watt (R6)	.20
13045	Resistor—18,000 ohms, ½ watt (R2)	.20
12285	Resistor—470,000 ohms, ½ watt (R4)	.20
13730	Resistor—1 Meg., ½ watt (R5)	.20
11626	Resistor—2.2 Meg., ½ watt (R3)	.20
30879	Shaft—Indicator drive shaft	.40
11196	Socket—Radiotron socket	.25
30631	Spring—Indicator drive cord tension spring	.04
30874	Volume Control and power switch (R1, S1)	1.50
	REPRODUCER ASSEMBLIES (Speaker 84202-1)	
30943	Cone—Reproducer cone and voice coil (L5)	1.00
30942	Reproducer complete	4.60
30944	Transformer—Output transformer (T1)	.85

ALL PRICES ARE SUBJECT TO CHANGE OR WITHDRAWAL WITHOUT NOTICE.

Alignment Procedure

Remove dial pointer by pulling it carefully off the pointer shaft. Remove chassis from cabinet.

CAUTION: The chassis is connected to one side of the power supply. Avoid contact of chassis or parts to external ground when servicing.

Reel up the antenna wire, and connect the high side of test-oscillator through an 80 mmfd. capacitor to the antenna terminal on the antenna transformer. Connect low side of oscillator to receiver chassis through a 0.1 mfd. capacitor. Turn gang condenser to minimum (full out), tune oscillator to 1,800 kc, connect an output meter across the voice coil, and turn volume control to maximum.

Adjust the two trimmers (C3 and C6) on side of gang condenser for maximum output, using lowest possible output from test-oscillator.

Assemble chassis in cabinet and press the pointer on the shaft. Turn pointer, while holding tuning knob, so that the pointer is horizontal and pointing to low-frequency end when the gang condenser is at maximum. Check pointer adjustment on a station.

© John F. Rider, Publisher

RCA MFG. CO., INC.

MODEL 95T5
Schematic, Socket, Trimmers
Chassis Wiring, Voltage

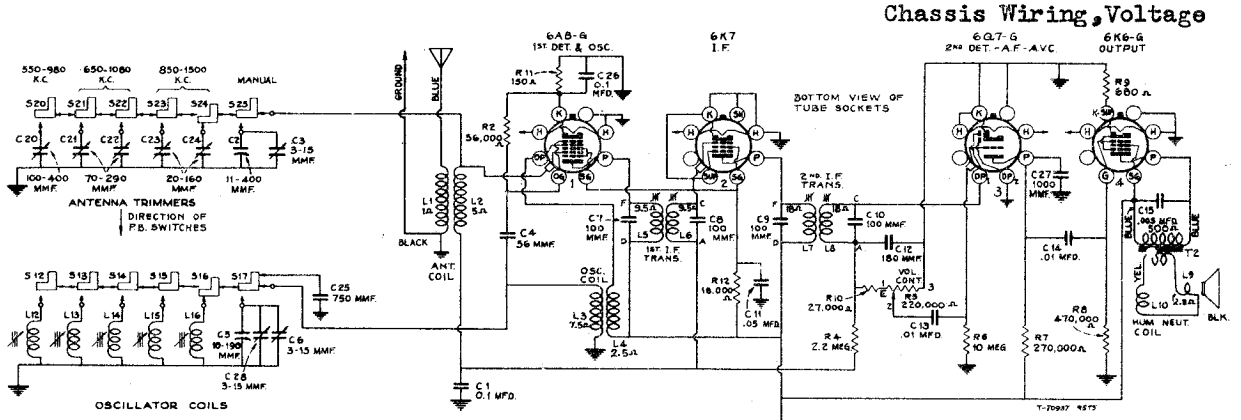

Model 95T5 Schematic Circuit Diagram

IF PEAK 455 KC

FOR OTHER DATA SEE INDEX

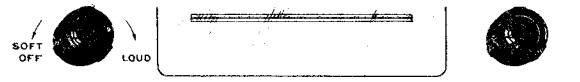

POWER-VOLUME CONTROL 1 2 3 4 5 TUNING CONTROL

Location of Controls, Model 95T5

The right-hand push button is for dial tuning

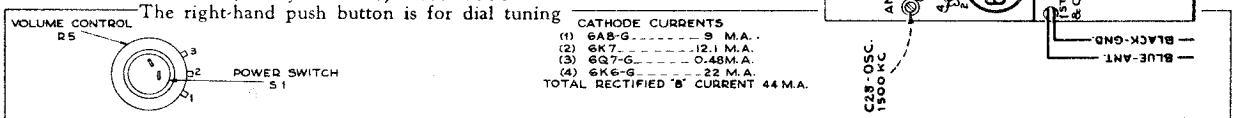

VOLUME CONTROL R5 — POWER SWITCH S1

CATHODE CURRENTS
(1) 6A8-G ..... 9 M.A.
(2) 6K7 ..... 12.1 M.A.
(3) 6Q7-G ..... 0.48M.A.
(4) 6K6-G ..... 22 M.A.
TOTAL RECTIFIED 'B' CURRENT 44 M.A.

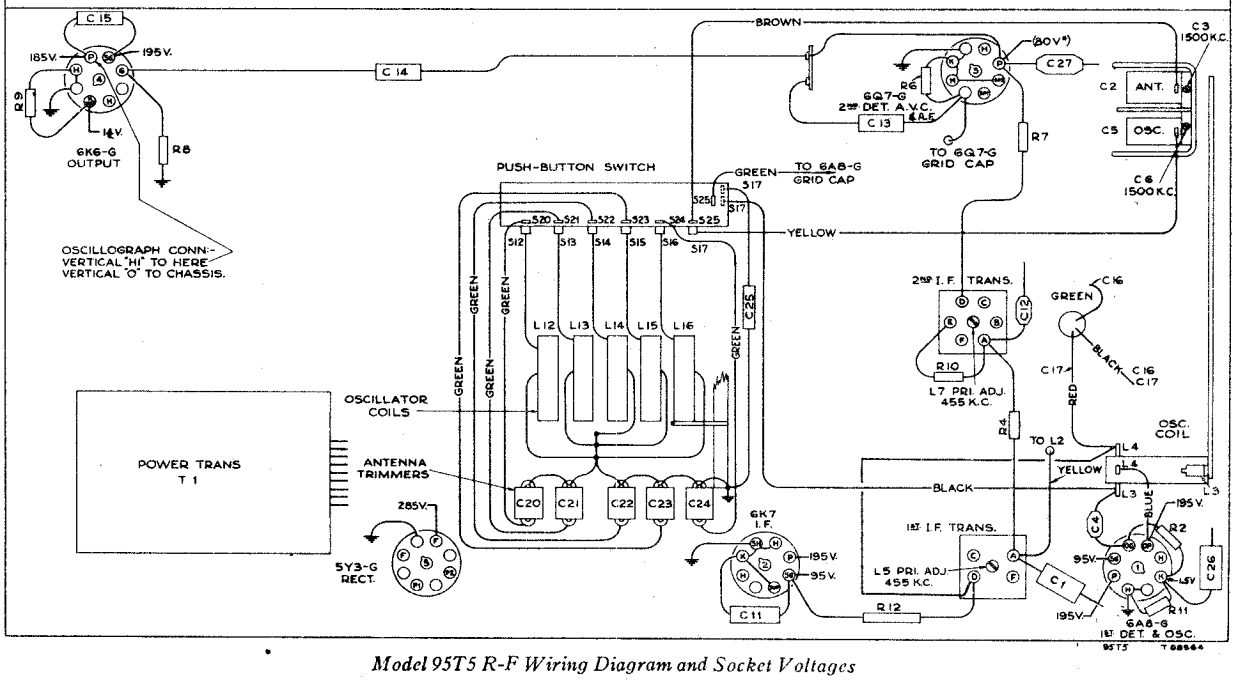

Model 95T5 R-F Wiring Diagram and Socket Voltages

Measurements made to chassis unless otherwise indicated, with set tuned to quiet point and volume control at minimum. Values should hold within approximately ±20% with 117-volt a-c supply.

*** NOTE:** Values with star (*) are operating voltages in circuits with high series-resistance. The actual measured voltages will be lower, depending on the voltmeter loading.

©John F. Rider, Publisher

MODELS 96E, 96T, 96T1 Schematic, Socket Trimmers, Chassis Wiring

RCA MFG. CO., INC.

Replacement Universal Power Transformer. (Stock No. 31575 in 96E, Stock No. 31410 in 95T5. 96T, and 96T1.)

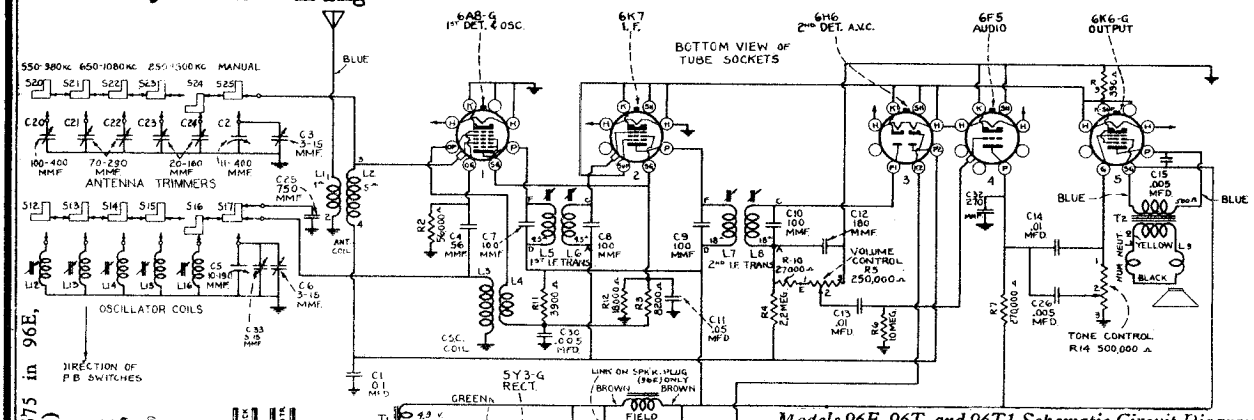

Models 96E, 96T, and 96T1 Schematic Circuit Diagram
(L3 is 7½ ohms, and L4 is 2½ ohms)

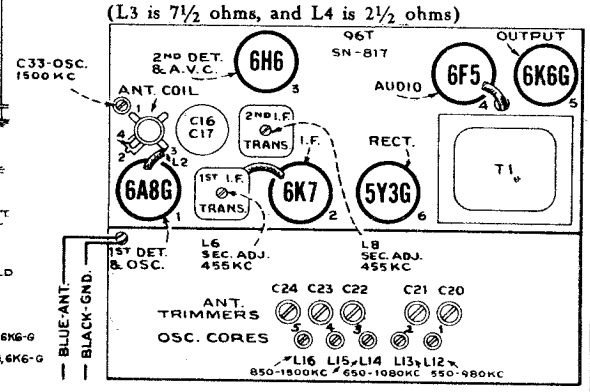

Right — Connections and Colors of Loudspeaker and Cable in Model 96E.

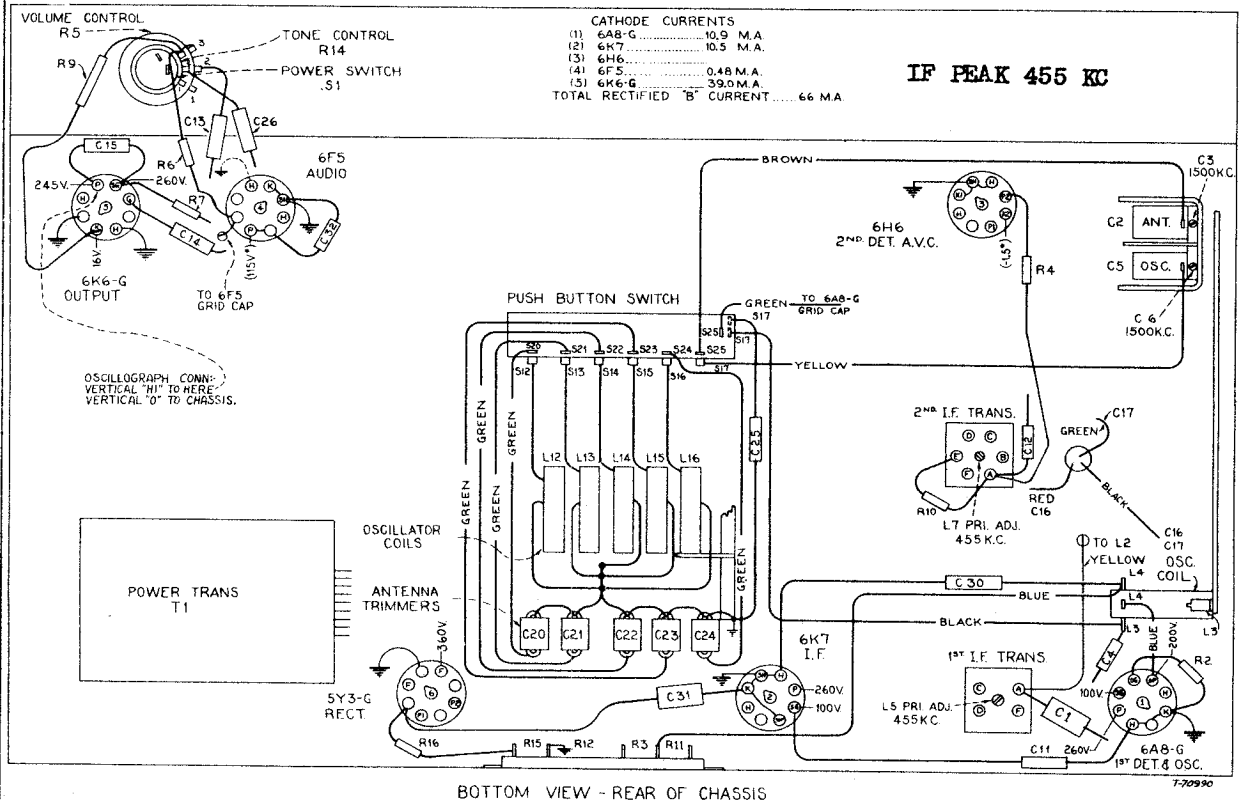

Models 96E, 96T, and 96T1 R-F Wiring Diagram and Socket Voltages

Measurements made to chassis unless otherwise indicated, with set tuned to quiet point and volume control at minimum. Values should hold within approximately ±20% with 117-volt a-c supply.

***NOTE:** Values with star (*) are operating voltages in circuits with high series-resistance. The actual measured voltages will be lower, depending on the voltmeter loading.

©John F. Rider, Publisher

RCA MFG. CO., INC.

MODELS 95T5, 96E, 96T, 96T1
Alignment, Tuner, Specs.

Alignment Procedure

Cathode-Ray Alignment is the preferable method. Connections for the oscillograph are shown in the chassis drawing. Turn the receiver volume control to maximum.

Output Meter Alignment.—If this method is used, connect the meter across the voice coil, and turn the receiver volume control to maximum.

Test-Oscillator.—For all alignment operations, connect the low side of the test-oscillator to the receiver chassis, and keep the output as low as possible to avoid a-v-c action.

Calibration Marks. — The tuning dial is fastened in the cabinet and can not be used for reference during alignment. Therefore calibration marks corresponding to dial readings of 600 kc and 1,500 kc have been stamped in the plate on the front of the chassis, as shown in the accompanying drawing. These marks are used for reference during alignment.

Drum and Dial Indicator Adjustment.—As the first step in r-f alignment, check the position of the drum on the front shaft of the gang condenser. With the gang at maximum (full mesh) the drum set-screw should be pointing directly down as shown in the drawing. With the drum in this position, and the gang at maximum, move the dial indicator along the drive cord to coincide with the left-hand line as shown. The indicator is held to the drive cord by means of spring clips.

After completion of alignment, and after the chassis has been fastened in the cabinet, turn the gang to maximum and note whether the dial indicator is at the left-hand end mark on the dial; if it is not, loosen the drum set-screw (which is accessible through a slot in the bottom of the cabinet), turn the drum slightly so that the indicator is at this mark, and then tighten the set-screw.

After completion of alignment, seal the i-f core-adjustment screws with household cement.

For additional details, refer to booklet, "RCA Victor Receiver Alignment."

Steps	Connect the high side of test-osc. to—	Tune test-osc. to—	Turn radio dial to—	Adjust the following for max. peak output
1	6K7 I-F grid cap, in series with .01 mfd.	455 kc	Quiet point between 550-750 kc	L7 and L8 (2nd I-F Trans.)
2	6A8-G grid cap, in series with .01 mfd.	455 kc		L5 and L6 (1st I-F Trans.)
3	Antenna lead (blue) in series with 200 mmf.	1,500 kc	1,500 kc calibration mark.	C6 (osc.)* C3 (ant.)
4	Follow "Adjustments for Electric Tuning."			

*** The oscillator section of the gang condenser has two trimmers, one on top, accessible through a hole in the chassis, and the other on bottom. It may be necessary to adjust both of these trimmers to secure a peak on 1,500 kc.**

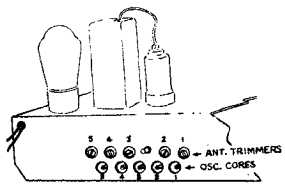

Push-Button Adjustments

No. 1—Approximately 550-980 kc.
Nos. 2, 3—Approximately 650-1,080 kc.
Nos. 4, 5—Approximately 850-1,500 kc.

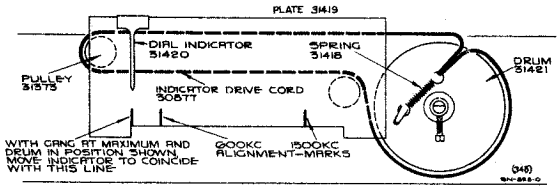

DRUM SHOWN WITH GANG AT MAXIMUM CAPACITY

Dial-Indicator and Drive Mechanism

Refer to "Alignment Procedure" for explanation of the "calibration marks" shown in this drawing

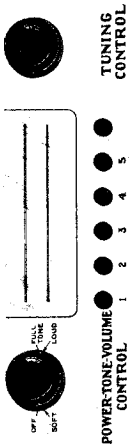

Location of Controls, Models 96E, 96T, and 96T1
The right-hand push button is for dial tuning

Adjustments for Electric Tuning

These models have six push buttons. The right-hand button connects the gang condenser for dial tuning. The other five buttons are for electric tuning of five different stations in the standard-broadcast range. The station buttons connect to separate magnetite-core oscillator coils and separate antenna trimmers which must be adjusted for the desired stations. Use an insulated screwdriver or alignment tool such as RCA Stock No. 31031. Allow at least five minutes warm-up period before making adjustments. Use a regular antenna for the preliminary adjustments.

The procedure is as follows:

1. Make a list of the five desired stations, arranged in order from low to high frequencies.
2. Push in the dial-tuning (right-hand) button, and manually tune in the first station on the list.
3. Push in station-button No. 1 (left-hand) and adjust No. 1 oscillator core (L12) to receive this station. Screw the core all the way in, to lowest frequency, and then unscrew slowly until the station is received.
4. Adjust No. 1 antenna trimmer (C20) for maximum output on this station.
5. Adjust for each of the remaining four stations in the same manner.

(Clockwise adjustment of oscillator cores and antenna trimmers tunes the circuits to lower frequencies.)

6. Make a final careful adjustment of the oscillator cores and antenna trimmers, using one or two feet of wire as an antenna to ensure sharp peaking.

Precautionary Lead Dress.—

1. Dress green lead from antenna coil to switch away from the chassis and gang.
2. Dress green leads from oscillator coils away from the adjustment screws.
3. Dress leads in power-transformer primary circuit to left end of chassis.
4. In 95T5, C27 must be dressed close to chassis and clear of rotor.
5. In 96E, 96T, and 96T1, dress ground bus from heater of 6H6 close to chassis, and dress blue lead from 2nd I-F transformer to volume control close to chassis.

General Description

Model 95T5 is a five-tube superheterodyne. Models 96E, 96T, and 96T1 are six-tube superheterodynes. All of these models have push-buttons for electric-tuning of five stations in the standard-broadcast range, and one push-button for dial-tuning over the entire range of 540 to 1,720 kc.

Features of design include magnetite-core i-f transformers, and magnetite-core electric-tuning oscillator coils; temperature-stabilized capacitor in the oscillator circuit; automatic volume control; electrodynamic loudspeaker, and edge-illuminated straight-line dial. The six-tube models have continuously-variable high-frequency tone control.

Power Output	Model 95T5	Models 96E, 96T, 96T1
Undistorted	1.0 watts	2 watts
Maximum	1.5 watts	4 watts

Power Supply Ratings			
Rating A	105-125 volts, 50-60 cycles	50 watts	75 watts
Rating B	105-125 volts, 25-60 cycles	50 watts	75 watts
Rating C	105-125/200-250 volts, 50-60 cycles	50 watts	75 watts

Loudspeaker (Electrodynamic)	95T5	96E	96T	96T1
Diameter (inches)	5	6	5	6
V. C. Impedance at 400 cycles (ohms)	3.1	2.6	5.0	2.6

Frequency Range ..... 540-1,720 kc
One Station between approximately 550-980 kc (Button No. 1—left)
Two Stations between approximately 650-1,080 kc (Buttons 2 and 3)
Two Stations between approximately 850-1,500 kc (Buttons 4 and 5)
R-F Alignment Frequency ..... 1,500 kc (osc., ant.)
Intermediate Frequency ..... 455 kc

RCA Tube Complement

Model 95T5		Models 96E, 96T, and 96T1	
(1) RCA-6A8-G	First Detector—Oscillator	(1) RCA-6A8-G	First Detector—Oscillator
(2) RCA-6K7	I-F Amplifier	(2) RCA-6K7	I-F Amplifier
(3) RCA-6Q7-G	Second Det., A.V.C., and A-F Amp.	(3) RCA-6H6	Second Det., and A.V.C.
(4) RCA-6K6-G	Power Output	(4) RCA-6F5	Audio Voltage Amplifier
(5) RCA-5Y3-G	Full-Wave Rectifier	(5) RCA-6K6-G	Power Output
		(6) RCA-5Y3-G	Full-Wave Rectifier

Pilot Lamp (1) ..... Mazda 44, 6.3 volts, .25 amp.

©John F. Rider, Publisher

MODELS 95T5,96R,96T,96T1
Push Button Assembly,Parts

RCA MFG. CO., INC.

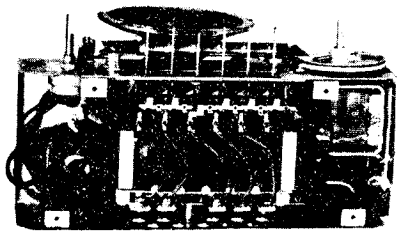

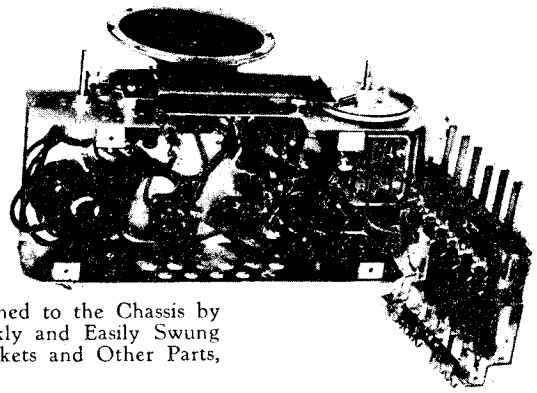

The Push-Button Assembly is Fastened to the Chassis by Only Two Screws, and may be Quickly and Easily Swung out for Convenient Access to the Sockets and Other Parts, as shown in the above Illustrations.

STOCK No.	DESCRIPTION	Unit List Price
	RECEIVER ASSEMBLIES	
31416	Capacitor—Oscillator coils trimmer capacitor bank (C20, C21, C22, C23, C24)	1.20
12723	Capacitor—56 mmfd. (C4)	.35
30904	Capacitor—100 mmfd. (C7, C8, C9, C10)	.25
13003	Capacitor—180 mmfd. (C12)	.35
12488	Capacitor—270 mmfd. (C32)—Models 96T, 96T1 and 96E only	.35
31435	Capacitor—750 mmfd. (C25)	.40
12635	Capacitor—1,000 mmfd. (C27)—Model 95T5 only	.50
4838	Capacitor—.005 mfd. (C15, C26, C30) (C26, C30—Models 96T, 96T1 and 96E only)	.25
14393	Capacitor—.01 mfd. (C13, C14)	.30
4886	Capacitor—.05 mfd. (C11)	.20
30899	Capacitor—0.1 mfd. (C1, C26, C31) (C26 Model 95T5 only) (C31 Models 96T, 96T1 and 96E only)	.30
31423	Capacitor—Comprising 2 sections 5 mfd. each (C16, C17)—Model 95T5 only	1.40
31424	Capacitor—Comprising 2 sections 8 mfd. each (C16, C17)—Models 96T, 96T1 and 96E only	1.65
31382	Clip—Oscillator coil and core mounting clip	.04
30894	Coil—Antenna coil (L1, L2)	.85
31098	Coil—Oscillator coil (L3, L4)	.85
31383	Coil—Oscillator coil (L15, L16)	.30
31384	Coil—Oscillator coil (L13, L14)	.30
31415	Coil—Oscillator coil (L12)	.30
31097	Condenser—2-gang variable tuning condenser (C2, C3, C5, C6, C28)—Model 95T5 only	2.70
31422	Condenser—2-gang variable tuning condenser (C2, C3, C5, C6, C33)—Models 96T, 96T1 and 96E only	2.70
31413	Control—Volume control, tone control, and power switch (R5, R14, S1)—Models 96T, 96T1 and 96E only	3.00
30877	Cord—Indicator drive cord	.20
30905	Core—Adjustable core and stud for i-f transformers	.35
31386	Core—Adjustable core and stud for oscillator coils	.15
31421	Drum—Variable condenser drive cord drum	.45
31420	Indicator—Station selector indicator pointer	.10
11891	Lamp—Dial lamp	.17
31419	Plate—Dial color plate	.12
5040	Plug—4-contact female plug for speaker cable—Model 96E only	.30
31373	Pulley—Indicator drive cord pulley	.08
31425	Resistor—Voltage divider comprising one 22 ohm, one 18,000 ohm, one 8,200 ohm, and one 3,900 ohm sections (R3, R11, R12, R15)—Models 96T, 96T1 and 96E only	.90
13428	Resistor—150 ohms, ½ watt (R11)—Model 95T5 only	.20
31388	Resistor—390 ohms, 1 watt (R9)—Models 96T, 96T1 and 96E only	.22
31024	Resistor—680 ohms, ½ watt (R9)—Model 95T5 only	.20
30151	Resistor—18,000 ohms, 1 watt (R12)—Model 95T5 only	.22
12738	Resistor—27,000 ohms, ½ watt (R10)	.20
12286	Resistor—56,000 ohms, ½ watt (R2)	.20
13734	Resistor—120,000 ohms, ½ watt (R16)—Models 96T, 96T1 and 96E only	.20
12199	Resistor—270,000 ohms, ½ watt (R7)	.20
12285	Resistor—470,000 ohms, ½ watt (R8)—Model 95T5 only	.20
12679	Resistor—2.2 meg., ½ watt (R4)	.20
13601	Resistor—10 meg., ½ watt (R6)	.20
14887	Retainer—Pulley retainer	.01
14350	Screw—No. 8-32 square head set screw for drum Stock No. 31421	.03
31364	Socket—Dial lamp socket	.20
31251	Socket—Radiotron socket	.25
31418	Spring—Indicator drive cord tension spring	.05
31414	Switch—Push button station selector switch (S12, S13, S14, S15, S16, S17, S20, S21, S22, S23, S24, S25)	3.05
31412	Volume control and power switch (R5, S1)—Model 95T5 only	1.50
30957	Transformer—First i-f transformer (L5, L6, C7, C8)	1.90
30903	Transformer—Second i-f transformer (L7, L8, C9, C10)	1.80
31409	Transformer—Power transformer 100-120 volts, 25-60 cycle (T1)—Model 95T5 only	7.25
31574	Transformer—Power transformer 100-120 volts, 25-60 cycle (T1)—Models 96T, 96T1 and 96E only	9.20
31408	Transformer—Power transformer 100-120 volts, 50-60 cycle (T1)—Model 95T5 only	5.30
31380	Transformer—Power transformer 100-120 volts, 50-60 cycle (T1)—Models 96T, 96T1 and 96E only	6.35
31410	Transformer—Power transformer 100-120 and 200-240 volts, 50-60 cycle (T1)—Model 95T5 only	5.80
31575	Transformer—Power transformer 100-120 and 200-240 volts, 50-60 cycle (T1)—Models 96T, 96T1 and 96E only	8.35
	SPEAKER ASSEMBLIES Model 95T5 (Speaker 84326-2)	
31473	Cone—Speaker cone and voice coil (L9)	1.70
31472	Speaker—Complete	4.05
31474	Transformer—Output transformer (T2)	1.65
	SPEAKER ASSEMBLIES Model 96T (Speaker 84326-1)	
31476	Cone—Speaker cone and voice coil (L9)	1.35
31475	Speaker—Complete	4.45
31477	Transformer—Output transformer (T2)	1.00
	SPEAKER ASSEMBLIES Model 96T1 (Speaker 84327-1)	
31443	Cone—Speaker cone and voice coil (L9)	1.40
31663	Speaker—Complete	4.95
31477	Transformer—Output transformer (T2)	1.00
	SPEAKER ASSEMBLIES Model 96E (Speaker 84308-1)	
31443	Cone—Speaker cone and voice coil (L9)	1.40
31442	Speaker—Complete	4.90
31444	Transformer—Output transformer (T2)	1.95
	MISCELLANEOUS ASSEMBLIES	
31428	Button—Station selector switch push button	.06
31429	Dial—Station selector dial scale	.40
31095	Discs—10 celluloid protector discs for call letter markers	.10
31667	Escutcheon—Dial escutcheon—Model 96T1 only	.55
30773	Knob—Volume control or tuning condenser large knob—Models 96T, 96T1 and 96E only	.15
31355	Knob—Tuning condenser small knob—Models 96T, 96T1 and 96E only	.12
30863	Knob—Volume control and power switch, or tuning condenser knob—Model 95T5 only	.15
31391	Knob—Tone control and power switch knob—Models 96T, 96T1 and 96E only	.15
30991	Marker—Station call letter markers	.40
14270	Spring—Retaining spring for knob Stock Nos. 30773 and 31355	.05
30330	Spring—Retaining spring for knob Stock No. 31391	.03
30900	Spring—Retaining spring for knob Stock No. 30863	.05

ALL PRICES ARE SUBJECT TO CHANGE OR WITHDRAWAL WITHOUT NOTICE.

©John F. Rider, Publisher

RCA MFG. CO., INC.

MODELS 96T2, 96K
Schematic, Drive Data
Specifications

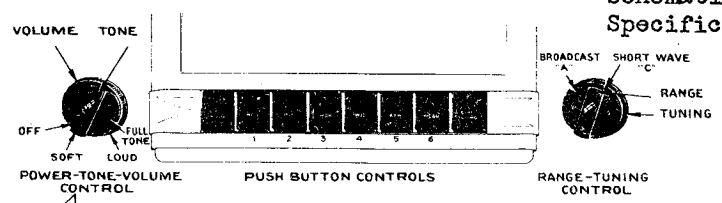

Figure 1—Location of Controls

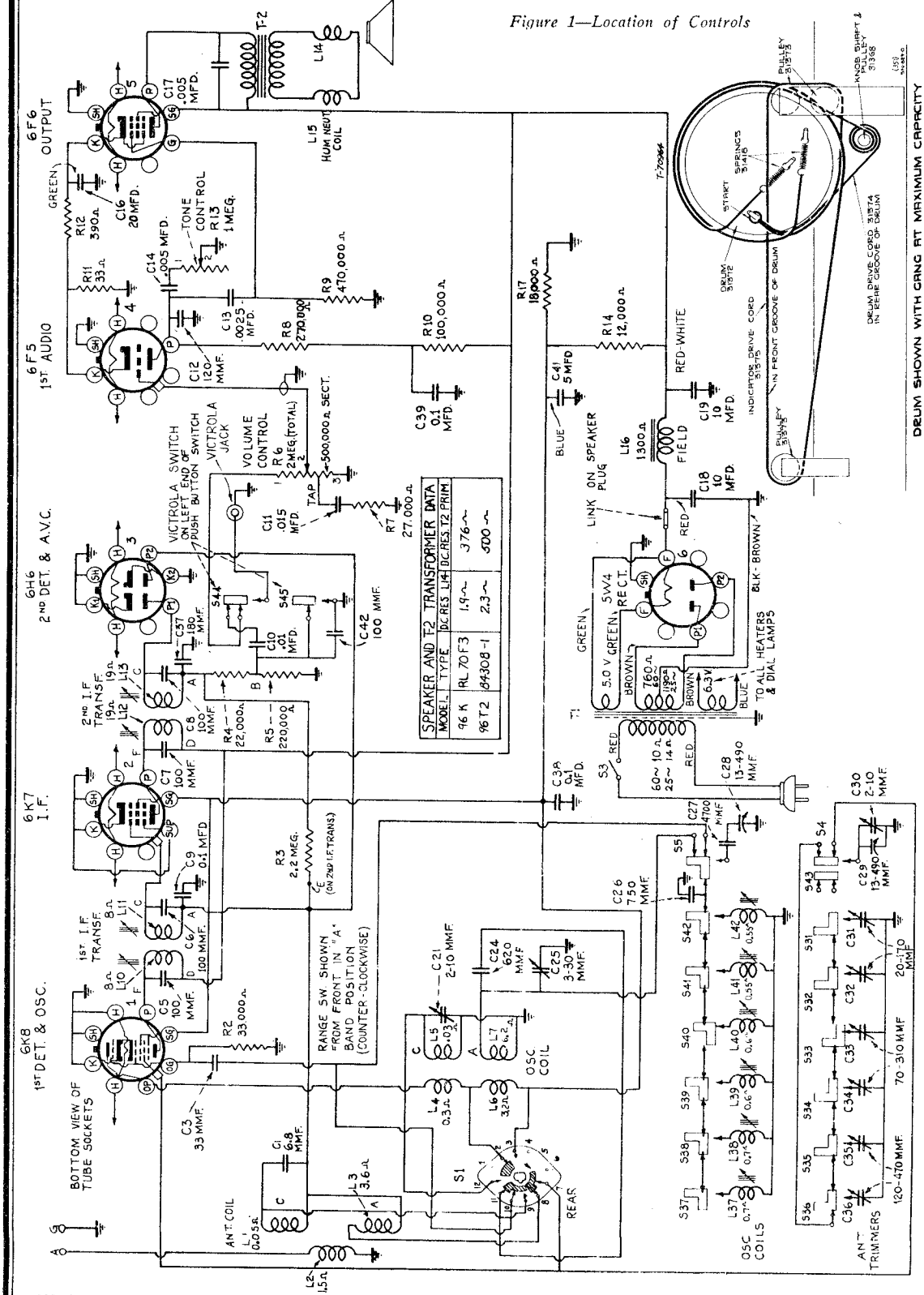

Figure 6—Arrangement of Drive Cords for Tuning Condenser and Dial Indicator

FREQUENCY RANGES

"Standard Broadcast" (A)	540-1,720 kc	
"Short Wave" (C)	5.6-18.0 mc	

R-F ALIGNMENT FREQUENCIES

"Short Wave" (C)	15.2 mc (osc., ant.)
"Standard Broadcast" (A)	1,500 kc (osc.)

Six Electric Tuning Positions ..... 550 to 1,500 kc
Two stations between approximately 550- 950 kc
Two stations between approximately 680-1,180 kc
Two stations between approximately 890-1,500 kc

Intermediate Frequency ..... 455 kc

Pilot Lamps (2) ..... Mazda No. 47, 6.3 volts, 0.15 amp.

POWER SUPPLY RATINGS

Rating A	105-125 volts, 50-60 cycles, 75 watts
Rating B	105-125 volts, 25-60 cycles, 75 watts
Rating C	100-130/140-160/195-250 volts, 40-60 cycles, 75 watts

©John F. Rider, Publisher

MODELS 96T2, 96K
Voltage, Chassis Wiring
Socket, Trimmers
Transformer Data

RCA MFG. CO., INC.

*NOTE: Values with star (*) are operating voltages in circuits with high series resistance. The actual measured voltages will be lower, depending on the voltmeter loading.

Measurements made to chassis unless otherwise indicated, with set tuned to quiet point and volume control at minimum. Values should hold within ±20% with 117-volt a-c supply.

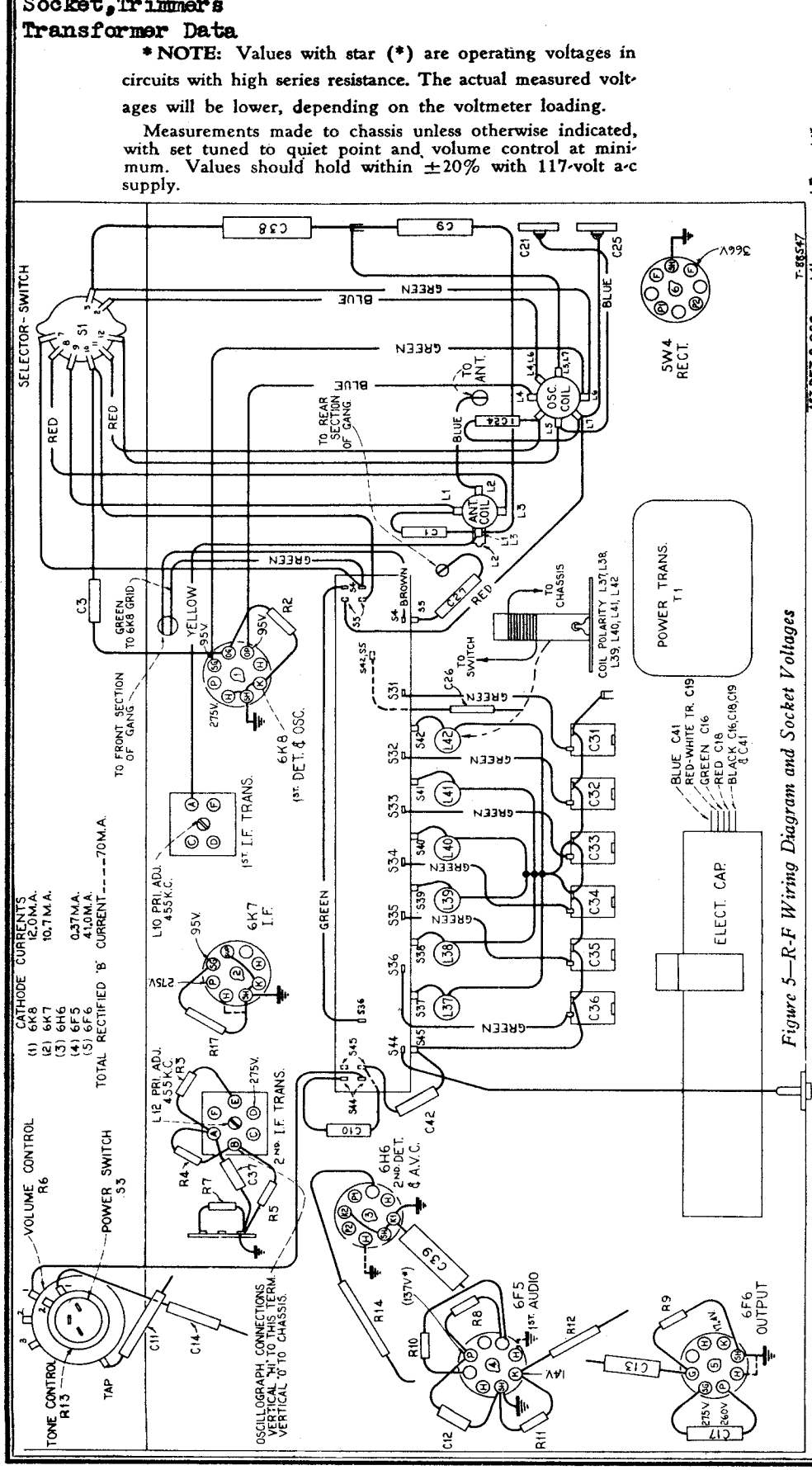

Figure 5—R-F Wiring Diagram and Socket Voltages

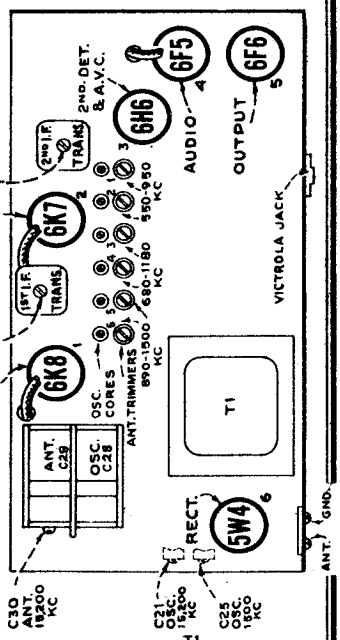

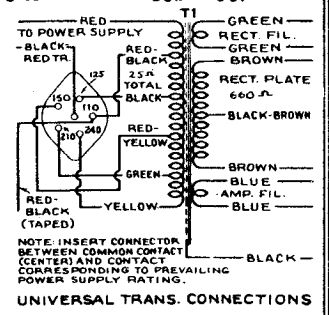

Above — Universal Power Transformer Connections. (110-volt supply for a Victrola Attachment may be obtained by connecting the motor to the red and the red-black leads.)

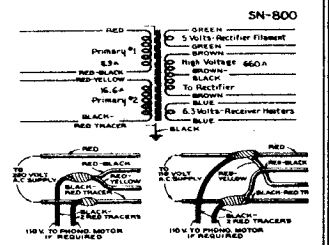

Above—Replacement Universal Power Transformer (Stock No. 31446.)

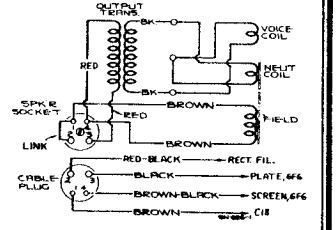

Above — Connections and Colors of Loudspeaker and Cable.

©John F. Rider, Publisher

©John F. Rider, Publisher

Loudspeaker.—Centering of the loudspeaker voice coil is made in the usual manner with three narrow celluloid or paper feelers after first removing the front dust cover. This may be removed by softening its cement with a light application of acetone, using care not to allow the acetone to flow into the air gap. A dust cover should be cemented in place with ambroid upon completion of adjustment.

Precautionary Lead Dress.—(1) Dress 110-volt leads to power transformer away from audio wiring. (2) The 12,000 ohm resistor (R14) should be dressed clear of wiring and parts, since it becomes heated during operation. (3) The leads across back of chassis must be dressed under the electrolytic capacitor to prevent approaching the Victrola jack. (4) All leads in vicinity of antenna coil must be dressed away from the coil windings.

ALIGNMENT PROCEDURE

Cathode-Ray Alignment is the preferable method. Connections for the oscillograph are shown in the chassis drawing.

Output Meter Alignment.—If this method is used, connect the meter across the voice coil, and turn the receiver volume control to maximum.

Test-Oscillator.—For all alignment operations, connect the low side of the test-oscillator to the receiver chassis, and keep the output as low as possible to avoid a-v-c action.

Calibration Scale on Indicator-Drive-Cord Drum. — The tuning dial if fastened in the cabinet and cannot be used for reference during alignment; therefore, a calibration scale is attached to the rear of the drum which is mounted on the front shaft of the gang condenser. The setting of the gang condenser is read on this scale, which is calibrated in degrees. The correct setting of the gang in degrees, for each alignment frequency, is given in the alignment table.

As the first step in r-f alignment, check the position of the drum. The 180° mark on the drum scale must be vertical, and directly over the center of the gang-condenser shaft when the plates are fully meshed. The distance from the front of the chassis to the drum must not exceed ⅜-inch. The drum is held to the shaft by means of two set screws, which must be tightened securely when the drum is in the correct position.

Pointer for Calibration Scale.—Improvise a pointer for the calibration scale by fastening a piece of wire to the gang-condenser frame, and bend the wire so that it points to the "180°" mark on the calibration scale when the plates are fully meshed.

Dial-Indicator Adjustment.—After fastening the chassis in the cabinet, attach the dial indicator to the drive cable with indicator at the 530 kc mark, and gang condenser fully meshed. The indicator has a spring clip for attachment to the cable.

After completion of alignment, seal the i-f core-adjusting screws with household cement.

For additional details, refer to booklet "RCA Victor Receiver Alignment."

Steps	Connect the high side of test-osc. to—	Tune test-osc. to—	Turn radio dial to—	Adjust the following for max. peak output
1	6K7 I-F grid cap, in series with .01 mfd.	455 kc	"A" band, Quiet Point between 550-750 kc	L12 and L13 (2nd I-F Trans.)
2	6K8 det. grid cap, in series with .01 mfd.	455 kc		L10 and L11 (1st I-F Trans.)
3	Antenna Terminal, in series with 400 ohms	15.2 mc	15.2 mc (33.5°) "C" band	C21* (osc.) C30** (ant.)
4	Antenna Terminal in series with 200 mmf.	1,500 kc	1,500 kc (28°) "A" band	C25 (osc.)
5	Follow "Adjustments for Electric Tuning."			

* Use minimum capacity peak if two peaks can be obtained.

** Rock gang slightly while adjusting C30. Check to determine that C21 has been adjusted to the correct peak by tuning to approximately 40.5° (14.29 mc), where a weaker signal should be received.

Note: Oscillator tracks 455 kc above signal on both bands.

ADJUSTMENTS FOR ELECTRIC TUNING

These models have eight push buttons. The left-hand button is a Victrola switch. The right-hand button connects the gang condenser for manual tuning. The other six buttons are for electric tuning of six different stations in the standard broadcast range. The station buttons connect to separate magnetite-core oscillator coils and separate antenna trimmers which must be adjusted for the desired stations. Use an insulated screwdriver or alignment tool such as RCA Stock No. 31031. Allow at least five minutes warm-up period before making adjustments.

The procedure is as follows:

1. Make a list of the desired six stations, arranged in order from low to high frequencies.
2. Use one or two feet of wire as an antenna to ensure sharp peaking.
3. Push in the dial-tuning button, and manually tune in the first station on the list.
4. Push in station button No. 1 (second from left) and adjust No. 1 oscillator core (L37) to receive this station. Screw the core all the way in, to lowest frequency, and then unscrew slowly until station is received.
5. Adjust No. 1 antenna trimmer (C36) for maximum output on this station.

   Clockwise adjustment of cores and trimmers tunes the circuits to lower frequencies.
6. Adjust for each of the remaining five stations in the same manner.
7. Make a final readjustment of the magnetite-cores.

General Description

These receivers employ a two-band superheterodyne circuit which is operated either manually or by electric tuning on standard broadcast, and includes foreign short-wave, aircraft, police, and amateur stations on the short-wave band. Model 96T2 is a table model, and uses a 6-inch electrodynamic loudspeaker. Model 96K is a console, using the same chassis with a 12-inch electrodynamic loudspeaker.

Features of design include magnetite-core adjusted i-f transformers and "Electric Tuning" oscillator coils; jack and switch for Victrola attachment; aural-compensated volume control; continuously variable tone-control; automatic volume control; dust-proof electrodynamic speaker; and straight-line dial.

	96T2	96K
Power Output		
Undistorted	2.0 watts	2.5 watts
Maximum	4.0 watts	4.5 watts
Loudspeaker		
Model	96T2	96K
Type	6 inch, electrodynamic	12 inch, electrodynamic
Voice Coil Impedance at 400 cycles	2.6 ohms	2.2 ohms

REPLACEMENT PARTS

Insist on genuine factory-tested parts, which are readily identified and may be purchased from authorized dealers.

STOCK No.	DESCRIPTION	Unit List Price
	RECEIVER ASSEMBLIES	
14517	Board—Antenna—ground terminal board	.25
31379	Capacitor—Dual trimmer 2-10 Mmfd. and 3-30 Mmfd. (C21, C26)	.40
14079	Capacitor—6.8 Mmfd. (C1)	.35
31387	Capacitor—Antenna coil trimmer capacitor bank 20-470 Mmfd. (C31, C32, C33, C34, C35, C36)	1.30
12948	Capacitor—33 Mmfd. (C3)	.35
12720	Capacitor—100 Mmfd. (C42)	.35
30904	Capacitor—100 Mmfd. (C5, C6, C7, C8)	.25
12724	Capacitor—120 Mmfd. (C12)	.35
13003	Capacitor—180 Mmfd. (C37)	.35
31381	Capacitor—620 Mmfd. (C24)	.45
31435	Capacitor—750 Mmfd. (C26)	.40
31399	Capacitor—4,700 Mmfd. (C27)	.65
5107	Capacitor—.0025 Mfd. (C13)	.20
4838	Capacitor—.005 Mfd. (C14, C17)	.25
14393	Capacitor—.01 Mfd. (C10)	.30
11315	Capacitor—.015 Mfd. (C11)	.20
4839	Capacitor—.1 Mfd. (C9, C38, C39)	.30
31371	Capacitor—Comprising two 10 Mfd., one 20 Mfd., and one 5 Mfd. sections (C18, C19, C16, C41)	2.25
31382	Clip—Oscillator coil and core mounting clip	.04
31378	Coil—Antenna coil—"A" and "C" bands (L1, L2, L3)	1.10
31377	Coil—Oscillator coil—"A" and "C" bands (L4, L5, L6, L7)	1.70
31383	Coil—Oscillator coil—"A" band (L41, L42)	.30
31384	Coil—Oscillator coil—"A" band (L39, L40)	.30
31385	Coil—Oscillator coil—"A" band (L37, L38)	.30
31369	Condenser—2-gang variable tuning condenser (C28, C29, C30)	2.65
31386	Control—Volume control, tone control, and on-off switch (R6, R13, S3)	3.00
31375	Cord—Indicator pointer drive cord	.30
31374	Cord—Variable condenser drum drive cord	.15
30905	Core—Adjustable core and stud for I.F. transformer	.35
31386	Core—Adjustable core and stud for oscillator coil Stock Nos. 31383, 31384, 31385	.15
31372	Drum—Variable condenser drive cord drum and calibrator dial	.65
31480	Lamp—Dial lamp	.20
5040	Plug—4-contact female plug for speaker cable	.30
31373	Pulley—Drive cord pulley	.08
14671	Resistor—33 ohms, 1 watt (R11)	.20
31388	Resistor—390 ohms, 1 watt (R12)	.22
31389	Resistor—12,000 ohms, wire-wound, 5 watts (R14)	.50
30151	Resistor—18,000 ohms, 1 watt (R17)	.22
14284	Resistor—22,000 ohms, 1/10 watt (R4)	.15
12738	Resistor—27,000 ohms, ½ watt (R7)	.20
12454	Resistor—33,000 ohms, ½ watt (R2)	.20
14560	Resistor—100,000 ohms, ½ watt (R10)	.20
12284	Resistor—220,000 ohms, ½ watt (R5)	.20
12199	Resistor—270,000 ohms, ½ watt (R8)	.20
12285	Resistor—470,000 ohms, ½ watt (R9)	.20
12679	Resistor—2.2 meg., ½ watt (R3)	.20
14343	Retainer—Retaining spring for station selector knob shaft	.03
14887	Retainer—Drive cord pulley retainer	.01
4669	Screw—No. 8-32 square head set screw for drum Stock No. 31372	.03
31368	Shaft—Station selector knob shaft and pulley	.30
31418	Spring—Indicator, or drum drive, cord tension spring	.05
31364	Socket—Dial lamp socket	.20
14278	Socket—Pickup socket	.25
31251	Socket—Radiotron socket	.25
31367	Switch—Range switch (S1)	1.05
31370	Switch—Station selector push-button switch (S4, S5, S31, S32, S33, S34, S35, S36, S37, S38, S39, S40, S41, S42, S43, S44, S45)	3.85
30957	Transformer—First I.F. transformer (L10, L11, C5, C6)	1.90
30903	Transformer—Second I.F. transformer (L12, L13, C7, C8)	1.80
31445	Transformer—Power transformer 100-120 volts, 25-60 cycle (T1)	7.80
31380	Transformer—Power transformer 100-120 volts, 50-60 cycle (T1)	6.35
31446	Transformer—Power transformer 100-120 volts, and 200-240 volts, 50-60 cycle (T1)	8.05
	SPEAKER ASSEMBLIES Model 96T2 (Speaker No. 94308-1)	
31443	Cone—Speaker cone and voice coil (L14)	1.40
31442	Speaker—Complete	4.90
31444	Transformer—Output transformer (T2)	1.95
	SPEAKER ASSEMBLIES Model 96K (Speaker No. RL70F-3)	
13866	Cap—Dust cap for cone center	.25
12012	Coil—Field coil (L16)	2.90
11469	Coil—Hum neutralizing coil (L15)	.30
31275	Cone—Speaker cone and voice coil (L14)	1.75
31302	Plug—4-contact male plug	.25
31300	Speaker—Speaker complete	10.95
14358	Screw—Screw, washer, and lockwasher to hold core in yoke	.04
31301	Transformer—Output transformer (T2)	1.70
14357	Washer—Spring washer to hold field coil	.06
	MISCELLANEOUS ASSEMBLIES	
31397	Button—Station selector push-button	.15
31456	Cover—8 protective covers for push-button markers	.08
31396	Dial—Station selector dial scale	.95
31395	Escutcheon—Station selector escutcheon less dial scale and push-buttons	1.15
31392	Indicator—Station selector indicator pointer	.30
31355	Knob—Range switch knob	.12
14359	Knob—Station selector knob	.20
31391	Knob—Tone control knob	.15
30773	Knob—Volume control knob	.15
31589	Marker—Station call letter markers	.35
31457	Marker—"Victrola" marker for push button	.01
31458	Marker—"Dial Tuning" marker for push button	.01
31393	Screen—Station selector dial color screen and light diffuser	.40
11377	Screw—Chassis mounting screws, washers and lockwashers—Model 96K	.03
31390	Screw—Chassis mounting screws, washers and lockwashers—Model 96T2	.10
4982	Spring—Retaining spring for knob Stock No. 14359	.05
14270	Spring—Retaining spring for knob Stock Nos. 31355 and 30773	.05
30330	Spring—Retaining spring for knob Stock No. 31391	.03
31394	Stop—Indicator pointer slide stop	.08

ALL PRICES ARE SUBJECT TO CHANGE OR WITHDRAWAL WITHOUT NOTICE.

MODELS 94X1, 94X2
Schematic, Socket, Trimmers Chassis Wiring, Voltage Tuner, Notes

RCA MFG. CO., INC.

POWER OUTPUT (125-volt, 60-cycle supply)
Undistorted ..... 1.0 watt
Maximum ..... 1.5 watts

LOUDSPEAKER
Type ..... 5-inch Electrodynamic
Voice-Coil Impedance ..... 3 ohms at 400 cycles

In re-assembling, dress the leads to prevent rubbing against the push-button shafts.

CAUTION: The chassis is connected to one side of the power supply. Avoid contact of chassis or parts to external ground when servicing.

Adjustment of Tuning Capacitors

The preferable and quickest method of adjusting the tuning capacitors for six different stations, is to employ a test-oscillator, as described below:

1. Make a list of the desired six stations, arranged in order from low to high frequencies.
2. Determine the correct settings of the test-oscillator for these six frequencies. This is accomplished as follows: Tune in each of the six stations on any standard receiver; zero-beat the test-oscillator against each station, and note the exact setting of the oscillator in each case.
3. Reel up the antenna wire. Connect the high side of test-oscillator through a 60 mmfd. fixed capacitor to the end of the antenna wire. Clip the low side of the oscillator through a 0.1 mfd. capacitor to one of the chassis-mounting screws on the bottom of the cabinet. Tune the oscillator to the previously-determined point for the lowest-frequency station, and adjust for a strong output.
4. Turn the volume control of the push-button receiver, full clockwise, and push in the left-hand end button. Using an insulated screwdriver, peak capacitors C20 and C26, at the same time reducing the output of the oscillator in order to secure a sharp peak. (Clockwise adjustment of the capacitors tunes the circuits to lower frequencies, and counter-clockwise adjustment tunes the circuits to higher frequencies. The range of each trimmer is three full counter-clockwise turns from the tight position. Do not unscrew more than three turns.)
5. Push in the second button from left, and adjust C21 and C27 for peak output with the oscillator tuned to the frequency of the second station.
6. Proceed in this manner to adjust each pair of capacitors for the desired frequencies.
7. Final adjustment may be made in actual reception of the stations.

For convenience in making measurements at the socket contacts, it is advisable to remove the trimmer-and-switch assembly, and make a temporary connection from the chassis to the bottom lug on L4. (This connection is required in order to complete the detector grid circuit.)

Measurements made to chassis unless otherwise indicated.

Measurements made with all station buttons out, volume control at minimum, using 1,000-ohm-per-volt meter, having ranges of 10, 50, and 250 volts. (Use nearest range

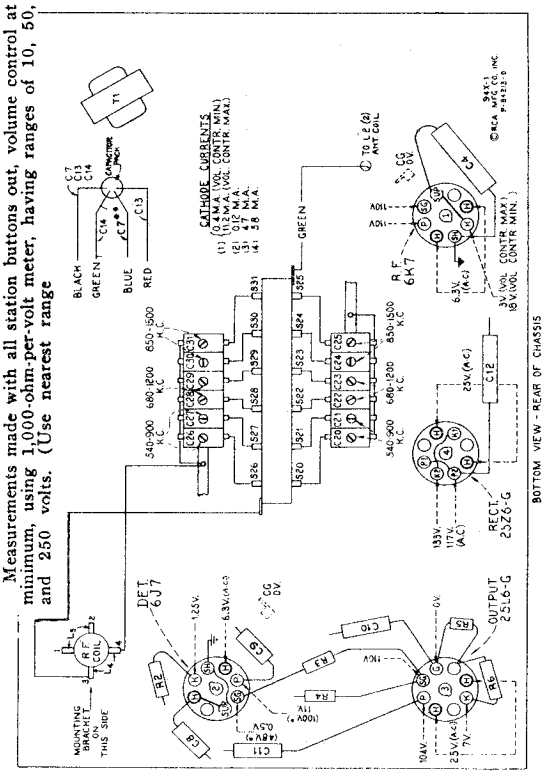

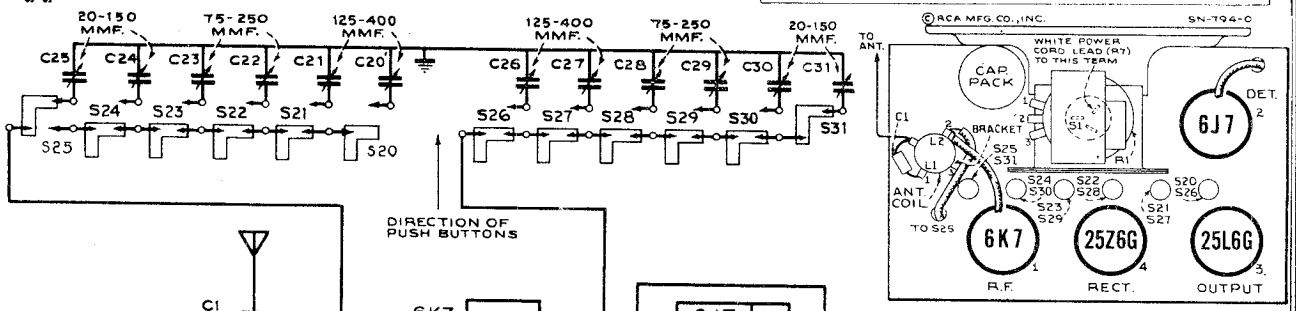

25L6-G OUTPUT

BOTTOM VIEW OF TUBE SOCKETS

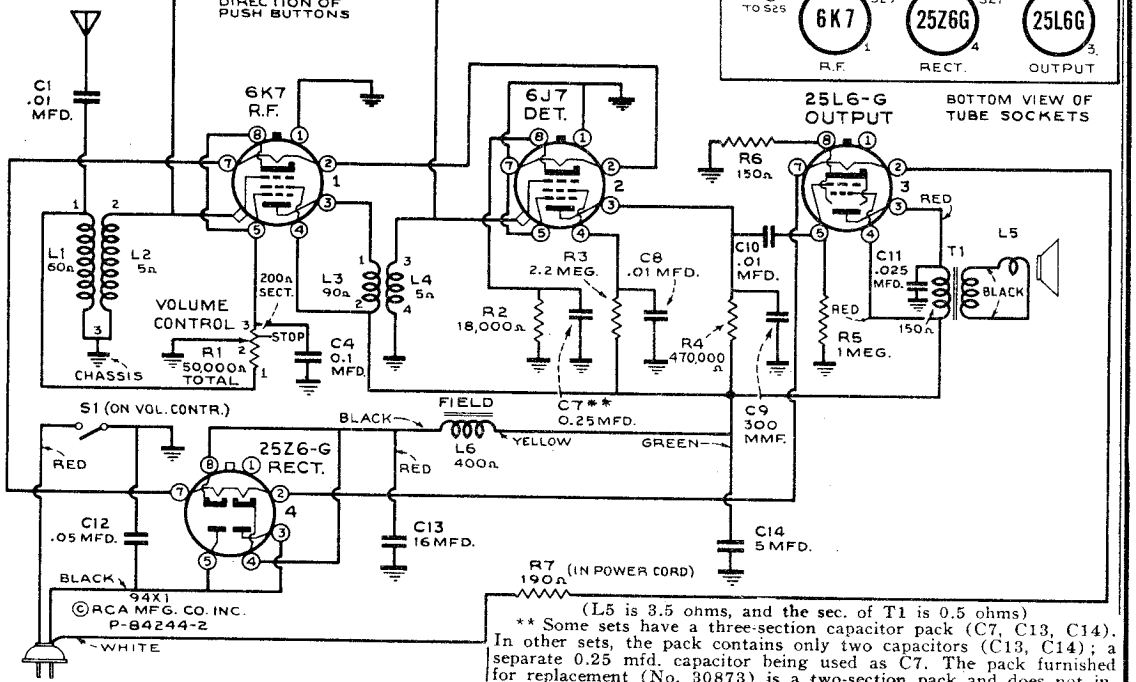

(L5 is 3.5 ohms, and the sec. of T1 is 0.5 ohms)

** Some sets have a three-section capacitor pack (C7, C13, C14). In other sets, the pack contains only two capacitors (C13, C14); a separate 0.25 mfd. capacitor being used as C7. The pack furnished for replacement (No. 30873) is a two-section pack and does not include C7. Therefore, when an original three-section pack is replaced by No. 30873, it is necessary to connect a No. 30965 200-volt 0.25 mfd. capacitor from the cathode of the 6J7 to the ground lug at the output transformer. This capacitor should be dressed close to the front of chassis.

Removing chassis from cabinet.—Remove back plate and volume-control knob. Pull the push-button knobs off their shafts. Remove the 25L6-G output tube. Remove the four chassis screws (bottom of cabinet). Lift the chassis and slide it out at an angle to clear the shaft holes in the top of cabinet.

Removing trimmer-and-switch assembly.—For convenient access to the sockets and parts, it is advisable to remove the trimmer-and-switch assembly. This is a simple operation, accomplished as follows: Remove the two brackets from bottom of chassis, unsolder the three leads that connect to the assembly, remove the two nuts that hold the assembly to the chassis, and lift out the assembly.

FREQUENCY RANGE

Two stations between 540-900 kc
Two stations between 680-1,200 kc
Two stations between 850-1,500 kc

©John F. Rider, Publisher

©John F. Rider, Publisher

RCA MFG. CO., INC.

MODELS 96K2, 96T3, 97E, 97KG, 97T

Schematic, Socket Trimmers, Specs.

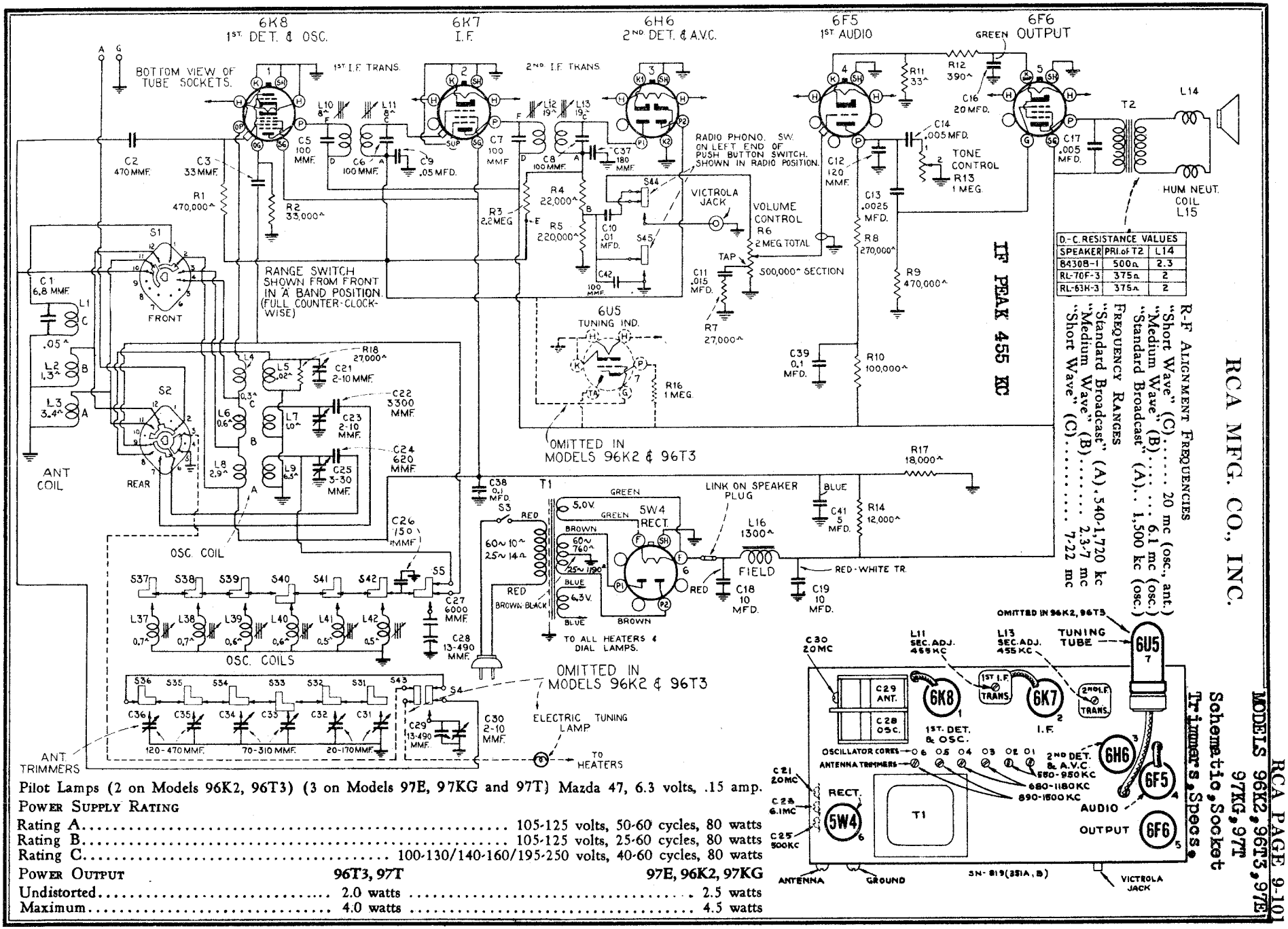

R-F Alignment Frequencies

Frequency Ranges	
"Short Wave" (C)	20 mc (osc., ant.)
"Medium Wave" (B)	6.1 mc (osc.)
"Standard Broadcast" (A)	1,500 kc (osc.)
"Standard Broadcast" (A)	1,540-1,720 kc
"Medium Wave" (B)	2.3-7 mc
"Short Wave" (C)	7-22 mc

D-C. Resistance Values

SPEAKER	PRI. of T2	L14
84308-1	500Ω	2.3
RL-70F-3	375Ω	2
RL-63H-3	375Ω	2

Pilot Lamps (2 on Models 96K2, 96T3) (3 on Models 97E, 97KG and 97T) Mazda 47, 6.3 volts, .15 amp.

Power Supply Rating

Rating A	105-125 volts, 50-60 cycles, 80 watts
Rating B	105-125 volts, 25-60 cycles, 80 watts
Rating C	100-130/140-160/195-250 volts, 40-60 cycles, 80 watts

Power Output	96T3, 97T	97E, 96K2, 97KG
Undistorted	2.0 watts	2.5 watts
Maximum	4.0 watts	4.5 watts

MODELS 96K2, 96T3, 97E
97KG, 97T
RCA MFG. CO., INC.

Chassis Wiring, Voltage
Lead Dress, Transformers
Drive Cord

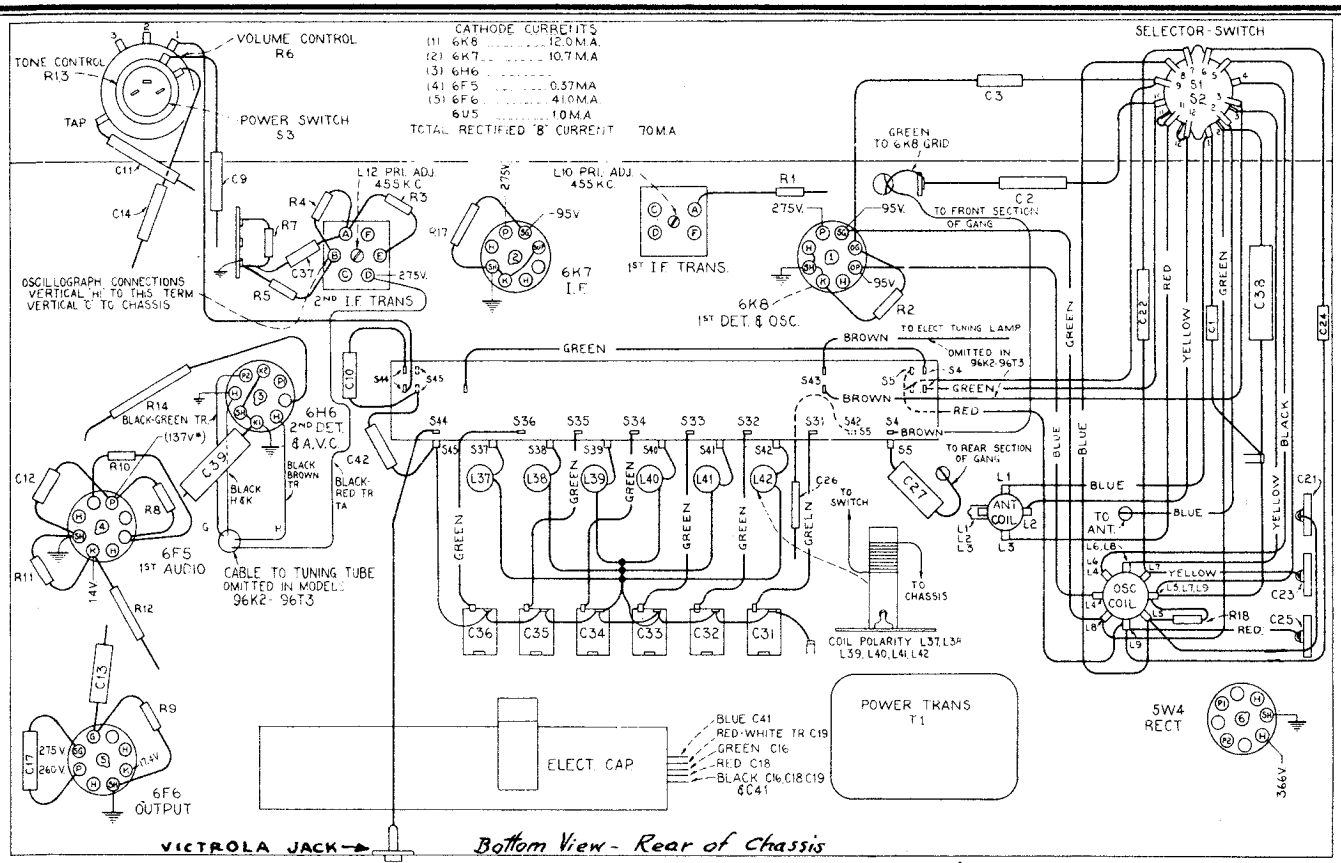

Measurements made to chassis unless otherwise indicated, with set tuned to quiet point and volume control at maximum. Values should hold within ±20% with 117-volt a-c supply.

***NOTE:** Values with star (*) are operating voltages in circuits with high series resistance. The actual measured voltages will be lower, depending on the voltmeter loading.

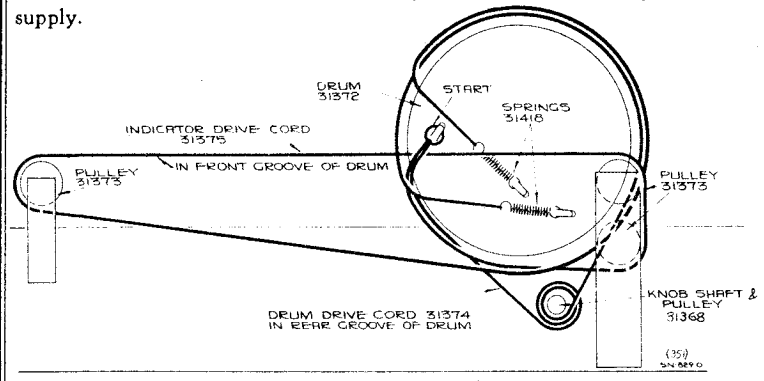

Precautionary Lead Dress.—

1. Dress power-switch leads against left apron to prevent hum pickup.
2. Dress R1 away from front of chassis.
3. Electric-tuning lamp leads must be dressed in front of range switch.
4. Dress lead from L5 to range switch away from other leads.
5. Dress leads away from antenna coil.
6. Dress other parts and leads away from R14, as it becomes heated.
7. Leads across back of chassis should be dressed under electrolytic to prevent approaching Victrola jack.

Figure 6—(At Left) Arrangement of Drive Cords for Tuning Condenser and Dial Indicator

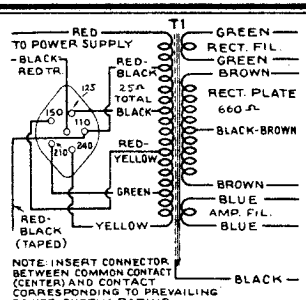

UNIVERSAL TRANS. CONNECTIONS

Above — Universal Power Transformer Connections. (110-volt supply for a Victrola Attachment may be obtained by connecting the motor to the red and the red-black leads.)

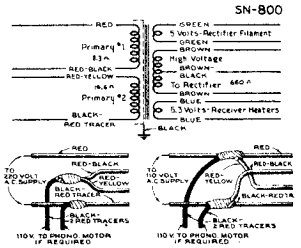

Above—Replacement Universal Power Transformer (Stock No. 31446.)

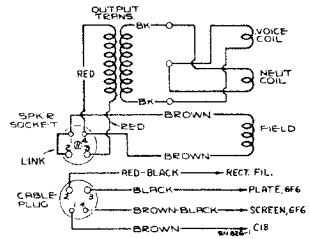

Above — Connections and Colors of Loudspeaker and Cable.

©John F. Rider, Publisher

©John F. Rider, Publisher

LOUDSPEAKER

Type		Electrodynamic
Voice-coil impedance	84308-1 2.6 ohms; RL-70F-3 2.25 ohms; RL-63H-3 2.25 ohms	at 400 cycles

ALIGNMENT PROCEDURE

Cathode-Ray Alignment is the preferable method. Connections for the oscillograph are shown in the chassis drawing.

Output Meter Alignment.—If this method is used, connect the meter across the voice coil, and turn the receiver volume control to maximum.

Test-Oscillator.—For all alignment operations, connect the low side of the test-oscillator to the receiver chassis, and keep the output as low as possible to avoid a-v-c action.

Calibration Scale on Indicator-Drive-Cord drum. — The tuning dial if fastened in the cabinet and cannot be used for reference during alignment; therefore, a calibration scale is attached to the rear of the drum which is mounted on the front shaft of the gang condenser. The setting of the gang condenser is read on this scale, which is calibrated in degrees. The correct setting of the gang in degrees, for each alignment frequency, is given in the alignment table.

As the first step in r-f alignment, check the position of the drum. The 180° mark on the drum scale must be vertical, and directly over the center of the gang-condenser shaft when the plates are fully meshed. The distance from the front of the chassis to the drum must not exceed ⅜-inch. The drum is held to the shaft by means of two set screws, which must be tightened securely when the drum is in the correct position.

Pointer for Calibration Scale.—Improvise a pointer for the calibration scale by fastening a piece of wire to the gang-condenser frame, and bend the wire so that it points to the "180°" mark on the calibration scale when the plates are fully meshed.

Dial-Indicator Adjustment.—After fastening the chassis in the cabinet, attach the dial indicator to the drive cable with indicator at the 530 kc mark, and gang condenser fully meshed. The indicator has a spring clip for attachment to the cable.

After completion of alignment, seal the i-f core-adjusting screws with household cement.

Steps	Connect the high side of test-osc. to—	Tune test-osc. to—	Turn radio dial to—	Adjust the following for max. peak output
1	6K7 I-F grid cap, in series with .01 mfd.	455 kc	"A" band, Quiet Point between 550-750 kc	L12 and L13 (2nd I-F Trans.)
2	6K8 det. grid cap, in series with .01 mfd.	455 kc		L10 and L11 (1st I-F Trans.)
3	Antenna Terminal, in series with 400 ohms	20 mc	20 mc (23°) "C" band	C21* (osc.) C30** (ant.)
4	Antenna Terminal, in series with 400 ohms	6.1 mc	6.1 mc (31°) "B" band	C23 (osc.)†
5	Antenna Terminal, in series with 200 mmf.	1,500 kc	1,500 kc (28½°) "A" band	C25 (osc.)
6	Follow "Adjustments for Electric Tuning"			

* Use **minimum** capacity peak if two peaks can be obtained.

** Rock gang slightly and use **maximum** capacity peak if two peaks can be obtained with C30. Check to determine that C21 has been adjusted to the correct peak by tuning to approximately 28° (19.09 mc), where a weaker signal should be received.

† Use **minimum** capacity peak if two peaks can be obtained. Check to determine that C23 has been adjusted to the correct peak by turning to approximately 49° (5.19 mc), at which point a weaker signal should be received.

Note: Oscillator tracks 455 kc above signal on all bands.

ADJUSTMENTS FOR ELECTRIC TUNING

These models have eight push buttons. The left-hand button is a Victrola switch. The right-hand button connects the gang condenser for manual tuning. The other six buttons are for electric tuning of six different stations in the standard-broadcast range. The station buttons connect to separate magnetite-core oscillator coils and separate antenna trimmers which must be adjusted for the desired stations. Use an insulated screwdriver or alignment tool such as RCA Stock No. 31031. Allow at least five minutes warm-up period before making adjustments.

The procedure is as follows:

1. Make a list of the desired six stations, arranged in order from low to high frequencies.
2. Push in the dial-tuning button, and manually tune in the first station on the list.
3. Push in station button No. 1 (second from left) and adjust No. 1 oscillator core (L37) to receive this station. Screw the core all the way in, to lowest frequency, and then unscrew slowly until station is received.
4. Adjust No. 1 antenna trimmer (C36) for maximum output on this station.

Clockwise adjustment of cores and trimmers tunes the circuits to lower frequencies.

5. Adjust for each of the remaining five stations in the same manner.
6. Make a final careful adjustment of the oscillator cores and antenna trimmers. Use the "Magic Eye" in Models 97E, 97KG, and 97T to ensure sharp peaking. With Model 96T3 or 96K2, use one or two feet of wire as an antenna when making the final adjustments in order to obtain sharp peaking.

Six Electric Tuning Positions..... 550-1,500 kc

2 stations between approximately 550- 950 kc
2 stations between approximately 680-1,180 kc
2 stations between approximately 890-1,500 kc

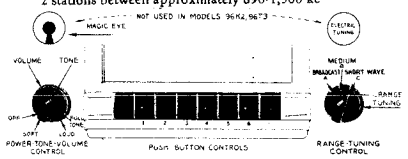

Victrola Attachment.—A jack is provided on the rear of the chassis for connection to a Victrola Attachment. The cable from the Victrola Attachment should be terminated in a Stock No. 31048 plug to fit the jack.

Loudspeaker.—Centering of the loudspeaker voice coil is made in the usual manner with three narrow celluloid or paper feelers after first removing the front dust cover. This may be removed by softening its cement with a light application of acetone, using care not to allow the acetone to flow into the air gap. A dust cover should be cemented in place with ambroid upon completion of adjustment.

REPLACEMENT PARTS

Insist on genuine factory-tested parts, which are readily identified and may be purchased from authorized dealers.

STOCK No.	DESCRIPTION	Unit List Price
	RECEIVER ASSEMBLIES	
14517	Board—Antenna ground terminal board	.25
30752	Bracket—Magic Eye bracket and holder — Models 97T, 97KG, and 97E only	.25
31400	Capacitor—Triple adjustable trimmer two sections 2-10 mmfd., one section 3-30 mmfd. (C21, C23, C25)	.50
14079	Capacitor—6.8 mmfd. (C1)	.35
31387	Capacitor—antenna trimmer capacitor bank 20-470 mmfd. (C31, C32, C33, C34, C35, C36)	1.30
12948	Capacitor—33 mmfd. (C3)	.35
12720	Capacitor—100 mmfd. (C42)	.35
30904	Capacitor—100 mmfd. (C5, C6, C7, C8)	.25
12724	Capacitor—120 mmfd. (C12)	.35
13003	Capacitor—180 mmfd. (C37)	.35
30433	Capacitor—470 mmfd. (C2)	.35
31381	Capacitor—620 mmfd. (C24)	.45
31436	Capacitor—750 mmfd. (C26)	.40
31403	Capacitor—3,300 mmfd. (C22)	.60
31405	Capacitor—8,000 mmfd. (C27)	.75
5107	Capacitor—.0025 mfd. (C13)	.20
4838	Capacitor—.005 mfd. (C14, C17)	.25
14393	Capacitor—.01 mfd. (C10)	.30
4839	Capacitor—0.1 mfd. (C38, C39)	.30
11315	Capacitor—.015 mfd. (C11)	.20
4886	Capacitor—.05 mfd. (C9)	.20
31371	Capacitor—Comprising two 10 mfd., one 20 mfd., and one 5 mfd. sections (C16, C18, C19, C41)	2.25
31382	Clip—Oscillator coil and core mounting clip	.04
31402	Coil—Antenna coil—A, B, and C bands (L1, L2, L3)	1.15
31401	Coil—Oscillator coil—A, B, and C bands (L4, L5, L6, L7, L8, L9)	2.00
31383	Coil—Oscillator coil—A band (L41, L42)	.30
31384	Coil—Oscillator coil—A band (L39, L40)	.30
31385	Coil—Oscillator coil—A band (L37, L38)	.30
31369	Condenser—2-gang variable tuning condenser (C28, C29, C30)	2.65
31366	Control—Volume control, tone control, and on-off switch (R6, R13, S3)	3.00
31375	Cord—Indicator pointer drive cord	.30
31374	Cord—Variable condenser drum drive cord	.15
30905	Core—Adjustable core and stud for i-f transformer	.35
31386	Core—Adjustable core and stud for oscillator coil Stock Nos. 31383, 31384, and 31385	.15
31372	Drum—Variable condenser drive cord drum and calibrator dial	.65
31480	Lamp—Dial lamp	.20
5040	Plug—4-contact female plug for speaker cable	.30
31373	Pulley—Indicator drive cord pulley	.08
14671	Resistor—33 ohms, ½ watt (R11)	.20
31388	Resistor—390 ohms, 1 watt (R12)	.22
31389	Resistor—12,000 ohms, wire wound, 5 watts (R14)	.50
30151	Resistor—18,000 ohms, 1 watt (R17)	.22
14284	Resistor—22,000 ohms, 1/10 watt (R4)	.15
12738	Resistor—27,000 ohms, ½ watt (R7, R18)	.20
12454	Resistor—33,000 ohms, ½ watt (R2)	.20
14560	Resistor—100,000 ohms, ½ watt (R10)	.20
12284	Resistor—220,000 ohms, ½ watt (R5)	.20
12199	Resistor—270,000 ohms, ½ watt (R8)	.20
12285	Resistor—470,000 ohms, ½ watt (R1, R9)	.20
12013	Resistor—1 meg., 1/10 watt (R16)—Models 97T, 97KG, and 97E	.15
12679	Resistor—2.2 meg., ½ watt (R3)	.20
14343	Retainer—Retaining spring for station selector knob shaft	.03
14887	Retainer—Drive cord pulley retainer	.01
4669	Screw—No. 8-32 square head set screw for drum Stock No. 31372	.03
31368	Shaft—Station selector knob shaft and pulley	.30
31418	Spring—Indicator, or drum drive cord tension spring	.05
31364	Socket—Dial lamp socket	.20
31365	Socket—"Electric Tuning" indicator lamp insulated socket	.30
13871	Socket—Magic Eye socket—Models 97T, 97KG, and 97E only	.45
14278	Socket—Pickup socket	.25
31251	Socket—Radiotron socket	.25
31398	Switch—Range switch (S1, S2)	1.25
31370	Switch—Station selector push-button switch (S4, S5, S31, S32, S33, S34, S35, S36, S37, S38, S39, S40, S41, S42, S43, S44, S45)	3.85
30957	Transformer—First i-f transformer (L10, L11, C5, C6)	1.90
30903	Transformer—Second i-f transformer (L12, L13, C7, C8)	1.80
31445	Transformer—Power transformer 100-120 volts, 25-60 cycle (T1)	7.80
31380	Transformer—Power transformer 100-120 volts, 50-60 cycle (T1)	6.35
31446	Transformer—Power transformer 100-120 volts, and 200-240 volts, 50-60 cycle (T1)	8.05
	SPEAKER ASSEMBLIES Models 96T3 and 97T (Speaker 84308-1)	
31443	Cone—Speaker cone and voice coil (L14)	1.40
31442	Speaker—Complete	4.90
31444	Transformer—Output transformer (T2)	1.95
	SPEAKER ASSEMBLIES Models 96K2 and 97KG (Speaker RL-70F-3)	
13866	Cap—Dust cap for cone center	.25
12012	Coil—Field coil (L16)	2.90
11469	Coil—Hum neutralizing coil (L15)	.30
31275	Cone—Speaker cone and voice coil (L14)	1.75
31302	Plug—4-contact male plug	.25
31300	Speaker—Speaker complete	10.95
14358	Screw—Screw, washer, and lockwasher to hold core in yoke	.04
31301	Transformer—Output transformer (T2)	1.70
14357	Washer—Spring washer to hold field coil	.06
	SPEAKER ASSEMBLIES Model 97E (Speaker RL-63H-3)	
14356	Board—3-contact speaker terminal board	.15
13866	Cap—Cone center dust cap	.25
12012	Coil—Field coil (L16)	2.90
11469	Coil—Hum neutraizing coil (L15)	.30
31310	Cone—Speaker cone and voice coil (L14)	1.75
31826	Plug—4-contact male plug for speaker	.30
14358	Screw—Screw, washer, and lockwasher to hold core in yoke	.04
31824	Speaker—Complete	10.45
14355	Transformer—Output transformer (T2)	2.00
14357	Washer—Spring washer to hold field coil	.06
	MISCELLANEOUS ASSEMBLIES	
31397	Button—Station selector push button	.16
31456	Cover—8 protective covers for push button markers	.08
31406	Dial—Station selector dial scale	.90
31543	Disc—"Electric Tuning" indicator disc—Models 97T, 97KG, and 97E only	2.75
31395	Escutcheon—Station selector escutcheon — less dial scale and push buttons	1.15
31407	Escutcheon—"Magic Eye and Electric Tuning" indicator escutcheon—Models 97T, 97KG, and 97E only	.60
31392	Indicator—Station selector indicator pointer	.30
31355	Knob—Range switch knob	.12
14359	Knob—Station selector knob	.20
31391	Knob—Tone control knob	.15
30773	Knob—Volume control knob	.15
31589	Marker—Station call letter markers for push buttons	.35
31458	Marker—"Dial Tuning" marker for push button	.01
31457	Marker—"Victrola" marker for push button	.01
31393	Screen—Station selector dial color screen and light diffuser	.40
11377	Screw—Chassis mounting screws, washers, and lockwashers—Models 96K2, and 97KG only (3 required)	.03
31390	Screw—Chassis mounting screws, washers, and lockwashers—Models 96T3, and 97T only (sufficient for 1 chassis)	.10
11210	Screw—Chassis mounting screws, washers, and lockwashers—Model 97E only (3 required)	.05
4982	Spring—Retaining spring for knob Stock No. 14359	.06
14270	Spring—Retaining spring for knob Stock Nos. 31355 and 30773	.05
30330	Spring—Retaining spring for knob Stock No. 31391	.03
31394	Stop—Indicator pointer slide stop	.08

ALL PRICES ARE SUBJECT TO CHANGE OR WITHDRAWAL WITHOUT NOTICE.

MODEL 95T
Schematic, Socket, Trimmers
Voltage, Chassis Wiring
Alignment, Parts, Specs.

RCA MFG. CO., INC.

Dial lamp..... Mazda No. 46, 6.3 volts, 0.25 amps.

POWER OUTPUT (125-volt, a-c supply)
Undistorted ..... 1.0 watt
Maximum ..... 2.0 watts

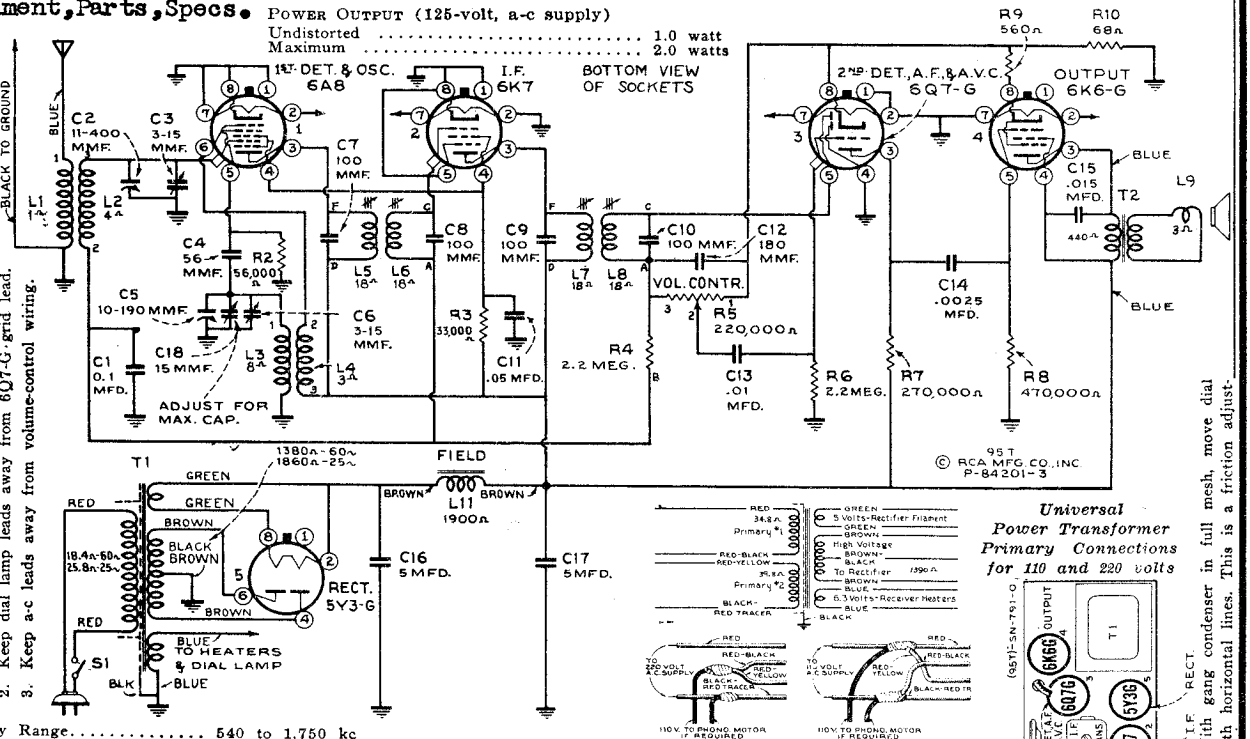

Precautionary Lead Dres.

1. Keep lead from high side of volume control (contact 3) away from capacitor in plate circuit of output tube.
2. Keep dial lamp leads away from 6Q7-G grid lead.
3. Keep a-c leads away from volume-control wiring.

Universal Power Transformer Primary Connections for 110 and 220 volts

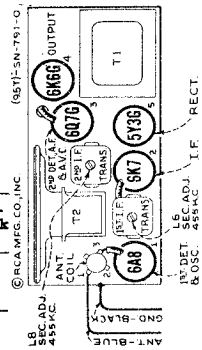

Frequency Range..... 540 to 1,750 kc
R-F Alignment Frequency... 1,500 kc (osc., ant.)
Intermediate Frequency..... 455 kc

Figure 3—Schematic Circuit Diagram

Presetting dial. With gang condenser in full mesh, move dial pointer to coincide with horizontal lines. This is a friction adjustment.

Steps	Connect the high side of test-oscillator to—	Tune test-osc. to—	Turn radio dial to—	Adjust the following for max. peak output
No. 1	6K7 I-F grid cap, in series with .01 mfd.	455 kc	Quiet point between 550-750 kc	L7 and L8 (2nd I-F Transformer)
No. 2	6A8 1st-det. grid cap, in series with .01 mfd.	455 kc		L5 and L6 (1st I-F Transformer)
No. 3	Antenna lead, in series with 200 mmfd.	1,500 kc	1,500 kc (Top of "1" in 150)	C6* (oscillator) C3 (antenna)

* Trimmer C18 on gang condenser should be screwed clockwise for maximum capacity before adjusting C6.

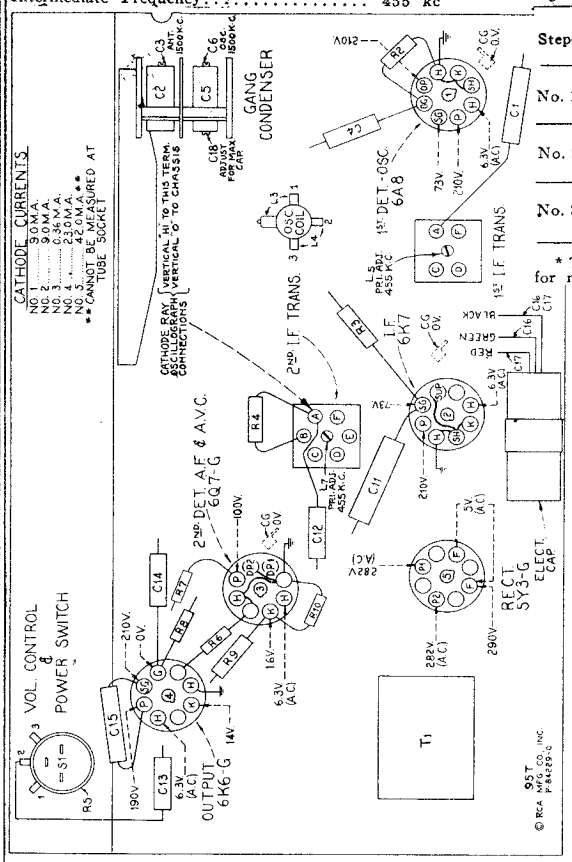

LOUDSPEAKER

Type..... 5-inch Electrodynamic
Voice-coil Impedance..... 3.4 ohms at 400 cycles

POWER SUPPLY RATINGS

Rating A..... 105-125 volts, 50-60 cycles, 50 watts
Rating B..... 105-125 volts, 25-60 cycles, 50 watts
Rating C..... 105-125/200-250 volts, 50-60 cycles, 50 watts

STOCK No.	DESCRIPTION	Unit List Price
	RECEIVER ASSEMBLIES	
30892	Bracket—Station selector dial scale holder with indicator shaft and drive bearing assembly...	.55
11350	Cap—Grid connector cap.....	.05
12723	Capacitor—56 Mmfd. (C4).....	.25
30904	Capacitor—100 Mmfd. (C7, C8, C9, C10)....	.25
13003	Capacitor—180 Mmfd. (C12).....	.25
5107	Capacitor—.0025 Mfd. (C14).....	.20
4858	Capacitor—.01 Mfd. (C13).....	.25
11315	Capacitor—.015 Mfd. (C15).....	.20
4886	Capacitor—.05 Mfd. (C11).....	.20
30899	Capacitor—0.1 Mfd. (C1).....	.30
30898	Capacitor—Comprises two 5 Mfd. sections (C16, C17).....	1.45
30894	Coil—Antenna coil (L1, L2).....	.85
30895	Coil—Oscillator coil (L3, L4).....	1.05
30890	Condenser—2-gang variable tuning condenser (C2, C3, C5, C6, C18).....	2.55
30877	Cord—Indicator drive cord.....	.20
30905	Core—Adjustable core and stud for I.F. transformers.....	.35
30893	Dial—Station selector dial scale and lamp bracket assembly.....	.60
30896	Indicator—Station selector indicator pointer...	.40
5226	Lamp—Dial lamp.....	.17
11361	Resistor—68 ohms, ½ watt (R10).....	.20
5164	Resistor—560 ohms, ½ watt (R9).....	.20
8072	Resistor—33,000 ohms, ½ watt (R3).....	.20
5029	Resistor—56,000 ohms, ½ watt (R2).....	.20
12199	Resistor—270,000 ohms, ½ watt (R7).....	.20
11172	Resistor—470,000 ohms, ½ watt (R8).....	.20
13998	Resistor—2.2 Meg., ½ watt (R4, R6).....	.20
14114	Socket—Dial lamp socket assembly.....	.25
11196	Socket—Radiotron socket.....	.25
30631	Spring—Indicator drive cord tension spring...	.03
30902	Transformer—First I.F. transformer (L5, L6, C7, C8).....	1.80
30903	Transformer—Second I.F. transformer (L7, L8, C9, C10).....	1.80
30889	Transformer—Power transformer 105-125 volts, 25-60 cycle (T1).....	7.65
30888	Transformer—Power transformer 110 and 220 volts, 50-60 cycle (T1).....	6.00
30891	Volume Control and power switch (R5, S1)...	1.50

	REPRODUCER ASSEMBLIES (Speaker 84202-2)	
30940	Cone—Reproducer cone and voice coil (L9)....	1.00
30939	Reproducer complete.....	4.50
30941	Transformer—Output transformer (T2).....	.85

ALL PRICES ARE SUBJECT TO CHANGE OR WITHDRAWAL WITHOUT NOTICE.

©John F. Rider, Publisher

MODEL 97X
Schematic, Specs.
Lead Dress, Notes

RCA MFG. CO., INC.

Frequency Range ..... 540-1,720 kc
One Station between approximately 550-980 kc (Button No. 1—left)
Two Stations between approximately 650-1,080 kc (Buttons 2 and 3)
Two Stations between approximately 850-1,500 kc (Buttons 4 and 5)
R-F Alignment Frequency ..... 1,500 kc (osc., ant.)
Intermediate Frequency ..... 455 kc

RCA Tube Complement

(1) RCA-6A8-G ..... First Detector—Oscillator
(2) RCA-6K7 ..... I-F Amplifier
(3) RCA-6H6 ..... Second Det., and A.V.C.
(4) RCA-6F5 ..... Audio Voltage Amplifier
(5) RCA-25L6-G ..... Power Output
(6) RCA-25Z6-G ..... Half-Wave Rectifier

Pilot Lamp (1) ..... Mazda 47, 6.3 volts, .15 amp.

Loudspeaker (Electrodynamic)

Diameter (inches) ..... 5.
V. C. Impedance at 400 cycles ..... 3.0 ohms

Power Output

Undistorted ..... 1.0 watts
Maximum ..... 1.5 watts

Power Supply Rating

A-C Rating ..... 105-125 volts, 50-60 cycles, 55 watts
D-C Rating ..... 105-125 volts, 55 watts

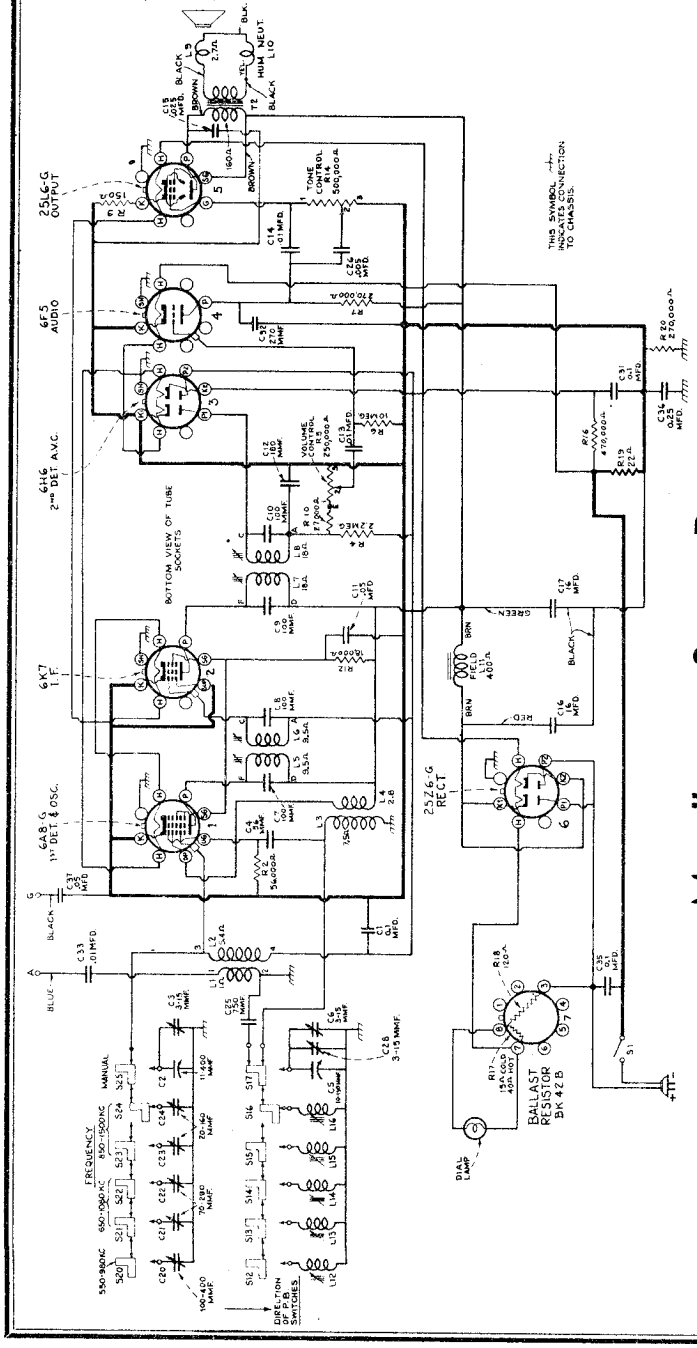

Miscellaneous Service Data

To center the loudspeaker voice coil, first remove the front dust cover by applying acetone sparingly, then loosen the spider screws, insert three narrow feelers in the gap, and tighten the spider screws. Remove the feelers and fasten a dust cover in place with loudspeaker cement.

Removing Push-Button Assembly.—The push-button assembly is held to the chassis by two nuts on the front apron, and may be quickly and easily swung out for convenient access to the sockets and other parts. No unsoldering is required, as flexible leads are used for all connections from the chassis to the assembly.

Precautionary Lead Dress.—

1. Dress green lead from antenna coil to switch away from the chassis and gang.
2. Dress green leads from trimmer bank away from the oscillator-core adjustment screws.
3. Dress heater lead from 6H6 to 6A8-G away from the 2nd I.F. transformer.
4. Dress black lead from electrolytic to volume control against front apron.

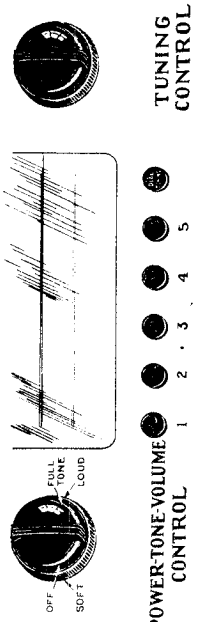

Location of Controls

The right-hand push button is for dial tuning.

©John F. Rider, Publisher

MODEL 97X
Socket, Trimmers
Alignment, Tuner

RCA MFG. CO., INC.

ALIGNMENT PROCEDURE

Cathode-Ray Alignment is the preferable method. Connections for the oscillograph are shown in the chassis drawing. Turn the receiver volume control to maximum.

Output Meter Alignment.—If this method is used, connect the meter across the voice coil, and turn the receiver volume control to maximum.

Test-Oscillator.—For all alignment operations, connect the low side of the test-oscillator to the black lead and keep the output as low as possible to avoid a-v-c action.

Calibration Marks. — The tuning dial is fastened in the cabinet and can not be used for reference during alignment. Therefore calibration marks corresponding to dial readings of 600 kc and 1,500 kc have been stamped in the plate on the front of the chassis, as shown in the accompanying drawing. These marks are used for reference during alignment.

Drum and Dial Indicator Adjustment.—As the first step in r-f alignment, check the position of the drum on the front shaft of the gang condenser. With the drum at maximum (full mesh) the drum set-screw should be pointing directly down as shown in the drawing. With the drum in this position, and the gang at maximum, move the dial indicator along the drive cord to coincide with the left-hand line as shown. The indicator is held to the drive cord by means of spring clips.

After completion of alignment, and after the chassis has been fastened in the cabinet, turn the gang to maximum and note whether the dial indicator is at the left-hand end mark on the dial; if it is not, loosen the drum set-screw (which is accessible through a slot in the bottom of the cabinet), turn the drum slightly so that the indicator is at this mark, and then tighten the set-screw.

After completion of alignment, seal the i-f core-adjustment screws with household cement.

For additional details, refer to booklet, "RCA Victor Receiver Alignment."

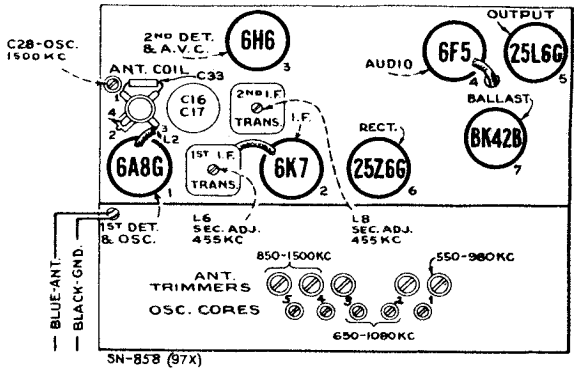

Tube and Trimmer Locations

Steps	Connect the high side of test-osc. to—	Tune test-osc. to—	Turn radio dial to—	Adjust the following for max. peak output
1	6K7 I-F grid cap, in series with .01 mfd.	455 kc	Quiet point between 550-750 kc	L7 and L8 (2nd I-F Trans.)
2	6A8-G grid cap, in series with .01 mfd.	455 kc		L5 and L6 (1st I-F Trans.)
3	Antenna lead (blue) in series with 200 mmf.	1,500 kc	1,500 kc calibration mark.	C6 (osc.)* C3 (ant.)
4	Follow "Adjustments for Electric Tuning."			

* Use minimum capacity peak if two peaks can be obtained.

The oscillator section of the gang condenser has two trimmers, one on top, accessible through a hole in the chassis, and the other on bottom. It may be necessary to adjust both of these trimmers to secure a peak on 1,500 kc.

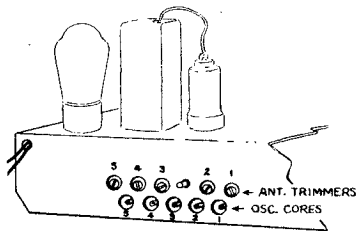

Push-Button Adjustments

No. 1—Approximately 550-980 kc.
Nos. 2, 3—Approximately 650-1,080 kc.
Nos. 4, 5—Approximately 850-1,500 kc.

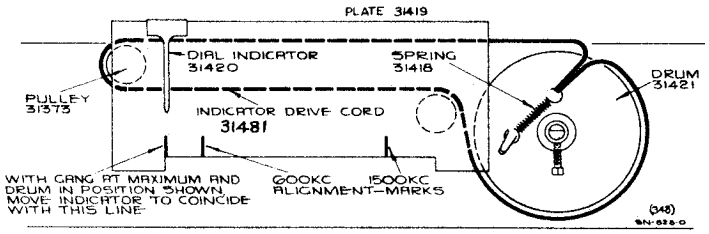

Dial-Indicator and Drive Mechanism

Refer to "Alignment Procedure" for explanation of the "calibration marks" shown in this drawing

Adjustments for Electric Tuning

These models have six push buttons. The right-hand button connects the gang condenser for dial tuning. The other five buttons are for electric tuning of five different stations in the standard-broadcast range. The station buttons connect to separate magnetite-core oscillator coils and separate antenna trimmers which must be adjusted for the desired stations. Use an insulated screwdriver or alignment tool such as RCA Stock No. 31031. Allow at least five minutes warm-up period before making adjustments. Use a regular antenna for the preliminary adjustments.

The procedure is as follows:

1. Make a list of the five desired stations, arranged in order from low to high frequencies.
2. Push in the dial-tuning (right-hand) button, and manually tune in the first station on the list.
3. Push in station-button No. 1 (left-hand) and adjust No. 1 oscillator core (L12) to receive this station. Screw the core all the way in, to lowest frequency, and then unscrew slowly until the station is received.
4. Adjust No. 1 antenna trimmer (C20) for maximum output on this station.
5. Adjust for each of the remaining four stations in the same manner.

(Clockwise adjustment of oscillator cores and antenna trimmers tunes the circuits to lower frequencies.)

6. Make a final careful adjustment of the oscillator cores and antenna trimmers, using one or two feet of wire as an antenna to ensure sharp peaking.

©John F. Rider, Publisher

RCA MFG. CO., INC.

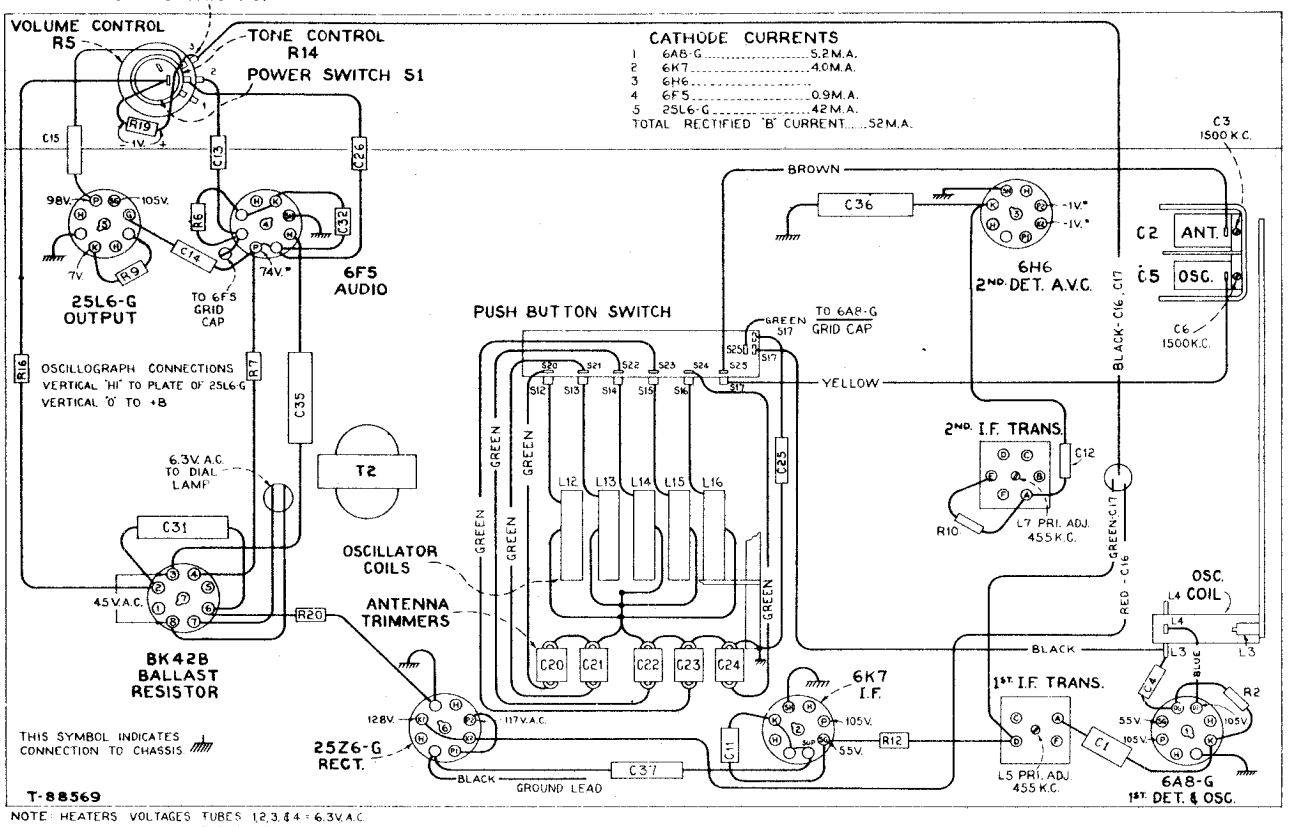

NOTE: HEATERS VOLTAGES TUBES 1,2,3,&4 = 6.3V.A.C.
TUBES 5&6 = 25V.A.C.

R-F Wiring Diagram and Socket Voltages

STOCK No.	DESCRIPTION	Unit List Price
31483	Ballast—Ballast resistor tube type BK42-B (R17, R18)	.80
14338	Bushing—Variable tuning condenser mounting bushing and hardware	.08
31416	Capacitor—Antenna coil trimmer capacitor bank (C20, C21, C22, C23, C24)	1.20
12723	Capacitor—56 mmfd. (C4)	.35
30904	Capacitor—100 mmfd. (C7, C8, C9, C10)	.25
13003	Capacitor—180 mmfd. (C12)	.35
12488	Capacitor—270 mmfd. (C32)	.35
31435	Capacitor—750 mmfd. (C25)	.40
4838	Capacitor—.005 mfd. (C26)	.25
4870	Capacitor—.025 mfd. (C15)	.20
14393	Capacitor—.01 mfd. (C13, C14, C33)	.30
4886	Capacitor—.05 mfd. (C37)	.20
30882	Capacitor—.05 mfd. (C11)	.20
4839	Capacitor—0.1 mfd. (C1, C31, C35)	.30
12484	Capacitor—0.25 mfd. (C36)	.30
31479	Capacitor—Comprising two sections of 16 mfd. each (C16, C17)	1.55
30894	Coil—Antenna coil (L1, L2)	.85
31098	Coil—Oscillator coil (L3, L4)	.85
31383	Coil—Push button oscillator coil (L15, L16)	.30
31384	Coil—Push button oscillator coil (L13, L14)	.30
31385	Coil—Push button oscillator coil (L12)	.30
31422	Condenser—2-gang variable tuning condenser (C2, C3, C5, C6, C28)	2.70
31413	Control—Volume control, tone control and on-off switch (R5, R14, S1)	3.00
31481	Cord—Drive cord—36-in. long silk cord	.20
30905	Core—Adjustable core and stud assembly for i.f. transformer	.35
31386	Core—Adjustable core and stud for oscillator coils	.15
31421	Drum—Indicator drive drum and hub	.45
31420	Indicator—Station selector indicator pointer	.10
31480	Lamp—Dial lamp	.20
31419	Plate—Colored dial plate comprising plate, spacers and screws	.12
31373	Pulley—Indicator drive cord pulley	.08
31483	Resistor—Ballast resistor tube type BK42-B (R17, R18)	.80
14525	Resistor—22 ohms, ½ watt (R19)	.20
30880	Resistor—150 ohms, ½ watt (R9)	.20
13045	Resistor—18,000 ohms, ½ watt (R12)	.20
12738	Resistor—27,000 ohms, ½ watt (R10)	.20
12286	Resistor—56,000 ohms, ½ watt (R2)	.20
12199	Resistor—270,000 ohms, ½ watt (R7, R20)	.20
12285	Resistor—470,000 ohms, ½ watt (R16)	.20
12679	Resistor—2.2 megohm, ¼ watt (R4)	.20
13601	Resistor—10 megohm, ½ watt (R6)	.20
14887	Retainer—Indicator drive cord pulley retainer	.01
31482	Screw—No. 8 square head set screw for drum Stock No. 31421	.03
31365	Socket—Dial lamp socket	.30
31251	Socket—Tube socket	.25
31418	Spring—Indicator drive cord tension spring	.05
31414	Switch—Selector switch (S12, S13, S14, S15, S16, S17, S20, S21, S22, S23, S24, S25)	3.05
30957	Transformer—1st i.f. transformer (L5, L6, C7, C8)	1.90
30903	Transformer—2nd i.f. transformer (L7, L8, C9, C10)	1.80
31484	Transformer—Output transformer (T2)	1.30
31483	Tube—Ballast resistor tube type BK42-B (R17, R18)	.80
	SPEAKER ASSEMBLIES (Speaker No. 84326-3)	
31486	Cone—Speaker cone and voice coil (L9)	1.35
31485	Speaker—Speaker complete	4.35
	MISCELLANEOUS ASSEMBLIES	
31428	Button—Station selector push button	.06
31487	Clip—Spring clip and washers to hold dial scale	.12
31429	Dial—Station selector dial scale	.40
31095	Disc—10 protector discs for call letter markers	.10
31355	Knob—Station selector knob	.12
30773	Knob—Tone control or dummy knob	.15
31391	Knob—Volume control knob	.15
30991	Marker—Station call letter push button markers	.40
31488	Mounting—Chassis mounting screw and washer	.15
14270	Spring—Retaining spring for knob Stock No. 30773 and 31355	.05
30330	Spring—Retaining spring for knob Stock No. 31391	.03

ALL PRICES ARE SUBJECT TO CHANGE OR WITHDRAWAL WITHOUT NOTICE.

©John F. Rider, Publisher

MODEL 95X, 95XL
Schematic, Socket Voltage, Alignment

RCA MFG. CO., INC.

Chassis Wiring, Parts Lead Dress

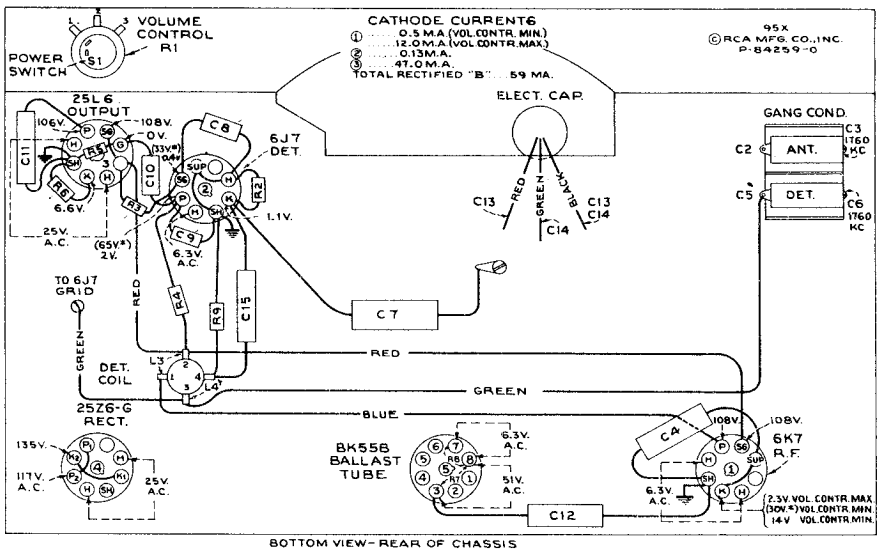

Power Output (125-volt, 60-cycle supply)

Undistorted	1.0 watt
Maximum	1.5 watts

Loudspeaker

Type ..... 5-inch Electrodynamic
Voice-Coil Impedance ... 3 ohms at 400 cycles

Figure 3—Radiotron Socket Voltages, and Location of Parts

* Note: Values with (*) are operating voltages.

Values not starred are actual measured voltages.

Measurements made to chassis unless otherwise indicated.

Measurements made with set tuned to quiet point, volume control at minimum, using 1,000-ohm-per-volt meter, having ranges of 10, 50, and 250 volts. (Use nearest range above the specified measured voltage.)

Values should hold within approximately ± 20% for 117-volt 60-cycle a-c supply. On d-c, voltages are approximately 10% lower, except heaters, which remain the same.

Volume control and power switch—Model 95X only (R1, S1)	1.50	
Volume control and power switch—Model 95XL only (R1, S1)	1.50	

Alignment Procedure

CAUTION: The chassis is connected to one side of the power supply. Avoid contact of chassis or parts to external ground when servicing.

Reel up the antenna wire, and connect the high side of test-oscillator through an 80 mmfd. capacitor to the antenna terminal on the antenna transformer. Connect low side of oscillator to receiver chassis through a 0.1 mfd. capacitor. Turn gang condenser to minimum (full out), tune oscillator to 1,760 kc, connect an output meter across the voice coil, and turn volume control to maximum.

Keep antenna roll and lead clear of chassis during alignment.

Adjust the two trimmers (C3 and C6) on side of gang condenser for maximum output, using lowest possible output from test-oscillator.

Turn pointer, while holding tuning knob, so that the pointer is horizontal and pointing to low-frequency end when the gang condenser is at maximum. Check pointer adjustment on a station.

Precautionary Lead Dress

1. Dress power cord away from detector coil, heater leads close to base, leads from electrolytic close to base and free of grid leads.
2. Dress lead from det. coil to gang condenser toward back apron. Dress lead from antenna coil to volume control toward front apron.

25-Cycle Operation

For 25-cycle operation, connect a 16 mfd., 150-volt dry electrolytic capacitor (Stock No. 31323) from the cathode of the rectifier tube to chassis. (Positive to contact K1 of 25Z6-G, and negative to shell contact of 6K7 r-f socket.)

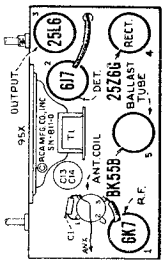

Figure 1—Radiotron Locations

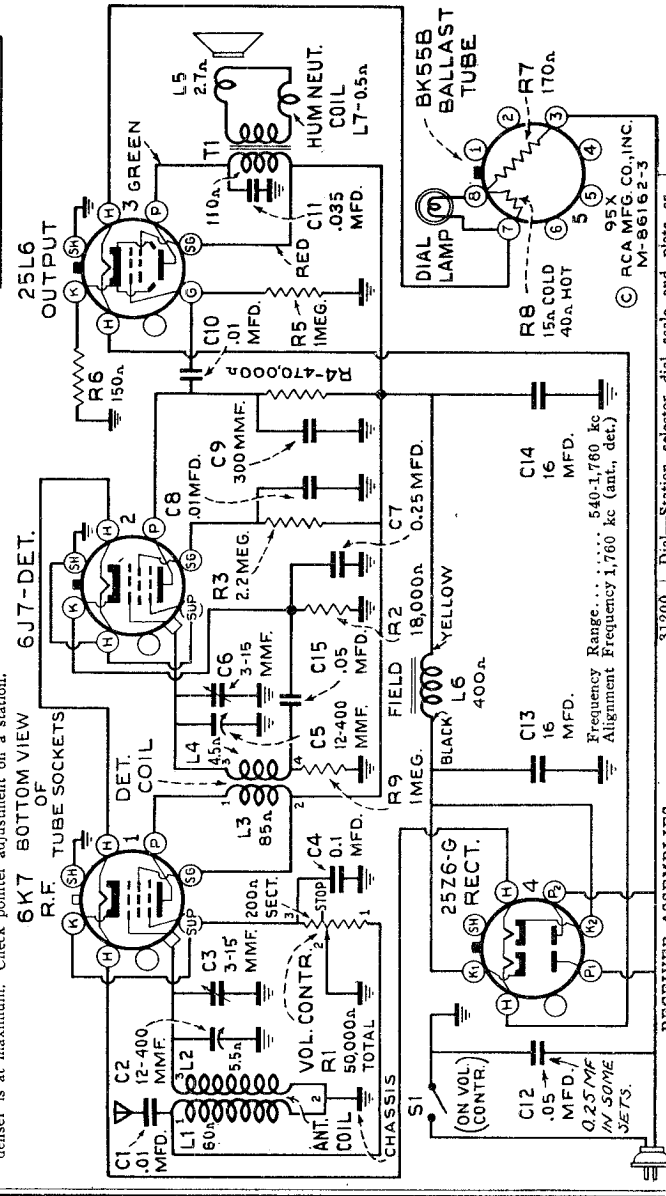

	RECEIVER ASSEMBLIES			
31198	Ballast—Ballast resistor tube type BK55B (R7, R8)	31200	Dial—Station selector dial scale and plate assembly	.40
30883	Capacitor—300 mmf. (C9)	31196	Indicator—Station selector indicator pointer	.25
14393	Capacitor—.01 mfd. (C1, C8, C10)	4340	Lamp—Dial lamp	.17
5196	Capacitor—.035 mfd. (C11)	31193	Lead—Antenna lead—approximately 25 ft. long	.50
30882	Capacitor—.05 mfd. (C15)	31198	Resistor—Ballast resistor tube type BK55B (R7, R8)	.80
30899	Capacitor—0.1 mfd. (C4)	30880	Resistor—150 ohms, ½ watt (R6)	.20
30965	Capacitor—0.25 mfd. (C7)	13045	Resistor—18,000 ohms, ½ watt (R2)	.20
12484	Capacitor—0.25 mfd. (C12)	12285	Resistor—470,000 ohms, ½ watt (R4)	.20
30873	Capacitor—Comprising two 16 mfd. sections (C13, C14)	13730	Resistor—1 meg., ½ watt (R5, R9)	.20
		12679	Resistor—2.2 meg., ½ watt (R3)	.20
30875	Coil—Antenna coil (L1, L2)	31197	Shaft—Indicator pointer shaft and pulley	.10
30876	Coil—Det. coil (L3, L4)	31199	Shield—Dial lamp shield	.04
31195	Condenser—2-gang variable tuning condenser—Model 95X only (C2, C3, C5, C6)	14171	Socket—Dial lamp socket	.40
		11196	Socket—Radiotron and ballast resistor socket	.25
		30631	Spring—Indicator drive cord tension spring	.03
31191	Condenser—2-gang variable tuning condenser—Model 95XL only (C2, C3, C5, C6)	31198	Tube—Ballast resistor tube type BK55B (R7, R8)	.80
30877	Cord—Indicator drive cord			

©John F. Rider, Publisher

RCA MFG. CO., INC.

MODEL 97Y, Chassis RC352A
MODELS 98X, 98EY, 98YG
Chassis RC352
Schematic, Lead Dress

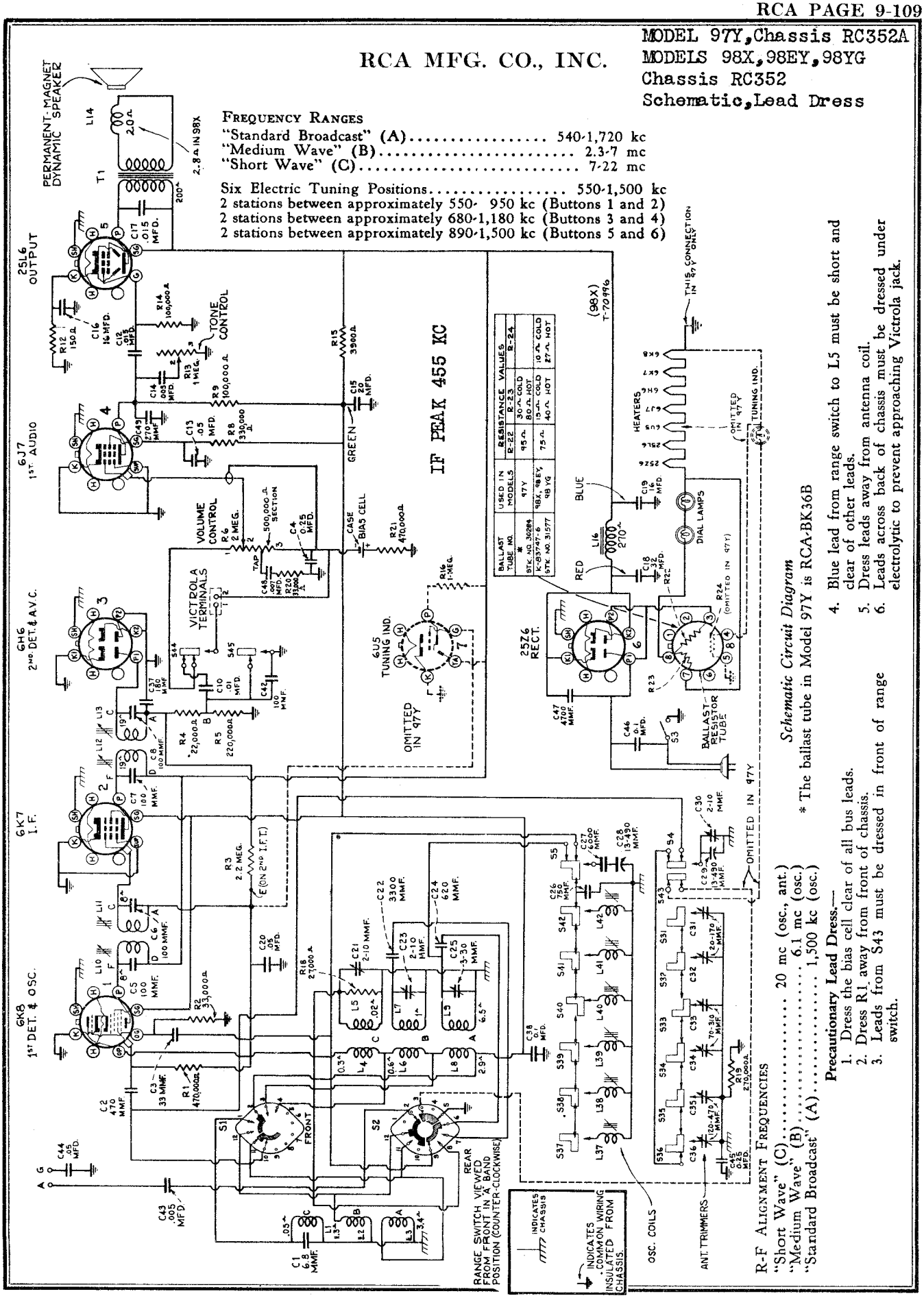

Schematic Circuit Diagram

* The ballast tube in Model 97Y is RCA-BK36B

Precautionary Lead Dress.—

1. Dress the bias cell clear of all bus leads.
2. Dress R1 away from front of chassis.
3. Leads from S43 must be dressed in front of range switch.
4. Blue lead from range switch to L5 must be short and clear of other leads.
5. Dress leads away from antenna coil.
6. Leads across back of chassis must be dressed under electrolytic to prevent approaching Victrola jack.

R-F ALIGNMENT FREQUENCIES

"Short Wave" (C) ..... 20 mc (osc., ant.)
"Medium Wave" (B) ..... 6.1 mc (osc.)
"Standard Broadcast" (A) ..... 1,500 kc (osc.)

©John F. Rider, Publisher

MODEL 97Y
MODELS 98X, 98EY, 98YG
Voltage, Chassis Wiring

RCA MFG. CO., INC.

Drive Cord Data, Notes
Specifications

Pilot Lamps (2 on Model 97Y) (3 on Models 98X, 98EY, 98YG)..... Mazda 47, 6.3 volts, .15 amp.

Power Output		Power Supply Rating	
Undistorted	1.5 watts	A-C Rating	105-125 volts, 25-60 cycles, 55 watts
Maximum	2.5 watts	D-C Rating	105-125 volts, 55 watts

Loudspeaker (Permanent-Magnet Dynamic)	97Y	98X	98EY	98YG
Diameter	12 inches	6 inches	8 inches	12 inches
V. C. Impedance at 400 cycles	2.2 ohms	3 ohms	2.2 ohms	2.2 ohms

Miscellaneous Service Notes

Bias Cell.— The bias cell provides approximately 1-volt bias for the 1st audio grid. **The cell should never be shorted, not measured with an ordinary voltmeter or other device that draws current.** The cell may be checked by measuring the 1st-audio cathode current with a new tested 6J7 tube in this socket. The current should be approximately ½ milliampere. If it is appreciably greater than ½ mil., install a new bias cell.

Victrola Attachment.— Two screw type terminals, numbered 1 and 2, are provided on the rear apron of the chassis for connection to a Victrola Attachment, such as the R-93, R-93-B, etc. *(When A-C supply is available.)*

Care must be taken that these terminals are never connected in any way to the chassis, otherwise injury will result to the bias cell. To safeguard against this possibility, the following precautions should be observed in connecting the Victrola Attachment to the receiver.

Victrola Attachment with shielded cable.— If the shielded cable has a plug connector, remove the plug, connect the shielding to terminal 1, and connect the lead (inside the shielding) to terminal 2. Tape the shielding for a sufficient distance to prevent the possibility of it shorting against the chassis.

Victrola Attachment with twisted-pair cable.—Connect the low-side of the Attachment to terminal No. 1, and the high-side of the Attachment to terminal No. 2. (In some Attachments, the lead from the low-side is black, and the lead from the high-side is black-brown.)

Power-Supply Polarity.—For operation on d-c, the power plug must be inserted in the outlet for correct polarity. If the set does not function, reverse the position of the plug. For operation on a-c, a similar reversal of the plug may reduce hum.

Loudspeaker.—To center the loudspeaker voice coil, first remove the front dust cover by applying acetone sparingly, then loosen the spider screws, insert three narrow feelers at equal distances in the gap, and tighten the spider screws. Remove the feelers, and fasten a dust cover in place with loudspeaker cement.

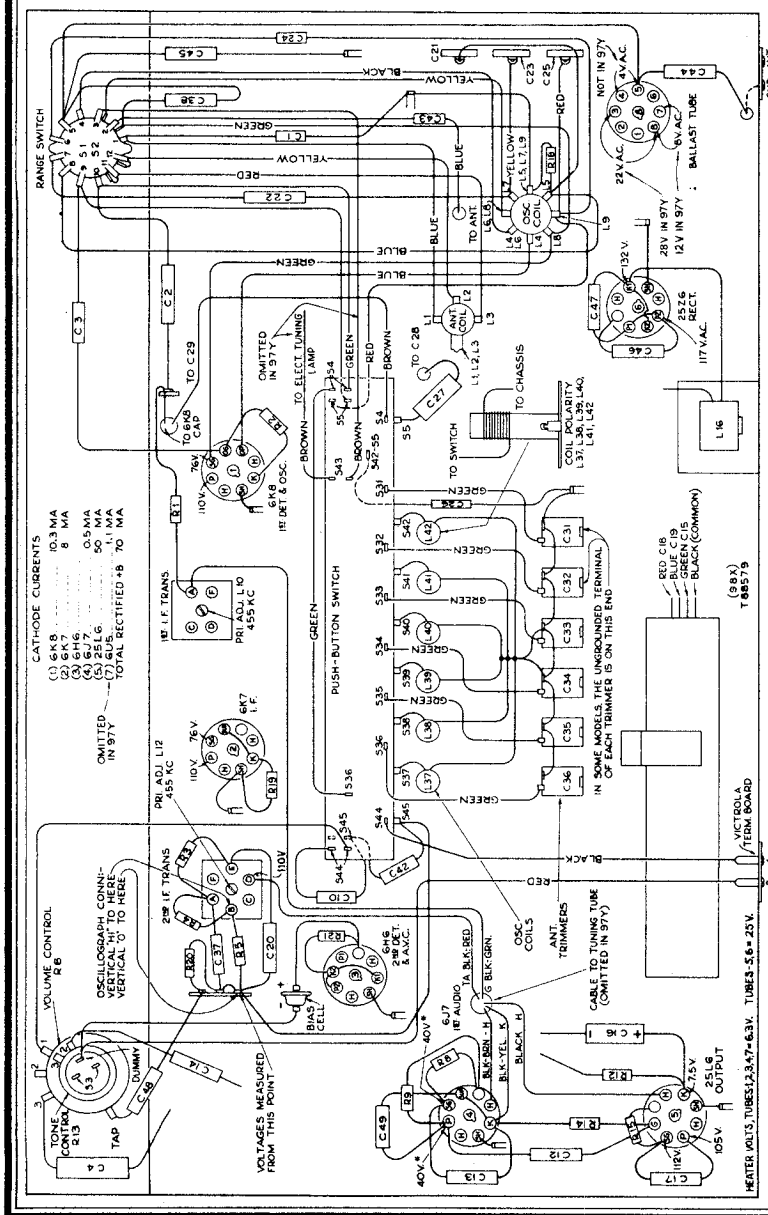

R-F Wiring Diagram and Socket Voltages

Measurements made to low-side of tone control unless otherwise indicated, with set tuned to quiet point and volume control at minimum. Values should hold within approximately ±20% with 117-volt a-c supply. On d-c, voltages are approximately 10% lower, except heaters, which remain the same.

***NOTE:** Values with star (*) are operating voltages in circuits with high series-resistance. The actual measured voltages will be lower, depending on the voltmeter loading.

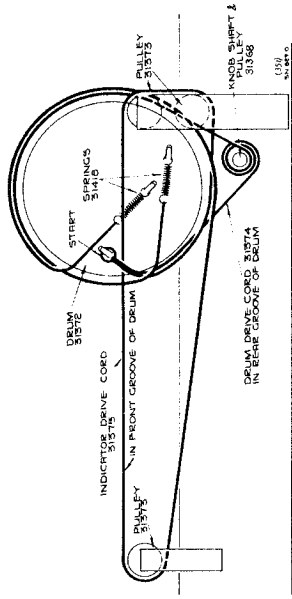

DRUM SHOWN WITH GANG AT MAXIMUM CAPACITY

At Right.—Arrangement of Drive Cords for Tuning Condenser and Dial Indicator

RCA Tube Complement

(1) RCA-6K8	First-Detector—Oscillator	(6) RCA-25Z6	Half-Wave Rectifier
(2) RCA-6K7	Intermediate-Frequency Amplifier	RCA-6U5 (Models 98X, 98EY, 98YG)	Tuning Tube
(3) RCA-6H6	Second-Detector and A.V.C.	RCA Stock No. 31577 (Models 98X, 98EY, 98YG)	Ballast Tube
(4) RCA-6J7	Audio Voltage Amplifier		
(5) RCA-25L6	Audio Power Amplifier	RCA-BK36B (Model 97Y)	Ballast Tube

©John F. Rider, Publisher

©John F. Rider, Publisher

ALIGNMENT PROCEDURE

Cathode-Ray Alignment is the preferable method. Connections for the oscillograph are shown in the chassis drawing.

Output Meter Alignment.—If this method is used, connect the meter across the voice coil, and turn the receiver volume control to maximum.

Test-Oscillator.—For all alignment operations, connect the low side of the test-oscillator to the receiver ground terminal (G), and keep the output as low as possible to avoid a-v-c action.

Calibration Scale on Indicator-Drive-Cord drum. — The tuning dial if fastened in the cabinet and cannot be used for reference during alignment; therefore, a calibration scale is attached to the rear of the drum which is mounted on the front shaft of the gang condenser. The setting of the gang condenser is read on this scale, which is calibrated in degrees. The correct setting of the gang in degrees, for each alignment frequency, is given in the alignment table.

As the first step in r-f alignment, check the position of the drum. The 180° mark on the drum scale must be vertical, and directly over the center of the gang-condenser shaft when the plates are fully meshed. The distance from the front of the chassis to the drum must not exceed ⅜-inch. The drum is held to the shaft by means of two set screws, which must be tightened securely when the drum is in the correct position.

Pointer for Calibration Scale.—Improvise a pointer for the calibration scale by fastening a piece of wire to the gang-condenser frame, and bend the wire so that it points to the "180°" mark on the calibration scale when the plates are fully meshed.

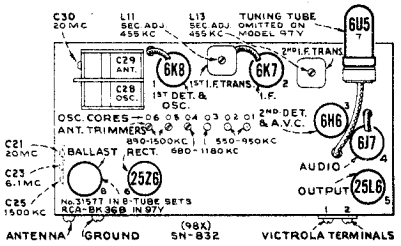

Tube and Trimmer Locations

Dial-Indicator Adjustment.—After fastening the chassis in the cabinet, attach the dial indicator to the drive cable with indicator at the 530 kc mark, and gang condenser fully meshed. The indicator has a spring clip for attachment to the cable.

After completion of alignment, seal the i-f core-adjusting screws with household cement.

For additional details, refer to booklet "RCA Victor Receiver Alignment."

Steps	Connect the high side of test-osc. to—	Tune test-osc. to—	Turn radio dial to—	Adjust the following for max. peak output
1	6K7 I-F grid cap, in series with .01 mfd.	455 kc	"A" band, Quiet Point between 550-750 kc	L12 and L13 (2nd I-F Trans.)
2	6K8 det. grid cap, in series with .01 mfd.	455 kc		L10 and L11 (1st I-F Trans.)
3	Antenna Terminal, in series with 400 ohms	20 mc	20 mc (23°) "C" band	C21* (osc.) C30** (ant.)
4	Antenna Terminal, in series with 400 ohms	6.1 mc	6.1 mc (31°) "B" band	C23 (osc.)†
5	Antenna Terminal, in series with 200 mmf.	1,500 kc	1,500 kc (28½°) "A" band	C25 (osc.)
6	Follow "Adjustments for Electric Tuning"			

* Use **minimum** capacity peak if two peaks can be obtained.

** Rock gang slightly and use **maximum** capacity peak if two peaks can be obtained with C30. Check to determine that C21 has been adjusted to the correct peak by tuning to approximately 28° (19.09 mc), where a weaker signal should be received.

† Use **minimum** capacity peak if two peaks can be obtained. Check to determine that C23 has been adjusted to the correct peak by turning to approximately 49° (5.19 mc), at which point a weaker signal should be received.

Note: Oscillator tracks 455 kc above signal on all bands.

ADJUSTMENTS FOR ELECTRIC TUNING

These models have eight push buttons. The left-hand button is a Victrola switch. The right-hand button connects the gang condenser for manual tuning. The other six buttons are for electric tuning of six different stations in the standard-broadcast range. The station buttons connect to separate magnetite-core oscillator coils and separate antenna trimmers which must be adjusted for the desired stations. Use an insulated screwdriver or alignment tool such as RCA Stock No. 31031. Allow at least five minutes warm-up period before making adjustments.

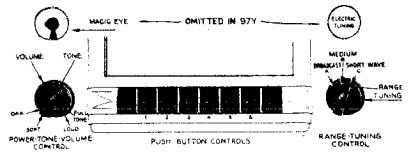

Location of Controls

The left-hand push-button is a Victrola-Attachment switch. The right-hand push-button is for dial tuning.

The procedure is as follows:

1. Make a list of the desired six stations, arranged in order from low to high frequencies.
2. Push in the dial-tuning button, and manually tune in the first station on the list.
3. Push in station button No. 1 (second from left) and adjust No. 1 oscillator core (L37) to receive this station. Screw the core all the way in, to lowest frequency, and then unscrew slowly until station is received.
4. Adjust No. 1 antenna trimmer (C36) for maximum output on this station.

Clockwise adjustment of cores and trimmers tunes the circuits to lower frequencies.

5. Adjust for each of the remaining five stations in the same manner.
6. Make a final careful adjustment of the oscillator cores and antenna trimmers. Use the "Magic Eye" in Models 98X, 98EY, 98YG to ensure sharp peaking. With Model 97Y use one or two feet of wire as an antenna when making the final adjustments in order to obtain sharp peaking.

MODELS 97Y, 98X, 98EY, 98YG

Chassis No. RC-352A RC-352 RC-352 RC-352

REPLACEMENT PARTS

Insist on genuine factory-tested parts, which are readily identified and may be purchased from authorized dealers.

STOCK No.	DESCRIPTION	Unit List Price
	RECEIVER ASSEMBLIES	
31577	Ballast—Ballast resistor tube (R22, R23, R24) Models 98X, 98EY and 98YG	.80
30284	Ballast—Ballast resistor tube (R22, R23) Model 97Y	.80
31767	Board—Antenna-ground terminal board	.20
31579	Board—Phonograph terminal board	.20
30752	Bracket—Bracket for holding Magic Eye tube —Models 98X, 98EY and 98YG	.25
14338	Bushing—Variable condenser mounting bushing and screws	.08
31400	Capacitor—Adjustable trimmer capacitor, two sections 2-10 mmfd. and one section 3-30 mmfd. (C21, C23, C25)	.50
14079	Capacitor—6.8 mmfd. (C1)	.35
31387	Capacitor—Antenna coil trimmer capacitor bank —20-470 mmfd. (C31, C32, C33, C34, C35, C36)	1.30
12948	Capacitor—33 mmfd. (C3)	.35
12720	Capacitor—100 mmfd. (C42)	.35
13003	Capacitor—180 mmfd. (C37)	.35
12488	Capacitor—270 mmfd. (C49)	.35
30433	Capacitor—470 mmfd. (C2)	.35
31381	Capacitor—620 mmfd. (C24)	.45
31435	Capacitor—750 mmfd. (C26)	.40
4881	Capacitor—3300 mmfd. (C22)	.60
12897	Capacitor—4700 mmfd. (C47)	.65
31405	Capacitor—6000 mmfd. (C27)	.75
5148	Capacitor—.007 mfd. (C48)	.20
4838	Capacitor—.005 mfd. (C14, C43)	.25
14393	Capacitor—.01 mfd. (C10)	.30
11315	Capacitor—.015 mfd. (C12, C17)	.20
4886	Capacitor—.05 mfd. (C13, C20, C44)	.20
4839	Capacitor—0.1 mfd. (C38, C46)	.30
12484	Capacitor—0.25 mfd. (C4, C45)	.30
31323	Capacitor—16 mfd. (C16)	.65
31576	Capacitor—Comprising one 32 mfd., one 20 mfd., and one 16 mfd. section (C15, C18, C19)	2.15
30904	Capacitor—100 mfd. (C5, C6, C7, C8)	.25
31581	Cell—Bias cell	.25
31382	Clip—Mounting clip for coils and cores on oscillator bank	.04
31402	Coil—Antenna coil (L1, L2, L3)	1.15
31401	Coil—Oscillator coil (L4, L5, L6, L7, L8, L9, C24)	2.00
31385	Coil—Push button oscillator coil (L37, L38)	.30
31384	Coil—Push button oscillator coil (L39, L40)	.30
31383	Coil—Push button oscillator coil (L41, L42)	.30
31369	Condenser—2-gang variable tuning condenser (C28, C29, C30)	2.65
5119	Connector—3-contact female connector plug for reproducer cable	.25
31366	Control—Volume control, tone control, and on-off switch (R6, R13, S3)	3.00
31374	Cord—Indicator pointer drive cord	.15
31375	Cord—Indicator pointer drive cord	.30
30905	Core—Adjustable core and stud	.35
31386	Core—Adjustable core and stud assembly for oscillator bank	.15
31372	Drum—Variable condenser drive cord drum and calibrator	.65
31580	Holder—Bias cell holder	.15
31480	Lamp—Dial lamp	.20
31373	Pulley—Drive cord pulley	.08
5066	Reactor (L16)	2.45
31577	Resistor—Ballast resistor (R22, R23, R24) —Models 98X, 98EY and 98YG	.80
30284	Resistor—Ballast resistor (R22, R23)—Model 97Y	.80
30880	Resistor—150 ohms, ½ watt (R12)	.20
30694	Resistor—3,900 ohms, ½ watt (R15)	.20
14284	Resistor—22,000 ohms, 1/10 watt (R4)	.15
12738	Resistor—27,000 ohms, ½ watt (R18)	.20
12454	Resistor—33,000 ohms, ½ watt (R2, R20)	.20
14560	Resistor—100,000 ohms, ½ watt (R9, R14)	.20
12264	Resistor—220,000 ohms, ½ watt (R5)	.20
12199	Resistor—270,000 ohms, ½ watt (R19)	.20
14983	Resistor—330,000 ohms, ½ watt (R8)	.20
12265	Resistor—470,000 ohms, ½ watt (R1, R21)	.20
12013	Resistor—1 meg. 1/10 watt (R16) Models 98X, 98EY and 98YG	.15
12679	Resistor—2.2 meg. ½ watt (R3)	.20
14343	Retainer—Drive cord pulley retainer	.03
14887	Retainer—Retainer for drive cord pulley	.01
4669	Screw—No. 8-32 square head set screw for drum Stock No. 31372	.03
31368	Shaft—Station selector knob shaft and pulley	.30
31199	Shield—Dial lamp shield	.04
12110	Shield—Radiotron shield cap	.14
31365	Socket—Dial lamp socket	.30
13871	Socket—Magic Eye socket—Models 98X, 98EY and 98YG	.45
31251	Socket—Tube socket	.25
31313	Spring—Tension spring for station selector push button switch latch bar	.06
31418	Spring—Indicator or drum drive cord tension spring	.05
31370	Switch—Push button selector switch (S4, S5, S31, S32, S33, S34, S35, S36, S37, S38, S39, S40, S41, S42, S43, S44, S45)	3.85
31398	Switch—Range switch (S1, S2)	1.25
30957	Transformer—First i-f transformer (L10, L11, C5, C6)	1.90
30903	Transformer—Second i-f transformer (L12, L13, C7, C8)	1.80
31577	Tube—Ballast resistor tube (R22, R23, R24)— Models 98X, 98EY and 98YG	.80
30284	Tube — Ballast resistor tube (R22, R23)— Model 97Y	.80
	SPEAKER ASSEMBLIES Model 98X (84307-1)	
31665	Cone—Speaker cone and voice coil (L14)	3.20
5118	Plug—3 contact male plug for speaker	.25
31664	Speaker complete	6.30
31666	Transformer—Output transformer (T1)	1.20
	SPEAKER ASSEMBLIES Models 97Y and 98YG (Speaker RL 71 A-1)	
31275	Cone—Speaker cone and voice coil (L14)	1.75
5118	Plug—3 Contact male plug for speaker	.25
31798	Speaker—Less output transformer	17.10
14628	Transformer—Output transformer (T1)	2.10
	SPEAKER ASSEMBLIES Model 98EY (Speaker RL 73-5)	
31310	Cone—Speaker cone and voice coil (L14)	1.75
5118	Plug—3 Contact male plug for speaker	.25
31997	Speaker Complete	11.25
14628	Transformer—Output transformer (T1)	2.10
	MISCELLANEOUS ASSEMBLIES	
12038	Band—Rubber band shield for Magic Eye— Models 98X, 98EY and 98YG	.02
31397	Button—Station selector push button	.15
31456	Cover — 8-protective covers for push button markers	.08
31394	Clip—Pointer travel stop clip	.08
31406	Dial—Station selector dial scale	.90
31643	Disc—Electric Tuning indicator disc — Models 98X, 98EY and 98YG	.25
31407	Escutcheon—Magic Eye or Electric Tuning indicator escutcheon—Models 98X, 98EY and 98YG	.60
31395	Escutcheon—Station selector escutcheon less dial scale and push buttons	1.15
31392	Indicator—Station selector indicator pointer	.30
31355	Knob—Range switch knob	.12
14359	Knob—Station selector knob	.20
31391	Knob—Tone control knob	.15
30773	Knob—Volume control knob	.15
31458	Marker—"Dial Tuning" push button marker	.01
31457	Marker—"Record Player" push button marker	.01
31589	Marker—Station call letters push button markers	.35
31393	Screen—Color screen for dial frame	.40
4982	Spring—Retaining spring for knob Stock No. 14359	.05
30330	Spring—Retaining spring for knob Stock No. 31391	.03
14270	Spring—Retaining spring for knob Stock Nos. 30773 and 31355	.05

ALL PRICES ARE SUBJECT TO CHANGE OR WITHDRAWAL WITHOUT NOTICE.

MODEL 95X1
Schematic, Socket Voltage, Alignment Chassis Wiring, Specs. Lead Dress, Tuner

RCA MFG. CO., INC.

Removing chassis from cabinet.—Remove back plate and control knobs. Pull the push-button knobs off their shafts. Remove the four chassis screws (bottom of cabinet). Lift the chassis and slide it out at an angle to clear the shaft holes in the top of cabinet.

Removing trimmer-and-switch assembly.—For convenient access to the sockets and parts, it is advisable to remove the trimmer-and-switch assembly. This is a simple operation, accomplished as follows: Unsolder the four leads that connect to the assembly, remove the two nuts that hold the assembly to the chassis, and lift out the assembly. In re-assembling, dress the leads to prevent rubbing against the push-button shafts.

CAUTION: The chassis is connected to one side of the power supply. Avoid contact of chassis or parts to external ground when servicing.

Alignment Procedure

Remove chassis from cabinet.

Reel up the antenna wire, and connect the high side of test-oscillator through an 80-mmfd. capacitor to the antenna terminal on the antenna transformer. Connect low side of oscillator to receiver chassis through an .01-mfd. capacitor. Turn gang condenser to minimum (full out), push in the manual-tuning (right-hand) button, tune oscillator to 1,560 kc, connect an output meter across the voice coil, and turn volume control to maximum.

Keep antenna roll and lead clear of chassis during all adjustments.

Adjust the two trimmers (C3 and C6) on side of gang condenser for maximum output, using lowest possible output from test-oscillator.

Turn pointer, so that it is horizontal and pointing to low-frequency end when the gang condenser is at maximum. Check pointer adjustment on a station.

POWER OUTPUT (125-volt, 60-cycle supply)
Undistorted ..... 1.0 watt
Maximum ..... 1.5 watts

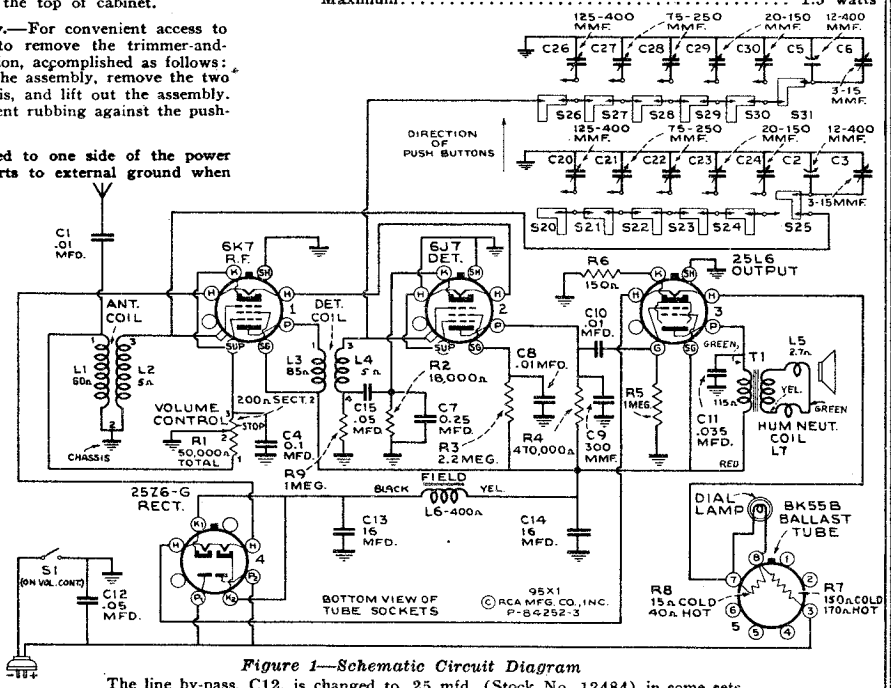

Figure 1—Schematic Circuit Diagram

The line by-pass, C12, is changed to .25 mfd. (Stock No. 12484) in some sets.

Adjustment of Tuning Capacitors

The preferable and quickest method of adjusting the tuning capacitors for five different stations, is to employ a test-oscillator, as described below:

1. Make a list of the desired five stations, arranged in order from low to high frequencies.
2. Determine the correct settings of the test-oscillator for these five frequencies. This is accomplished as follows: Tune in each of the five stations on any standard receiver; zero-beat the test-oscillator against each station, and note the exact setting of the oscillator in each case.
3. Reel up the antenna wire. Connect the high side of test-oscillator through an 80-mmfd. fixed capacitor to the end of the antenna wire. Clip the low side of the oscillator through a 0.1-mfd. capacitor to one of the chassis-mounting screws on the bottom of the cabinet. Tune the oscillator to the previously-determined point for the lowest-frequency station, and adjust for a strong output.
4. Turn the volume control of the push-button receiver full clockwise, and push in the left-hand end button. Using an insulated screwdriver, peak capacitors C20 and C26, at the same time reducing the output of the oscillator in order to secure a sharp peak. **(Clockwise adjustment of the capacitors tunes the circuits to lower frequencies, and counter-clockwise adjustment tunes the circuits to higher frequencies. The range of each trimmer is three full counter-clockwise turns from the tight position. Do not unscrew more than three turns.)**
5. Push in the second button from left, and adjust C21 and C27 for peak output with the oscillator tuned to the frequency of the second station.
6. Proceed in this manner to adjust each pair of capacitors for the desired frequencies.
7. Final adjustment may be made in actual reception of the stations.

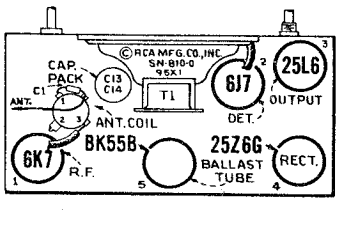

Figure 2—Radiotron Location

*Note: Values with star (*) are operating voltages. Values not starred are actual measured voltages.

Measurements made to chassis unless otherwise indicated.

Measurements made with manual-tuning button (right-hand) pushed in, and set tuned to a quiet point, volume control at minimum, using 1,000-ohm-per-volt meter, having ranges of 10, 50, and 250 volts. (Use nearest range above the specified measured voltage.)

Values should hold within ± 20% for 117-volt 60-cycle a-c supply. On d-c, voltages are approximately 10% lower, except heaters, which remain the same.

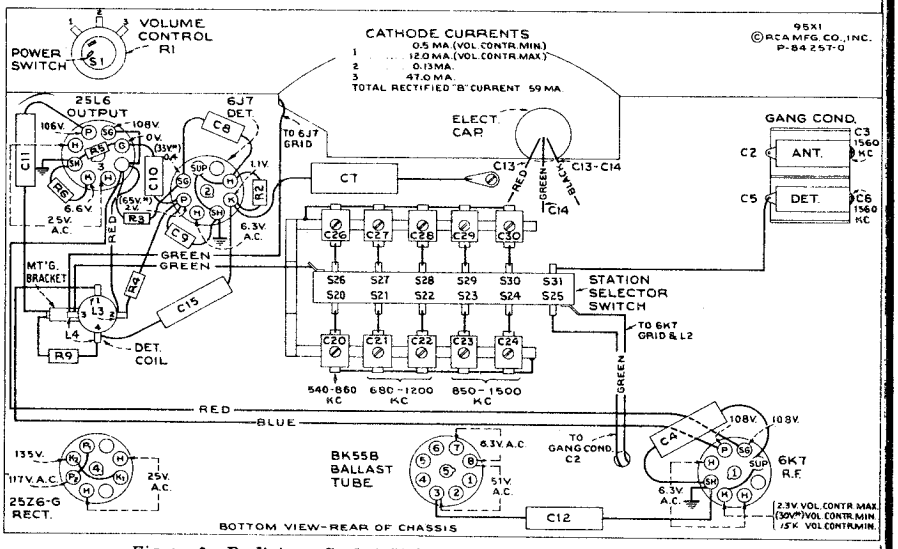

Figure 3—Radiotron Socket Voltages, and Location of Parts

Precautionary Lead Dress

1. Dress Power cord away from detector coil, heater leads close to base, leads from electrolytic close to base and free of grid leads.
2. Dress blue lead from r-f plate to detector coil along front edge of push-button shaft holes. Dress all leads to prevent rubbing against push button shafts.

25-Cycle Operation

For 25-cycle operation, connect a 16 mfd., 150-volt dry electrolytic capacitor (Stock No. 31323) from the cathode of the rectifier tube to chassis. (Positive to contact K1 of 25Z6-G, and negative to shell contact of 6K7 r-f socket.)

Frequency Range ..... 540-1,560 kc
Alignment Frequency ..... 1,560 kc (ant., det.)
One station between approximately 540-860 kc
Two stations between approximately 680-1,200 kc
Two stations between approximately 850-1,500 kc

Loudspeaker
Type ..... 5-inch Electrodynamic
Voice-Coil Impedance ..... 3 ohms at 400 cycles

Power Supply Ratings
A-C Rating ..... 105-125 volts, 50-60 cycles, 50 watts
D-C Rating ..... 105-125 volts, 50 watts

Dial Lamp ..... Mazda 40, 6.3 volts, .15 ampere

©John F. Rider, Publisher

©John F. Rider, Publisher

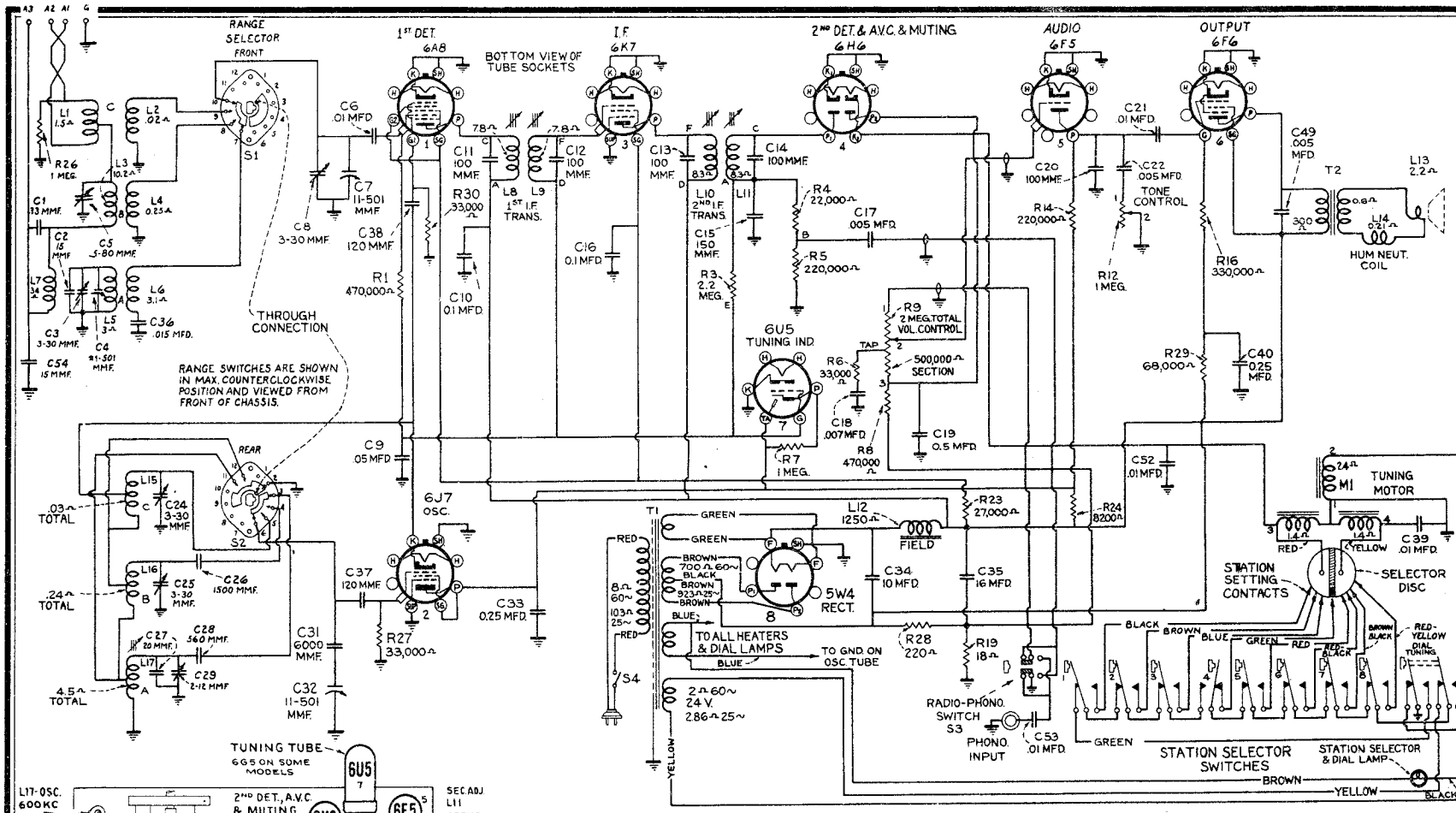

Figure 9—(At Right) Drive Cord Arrangement for Tuning Condenser, Dial Indicator, and Band Switch

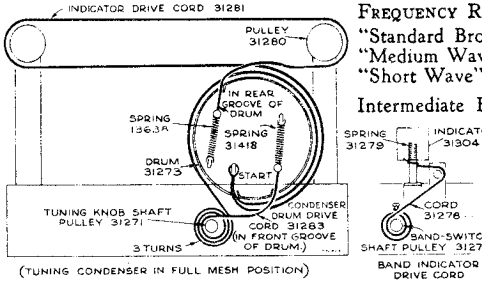

Frequency Ranges

"Standard Broadcast" (A)... 540-1,720 kc
"Medium Wave" (B)..... 2,300-7,000 kc
"Short Wave" (C)..... 7,000-22,000 kc

R-F Alignment Frequencies

"Short Wave" (C)..... 20,000 kc (osc., ant.)
"Medium Wave" (B)..... 6,100 kc (osc.)
"Broadcast" (A)600 kc (osc.), 1,500 kc (osc., ant.)

Intermediate Frequency..... 455 kc

Pilot Lamps (3). one 6-8 volts, .15 amp., and two Mazda 44, 6.3 volts, .25 amp.

Power Supply Ratings

Rating A ..... 105-125 volts, 50-60 cycles, 80 watts
Rating B..... 105-125 volts, 25 cycles, 80 watts
Rating C..... 105-125/140-160/200-250 volts, 50-60 cycles, 80 watts

Power Output

Undistorted..... 2.5 watts
Maximum..... 4.5 watts

Loudspeaker

Type..... 12-inch Electrodynamic
Impedance (v.c.)..... 2.2 ohms at 400 cycles

MODEL 98K
Voltage, Lead Dress
Chassis Wiring, Notes
Transformers

RCA MFG. CO., INC.

Service Data

Loudspeaker.—Centering of the loudspeaker is made in the usual manner with three narrow celluloid or paper feelers after first removing the front dust cover. This may be removed by softening its cement with a light application of acetone, using care not to allow the acetone to flow into the air gap. A dust cover should be cemented in place upon completion of adjustment.

Precautionary Lead Dress.—(1) The lead from the left pilot light should be kept behind the bulb and toward the "Magic Eye," to keep it away from the 6F5 grid cap, (2) leads from mica trimmers to coil should be kept away from the coil and other parts, (3) leads on oscillator coil which are an extended part of the coil winding should be as short as possible, (4) "C" band series capacitor C31 must have leads as short as possible, (5) all leads from antenna board to antenna coils should be dressed toward back apron, (6) the one lead of the line cord and the primary lead of the power transformer which run to the power switch should be twisted together, (7) shielding on leads to Victrola switch should be kept away from the switch terminals and jack.

Victrola Attachment.—A jack located near the "Magic Eye" tube is provided for connecting a Victrola Attachment into the audio-amplifying circuit. The cable running from the Victrola Attachment should be terminated in a Stock No. 31048 plug to fit the jack.

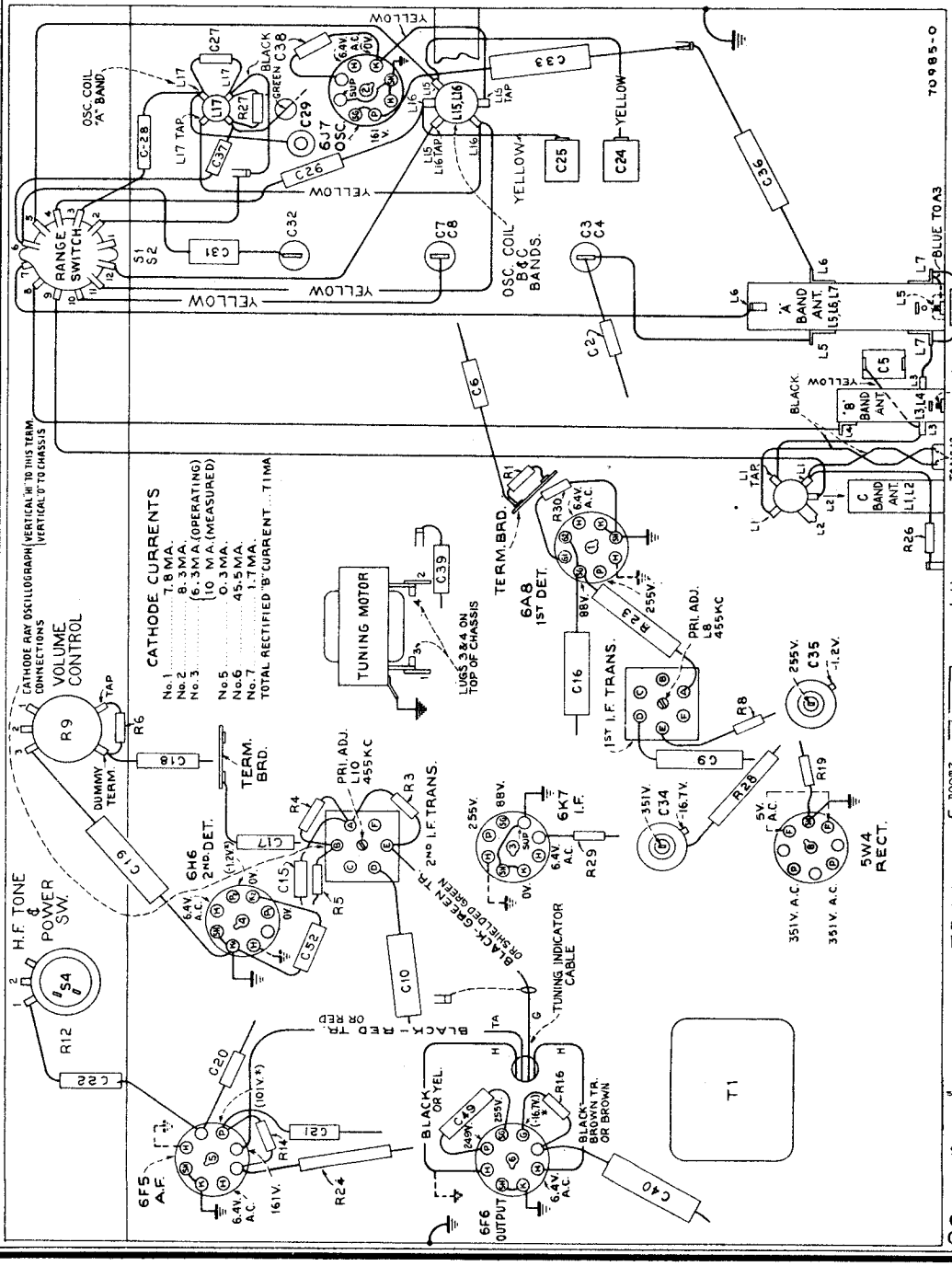

Measurements made to chassis unless otherwise indicated, with set tuned to quiet point, volume control at minimum. Values should hold within approximately ±20% with 117-volt a-c supply.

***NOTE:** Values with star (*) are operating voltages in circuits with high series-resistance, and when measured will read lower depending on the voltmeter loading.

Figure 8— Component Parts of Station-Setting Contact

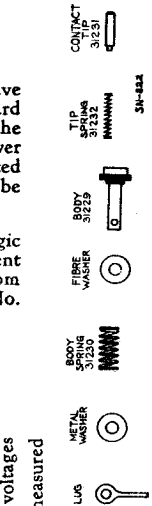

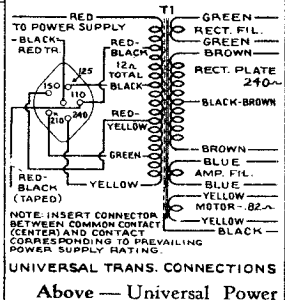

Above — Universal Power Transformer Connections. (110-volt supply for a Victrola Attachment may be obtained by connecting the motor to the red and the red-black leads.)

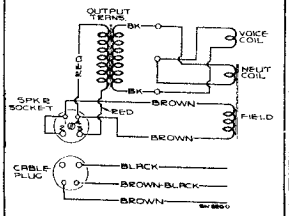

Above — Connections and Colors of Loudspeaker and Cable.

©John F. Rider, Publisher

©John F. Rider, Publisher

Electric Tuning Mechanism

The circuit of the electric tuning mechanism is shown in the schematic diagram, and the mechanical details are illustrated below.

The action can be understood by following a cycle of operation:

When a station button is pushed in, it completes the 24-volt circuit through the corresponding station-setting contact and one-half of the brass selector disc, which is connected to one side of the motor field coil. This energizes the motor, and the rotor is pulled forward, engaging with the gear train that drives the tuning condenser and selector disc. The condenser and disc rotate until the insulation line comes under the particular station-setting contact, and the motor circuit is broken. Inertia carries the insulation line past the station-setting contact which then makes contact to the other half of the disc: This completes the circuit to the other side of the motor field coil, causing the motor to reverse. The floating flywheel is still turning in the original direction and therefore slows down the reversal movement of the motor; as a result the selector disc is moved slowly back until the insulation line is under the station-setting contact, when the circuit is broken and the mechanism stops.

Adjustment of Flywheel Friction

In normal operation, the motor drives the tuning condenser and selector disc until the insulation line just passes the particular station-setting contact: The motor then reverses and moves the disc slowly in the opposite direction until the insulation line is under the contact, and the mechanism stops.

In some cases, particularly with high line-voltage, the disc may make two or three reversals before stopping.

The flywheel friction adjustment screw should be set to give the least number of reversals with the chassis in normal horizontal position.

Adjustment of Selector Disc

The brass selector disc is fastened to the rear shaft of the tuning condenser by means of two set-screws. When the condenser is at maximum (plates fully meshed) the insulation line should be horizontal, with the operating-end at the left (viewed from rear). The operating-end has dark insulating material and the brass is beveled at this end.

The selector disc should be set so that the contact-tip plungers in the station-setting contacts project not more than 1/16-in. from the body of the contacts.

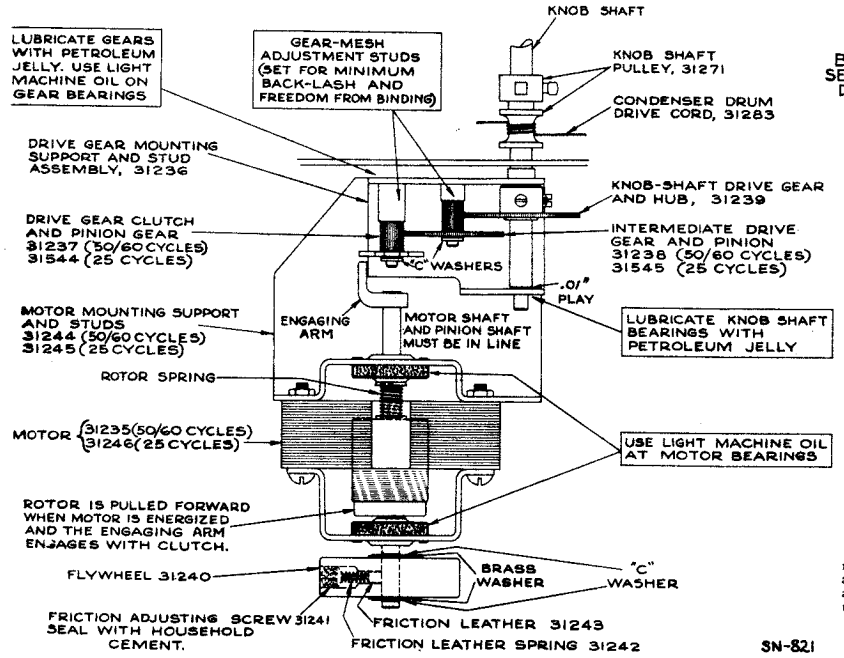

Figure 6—Motor and Gear Mechanism

There must be 1/32-inch clearance between the end of the engaging arm and the face of the intermediate gear when the motor is in its full forward position.

ADJUSTMENTS FOR ELECTRIC TUNING

1. Make a list of the desired eight stations, arranged in order from low to high frequencies.
2. Turn range selector to "A" band, turn power on, and allow a few minutes for warming up.
3. Press down the "dial-tuning" (right-hand) button.
4. Manually tune in the first station on the list, using the "Magic Eye" for accurate tuning.
5. Hold down the "dial-tuning" button, and press down station button No. 1 (second from left). Both buttons will stay down. Move adjusting pin No. 1 to the insulating line on the disc at rear of gang. When the pin is correctly centered on the insulating line, the central dial lamp will go out.
6. Press down any other button in order to release the dial-tuning button and station button No. 1. Then press down station button No. 1 again. The electric tuning mechanism will function to tune in the station, and the central dial lamp will stay on.
7. Repeat this process for the remaining stations.

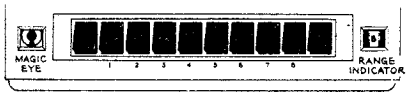

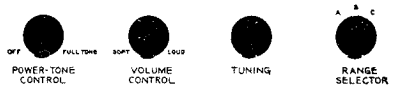

Figure 3—Location of Controls

The left-hand push-button is a Victrola-Attachment switch. The right-hand push-button is for dial tuning.

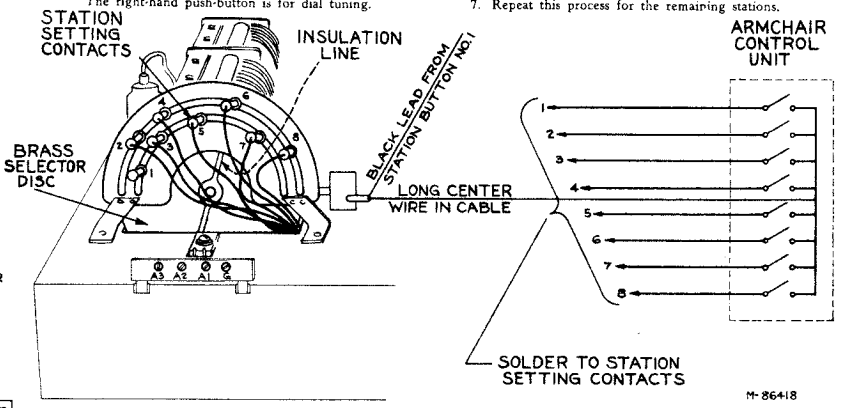

Figure 7—Station-Setting Contacts and Selector Disc

This illustration shows connections for a G8A Armchair Control Unit. This unit is not supplied with the receiver but may be added as an accessory.

Colors of Leads from Push Buttons to Station-Setting Contacts

Station Button	Color of Lead To Station-Setting Contact	Station Button	Color of Lead To Station-Setting Contact
No. 1	Black	No. 5	Red
No. 2	Brown	No. 6	Red-black
No. 3	Blue	No. 7	Brown-black
No. 4	Green	No. 8	Red-yellow

Muting Circuit

When the electric tuning mechanism is in action, the motor-supply voltage is fed into a diode rectifier circuit which applies a high bias to the first-audio amplifier. This prevents audio amplification and makes the set quiet or "mute" while the mechanism is operating.

Lubrication

Motor bearings and **gear bearings;** use light machine oil.
Gear faces; use "Pure Oil No. 611" or petroleum jelly.
Dial-indicator pulleys and **rails;** use "Castordag" or petroleum jelly.

Selector disc; apply ***thin*** film of petroleum jelly.

Friction leather on flywheel: apply "neats-foot" oil. When replacing leather, soak it for at least 24 hours in neats-foot oil, and insert in flywheel while dripping.

Armchair Control Unit

When a Model G8A Armchair Control is connected to the receiver as shown in figure 7 it duplicates the action of the push-buttons on the front panel when No. 1 button is pressed down. The black lead from push-button No. 1 is unsoldered from No. 1 station-setting contact and soldered to a terminal board which is to be mounted on the frame of selector mechanism. In some cases one of the other seven station buttons on the set may be used in place of No. 1 button for the operation of the Armchair Control.

This arrangement allows the use of only seven of the eight buttons when tuning in stations at the set, but allows the use of the entire eight buttons on the Model G8A Armchair Control. In operating the G8A Armchair Control the push-button must be held down until the station has been tuned in. Care must be taken not to hold two of the station-buttons down at one time as both windings of the motor may be engaged instantaneously causing the motor to be inoperative and overheated.

MODEL 98K
Alignment, Parts
Antenna Data

RCA MFG. CO., INC.

Steps	Connect the high side of test-oscillator to —	Tune test-oscillator to —	Range Selector	Set tuning gang to—	Adjust the following for max. peak output
No. 1	6K7 I-F grid cap in series with .01 mfd.	455 kc	"A"	Quiet point between 550-750 kc	L10, L11 (2nd I-F Transformer)
No. 2	6A8 Det. grid cap in series with .01 mfd.	455 kc	"A"		L8, L9 (1st I-F Transformer)
No. 3	A2. Connect A1 to chassis.	20 mc	"C"	20 mc (147.5°)	C24 (osc.)* C8 (det.)†
No. 4	A2, in series with 100 mmfd. Connect A3 to chassis.	6,100 kc	"B"	6,100 kc (145.5°)	C25 (osc.)**
No. 5	A2, in series with 100 mmfd. Connect A3 to chassis.	1,500 kc	"A"	1,500 kc (151.5°)	C29 (osc.) C3 (ant.)
No. 6	A2, in series with 100 mmfd. Connect A3 to chassis.	600 kc	"A"	600 kc (29.5°)	L17 (osc.)
No. 7	A2, in series with 100 mmfd. Connect A3 to chassis.	1,500 kc	"A"	1,500 kc (151.5°)	C29 (osc.)

* Use **minimum** capacity peak if two peaks can be obtained. Check to determine that the correct peak has been used by turning to 141.5° (19,090 kc), at which point a weaker signal should be received.

** Use **minimum** capacity peak if two peaks can be obtained. Check to determine that the correct peak has been used by turning to 124° (5,190 kc), at which point a weaker signal should be received.

† Rock gang condenser and use maximum capacity peak if two peaks can be obtained with C8.

STOCK No.	DESCRIPTION	Unit List Price
	RECEIVER ASSEMBLIES	
31253	Board—Antenna and ground terminal board	.25
31229	Body—Station-setting contact body, less contact tip, and tip spring	.18
12714	Capacitor—Adjustable trimmer, 2-12 mmfd. (C29)	.50
31292	Capacitor—Dual adjustable trimmer, 3-30 mmfd. each section (C24, C25)	.40
31252	Capacitor—Adjustable trimmer, 5-80 mmfd. (C8)	.25
12896	Capacitor—15 mmfd. (C2, C54)	.35
31432	Capacitor—20 mmfd. (C27)	.40
12948	Capacitor—33 mmfd. (C1)	.35
12720	Capacitor—100 mmfd. (C20)	.35
31270	Capacitor—100 mmfd. (C11, C12, C13, C14)	.35
12724	Capacitor—120 mmfd. (C37, C38)	.35
12725	Capacitor—150 mmfd. (C15)	.35
31433	Capacitor—560 mmfd. (C28)	.35
31033	Capacitor—1,500 mmfd. (C26)	.35
31405	Capacitor—6,000 mmfd. (C31)	.75
4838	Capacitor—.005 mfd. (C17, C22, C49)	.25
5148	Capacitor—.007 mfd. (C18)	.20
14393	Capacitor—.01 mfd. (C6, C21, C39, C52, C53)	.30
11315	Capacitor—.015 mfd. (C36)	.20
4886	Capacitor—.05 mfd. (C9)	.20
4839	Capacitor—0.1 mfd. (C10, C16)	.30
12484	Capacitor—0.25 mfd. (C33, C40)	.30
30867	Capacitor—0.5 mfd. (C19)	.30
11203	Capacitor—10 mfd. (C34)	1.15
5212	Capacitor—16 mfd. (C35)	1.35
31237	Clutch—Variable condenser drive gear clutch and pinion gear—engages pin on motor shaft (50-60 cycle models only)	.35
31544	Clutch—Variable condenser drive gear clutch and pinion gear—engages pin on motor shaft (25-cycle models only)	.45
31293	Coil—"A" band antenna coil (L5, L6, L7)	1.30
31296	Coil—"A" band oscillator coil (L17)	1.05
31294	Coil—"B" band antenna coil (L3, L4)	.80
31295	Coil—"B" and "C" band oscillator coil (L15, L16)	.85
31297	Coil—"C" band antenna coil (L1, L2)	.90
31290	Condenser—3-gang variable condenser (C3, C4, C7, C8, C32)	6.50
31231	Contact—Contact tip for station-setting contact	.06
31260	Core—Adjustable core and stud for "A" band oscillator coil	.35
31269	Core—Adjustable core and stud for i-f transformers	.15
31273	Drum—Indicator drive cord drum	.80
31240	Flywheel—Variable condenser drive motor flywheel	.25
31238	Gear—Variable condenser intermediate drive gear and pinion gear (50-60 cycle models only)	.50
31545	Gear—Variable condenser intermediate drive gear and pinion gear (25-cycle models only)	.40
31239	Gear—Variable condenser knob shaft drive gear and hub	.65
11891	Lamp—Dial lamp	.17
31480	Lamp—Electric tuning adjustment indicator lamp	.20
31243	Leather—Friction leather for flywheel	.04
31246	Motor—Variable condenser drive motor (M1)—25-cycle models only	6.50
31235	Motor—Variable condenser drive motor (M1)—50-60 cycle models only	4.85
31228	Plate—Station-setting contact plate — less contacts	.45
31227	Plate—Station-setting contact mounting plate—mounts on rear of variable condenser	.50
5040	Plug—4-contact female plug for speaker cable	.30
31271	Pulley—Motor pulley	.25
31272	Pulley—Range switch pulley	.20
14660	Resistor—18 ohms, ½ watt (R19)	.20
31431	Resistor—220 ohms, wire wound, 1.5 watts (R28)	.18
31430	Resistor—8,200 ohms, wire wound, 1.5 watts (R24)	.22
14284	Resistor—22,000 ohms, 1/10 watt (R4)	.15
14167	Resistor—27,000 ohms, 2 watts (R23)	.25
11300	Resistor—33,000 ohms, 1/10 watt (R6, R27, R30)	.15
12010	Resistor—68,000 ohms, 1/10 watt (R29)	.15
11398	Resistor—220,000 ohms, 1/10 watt (R14)	.15
12264	Resistor—220,000 ohms, ½ watt (R5)	.20
11297	Resistor—330,000 ohms, 1/10 watt (R16)	.15
11452	Resistor—470,000 ohms, 1/10 watt (R1, R8)	.15
12013	Resistor—1 meg., 1/10 watt (R7, R26)	.15
5131	Resistor 2.2 meg., 1/10 watt (R3)	.15
31233	Rotor—Selector rotor disc—mounts on rear of variable condenser shaft	1.16
31241	Screw—¼ x 20 headless, cone point set screw for flywheel	.02
14350	Screw—No. 8-32 square head set screw for selector rotor disc	.03
4119	Screw—No. 8-32 headless set screw for gear, Stock No. 31239	.02
4669	Screw—No. 8-32 square head set screw for pulley, Stock Nos. 31271 and 31272, and drum, Stock No. 31273	.03
31364	Socket—Dial lamp socket	.20
13871	Socket—"Magic Eye" socket	.45
31251	Socket—Radiotron socket	.25
31365	Socket—Tuning indicator lamp insulated socket	.30
31232	Spring—Station-setting contact tip spring	.01
12007	Spring—Retaining spring for core, Stock No. 31269	.02
31230	Spring—Station-setting contact body spring	.01
31262	Spring—Tension spring for core, Stock No. 31260	.01
31242	Spring—Tension spring for flywheel	.01
31244	Support—Variable condenser motor mounting support and studs—for 50-60 cycle models only	.45
31245	Support—Variable condenser motor mounting support and studs—for 25-cycle models only	.70
31236	Support—Variable condenser drive gear mounting support and studs assembly	.65
31291	Switch—Range switch (S1, S2)	.95
31248	Tone Control—H.f. tone control and power switch (R12, S4)	1.50
31267	Transformer—First i-f transformer (L8, L9, C11, C12)	2.20
31268	Transformer—Second i-f transformer (L10, L11, C13, C14)	2.05
31299	Transformer—Power transformer, 105-120 volts, 25-60 cycle (T1)	10.65
31298	Transformer—Power transformer, 105-120 volts, 50-60 cycle (T1)	7.45
31454	Volume Control (R9)	1.50
	SPEAKER ASSEMBLIES (RL-70-F3)	
13866	Cap—Dust cap for cone center	.25
12012	Coil—Field coil (L12)	2.90
11469	Coil—Hum neutralizing coil (L14)	.30
31275	Cone—Speaker cone and voice coil (L13)	1.75
31302	Plug—4-contact male plug	.25
31300	Speaker—Speaker complete	10.95
14358	Screw—Screw, washer, and lockwasher to hold core in yoke	.04
31301	Transformer—Output transformer (T2)	1.70
14357	Washer—Spring washer to hold field coil	.06
	MISCELLANEOUS ASSEMBLIES	
31303	Bracket—Band indicator mounting bracket complete except less band indicating strip, cord, and tension spring	.40
31282	Bracket—"Magic Eye" bracket and holder	.22
31358	Button—Station selector switch push button	.15
31345	Contact—Push button switch contacts—comprising 10 contacts riveted on insulating strip	.70
31344	Contact—Push button switch contacts — comprising 13 contacts riveted on insulating strip	1.20
31278	Cord—Band indicator drive cord	.12
31281	Cord—Indicator pointer drive cord	.50
31283	Cord—Variable condenser drum drive cord	.20
31456	Cover—Eight protective covers for push button markers	.08
31359	Cushion—Station selector push button rubber cushion	.08
31451	Dial—Station selector dial and crystal	.95
31356	Escutcheon—Station selector dial escutcheon only—less dial and push buttons	2.65
31304	Indicator—Band indicator strip	.15
31305	Indicator—Station selector indicator pointer and slide	.40
31355	Knob—Range switch, volume control, tone control, or station selector knob	.12
31346	Lock—Push button switch lock plate—comprising 10 contact locks in one strip	.80
31458	Marker—"Dial Tuning" push button marker	.01
31457	Marker—"Record Player" push button marker	.01
31589	Markers—Station call letter markers	.35
31280	Pulley—Indicator pointer drive cord pulley	.10
14887	Retainer—Indicator pointer drive cord pulley retainer	.01
31306	Screen—Station selector dial color screen and light diffuser	.45
3993	Screw—No. 6-32 square head set screw for pointer slide stop	.05
11210	Screw—Chassis mounting screws, washers, and lockwashers for one chassis	.05
31287	Shaft—Indicator pointer slide shaft	.15
31347	Socket—Pickup socket and bracket	.30
13638	Spring—Indicator pointer drive cord tension spring	.08
31418	Spring—Variable condenser drive cord tension spring	.05
14270	Spring—Retaining spring for knob, Stock No. 31355	.05
31279	Spring—Tension spring for band indicator	.03
31313	Spring—Tension spring for push button switch latch bar	.06
31307	Stop—Indicator pointer slide stop	.30
31360	Switch—Pickup switch for mounting on push button switch assembly (S3)	2.70
31312	Switch—Station selector push button switch and bracket complete	4.25

ALL PRICES ARE SUBJECT TO CHANGE OR WITHDRAWAL WITHOUT NOTICE

ALIGNMENT PROCEDURE

Cathode-Ray Alignment is the preferable method. Connections for the oscillograph are shown in the chassis drawing.

Output Meter Alignment.—If this method is used, connect the meter across the voice coil, and turn the receiver volume control to maximum.

Test-Oscillator.—For all alignment operations, connect the low side of the test-oscillator to the receiver chassis, and keep the output as low as possible to avoid a-v-c action.

Calibration Scale on Indicator-Drive-Cord Drum.—The tuning dial is fastened in the cabinet and cannot be used for reference during alignment, therefore a calibration scale is attached to the rear of the indicator-drive-cord drum which is mounted on the front shaft of the gang condenser. The setting of the gang condenser is read on this scale, which is calibrated in degrees. The correct setting of the gang in degrees, for each alignment frequency, is given in the alignment table.

As the first step in r-f alignment, check the position of the drum. The "0" mark on the drum scale must be vertical, and directly over the center of the gang-condenser shaft when the plates are fully meshed. The drum is held to the shaft by means of two set screws, which must be tightened securely when the drum is in the correct position.

Pointer for Calibration Scale.—Improvise a pointer for the calibration scale by fastening a piece of wire to the gang condenser frame, and bend the wire so that it points to the "0" mark on the calibration scale when the plates are fully meshed.

Dial-Indicator Adjustment.—After fastening the chassis in the cabinet, attach the dial indicator to the drive cable with indicator at the 530 kc mark, and gang condenser fully meshed. The indicator has a spring clip for attachment to the cable.

Antenna Connections

RCA Victor Master Antenna Kit.—Connect the twisted-pair transmission line to terminals A1 and A2 on the terminal board at rear of chassis. Connect the counter-poise to A3. Terminal G may be connected to ground, but this connection is not necessary for correct operation.

Noise-Reducing Adjustment.—After the RCA Victor Master Antenna Kit is connected to the receiver, tune the receiver to a point near 900 kc where no station is heard. Turn volume control clockwise until noise is heard. If no noise of a regular character is audible, start any brush-type motor-driven appliance, such as a vacuum cleaner, electric razor, refrigerator, etc., but do not bring it too near the receiver. This will generate noise as a continuous crackling, or buzz. Adjust C5, which is mounted behind the antenna terminal board, to a point where this noise is reduced to a minimum. Adjustment of the noise-reducing trimmer should be made in the customer's home, with the Master Antenna connected to receiver.

This adjustment is effective only when the RCA Victor Master Antenna is used. For all other types of antenna, the noise-adjustment trimmer C5 should be screwed all the way down.

Other Antennas.—Use terminals A1 and A3 on the receiver terminal board as antenna and ground connecting points respectively. Terminal A3 may be connected to terminal G, unless this causes interference, in which case this connection should be omitted.

©John F. Rider, Publisher

RCA MFG. CO., INC.

MODELS 99K, 99T
Schematic, Socket
Trimmers, Transformer

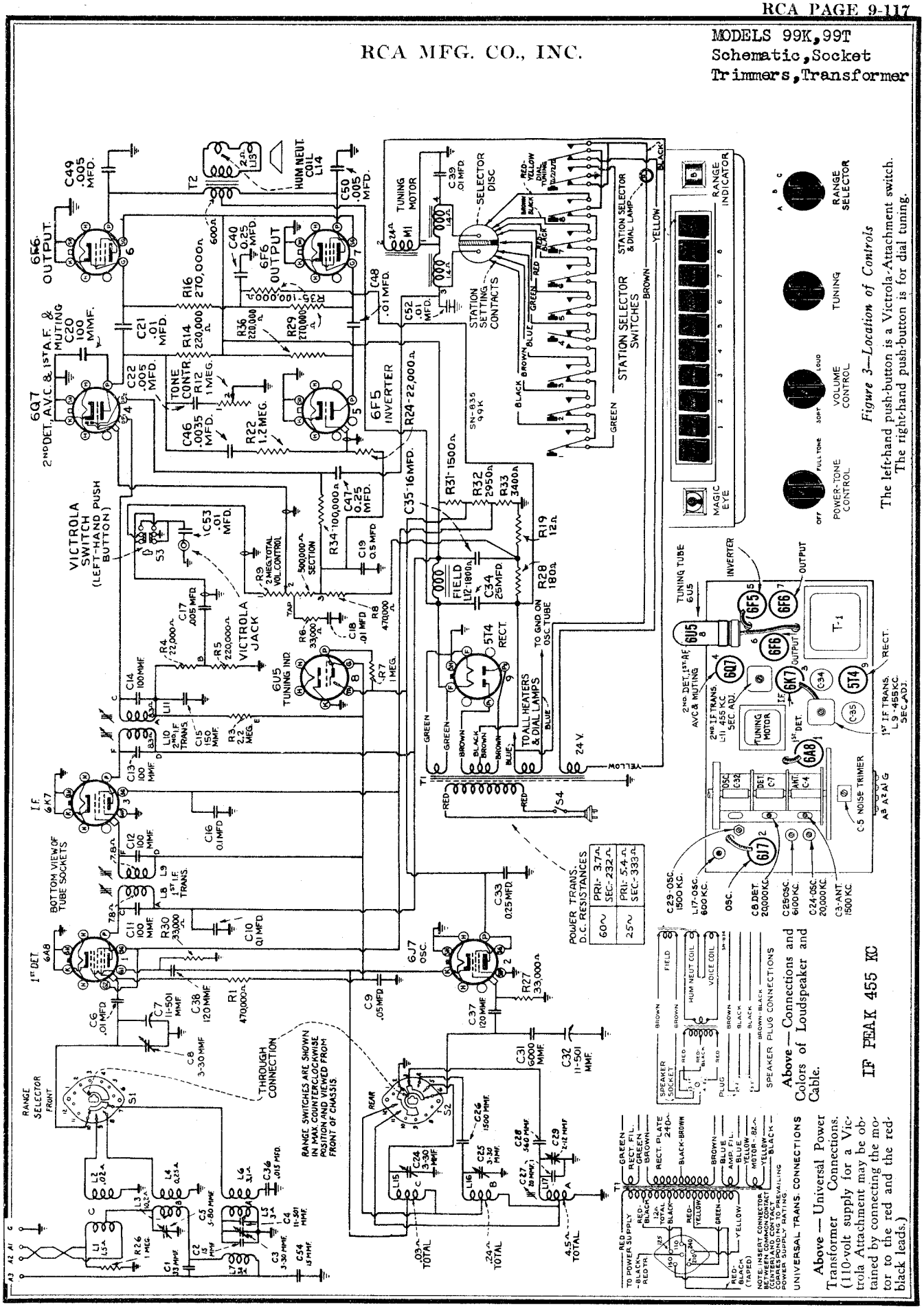

Figure 3—Location of Controls

The left-hand push-button is a Victrola-Attachment switch. The right-hand push-button is for dial tuning.

Above — Universal Power Transformer Connections. (110-volt supply for a Victrola Attachment may be obtained by connecting the motor to the red and the red-black leads.)

Above — Connections and Colors of Loudspeaker and Cable.

IF PEAK 455 KC

©John F. Rider, Publisher

MODELS 99K,99T
Voltage,Chassis Wiring
Tuner

RCA MFG. CO., INC.

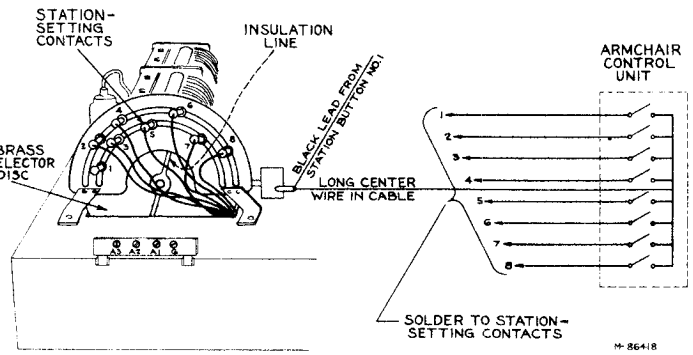

Figure 7—Station-Setting Contacts and Selector Disc

This illustration shows connections for a G8A Armchair Control Unit. This unit is not supplied with the receiver but may be added as an accessory.

Station Button	Color of Lead To Station-Setting Contact
No. 1	Black
No. 2	Brown
No. 3	Blue
No. 4	Green
No. 5	Red
No. 6	Red-black
No. 7	Brown-black
No. 8	Red-yellow

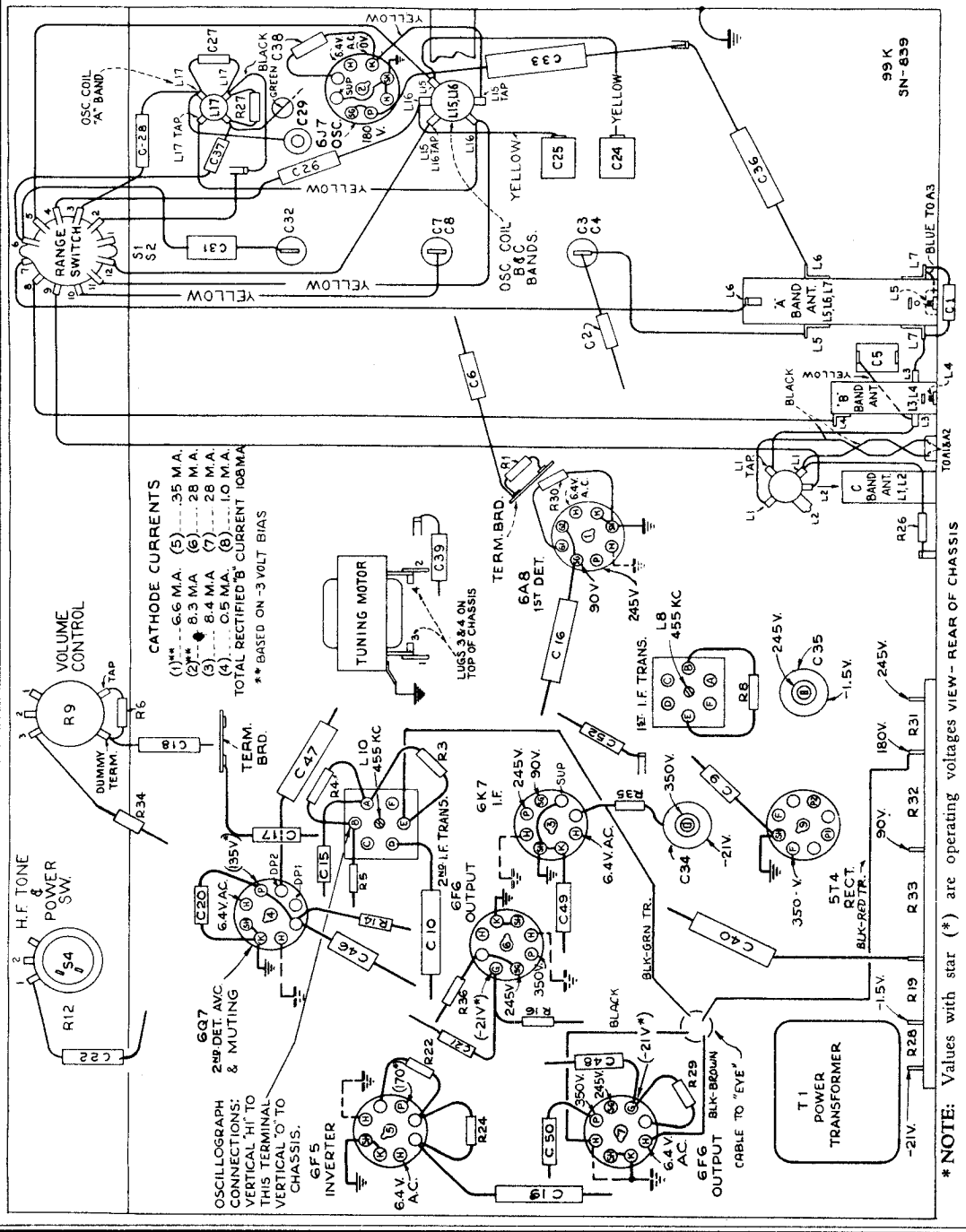

Figure 8— Component Parts of Station-Setting Contact

Muting Circuit

When the electric tuning mechanism is in action, the motor-supply voltage is fed into a diode rectifier circuit which applies a high bias to the first-audio tubes. This prevents audio amplification and makes the set quiet or "mute" while the mechanism is operating.

Figure 4—R-F Wiring Diagram. Measurements made to chassis unless otherwise indicated, with set tuned to quiet point and volume control at minimum. Values should hold within approximately ±20% with 117-volt a-c supply.

*NOTE: Values with star (*) are operating voltages in circuits with high series-resistance. The actual measured voltages will be lower, depending on the voltmeter loading.

©John F. Rider, Publisher

©John F. Rider, Publisher

Precautionary Lead Dress.—(1) The lead from the left pilot light should be kept behind the bulb and toward the Magic Eye, to keep it away from the 6F5 grid cap, (2) leads from mica trimmers to coil should be kept away from the coil and other parts, (3) leads on oscillator coil which are an extended part of the coil winding should be as short as possible, (4) "C" band series capacitor C31 must have leads as short as possible, (5) all leads from antenna board to antenna coils should be dressed toward back apron, (6) the one lead of the line cord and the primary lead of the power transformer which run to the power switch should be twisted together, (7) shielding on leads to phono. switch should be kept away from the switch terminals and jack.

Electric Tuning Mechanism

The circuit of the electric tuning mechanism is shown in the schematic diagram, and the mechanical details are illustrated below.

The action can be understood by following a cycle of operation:

When a station button is pushed in, it completes the 24-volt circuit through the corresponding station-setting contact and one-half of the brass selector disc, which is connected to one side of the motor field coil. This energizes the motor, and the rotor is pulled forward, engaging with the gear train that drives the tuning condenser and selector disc. The condenser and disc rotate until the insulation line comes under the particular station-setting contact, and the motor circuit is broken. Inertia carries the insulation line past the station-setting contact which then makes contact to the other half of the disc. This completes the circuit to the other side of the motor field coil, causing the motor to reverse. The floating flywheel is still turning in the original direction and therefore slows down the reversal movement of the motor; as a result the selector disc is moved slowly back until the insulation line is under the station-setting contact, when the circuit is broken and the mechanism stops.

Adjustment of Flywheel Friction

In normal operation, the motor drives the tuning condenser and selector disc until the insulation line just passes the particular station-setting contact. The motor then reverses and moves the disc slowly in the opposite direction until the insulation line is under the contact, and the mechanism stops.

In some cases, particularly with high line-voltage, the disc may make two or three reversals before stopping.

The flywheel friction adjustment screw should be set to give the least number of reversals with the chassis in normal horizontal position.

Adjustment of Selector Disc

The brass selector disc is fastened to the rear shaft of the tuning condenser by means of two set-screws. When the condenser is at maximum (plates fully meshed) the insulation line should be horizontal, with the operating-end at the left (viewed from rear). The operating-end has dark insulating material and the brass is beveled at this end.

The selector disc should be set so that the contact-tip plungers in the station-setting contacts project not more than 1/16-in. from the body of the contacts.

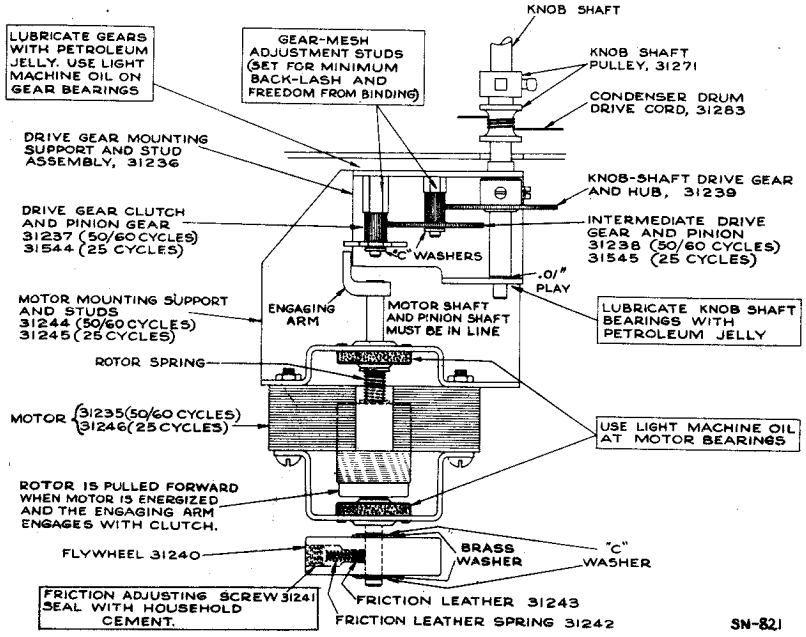

Figure 6—Motor and Gear Mechanism

There must be 1/32-inch clearance between the end of the engaging arm and the face of the intermediate gear when the motor is in its full forward position.

ALIGNMENT PROCEDURE

Cathode-Ray Alignment is the preferable method. Connections for the oscillograph are shown in the chassis drawing.

Output Meter Alignment.—If this method is used, connect the meter across the voice coil, and turn the receiver volume control to maximum.

Test-Oscillator.—For all alignment operations, connect the low side of the test-oscillator to the receiver chassis, and keep the output as low as possible to avoid a-v-c action.

Calibration Scale on Indicator-Drive-Cord Drum.—The tuning dial is fastened in the cabinet and cannot be used for reference during alignment, therefore a calibration scale is attached to the rear of the indicator-drive-cord drum which is mounted on the front shaft of the gang condenser. The setting of the gang condenser is read on this scale, which is calibrated in degrees. The correct setting of the gang in degrees, for each alignment frequency, is given in the alignment table.

As the first step in r-f alignment, check the position of the drum. The "0" mark on the drum scale must be vertical, and directly over the center of the gang-condenser shaft when the plates are fully meshed. The drum is held to the shaft by means of two set screws, which must be tightened securely when the drum is in the correct position.

Pointer for Calibration Scale.—Improvise a pointer for the calibration scale by fastening a piece of wire to the gang-condenser frame, and bend the wire so that it points to the "0" mark on the calibration scale when the plates are fully meshed.

Dial-Indicator Adjustment.—After fastening the chassis in the cabinet, attach the dial indicator to the drive cable with indicator at the 530 kc mark, and gang condenser fully meshed. The indicator has a spring clip for attachment to the cable.

For additional details, refer to booklet "RCA Victor Receiver Alignment."

Steps	Connect the high side of test-oscillator to —	Tune test-oscillator to —	Range Selector	Set tuning gang to—	Adjust the following for max. peak output
No. 1	6K7 I-F grid cap in series with .01 mfd.	455 kc	"A"	Quiet point between 550-750 kc	L10, L11 (2nd I-F Transformer)
No. 2	6A8 Det. grid cap in series with .01 mfd.	455 kc	"A"		L8, L9 (1st I-F Transformer)
No. 3	A2. Connect A1 to chassis.	20 mc	"C"	20 mc (147.5°)	C24 (osc.)* C8 (det.)†
No. 4	A2, in series with 100 mmfd. Connect A3 to chassis.	6,100 kc	"B"	6,100 kc (145.5°)	C25 (osc.)**
No. 5	A2, in series with 100 mmfd. Connect A3 to chassis.	1,500 kc	"A"	1,500 kc (151.5°)	C29 (osc.) C3 (ant.)
No. 6	A2, in series with 100 mmfd. Connect A3 to chassis.	600 kc	"A"	600 kc (29.5°)	L17 (osc.)
No. 7	A2, in series with 100 mmfd. Connect A3 to chassis.	1,500 kc	"A"	1,500 kc (151.5°)	C29 (osc.)

* Use **minimum** capacity peak if two peaks can be obtained. Check to determine that the correct peak has been used by turning to 141.5° (19,090 kc), at which point a weaker signal should be received.

** Use **minimum** capacity peak if two peaks can be obtained. Check to determine that the correct peak has been used by turning to 124° (5,190 kc), at which point a weaker signal should be received.

† Rock gang condenser and use maximum capacity peak if two peaks can be obtained with C8.

ADJUSTMENTS FOR ELECTRIC TUNING

1. Make a list of the desired eight stations, arranged in order from low to high frequencies.
2. Turn range selector to "A" band, turn power on, and allow a few minutes for warming up.
3. Press down the "dial-tuning" (right-hand) button.
4. Manually tune in the first station on the list, using the "Magic Eye" for accurate tuning.
5. Hold down the "dial-tuning" button, and press down station button No. 1 (second from left). Both buttons will stay down. Move station-setting contact No. 1 to the insulating line on the disc at rear of gang. When the contact is correctly centered on the insulating line, the central dial lamp will go out.
6. Press down any other button in order to release the dial-tuning button and station button No. 1. Then press down station button No. 1 again. The electric tuning mechanism will function to tune in the station, and the central dial lamp will stay on.
7. Repeat this process for the remaining stations.

Armchair Control Unit

When a Model G8A Armchair Control is connected to the receiver as shown in figure 7 it duplicates the action of the push-buttons on the front panel when No. 1 button is pressed down. The black lead from push-button No. 1 is unsoldered from No. 1 station-setting contact and soldered to a terminal board which is to be mounted on the frame of selector mechanism. In some cases one of the other seven station buttons on the set may be used in place of No. 1 button for the operation of the Armchair Control.

This arrangement allows the use of only seven of the eight buttons when tuning in stations at the set, but allows the use of the entire eight buttons on the Model G8A Armchair Control. In operating the G8A Armchair Control the push-button must be held down until the station has been tuned in. Care must be taken not to hold two of the station-buttons down at one time as both windings of the motor may be engaged simultaneously causing the motor to be inoperative and overheated.

FREQUENCY RANGES

"Standard Broadcast" (A)..... 540-1,720 kc
"Medium Wave" (B)..... 2,300-7,000 kc
"Short Wave" (C)..... 7,000-22,000 kc

R-F ALIGNMENT FREQUENCIES

"Short Wave" (C)..... 20,000 kc (osc., ant.)
"Medium Wave" (B)..... 6,100 kc (osc.)
"Broadcast" (A)..... 600 kc (osc.), 1,500 kc (osc., ant.)

Intermediate Frequency..... 455 kc

Pilot Lamps (3)..... One Mazda 47, 6-8 volts, .15 amp.; two Mazda 44, 6.3 volts, .25 amp.

POWER SUPPLY RATINGS

Rating A..... 105-125 volts, 50-60 cycles, 120 watts
Rating B..... 105-125 volts, 25-30 cycles, 120 watts
Rating C..... 105-125/140-160/200-250 volts, 50-60 cycles, 120 watts

POWER OUTPUT

Undistorted..... 10 watts
Maximum..... 12 watts

LOUDSPEAKER

Type..... Electrodynamic
Impedance (v.c.)..... 2.2 ohms at 400 cycles

MODELS 99K, 99T
Drive Data, Parts
Notes

RCA MFG. CO., INC.

Service Data

Loudspeaker.—Centering of the loudspeaker is made in the usual manner with three narrow celluloid or paper feelers after first removing the front dust cover. This may be removed by softening its cement with a light application of acetone, using care not to allow the acetone to flow into the air gap. A dust cover should be cemented in place upon completion of adjustment.

Victrola Attachment.—A jack located near the "Magic Eye" tube is provided for connecting a Victrola Attachment into the audio-amplifying circuit. The cable running from the Victrola Attachment should be terminated in a Stock No. 31048 plug to fit the jack.

Lubrication

Motor bearings and **gear bearings;** use light machine oil.

Gear faces; use "Pure Oil No. 611" or petroleum jelly.

Dial-indicator pulleys and **rails;** use "Castordag" or petroleum jelly.

Selector disc; apply *thin* film of petroleum jelly.

Friction leather on flywheel; apply "neats-foot" oil. When replacing leather, soak it for at least 24 hours in neats-foot oil, and insert in flywheel while dripping.

STOCK No.	DESCRIPTION	Unit List Price
	RECEIVER ASSEMBLIES	
31253	Board—Antenna and ground terminal board	.25
31229	Body—Station-setting contact body, less contact tip and tip spring	.18
12714	Capacitor—Adjustable trimmer 2-12 mmfd. (C29)	1.50
31292	Capacitor—Dual adjustable trimmer 3-30 mmfd. each section (C24, C25)	.40
31252	Capacitor—Adjustable trimmer 5-80 mmfd. (C5)	.25
12896	Capacitor—15 mmfd. (C2, C54)	.35
12948	Capacitor—33 mmfd. (C1)	.35
31432	Capacitor—20 mmfd. (C27)	.40
12720	Capacitor—100 mmfd. (C20)	.35
31270	Capacitor—100 mmfd. (C11, C12, C13, C14)	.35
5212	Capacitor—18 mfd. (C35)	1.35
14531	Capacitor—25 mfd. (C34)	1.55
31237	Clutch—Variable condenser drive gear clutch and pinion gear—engages pin on motor shaft (50/60 cycle models only)	.35
31544	Clutch—Variable condenser drive gear clutch and pinion gear—engages pin on motor shaft (25 cycle models only)	.45
31293	Coil—"A" band antenna coil (L5, L6, L7)	1.30
31296	Coil—"A" band oscillator coil (L17)	1.05
31294	Coil—"B" band antenna coil (L3, L4)	.80
31295	Coil—"B" and "C" band oscillator coil (L15, L16)	.85
31297	Coil—"C" band antenna coil (L1, L2)	.90
31290	Condenser—3-gang variable condenser (C3, C4, C7, C8, C32)	6.50
31231	Contact—Contact tip for station-setting contact	.06
31269	Core—Adjustable core and stud for i-f transformers	.15
31280	Core—Adjustable core and stud for "A" band oscillator coil	.35
31273	Drum—Indicator drive cord drum	.80
31240	Flywheel—Variable condenser drive motor flywheel	.25
31239	Gear—Variable condenser knob shaft drive gear and hub	.65
31238	Gear—Variable condenser intermediate drive gear and pinion gear (50/60 cycle models only)	.50
31545	Gear—Variable condenser intermediate drive gear and pinion gear (25 cycle models only)	.40
11891	Lamp—Dial lamp	.17
31480	Lamp—Electric tuning adjustment indicator lamp	.20
31243	Leather—Friction leather for flywheel	.04
31246	Motor—Variable condenser drive motor (M1)—25 cycle models only	6.50
31235	Motor—Variable condenser drive motor (M1)—50/60 cycle models only	4.85
31228	Plate—Station-setting contact plate—less contacts	.45
31227	Plate—Station-setting contact mounting plate—mounts on rear of variable condenser	.50
5040	Plug—4-contact female plug for speaker cable	.30
31271	Pulley—Motor pulley	.25
31272	Pulley—Range switch pulley	.20
31250	Resistor—Voltage divider comprising one 1,500 ohm, one 2,950 ohm, one 3,400 ohm, one 12 ohm, and one 180 ohm sections (R19, R28, R31, R32, R33)	.90
14284	Resistor—22,000 ohms, 1/10 watt (R24)	.15
13998	Resistor—22,000 ohms, ½ watt (R4)	.20
11300	Resistor—33,000 ohms, 1/10 watt (R27, R30)	.15
12454	Resistor—33,000 ohms, ½ watt (R6)	.20
11281	Resistor—100,000 ohms, 1/10 watt (R34)	.15
14560	Resistor—100,000 ohms, ½ watt (R35)	.20
11398	Resistor—220,000 ohms, 1/10 watt (R14, R36)	.15
12264	Resistor—220,000 ohms, ½ watt (R5)	.20
11453	Resistor—270,000 ohms, 1/10 watt (R16, R29)	.15
11452	Resistor—470,000 ohms, 1/10 watt (R1)	.15
12285	Resistor—470,000 ohms, ½ watt (R8)	.20
12013	Resistor—1 meg., 1/10 watt (R7, R26)	.15
31056	Resistor—1.2 meg., 1/10 watt (R22)	.15
5131	Resistor—2.2 meg., 1/10 watt (R3)	.15
31233	Rotor—Selector rotor disc—mounts on rear of variable condenser shaft	1.16
31241	Screw—¼ x 20 headless cone point set screw for flywheel	.02
4119	Screw—No. 8-32 headless set screw for gear Stock No. 31239	.02
14350	Screw—No. 8-32 square head set screw for selector rotor disc	.03
4669	Screw—No. 8-32 square head set screw for pulley Stock Nos. 31271 and 31272, and drum Stock No. 31273	.03
31364	Socket—Dial lamp socket	.20
13871	Socket—Magic Eye socket	.45
31251	Socket—Radiotron socket	.25
31365	Socket—Tuning indicator lamp insulated socket	.30
31232	Spring—Contact tip spring for station-setting contact	.01
12007	Spring—Retaining spring for core Stock No. 31269	.02
31262	Spring—Tension spring for core Stock No. 31260	.01
31230	Spring—Station-setting contact body spring	.01
31242	Spring—Tension spring for flywheel	.01
31236	Support—Variable condenser drive gear mounting support and studs assembly	.65
31244	Support—Variable condenser motor mounting support and studs for 50/60 cycle models only	.45
31245	Support—Variable condenser motor mounting support and studs—for 25 cycle models	.70
31291	Switch—Range switch (S1, S2)	.95
31248	Tone Control—H.f. tone control and power switch (R12, S4)	1.50
31267	Transformer—First i-f transformer (L8, L9, C11, C12)	2.20
31268	Transformer—Second i-f transformer (L10, L11, C13, C14)	2.05
31308	Transformer—Power transformer 105-130, 140-160, 200-250 volts, 50-60 cycle (T1)	13.85
31226	Transformer—Power transformer 110 volts, 25-60 cycle (T1)	13.00
31225	Transformer—Power transformer 110 volts, 50-60 cycle (T1)	8.50
31450	Volume Control (R9)	1.50
12724	Capacitor—120 mmfd. (C37, C38)	.35
12725	Capacitor—150 mmfd. (C15)	.35
31433	Capacitor—560 mmfd. (C28)	.35
31033	Capacitor—1,500 mmfd. (C26)	.35
31405	Capacitor—6,000 mmfd. (C31)	.75
30303	Capacitor—.0035 mfd. (C46)	.40
4838	Capacitor—.005 mfd. (C17, C22, C49, C50)	.25
14393	Capacitor—.01 mfd. (C6, C18, C21, C39, C48, C52, C53)	.30
11315	Capacitor—.015 mfd. (C36)	.20
30882	Capacitor—.05 mfd. (C9)	.20
4839	Capacitor—0.1 mfd. (C10, C16)	.30
30965	Capacitor—0.25 mfd. (C33, C40, C47)	.30
30867	Capacitor—0.5 mfd. (C19)	.30
	SPEAKER ASSEMBLIES (Speaker RL-63-H6) Model 99T	
14356	Board—3-contact reproducer terminal board	.15
13866	Cap—Cone center dust cap	.25
11234	Coil—Field coil (L12)	3.85
11469	Coil—Hum neutralizing coil (L14)	.30
31310	Cone—Speaker cone and voice coil (L13)	1.75
5039	Plug—4-contact male plug for speaker	.30
31309	Speaker—Complete	11.20
14358	Screw—Screw, washer, and lockwasher to hold core in yoke	.04
14534	Transformer—Output transformer (T2)	3.85
14357	Washer—Spring washer to hold field coil	.06
	SPEAKER ASSEMBLIES (Speaker RL-70-H2) Model 99K	
13866	**Cap—Dust cap for cone center**	.03
11234	**Coil—Field coil (L12)**	3.85
11469	**Coil—Neutralizing coil (L14)**	.30
31275	**Cone—Speaker cone and voice coil (L13)**	1.75
5039	**Plug—4-contact male plug for speaker**	.30
31530	**Speaker—Complete**	12.35
14534	**Transformer—Output transformer (T2)**	3.85
14357	**Washer—Spring washer to hold field coil securely**	.06
	SPEAKER ASSEMBLIES (Speaker RL-70-E2) Model 99K	
13866	Cap—Dust cap for cone center	.03
11234	Coil—Field coil (L12)	3.85
11469	Coil—Neutralizing coil (L14)	.30
12667	Cone—Speaker cone and voice coil (L13)	1.95
5039	Plug—4-contact male plug for speaker	.30
14535	Speaker—Complete	12.90
14358	Screw—Screws, washers, and lockwashers to hold core in yoke	.04
14534	Transformer—Output transformer (T2)	3.85
14357	Washer—Spring washer to hold field coil	.06
	MISCELLANEOUS ASSEMBLIES	
31303	Bracket—Band indicator mounting bracket complete less indicator strip, cord, and tension spring—Model 99K	.40
31276	Bracket—Band indicator mounting bracket complete less indicator strip, cord, and tension spring—Model 99T	.40
31282	Bracket—Magic Eye mounting bracket and holder	.22
31358	Button—Station selector push button	.15
31345	Contact—Push button switch contacts—comprising 10 contacts riveted on insulating strip	.70
31344	Contact—Push button switch contacts—comprising 13 contacts riveted on insulating strip	1.20
31278	Cord—Band indicator drive cord	.12
31281	Cord—Indicator pointer drive cord	.50
31283	Cord—Variable condenser drum drive cord	.20
31456	Cover—8 protective covers for push button markers	.08
31359	Cushion—Station selector push button rubber cushion	.08
31451	Dial—Station selector dial scale and crystal	.95
31356	Escutcheon—Station selector dial escutcheon—less dial scale and push buttons—Model 99K	2.65
31361	Escutcheon—Station selector dial escutcheon—less dial scale and push buttons—Model 99T	2.20
31304	Indicator—Band indicator strip	.15
31305	Indicator—Station selector indicator pointer	.40
31355	Knob—Range switch, volume control, tone control, or station selector knob	.12
31346	Lock—Push button switch lock plate—comprising 10 contact locks in one strip	.80
31589	Markers—Station call letter markers for push buttons	.35
31457	Marker—"Record Player" marker for push button	.01
31458	Marker—"Dial Tuning" marker for push button	.01
31280	Pulley—Indicator pointer drive cord pulley	.10
14887	Retainer—Indicator pointer drive cord pulley retainer	.01
31306	Screen—Station selector dial color screen and light diffuser	.45
11210	Screw—Chassis mounting screws, washers, and lockwashers for one chassis	.05
3993	Screw—No. 6-32 square head set screw for pointer slide stop	.05
31287	Shaft—Indicator pointer slide shaft	.15
31347	Socket—Pickup socket and bracket	.30
31279	Spring—Band indicator tension spring	.03
13638	Spring—Indicator pointer drive cord tension spring	.08
31418	Spring—Variable condenser drum drive-cord tension spring	.05
14270	Spring—Retaining spring for knob Stock No. 31355	.05
31313	Spring—Tension spring for push button switch latch bar	.06
31307	Stop—Indicator pointer slide stop	.30
31312	Switch—Station selector push button switch and bracket complete	4.25
31360	Switch—Pickup switch for mounting on push button switch assembly (S3)	2.70

ALL PRICES ARE SUBJECT TO CHANGE OR WITHDRAWAL WITHOUT NOTICE.

Antenna Connections

RCA Victor Master Antenna Kit.—Connect the twisted-pair transmission line to terminals A1 and A2 on the terminal board at rear of chassis. Connect the counterpoise to A3. Terminal G may be connected to ground, but this connection is not necessary for correct operation.

Noise-Reducing Adjustment.—After the RCA Victor Master Antenna Kit is connected to the receiver, tune the receiver to a point near 900 kc where no station is heard. Turn volume control clockwise until noise is heard. If no noise of a regular character is audible, start any brush-type motor-driven appliance, such as a vacuum cleaner, electric razor, refrigerator, etc., but do not bring it too near the receiver. This will generate noise as a continuous crackling or buzz. Adjust C5, which is mounted behind the antenna terminal board, to a point where this noise is reduced to a minimum.

Adjustment of the noise-reducing trimmer should be made in the customer's home, with the Master Antenna connected to receiver.

This adjustment is effective only when the RCA Victor Master Antenna is used. For all other types of antenna, the noise-adjustment trimmer C5 should be screwed all the way down.

Other Antennas.—Use terminals A1 and A3 on the receiver terminal board as antenna and ground connecting points respectively. Terminal A3 may be connected to terminal G, unless this causes interference, in which case this connection should be omitted.

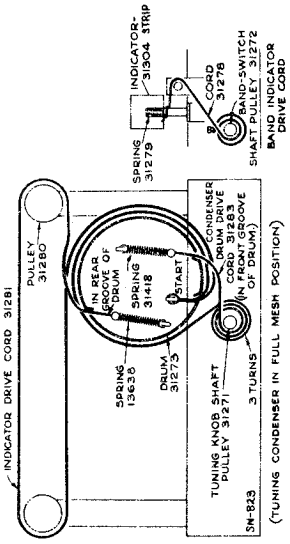

Figure 9—(At Right) Drive Cord Arrangement for Tuning Condenser, Dial Indicator, and Band Switch

©John F. Rider, Publisher

©John F. Rider, Publisher

RCA MFG. CO., INC.

MODELS U105, U107

Schematic

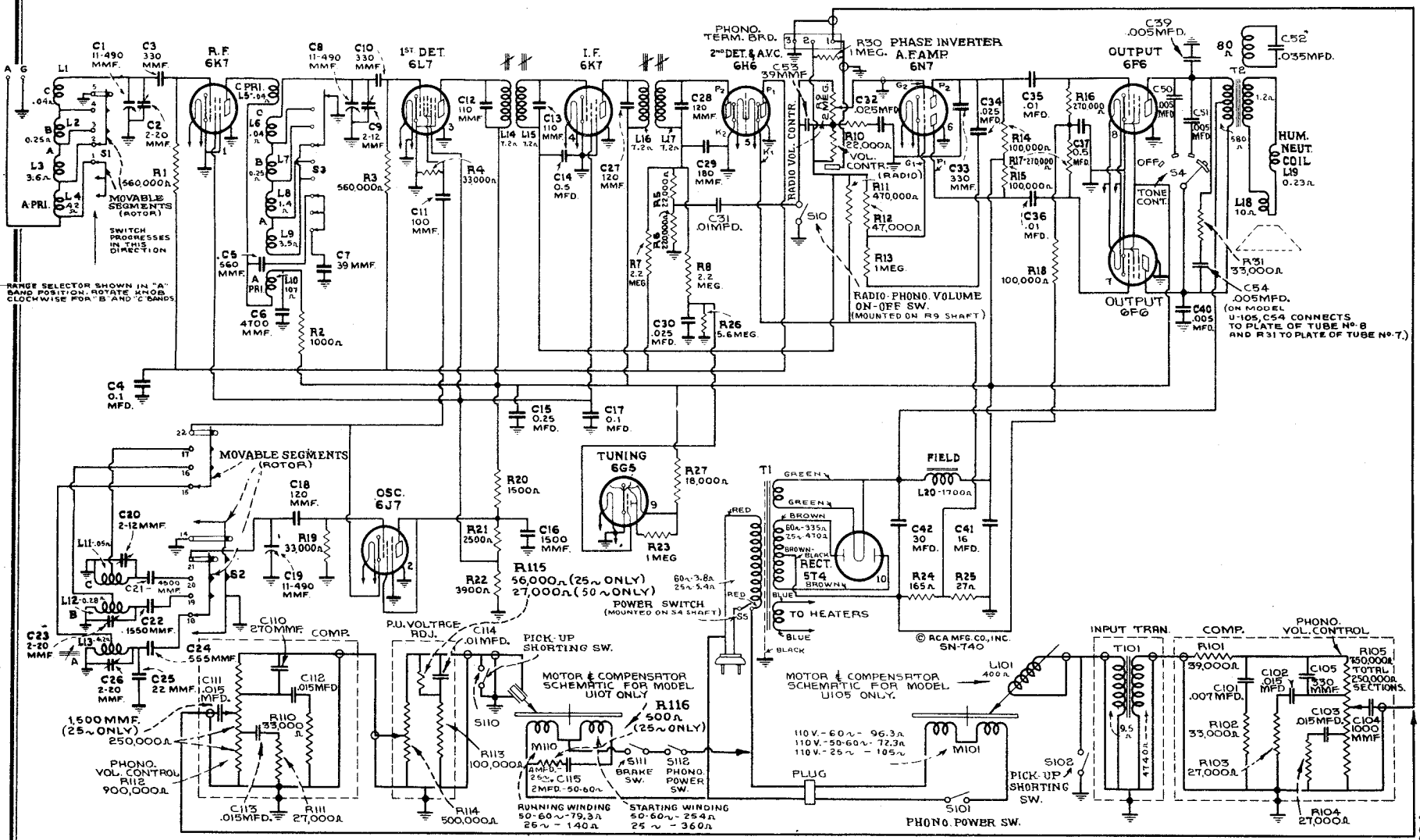

Frequency Ranges

"Broadcast" (A)	530-1,720 kc
"Medium Wave" (B)	2,100-6,800 kc
"Short Wave" (C)	6,800-22,000 kc
Intermediate Frequency	460 kc

R-F Alignment Frequencies

"Short Wave" (C)	20,000 kc (osc., det., ant.)
"Medium Wave" (B)	6,000 kc (osc.)
"Broadcast" (A)	600 kc (osc.), 1,500 kc (osc.)

Copyright, 1937, RCA Manufacturing Co., Inc.

Trademarks "Radiotron," "Magic Eye," "Magic Brain," "Magic Voice" Reg. U. S. Pat. Off. by RCA Mfg. Co., Inc.

MODELS U105,U107
Circuit Data,Lead Dress
Pick-up Data,Specs.

RCA MFG. CO., INC.

General Description

The Model U-107 combination instrument consists of a ten-tube, three-band, "Magic Brain," superheterodyne receiver and an automatically operated phonograph combined in a console-type cabinet. Features of design include an r-f amplifier stage, "qumulative-wound" antenna and r-f transformers for high signal-to-noise ratio in "A" Band; magnetite-core adjusted i-f transformers and low-frequency "A" oscillator tracking; automatic volume control; plunger-type, air-dielectric trimming capacitors; "Magic Eye" tuning tube; aural-compensated radio and phonograph audio-volume controls; three-point tone control; audio phase-inverter voltage amplifier; push-pull power-output stage; crystal pickup; improved super-sensitive dust-proof electrodynamic loudspeaker; and the "Sonic-Arc" Magic Voice. The record changer may be operated automatically or manually on both 10-inch and 12-inch records.

The Model U-105 combination instrument consists of a similar radio receiver combined with a smaller automatically operated phonograph. This record changer will change seven 10-inch records or repeat 12-inch records automatically. It may be operated manually if desired.

Service Data

The various diagrams of this booklet contain such information as will be needed to isolate causes for defective operation if such develops. The ratings of the resistors, capacitors, coils, etc., are indicated adjacent to the symbols signifying these parts on the diagrams. Identification titles such as R1, L1, C1, etc., provide reference between the illustrations and Replacement Parts List. The coils, transformer windings, and reactors are rated in terms of d-c resistance to permit continuity checks.

Loudspeaker.—Two types of loudspeakers are used which will be referred to as types 1 and 2. In type 1 the cone centering diaphragm is cemented to a fixed ring, while in type 2 the centering diaphragm is cemented to an adjustable ring. Replacement of cone for either type is identical. Centering of cone for "type 1" loudspeaker is made with three narrow celluloid or paper feelers after first removing the front dust cover and cutting free the cone centering diaphragm. The dust cover may be removed by a light application of acetone, using care not to allow the acetone to flow into the air gap. The centering diaphragm should be cemented in place after placement of feelers. Sufficient time should be allowed for the ambroid to set before removing feelers. Use ambroid to replace dust cover. Centering of cone for "type 2" loudspeaker differs only in that it is not necessary to cut free the centering diaphragm, adjustment being made in the usual manner by means of screws on the adjustable cone centering ring.

Precautionary Lead Dress.—(1) Keep leads to a-c switch dressed away from antenna coil and trimmer C2. (2) Keep all filament leads twisted. (3) Dress shield lead from term. E of 2nd i-f transformer to term. board against side of chassis and away from 6L7 socket. (4) Dress shielded lead from 6N7 socket to volume control against side of chassis and away from 6L7 socket. (5) Shielded lead from phono. term. board to volume control must be dressed under bus connected between 6L7 and term. A of first i-f transformer. (6) Keep leads of C21 as short as possible. (7) Yellow lead from 6J7 oscillator cathode to dummy terminal on 6L7 socket must be dressed away from chassis base and from brown filament lead. (8) All molded capacitors should be dressed so that flat side is perpendicular to chassis base. (9) Yellow lead from cathode of 6J7 socket to term. 22 of S2 must be dressed under spaghetti on 6J7 socket jumper and pulled tight away from chassis. The following bus leads should be kept as short as possible and, when necessary, replaced only with wire having same diameter as original: (10) Lead from L11-L12-L13 to ground lance; (11) Lead from term. 13 of S3 to ground lance; (12) Lead from term. 9 of S3 to L6-L7; (13) Lead from L6 to C8; (14) Lead from C9 to C8; (15) Lead from term. 5 of S1 to ground lance; (16) Lead from L1-L2 to term. 4 of S1; (17) Lead from L1 to C1; (18) Lead from term. 21 of S2 to C19. (19) Keep filament leads dressed away from grid prongs of 6N7. (20) Keep blue and green leads from plate prongs of output tubes twisted their entire length.

Pickup (Model U-107)

An adjustment is provided to compensate for possible reduced sensitivity of the crystal pickup with age. Adjustment requires the use of a 1,000-ohm-per-volt a-c voltmeter (rectifier type, 10-volt range), a 1-meg. resistor, and an RCA Victor Technical Purpose frequency record (Cat. No. 84519-A or 84505-B). Disconnect the green lead from terminal "1" (terminal board marked "1," "2," and "3" located on top right-hand side of chassis), connect the 1-meg. resistor between green lead and terminal "1," connect the voltmeter across loudspeaker voice coil, turn "Phonograph Volume" and "Power-Tone" controls extreme clockwise, turn "Phono-Volume" (radio) control extreme counter-clockwise, and adjust R114 ("Pickup Voltage Adjuster," mounted under right-hand end of motor-board) until either of the above-mentioned frequency records gives a voltage reading of 6.8 volts using 400-cycle section of record. R114 should also be adjusted if pickup is replaced.

POWER SUPPLY RATINGS

Model U-105	Radio only	Total
A-6...105-125 volts, 60 cycles	135 watts	165 watts
A.....105-125 volts, 50-60 cycles	135 watts	165 watts
B-2...105-125 volts, 25 cycles	135 watts	165 watts
C-6...105-130/140-160/200-250 volts, 60 cycles	135 watts	165 watts
C.....105-130/140-160/200-250 volts, 50-60 cycles	135 watts	165 watts

Model U-107	Radio only	Total
A-6...105-125 volts, 60 cycles	135 watts	165 watts
A-5...105-125 volts, 50 cycles	135 watts	170 watts
B-2...105-125 volts, 25 cycles	135 watts	165 watts
C-6...105-130/140-160/200-250 volts, 60 cycles	135 watts	165 watts
C-5...105-130/140-160/200-250 volts, 50 cycles	135 watts	170 watts

POWER OUTPUT	
Undistorted	10 watts
Maximum	12.5 watts

LOUDSPEAKER	
Type	Electrodynamic
Impedance (v.c.)	11.5 ohms at 400 cycles

PHONOGRAPH	Model U-105	Model U-107
Type	Automatic-Manual	Automatic-Manual
Record Capacity	Eight 10-inch	Eight 10-inch or Seven 12-inch
Turntable Speed	78 R.P.M.	78 R.P.M.
Type of Pickup	High-impedance magnetic	Crystal
Pickup Impedance	1,400 ohms at 1,000 cycles	80,000 ohms at 1,000 cycles

Mechanical Specifications

	Model U-105	Model U-107
Height	34 inches	43 inches
Width	36¾ inches	31⅛ inches
Depth	15⅞ inches	19⅞ inches
Weight (net)	96 pounds	136 pounds
Weight (shipping)	122 pounds	199 pounds
Chassis Base Dimensions	14⅞ inches x 9¾ inches x 3¼ inches	
Over-all Chassis Height	9¾ inches	

OPERATING CONTROLS

Radio Panel.....(1) Tone—Power (switch), (2) Tuning (large inner knob), (3) Range Selector (small outer knob, left to right "A," "B," "C"), (4) Phono.—Volume (radio).

Phono. Compartment. (U-105)..... (1) Turntable Switch, (2) Index Lever, (3) Record Ejector, (4) Phono. Volume
(U-107).....(1) Turntable Switch, (2) Index Lever, (3) Phono. Volume

Tuning Drive Ratio..... 20 to 1

Pilot Lamps
(4) Radio..... Mazda No. 46, 6.3 volts, 0.25 amp.
(1) Front Cabinet (U-105 only)..... Mazda No. 40, 6.3 volts, 0.15 amp.
(1) Phono. Compartment (U-107 only)..... Mazda No. 40, 6.3 volts, 0.15 amp.

©John F. Rider, Publisher

RCA MFG. CO., INC.

MODEL U105
Chassis Wiring
Coils

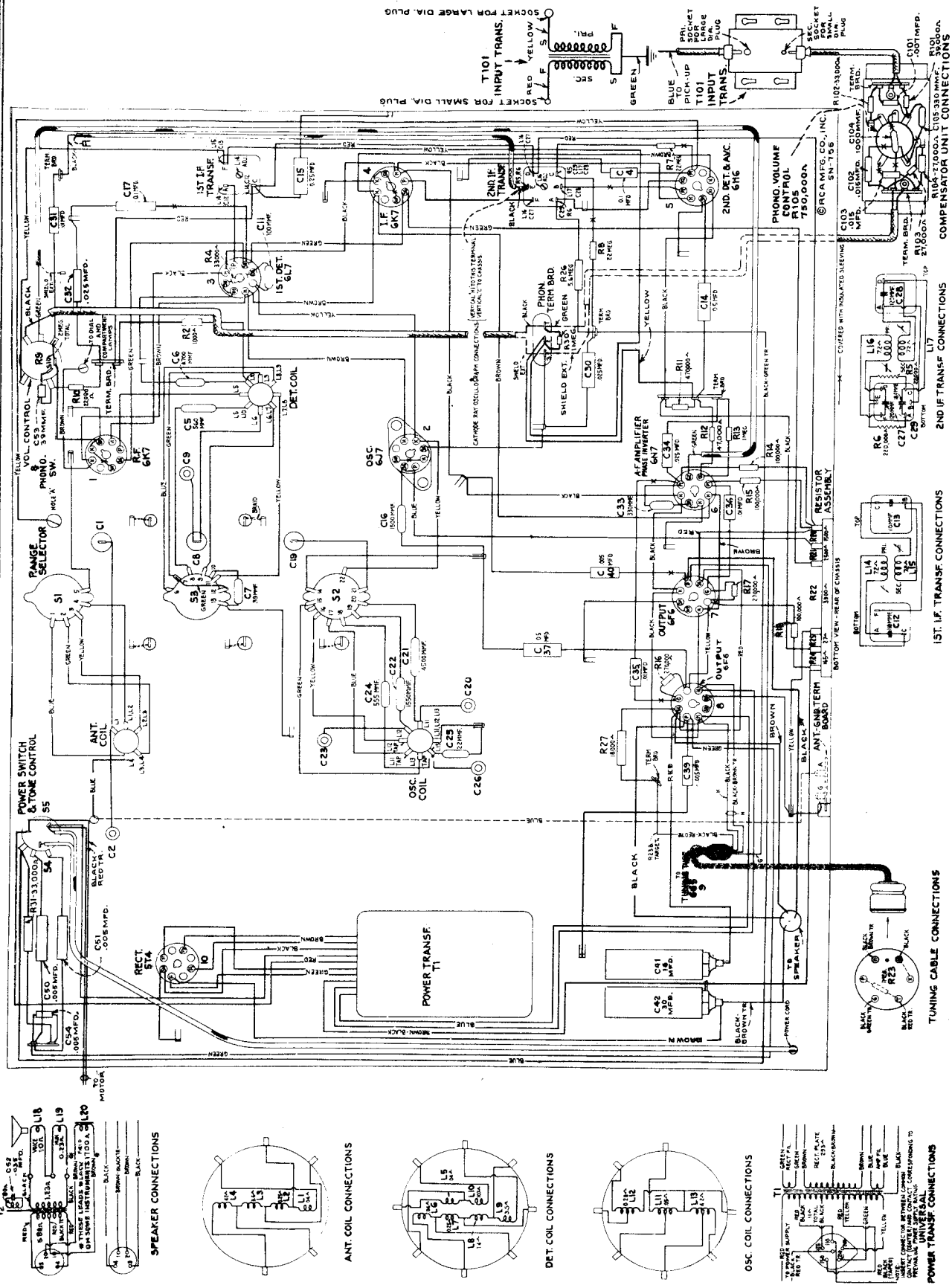

Figure 2—Chassis Wiring Diagram (Model U-106)

©John F. Rider, Publisher

MODEL U105
Automatic Record Changer

RCA MFG. CO., INC.

Details, Adjustments

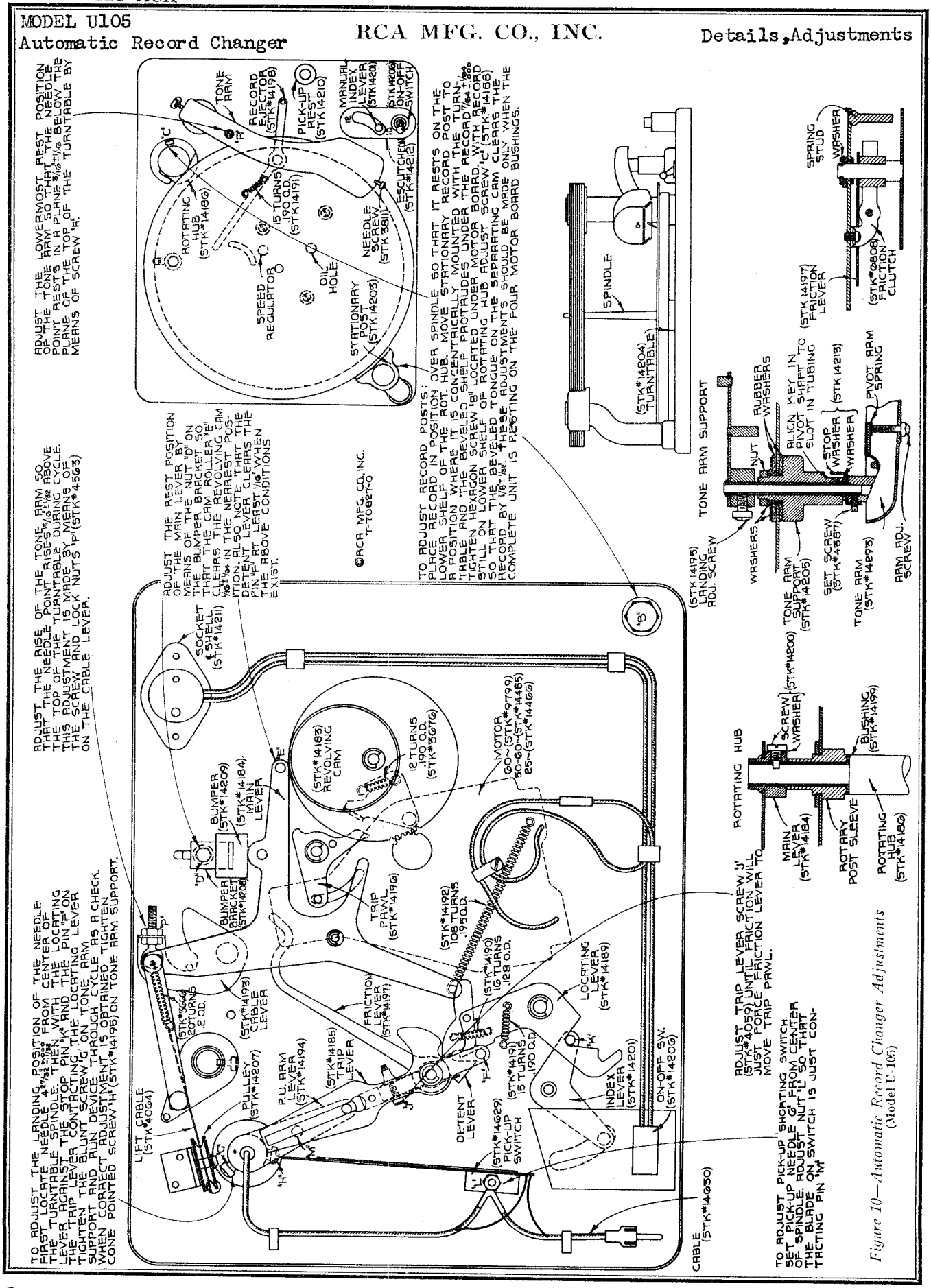

Figure 10—Automatic Record Changer Adjustments (Model U-105)

©John F. Rider, Publisher

RCA MFG. CO., INC.

MODEL U107
Chassis Wiring
Coils

FOR AUTOMATIC RECORD
CHANGER DATA, SEE INDEX

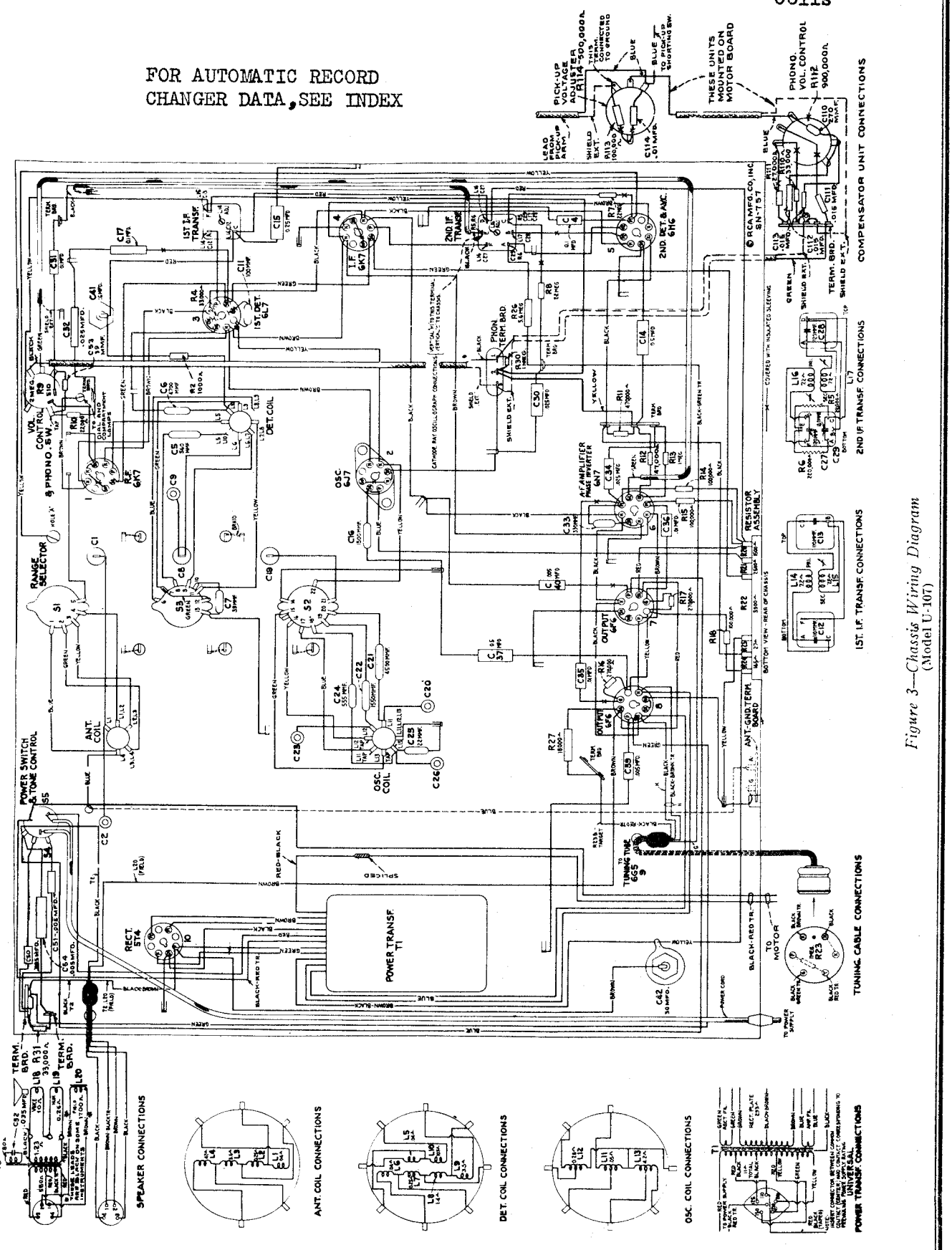

Figure 3—Chassis Wiring Diagram
(Model U-107)

©John F. Rider, Publisher

MODELS U105,U107
Socket,Trimmers

RCA MFG. CO., INC.

Voltage,Pick-up
Phono.Motor

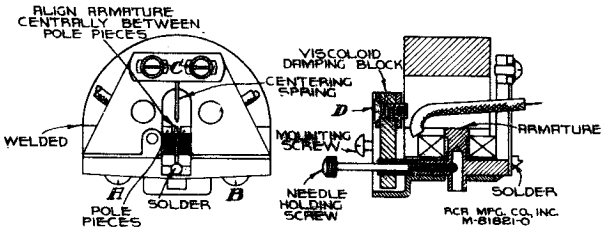

Figure 5—Details of Pickup
(Model U-105)

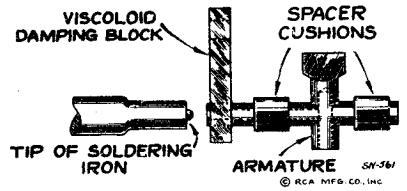

Figure 7—Special Soldering-Iron Tip

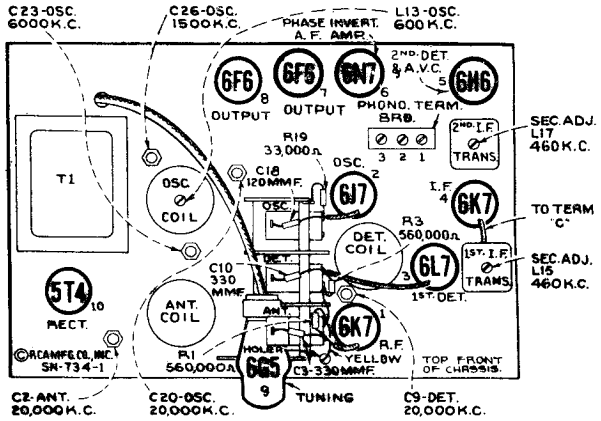

Figure 6—Radiotron, Coil, and Trimmer Locations

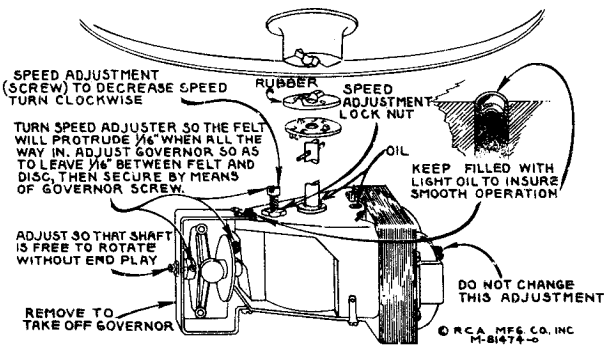

Figure 8—Details of Motor
(Model U-105)

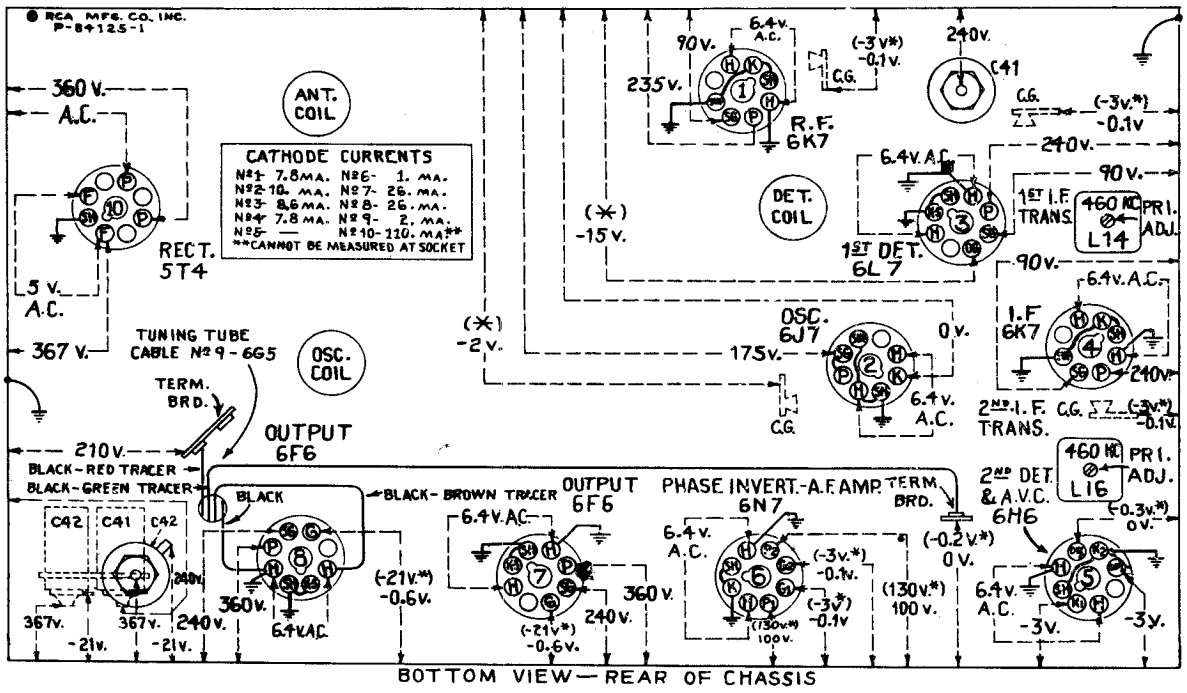

Figure 9—Radiotron Socket Voltages, Coil, and Trimmer Locations

Measured at 115 volts, 60-cycle supply—Tuned to approximately 1,000 kc ("Broadcast")—
•No signal being received—Volume control minimum

Note: Two voltage values are shown for some readings. The value shown in parentheses with asterisk (*) indicates operating conditions without voltmeter loading. The other value (generally lower) is the actual measured voltage and differs from the value shown in parentheses because of the additional loading of the voltmeter through the high series circuit resistance.

Voltage values as specified should hold within ±20% when the receiver is normally operative at its rated line voltage. To duplicate the conditions under which the voltages were measured requires a 1,000-ohm-per-volt d-c meter, having ranges of 10, 50, 250 and 500 volts. Use the nearest range above the specified measured voltage. A-c voltages were measured with a corresponding a-c meter.

©John F. Rider, Publisher

Pickup (Model U-105)

The pickup used in the phonograph unit is of an improved design. The horseshoe magnet is rigidly welded to the pole pieces and is irremovable. There is a centering spring attached to the armature to maintain proper adjustment and to provide a limiting effect on the movement of the armature. The frequency response is substantially uniform over a wide range. Service operations which may be necessary on the pickup are as follows:

Centering Armature.—Refer to figure 5 showing the pickup inner structure. The armature is shown in its proper relation to the magnet pole pieces, i. e., exactly centered. Whenever this centering adjustment has been disturbed it will be necessary to remove the pickup mechanism from the tone arm by removing the needle holding screw and the two mounting screws from the front of the tone arm, holding the pickup assembly to keep it from dropping. Unsolder the two leads from the lugs on the terminal board at the rear of the pickup. Insert a small rod or nail into the armature needle hole and replace the needle holding screw, tightening it to hold the rod securely. If the armature clamping screws A and B have not been disturbed, screws C should be loosened which will permit the armature to be moved from side to side, the rod acting as a lever to perform this operation. The proper adjustment is obtained when the armature is moved to the extreme position on each side (the movement being limited by the armature striking the pole pieces) and then brought to the mid position between these two extremes. Screws C should then be tightened. The armature position should then be central between the pole pieces and at right angles to them. With a little practice, the correct adjustment of the armature will be obtained. The air gap between the pole pieces and the armature should be kept free from dust, filings, and other foreign material which would obstruct the movement of the pickup armature.

Damping Block.—The viscoloid damping block which is attached to the front end of the armature shank serves as a mechanical filter to eliminate undesirable resonances and to cause the frequency response to be uniform. Should it be necessary to replace this damping block, the pickup mechanism should be removed from the tone arm as explained above. Remove screw D and the damping block from the pickup assembly. Make sure that the shaft of the armature which contacts the viscoloid is clean. Then insert the new damping block so that it occupies the same position as that of the original block, and is in correct vertical alignment with the armature. The hole in the block is somewhat smaller than the diameter of the armature in order to permit a snug fit. With the damping block properly aligned on the armature, screw D with its washer should then be replaced. Heat should be applied to the armature (viscoloid side) so that the damping block will fuse at the point of contact and become rigidly attached to the armature. A special-tip soldering iron, constructed as shown in figure 7 will be found very useful in performing this operation. The iron should be applied only long enough to slightly melt the block, causing a small bulge on both sides.

Replacing Coil.—Whenever there is defective operation due to an open or shorted pickup coil, this coil should be replaced. Remove the pickup mechanism and terminal board as described above. Remove screws A and B and the magnet assembly. Remove the bakelite coil support (with coil attached) and insert the new coil support assembly in its place, after which replace the magnet assembly and center the armature as described above, then re-assemble the remainder of the unit.

Automatic Record Mechanism

(Model U-105)

This record changing mechanism is designed to be simple and fool-proof. Certain adjustments may be required occasionally. The adjustments are illustrated and explained in figures 8 and 10.

It is important, when servicing the automatic mechanism, to have it placed on a level support. It is also important to refrain from forcing the mechanism if there is a tendency to bind or jam, since bent levers and possible broken parts may result.

CAUTION.—Do not leave records stacked on the record holder posts, when not in use, as they are liable to warp, particularly so in warm climates.

FOR RECORD CHANGER DATA, SEE MODEL U106

Alignment Procedure

Calibrate the tuning dial by adjusting main dial pointer to the low-frequency (end) calibration mark on dial with the gang tuning-condenser plates in full-mesh position; then adjust the small (vernier) pointer to "0." These are friction adjustments.

Perform alignment in proper order, tabulated below, starting with No. 1 and following all operations across, then No. 2, etc. Adjustment locations are shown on figures 6 and 9.

Cathode-ray alignment is highly preferable; the connections to the chassis are shown on figures 2 and 3. If an output indicator is used, connect it across the loudspeaker voice-coil and advance the receiver volume control to full-volume position.

Connect the "low" output terminal of the test oscillator to the receiver "G" (ground) terminal for all alignment operations. Regulate the output of the test oscillator so that minimum signal is applied to the receiver to obtain an observable output indication. This will avoid a-v-c action.

The term "Dummy antenna" means the device which must be connected between the "high" test-oscillator output and the point of connection to the receiver in order to obtain ideal alignment. "No signal, 550-750 kc" means that the receiver should be tuned to a point between 550 and 750 kc where no signal or interference is received from a station or local (heterodyne) oscillator.

Order of Alignment	Test Oscillator			Range Selector	Receiver Dial Setting	Circuit to Adjust	Adjustment Symbols	Adjust to Obtain
	Connection to Receiver	Dummy Antenna	Frequency Setting					
1	6K7 I-F Grid Cap	.001 Mfd.	460 kc	"A" Left	No Signal 550-750 kc	2nd I-F Trans.	L16 and L17	Max. (peak)
2	6L7 Det. Grid Cap	.001 Mfd.	460 kc	"A"	No Signal 550-750 kc	1st I-F Trans.	L14 and L15	Max. (peak)
3	Ant. Term.	300 Ohms	20,000 kc	"C" Right	20,000 kc	"C" Osc.	C20	Max. (peak) *
4	Ant. Term.	300 Ohms	20,000 kc	"C"	20,000 kc	"C" Det.	C9	Max. (peak) †
5	Ant. Term.	300 Ohms	20,000 kc	"C"	20,000 kc	"C" Ant.	C2	Max. (peak) ‡
6	Ant. Term.	300 Ohms	6,000 kc	"B" Center	6,000 kc	"B" Osc.	C23	Max. (peak) *
7	Ant. Term.	200 Mmfd.	600 kc	"A" Left	600 kc	"A" L-F Osc.	L13	Max. (peak)
8	Ant. Term.	200 Mmfd.	1,500 kc	"A"	1,500 kc	"A" H-F Osc.	C26	Max. (peak)
9	Ant. Term.	200 Mmfd.	600 kc	"A"	600 kc	"A" L-F Osc.	L13	Max. (peak)
10	Ant. Term.	200 Mmfd.	1,500 kc	"A"	1,500 kc	"A" H-F Osc.	C26	Max. (peak)

† Use maximum capacity peak if two peaks can be obtained. * Use minimum capacity peak if two peaks can be obtained.
‡ After this adjustment, check for image signal by shifting receiver dial to 19,080 kc.

©John F. Rider, Publisher

STOCK No.	DESCRIPTION
	RECEIVER ASSEMBLIES
12038	Band—Rubber band for tuning tube
14384	Belt—Variable condenser drive belt
14618	Board—Antenna and ground terminal board (Model U-105 only)
14517	Board—Antenna and ground terminal board (Model U-107 only)
12717	Board—Phonograph terminal board
14338	Bushing—Variable condenser mounting bushing assembly
14624	Cable—Band indicator cable, approximately 6½ in. long
14523	Cable—Tone control indicator cable, approximately 3 in. long
14394	Cable—Tuning tube cable and socket
11350	Cap—Grid contact cap
12607	Cap—First I.F. transformer shield top
12581	Cap—Second I.F. transformer shield top
12884	Capacitor—Adjustable trimmer (long) (C2, C23, C26)
12714	Capacitor—Adjustable trimmer (medium) (C9, C20)
14021	Capacitor—22 Mmfd. (C25)
13545	Capacitor—39 Mmfd. (C7, C53)
12720	Capacitor—100 Mmfd. (C11)
14262	Capacitor—110 Mmfd. (C12, C15)
12404	Capacitor—120 Mmfd. (C27, C28)
12724	Capacitor—120 Mmfd. (C18)
12406	Capacitor—180 Mmfd. (C29)
12952	Capacitor—330 Mmfd. (C3, C10, C33)
12727	Capacitor—555 Mmfd. (C24)
12537	Capacitor—560 Mmfd. (C5)
12898	Capacitor—1,500 Mmfd. (C16)
12729	Capacitor—1,550 Mmfd. (C22)
12728	Capacitor—4,500 Mmfd. (C21)
12897	Capacitor—4,700 Mmfd. (C6)
4838	Capacitor—.005 Mfd. (C39, C40, C50, C51, C54)
13138	Capacitor—.01 Mfd. (C31, C35, C36)
4870	Capacitor—.025 Mfd. (C30, C32, C34)
4841	Capacitor—0.1 Mfd. (C4, C17)
5170	Capacitor—0.25 Mfd. (C19)
12741	Capacitor—0.5 Mfd. (C14, C37)
5212	Capacitor—16 Mfd. (C41)
14531	Capacitor—25 Mfd. (C42)
14372	Coil—Antenna coil and shield (L1, L2, L3, L4)
14516	Coil—Oscillator coil and shield (L11, L12, L13)
14414	Coil—R.F. coil and shield (L5, L6, L7, L8, L9, L10)
14513	Condenser—3-gang variable condenser (C1, C8, C19)
14783	Connector—2-contact female connector for compartment lamp cable or motor power cable
5040	Connector—4-contact female connector for reproducer cable
12006	Core—Adjustable core and stud for transformer, Stock Nos. 14376 and 14283
12800	Core—Adjustable core and stud for coil, Stock No. 14516
14596	Dial—Station selector dial scale, complete with tuning tube escutcheon (Model U-105 only)
14518	Dial—Station selector dial scale, complete with tuning tube escutcheon (Model U-107 only)
14514	Drive—Variable condenser vernier drive pinion gear and shaft
14345	Drum—Variable condenser drive belt drum, complete with set screws
14387	Escutcheon—Tuning tube escutcheon
11982	Fastener—Dial scale fastener
30085	Gear—Indicator drive gear and hub, and pointer stem and gear
14341	Idler—Station selector drive belt idler
14519	Indicator—Station selector indicator pointer
14520	Indicator—Vernier indicator pointer
5226	Lamp—Dial or pilot lamp
14028	Nut—Jamb nut for adjustable trimmer capacitor, Stock Nos. 12714 and 12884
12471	Plate—6J7 Radiotron socket mounting plate and rubber cushions—less socket, Stock No. 11196
14340	Pulley—Station selector drive belt pulley and knob shaft
14598	Reflector—Dial reflector and bracket, complete with dial lamp bracket, tuning tube bracket, and tone and band indicators
5112	Resistor—1,000 ohms, carbon type, ½ watt (R2)
14078	Resistor—18,000 ohms, carbon type, 1 watt (R27)
14284	Resistor—22,000 ohms, carbon type, 1/10 watt (R5)
11305	Resistor—22,000 ohms, carbon type, ½ watt (R10)
11300	Resistor—33,000 ohms, carbon type, 1/10 watt (R19)
13735	Resistor—33,000 ohms, carbon type, ½ watt (R4)
5033	Resistor—33,000 ohms, carbon type, 1 watt (R31)
11646	Resistor—47,000 ohms, carbon type, ½ watt (R12)
5145	Resistor—100,000 ohms, carbon type, ½ watt (R14, R15, R18)
11398	Resistor—220,000 ohms, carbon type, 1/10 watt (R6)
11453	Resistor—270,000 ohms, carbon type, 1/10 watt (R16, R17)
11172	Resistor—470,000 ohms, carbon type, ½ watt (R11)
11397	Resistor—560,000 ohms, carbon type, 1/10 watt (R1, R3)
12013	Resistor—1 megohm, carbon type, 1/10 watt (R23, R30)
13730	Resistor—1 megohm, carbon type, ½ watt (R13)
11626	Resistor—2.2 megohms, carbon type, ½ watt (R7, R8)
11668	Resistor—5.6 megohms, carbon type, ½ watt (R26)
14532	Resistor—Voltage divider—comprising one 1,500-ohm, one 2,500-ohm, one 3,900-ohm, one 27-ohm, and one 165-ohm sections (R20, R21, R22, R24, R25)
14343	Retainer—Station selector knob shaft and pulley retainer
14350	Screw—No. 8-32 x 3/16 square head set screw for drum, Stock No. 14345, and gear, Stock No. 30085
14374	Shield—Antenna or R.F. coil shield
14375	Shield—Oscillator coil shield
12008	Shield—First or second I.F. transformer shield
14114	Socket—Dial lamp socket
14171	Socket—Pilot lamp socket
11195	Socket—5-contact 5T4 Radiotron socket
11488	Socket—2-contact female for compartment lamp cable—Model U-107
11196	Socket—8-contact 6F6, 6H6, 6K7, 6L7, 6N7, or 6J7 Radiotron socket
12907	Spring—Tension spring for indicator gear, Stock No. 30085
14342	Spring—Tension spring for idler, Stock No. 14341
12007	Spring—Retaining spring for core, Stock Nos. 12006 and 12800
14599	Switch—High-frequency tone and power switch (S4, S5)
14515	Switch—Range switch (S1, S2, S3)
14376	Transformer—First I.F. transformer (L14, L15, C12, C13)
14283	Transformer—Second I.F. transformer (L16, L17, C27, C28, C29, R5, R6)
11211	Transformer—Power transformer, 105-125 volts, 50-60 cycles (T1)
11212	Transformer—Power transformer, 105-125 volts, 25-60 cycles (T1)
11213	Transformer—Power transformer, 105-250 volts, 50-60 cycles (T1)
14597	Volume Control—Radio volume control and Radio-Record switch (R9, S10)
14379	Washer—Felt washer for indicator pointer
	REPRODUCER ASSEMBLIES (Speaker RL76-1)
14606	Cap—Dust cap for cone center
14603	Coil—Field coil (L20)
14604	Coil—Hum neutralizing coil (L19)
14602	Cone—Reproducer cone and dust cap (L18)
5039	Plug—4-contact male plug for reproducer
14600	Reproducer—Reproducer, complete
14358	Screw—Screw, washer, and lockwasher to hold core in yoke
14601	Transformer—Output transformer (T2, C52)
14357	Washer—Spring washer to hold field coil
	OPERATING MECHANISM ASSEMBLIES (Model U-105 only)
14199	Bushing—Record separator rotating shaft bushing
14183	Cam—Cam and gear assembly
6808	Clutch—Trip lever friction clutch
14197	Finger—Friction finger assembly
14186	Hub—Rotating hub and record separator, complete with set screw
14189	Lever—Locating lever assembly
14184	Lever—Main lever and link assembly
14201	Lever—Manual index lever assembly
14193	Lever—Pickup lift cable lever
14194	Lever—Pickup arm lever, complete with set screws
14198	Lever—Reject lever assembly
14185	Lever—Trip lever and friction clutch assembly
14196	Pawl—Trip pawl assembly
1563	Screw—Cable lever screw and two lockNuts
14200	Screw—No. 8-32 special hex-head screw and lockwasher for record separator shaft mounting
4059	Screw—Trip lever clutch tension adjustment screw
14188	Screw—No. 10-32 x 7/16 fillister-head, cone-pointed set screw for rotating hub
14195	Screw—No. 10-32 x 5/16 fillister-head, cone-pointed set screw for pickup arm lever
14187	Shaft—Rotating shaft for record separator
3676	Spring—Cam pawl tension spring
3666	Spring—Lift cable tension spring
14190	Spring—Locating lever pawl tension spring
14191	Spring—Locating lever reject lever tension spring
14192	Spring—Main lever tension spring
	OPERATING MECHANISM ASSEMBLIES (Model U-107 only)
14754	Cam—Cam and gear assembly
6808	Clutch—Trip lever friction clutch
14756	Cover—Metal cover for trip lever and friction finger assembly
6809	Finger—Manual index lever finger assembly
3670	Finger—Friction finger assembly
11554	Lever—Manual index lever—less pin
14755	Lever—Main lever and link assembly
14914	Lever—Pickup lift cable lever
11555	Lever—Trip lever and friction clutch assembly
6503	Pawl—Trip pawl assembly
3672	Pin—Manual index lever pin
13685	Plate—Eject arm actuating plate assembly
4564	Screw—Manual index lever finger set screw
4059	Screw—Trip lever clutch tension adjustment screw
4586	Screw—Special screw used to fasten main lever and link assembly bushing
13637	Spacer—Pickup arm mounting spacer
13638	Spring—Actuating spring
4565	Spring—Manual index lever finger tension spring
4061	Spring—Main spring lever tension spring or pickup arm cable tension spring
2893	Spring—Trip lever latch plate tension spring
3676	Spring—Cam and gear pawl tension spring
14916	Spring—Pickup lift lever spring
4125	Spring—Eject arm horizontal action tension spring
13636	Stud—Pickup arm lift cable stud and nut
2917	Washer—Spring washer—"U" type

STOCK No.	DESCRIPTION
	EJECT ARM ASSEMBLIES (Model U-107 only)
14753	Arm—Eject arm, complete
11533	Ball—1/16-in.-diameter steel ball
10129	Ball—3/16-in.-diameter steel ball
11529	Bearing—Ejector tip bearing and nut
11538	Bracket—Eject arm bracket
11537	Collar—Eject arm shaft collar and set screw
11536	Cushion—Counter balance roller cushion—located inside of eject arm
4055	Post—Vertical adjustment post—located on eject arm bracket
3729	Roller—Eject arm counter balance roller—located inside of eject arm
4580	Screw—No. 6-32 x 3/16-in. square-head set screw for eject arm collar
11534	Screw—No. 8-36 x 7/32-in. special screw for eject arm tip center adjustment
11535	Shaft and Collar—Eject arm vertical action shaft and collar assembly
11528	Silencer—Ejector tip silencer
4067	Spring—Ejector arm bracket spring
11531	Spring—Ejector tip spring
11530	Tip—Ejector tip with tip center, adjusting screw and cap
11539	Yoke—Eject arm yoke assembly
	PICKUP AND ARM ASSEMBLIES (Model U-105 only)
14291	Armature—Pickup armature assembly
4064	Cable—Pickup lift cable
14672	Coil—Pickup coil (L101)
14292	Damper—Pickup damper block, complete with clamp and screw
14293	Pickup and Arm, complete
3811	Screw—Needle holding screw
4387	Screw—No. 6-32 x ¼-in. headless set screw for pickup arm pivot shaft
	PICKUP AND ARM ASSEMBLIES (Model U-107 only)
10941	Ball—Steel ball for pivot shaft bearing
3204	Cable—Pickup lift cable
30101	Cable—Shielded pickup cable—connects pickup unit to shorting switch
12850	Damper—Pickup arm pivot shaft damper—comprising one upper rubber damper and bearing, one lower rubber damper and one lower bearing
14820	Mechanism—Pickup mechanism, complete with needle screw
14818	Pickup and Arm, complete
12546	Plug—Pivot shaft bearing plug
14823	Rod—Pickup arm brake trip rod
14822	Screw—Needle screw
14824	Screw—Pickup mechanism terminal screw
14913	Spring—Pickup arm tension spring
14821	Support—Pickup mechanism support
	MOTOR ASSEMBLIES (Model U-105 only)
14215	Governor—Governor, complete for motor, Stock Nos. 9799 and 14465
14465	Motor—105-125 volts, 50-60 cycles (M-101)
9799	Motor—105-125 volts, 60 cycles (M-101)
14214	Screw—Motor mounting screw and spacer assembly
	MOTOR ASSEMBLIES (Model U-107 only)
9735	Motor—105-125 volts, 25 cycles (M-110)
9651	Motor—105-125 volts, 50 cycles (M-110)
9650	Motor—105-125 volts, 60 cycles (M-110)
12050	Suspension Spring—Motor mounting spring, washer, and stud assembly—comprising six springs, six cup washers, three spring washers, and three studs
	AUTOMATIC SWITCH ASSEMBLIES (Model U-107 only)
3994	Cover—Motor switch cover
10184	Plate—Automatic brake latch plate
10174	Springs—Automatic brake springs
6806	Switch Assembly—Automatic switch, complete
3322	Switch—Motor switch (S111)
	MOTOR BOARD ASSEMBLIES (Model U-105 only)
14208	Bracket—Bumper bracket and bumper, complete
14209	Bumper—Rubber bumper
14830	Cable—Shielded cable, 22 inches long, complete with single contact male connector—connects pickup shorting switch to input transformer or compensator
11704	Damper—Turntable damper and damper plate
14212	Escutcheon—Manual index lever and switch escutcheon
14203	Post—Record post—located on front left-hand corner of motor board
14210	Rest—Pickup arm rest
14207	Roller—Pickup lift cable roller and bracket
14211	Socket—Motor board socket and shell
14205	Support—Pickup arm mounting spacer, washers, and nut
14206	Switch—Motor toggle switch (S101)
14629	Switch—Pickup shorting switch (S102)
14204	Turntable, complete
14213	Washer—Pickup arm stop washer and spacing washer
	MOTOR BOARD ASSEMBLIES (Model U-107 only)
11881	Base—Phonograph compartment lamp socket and base
14760	Cup—Used-needle cup
12051	Capacitor—2 Mfd., complete with 2-contact male connector for use with motor, Stock Nos. 9650 or 9651 only (C115)
13101	Capacitor—4 Mfd., complete with 2-contact male connector for use with motor, Stock No. 9735 only (C115)
4674	Connector—2-contact male connector for Stock Nos. 12051, 13101 or phono. compartment lamp leads
4577	Connector—2-contact male connector for motor cable
11488	Connector—2-contact female connector for motor leads
14782	Damper—Turntable damper
11553	Escutcheon—Index escutcheon engraved "Manual — 12 — 10"
14688	Knob—Needle rest knob
4340	Lamp—Phonograph compartment lamp — 6.3 volts
3764	Nut—Cap nut for motor board suspension assembly
30565	Resistor—500 ohms, 6 watts, for use with motor, Stock No. 9735 only (R116)
14761	Rest—Pickup rest
14825	Roller—Pickup arm cable guide roller—comprising bracket, roller, and guide pin
11711	Shade—Phonograph compartment lamp shade
14758	Spacer—Pickup arm mounting spacer
14270	Spring—Retaining spring for knob, Stock No. 14758
4565	Spring—Tension spring for needle rest
3763	Suspension Spring—Suspension spring, washer, and bolt assembly for motor board—comprising one bolt, two cup washers, two springs, two "C" washers, and one cap nut
4671	Switch—Operating switch, toggle type (S112)
30157	Switch—Pickup shorting switch (S110)
14759	Turntable, complete
	MISCELLANEOUS ASSEMBLIES (Model U-105 only)
4391	Box—Used-needle box
14607	Cable—Shielded compensation cable, complete with male plug
13103	Cap—Pilot lamp cap
12952	Capacitor—330 Mmfd. (C105)
12635	Capacitor—1,000 Mmfd. (C104)
5148	Capacitor—.007 Mfd. (C101)
11315	Capacitor—.015 Mfd. (C102, C103)
14610	Escutcheon—Station selector escutcheon and crystal, complete with tone and band indicating strips
14611	Index—Tone control indicating strip—mounts in station selector escutcheon
14529	Index—Band indicating strip—mounts in station selector escutcheon
14359	Knob—Station selector knob
14269	Knob—Volume control, tone control, or range switch knob
11607	Receptacle—New-needle card holder
11400	Resistor—27,000 ohms, carbon type, ½ watt (R103, R104)
13735	Resistor—33,000 ohms, carbon type, ½ watt (R102)
11322	Resistor—39,000 ohms, carbon type, ½ watt (R101)
4580	Screw—Chassis mounting screw and washer assembly
4982	Spring—Retaining spring for knob, Stock No. 14359
14270	Spring—Retaining spring for knob, Stock No. 14269
3763	Suspension Spring—Motor board suspension springs, stud, washer, and nut assembly
14609	Transformer—Phonograph input transformer (T101)
14608	Volume Control—Phonograph volume control (R105)
	MISCELLANEOUS ASSEMBLIES (Model U-107 only)
12488	Capacitor—270 Mmfd. (C110)
13762	Capacitor—1,500 Mmfd. (C111) in 25 cycle model only
14383	Capacitor—.01 Mfd. (C114)
11315	Capacitor—.015 Mfd. (C111, C112, C113)—C111 .015 Mfd. in 50 and 60 cycle models only
30099	Control—Pickup control (R114)
14610	Escutcheon—Station selector escutcheon and crystal
14269	Knob—Radio or phonograph volume control, tone control, or range switch knob
14359	Knob—Station selector knob
14529	Index—Band indicator card—mounts in station selector escutcheon
14611	Index—Tone indicator card—mounts in station selector escutcheon
11607	Receptacle—New-needle card holder
12738	Resistor—27,000 ohms, insulated, ½ watt (R111, R115)—R115 27,000 ohms in 50 cycle model only
12454	Resistor—33,000 ohms, insulated, ½ watt (R110)
12286	Resistor—56,000 ohms—insulated ½ watt (R115) in 25 cycle model only
14580	Resistor—100,000 ohms, insulated, ½ watt (R113)
12210	Screw—Chassis mounting screw and washer assembly
3763	Suspension Spring—Motor board suspension bolt spring washers and nut
30098	Volume Control—Phonograph volume control (R112)

RCA MFG. CO., INC.

©John F. Rider, Publisher

©John F. Rider, Publisher

RCA MFG. CO., INC.

MODEL U106
Schematic
Specifications

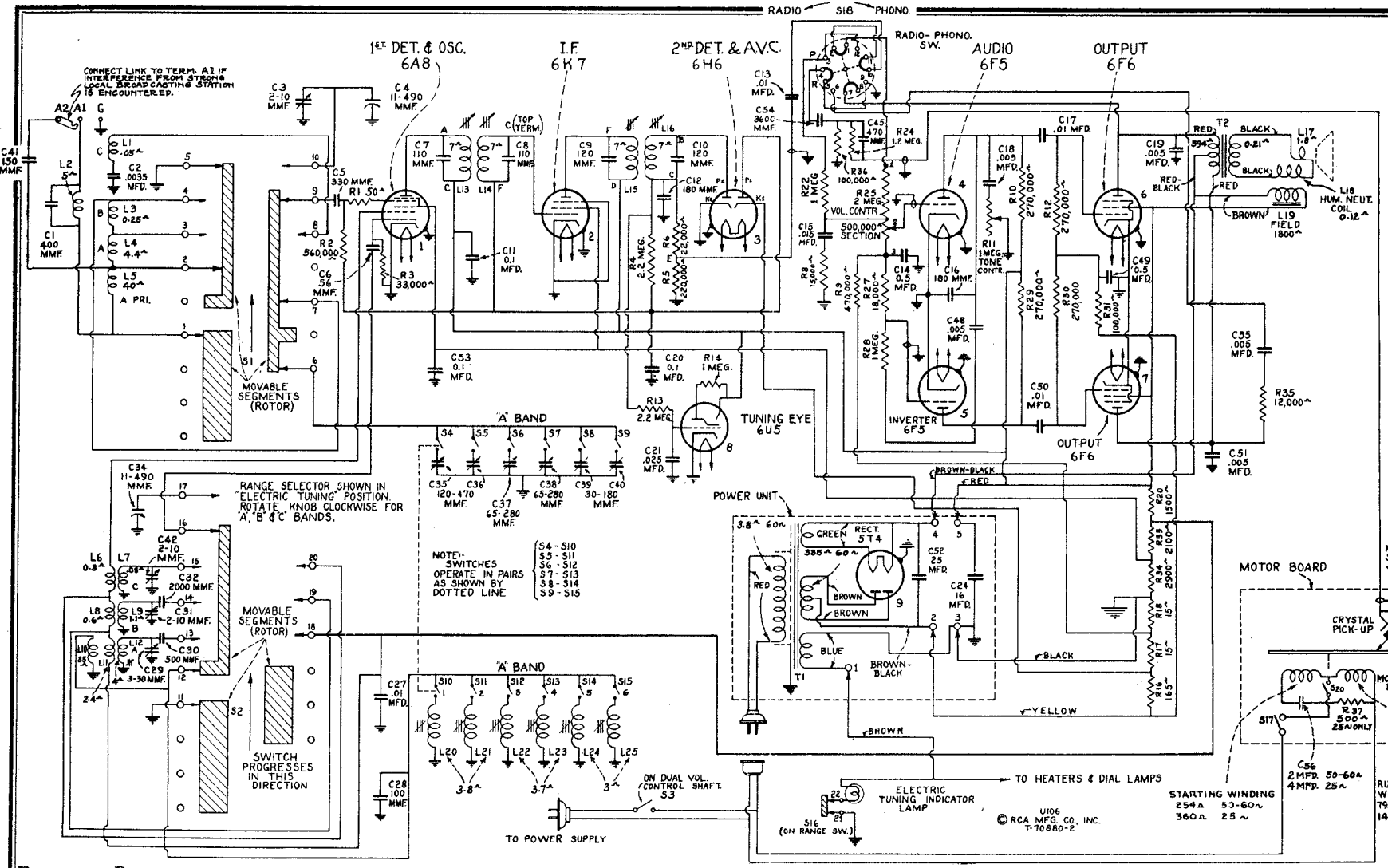

Frequency Ranges

"Standard Broadcast" (A)	540-1,720 kc
"Medium Wave" (B)	2,300-7,500 kc
"Short Wave" (C)	7,500-22,000 kc
Six "Electric Tuning" Positions	540-1,550 kc

Power Supply Ratings

	Radio Only	Total
A-6...105-125 volts, 60 cycles	120 watts	150 watts
A-5...105-125 volts, 50 cycles	125 watts	155 watts
B-2...105-125 volts, 25 cycles	120 watts	150 watts
C-6...105-125/200-250 volts, 60 cycles	120 watts	150 watts
C-5...105-125/200-250 volts, 50 cycles	125 watts	155 watts

R-F Alignment Frequencies

"Medium Wave" (B)	6,000 kc (osc., ant.)
"Short Wave" (C)	20,000 kc (osc.)
"Standard Broadcast" (A)	600 kc (osc.), 1,500 kc (osc.)
Electric Tuning	Desired Station (osc., ant.)

Phonograph

Type	Automatic or Manual
Record Capacity	Eight 10-inch or Seven 12-inch
Turntable Speed	78 R.P.M.
Type of Pickup	Crystal
Pickup Impedance	80,000 ohms at 1,000 cycles

Loudspeaker

Type	Twelve-inch Electrodynamic
Voice Coil Impedance	2.2 ohms at 400 cycles

Power Output

Undistorted	10 watts
Maximum	12 watts

IF PEAK 460 KC

MODEL U106
Chassis Wiring

RCA MFG. CO., INC.

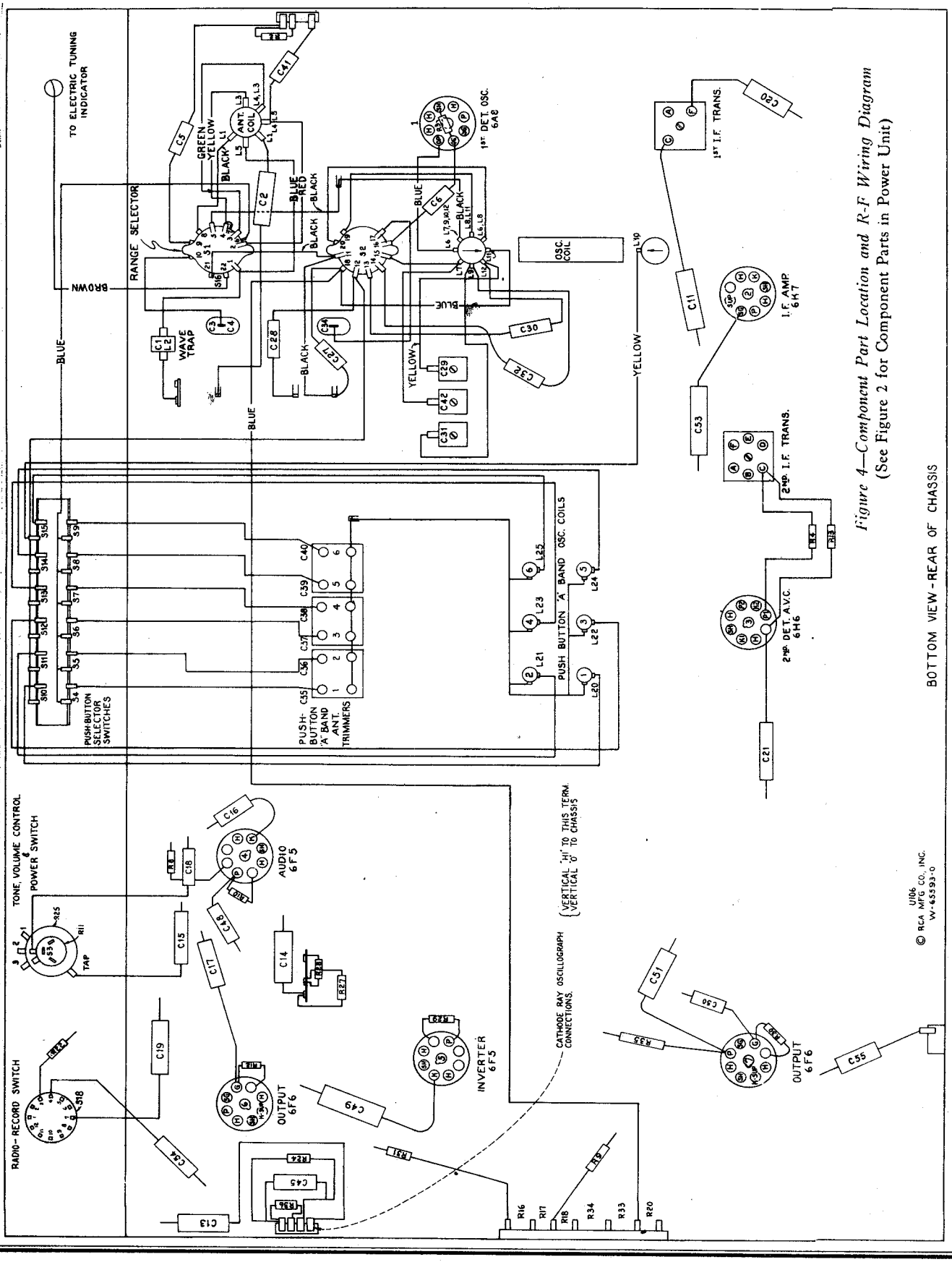

Figure 4—Component Part Location and R-F Wiring Diagram
(See Figure 2 for Component Parts in Power Unit)

©John F. Rider, Publisher

RCA MFG. CO., INC.

MODEL U106
Socket, Trimmers
Chassis Wiring
Circuit Data, Notes

Circuit Arrangement

The circuit consists of a combined first-detector and oscillator stage; i-f amplifier stage; diode-detector and automatic-volume-control stage; a-f amplifier stage; a-f amplifier, phase-inverter stage; push-pull power-amplifier stage; tuning indicator "Magic Eye"; and a full-wave rectifier. The antenna coil is constructed with a special type winding ("qumulative") to provide increased sensitivity and selectivity on the "Standard broadcast" band. A fixed-tuned wave trap reduces i-f interference entering the antenna circuit.

Electric tuning is accomplished in a simple manner. There are six trimmers for tuning the single antenna coil and six magnetite-core adjusted oscillator coils. A desired station is tuned accurately, quickly, and silently by pressing a push-button which instantly puts the pre-adjusted coil and trimmer into use. Oscillator frequency drift is reduced to a minimum by use of a temperature-compensating capacitor (C28) in the oscillator circuit along with magnetite-core adjusted oscillator coils.

Radiotron Cathode Current Readings

Measured with Milliammeter Connected at Tube Socket Cathode Terminals Under Conditions Similar to Those of Voltage Measurements

(1) RCA-6A8—1st Det. and Osc.	11	ma.
(2) RCA-6K7—I-F Amp.	8	ma.
(3) RCA-6H6—2nd Det. and A.V.C.	———	
(4) RCA-6F5—Audio Amplifier	0.29	ma.
(5) RCA-6F5—Inverter	0.29	ma.
(6) RCA-6F6—Output	28.5	ma.
(7) RCA-6F6—Output	28.5	ma.
(8) RCA-6U5—Tuning	1.5	ma.
(9) RCA-5T4—Rectifier	110	ma.**

(** Cannot be measured at socket)

Service Data

Loudspeaker.—Centering the loudspeaker voice-coil is made in the usual manner with three, narrow, paper or celluloid feelers after first removing the front dust-cover. This may be removed by softening its cement with a light application of acetone, using care not to allow the acetone to flow into the air gap. The dust-cover should be cemented back in place with ambroid upon completion of the adjustment.

Precautionary Lead Dress.—(1) Filament leads should be dressed away from audio grids. (2) Output plate leads should be dressed away from radio-phonograph switch. Maintain original size, length, and position of: (3) All leads from range switch to antenna and oscillator coils. They should be as short, rigid, and separated as far as possible from other leads and chassis. (4) Lead from oscillator coil to ground. (5) Leads from gang condenser to range selector. (6) Leads of "C" band antenna series condenser, C2. If the r-f and i-f wiring is altered during servicing the receiver must be re-aligned.

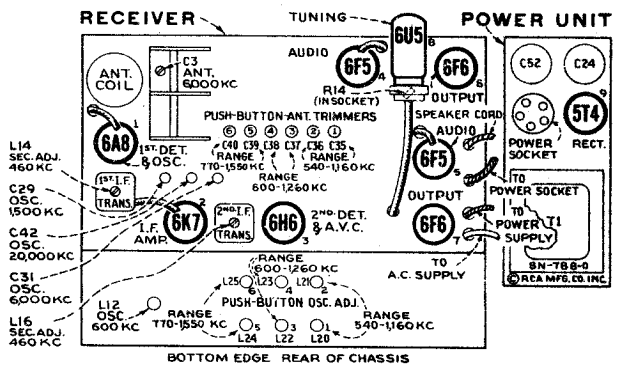

Figure 1—Radiotron and Trimmer Locations

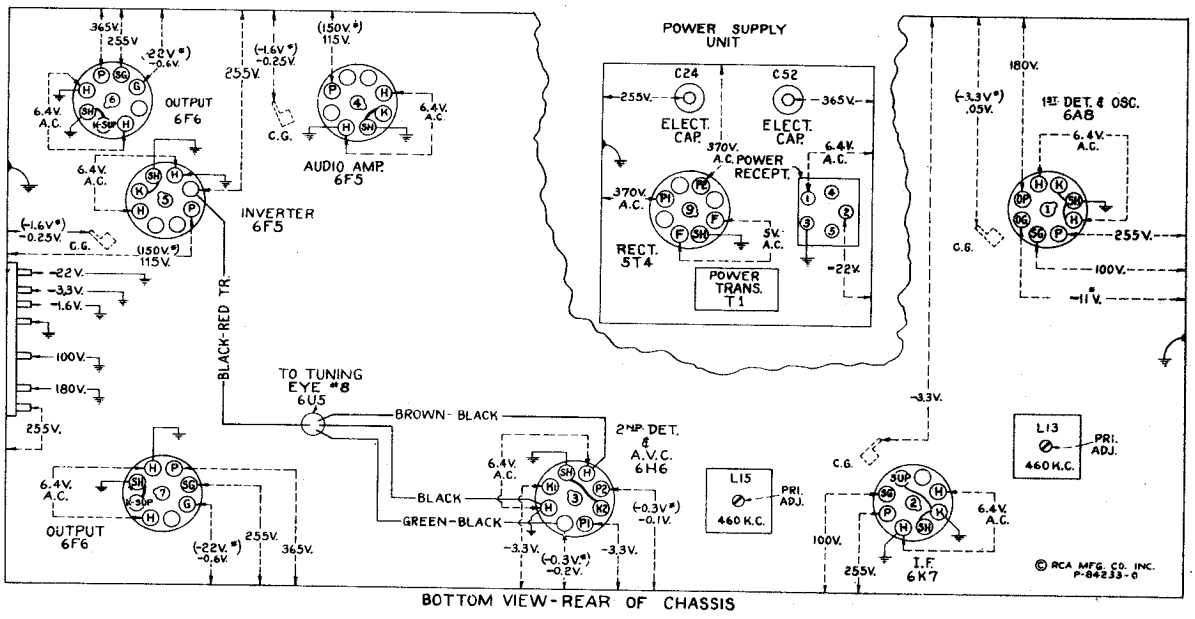

Figure 2—Radiotron Socket Voltages and Trimmer Locations

Measured at 117 volts, 60-cycle supply. Measurements made with set tuned to quiet point near 1,000 kc; volume control at minimum; Radio-Phonograph switch to "Radio"; using a 1,000-ohm-per-volt meter having ranges of 10, 50, 250, and 500 volts. (Use nearest range above the specified measured voltage.) **Measurements made to chassis unless otherwise indicated.**

Note.—Values with star (*) are **operating** voltages. Values not starred are actual **measured** voltages.

©John F. Rider, Publisher

©John F. Rider, Publisher

Automatic Record Changer

Under normal operating conditions, service requirements on this mechanism should be negligible. Occasionally, however, certain adjustments may be necessary. It is important to refrain from forcing the mechanism if there is a tendency to bind or jam, when operating or adjusting, since bent levers and possibly broken parts may result.

Record Changer Adjustments.—Mount motor-board on a level support. Remove turntable and cover at right of turntable. Adjustment locations are designated on figure 5 as A, B, etc. The adjustments are explained under corresponding symbols below. Perform adjustments in the following order:

A.—Trip rod "A" should be engaged in "Switch Lever" slot. Adjust trip rod "A" to obtain about ⅛ of an inch clearance from motor-board.

B.—Adjust "B" to the position shown.

C.—With "Index Lever" in "Manual" position, "Pickup Arm" rotated to extreme left, and switch tripped to open contacts "C," adjust contact points "C" by bending the stiff contact arm until points are opened 10 to 30 thousandths of an inch.

D.—With "Index Lever" in "Manual" position, release set screw "D" and force "Manual Index Finger" as far as it will go towards "Trip Pawl Stop Pin." Tighten set screw.

E.—Adjust at "E" to provide approximately 1/32 of an inch between outer end of "Link Slot" and screw when rubber "Bumper" is in contact with stop bracket.

F. and G.—Remove rubber silencer at "F" and adjust "F" and "G" so ejector tip "F" is in line with "Spindle." Longitudinal movement, with respect to "Ejector Arm," may be effected by loosening hex. head at "F." Lateral movement of "Ejector Arm" may be effected by adjustment "G."

H.—Adjust "H" so under side of pickup head can be raised 2½ inches above motor-board.

J.—Adjust screw "J" until friction will just force "Trip Finger" to move "Trip Pawl" when "Index Lever" is in "12" inch position.

N.—Adjust needle pressure by turning screw under center of "Pickup Arm" so that a force of 72 grams (2.5 ounces) is required to lift needle from record. Hook scale under needle screw to measure force.

K.—Adjustment "N" must be performed prior to this adjustment. With a 12-inch record on turntable, turn on "Motor Switch," place "Index Lever" to "12" position and adjust "K" so that "Cable" tension will allow needle to lower slowly on start of record at completion of eject cycle. Turn "Motor Switch" off after eject cycle is completed and check to see that "Cable" is slightly loose when "Pickup Arm" is moved against "Spindle." Replace turntable and put a needle in "Pickup."

L.—Adjust "L" so needle will drop into center of smooth portion at the start of a 12-inch record when "Index Lever" is in "12" inch position and "Pickup Arm" is to extreme right.

M.—Loosen three screws "M" and rotate "Spacer" until pointer on "Spacer" is in line with screw to right of "Pickup Arm."

P.—Adjust turntable height by insertion or removal of thrust washers at "P" so ejector tip "F" will not eject bottom 12-inch record but will eject second from bottom record.

Q.—Adjust position of shorting switch at "Q" so switch closes when needle is just outside a 12-inch record.

R.—Adjust screw "R" upward just enough so that with one record on turntable and ejector tip "F" resting on record surface, there is 1/32 of an inch clearance between screw "R" and "Ejector Arm."

Record Changer Service Hints.—A general perusal of the following possible troubles which may be experienced with this mechanism, together with the adjustment or adjustments to be applied for same, will enable one to ascertain that which pertains to the instrument at hand:

1.—"Ejector Arm" goes through normal cycle but does not eject records. Adjust "F" and "G." See that "Spindle" slides freely.
2.—Ejects bottom record. Lower turntable by removing thrust washers at "P."
3.—Ejects records properly down to second from bottom of pile. Raise turntable by placing thrust washers at "P."
4.—Eject cycle does not start after needle reaches eccentric groove. Adjust "J" (turn screw clockwise).
5.—Eject cycle starts before eccentric record groove is reached. Adjust "J" (turn screw counter-clockwise). Set "Index Lever" to "12" inch or "10" inch position **after** starting to play record. Do not jar motor-board during automatic operation.
6.—Lateral movement of "Pickup Arm" has no control over starting and stopping. Adjust clearance of rod "A." See that rod "A" engages in slot of "Switch Lever."
7.—Fails to eject top record of a pile because "Ejector Arm" strikes record in returning to center at end of eject cycle. Adjust screw "R" upward to provide greater incline so that roller in "Ejector Arm" will roll back during cycle.
8.—Pickup strikes record during eject cycle. Adjust "K" and "H."
9.—Starts playing record several grooves in from beginning or needle misses record entirely. Adjust "L."
10.—Needle falls on smooth portion at start of record but does not move into playing groove. Adjust "M." Check to see that motor-board is level.
11.—Automatic stop does not operate after needle reaches eccentric groove. Adjust "B" and "C."
12.—Motor does not re-start when "Pickup" is returned to rest position. Adjust "C." See that switch mechanism parts move freely and springs are functioning.
13.—Starts eject cycle although set for "Manual" operation. Adjust "D."
14.—Noise in loudspeaker while changing needles. Clean "Shorting Contact" and adjust "Q."
15.—"Wow" in record reproduction.—Instrument should be warmed to about 65° F. Ejector tip should be centered and free to rotate (adjustments "F" and "G"). There should be no solid particles on gear teeth or in grease; no tendency to bind. Turntable plate should be in dynamic balance and "Spindle" should be straight. Proper lubrication is important.

Lubrication.—Clean motor gear-box thoroughly before re-greasing. Apply less than a tablespoonful of a grease, such as "Cities Service No. 7035-A1" or "Koolmotor Universal Trojan No. 1," directly on gears, taking care to get none in rotor bearings. Put medium motor oil (S.A.E. No. 30) in the oil holes. Cover main gear and cam of automatic mechanism with a light grease such as "Socony-Vacuum No. 2." Any good household oil, such as "3-IN-ONE" is suitable for the ejector-tip "F" bearing.

"Electric Tuning" Alignment

Each push button connects a particular oscillator coil and antenna trimmer condenser. The tuning of this coil and this condenser selects a station.

The frequency ranges for various push-buttons are:

(1) 540 to 1,160 kilocycles—Adjust L-20 and C-35
(2) 540 to 1,160 kilocycles—Adjust L-21 and C-36
(3) 600 to 1,260 kilocycles—Adjust L-22 and C-37
(4) 600 to 1,260 kilocycles—Adjust L-23 and C-38
(5) 770 to 1,550 kilocycles—Adjust L-24 and C-39
(6) 770 to 1,550 kilocycles—Adjust L-25 and C-40

The following are the steps in aligning a push-button selector:

(1) Manually tune to desired station, then switch range selector to "Electric Tuning."
(2) Press a push-button whose frequency range includes the station.
(3) Adjust oscillator coil corresponding to that push-button, to receive the desired station.
(4) Adjust antenna condenser for that push-button to receive the desired station.
(5) Check alignment by switching to manual tuning. Magic Eye will not change appreciably if alignment is correct.
(6) After receiver has warmed, repeat above adjustments.

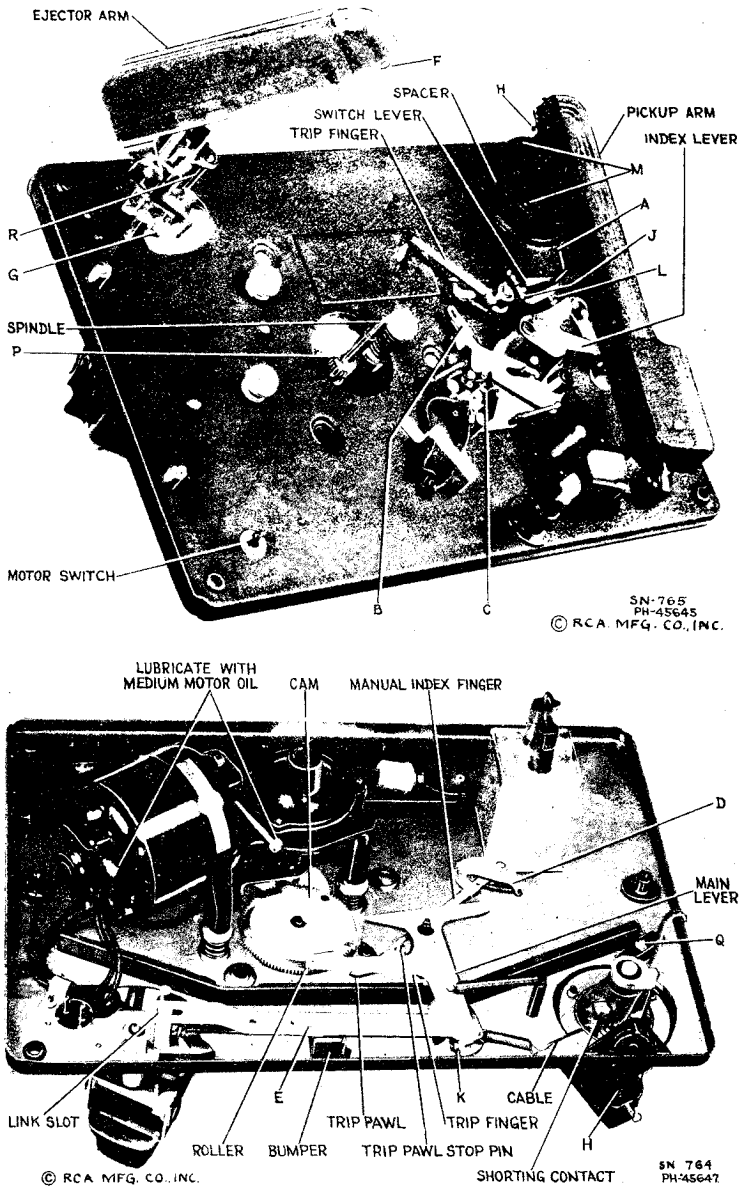

Figure 5—Automatic Record Changer Adjustments

©John F. Rider, Publisher

Calibrate the tuning dial by adjusting dial pointer to the low-frequency (end) calibration mark on dial with the gang tuning-condenser plates in full-mesh position. The pointer is soldered in place on the drive cable.

Perform alignment in proper order, tabulated below, starting with No. 1 and following all operations across, then No. 2, etc. Adjustment locations are shown on figures 1 and 2.

Cathode-ray alignment is highly preferable; the connections to the chassis are shown on figure 4. If an output indicator is used, connect it across the loudspeaker voice-coil and advance the receiver volume control to full-volume position.

Connect the "low" output terminal of the test oscillator to the receiver "G" (ground) terminal for all alignment operations. Regulate the output of the test oscillator so that minimum signal is applied to the receiver to obtain an observable output indication. This will avoid a-v-c action.

The term "Dummy antenna" means the device which must be connected between the "high" test-oscillator output and the point of connection to the receiver in order to obtain ideal alignment. "No signal, 550-750 kc" means that the receiver should be tuned to a point between 550 and 750 kc where no signal or interference is received from a station or local (heterodyne) oscillator. "Min. Eye" means minimum width of dark sector of "Magic Eye" or greatest deflection.

For further details on alignment, refer to booklet "RCA Victor Receiver Alignment."

Order of Alignment	Test Oscillator: Connection to Receiver	Test Oscillator: Dummy Antenna	Test Oscillator: Frequency Setting	Range Selector	Receiver Dial Setting	Circuit to Adjust	Adjustment Symbols	Adjust to Obtain
1	6K7 I-F Grid Cap	.001 Mfd.	460 kc	"Standard Broadcast"	No Signal 550-750 kc	2nd I-F Trans.	L15 and L16	Max. (peak)
2	6A8 Det. Grid Cap	.001 Mfd.	460 kc	"Standard Broadcast"	No Signal 550-750 kc	1st I-F Trans.	L13 and L14	Max. (peak)
3	Ant. Term. A1	300 Ohms	6,000 kc	"Medium Wave"	6 mc	"B" Osc.	C31	Max. (peak)
4	Ant. Term. A1	300 Ohms	6,000 kc	"Medium Wave"	6 mc	"B" Ant.	C3	Max. (peak)
5	Ant. Term. A1	300 Ohms	20,000 kc	"Short Wave"	20 mc	"C" Osc.	C42	Max. (peak)*
6	Ant. Term. A1	200 Mmfd.	600 kc	"Standard Broadcast"	600 kc	"A" L-F Osc.	L12	Max. (peak)
7	Ant. Term. A1	200 Mmfd.	1,500 kc	"Standard Broadcast"	1,500 kc	"A" H-F Osc.	C29	Max. (peak)
8	Ant. Term. A1	200 Mmfd.	600 kc	"Standard Broadcast"	600 kc	"A" L-F Osc.	L12	Max. (peak)
9	Ant. Term. A1	200 Mmfd.	1,500 kc	"Standard Broadcast"	1,500 kc	"A" H-F Osc.	C29	Max. (peak)
10	Connect an antenna to receiver Ant. Term. A. See Electric Tuning Alignment described below.		540-1,160 kc	"Electric Tuning"	540-1,160 kc	"A" Osc. 1 & Ant. 1	L20 and C35	Min. Eye
11			540-1,160 kc	"Electric Tuning"	540-1,160 kc	"A" Osc. 2 & Ant. 2	L21 and C36	Min. Eye
12			600-1,260 kc	"Electric Tuning"	600-1,260 kc	"A" Osc. 3 & Ant. 3	L22 and C37	Min Eye
13			600-1,260 kc	"Electric Tuning"	600-1,260 kc	"A" Osc. 4 & Ant. 4	L23 and C38	Min. Eye
14			770-1,550 kc	"Electric Tuning"	770-1,550 kc	"A" Osc. 5 & Ant. 5	L24 and C39	Min. Eye
15			770-1,550 kc	"Electric Tuning"	770-1,550 kc	"A" Osc. 6 & Ant. 6	L25 and C40	Min. Eye

* Use maximum capacity peak if two peaks can be obtained. Check for image signal by shifting receiver dial to 20.92 mc.

REPLACEMENT PARTS

STOCK No.	DESCRIPTION	Unit List Price
	RECEIVER ASSEMBLIES	
30755	Arm—Band indicator operating arm—fastens on range switch shaft	.35
14384	Belt—Drive belt	.18
30864	Board—Antenna and ground terminal board	.40
30752	Bracket—Tuning tube mounting bracket and clip	.25
30754	Cable—Band indicator operating cable	.08
30728	Cable—Pickup cable and connector	.50
11350	Cap—Grid contact cap	.05
30766	Cap—Rubber cap for tuning tube	.15
30751	Capacitor—Trimmer comprising two sections each 2-10 Mmfd. and one section 3-30 Mmfd. (C29, C31, C42)	.55
30750	Capacitor—Dual trimmer 30-180 Mmfd. each section (C39, C40)	.45
30764	Capacitor—Dual trimmer 65-280 Mmfd. each section (C37, C38)	.45
30765	Capacitor—Dual trimmer 120-470 Mmfd. each section (C35, C36)	.50
12723	Capacitor—56 Mmfd. (C6)	.25
30769	Capacitor—100 Mmfd. (C28)	.40
14262	Capacitor—110 Mmfd. (C7, C8)	.30
12404	Capacitor—120 Mmfd. (C9, C10)	.30
12725	Capacitor—150 Mmfd. (C41)	.25
12405	Capacitor—180 Mmfd. (C12)	.25
13003	Capacitor—180 Mmfd. (C18)	.25
12952	Capacitor—330 Mmfd. (C5)	.25
30433	Capacitor—470 Mmfd. (C45)	.30
30768	Capacitor—500 Mmfd. (C30)	.30
30767	Capacitor—2,000 Mmfd. (C32)	.40
12811	Capacitor—3,600 Mmfd. (C54)	.45
30303	Capacitor—.0035 Mfd. (C2)	.40
4838	Capacitor—.005 Mfd. (C18, C19, C48, C51, C55)	.25
14393	Capacitor—.01 Mfd. (C13, C17, C27, C50)	.30
11315	Capacitor—.015 Mfd. (C16)	.20
4870	Capacitor—.025 Mfd. (C21)	.20
4839	Capacitor—0.1 Mfd. (C11, C20, C53)	.30
30867	Capacitor—0.5 Mfd. (C14, C49)	.30
30745	Coil—Antenna coil and shield A, B, C, bands (L1, L3, L4, L5)	2.05
30747	Coil—Oscillator coil A band (L20 or L21)	.60
30748	Coil—Oscillator coil A band (L22 or L23)	.60
30749	Coil—Oscillator coil A band (L24 or L25)	.60
30746	Coil—Oscillator coil A, B, C bands (L6, L7, L8, L9, L10, L11, L12)	2.10
30740	Condenser—2-gang variable tuning condenser (C3, C4, C34)	4.25
5040	Connector—4-contact female for speaker cable	.30
14781	Connector—5-contact male for power cable	.35
30868	Connector—2-contact female for A.C. switch cable	.35
14783	Connector—2-contact female for compartment lamp cable	.25
30743	Control—Volume control, tone control and power switch in one unit (R11, R25, S3)	3.00
30765	Cord—Indicator drive cord	.40
30846	Core—Adjustable core for push button coils	.30
30881	Dial—Station selector dial scale	.85
30753	Disc—Band indicator disc with colored segment	.40
30741	Drive—Variable condenser vernier drive shaft and pinion gear	1.40
30587	Drum—Drive belt drum—fastens on variable condenser vernier drive shaft	.45
30761	Drum—Indicator cord drum—fastens on variable condenser rotor shaft	.65
14341	Idler—Drive idler pulley, bracket and spring	.65
30762	Indicator—Indicator pointer and slider	.15
5226	Lamp—Dial lamp	.17
30757	Pulley—Large size pulley for indicator cord—located at top left corner of dial bracket	.30
30758	Pulley—Medium size pulley for indicator cord—located at top right side of dial bracket	.25
14697	Pulley—Small size pulley for indicator cord—located at top right hand corner of dial bracket	.35
30771	Resistor—50 ohms, flexible type, 2½ watts (R1)	.20
30866	Resistor—12,000 ohms, 1 watt (R35)	.22
3998	Resistor—15,000 ohms, ½ watt (R8)	.20
11175	Resistor—18,000 ohms, ½ watt (R27)	.20
14284	Resistor—22,000 ohms, 1/10 watt (R6)	.15
12454	Resistor—33,000 ohms, ½ watt (R3)	.20
14560	Resistor—100,000 ohms, ½ watt (R31, R36)	.20
11398	Resistor—220,000 ohms, 1/10 watt (R5)	.15
12199	Resistor—270,000 ohms, ½ watt (R10, R12, R29, R30)	.20
11172	Resistor—470,000 ohms, ½ watt (R9)	.20
11397	Resistor—560,000 ohms, 1/10 watt (R2)	.15
12013	Resistor—1 Megohm, 1/10 watt (R14)	.15
13730	Resistor—1 Megohm, ½ watt (R22, R28)	.20
30208	Resistor—1.2 Megohm, ½ watt (R24)	.20
12679	Resistor—2.2 Megohm, ½ watt (R4, R13)	.20
30865	Resistor—Voltage divider comprising one 1,500 ohm, one 2,100 ohm, one 2,900 ohm, two 15 ohm and one 165 ohm sections (R16, R17, R18, R20, R33, R34)	1.10
4059	Screw—Trip lever clutch tension adjustment screw	.02
4586	Screw—Special screw used to fasten main lever and link assembly bushing	.08
13637	Spacer—Pickup arm mounting spacer	.75
13638	Spring—Actuating spring	.08
4585	Spring—Manual index lever finger tension spring	.06
4061	Spring—Main spring lever tension spring or pickup lift cable spring	.11
2893	Spring—Trip lever latch plate tension	.06
3676	Spring—Cam and gear pawl tension spring	.04
14916	Spring—Pickup lift lever spring	.12
4125	Spring—Eject arm horizontal action tension spring	.06
13636	Stud—Pickup arm lift cable stud and nut	.08
2917	Washer—Spring washer—"U" type	.03
	AUTOMATIC SWITCH ASSEMBLIES	
3994	Cover—Motor switch cover	.40
10184	Plate—Automatic brake latch plate	.22
10174	Springs—Automatic brake springs	.30
6805	Switch Assembly—Automatic switch, complete	4.20
3322	Switch—Motor switch (S18)	1.35
	MOTOR ASSEMBLIES	
9651	Motor—105-125 volts—60 cycles (M1)	*
9650	Motor—105-125 volts—60 cycles (M1)	*
12050	Suspension Spring — Motor mounting spring, washer and stud assembly — comprising six springs, six cup washers, three spring washers and three studs	1.05
	MOTOR BOARD ASSEMBLIES	
11881	Base—Phonograph compartment lamp socket and base	.90
14819	Cable—Shielded pickup cable—connects shorting switch to compensator pack	.70
12051	Capacitor—2 Mfd., complete with 2-contact male connector for use with motor, Stock Nos. 9650 or 9651 only (C56)	7.95
14805	Connector—2-contact male connector for Stock Nos. 12051, 13101 or phono compartment lamp leads	.20
4577	Connector—2-contact male connector for motor cable	.45
14783	Connector—2-contact female connector for motor leads	.25
14760	Cup—Used-needle cup	.45
14762	Damper—Turntable damper	.45
11553	Escutcheon—Index escutcheon engraved "Manual —12—10"	.60
14888	Knob—Needle rest knob	.20
4340	Lamp—Phonograph compartment lamp—6.3 volts	.17
3764	Nut—Cap nut for motor board suspension	.15
14761	Rest—Pickup rest	2.10
14825	Roller—Pickup arm cable guide roller—comprising bracket, roller and guide pin	.65
11711	Shade—Phonograph compartment lamp shade	.66
14758	Spacer—Pickup arm mounting spacer	.70
14270	Spring—Retaining spring for knob, Stock No. 14758	.05
4565	Spring—Tension spring for needle rest	.06
30157	Switch—Pickup shorting switch (S19)	.60
4671	Switch—Operating switch—toggle switch (S17)	1.10
14759	Turntable, complete	5.65
	REPRODUCER ASSEMBLIES Speaker RL-70E-2	
13866	Cap—Dust cap for cone center	.03
11234	Coil—Field coil (L19)	3.85
11489	Coil—Hum neutralizing coil (L18)	.30
12687	Cone—Reproducer cone and dust cap (L17)	1.95
5039	Plug—4-contact male plug for reproducer	.33
14535	Reproducer, complete	12.90
14534	Transformer—Output transformer (T2)	3.85
14357	Washer—Spring washer to hold field coil	.06
	OPERATING MECHANISM	
14754	Cam—Cam and gear assembly	2.95
6808	Clutch—Trip lever friction clutch	.35
14756	Cover—Metal cover for trip lever and friction finger assembly	.85
6809	Finger—Manual index lever finger assembly	.65
3670	Finger—Friction finger assembly	.45
11554	Lever—Manual index lever—less pin	1.25
14755	Lever—Main lever and link assembly	1.85
14914	Lever—Pickup lift cable lever	.45
11555	Lever—Trip lever and friction clutch assembly	2.45
30624	Pawl—Trip pawl assembly	.85
3672	Pin—Manual index lever pin	.60
13635	Plate—Eject arm actuating plate assembly	1.40
4564	Screw—Manual index lever finger set screw	.04

* Prices upon application to authorized RCA Victor Distributor.

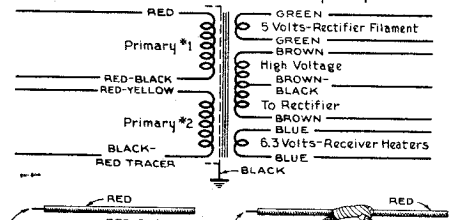

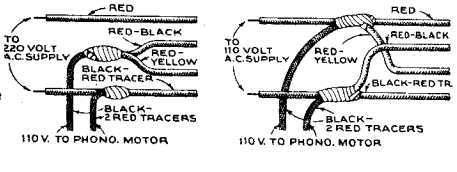

Figure 6—Schematic and Primary Lead Connections for 110-220 volt Power Transformer (Stock No. 30869)
Resistance of each primary winding, 6.3 ohms.
High voltage secondary winding, 260 ohms total.

MODEL U109
Circuit Data

RCA MFG. CO., INC.

Circuit Arrangement

The radio receiver circuit consists of an r-f amplifier stage, first-detector (converter) stage, separate heterodyne-oscillator stage, oscillator control stage, two i-f amplifier stages, diode-detector—automatic volume and frequency control stage, audio voltage-amplifier stage, tuning indicator "Magic Eye," audio driver stage, push-pull triode power-amplifier stage, and a full-wave rectifier. The phonograph circuit consists of a volume expander stage, expander amplifier stage, expander rectifier, audio driver stage, push-pull power amplifier stage, and full-wave rectifier.

The antenna and detector coils are constructed with a special type of winding ("qumulative") to provide increased sensitivity and selectivity on the "A" band. The "A," "B," and "C" sections on both coils are wound on single forms and are series connected. The range selector operates in such a manner that the correct portions are selected for the primary and secondary windings on each band. The "A," "B," and "C" oscillator sections are likewise wound on a single form but are connected so they operate separately. Undesirable interaction of unused windings with the tuned circuits is prevented by shorting out the proper sections with the range selector.

The intermediate-frequency amplifier consists of two RCA-6K7 tubes in a two-stage transformer-coupled circuit. The windings of all i-f transformers are resonated by fixed capacitors and are adjusted by molded magnetite cores to tune to 460 kc. A third winding, L17, in the first i-f transformer, closely coupled to the primary, L15, is placed in series with the main secondary L16 when the fidelity control switch S5 is thrown to "broad" position (see figure 1), thereby increasing the coupling between the primary and secondary circuits with a consequent broadening of the band width of the i-f amplifier, permitting higher fidelity reception.

The function of the automatic-frequency-control circuit is to automatically change the frequency of the heterodyne oscillator so that the correct i-f frequency is formed for the i-f amplifier. The circuit consists essentially of an i-f discriminator which, as the name implies, discriminates or furnishes control voltage of the correct polarity to an oscillator frequency-control tube for generated i-f carrier frequencies slightly above and below 460 kc, or the frequency to which the i-f amplifier is tuned.

The plate circuit of the RCA-6J7 oscillator control tube is caused to act as an apparent variable inductance in parallel with the "A" band oscillator tuned circuit of which coil L14 is a part. The series **combination** of resistor R41 and the oscillator control-tube grid to cathode capacitance is also in parallel with the oscillator tuned circuit. Since the resistance of R41 is many times greater than the reactance of the grid-cathode capacitance, at the oscillator frequency, the r-f current through the combination will be practically in phase with the r-f voltage across the oscillator tuned circuit. However, the r-f voltage impressed across the grid-cathode capacitance section of the combination will lag the r-f voltage across the combination, or the tuned circuit, approximately 90 degrees. The grid-cathode r-f voltage will be amplified by the control tube but will be shifted an additional 180 degrees (grid and plate voltages of all tubes are always opposite in phase) so that the amplified r-f voltage appearing across the plate circuit will now lead the voltage across the combination or the tuned circuit by 90 degrees, or, in other words, the control tube is acting as an equivalent shunt inductance. The amount of this action is determined by the amplification of the tube, which in turn is governed by the grid-cathode bias voltage. In operation a residual bias is developed across the cathode resistor R43. The d-c control grid voltage is fed to the control grid from the discriminator circuit through resistor R44. If this voltage is negative with respect to ground, the amplification of the control tube will be decreased, the apparent plate circuit inductance of the tube increased, which will lower the frequency of the oscillator tube. The converse will occur when the grid voltage is positive with respect to ground.

The action of the discriminator circuit depends upon the fact that a 90-degree phase difference exists between the primary and secondary potentials of a double-tuned loosely-coupled transformer when the resonant frequency is applied and that this phase difference varies as the applied frequency varies; i.e., the maximum resultant response voltage across the primary and secondary windings connected in series will occur at a frequency either lower or higher in frequency than the frequency to which the individual windings are resonated, respectively depending on whether the windings are connected series aiding or opposing.

The discriminator, or fourth i-f transformer, consists of the primary winding, L24, which is a part of the third i-f transformer secondary tuned circuit (tuned to 460 kc) and the center-tapped secondary, L22. The upper and lower halves of L22 may be considered as two secondary coils, the upper series opposing and the lower series aiding the primary, L24. The magnetite core in L22 is inserted to inductively balance the two halves. The function of coil L23 (magnetite core adjusted), in parallel with L22, is to tune the secondary to 460 kc. Therefore, the maximum voltage will be applied to diode circuit P_2K_2, R46, and R45 when the i-f signal frequency is above 460 kc and to the diode circuit P_1K_1 and R20 when the i-f signal frequency is below 460 kc. Resistor sections R46-R45 and R20 are connected in series between ground and a point leading to the oscillator control tube grid.

D-c voltages, resulting from diode rectification, across section R46-R45 and section R20 are always in opposition, consequently the oscillator control-tube grid-bias voltage is a differential amount, depending upon the i-f signal strength and its frequency deviation from the nominal value of 460 kc. The polarity of this differential oscillator control-tube grid-bias, with respect to ground, depends on whether the i-f signal frequency is above or below 460 kc, but is always in the direction which will bring the generated i-f frequency nearer to 460 kc. A-f-c action is automatically eliminated for "manual" tuning by grounding diode cathode K_1 through switch S7. A-v-c voltage and audio signal components are developed across resistor section R46-R45. The audio component is taken from R46.

The dynamic volume expander is used with the phonograph so that greater volume-range reproduction may be realized from disc recordings. The gain is varied by means of the volume expander in direct proportion to the average intensity of the recorded sound. To accomplish this, the expander control R103 in series with R104 and R105 is placed in shunt with the phonograph volume control R108, and the arm of the expander control is connected to the control grid of the RCA-6F5 expander amplifier. The audio voltage applied to this tube is amplified and applied to diode plate P1 of the RCA-6H6 expander rectifier through capacitor C215. The rectified current develops a voltage across resistor R215 which is applied to the No. 3 grid of the RCA-6L7 volume expander and varies the amplification of this tube so that the gain will be increased for loud passages and decreased for soft passages. The volume expander circuit is arranged so that there is no appreciable change of gain, with an average record, between the minimum expansion (second dot) and "Off" positions of the "Dynamic Amplifier" control.

General Description

The Model U-109 Radio-Phonograph Combination employs the latest developments in the art of record and radio reproduction. Features of design effected in the radio receiver include "Electric Tuning" with push-button operation; automatic frequency control; "qumulative-wound" antenna and detector coils; tuned r-f amplifier; magnetite-core adjusted i-f transformers and low-frequency "A" oscillator tracking; two-stage i-f amplifier; automatic volume control; "Magic Eye" tuning tube; plunger-type, air-dielectric trimming capacitors, two-point aural-compensated volume control; "Fidelity" control; "Music-Speech" control; and push-pull triode power output stage. Features of design pertinent to phonograph operation include a crystal pickup with top-loading needle socket; improved dynamic expander; automatic operation with either 10-inch or 12-inch records; and a separate two-point aural compensated volume control. A super-sensitive 12-inch electrodynamic loudspeaker with a high-frequency tone diffuser is used. In addition, this model has a cabinet incorporating the "Magic Voice".

©John F. Rider, Publisher

RCA MFG. CO., INC.

MODEL U109
Schematic

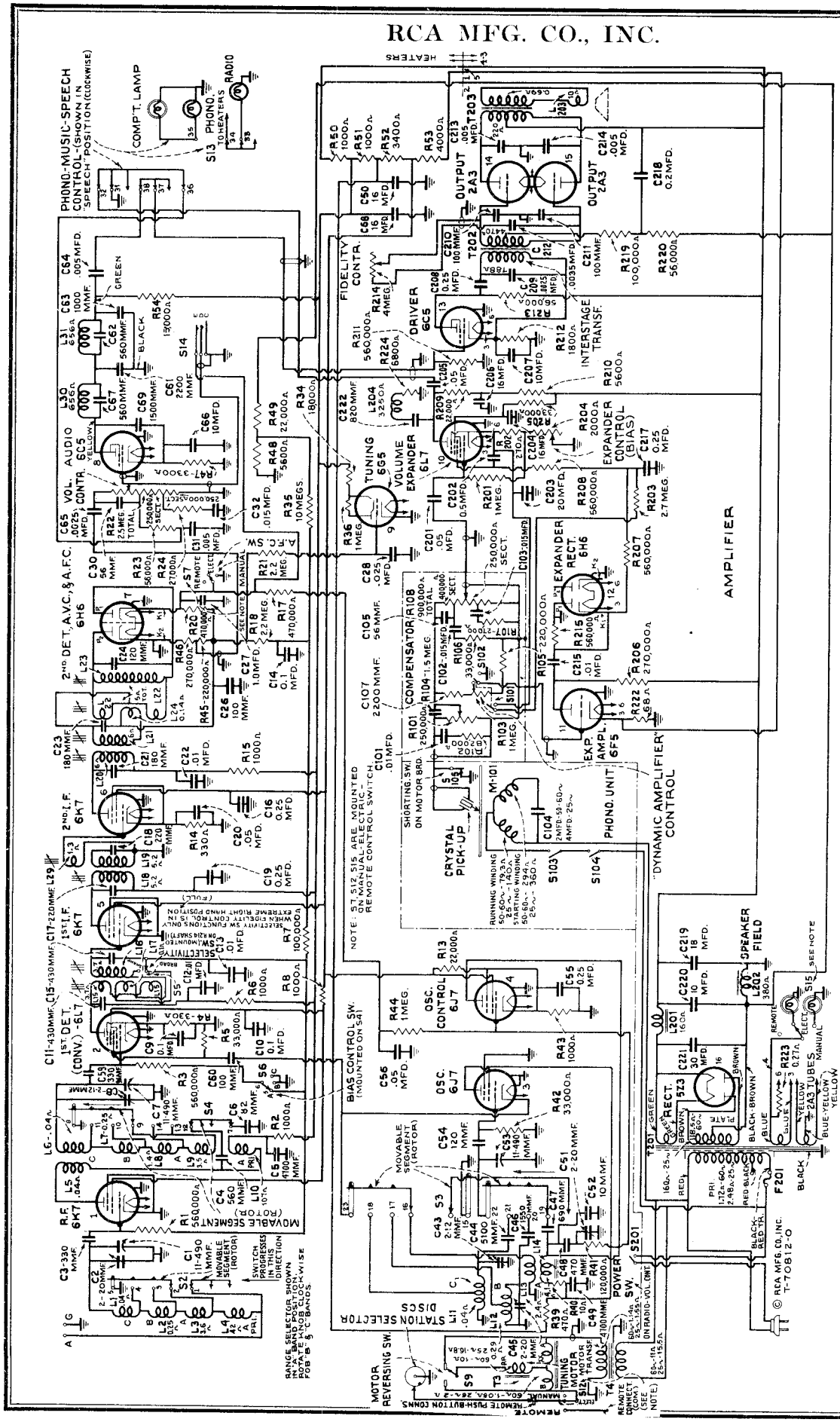

R-F Alignment Frequencies

"Short Wave" (C)..... 20,000 kc (osc., det., ant.)
"Medium Wave" (B)..... 6,000 kc (osc.)
"Broadcast" (A)..... 600 kc (osc.), 1,500 kc (osc.)

Frequency Ranges

"Broadcast" (A)..... 530-1,720 kc
"Medium Wave" (B)..... 2,100-6,800 kc
"Short Wave" (C)..... 6,800-23,500 kc

Intermediate Frequency..... 460 kc

©John F. Rider, Publisher

MODEL U109

R-F Chassis Wiring

Coils, Specs.

RCA MFG. CO., INC.

		Radio Only	Total
Rating A-6	105-125 volts, 60 cycles	190 watts	220 watts
Rating A-5	105-125 volts, 50 cycles	190 watts	220 watts
Rating B-2	105-125 volts, 25 cycles	190 watts	220 watts
Rating C-6	100-130/140-160/200-250 volts, 60 cycles	190 watts	220 watts
Rating C-5	100-130/140-160/200-250 volts, 50 cycles	190 watts	220 watts
Fuse Rating			3 amperes

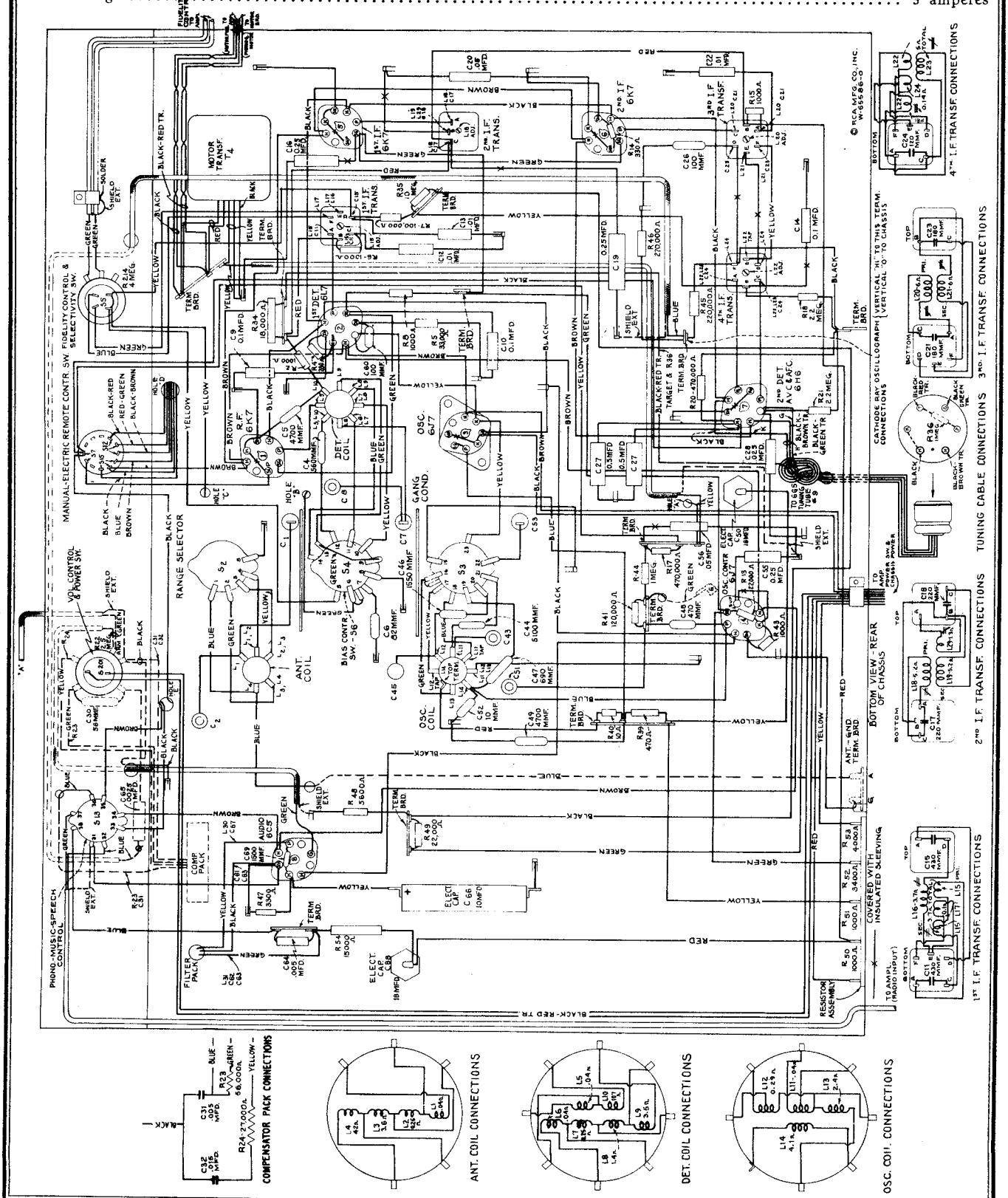

©John F. Rider, Publisher

RCA MFG. CO., INC.

MODEL U109
Power Amplifier
Chassis Wiring
Tuner Wiring

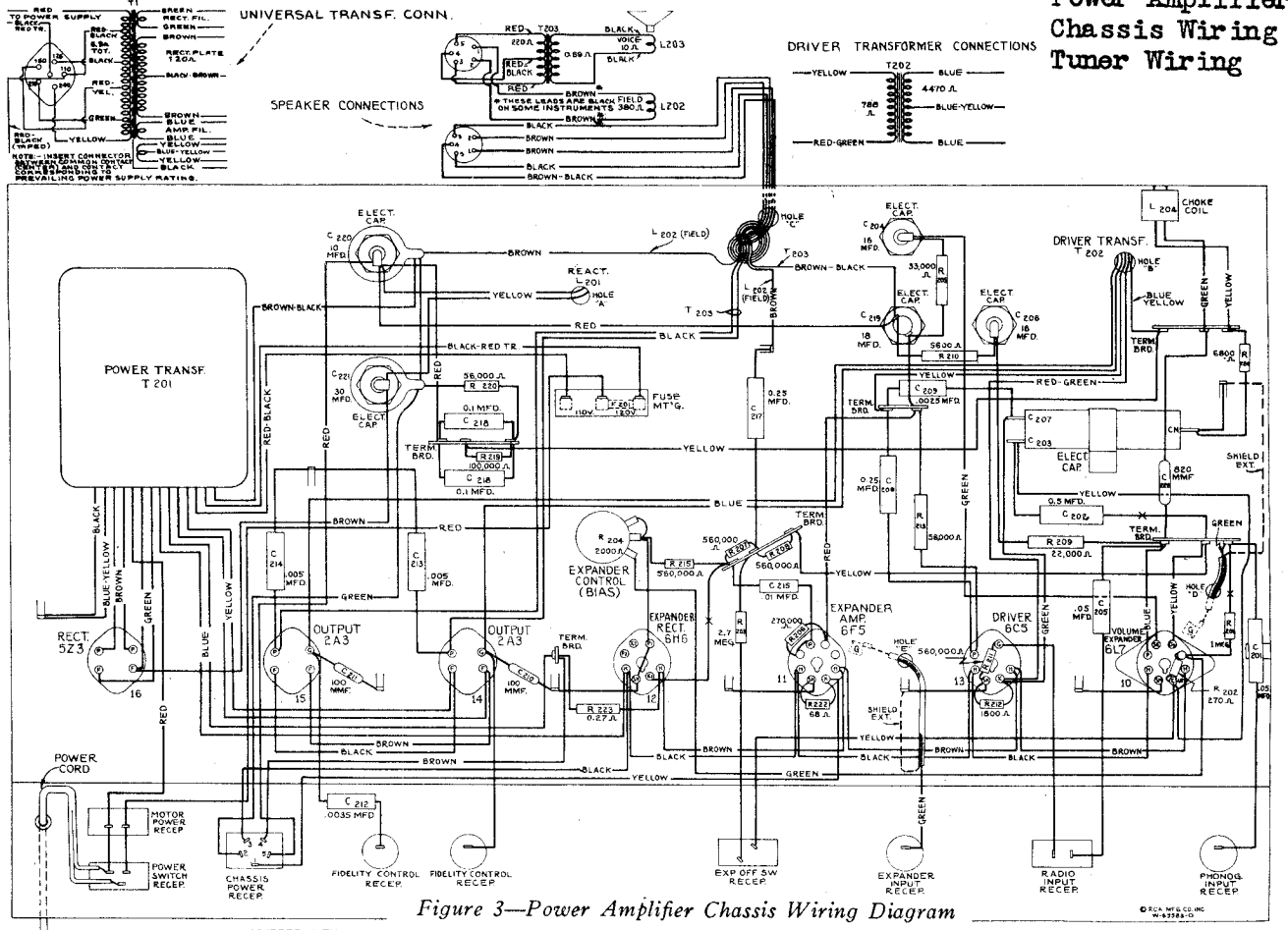

Figure 3—Power Amplifier Chassis Wiring Diagram

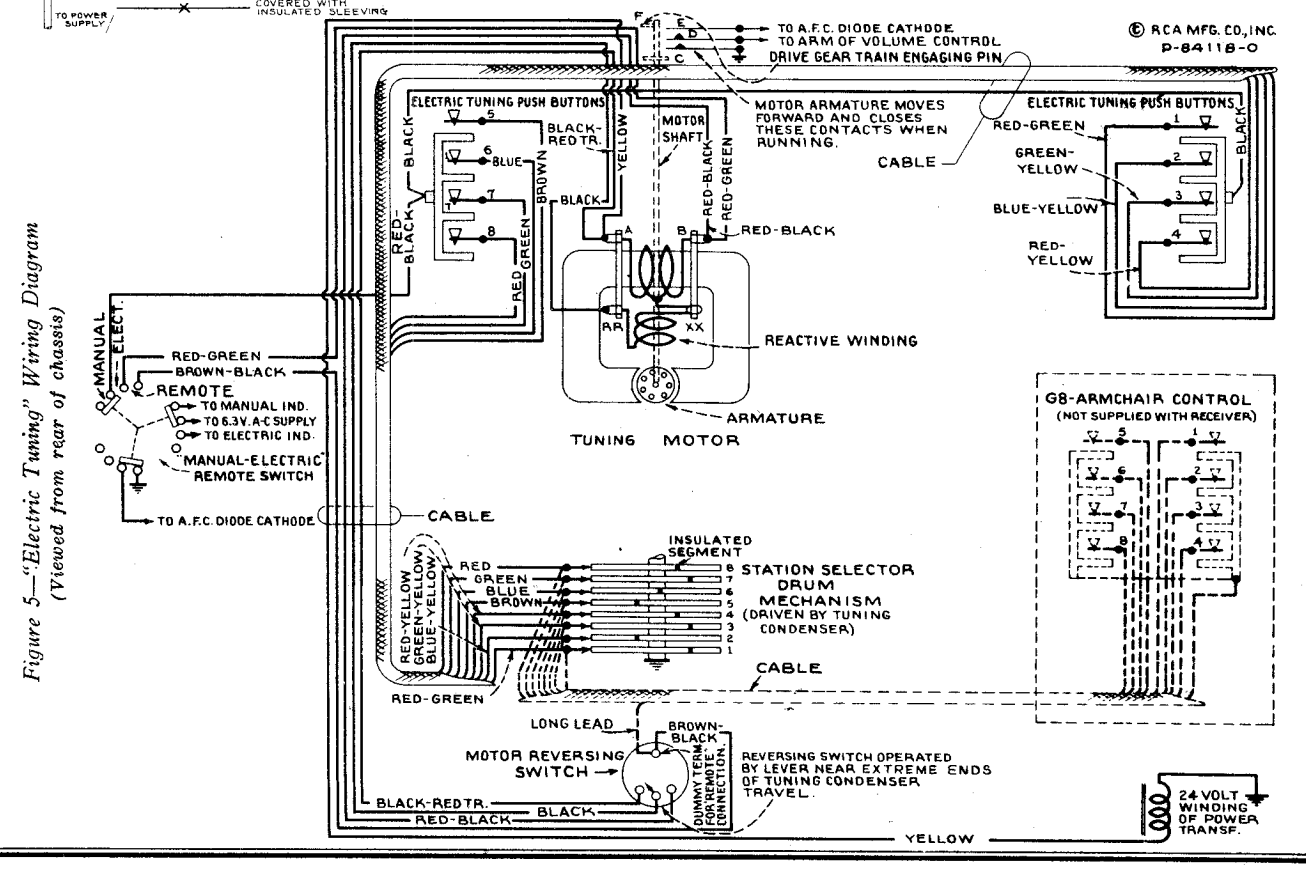

Figure 5—"Electric Tuning" Wiring Diagram (Viewed from rear of chassis)

©John F. Rider, Publisher

MODEL U109
Voltage, Socket
Trimmers

RCA MFG. CO., INC.

PHONOGRAPH
Type..... Automatic Record Ejector
Record Capacity..... Eight 10-inch or seven 12-inch
Turntable Speed..... 78 r.p.m.
Type of Pickup..... Crystal
Pickup Impedance..... 80,000 ohms at 1,000 cycles

POWER OUTPUT
Undistorted..... 12 watts
Maximum..... 15 watts

LOUDSPEAKER
Type..... 12-inch Electrodynamic
Impedance (v.c.)..... 11½ ohms at 400 cycles

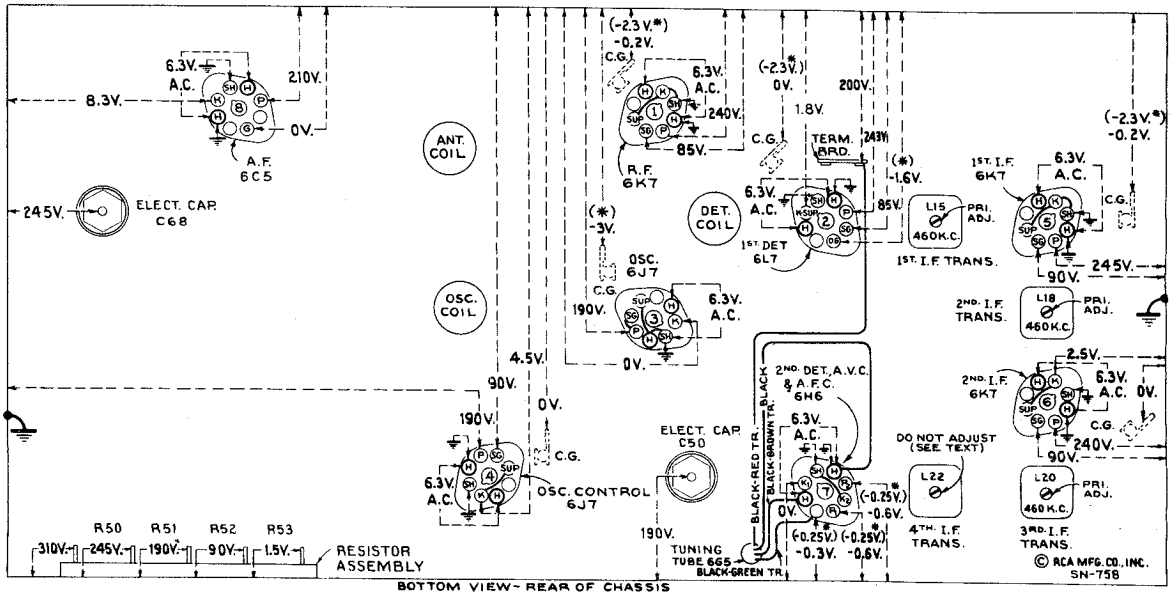

Receiver

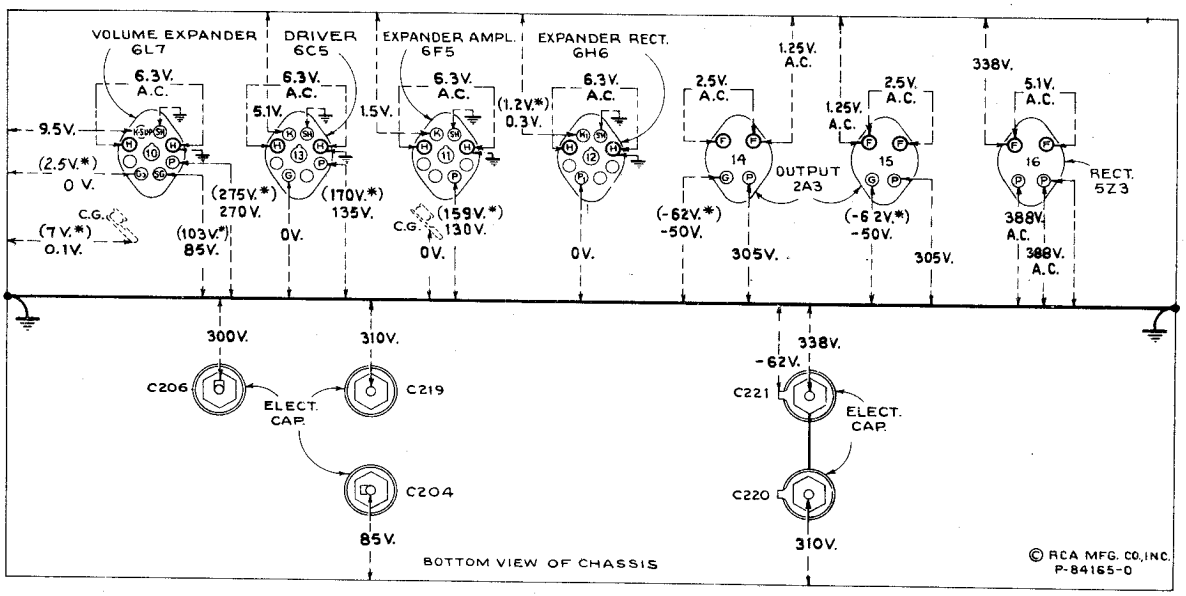

Power Amplifier

Figure 4—Radiotron Socket Voltages, Coil, and Trimmer Locations

Measured at 115 volts, 60-cycle supply—Tuned to approximately 1,000 kc ("Broadcast")—"Manual" control—No signal being received—Both volume controls minimum—"Dynamic Amplifier" control "off"—Speech-Music—Phono. and Fidelity controls optional.

Note: Two voltage values are shown for some readings. The value shown in parentheses with asterisk (*) indicates operating conditions without voltmeter loading. The other value (generally lower) is the actual measured voltage and differs from the value shown in parentheses because of the additional loading of the voltmeter.

Voltage values as specified should hold within ±20% when the receiver is normally operative at its rated line voltage. To duplicate the conditions under which the voltages were measured requires a 1,000-ohm-per-volt d-c meter, having ranges of 10, 50, 250 and 500 volts. Use the nearest range above the specified measured voltage. A-c voltages were measured with a corresponding a-c meter.

©John F. Rider, Publisher

RCA MFG. CO., INC.

MODEL U109
Socket, Trimmers
Current Readings

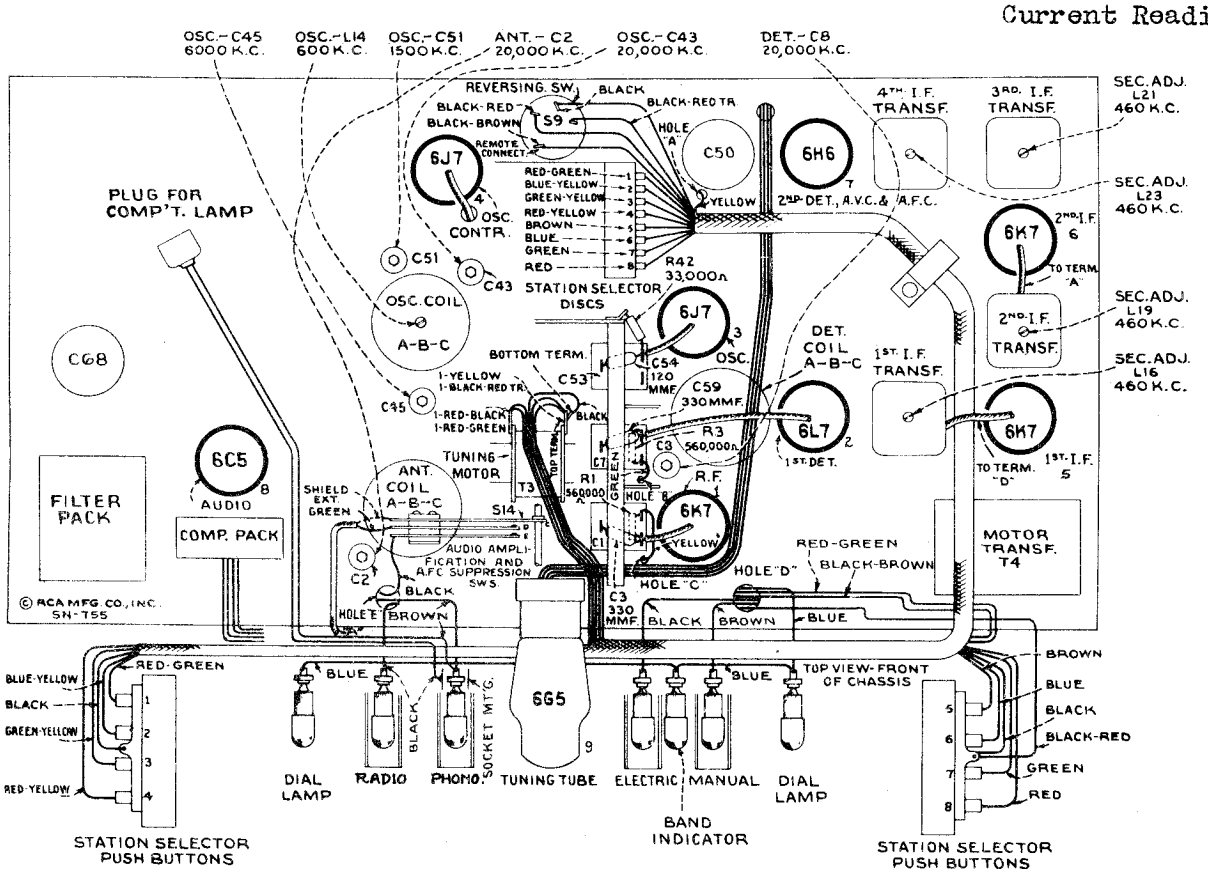

Figure 6—Radiotron, Coil, and Trimmer Locations (Receiver)

Radiotron Cathode Current Readings

Measured with Milliammeter Connected at Tube Socket Cathode Terminals Under Conditions Similar to Those of Voltage Measurements

(1)	RCA-6K7—R-F Amp.	5.0 ma.
(2)	RCA-6L7—1st Det.	6.0 ma.
(3)	RCA-6J7—Osc.	8.5 ma.
(4)	RCA-6J7—Osc. Control	1.2 ma.
(5)	RCA-6K7—1st I-F Amp.	6.0 ma.
(6)	RCA-6K7—2nd I-F Amp.	7.5 ma.
(7)	RCA-6H6—2nd Det., A.V.C. and A.F.C.	—— ma.
(8)	RCA-6C5—1st A-F Amp.	2.5 ma.
(9)	RCA-6G5—Tuning Tube	2.5 ma.
(10)	RCA-6L7—Volume Expander	9.5 ma.
(11)	RCA-6F5—Expander Amp.	0.6 ma.
(12)	RCA-6H6—Expander Rectifier	—— ma.
(13)	RCA-6C5—A-F Driver	2.9 ma.
(14)	RCA-2A3—Output	43 ma.
(15)	RCA-2A3—Output	43 ma.
(16)	RCA-5Z3—Rectifier	168 ma.**

(** Cannot be measured at socket)

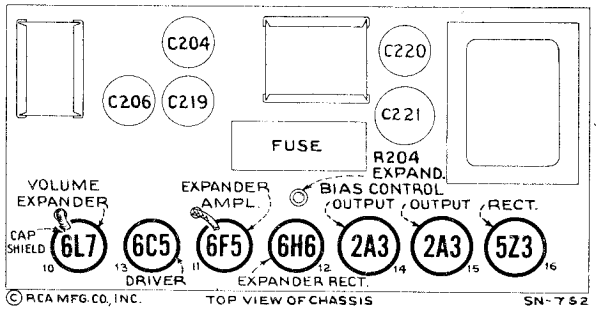

Figure 7—Radiotron Locations (Power Amplifier)

RADIOTRON COMPLEMENT

(1)	RCA-6K7	R-F Amplifier	
(2)	RCA-6L7	First Detector	
(3)	RCA-6J7	Heterodyne Oscillator	
(4)	RCA-6J7	Oscillator Control	
(5)	RCA-6K7	First I-F Amplifier	
(6)	RCA-6K7	Second I-F Amplifier	
(7)	RCA-6H6	Second Detector, A.V.C., and A.F.C.	
(8)	RCA-6C5	First Audio Amplifier	
(9)	RCA-6G5	"Magic Eye" Tuning Tube	
(10)	RCA-6L7	Volume Expander	
(11)	RCA-6F5	Expander Amplifier	
(12)	RCA-6H6	Expander Rectifier	
(13)	RCA-6C5	Audio Driver	
(14)	RCA-2A3	Power Output	
(15)	RCA-2A3	Power Output	
(16)	RCA-5Z3	Full-Wave Rectifier	
Pilot Lamps	(7)	Radio	Mazda No. 46, 6.3 volts, 0.25 amp.
	(1)	Phono Compartment	Mazda No. 40, 6.3 volts, 0.15 amp.

©John F. Rider, Publisher

MODEL U109
Lead Dress
Amplifier Adjustment

RCA MFG. CO., INC.

Service Data

The various diagrams of this booklet contain such information as will be needed to isolate causes for defective operation if such develops. The ratings of the resistors, capacitors, coils, etc., are indicated adjacent to the symbols signifying these parts on the diagrams. Identification titles such as R1, L1, C1, etc., provide reference between the illustrations and Replacement Parts List. The coils, transformer windings, and reactors are rated in terms of d-c resistance to permit continuity checks.

Precautionary Lead Dress.—(1) Bus lead from oscillator coil directly to ground must be as short as possible for correct alignment, (2) bus lead from range switch S3 to oscillator section C53 of variable condenser should be 1½ inches long for correct alignment, (3) bus lead from detector coil to range switch S4 must be as short as possible for correct alignment, (4) bus lead from detector coil to detector section C7 of variable condenser should be 2½ inches long for correct alignment, (5) detector trimming capacitor C8 lead should connect directly to variable condenser C7, (6) bus lead from antenna section of range switch S2 to chassis ground lance must be as short as possible, (7) bus lead from antenna coil to range switch S2 should be 2¼ inches for correct alignment, (8) bus lead from antenna coil to antenna section C1 of variable condenser must be 3⅞ inches over-all with ½ inch bend at coil end for correct alignment, (9) resistors R13, R41, R43, and R44 in the oscillator control tube circuit must be kept free of other component parts for satisfactory operation of the a-f-c circuit, (10) filament leads should all be twisted to reduce hum pickup, (11) filament leads should be dressed away from the terminal board near the 4th i-f transformer, (12) lead from the range switch S3 to the oscillator cathode socket terminal should be dressed under bus wire on socket to hold this lead down close to chassis.

Loudspeaker.—Two types of loudspeakers are used which will be referred to as types 1 and 2. In type 1 the cone centering diaphragm is cemented to a fixed ring, while in type 2 the centering diaphragm is cemented to an adjustable ring. Replacement of cone in either type is identical. Centering of cone for type 1 loudspeaker is made with three narrow celluloid or paper feelers after first removing the front dust cover and cutting free the cone centering diaphragm. The dust cover may be removed by a light application of acetone, using care not to allow the acetone to flow into the air gap. The centering diaphragm should be cemented in place after placement of feelers. Sufficient time should be allowed for the ambroid to set before removing feelers. Use ambroid to replace dust cover. Centering of cone for type 2 loudspeaker differs only in that it is not necessary to cut free the centering diaphragm, adjustment being made in the usual manner by means of screws on the adjustable cone centering ring.

Dynamic Amplifier Adjustment

It is essential that correct voltages and currents exist at the RCA-6L7 volume expander stage in order that the expanding function may take place in the proper manner. A screw-driver adjustment is accordingly provided to regulate the RCA-6L7 control grid No. 3 bias to the correct operating value. Two methods of adjustment are applicable. Either method requires a normal voltage of 310 volts across the filter output (electrolytic capacitor C220 to chassis). The one to be preferred (a) requires the use of an **RCA Stock No. 9633 Beat-Frequency Oscillator** or the equivalent, a 22-ohm resistor, two 120-ohm resistors, and a 1,000-ohm-per-volt a-c voltmeter (rectifier type) having ranges of 1, 5, and 10 volts. The less accurate method (b) requires the use of an **RCA Stock No. 12353 Split-Plate Adapter,** and a suitable d-c milliammeter. Both of these procedures are outlined below. It is necessary to turn the "Phono-Music-Speech" control to "Phono" position (clockwise) during this adjustment.

CAUTION: Before using either method, be sure that power-supply fuse is in proper position for the line voltage.

(a) Preferred Method.—Turn power switch off. Connect one 22-ohm and two 120-ohm resistors in series between the beat-frequency oscillator terminals (upper "250" and "CT") with the 22-ohm resistor connected to "CT." Calibrate the beat-frequency oscillator, adjust it to 1,000 cycles, and reduce its output. Connect the 1,000-ohm-per-volt a-c voltmeter (1-volt range) to the beat-frequency oscillator terminals (upper "250" and "CT"). Remove male plugs on "Phono Input Cable" and "Exp.-Off Switch Cable" from the apron of the dynamic amplifier (see figure 10). Connect a lead through a 0.1 mfd. capacitor from the grid cap of the RCA-6L7 (tube No. 10, grid-cap lead in place) to the junction of the 22-ohm and 120-ohm resistors. Connect beat-frequency oscillator terminal "CT" to the dynamic amplifier chassis.

Adjust beat-frequency oscillator output until the voltmeter reads exactly 1.0 volt. Remove the voltmeter leads from beat-frequency oscillator terminals without disturbing oscillator adjustments. Set the voltmeter to its 5-volt range and connect it across the loudspeaker voice coil.

Set the "Dynamic Amplifier" control to extreme counter-clockwise position and "Fidelity" control to extreme clockwise position. Turn on power switch and allow a few minutes for the instrument to become stabilized. Adjust the expander-bias control R204 (screw-driver adjustment top-center amplifier chassis, see figure 7) until the voltmeter reads 2.4 volts.

To check the operation of the volume expander, first change the voltmeter to its 10-volt range (leaving meter attached to voice coil) and then connect a lead from the junction of the two 120-ohm resistors to the grid cap of the RCA-6F5 expander amplifier (grid-cap lead removed). The voltmeter should now read from 6 to 9 volts if the expander is operating properly.

After replacing the "Exp.-Off Switch Cable"—plug in amplifier, turning "Dynamic Amplifier" control to "Off" position, removing lead from junction of the two 120-ohm resistors, and replacing the grid-cap lead on the RCA-6F5 tube, the voltmeter should read approximately 4 volts.

(b) Alternate Method.—Turn power switch off. Place **RCA Stock No. 12353 Split-Plate Adapter** under the RCA-6L7 volume expander. Connect a suitable d-c milliammeter to the adapter. Turn both the "Phonograph Volume" and "Dynamic Amplifier" controls to their extreme counter-clockwise positions and remove "Exp.-Off Switch Cable"—plug from apron of the dynamic amplifier (see figure 10). Turn on power switch and allow a few minutes for the instrument to become stabilized. Adjust "Expander Bias" control R204 to give one milliampere of plate current with no signal input to the dynamic amplifier.

Mechanical Specifications

Height		43 inches
Width		35⅝ inches
Depth		22 7/16 inches
Weight (net)		209 pounds
Weight (shipping)		297 pounds
Chassis Base Dimensions	(Amplifier) 16¼ x 7½ x 2⅞ inches	(Radio) 21 x 10½ x 3¼ inches
Over-all Chassis Height	(Amplifier) 8 inches	(Radio) 11½ inches
Operating Controls.. Radio Panel	(1) Phono — Music-Speech, (2) Volume — Power, (3) Tuning, (4) Range Selector, (5) Manual-Electric-Remote, (6) Fidelity	
Operating Controls.. Phono Compartment	(1) Phonograph Volume, (2) Dynamic Amplifier, (3) Motor Switch, (4) Index	
Tuning Drive Ratios (manual)		10 to 1 and 50 to 1

©John F. Rider, Publisher

RCA MFG. CO., INC.

ELECTRIC TUNING

MODEL U109
Tuner Mechanism
Principles, Adjustments

Principle of Operation

The electric tuning mechanism consists essentially of a quick engaging and dis-engaging reversible electric motor, tuning condenser driving gear train, and eight mechanically interlocked (pushing one button releases all others) station selector push buttons respectively wired to eight adjustable station selector contactor discs (each with a motor stopping insulated segment) mounted on a drum which is direct-coupled to the gang tuning condenser shaft. The arrangement permits any one of eight pre-determined stations to be electrically tuned in by merely touching the correct push button.

The operation may be more readily understood by reference to figures 1, 5, and 8. When the motor is not energized, the armature is pushed to the rear or slightly out of the magnetic center by tension of contact spring "C" and the motor shaft is dis-engaged from the driving gear train. Pressing in any one of the eight push buttons will complete the motor circuit through a station selector contactor disc, assuming that the "Manual-Electric-Remote" switch is in "Electric" position and that the insulated segment in the contactor disc is not opposite its contactor. As the motor starts, the armature will be drawn forward, due to solenoid action, and the pin "F" on the end of its shaft will engage the arm "G" on the small main pinion gear, thereby driving the tuning mechanism. At the same time contact springs "E" and "D" will be grounded, causing suppression of audio amplification and automatic frequency control during the tuning cycle. The motor will continue to operate until the insulated segment in the selector disc breaks the motor circuit, whereupon spring "C" will instantly dis-engage the motor pin "F" from the arm "G" on the small pinion driving gear and open contacts "E" and "D." Pushing another button will cause the above mentioned cycle to be repeated except that the motor will be interrupted by the insulated segment on a corresponding disc. The discs are individually adjustable on a drum mechanism, providing a choice of eight "Electric Tuned" "Broadcast" stations. The arrangement of the motor is such that its rotation will continue in the same direction regardless of the number of "Electric" tuning cycles until the tuning condenser approaches either full-out or full-in of mesh, whereupon lever "H" trips switch S9 which reverses the direction of rotation. A throw-out idler gear is link-coupled to the "Manual-Electric-Remote" control to disconnect the motor drive gear train when the control is thrown to "Manual" position.

Mechanism Adjustments

The electric tuning mechanism is designed to be as simple in construction and as fool proof in operation as is possible. In order to maintain the accurate results possible with this device care must be taken in effecting any repairs or adjustments. Reference should be made to figure 8 and the following:

A-F-C and A-F Amplification Suppression Switches.—This switch assembly is located on the motor bracket and closes due to solenoid action of motor armature. Before attempting switch adjustment, loosen "Tilt Compensating Spring" adjusting screws (rear of tuning-motor bracket) and move spring to extreme travel away from motor armature shaft. The tension of the long contact spring "C" is important in bringing about quick dis-engagement of the motor and in permitting the motor to pull into mesh with the drive mechanism. Normal adjustment is attained when the short springs "D" and "E" are aligned exactly straight with contact points separated approximately 1/32 of an inch and with the spring "C" spaced approximately 7/32 of an inch from spring "D" at the point of contact. If necessary, in order to obtain positive pull-in

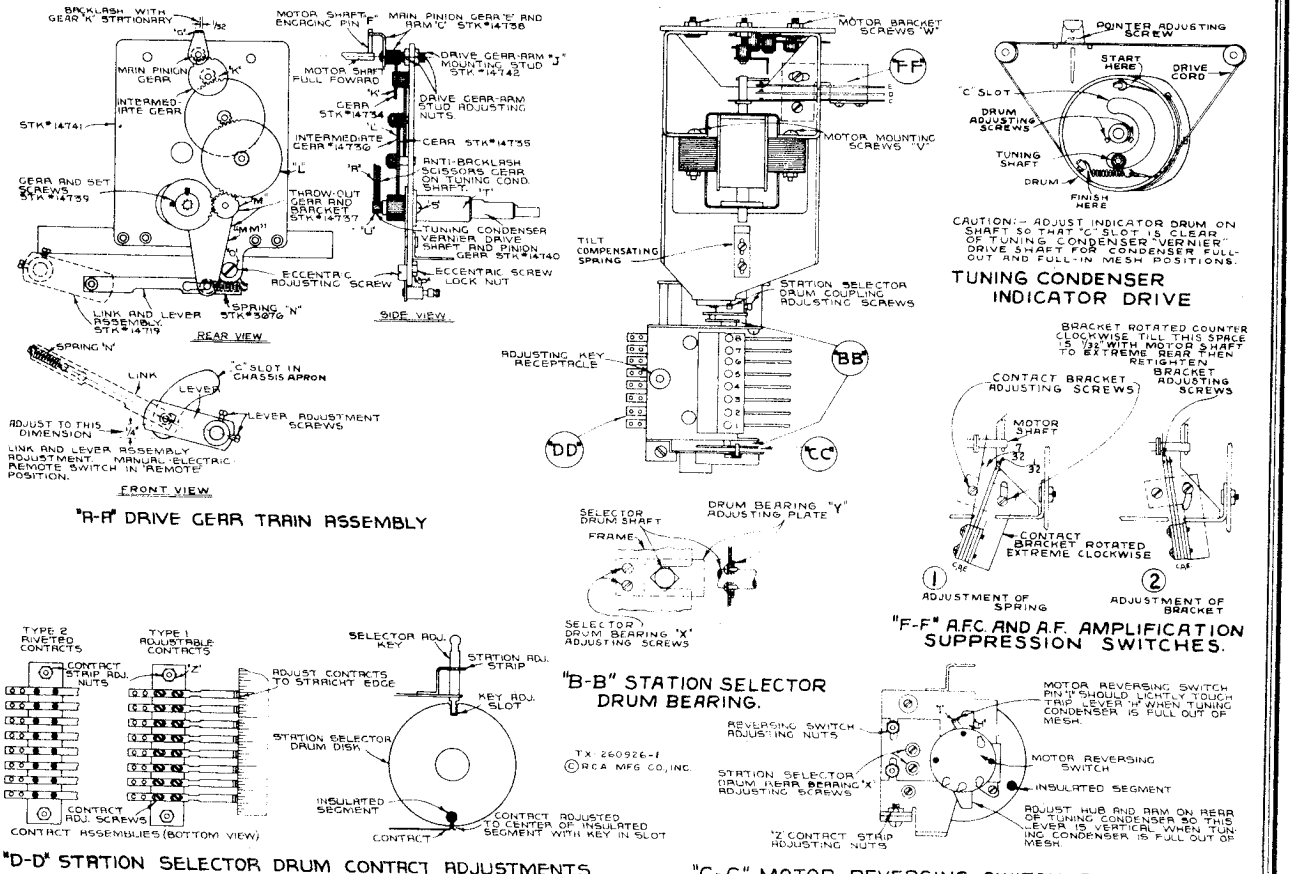

Figure 8—"Electric Tuning" Mechanism Adjustments

©John F. Rider, Publisher

and quick dis-engagement of the motor, the tension of spring "C" should be increased or decreased by bending. This action should be checked with the front apron of the chassis raised two inches higher than the rear. Contacts of the switch must be kept clean. Crocus cloth or a relay burnisher may be used for this purpose.

Tilt Compensating Spring.—The function of this spring is to compensate for the force of gravity, acting to the rear, on the tuning motor armature when the chassis is tilted as mounted in cabinet. The "Tilt Compensating Spring" is located on the rear of the tuning-motor bracket. After completion of adjustment "A-F-C and A-F Amplification Suppression Switches," raise the front apron of chassis six inches higher than the rear, and then adjust spring by means of its elongated mounting holes until the pin "F" on the motor shaft will pull in and remain in mesh with the arm "G" on the pinion when a push button is pressed. This adjustment should be made with the lowest power-supply voltage that will be encountered at the installation.

Motor Reversing Switch.—It is necessary to automatically stop and reverse the drive motor before the tuning condenser reaches the ends of its travel. Approximately 175 degrees of sweep is required, and the reversal must take place above 1,700 kc and below 540 kc but not too near the limits of the scale. The coupling between the station selector drum and the tuning condenser shaft should be attached so that the reversing switch trip lever "H" is exactly vertical when the condenser is full-out of mesh. There should be 1/32 of an inch clearance between the end of the condenser shaft and the selector drum shaft. While the trip lever is in this position the reversing switch bracket should be adjusted by means of its elongated mounting holes until the switch pin "I" just lightly touches trip lever "H."

Main Pinion Gear.—Clearance between the small high-speed pinion gear "E" and the intermediate gear "K" determines the amount of mechanical noise produced. Correct adjustment will give approximately 1/32 of an inch movement of back lash at the end of pinion arm "G" when gear "K" is held stationary. Arm "G" must also be adjusted for correct mesh with motor shaft drive pin "F." With the motor shaft completely forward and pinion "E" tight against its front bearing, the pinion mounting stud "J" should be adjusted so that pin "F" meshes its full thickness with the rotating arm "G." An increase of this mesh will increase over travel on tuning while a decrease of mesh will decrease the over travel. The elongated hole in the front bracket allows sufficient movement of the mounting stud "J" to permit above mentioned gear mesh adjustment.

"Manual-Electric-Remote" Changeover. — (1) Link and lever adjustment—To properly line up the mechanical link between the switch shaft and throw-out gear bracket "MM," the set screws holding the link lever on the switch shaft must be loosened, the switch turned to the "Remote" position (extreme left) and the link lever revolved until the distance between the bottom of its link-connecting pin (extends through chassis apron) and the bottom of the "C" slot, in front apron of chassis, is exactly 1/4 of an inch. If this adjustment is not properly made, correct operation of "Electric" or "Remote" tuning will not result. (2) Throw-out Gear Adjustment—To obtain smooth operation on "Electric" or "Remote" positions it is important that the proper clearance is maintained between the throw-out gear "M" and the intermediate gear "L." With the "Manual-Electric-Remote" control thrown to "Remote" position (extreme left) adjust the mesh between these gears by means of the eccentric screw "O" and lock nut "P" on the throw-out gear bracket "MM" until there is approximately 1/64 of an inch backlash of gear "L" when gear "M" is held stationary.

Vernier Tuning.—In case it becomes necessary to remove tuning condenser drive shaft "T," it should be replaced by sliding anti-backlash gear "R" on condenser shaft apart so that compression amounting to one tooth on the gear is obtained in the springs. Adjust mesh of gear "R" with pinion gear "U" on vernier shaft before tightening screws "S" so that smooth tuning is obtained throughout the range.

Motor Alignment.—The motor shaft must be exactly aligned with the axis of the pinion gear with which it engages. This may be adjusted by loosening the mounting screws "V" of the motor and aligning shaft by sight. Correct alignment may be tested by slowly rotating motor and observing the relation between the pin "F" of the motor shaft and the arm "G" on the pinion. The relation of the two should remain the same throughout the revolution. Additional movement for adjustment may be obtained by the motor bracket screws "W" if necessary.

Station Selector Drum.—(1) Bearing Adjustment—The selector drum may be removed by unscrewing the two bearing adjusting screws "X" on the front and rear bearings and sliding shaft out of slots on frame. To replace drum, the reverse procedure should be followed holding bearing adjusting plates "Y" firmly against the shaft and tightening adjusting screws. (2) Contact adjustment—Two types of contact strips are used. They are designated on figure 8, as types 1 and 2, on which the individual contacts are respectively adjustable and fixed. On type 1, the individual contacts should be adjusted by setting the end contact springs near the mid-position of their travel and aligning the remaining springs to them by means of a straight edge. Either type of contact strip should be adjusted to the selector drum by placing two selector adjusting keys in the station adjustment strip, positions 1 and 8, loosening contact strip adjusting nuts "Z" and shifting the contact strip until the end contacts are exactly centered on the respective disc insulating segments. More accurate adjustment may be made by silhouetting the point of contact with a piece of white paper held behind the contact. Adjustment will be facilitated by removing complete assembly from rear of tuning condenser by unscrewing the three mounting screws. Contacts and discs must be kept free of dirt, filings, and other extraneous matter.

Lubrication. — The dial pointer slide should be greased with petrolatum. This same lubrication should be applied lightly to all gear faces of the drive mechanism and sparingly with a cloth to the station selector discs. Any good household oil, such as "3-IN-ONE," is suitable for the motor shaft bearings. A light grade of engine oil should be used for all gear bearings. Medium viscosity engine oil, similar to "PYROIL" (B), should be applied between the thrust washers on the motor shaft. "CASTORDAG," a mixture of graphite and castor oil, is recommended for use at the selector drum end-bearing slots and at the bearings of cable pulleys.

Station Adjustment

Any eight stations may be chosen for "Electric" tuning. Remove the two escutcheon plates from the side of the dial, place proper call letter labels in the celluloid windows, and replace escutcheons. Turn the power on and proceed to set up the "Electric" tuning as follows:

1. Set Range Selector to "Broadcast."
2. Turn "Manual-Electric-Remote" control to "Electric."
3. Turn Fidelity control counter-clockwise.
4. Press push button No. 1 and wait until station pointer comes to rest.
5. Turn the "Manual - Electric - Remote" control to "Manual."
6. Remove adjusting key from receptacle on top of station selector drum mechanism.
7. Insert key in position marked, "1" in station adjustment strip and push the key all the way down to properly fit in slot in disc.
8. Tune the receiver very carefully by means of the manual tuning knob and the "Magic Eye," to station chosen for No. 1.
9. Remove key.
10. Turn the "Manual-Electric-Remote" control to "Electric."

Button No. 1 is now properly set for "Electric" tuning. Proceed similarly for the other seven push buttons, matching each station on the dial with the same number on the station adjustment strip. Repeat the above steps but place the key respectively in positions 2, 3, 4, etc., and in each case tune to the proper station. Now when you press a button the desired station will be tuned in electrically.

Note.—In the event that all the push-button switches are locked "in" at once, they may be released by pressing either the upper left-hand or the lower right-hand push buttons (Nos. 1 or 8) in farther than would ordinarily be required.

Armchair Control

When a Model G-8 armchair control is attached to the receiver as shown in figure 5 it duplicates the action of the push buttons on the front panel when the "Manual-Electric-Remote" control is turned to "Remote" position.

©John F. Rider, Publisher

RCA MFG. CO., INC.

Calibrate the tuning dial by adjusting dial pointer to the left ends of horizontal calibration lines with the gang tuning-condenser plates in full-mesh position. This is a screw-driver adjustment.

The "Manual-Electric-Remote" switch should be turned to "Manual" (clockwise) during alignment unless otherwise specified.

CAUTION.—The magnetite core screw L22 on the bottom of the 4th i-f transformer has been accurately adjusted, for an exact electrical balance of coil L22 to center tap, during manufacture and **should not be disturbed.** However, if for any reason the adjustment has been moved from its original position, it will be necessary to mechanically adjust this screw until the end of the stud protrudes exactly ⅛ of an inch (four threads exposed) above the brass bushing prior to any alignment operations.

Perform alignment in proper order, tabulated below, starting with No. 1 and following all operations across, then No. 2, etc. A-f-c discriminator adjustments should follow r-f and i-f adjustments tabulated below. Adjustment locations are shown on figures 4 and 6.

Cathode-ray alignment is preferable; the connections to the chassis are shown on figure 2. If an output indicator is used, connect it across the loudspeaker voice-coil and advance the receiver volume control to full-volume position.

Connect the "low" output terminal of the test oscillator to the receiver chassis for all alignment operations. Regulate the output of the test oscillator so that minimum signal is applied to the receiver to obtain an observable output indication. This will avoid a-v-c action.

The term "Dummy antenna" means the device which must be connected between the "high" test-oscillator output and the point of connection to the receiver in order to obtain ideal alignment. "No signal, 550-750 kc" means that the receiver should be tuned to a point between 550 and 750 kc where no signal or interference is received from a station or local (heterodyne) oscillator.

For further details on alignment, refer to booklet "RCA Victor Receiver Alignment."

A-F-C Discriminator Adjustments.—These adjustments are rather critical and should be performed with extreme care. Improper adjustment may result in complete failure of the oscillator control tube to function or else may cause it to detune the oscillator instead of tuning it to the signal. It is assumed that the magnetite core adjusting screw L23 (top of 4th i-f transformer) has been turned all the way out (extreme counter-clockwise) during the preceding tabulated adjustments. Adjustments are as follows: Remove spring "N" on link and arm assembly which connects the "Manual-Electric-Remote" switch shaft to the throw-out gear bracket. Turn "Fidelity" control counter-clockwise. Connect antenna to receiver antenna "A" terminal. With the "Manual-Electric-Remote" switch in "Manual" (clockwise) position, tune in a strong local station near 600 kc or the low-frequency end of the "A" band as accurately as possible by means of the tuning tube "Magic Eye." The most accurate adjustment will be obtained by adjusting the "vernier" tuning knob mid-way between the two points where the eye just appears to start to open. This will place the generated i-f carrier signal frequency exactly in the center of the i-f amplifier response curve (should be 460 kc if i-f amplifier was properly aligned) and is the frequency to which the a-f-c discriminator (4th i-f transformer) should be tuned to resonance. Without disturbing any of the receiver adjustments, place the "high" test-oscillator lead about ¾ of an inch from the grid cap lead of the RCA-6K7, 1st i-f amplifier tube, adjust the test-oscillator output to maximum, turn test-oscillator "Modulation" off, and carefully zero-beat the test-oscillator frequency (approximately 460 kc) with the i-f carrier signal. Avoid placing the test-oscillator lead nearer to the grid cap lead than specified above, as doing so will tend to detune the i-f amplifier. It may be necessary to reduce the local station signal, during this operation, by shortening antenna lead or grounding antenna "A" terminal to chassis in order to increase the loudness of the beat note sufficiently for accurate zero-beat adjustment.

Throw "Manual-Electric-Remote" switch to "Electric" (center) position. A high whistle or beat note will now be heard. Turn the magnetite core screw L23 (top of 4th i-f transformer) slowly clockwise. As this screw is turned, the beat note will first increase to a high audio frequency and will then decrease to a **zero-beat** and then increase in frequency again. The point of exact **zero-beat** is the position for correct adjustment of the discriminator. Zero-beat should also still exist when the "Manual-Electric-Remote" switch is thrown back to "Manual" position. The adjustment is now complete and may be checked by slightly detuning the receiver above and below the local station frequency with the "Manual-Electric-Remote" in "Manual" position, switching to "Electric" position, and noting the oscillator pull-in. Replace spring "N."

Order of Alignment	Test Oscillator			Range-Selector	Receiver Dial Setting	Circuit to Adjust	Adjustment Symbols	Adjust to Obtain
	Connection to Receiver	Dummy Antenna	Frequency Setting					
1	——	——	——	——	——	4th I-F Trans.	L23	Turn Extreme Counter-clockwise
2	6K7 I-F Grid Cap	.001 Mfd.	460 kc	"A" Left	No Signal 550-750 kc	3rd I-F Trans.	L20 and L21	Max. (peak)
3	6K7 I-F Grid Cap	.001 Mfd.	460 kc	"A"	No Signal 550-750 kc	2nd I-F Trans.	L18 and L19	Max. (peak)
4	6L7 Det. Grid Cap	.001 Mfd.	460 kc	"A"	No Signal 550-750 kc	1st I-F Trans.	L15 and L16	Max. (peak)
5	Ant.	300 Ohms	20,000 kc	"C" Right	20,000 kc	"C" Osc.	C43	Max. (peak)*
6	Ant.	300 Ohms	20,000 kc	"C"	Rock thru 20,000 kc	"C" Det.	C8	Max. (peak)†
7	Ant.	300 Ohms	20,000 kc	"C"	20,000 kc	"C" Ant.	C2	Max. (peak)‡
8	Ant.	300 Ohms	6,000 kc	"B" Center	6,000 kc	"B" Osc.	C45	Max. (peak)*
9	Ant.	200 Mmfd.	600 kc	"A" Left	600 kc	"A" Osc.	L14	Max. (peak)
10	Ant.	200 Mmfd.	1,500 kc	"A"	1,500 kc	"A" Osc.	C51	Max. (peak)
11	Ant.	200 Mmfd.	600 kc	"A"	600 kc	"A" Osc.	L14	Max. (peak)
12	Ant.	200 Mmfd.	1,500 kc	"A"	1,500 kc	"A" Osc.	C51	Max. (peak)
13	Proceed to A-F-C Discriminator Adjustments Outlined Below							

* Use minimum capacity peak if two peaks can be obtained.
† Use maximum capacity peak if two peaks can be obtained.
‡ After this adjustment, check for image signal by shifting receiver dial to 19,080 kc.

©John F. Rider, Publisher

MODEL U109
Assembly Wiring
Compensator
Connections

RCA MFG. CO., INC.

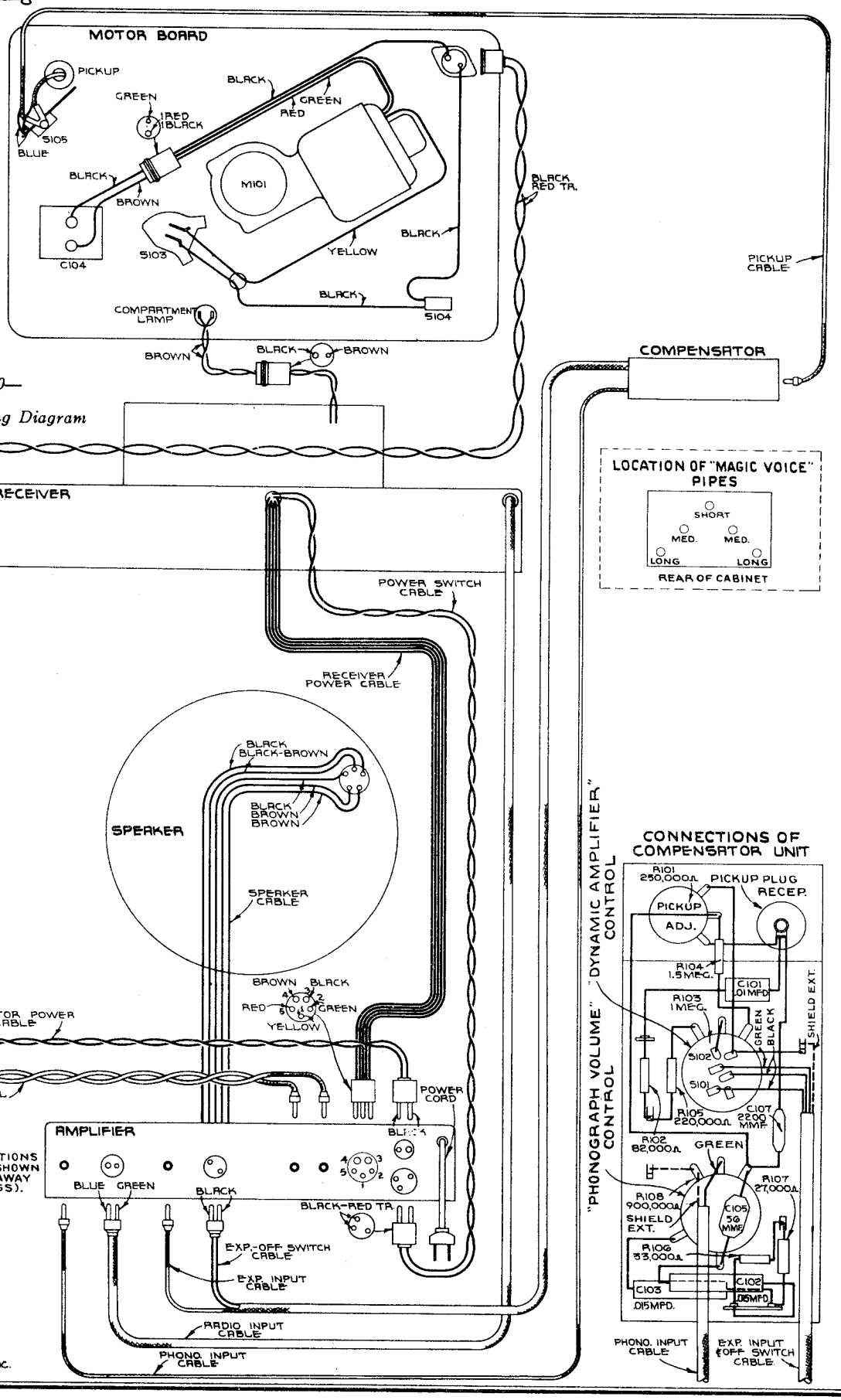

Figure 10—
Assembly Wiring Diagram

Trademarks "Radiotron," "Magic Eye," "Magic Voice," "Magic Brain" Reg. U. S. Pat. Off. by RCA Mfg. Co., Inc.

Copyright, 1937, RCA Manufacturing Co., Inc.

©RCA MFG. CO., INC. T-70839-0

©John F. Rider, Publisher

RCA MFG. CO., INC.

MODEL U109
Automatic Record Changer
Views

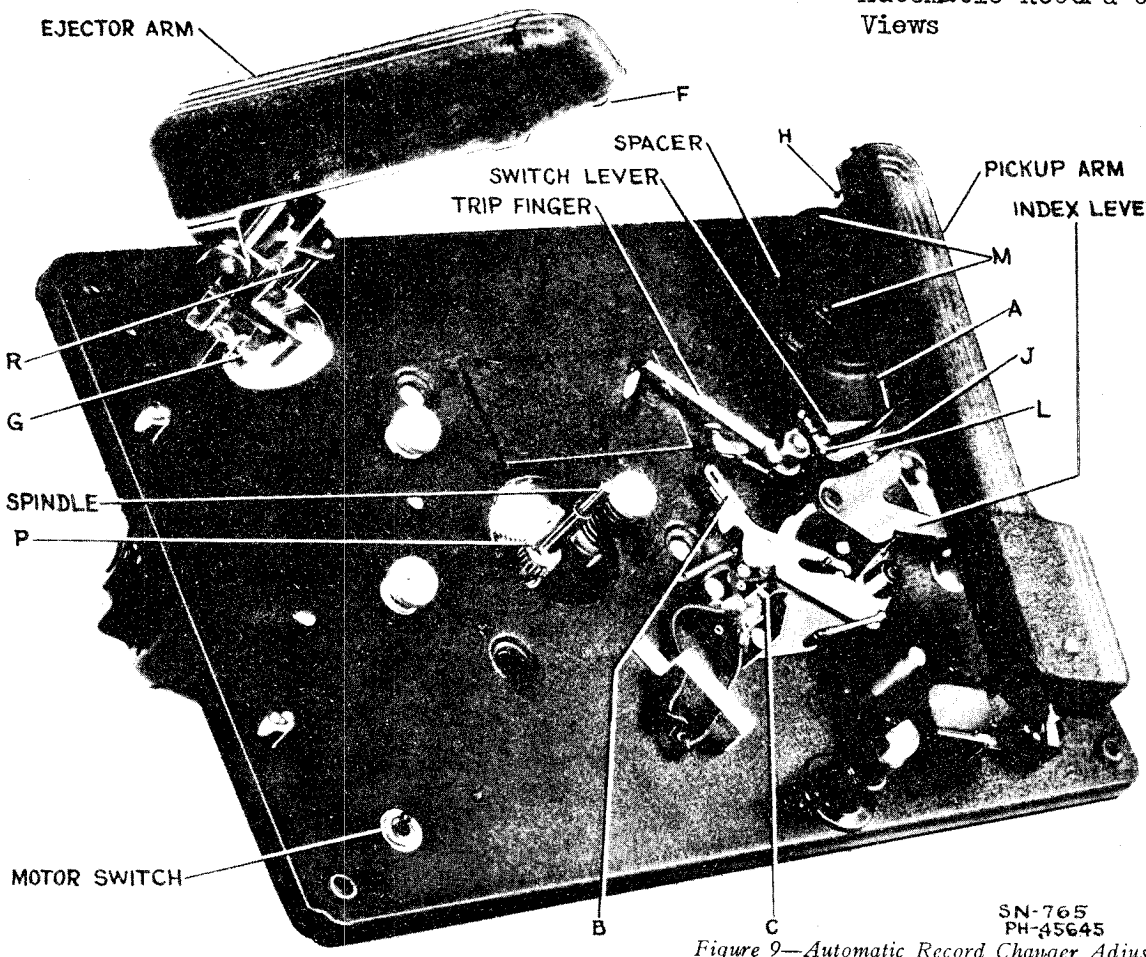

Figure 9—Automatic Record Changer Adjustments (Top and bottom views)

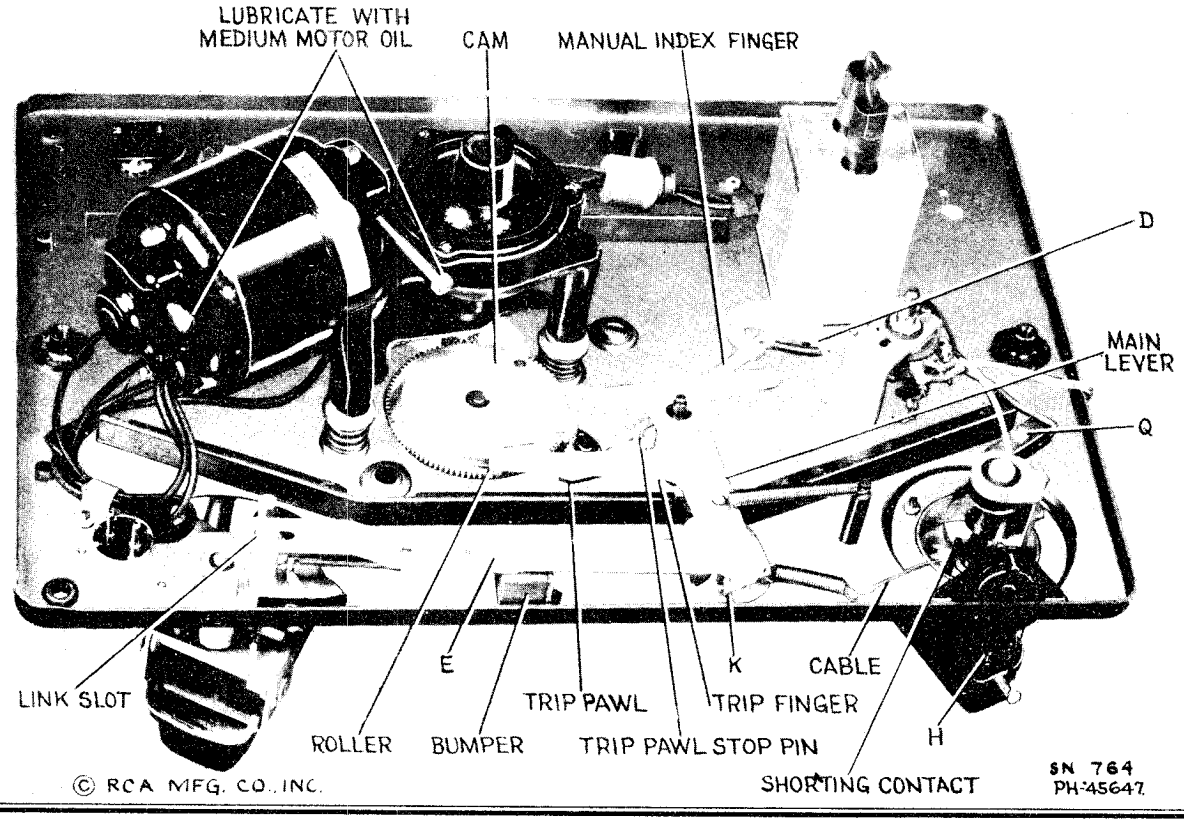

©John F. Rider, Publisher

MODEL U109 RCA MFG. CO., INC. Adjustments, Hints
Automatic Record Changer Pick-up Data

The record changing mechanism is designed to be simple and fool-proof. Under normal operating conditions, service difficulties should be negligible. Occasionally, however, certain adjustments may be required. It is important to refrain from forcing the mechanism if there is a tendency to bind or jam, since bent levers and possibly broken parts may result.

Record Changer Adjustments

Mount motor-board on a level support. Remove turntable and cover at right of turntable. Adjustment locations are designated on figure 9 as A, B, etc. The adjustments are explained under corresponding symbols below Perform adjustments in the following order:

A.—Trip rod "A" should be engaged in "Switch Lever" slot. Adjust trip rod "A" to obtain about ⅛ of an inch clearance from motor-board.

B.—Adjust "B" to the position shown.

C.—With "Index Lever" in "Manual" position, "Pickup Arm" rotated to extreme left, and switch tripped to open contacts "C," adjust contact points "C" by bending the stiff contact arm until points are opened 10 to 30 thousandths of an inch.

D.—With "Index Lever" in "Manual" position, release set screw "D" and force "Manual Index Finger" as far as it will go towards "Trip Pawl Stop Pin." Tighten set screw.

E.—Adjust at "E" to provide approximately 1/32 of an inch between outer end of "Link Slot" and screw when rubber "Bumper" is in contact with stop bracket.

F. and G.—Remove rubber silencer at "F" and adjust "F" and "G" so ejector tip "F" is in line with "Spindle." Longitudinal movement, with respect to "Ejector Arm," may be effected by loosening hex. head at "F." Lateral movement of "Ejector Arm" may be effected by adjustment "G."

H.—Adjust "H" so under side of pickup head can be raised 2½ inches above motor-board.

J.—Adjust screw "J" until friction will just force "Trip Finger" to move "Trip Pawl" when "Index Lever" is in "12" inch position.

N.—Adjust needle pressure by turning screw under center of "Pickup Arm" so that a force of 72 grams (2.5 ounces) is required to lift needle from record. Hook scale under needle screw to measure force.

K.—Adjustment "N" must be performed prior to this adjustment. With a 12-inch record on turntable, turn on "Motor Switch," place "Index Lever" to "12" position and adjust "K" so that "Cable" tension will allow needle to lower slowly on start of record at completion of eject cycle. Turn "Motor Switch" off after eject cycle is completed and check to see that "Cable" is slightly loose when "Pickup Arm" is moved against "Spindle." Replace turntable and put a needle in "Pickup."

L.—Adjust "L" so needle will drop into center of smooth portion at the start of a 12-inch record when "Index Lever" is in "12" inch position and "Pickup Arm" is to extreme right.

M.—Loosen three screws "M" and rotate "Spacer" until pointer on "Spacer" is in line with screw to right of "Pick-up Arm."

P.—Adjust turntable height by insertion or removal of thrust washers at "P" so ejector tip "F" will not eject bottom 12-inch record but will eject second from bottom record.

Q.—Adjust position of shorting switch at "Q" so switch closes when needle is just outside a 12-inch record.

R.—Adjust screw "R" upward just enough so that with one record on turntable and ejector tip "F" resting on record surface, there is 1/32 of an inch clearance between screw "R" and "Ejector Arm."

Record Changer Service Hints

1.—"Ejector Arm" goes through normal cycle but does not eject records. Adjust "F" and "G." See that "Spindle" slides freely.

2.—Ejects bottom record. Lower turntable by removing thrust washers at "P."

3.—Ejects records properly down to second from bottom of pile. Raise turntable by placing thrust washers at "P."

4.—Eject cycle does not start after needle reaches eccentric groove. Adjust "J" (turn screw clockwise).

5.—Eject cycle starts before eccentric record groove is reached. Adjust "J" (turn screw counter-clockwise). Set "Index Lever" to "12" inch or "10" inch position **after** starting to play record. Do not jar motor-board during automatic operation.

6.—Lateral movement of "Pickup Arm" has no control over starting and stopping. Adjust clearance of rod "A." See that rod "A" engages in slot of "Switch Lever."

7.—Fails to eject top record of a pile because "Ejector Arm" strikes record in returning to center at end of eject cycle. Adjust screw "R" upward to provide greater incline so that roller in "Ejector Arm" will roll back during cycle.

8.—Pickup strikes record during eject cycle. Adjust "K" and "H."

9.—Starts playing record several grooves in from beginning or needle misses record entirely. Adjust "L."

10.—Needle falls on smooth portion at start of record but does not move into playing groove. Adjust "M." Check to see that motor-board is level.

11.—Automatic stop does not operate after needle reaches eccentric groove. Adjust "B" and "C."

12.—Motor does not re-start when "Pickup" is returned to rest position. Adjust "C." See that switch mechanism parts move freely and springs are functioning.

13.—Starts eject cycle although set for "Manual" operation. Adjust "D."

14.—Noise in loudspeaker while changing needles. Clean "Shorting Contact" and adjust "Q."

15.—"Wow" in record reproduction.—Instrument should be warmed to about 65° F. Ejector tip should be centered and free to rotate (adjustments "F" and "G"). There should be no solid particles on gear teeth or in grease; no tendency to bind. Turntable plate should be in dynamic balance and "Spindle" should be straight. Proper lubrication is important.

Lubrication.—Clean motor gear-box thoroughly before re-greasing. Apply less than a tablespoonful of a grease, such as "Cities Service No. 7035-A1" or "Koolmotor Universal Trojan No. 1," directly on gears taking care to get none in rotor bearings. Put medium motor oil (S.A.E. No. 30) in the oil holes. Cover main gear and cam of automatic mechanism with a light grease such as "Socony-Vacuum No. 2." Any good house-hold oil, such as "3-IN-ONE" is suitable for the ejector-tip "F" bearing.

Pickup

An adjustment is provided to compensate for reduced sensitivity of the crystal pickup with age. Adjustment requires the use of a 1,000-ohm-per-volt a-c voltmeter (rectifier type, 10-volt range) and a frequency record. With the voltmeter connected across the loudspeaker voice coil, "Phonograph Volume" and "Fidelity" controls turned extreme clockwise, "Dynamic Amplifier" control turned counter-clockwise, and "Exp.-Off Switch Cable"-plug pulled out from apron of dynamic amplifier (see figure 10), adjust R101 (end of compensator unit) until an **RCA Victor Technical Purpose Record Cat. No. 84519-A or 84505-B** gives a voltmeter reading of 5 volts on 400 cycles. Adjustment of R101 will be facilitated by removing the compensator unit from the phonograph control panel, after removing control knobs and shaft bushing nuts. R101 should also be adjusted if pickup is replaced.

©John F. Rider, Publisher

RCA MFG. CO., INC.

MODEL U109
Parts List

Insist on genuine factory tested parts, which are readily identified and may be purchased from authorized dealers.

STOCK No.	DESCRIPTION
	RECEIVER ASSEMBLIES
14701	Arm—Hub and arm for operating band indicator shutter —located on range switch shaft
14726	Arm—Hub and arm, complete with set screws—connects station selector drum to rear of tuning condenser shaft
14517	Board—Antenna and ground terminal board
5237	Bushing—Variable condenser rubber mounting bushing
13656	Button—Plug button for detector coil shield
14725	Cable—Tuning tube cable and socket
12607	Cap—Shield cap for first or second I.F. transformer
12581	Cap—Shield cap for third or fourth I.F. transformer
11350	Cap—Grid contact cap
12884	Capacitor—Adjustable trimmer (long) (C2, C45, C51)
12714	Capacitor—Adjustable trimmer (medium) (C8, C43)
13200	Capacitor—10 Mmfd. (C52)
12723	Capacitor—56 Mmfd. (C30)
12813	Capacitor—82 Mmfd. (C6)
12720	Capacitor—100 Mmfd. (C26, C60)
12404	Capacitor—120 Mmfd. (C24)
12724	Capacitor—120 Mmfd. (C54)
14712	Capacitor—180 Mmfd. (C21, C23)
14711	Capacitor—220 Mmfd. (C17, C18)
12952	Capacitor—330 Mmfd. (C3, C59)
14710	Capacitor—430 Mmfd. (C11, C15)
13052	Capacitor—470 Mmfd. (C48)
14724	Capacitor—560 Mmfd. (C4)
14723	Capacitor—690 Mmfd. (C47)
13762	Capacitor—1,500 Mmfd. (C69)
12729	Capacitor—1,550 Mmfd. (C46)
12897	Capacitor—4,700 Mmfd. (C5, C49)
14722	Capacitor—5,100 Mmfd. (C44)
13608	Capacitor—.0025 Mfd. (C65)
4838	Capacitor—.005 Mfd. (C64)
30103	Capacitor Pack—Comprising one .005 Mfd., one .015 Mfd. capacitors, one 27,000 ohm and one 56,000 ohm resistors (C31, C32, R23, R24)
13138	Capacitor—.01 Mfd. (C12, C13, C22)
4870	Capacitor—.025 Mfd. (C28)
4886	Capacitor—.05 Mfd. (C20, C56)
4839	Capacitor—0.1 Mfd. (C9, C10, C14)
12484	Capacitor—0.25 Mfd. (C16, C19, C55)
12741	Capacitor—0.5 Mfd. (C27, two in parallel)
12682	Capacitor—10 Mfd. (C66)
14773	Capacitor—16 Mfd. (C50, C68)
14372	Coil—Antenna coil and shield (L1, L2, L3, L4)
14414	Coil—Detector coil and shield (L5, L6, L7, L8, L9, L10)
14713	Coil—Oscillator coil and shield (L11, L12, L13, L14)
14727	Condenser—3-gang variable tuning condenser, complete with gear train (C1, C7, C53)
14733	Contact—Spring contact for engaging discs in station selector drum ("type 1" contact assembly)
30365	Contact—Comprising eight spring contacts assembled on insulating strip for engaging discs in station selector drum ("type 2" contact assembly)
14699	Cord—Indicator pointer drive cord
12006	Core—Adjustable core and stud for I.F. transformers
12800	Core—Adjustable core and stud assembly for oscillator coil
14717	Dial—Station selector dial scale
14740	Drive—Tuning condenser vernier drive shaft and pinion gear
14698	Drum—Drum for indicator drive cord—fastens on tuning condenser shaft
14731	Drum—Station selector drum rotor—comprising eight station-selector contactor discs assembled on shaft
13612	Filter Pack—Comprising two 0.43 Henry chokes, two 560 Mmfd., one 2,200 Mmfd. and one 1,000 Mmfd. capacitors (L30, L31, C61, C62, C63, C67)
14738	Gear—Drive pinion gear and arm
14739	Gear—Drive gear and set screws—located on tuning condenser knob shaft
14734	Gear—Intermediate gear assembly—comprising one .749" O.D.—34 tooth-gear and one .291" O.D.—12 tooth pinion assembled
14735	Gear—Intermediate gear assembly—comprising one 1.541" O.D.—72 tooth-gear and one .291" O.D.—12 tooth pinion assembled
14736	Gear—Intermediate gear assembly—comprising one 1.541" O.D.—72 tooth-gear and one hub assembled
14737	Gear—Throw-out gear and bracket
14716	Holder—Dial scale holder and reflector, complete with holding springs for band indicating shutter
14715	Indicator—Station selector indicator pointer and support
5226	Lamp—Dial or indicating lamp
14719	Link—Link and lever assembly
14730	Motor—Tuning drive motor for 25 cycle models only (M1)
14729	Motor—Tuning drive motor for 60 cycle models only (M1)
14028	Nut—Jamb nut for trimmers, Stock Nos. 12714 and 12884
12471	Plate—Mounting plate for cushion socket—less socket
14741	Plate—Tuning condenser front plate and studs assembled for mounting drive gears
14697	Pulley—Indicator pointer cable pulley
13988	Resistor—10 ohms, carbon type, ½ watt (R40)
11932	Resistor—330 ohms, carbon type, 1/10 watt (R4)
13250	Resistor—330 ohms, carbon type, ½ watt (R14)
5050	Resistor—470 ohms, carbon type, ½ watt (R39)
14837	Resistor—1,000 ohms, carbon type, 1/10 watt (R6, R15, R43)
14720	Resistor—1,000 ohms, carbon type, ½ watt (R2, R8)
13737	Resistor—3,300 ohms, carbon type, ½ watt (R47)
11647	Resistor—5,600 ohms, carbon type, ½ watt (R48)
5114	Resistor—15,000 ohms, carbon type, 1 watt (R54)
14078	Resistor—18,000 ohms, carbon type, 1 watt (R34)
14721	Resistor—22,000 ohms, carbon type, ½ watt (R13, R49)
11300	Resistor—33,000 ohms, carbon type, 1/10 watt (R42)
13735	Resistor—33,000 ohms, carbon type, ½ watt (R5)
5145	Resistor—100,000 ohms, carbon type, ½ watt (R7)
30552	Resistor—120,000 ohms, special, carbon type, ½ watt (R41)
5158	Resistor—220,000 ohms, carbon type, ½ watt (R45)
11323	Resistor—270,000 ohms, carbon type, ½ watt (R46)
11172	Resistor—470,000 ohms, carbon type, ½ watt (R17, R20)
11397	Resistor—560,000 ohms, carbon type, 1/10 watt (R1, R3)
12013	Resistor—1 megohm, carbon type, 1/10 watt (R36)
13730	Resistor—1 megohm, carbon type, ½ watt (R44)
11626	Resistor—2.2 megohms, carbon type, ½ watt (R18, R21)
13732	Resistor—10 megohms, carbon type, ½ watt (R35)
14845	Resistor—Voltage divider—comprising two 1,000 ohm, one 3,400 ohm and one 4,000 ohm sections (R50, R51, R52, R53)
14695	Rod—Tie rod for joining lockplate pawls on station selector push-button switches
4669	Screw—No. 8-32 x 5/32 square head set screw for arm, Stock No. 14701, or link, Stock No. 14719, or drum, Stock No. 14693
12418	Screw—No. 8-32 x 3/16 milled head set screw for gear, Stock No. 14739
14848	Selector—Station selector drum mechanism—comprising station-selector contactor discs, spring contacts and motor reversing switch assembled in metal frame
14374	Shield—Antenna or detector coil shield
14375	Shield—Oscillator coil shield
12008	Shield—I.F. transformer shield
14718	Shutter—Band indicating shutter and arm assembly
14696	Slider—Indicator pointer holder and spring
11488	Socket—2-contact female socket for compartment lamp power cable
11196	Socket—8-contact 6K7, 6L7, 6J7, 6H6 or 6C5 Radiotron socket
14114	Socket—Dial or indicating lamp socket
12007	Spring—Retaining spring for core, Stock No. 12006
3676	Spring—Tension spring for link and lever, Stock No. 14719
13638	Spring—Tension spring for cord, Stock No. 14699
14694	Spring—Tension spring for lockplate pawl on station selector push-button switches
14742	Stud—Mounting stud for gear and arm, Stock No. 14738
14702	Switch—"Manual-Electric-Remote" switch (S7, S12, S15)
14844	Switch—"Phono-Music-Speech" switch (S18)
14732	Switch—Motor reversing switch and mounting plate for station selector (S9)
14704	Switch—Range switch (S2, S3, S4, S6)
14728	Switch—A-F-C and A-F amplification suppression switch (S14)
14693	Switch—Station selector button switch—comprising four contacts and corresponding lockplates, completely assembled on insulating strips
14836	Tone Control—"Fidelity" control (R214, S5)
14706	Transformer—First I.F. transformer (L15, L16, L17, C11, C15)
14707	Transformer—Second I.F. transformer (L18, L19, L29, C17, C18)
14708	Transformer—Third I.F. transformer (L20, L21, C21, C23)
14709	Transformer—Fourth I.F. transformer (L22, L23, L24, C24)
14834	Transformer—Tuning motor transformer, 105-125 volts, 50-60 cycle (T4)
30102	Transformer—Tuning motor transformer, 105-125 volts, 25-60 cycle (T4)
14835	Volume Control—Radio volume control and power switch (R22, S201)
	AMPLIFIER ASSEMBLIES
14272	Bracket—Expander control mounting bracket
12511	Cap—Grid contact cap
12110	Cap—Top shield cap for 6L7 Radiotron
12720	Capacitor—100 Mmfd. (C210, C211)
14831	Capacitor—820 Mmfd. (C222)
5107	Capacitor—.0025 Mfd. (C209)
5005	Capacitor—.0035 Mfd. (C212)
4838	Capacitor—.005 Mfd. (C213, C214)
13138	Capacitor—.01 Mfd. (C215)
4886	Capacitor—.05 Mfd. (C205)
4518	Capacitor—.05 Mfd. (C201)
4839	Capacitor—0.1 Mfd. (C218, two in parallel)
12484	Capacitor—0.25 Mfd. (C208, C217)
12741	Capacitor—0.5 Mfd. (C202)
11203	Capacitor—10 Mfd. (C220)
5212	Capacitor—16 Mfd. (C204, C206)
11496	Capacitor—18 Mfd. (C219)
14273	Capacitor—Pack comprising one 20 mfd. and one 10 mfd. sections (C203, C207)
14531	Capacitor—25 Mfd. (C221)
11320	Coil—Choke coil (L204)
5240	Cover—Fuse mounting cover
12468	Expander Control (R204)
10907	Fuse—3 amp. (F201)
5239	Mounting—Fuse mounting—110 volt
12471	Plate—6L7 socket mounting plate assembly—less socket, Stock No. 11196
12466	Reactor—Filter reactor (L201)
14795	Resistor—0.27 ohms, resisto-fuse, 1.2 ampere (R223)
14281	Resistor—68 ohms, insulated, ½ watt (R222)
13454	Resistor—270 ohms, insulated, ½ watt (R202)
12194	Resistor—1,800 ohms, insulated, ½ watt (R212)
11298	Resistor—5,600 ohms, carbon type, 1 watt (R210)
11726	Resistor—6,800 ohms, carbon type, ½ watt (R224)
11332	Resistor—22,000 ohms, carbon type, 1 watt (R209)
12487	Resistor—33,000 ohms, carbon type, 2 watt (R205)
12875	Resistor—56,000 ohms, carbon type, 1 watt (R213)

©John F. Rider, Publisher

MODEL U109
Parts List

RCA MFG. CO., INC.

STOCK No.	DESCRIPTION
5029	Resistor—56,000 ohms, carbon type, ½ watt (R220)
5145	Resistor—100,000 ohms, carbon type, ½ watt (R219)
11323	Resistor—270,000 ohms, carbon type, ½ watt (R206)
5035	Resistor—560,000 ohms, carbon type, ½ watt (R211)
12486	Resistor—560,000 ohms, insulated, ½ watt (R207, R208, R215)
12200	Resistor—1 megohm, insulated, ½ watt (R201)
14752	Resistor—2.7 megohms, insulated, ½ watt (R203)
14275	Socket—2-contact female socket for phonograph motor power supply
14276	Socket—2-contact female socket for "expander-off" switch
14280	Socket—2-contact female socket and clinching plate for radio input
14277	Socket—3-contact female socket for power switch or tuning motor power supply
4794	Socket—4-contact 2A3 or 5Z3 Radiotron socket
14279	Socket—5-contact female socket for chassis power supply
11197	Socket—6-contact 6C5 Radiotron socket
11198	Socket—7-contact 6H6 Radiotron socket
11196	Socket—8-contact 6L7 or 6F5 Radiotron socket
14274	Socket—Single contact female socket and plate for phonograph or expander input
14278	Socket—Single contact socket and plate for tone control
13964	Transformer—Interstage driver transformer (T202)
14271	Transformer—Power transformer, 105-125 volts, 50-60 cycle (T201)
14846	Transformer—Power transformer, 105-125 volts, 25-60 cycle (T201)
30130	Transformer—Power transformer, 100-130/140-160/195-250 volts, 50-60 cycle (T201)
	EJECT ARM ASSEMBLIES
14753	Arm—Eject arm, complete
11533	Ball—1/16-inch diameter steel ball
10129	Ball—3/16-inch diameter steel ball
11529	Bearing—Ejector tip bearing and nut
11538	Bracket—Eject arm bracket
11537	Collar—Eject arm shaft collar and set screw
11536	Cushion—Counter balance roller cushion—located inside of eject arm
4055	Post—Vertical adjustment post—located on eject arm bracket
3729	Roller—Eject arm counter balance roller—located inside of eject arm
4580	Screw—No. 6—32-3/16-inch square head set screw for eject arm collar
11534	Screw—No. 8—36-7/32-inch special screw for eject arm tip center adjustment
11535	Shaft and Collar—Eject arm vertical action shaft and collar assembly
11528	Silencer—Ejector tip silencer
4067	Spring—Ejector arm bracket spring
11531	Spring—Ejector tip spring
11530	Tip—Ejector tip with tip center, adjusting screw and cap
11539	Yoke—Eject arm yoke assembly
	PICKUP AND ARM ASSEMBLIES
10941	Ball—Steel ball for pivot shaft bearing
3204	Cable—Pickup lift cable
30101	Cable—Shielded pickup cable—connects pickup unit to shorting switch
12850	Damper—Pickup arm pivot shaft damper—comprising one upper rubber damper and bearing, one lower rubber damper and one lower bearing
14820	Mechanism—Pickup mechanism, complete with needle screw
14818	Pickup and arm, complete
12546	Plug—Pivot shaft bearing plug
14823	Rod—Pickup arm brake trip rod
14822	Screw—Needle screw
14824	Screw—Pickup mechanism terminal
14913	Spring—Pickup arm tension spring
14821	Support—Pickup mechanism support
	OPERATING MECHANISM
14754	Cam—Cam and gear assembly
6808	Clutch—Trip lever friction clutch
14756	Cover—Metal cover for trip lever and friction finger assembly
6809	Finger—Manual index lever finger assembly
3670	Finger—Friction finger assembly
11554	Lever—Manual index lever—less pin
14755	Lever—Main lever and link assembly
14914	Lever—Pickup lift cable lever
11555	Lever—Trip lever and friction clutch assembly
6503	Pawl—Trip pawl assembly
3672	Pin—Manual index lever pin
13635	Plate—Eject arm actuating plate assembly
4564	Screw—Manual index lever finger set screw
4059	Screw—Trip lever clutch tension adjustment screw
4566	Screw—Special screw used to fasten main lever and link assembly bushing
13637	Spacer—Pickup arm mounting spacer
13638	Spring—Actuating spring
4565	Spring—Manual index lever finger tension spring
4061	Spring—Main spring lever tension spring or pickup lift cable spring
2893	Spring—Trip lever latch plate tension
3676	Spring—Cam and gear pawl tension spring
14916	Spring—Pickup lift lever spring
4125	Spring—Eject arm horizontal action tension spring
13636	Stud—Pickup arm lift cable stud and nut
2917	Washer—Spring washer—"U" type
	AUTOMATIC SWITCH ASSEMBLIES
3994	Cover—Motor switch cover
10184	Plate—Automatic brake latch plate
10174	Springs—Automatic brake springs
6805	Switch Assembly—Automatic switch, complete
3322	Switch—Motor switch (S103)

STOCK No.	DESCRIPTION
	MOTOR ASSEMBLIES
9735	Motor—105-125 volts—25 cycles (M101)
9651	Motor—105-125 volts—50 cycles (M101)
9650	Motor—105-125 volts—60 cycles (M101)
12050	Suspension Spring—Motor mounting spring, washer and stud assembly—comprising six springs, six cup washers, three spring washers and three studs
	MOTOR BOARD ASSEMBLIES
11881	Base—Phonograph compartment lamp socket and base
14819	Cable—Shielded pickup cable—connects shorting switch to compensator pack
12051	Capacitor—2 Mfd., complete with 2-contact male connector for use with motor, Stock Nos. 9650 or 9651 only (C104)
13101	Capacitor—4 Mfd., complete with 2-contact male connector for use with motor Stock No. 9735 only (C104)
4674	Connector—2-contact male connector for Stock Nos. 12051, 13101 or phono compartment lamp leads
4577	Connector—2-contact male connector for motor cable
11488	Connector—2-contact female connector for motor leads
14760	Cup—Used-needle cup
14762	Damper—Turntable damper
11553	Escutcheon—Index escutcheon engraved "Manual—12—10"
14688	Knob—Needle rest knob
4340	Lamp—Phonograph compartment lamp—6.3 volts
3764	Nut—Cap nut for motor board suspension
14761	Rest—Pickup rest
14825	Roller — Pickup arm cable guide roller — comprising bracket, roller and guide pin
11711	Shade—Phonograph compartment lamp shade
14758	Spacer—Pickup arm mounting spacer
14270	Spring—Retaining spring for knob, Stock No. 14758
4565	Spring—Tension spring for needle rest
3763	Suspension Spring—Suspension spring, washer and bolt assembly for motor board—comprising one bolt, two cup washers, two springs, two "C" washers, and one cap nut
30157	Switch—Pickup shorting switch (S105)
4671	Switch—Operating switch—toggle switch (S104)
14759	Turntable, complete
	REPRODUCER ASSEMBLIES Speaker RL76-4
14606	Cap—Dust cap for cone center
14785	Coil—Field coil (L202)
14602	Cone—Reproducer cone and dust cap (L203)
14847	Diffuser—Reproducer diffuser
14786	Plug—5-contact male plug for reproducer
14784	Reproducer, complete
14358	Screw—Screw, washer and lockwasher to hold core in yoke
12568	Transformer—Output transformer (T203)
14357	Washer—Spring washer to hold field coil
	MISCELLANEOUS ASSEMBLIES
12038	Band—Rubber band for tuning tube
14744	Bracket—Tuning tube mounting bracket and clamp
14745	Button—Station selector push-button
14789	Cable—Shielded phonograph volume control cable, complete with male plug—compensation unit to amplifier
14790	Cable—Shielded expander control cable, complete with two male plugs—compensation unit to amplifier
12723	Capacitor—56 Mmfd. (C105)
12951	Capacitor—2,200 Mmfd. (C107)
14393	Capacitor—.01 Mfd. (C101)
11315	Capacitor—.015 Mfd. (C102, C103)
14747	Card—Call letter cards for station selector
14840	Escutcheon—Station selector and tuning tube escutcheon, complete with crystal, indicating cards and buttons—less station indicating cards
30570	Escutcheon—Right- and left-hand side panels for electric tuning buttons—less buttons, call letter cards, retainers, and metal front plates—for use with station selector dial escutcheon
30569	Escutcheon—Station selector dial and tuning tube escutcheon and crystal, complete with "Radio-Phono" and "Electric-Manual" indicating screens—less right- and left-hand side panels for electric tuning buttons
14787	Expander Control and Switch (R103, S101, S102)
14749	Indicator—"Electric-Manual" indicator screen
14841	Indicator—"Radio-Phono" indicator screen
14751	Key—Key for use in setting "Electric Tuning" mechanism
14269	Knob—Phono—Music-Speech, Volume — Power, Tuning (small), Manual-Electric-Remote, Fidelity, Phonograph Volume, and Dynamic Amplifier Control Knobs
14688	Knob—Range selector knob
14359	Knob—Tuning knob (large)
14788	Pickup Control (R101)
11607	Receptacle—Needle card holder
12738	Resistor—27,000 ohms, insulated, ½ watt (R107)
12454	Resistor—33,000 ohms, insulated, ½ watt (R106)
14023	Resistor—82,000 ohms, insulated, ½ watt (R102)
12264	Resistor—220,000 ohms, insulated, ½ watt (R105)
12201	Resistor—1.5 megohms, insulated, ½ watt (R104)
11829	Roller—Record pocket slide roller—comprising one rubber roller, one metal roller and two washers
11377	Screw—Amplifier mounting screw and washer
5210	Screw—Chassis mounting screw and washer
14746	Shield—Celluloid shield for station call letter cards
14274	Socket—Pickup cable socket and plate on compensation unit
14270	Spring—Retaining spring for knobs, Stock Nos. 14688 and 14269
4982	Spring—Retaining spring for knob, Stock No. 14359
3763	Suspension Spring—Motor board suspension bolt, springs, cup washers and cap nut
14833	Volume Control—Phonograph volume control (R108)

©John F. Rider, Publisher

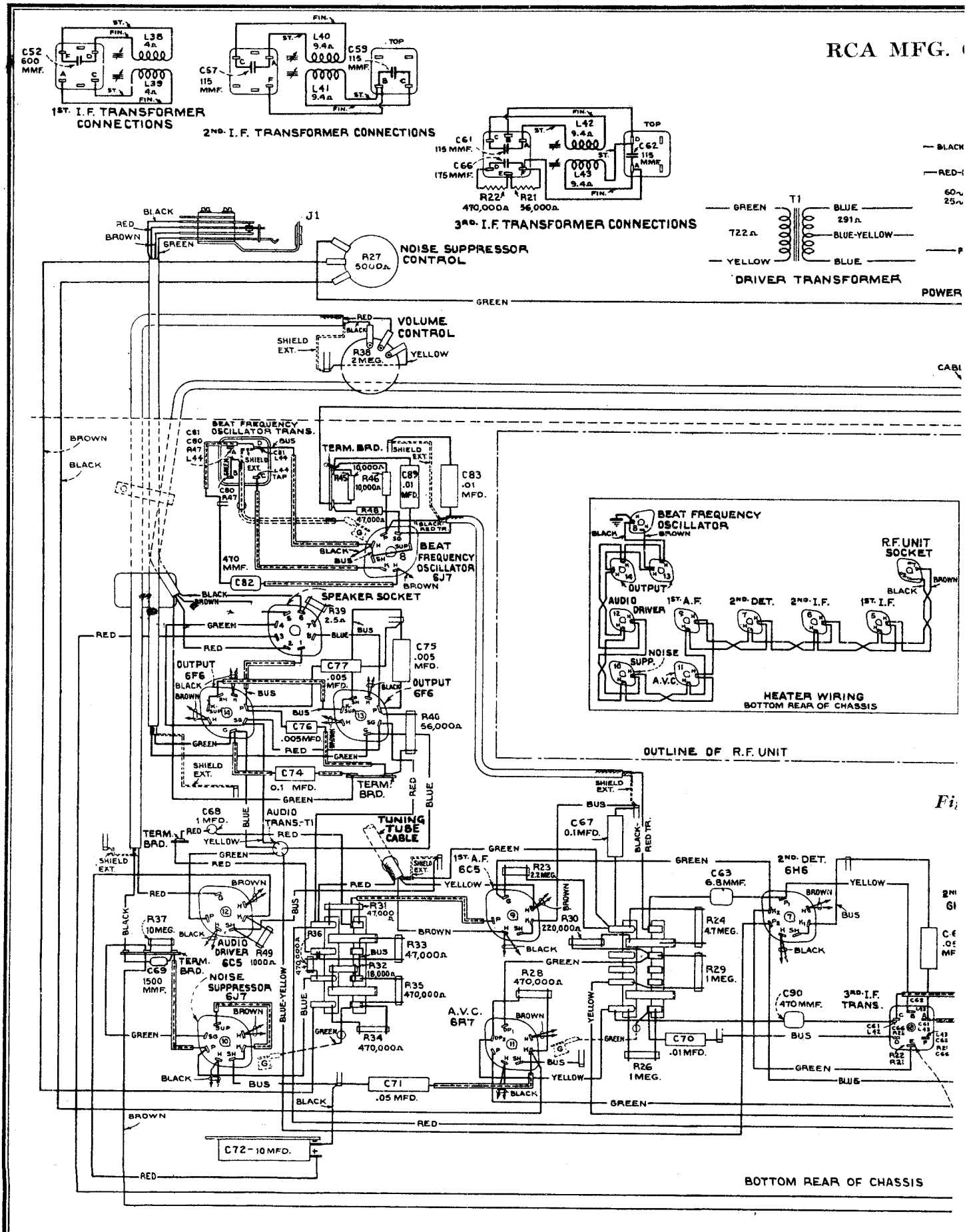

©John F. Rider, Publisher

O., INC.

MODEL ACR 111
Chassis Wiring
Coils

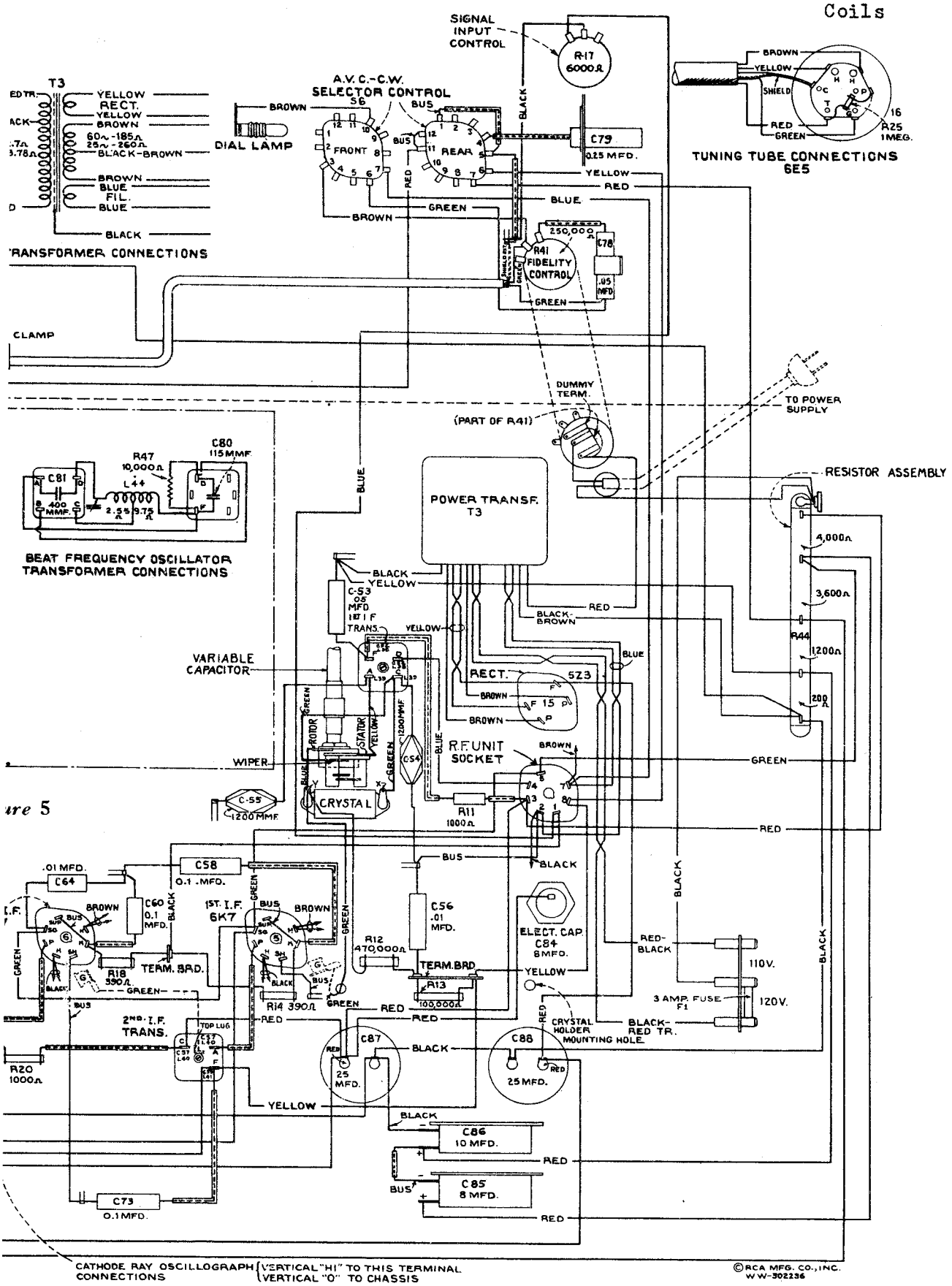

ure 5

©RCA MFG. CO., INC.
WW-302236

RCA MFG. CO., INC.

MODEL ACR 111
Schematic

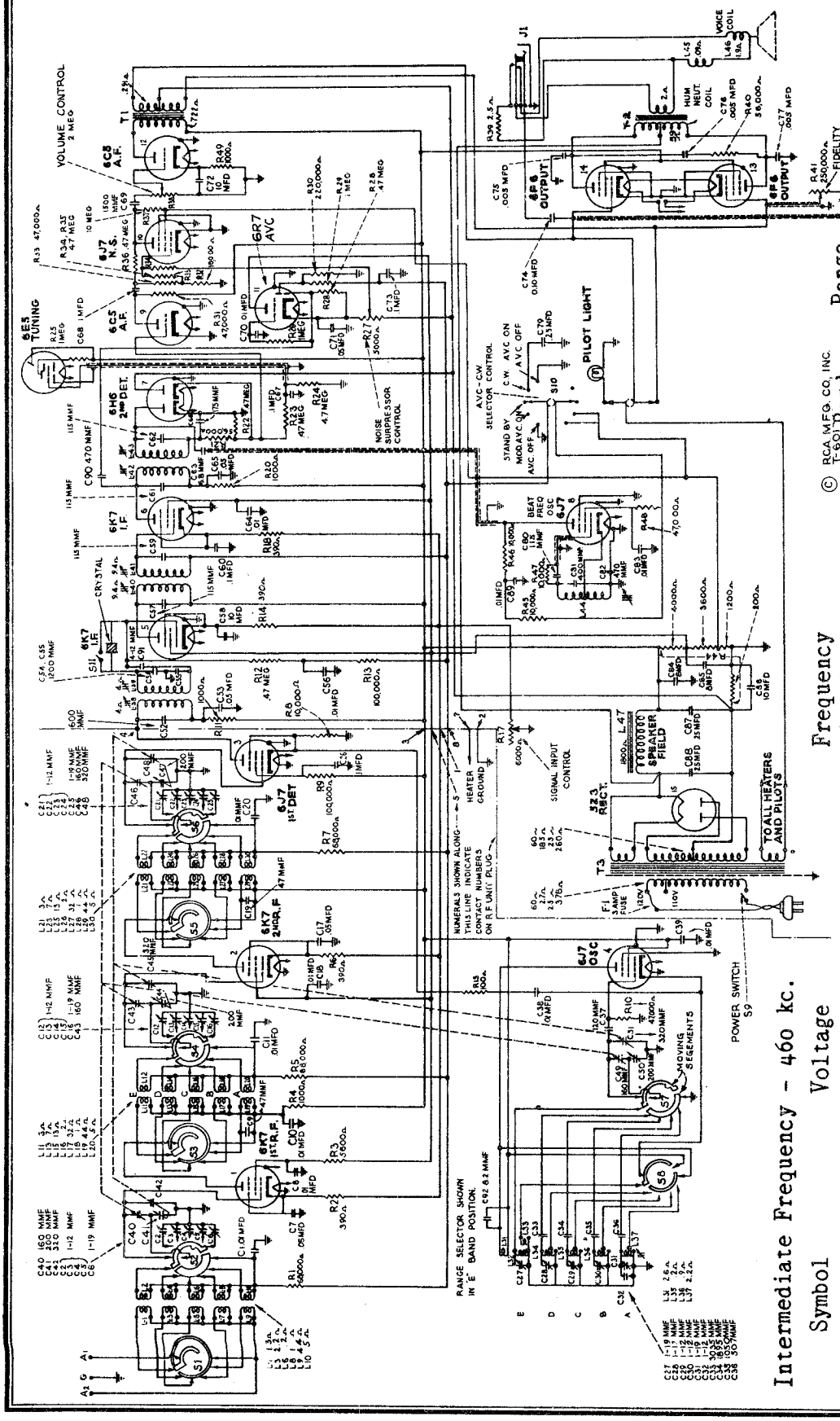

© RCA MFG. CO., INC.
T-601

Band	Range Megacycles			Voice Coil Impedance
A	0.54 to 1.6	C	3 to 8	
B	1.6 to 4.0	D	6 to 16	2½ ohms at 400 cycles
		E	12 to 30	

Intermediate Frequency - 460 kc.

Symbol	Voltage	Frequency (cycles)
A	105-125	50-60
B	105-125	25-60
C	100-130; 140-160; 195-250	40-60

As shipped from the factory, rating C receivers are connected for 225-250 volts unless prominently specified otherwise on the chassis. Such receivers may be converted for operation at 100-117, 117-130, 140-160 or 195-225 volts when required.

©John F. Rider, Publisher

MODEL ACR 111
Tuner Unit
Chassis Wiring
Coils

RCA MFG. CO., INC.

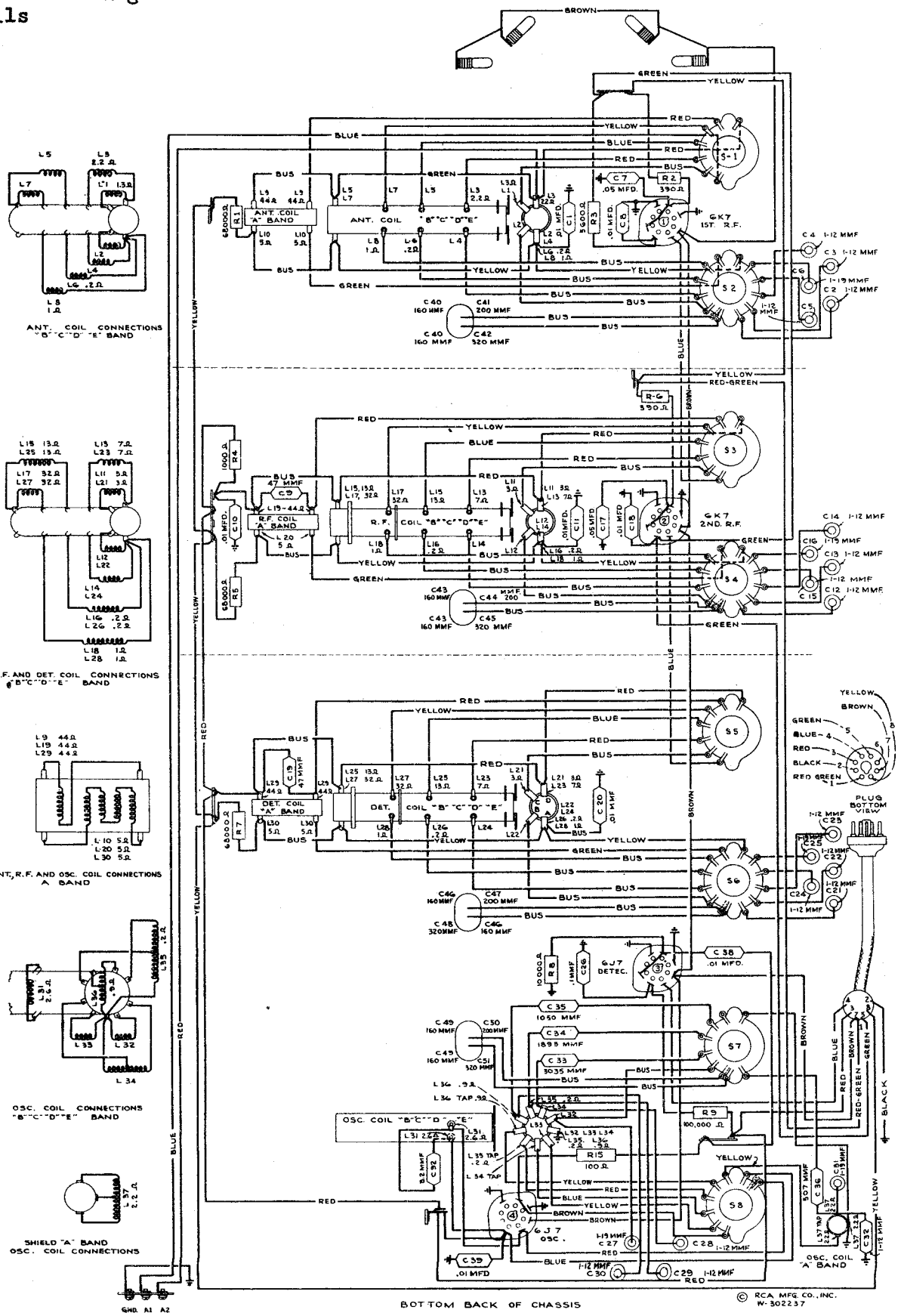

Figure 6—Tuner Unit Wiring Diagram

©John F. Rider, Publisher

©John F. Rider, Publisher

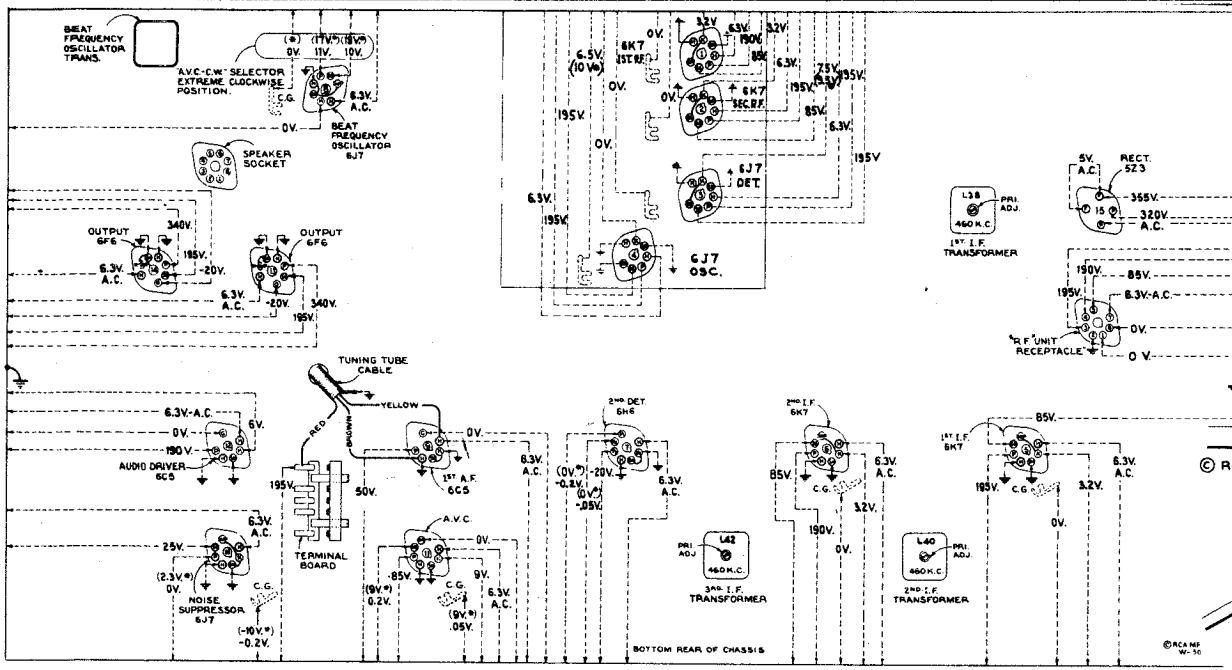

Figure 10—Radiotron Socket, Voltages, Coil and I-F Trimmer Locations

Measured at 115 volts, 60 cycle supply--Tuned to approximately 1000 kc--No signal being received--"Signal Input" control clockwise--"Noise Suppressor" control counterclockwise--"AVC Selector" to "Mod. AVC OFF"--"Volume" control counterclockwise--"Fidelity" and "Beat Frequency" controls optional.

Note: Two voltage values are shown for some readings. The value shown in parentheses with asterisk(*) indicates operating conditions without voltmeter loading. The other value (generally lower) is the actual measured voltage and differs from the value shown in parentheses because of the additional loading of the voltmeter through the high series circuit resistance.

The correct length (L) in feet for each arm of the doublet for maximum signal input at any particular frequency in kilocycles may be computed from the following formula:

$$L = \frac{233{,}700}{f}$$

where L = length of each doublet arm in feet and f = frequency in kilocycles.

DOUBLE DOUBLET ANTENNA

L_1 =	130	feet	for	160	Meter	Band
L_1 =	65	"	"	80	"	"
L_1 =	33	"	"	40	"	"
L_1 =	16	"	"	20	"	"
L_2 =	65	"	"	80	"	"
L_2 =	33	"	"	40	"	"
L_2 =	16	"	"	20	"	"
L_2 =	8	"	"	10	"	"

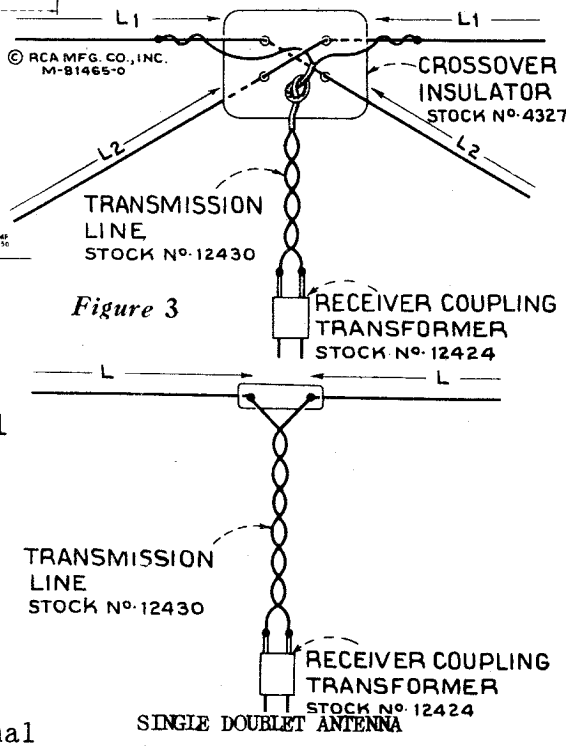

Figure 3

SINGLE DOUBLET ANTENNA

L =	130	feet	for	160	Meter	(1,900 kc)	Band
L =	65	"	"	80	"	(3,800 kc)	"
L =	33	"	"	40	"	(7,150 kc)	"
L =	16	"	"	20	"	(14,200 kc)	"
L =	8	"	"	10	"	(28,000 kc)	"

MODEL ACR 111
R-F and I-F
Trimmers, Sockets

RCA MFG. CO., INC.

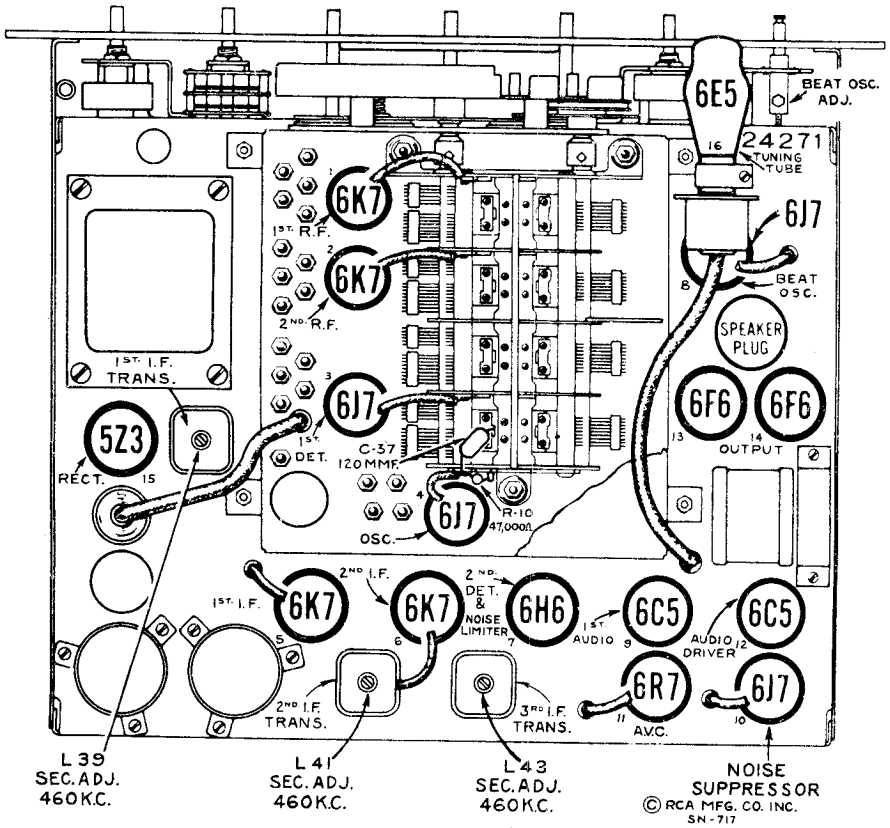

Figure 8—Radiotron and I-F Trimmer Locations

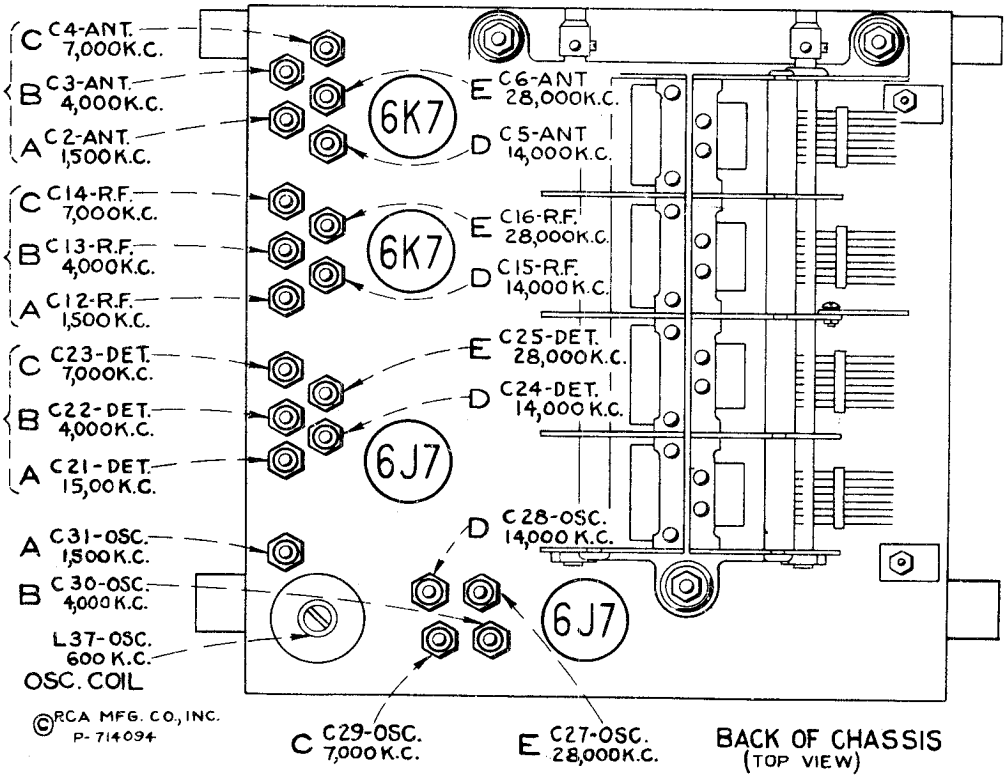

Figure 9—R-F Trimmer Locations

Before aligning the r-f circuits, make receiver dial adjustments as outlined under "Selector Dial" (Figure 11).

In performing services on the oscillator, detector, and r-f circuits, the leads should be restored to their original positions, since the lead-dress is important for proper operation and dial calibration.

©John F. Rider, Publisher

MODEL ACR 111
Alignment Table

RCA MFG. CO.. INC.

Order of Alignment	Crystal Filter Control	Test Oscillator: Connection to Receiver	Test Oscillator: Dummy Antenna	Test Oscillator: Frequency Setting	Receiver Dial Setting	Circuit to Adjust	Adjustment Symbols	Adjust to Obtain	Dial Setting For Image Check
1	"OFF"	6L7 Det. Grid Cap	.001 mfd.	460 kc	No signal 550–750 kc	3rd i-f Trans.	L43 & L42	Max. (peak)	—
2	"OFF"	6L7 Det. Grid Cap	.001 mfd.	460 kc	No signal 550–750 kc	2nd i-f Trans.	L41 & L40	Max.(peak)	—
3	"OFF"	6L7 Det. Grid Cap	.001 mfd.	460 kc	No signal 550–750 kc	1st i-f Trans.	L39 & L38	Max.(peak)	—
4	"ON" Mid-Position "MAX."	6L7 Det. Grid Cap	.001 mfd.	Shift Slightly for Max. Output	No signal 550–750 kc	—	—	Max.(peak)	—
5	"	6L7 Det. Grid Cap	.001 mfd.	Final Setting of Above	No signal 550–750 kc	3rd i-f Trans.	L43 & L42	Max.(peak)	—
6	"	6L7 Det. Grid Cap	.001 mfd.	"	No signal 550–750 kc	2nd i-f Trans.	L41 & L40	Max.(peak)	—
7	"	6L7 Det. Grid Cap	.001 mfd.	"	No signal 550–750 kc	1st i-f Trans.	L39 & L38	Max.(peak)	—
8	"OFF"	6L7 Det. Grid Cap	.001 mfd.	"	No signal 550–750 kc	—	—	Check for Max.Output	—
9	"OFF"	6K7 2nd r-f Grid Cap	300 ohm	28,000 kc	28,000 kc	"E" Osc.	C27	Max.(peak)+	
10	"OFF"	6K7 2nd r-f Grid Cap	300 ohm	28,000 kc	Rock Thru 28,000 kc	"E" Det.	C25	Max.(peak)*	
11	"OFF"	"A1" Ant. Post	300 ohm	28,000 kc	Rock Thru 28,000 kc	"E" R-F	C16	Max.(peak)*	
12	"OFF"	"A1" Ant. Post	300 ohm	28,000 kc	Rock Thru 28,000 kc	"E" Ant.	C6	Max.(peak)*	28,920 kc
13	"OFF"	6K7 2nd r-f Grid Cap	300 ohm	14,000 kc	14,000 kc	"D" Osc.	C28	Max.(peak)*	
14	"OFF"	6K7 2nd r-f Grid Cap	300 ohm	14,000 kc	Rock Thru 14,000 kc	"D" Det.	C24	Max.(peak)+	
15	"OFF"	"A1" Ant. Post	300 ohm	14,000 kc	Rock Thru 14,000 kc	"D" R-F	C15	Max.(peak)+	
16	"OFF"	"A1" Ant. Post	300 ohm	14,000 kc	Rock Thru 14,000 kc	"D" Ant.	C5	Max.(peak)+	13,080 kc
17	"OFF"	6K7 2nd r-f Grid Cap	300 ohm	7,000 kc	7,000 kc	"C" Osc.	C29	Max.(peak)*	
18	"OFF"	6K7 2nd r-f Grid Cap	300 ohm	7,000 kc	Rock Thru 7,000 kc	"C" Det.	C23	Max.(peak)+	
19	"OFF"	"A1" Ant. Post	300 ohm	7,000 kc	Rock Thru 7,000 kc	"C" R-F	C14	Max.(peak)+	
20	"OFF"	"A1" Ant. Post	300 ohm	7,000 kc	Rock Thru 7,000 kc	"C" Ant.	C4	Max.(peak)+	
21	"OFF"	6K7 2nd r-f Grid Cap	300 ohm	4,000 kc	4,000 kc	"B" Osc.	C30	Max.(peak)*	
22	"OFF"	6K7 2nd r-f Grid Cap	300 ohm	4,000 kc	Rock Thru 4,000 kc	"B" Det.	C22	Max.(peak)+	
23	"OFF"	"A1" Ant. Post	300 ohm	4,000 kc	Rock Thru 4,000 kc	"B" R-F	C13	Max.(peak)+	
24	"OFF"	"A1" Ant. Post	300 ohm	4,000 kc	Rock Thru 4,000 kc	"B" Ant.	C3	Max.(peak)+	
25	"OFF"	6K7 2nd r-f Grid Cap	300 ohm	600 kc	600 kc	"A" L-F Osc.	L37	Max.(peak)	
26	"OFF"	6K7 2nd r-f Grid Cap	300 ohm	1,500 kc	1,500 kc	"A" H-F Osc.	C31	Max.(peak)	
27	"OFF"	6K7 2nd r-f Grid Cap	300 ohm	1,500 kc	1,500 kc	"A" Det.	C21	Max.(peak)	
28	"OFF"	6K7 2nd r-f Grid Cap	300 ohm	600 kc	Rock Thru 600 kc	"A" L-F Osc.	L37	Max.(peak)	
29	"OFF"	6K7 2nd r-f Grid Cap	300 ohm	1,500 kc	1,500 kc	"A" H-F Osc.	C31	Max.(peak)	
30	"OFF"	6K7 2nd r-f Grid Cap	300 ohm	1,500 kc	1,500 kc	"A" Det.	C21	Max.(peak)	
31	"OFF"	"A1" Ant. Post	300 ohm	1,500 kc	1,500 kc	"A" R-F	C12	Max.(peak)	
32	"OFF"	"A1" Ant. Post	300 ohm	1,500 kc	1,500 kc	"A" Ant.	C2	Max.(peak)	

+ Use Maximum Capacity Peak If Two Peaks Can Be Found.

* Use Minimum Capacity Peak If Two Peaks Can Be Found.

©John F. Rider, Publisher

MODEL ACR 111
MODEL ACR 175
Selectivity Control Curves

RCA MFG. CO., INC.

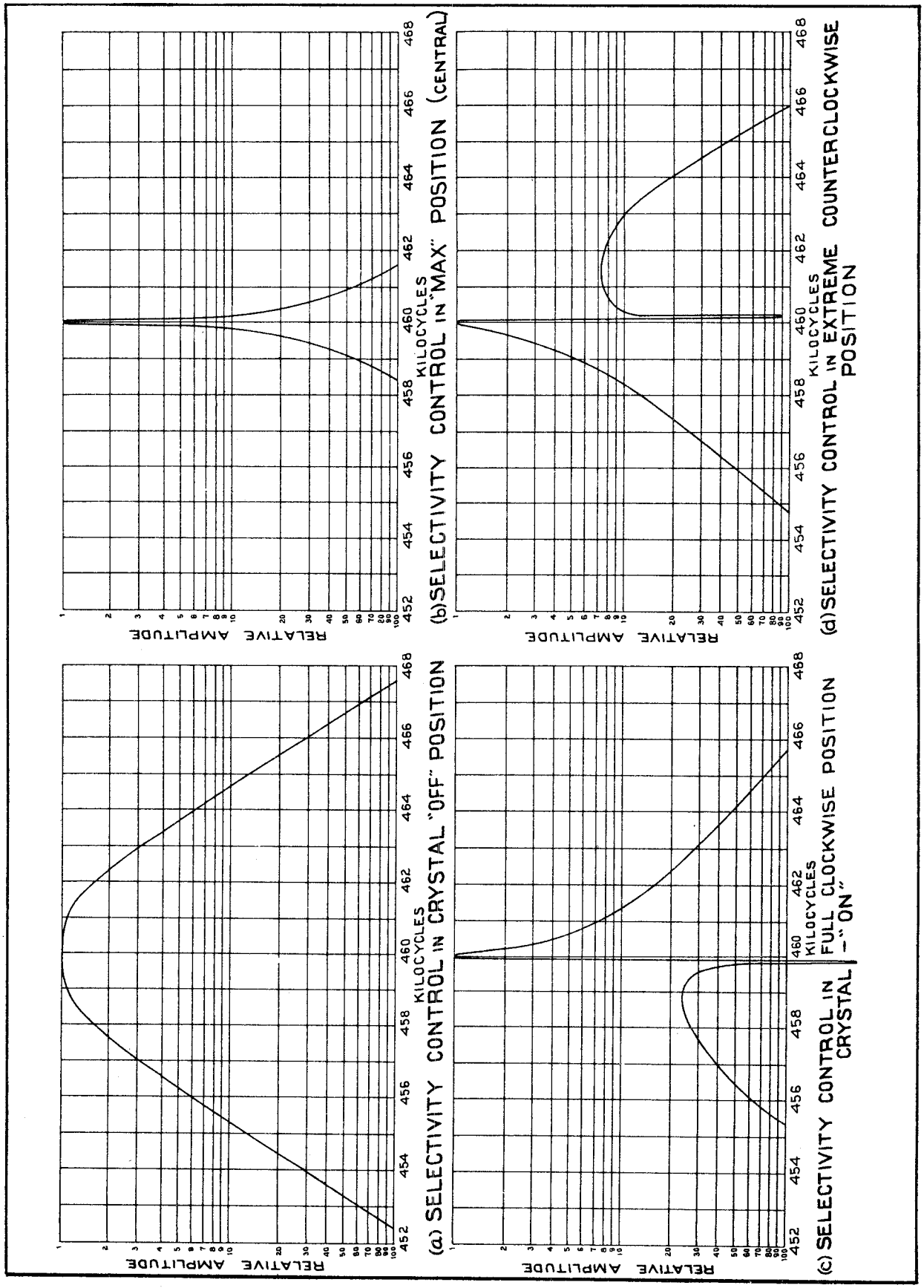

Figure 13—Selectivity Control Curves—Crystal Filter

©John F. Rider, Publisher

©John F. Rider, Publisher

Figure 11 illustrates the relation of the various parts of the dial mechanism when in its "B" position with the range switch likewise turned to the same range position. In re-assembling the dial after repairs, see that the gears are meshed in accordance with the diagram, at the same time noting that the range switch is in its "B" position and the lever attached to the range-switch shaft placed in the position shown.

To adjust the dial mechanism, set the range-switch to its "B" position. Place a straight-edge across the center of the dial so that its edge is even with the lower (end) marking at both the low-frequency and high-frequency ends of the dial. Under such conditions the straight-edge should be paralleled with the top of the chassis base. If the straight-edge is not parallel with the top of the chassis base, loosen the nut on the rear of the roller link pivot stud and move the stud up or down until the link roller moves the dial to the desired position so that the end calibration marks obtain the position mentioned above. Tighten the nut on the roller link pivot stud.

Set the gang-tuning condenser to its maximum capacity position. Adjust the dial pointer to the low-frequency (end) mark on the "B" range scale. This is a friction adjustment.

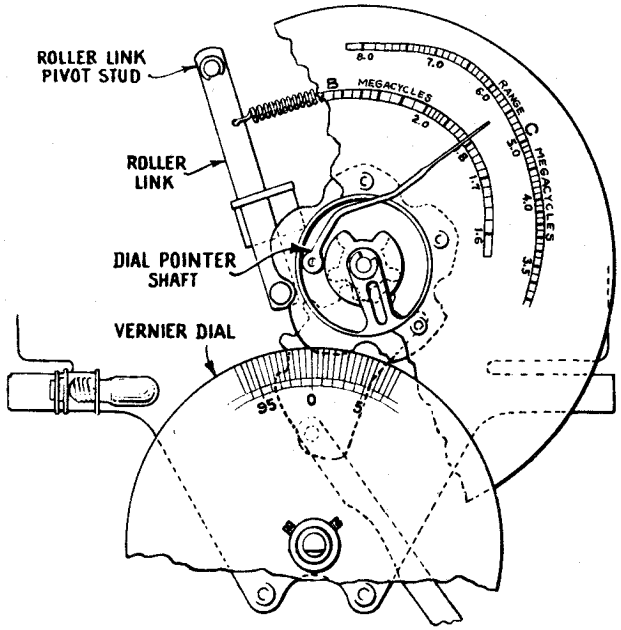

Figure 11—Selector Dial Mechanism

Centering of the loudspeaker voice coil is made with three narrow paper feelers after first removing the front paper dust cover. This may be removed by softening its cement with a very light application of acetone using care not to allow the acetone to flow down into the air gap. The dust cover should be cemented back in place with ambroid upon completion of adjustment.

Average performance data for the ACR-111 is shown in the following table. Slight variations either above or below the values given, may be encountered due to practical manufacturing tolerances.

Noise Equivalent - (microvolts CW) - "Noise Equivalent" is a coined term to express the input in microvolts through the normal input circuit, which would be required to produce an output equal to the receiver noise output.

Selectivity - The Selectivity curve for the average ACR-111 receiver is shown in Figure 13(a).

Range	Frequency Megacycles	Noise Equivalent Microvolts (CW)	Image Ratio	Sensitivity Input Microvolts(1 w.output)
A	0.6	2	250,000	10
	1.5	2	100,000	10
B	1.7	1.0	150,000	5
	4.0	0.85	40,000	3.5
C	4	1.2	3,000	5
	7	0.96	2,000	3.5
D	7	1.1	3,000	4.5
	14	0.86	400	3.5
E	14	0.9	200	15
	28	1.0	10	8

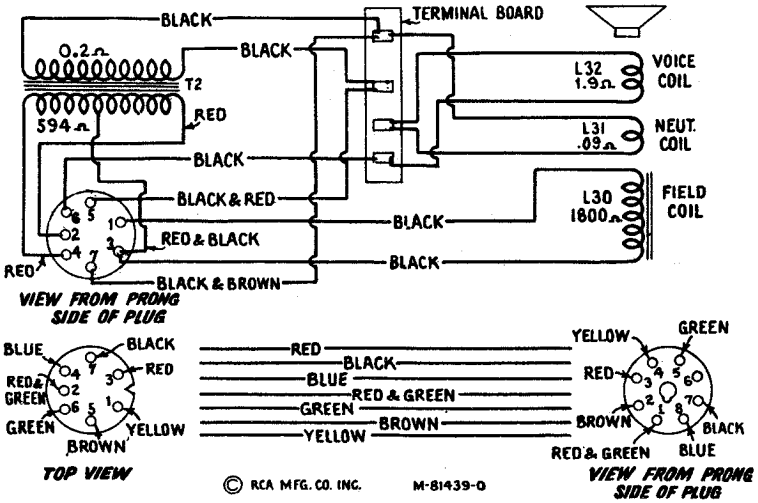

Figure 12—Loudspeaker Wiring

MODEL ACR 111
Notes, Operation

RCA MFG. CO., INC.

1. General

This new, sixteen-tube, RCA Amateur Communications Receiver is built for rack and for table mounting and covers a frequency range of from 540 to 30,000 kc. It embodies the most up-to-date circuits and construction, including RCA metal tubes, electrical band spread, beat-frequency oscillator, crystal filter, noise suppressor, noise limiter, sensitivity and automatic-volume controls, standby switch, loudspeaker, and phone jack. The advanced degree of sensitivity and selectivity of the instrument together with its frequency stability and reliability open to the operator a field of reception covering all communications in the more important ranges.

This book should be studied carefully to learn how to make full use of the ACR-111 and keep it in its optimum operating condition.

2. Special Features

An inspection of the schematic circuit diagram and the wiring diagrams make clear the many developments incorporated in this model. See Fig.4, 5 and 6.

Metal tubes provide effective shielding as well as minimum terminal spacing and short connecting circuits with their attendant advantages. The eleven labeled controls, including the phone jack, are all on the front panel, thus giving complete front panel operation. The two large diameter tuning knobs with crank handles are comfortable and convenient to the hand and facilitate rapidity and ease of tuning. In conjunction with the vernier drive and electrical band spread system, fine tuning adjustments are easily made. An AVC Switch allows one to dispense with the use of the Automatic-Volume-Control when desired.

The Crystal Filter in the first i-f stage provides single-signal reception with an unusually high degree of selectivity, and the adjustable Selectivity Control is a means of obtaining various degrees of selectivity with or without a rejection dip. The Electron-Ray-Tube Indicator fulfills the dual function of measuring signal input and aiding in precise tuning.

The Noise Suppressor is a valuable aid in reducing interfering noises and thus enabling the operator to obtain reception of maximum strength and fidelity and minimum interference. It is used in conjunction with the Signal Input Control. A Noise Limiter is incorporated in the circuit by means of the second diode of the second detector (RCA 6H6) tube. This device reduces peak noises due to excessive signals or bursts of static which load the anode beyond a certain bias value.

The Selector Dial brings each scale separately into the dial opening by a turn of the Range Selector knob and gives clear vision tuning calibrations for the range in use only. In addition the vernier scale beneath provides for calibration spread, and the readings of both tuning and calibration spread scales may be entered in the station log for future reference when it is again desired to receive the same station.

The Beat Oscillator is equipped with two controls, (1) an "On-Off" switch and (2) a Heterodyne Control with magnetite-core tuning which effectively governs the pitch. The shield enclosing the entire beat-oscillator circuit enables the listener to operate the set with freedom from undesirable beat notes due to harmonics.

The Loudspeaker is a separate unit attached to the chassis by means of a cable with a seven-prong plug-in connection. It is assembled on a small wooden mounting in which holes are provided for fastening to a large baffle when high-quality reproduction is required.

4. Circuit Data and Power Rating

Circuit - Superheterodyne with beat-frequency oscillator for CW reception, noise suppressor, noise limiter, crystal filter, automatic volume control, electron-ray tuning indicator, calibrated signal input (sensitivity) control, electrical band spread, and class A pentode output system.

Power Output - 5 watts (undistorted); 8 watts maximum.

Loudspeaker - (separate unit) - Electro-dynamic 8-inch (voice-coil impedance 2-1/4 ohms at 400 cycles).

Tubes -

2 RCA-6K7 - Radio Frequency Amplifiers
1 RCA-6J7 - First Detector
1 RCA-6J7 - Oscillator
2 RCA-6K7 - Intermediate-Frequency Amplifiers
1 RCA-6H6 - Second Detector and Noise Limiter
2 RCA-6C5 - Audio-Voltage Amplifiers
2 RCA-6F6 - Power Output Tubes
1 RCA-5Z3 - Full-Wave Rectifier
1 RCA-6J7 - Beat-Frequency Oscillator
1 RCA-6R7 - Automatic Volume Control
1 RCA-6J7 - Noise Suppressor
1 RCA-6E5 - Tuning Indicator

See diagram label on shield on chassis for locations of tubes and grid leads.

Power Supply Ratings - Check with rating symbol on chassis.

Power Consumption - 120 watts.

5. Antenna

A most important factor in good reception is the antenna. Both "noise reducing" and "directional" properties as well as definite "length" to suit the signal frequency are essential antenna requirements for best reception. A three-terminal board with the terminals marked "A1", "A2", and "G" is provided on the rear of the chassis for connections to antenna and ground. The "G" terminal should always be connected to a good external ground.

For maximum performance in any one or two amateur bands, one of the antenna systems illustrated below is recommended. Essential parts, such as cross-over insulators (Stock No. 4327), transmission lines (Stock Nos. 12429 and 12430) and receiver coupling transformers (Stock No. 12424) may be purchased from your dealer.

PART III - OPERATION

6. Controls

All controls are located upon the front panel and are identified by adjacent markings.

(a) **Tuning and Band Spread** - The two large knobs to the right and left of the dial are respectively the "Main" and "Band Spread" tuning knobs. The latter covers a range of 10 percent (± 5%) of the main dial scale reading.

(b) **Volume** - The Volume Control is the knob to the left below the "Band Spread" tuning knob. It is connected in the audio-frequency circuit, and the receiver output level is increased with clockwise rotation.

(c) **Power and Fidelity** - The Power Switch is combined with the Fidelity Control, the power being off in the counter-clockwise position.

The Fidelity Control provides attenuation of the higher frequencies. Full-range reproduction is obtained with the knob turned clockwise. Turning counter-clockwise introduces a capacitance in the secondary circuit of the driver transformer, which attenuates the high-frequency response and aids in the reduction of disturbing background noises.

(d) **Range** - The Range Selector in the center of the panel below the dial selects any one of the five scales of which the frequency limits are tabulated under "Part II Electrical Specifications". Turn the Range Selector knob to bring the required scale into the dial opening.

(e) **Electron-Ray-Tuning Tube** - The green illuminated Electron-Ray-Indicator Tube (RCA-6E5) at the left of the dial near the top of the front panel is a visible guide to precise tuning. The deflection of the electron stream by the signal voltage causes a narrowing of the darker sector. Maximum deflection, (i.e., when the area of the light sector is at a maximum) indicates that the receiver is tuned to exact resonance.

(f) **Selectivity Control** - This introduces the crystal filter into the i-f circuit for single-signal reception of CW telegraph or telephone transmission. Crystal phasing is performed by means of an air-trimmer capacitor. Near the midway position marked "Max." the crystal circuit is balanced and maximum selectivity is obtained. This setting is characterized by minimum background noise. In the extreme clockwise position the crystal is short-circuited by means of the crystal switch. Other positions broaden the crystal selectivity curve on one side of resonance and cause a rejection dip on the other side. They are useful for phone reception through severe interference.

(g) **Beat Frequency** - The Beat Frequency knob at the extreme lower left is a heterodyne control governing the Beat Oscillator output frequency. When set at its zero mid-position the Beat Oscillator frequency will approximate zero beat with the receiver tuned accurately to an incoming signal. The calibration figures on either side of the zero position indicate the approximate frequency in kilocycles of the beat produced by the combination of the Beat Frequency Oscillator and the received signal tuned to exact resonance.

(h) **Signal Input** - The Signal Input Control is calibrated from 1 to 10,000 on a logarithmic scale. It is used in conjunction with the Electron-Ray-Indicator to obtain the approximate value in microvolts of any signal delivered to the receiver. This is accomplished by tuning the receiver to resonance by means of the Electron-Ray-Indicator and then rotating the Signal Input knob fully counter-clockwise to reduce the voltage on the Electron-Ray tube. Then by slowly rotating this control clockwise, a point causing only a slight deflection (1/64 inch) in the dark sector in the Electron-Ray-Indicator, will be obtained. The Signal Input scale reading will then be the approximate signal input value to the receiver, in microvolts. For code reception the correct setting will be at the point where the Electron-Ray-Indicator just begins to flicker.

The absolute accuracy of Signal Input values depends upon the sensitivity of the receiver. This in turn depends on proper alignment, condition of tubes, value of line voltage and similar factors. Relative readings, however, between stations of different signal strengths give a correct comparison. Signal Input readings are also useful for reporting to the transmission station for making tests on different types of antennas, for discovering improvements in transmitters at distant locations, and for making charts of signal strength variations.

Note: Multiply the readings by 5 for obtaining values on band "E" operation.

(i) **AVC - CW Selector** - This is a five position switch on the right of the dial and by means of this knob the operator may set the receiver for Modulated or CW reception, either with or without Automatic Volume Control, according to requirements. On normal CW reception with the control turned to "CW AVC ON" the time constants of the AVC circuits will be such that they will hold during intervals between characters. For slow-speed CW reception, however, the time constant will not hold and the switch should be turned to "CW AVC OFF" and the Signal Input Control used for adjusting the output level. Furthermore the central point is a "Standby" position which keeps the filaments of all tubes heated ready for immediate reception. This is indicated by means of the Standby Light at the top right hand side of the front panel.

©John F. Rider, Publisher

RCA MFG. CO., INC.

(j) Noise Suppressor - The Noise Suppression Control is for reducing peaks of noise to a minimum. When used in conjunction with the Signal Input or Sensitivity Control and the Fidelity Control, the Noise Suppressor becomes a very important and valuable device for reducing interfering noises that may impair the intelligibility of radio reception. It is of particular value in minimizing interference caused by the ignition systems of airplanes and automobiles, dial telephones, and similar electrical apparatus. Interference from rotating electrical machinery however is not eliminated by this device.

With a station properly tuned in by the use of the Electron-Ray-Tuning-Indicator, then if the Noise Suppression knob is slowly rotated in a clockwise direction a point of noticeable distortion of the signal will eventually be reached. (If the signal is too strong it may be necessary to reduce the strength by means of the Signal Input Control in order to obtain a point of noticeable distortion on the Noise Suppression Control.) The knob should then be turned very slowly counter-clockwise until the signal becomes clear. This point is the correct setting for the Noise Suppression Control for that particular signal.

This control is also effective for inter-carrier Noise Suppression and its use in this capacity requires the following procedure in order to obtain reception with full strength, maximum fidelity and minimum interference:

(1) Reduce Signal Input Control as low as possible, meanwhile keeping receiver output at the desired level by means of the Volume Control.

(2) Set receiver at a point where no signal is being received.

(3) Adjust Noise Suppression Control till background noise is just audible.

(4) Tune in desired signal again.

This adjustment of the receiver is of particular value for intermittent signals or when it is desired to standby on a certain channel, the background output of the receiver being extremely low on "no signal" and yet allowing full volume on "signal".

(k) Phones - The Phone Jack is to the left of the front panel. When a phone plug is inserted in this jack, it simultaneously connects a resistance load across the secondary of the output transformer in place of the voice coil of the electro-dynamic loudspeaker. It also connects the phones across the plate circuit of the output tube, a blocking condenser being used to isolate the d-c voltage. The loudspeaker field which is employed as a filter for the rectifier stage, still forms an active part of the circuit when using headphones. By inserting the phone plug part way in the jack both headphone and loudspeaker signals may be obtained. The loudspeaker is connected to the chassis by means of a cable and plug.

7. Dial

The Selector Dial provides for each major band a single clearly calibrated scale in the upper dial opening. Each scale is clearly marked in megacycles. The small lower dial opening gives calibration spread for accurate logging. The mechanism is illustrated in Figure 11.

8. Tuning

The two r-f amplifiers (6K7), first detector (6J7) and oscillator (6J7) are tuned by two four-gang variable capacitors and controlled from two knobs.

The right hand knob controls the main tuning capacitor and the left hand knob the band spread capacitor. The band spread capacitor is connected in the circuit to cover a uniform percentage of band spread regardless of the frequency to which the receiver is tuned. Frequency readings on the dial scale obtained by rotation of the Main Tuning knob are only accurate when the Band Spread Control is at zero - turned fully to right.

The Tuning limits for each of the five ranges are given under "Part II - Electrical Specifications". To tune the receiver for desired reception of modulated signals proceed as follows:

(a) Turn Power Switch "On".

(b) Turn Range Selector to bring the desired scale into the Selector Dial opening.

(c) Set AVC - CW Control to "MOD. AVC ON".

(d) Advance Signal Input Control fully clockwise for maximum sensitivity.

(e) Advance Volume Control clockwise until background noise is heard.

(f) Set Band Spread Control at zero - fully clockwise - and then rotate Main Tuning Control to a point just below desired frequency, such as at the low end of an Amateur Band. Now tune in signal with Band Spread Control. Turn slowly counter-clockwise, observe the Calibration Spread scale to obtain station location and then watch the Electron-Ray-Tuning-Indicator for point of resonance.

(g) Decrease volume as necessary and set Fidelity Control for preferred quality of reproduction. Full tone range reproduction is obtained with the knob set to its extreme clockwise position.

(h) Silent Tuning may be obtained by reducing the volume until no signal is heard, and then tuning by means of the visual indications of the Electron-Ray Tube.

(i) Weak Modulated Signals - The Beat Oscillator may be used to advantage in locating weak, modulated signals: For this purpose it should be tuned exactly to the intermediate frequency of the receiver by turning the Beat Frequency Control to "0" so that an audio-frequency note of ascending pitch will be obtained on each side of resonance of the incoming signal when the AVC - CW Selector is turned to "CW AVC OFF". Any carrier will then be tuned to exact resonance when the Frequency Control is adjusted for "zero beat" and weak signals will be located almost as well as those of greater strength because of the heterodyne "whistle" produced while passing through resonance. After proper adjustment has been made, turn AVC - CW Selector to "MOD. AVC ON".

(j) CW Signals - For CW (code) reception, the tuning procedure is the same as for modulated signals except that the Beat Oscillator performs a definite rather than incidental function. The Beat Frequency Control is set not at zero, but slightly to either side so as to provide an audio-frequency beat note when the receiver is tuned to resonance with any carrier. Adjust the pitch with the Beat Frequency Control knob. Turn AVC - CW Selector to "CW AVC OFF" when receiving slow speed CW transmission.

(k) If the interference is objectionable during reception, the Noise Suppression Control should be adjusted, as described under "Controls" Section 6, to its "correct setting" for that signal.

(l) Selectivity - The value of the Crystal Selectivity Control is most evident on CW reception. Its importance should not be forgotten in phone reception and for identification of weak stations which are normally lost in the background noise. The curves (Figure 13) should be studied carefully before operating the Selectivity Control.

The following suggestions also may be of value:

Locate the desired frequency or station with control at "Crystal OFF," i.e., in its position of minimum selectivity, then adjust to obtain the desired degree of selectivity.

Tuning is extremely critical with control in the "Max." position and in consequence the movement of the Band Spread knob should be very slow and deliberate.

Heterodyne Control Setting

Connect a source of unmodulated carrier of the i-f frequency from the grid of the RCA-6J7 first-detector to ground. Turn AVC off, crystal filter to maximum selectivity, sensitivity control to maximum, audio volume control partially on and beat oscillator on.

Rotate the Heterodyne Control knob to left or right until the heterodyne beat is heard.

Change the frequency of the unmodulated carrier from the test oscillator *very carefully* for maximum deflection on the electron-ray-tube indicator. Reduce the signal input if necessary so that the electron-ray-tube does not completely close. The test oscillator is now adjusted to the same frequency as the crystal filter.

Set the Heterodyne Control knob at its zero position and note whether the heterodyne beat is at zero frequency. If not, proceed as follows:

(a) Rotate the Heterodyne Control knob to obtain zero beat.

(b) Loosen the knob set screw and turn loosened knob on shaft to its "0" or vertical position.

(c) Tighten up set screw.

The Heterodyne Control is now adjusted to zero beat at the frequency of the crystal filter.

In the event that the frequency drift is such that the zero beat position of the knob is at or beyond the figure "2" on either side, or outside field of rotation, the following adjustment is necessary:

(a) Turn knob until the set-screw-stop on the knob control shaft, behind the front panel, is approximately vertical, then loosen stop with screw driver.

(b) Turn core stud to obtain zero beat. Use a pair of padded long-nose pliers to rotate the core stud in order to avoid injuring thread.

(c) Turn set-screw-stop over to left (facing front panel) to its mid-position, and adjust knob control shaft to allow 1/32 to 1/16 inch clearance between front panel and adjacent surface of knob.

(d) Tighten set-screw-stop with pliers to grip core stud, then swing stop to vertical and tighten securely with screw driver.

(e) Proceed as first described for setting knob accurately to zero position at zero beat.

Note: Do not pull control shaft loose from bearing bracket when adjusting core stud.

Beat Frequency Oscillator - The frequency generated by the Beat Frequency beat-oscillator (457 to 463 kc) for CW reception is applied to the No. 1 diode plate of the RCA-6H6 second-detector through capacitor C63. This frequency mixes with the incoming intermediate frequency to produce an audio-frequency note which can be readily heard in the loudspeaker or phones. The movable magnetite-core, adjusted by the Beat Frequency Control, provides a variable inductance which acts as a vernier control for adjustment of the oscillator frequency over the required a-f range on either side of the intermediate-frequency signal. The plate and screen-grid voltage supply to this oscillator is turned on and off by means of the AVC - CW selector switch.

AVC - CW Selector - A five-position switch selects the type of reception and controls the Beat Oscillator and AVC circuits. The secondary of the audio transformer T1 is short-circuited in the "Standby" position.

©John F. Rider, Publisher

MODEL ACR 111
Circuit Data
Transformer

RCA MFG. CO., INC.

Circuit Arrangement

A schematic diagram of the complete circuit is shown in Figure 4, a wiring diagram illustrating the wiring layout of the radio chassis and front panel controls is detailed in Figure 5, and of the r-f tuner unit in Figure 6. The loudspeaker wiring diagram and connections to chassis are shown in Figure 12, and the wiring of the Universal Transformer for rating "C" receivers in Figure 7. The circuit is based on the superheterodyne principle. It consists of two r-f amplifier stages, a first-detector (converter) stage, a separate oscillator stage, a crystal filter stage, two i-f amplifier stages, a diode-detector and noise limiter stage, an automatic-volume control stage, an audio voltage-amplifier stage, a noise suppressor stage, an audio driver stage, a power-amplifier stage, a beat frequency oscillator stage, and a full-wave rectifier.

A doublet antenna, when connected to the proper input terminals of the receiver, is coupled to the control grid of the first RCA-6K7 r-f amplifier tube through the tuned r-f transformer consisting of L_2, L_4, L6, L8, L_{10}, C_{40}, C_{41}, and C_{42}. C_2, C_3, C_4, C_5, and C6 are plunger type air-trimmer capacitors for the respective bands - A, B, C, D, and E. The variable tuning capacitors, C_{40} and C_{42}, are of the split-stator type and are controlled from the main tuning knob. The band spread capacitor, C_{40}, is connected in series with C_{41}, the combination being in parallel with C_{42} - the main tuning capacitor. Thus a variable capacitance is effectively placed in series with C_{40}, and its value bears a definite ratio to that of C_{42}, the effective capacitance range of C_{40} being approximately a constant percentage of that of C_{42}, irrespective of its setting.

The range switch in the "A" position shorts out C_{40}, effectively paralleling C_{41} and C_{42}.

Separate coils are used for each band, and all primary windings not in use are short-circuited, as well as all secondaries for lower frequencies.

The range switching of the r-f and detector circuits is similar to that of the antenna circuits.

Separate windings are employed in the oscillator stage for each position of the range selector. The inherent stability of this circuit provides minimum frequency drift which is especially advantageous for high-frequency reception. The locally generated signal is capacitance coupled to the cathode of the RCA-6J7 first-detector.

I-F Amplifier - The intermediate-frequency amplifier consists of two RCA-6K7 tubes in a two-stage, transformer-coupled circuit. The windings of all three i-f transformers are resonated by a combination of fixed capacitors, and adjustable molded-magnetite cores (both primary and secondary) tune to 460 kc. The crystal filter is introduced between the first i-f transformer secondary (L_{39}) and the control grid of RCA-6K7 first i-f amplifier tube by means of the crystal switch S-11, Figure 4.

Detector and Noise Limiter - The signal, as obtained from the output of the last i-f stage, is detected by an RCA-6H6 twin-diode tube (No. 1 diode), the useful audio-frequency (a-f) and direct-current (d-c) components appearing across resistor R_{22}. The No. 2 diode of this same Radiotron is effectively placed in shunt with R_{22}, with its anode biased approximately 20 volts negative with respect to the cathode, by means of the bleeder resistor R_{44}. Excessive signals, or bursts of static, of magnitude great enough to cause the voltage across R_{22} to exceed approximately 20 volts will cause the No. 2 diode to draw current, or present a low impedance across R_{22}, thereby acting as a noise limiter.

Audio System - The control grid of the RCA-6C5 first audio amplifier is connected directly to R_{22}, the tube functioning as a diode-biased voltage-amplifier. The output of this tube is resistance-capacitance coupled to the control grid of the RCA-6C5 audio-driver, potentiometer R_{38} functioning as the volume control. The output of the driver stage is transformer coupled, through T_1, to the control grids of the RCA-6F6 push-pull, power-output tubes. The output of this stage is transformer coupled, through T_2, to the voice coil of the electro-dynamic loudspeaker. Insertion of a telephone plug in the headphone jack J_1 disconnects the voice coil from the secondary of T_2 and substitutes a dummy resistor R_{39} in its place. The tip and sleeve of the plug are connected across the input circuit of one of the RCA-6F6 power tubes, through capacitor C_{74}, for headphone reception.

The "Fidelity" or tone control comprises the combination of capacitor C78 and variable resistor R_{41} shunting the secondary of T_1.

Automatic Volume Control - The operation of the RCA-6R7 Automatic Volume Control Tube and associated circuits is as follows:

Under conditions of no signal, the cathode current flowing through resistor R_{27} develops a voltage across R_{27} of approximately 29 volts. This is in opposition to the approximate 20 volts drop across the bleeder resistor R_{44} thereby making the cathode approximately 9 volts positive with respect to chassis-ground, or to the anode DP-1. When signals are present, a portion of the i-f voltage is applied to anode DP-2, through Capacitor C_{90}, for rectification. The d-c voltage which develops across resistor R_{28} is applied to the control grid of the RCA-6R7 through a resistance-capacitance filter, making the grid more negative with respect to cathode, in turn reducing the cathode current or voltage drop across R_{27}, and consequently making the cathode less positive with respect to anode DP-1 than under the condition of no signal. Sufficient signal will cause the cathode to become negative with respect to diode DP-1; current will then flow through this circuit causing a voltage drop across R_{30}, which is applied as automatic control-grid bias to the r-f, first-detector, and i-f tubes through suitable resistance-capacitance filters.

Noise Suppressor - The Noise Suppressor consists of an RCA-6J7 whose plate circuit effectively shunts the input circuit of the audio-driver stage, and a means of making the shunting plate impedance very high for desired signals, and very low for undesired noise impulses of short duration and amplitude greater than the desired signal. The plate impedance will be very high for control-grid bias values sufficient to cause plate-current cut-off, and low for bias values which will permit plate current to flow. The audio signal appearing across resistor R_{37}, and consequently across the RCA-6C5 audio driver input circuit will, therefore, depend upon the ratio of the plate impedance of the Noise Suppressor Tube to the resistance of R_{36}, the series combination being essentially a voltage-dividing network. When the plate impedance is high, the ratio will be high, and practically the total audio voltage appearing across resistors R_{32} and R_{33} will appear across the plate circuit. The converse will occur with a low plate-impedance. In operation, the bias is adjusted just below the point of plate current cut-off by means of the movable arm on R_{27}. Noise impulses of short duration, tending to make the grid more positive, will cause the plate impedance to be low during these impulses with a consequent reduction of input to the audio driver during these intervals.

Electron-Ray-Tuning-Indicator - An RCA-6E5 cathode-ray tuning tube is used as a means of visually indicating when the receiver is accurately tuned to the incoming signal. This tube consists of an amplifier section and a cathode-ray section built in the same glass envelope. A portion of the voltage developed across resistor R_{22} is used to actuate the grid of the amplifier section. Maximum voltage is applied to this grid when the receiver is tuned to resonance with an incoming carrier. This condition is evidenced by minimum width of the dark sector on the fluorescent screen.

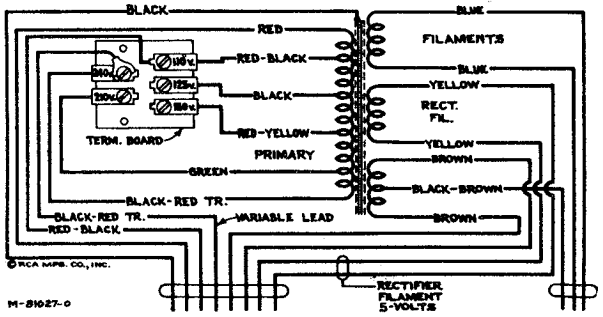

Figure 7—Universal Transformer

Perform alignment in proper order tabulated below, starting with No. 1 and following all operations across, then No. 2, etc. Adjustment locations are shown by Figures 8, 9 and 10. Holes are provided in the left side of the lower r-f unit shield to enable a tuning check with the RCA Stock No. 6679 Tuning Wand.

The RCA Stock No. 12636 Adjusting Tool has been designed for loosening and retightening lock-nut and for making the plunger adjustment on the plunger-type air-dielectric trimming capacitors.

Cathode-ray alignment is preferable; the connections to the chassis are shown on Figure 5. If an output indicator is used, connect it across the loudspeaker voice coil and advance the receiver volume control to full-volume position. Turn AVC - CW Selector to "MOD. AVC OFF"; Signal Input clockwise. Turn Noise Suppression control to extreme counter-clockwise position. Adjust Signal Input control to "100". Set AVC - CW Selector to "MOD. AVC OFF".

Connect the "Low" output terminal of the test oscillator to the receiver chassis for all alignment operations. Regulate the output of the test oscillator so that the signal applied to the receiver is the minimum which will permit an accurate output observation.

The term "Dummy Antenna" means that device which must be connected between the "High" test oscillator output and the point of connection to the receiver in order to obtain ideal alignment. "No signal, 550-750 kc" means that the receiver should be tuned to a point between 550 and 750 kc where no signal or interference is received from a station or local (heterodyne) oscillator. "Dial setting for image check" means that after alignment is performed following across in proper sequence, the receiver dial should be shifted to the setting specified, without making any other changes, except possibly increasing test oscillator output, at which point image signal should be received. If the image is not received at this dial setting, but at a point approximately 1840 kc below this point in the case of (12) or 1840 kc above this point in the case of (16), it will indicate that the oscillator has been improperly adjusted.

©John F. Rider, Publisher

©John F. Rider, Publisher

Stock No.	Description
	RECEIVER ASSEMBLIES
4427	Bracket - Mounting bracket for beat oscillator control shaft, volume control, fidelity control, sensitivity control, selector switch or suppressor control
13024	Cable - Tuning tube cable and socket
12110	Cap - Beat frequency oscillator coil shield top
12581	Cap - First or third i-f transformer shield top
12607	Cap - Second i-f transformer shield top
11350	Cap - Grid contact cap
13053	Capacitor - 6.8 mmfd (C63)
11998	Capacitor - 115 mmfd (C57, C59, C61, C62)
12404	Capacitor - 120 mmfd (C80)
12406	Capacitor - 180 mmfd (C66)
13331	Capacitor - 390 mmfd (C81)
13052	Capacitor - 470 mmfd (C82, C90)
12104	Capacitor - 560 mmfd (C52)
13054	Capacitor - 1200 mmfd (C54, C55)
12898	Capacitor - 1500 mmfd (C69)
4838	Capacitor - .005 mfd (C75, C76, C77)
4518	Capacitor - .05 mfd (C78)
4836	Capacitor - .05 mfd (C71)
4886	Capacitor - .05 mfd (C53, C65)
4858	Capacitor - .01 mfd (C56, C64, C70, C83, C89)
4839	Capacitor - 0.1 mfd (C58, C60, C67, C73, C74)
13048	Capacitor - 0.25 mfd (C79)
12141	Capacitor - 1 mfd (C68)
13041	Capacitor - 8 mfd (C85)
13046	Capacitor - 8 mfd (C84)
13040	Capacitor - 10 mfd (C72, C86)
13036	Capacitor - 25 mfd (C87, C88)
13299	Coil - Beat frequency oscillator coil and shield (L44, C80, C81, R47)
14429	Collar - Retaining collar for crystal phasing condenser extension shaft complete with set screw
12089	Condenser - Crystal phasing variable condenser and switch (C91, S11)
12085	Core - Adjustable core and stud for Stock #13299
12006	Core - Adjustable core and stud for Stock #12095, 12096, and 12097
12107	Coupling - Crystal phasing condenser extension shaft flexible coupling
12108	Crystal - Filter crystal and case
10907	Fuse - 3 ampere (F1)
14468	Gear - Gear located on band change knob shaft complete with set screws
12128	Jack - Phone jack (J1)
5226	Lamp - Dial lamp
3376	Mounting - Fuse mounting board for 110 volt models - less fuse
4604	Mounting - Fuse mounting board for 250 volt models - less fuse
14467	Plate - Mounting plate and bearing for band change knob shaft - located on front apron of chassis
12261	Resistor - 390 ohms - Insulated 1/4 watt (R14, R18)
11937	Resistor - 2.5 ohms - wire sound 5 watts (R39)
12311	Resistor - 1000 ohms - Insulated 1/4 watt (R11, R20, R49)
13302	Resistor - 10,000 ohms - Carbon type 1/10 watt (R47)
12288	Resistor - 10,000 ohms - Insulated 1/4 watt (R45, R46)
13045	Resistor - 18,000 ohms - Insulated 1/4 watt (R32)
12412	Resistor - 47,000 ohms - Insulated 1/4 watt (R33, R48)
12573	Resistor - 47,000 ohms - Carbon type 1/2 watt (R31)
11282	Resistor - 56,000 ohms - Carbon type 1/10 watt (R21)
13049	Resistor - 56,000 ohms - Insulated 1 watt (R40)
12263	Resistor - 100,000 ohms - Insulated 1/4 watt (R13)
12264	Resistor - 220,000 ohms - Insulated 1/4 watt (R30)
11452	Resistor - 470,000 ohms - Carbon type 1/10 watt (R22)
12285	Resistor - 470,000 ohms - Insulated 1/4 watt (R12, R23, R28, R34, R35, R36)
12013	Resistor - 1 megohm - Carbon type 1/10 watt (R25)
12200	Resistor - 1 megohm - Insulated 1/4 watt (R26, R29)
13044	Resistor - 4.7 megohm - Insulated 1/4 watt (R24)
13050	Resistor - 10 megohm - Insulated 1/4 watt (R37)
13037	Resistor - Voltage divider comprising one 4000 ohm, one 3600 ohm, one 1200 ohm and one 200 ohm sections (R44)
13038	Sensitivity Control - (R17)
14427	Screw - #8-32 x 1/2 headless, cup point set screw for shaft Stock #12105
4119	Screw - #8-32 x 1/4 headless, cup point set screw for coupling Stock #12107 collar Stock #14429 and gear Stock #14468
12105	Shaft - Extension shaft for beat oscillator coil adjustment
14428	Shaft - Extension shaft for crystal phasing condenser
14469	Shaft - Band change knob shaft complete with one "C" washer, one spring washer, and two flat washers
13300	Shield - Coil shield for Stock #13299
16711	Shield - Complete beat oscillator circuit bottom shield
12008	Shield - I-F transformer shield for Stock #12095, 12096, and 12097
14114	Socket - Dial lamp and stand-by lamp socket
4794	Socket - 4 contact 5Z3 Radiotron socket
11197	Socket - 6 contact 6C5 Radiotron socket
11198	Socket - 7 contact 6F6, 6H6, 6J7, 6K7 Radiotron or r-f unit power supply socket
11196	Socket - 8 contact speaker cable socket
11381	Socket - Tuning tube socket and cover
12106	Spring - Tension spring for beat oscillator adjustment shaft
12007	Spring - Retaining spring for core Stock #12006
13042	Suppressor Control - (R27)
13043	Switch - AVC - CW selector switch (S10)
14134	Tone Control and Power Switch - (R41, S9)
12095	Transformer - First i-f transformer (L38, L39, C52)
13035	Transformer - Interstage driver transformer (T1)
12096	Transformer - Second i-f transformer (L40, L41, C57, C59)
12097	Transformer - Third i-f transformer (L42, L43, C61, C62, C66, R42, R22)
11880	Transformer - Power transformer 105-125 volts 50-60 cycle (T3)
11887	Transformer - Power transformer 105-125 volts 25-60 cycle (T3)
11251	Transformer - Power transformer 105-250 volts 50-60 cycle (T3)
13039	Volume Control - (R38)
	R-F UNIT ASSEMBLIES
12806	Board - Antenna and ground terminal board
5237	Bushing - Variable tuning condenser mounting bushing assembly
14430	Cable - R-F unit power supply cable complete with 8 contact male connector
11350	Cap - Grid contact cap
12884	Capacitor - Adjustable trimmer (long) (C6, C16, C25, C27, C31)
12714	Capacitor - Adjustable trimmer (medium) (C2, C3, C4, C5, C12, C13, C14, C15, C21, C22, C23, C24, C28, C29, C32)
14392	Capacitor - 4.7 mmfd (C32)
13001	Capacitor - 8.2 mmfd (C92)
13141	Capacitor - 47 mmfd (C9, C19)
12724	Capacitor - 120 mmfd (C37)
14443	Capacitor - 570 mmfd (C36)
14442	Capacitor - 1050 mmfd (C35)
14441	Capacitor - 1895 mmfd (C34)
14440	Capacitor - 3035 mmfd (C33)
4836	Capacitor - .05 mfd (C7, C17)
11798	Capacitor - .01 mfd (C1, C11, C20)
13138	Capacitor - .01 mfd (C8, C10, C18, C38, C39)
4839	Capacitor - 0.1 mfd (C26)
14431	Coil - Antenna coil B, C, D and E bands (L1, L2, L3, L4, L5, L6, L7, L8)
14434	Coil - Antenna r-f or detector coil "A" band (R-F - L19, L20) (DET - L29, L30) (ANT - L9, L10)
14433	Coil - Oscillator coil - B, C, D and E bands (L31, L32, L33, L34, L35, L36)
14435	Coil - Oscillator coil and shield - "A" band only (L37)
14432	Coil - R-F or detector coil - B, C, D and E bands (R-F - L11, L12, L13, L14, L15, L16, L17, L18) (DET - L21, L22, L23, L24, L25, L26, L27, L28)
14437	Condenser - 8 gang variable tuning condenser (two 4 gang sections assembled C40, C41, C42, C43, C44, C45, C46, C48, C49, C50, C51)
12882	Core - Adjustable core and stud for oscillator coil
14028	Nut - Jamb nut for adjustable trimmer capacitors
14439	Resistor - 100 ohms - Insulated 1/4 watt (R15)
12261	Resistor - 390 ohms - Insulated 1/4 watt (R2, R6)
12311	Resistor - 1000 ohms - Insulated 1/4 watt (R4)
13714	Resistor - 5600 ohms - Insulated 1/4 watt (R3)
12288	Resistor - 10,000 ohms - Insulated 1/4 watt (R8)
12412	Resistor - 47,000 ohms - Insulated 1/4 watt (R10)
13715	Resistor - 68,000 ohms - Insulated 1/4 watt (R1, R5, R7)
14438	Resistor - 100,000 ohms - Insulated 1/2 watt (R9)
12883	Shield - Oscillator coil shield
11280	Socket - 7 contact det. 6J7 or r-f 6K7 Radiotron socket
11278	Socket - 7 contact osc. 6J7 Radiotron socket
12007	Spring - Retaining spring for core Stock #12882
14436	Switch - Range switch (S1, S2, S3, S4, S5, S6, S7, S8)
	DRIVE ASSEMBLIES
14451	Belt - Vernier dial drive belt
14452	Belt - Main or vernier tuning knob drive belt
14444	Dial - Band indicating dial and cam assembly
14478	Dial - Vernier dial and disc assembly complete with set screws
14446	Disc - Indicator pointer drive disc complete with set screws
14464	Drive - Variable tuning condenser dials and drive assembly complete
14475	Gear - 5 tooth segment gear and connecting link for operating band indicating dial
14476	Gear - Segment gear located on range switch shaft complete with set screw
14449	Idler - Drive belt idler pulley assembly less spring
12908	Indicator - Station selector indicator pointer
8051	Link - Band indicating dial link and roller complete with spring
14447	Pulley - Tuning knob shaft and pulley
14470	Pulley - Vernier dial drive belt pulley and drive disc located on left hand tuning condenser shaft complete with set screws
14472	Pulley - Drive belt pulley located on vernier dial shaft - complete with set screws
14473	Pulley - Large pulley for drive belt complete with friction discs - drives station indicator pointer drive disc
14474	Pulley - Large pulley for drive belt complete with friction discs - drives vernier tuning condenser drive disc and pulley
14445	Screen - Dial lamp shield
12993	Screw - #8-32 x 3/8 headless set screw for disc Stock #14446
4119	Screw - #8-32 x 1/4 headless cup point set screw for shaft Stock #14448 Shaft Stock #14471 and pulley Stock #14470 and gear Stock #14476
4387	Screw - #6-32 x 1/4 headless set screw for pulley Stock 14472
5042	Screw - #8-32 x 1/8 headless set screw for vernier dial Stock #14478
14448	Shaft - Indicator pointer shaft complete with set screws.
14471	Shaft - Shaft and socket complete with set screws - connects pulley Stock #14470 to shaft of left hand tuning condenser
8052	Spring - Tension spring for link Stock #8051
14450	Spring - Tension spring for idler
14453	Spring - Friction drive disc tension spring
14454	Spring - Vernier dial shaft tension spring
14477	Stud - Hex head stud for attaching link to gear Stock #14476
	REPRODUCER ASSEMBLIES
13063	Board - Reproducer terminal board
12640	Bracket - Output transformer mounting bracket and clamp
11234	Coil - Reproducer field coil (L47)
11233	Coil - Reproducer neutralizaing coil (L45)
12642	Cone - Reproducer cone and dust cap (L46)
13062	Connector - 7 contact male connector for speaker leads
9720	Reproducer Complete
11229	Transformer - Output transformer (T2)
11886	Washer - Spring washer to hold field coil securely
	MISCELLANEOUS ASSEMBLIES
14455	Cable - 7 conductor speaker cable approximately 72" long complete with 1 male and 1 female connectors
13542	Connector - 7 contact female connector for speaker cable
16836	Connector - 8 contact male connector for speaker cable
13066	Disc - Colored disc and mask for stand-by escutcheons
14456	Escutcheon - Tuning tube and stand-by light escutcheon for Table Model
14457	Escutcheon - Tuning tube and stand-by light escutcheon and crystal for Rack Model
13064	Escutcheon - Station selector dial escutcheon for Rack Model
14458	Escutcheon - Station selector dial escutcheon and crystal for Table Model
14460	Escutcheon - Oscillator control, volume control, band spread, range switch, tuning selectivity and fidelity, knob escutcheon
14461	Escutcheon - Phone jack and suppressor control knob escutcheon
14462	Escutcheon - Stand-by switch and sensitivity control knob escutcheon
12595	Knob - Station selector knob for Rack Model
14459	Knob - Station selector knob for Table Model

MODEL ACR 175
Transformer and
Antenna Data

RCA MFG. CO., INC.

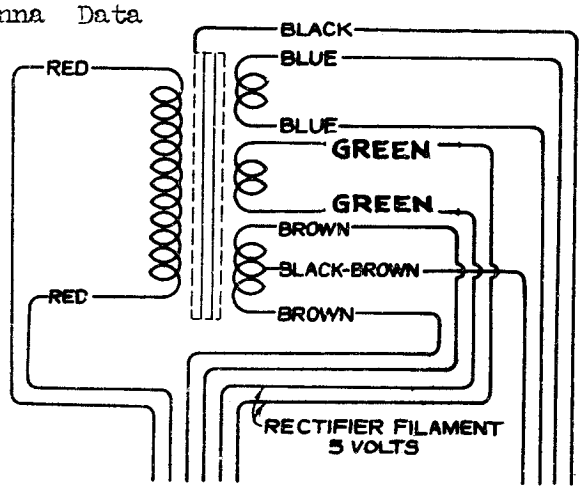

Pri. Res.—5.79 ohms, total
Sec. Res.—420 ohms, total

(a)—Standard Power Transformer

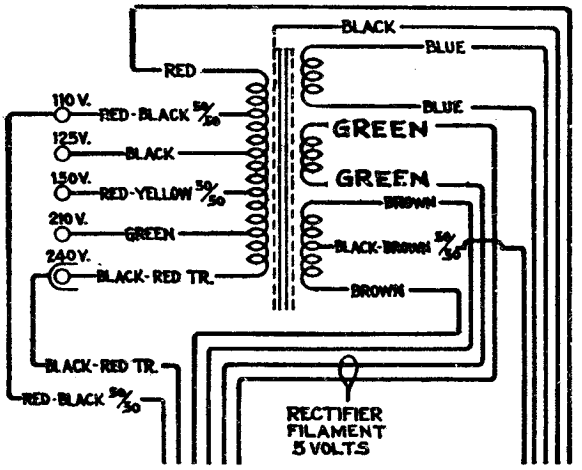

Pri. Res.—7.54 ohms, total
Sec. Res.—268 ohms, total

(b)—Universal Transformer

Figure 8—Transformer Wiring and Connections.

Band	Length each side	Coupling Transformer	
Meters	*Feet*	*Type*	*Stock No.*
160	130	Aircraft Doublet	M.I. 5782
80	65	Aircraft Doublet	M.I. 5782
40	33	Standard Doublet	4743
20	16½	Standard Doublet	4743
10	8	Standard Doublet	4743
5	4	Standard Doublet	4743

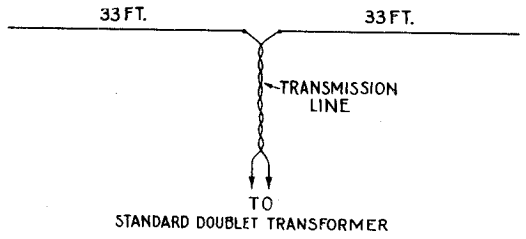

(a) Single Doublet Antenna for 40 Meter Band

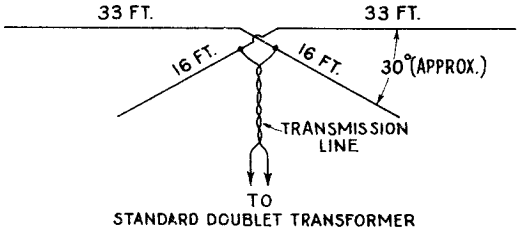

(b) Double Doublet Antenna for 40 and 20 Meter Bands

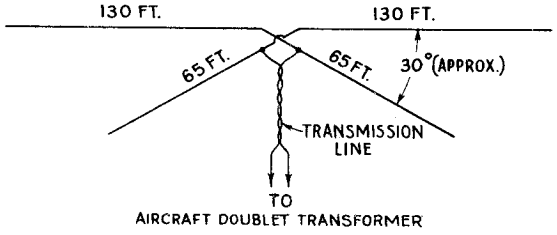

(c) Double Doublet Antenna for 160 and 80 Meter Bands

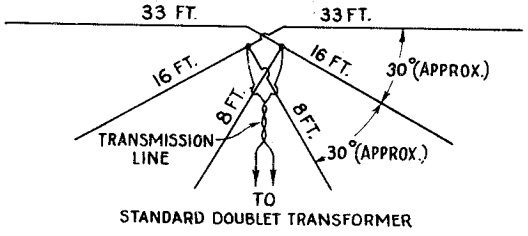

(d) Triple Doublet Antenna for 40, 20 & 10 Meter Bands

Figure 4—Dipole Antenna Crossover Connections.

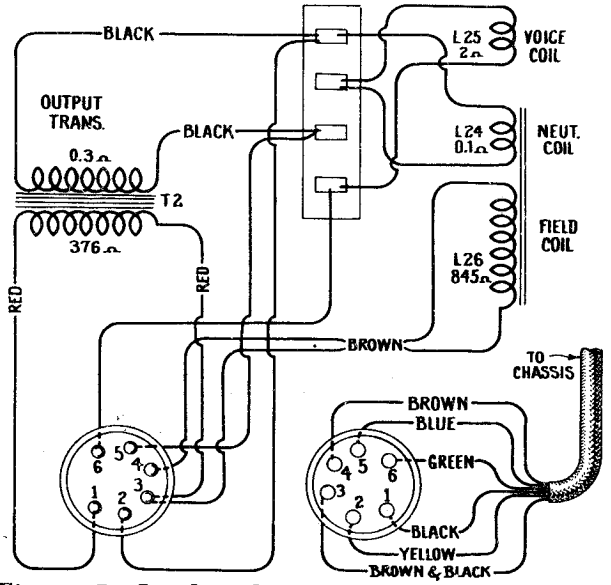

Figure 7—Loudspeaker Wiring and Connection Diagram

©John F. Rider, Publisher

RCA MFG. CO., INC.

MODEL ACR 175
Schematic, Socket

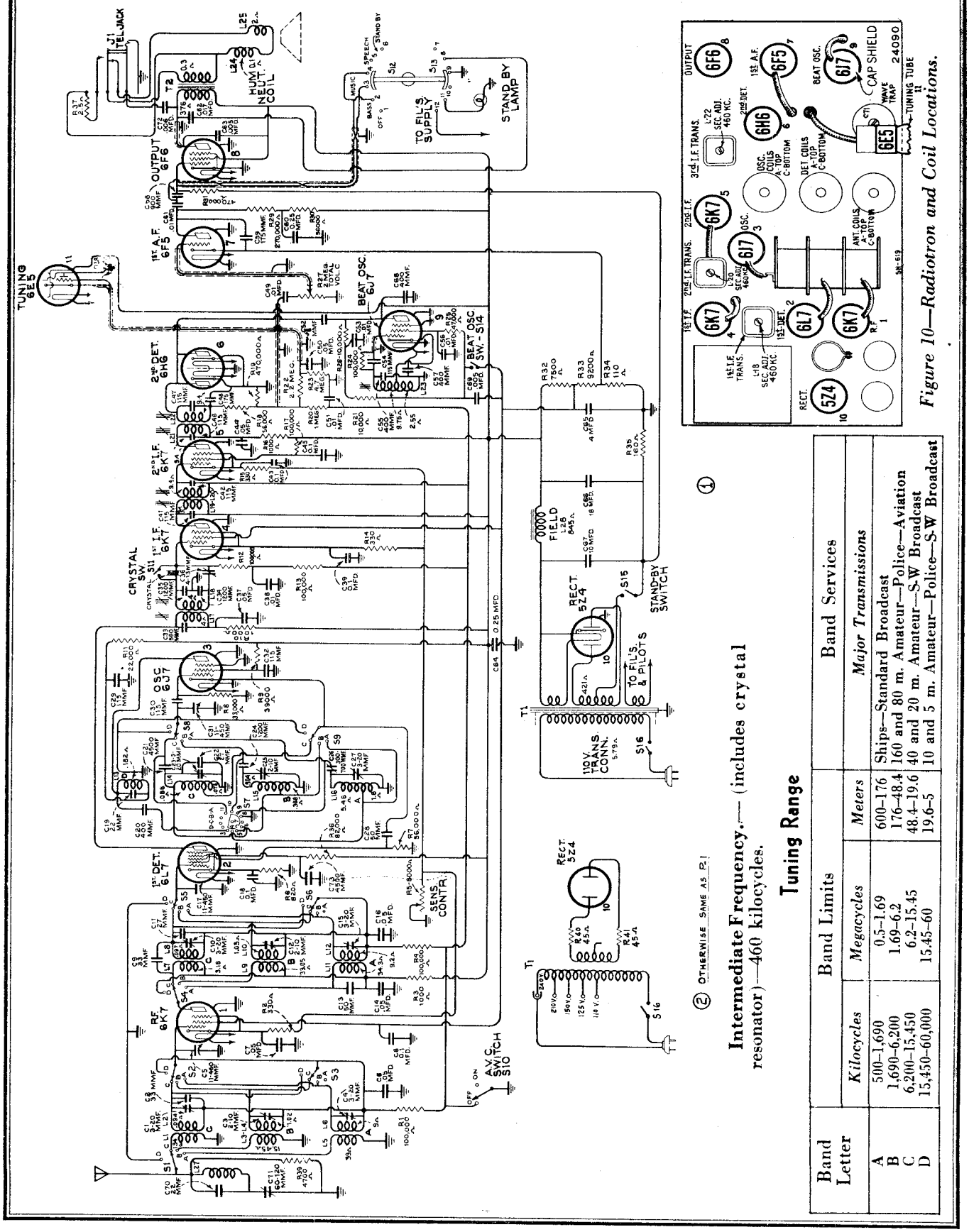

Figure 10—Radiotron and Coil Locations.

① **Intermediate Frequency.**— (includes crystal resonator)—460 kilocycles.

② OTHERWISE SAME AS P.1

Tuning Range

Band Letter	Band Limits		Band Services	
	Kilocycles	*Megacycles*	*Meters*	*Major Transmissions*
A	500–1,690	0.5–1.69	600–176	Ships—Standard Broadcast
B	1,690–6,200	1.69–6.2	176–48.4	160 and 80 m. Amateur—Police—Aviation
C	6,200–15,450	6.2–15.45	48.4–19.6	40 and 20 m. Amateur—S-W Broadcast
D	15,450–60,000	15.45–60	19.6–5	10 and 5 m. Amateur—Police—S-W Broadcast

©John F. Rider, Publisher

MODEL ACR 175
Chassis Wiring

RCA MFG. CO., INC.

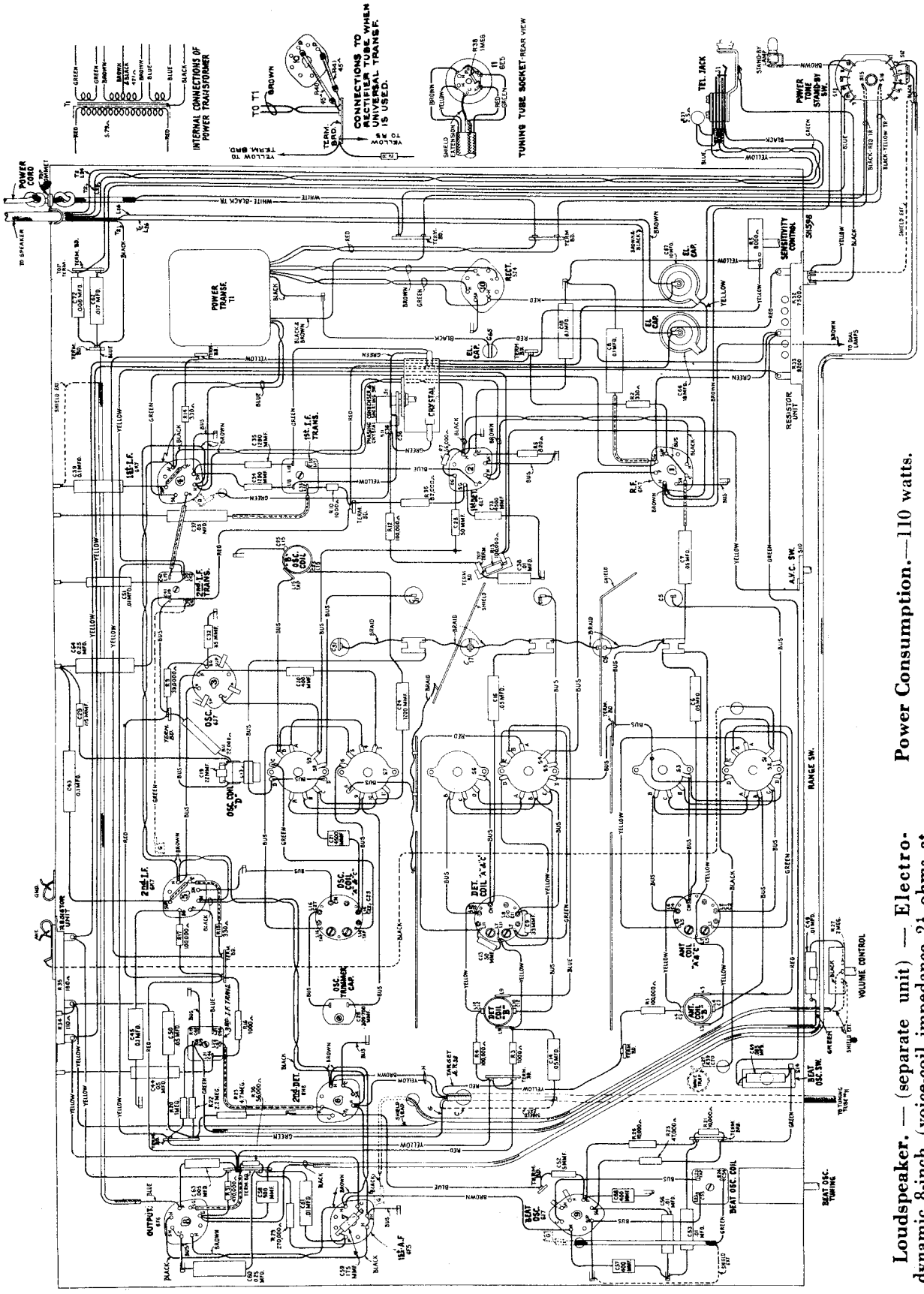

Power Consumption.—110 watts.

Power Output.—2 watts (undistorted); 4½ watts maximum.

Loudspeaker. — (separate unit) — Electrodynamic 8-inch (voice-coil impedance 2½ ohms at 400 cycles).

©John F. Rider, Publisher

RCA MFG. CO., INC.

MODEL ACR 175
Voltage, Trimmers
Power Ratings
Band Spread

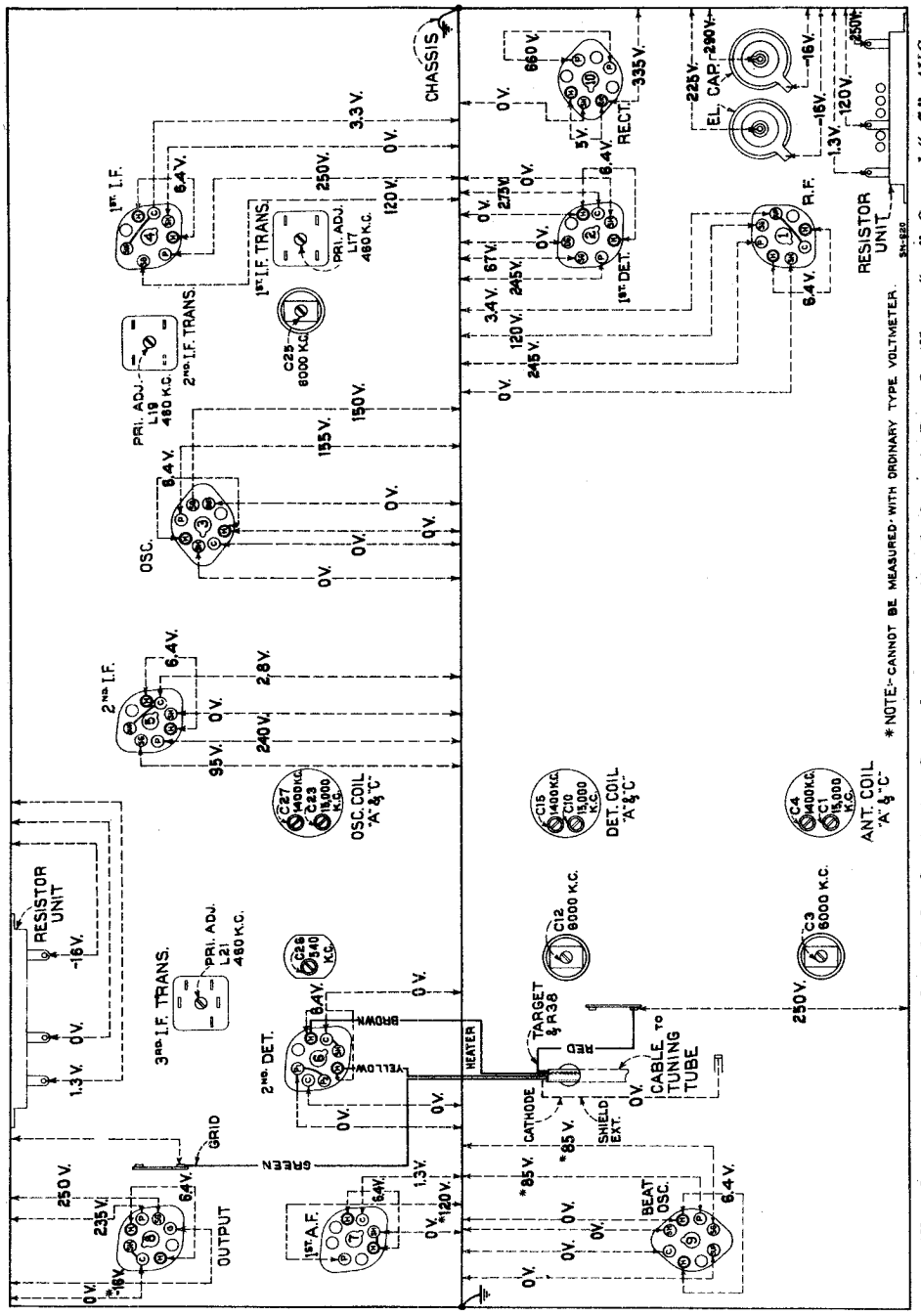

All voltages are measured with the Sensitivity Control at "1" (fully clockwise), Beat-Oscillator "on," Crystal "off," AVC "on," Dial Pointer at 900 Band "A." Grid Cap voltages to ground are "zero," except for the two oscillators.

Figure 9—Radiotron Socket Voltages and Trimmer Locations.

Band		Band-Spread		
Meters	*Kilocycles*	*Pointer Coverage Dial Divisions*	*Slow Speed Knob Angle of Rotation*	
160	1715-2000	366	3590°	10 Rev.
80	3500-4000	141	1380°	3¾ "
40	7000-7300	96	940°	2½ "
20	14000-14400	55	540°	1½ "
10	28000-30000	74	725°	2 "
5	56000-60000	74	725°	2 "

Circuit Data

Circuit.—Superheterodyne with beat-frequency oscillator for c-w reception, crystal filter, automatic volume control, electron-ray indicator with calibrated signal input (sensitivity) control, and class A pentode output system.

Power-Supply Ratings.—See rating symbol on chassis.

Symbol	*Voltages*	*Frequency (cycles)*
B	105–125	25–60
C	100–130; 140–160; 195–250	40–60

As shipped from the factory, rating "C" instruments are connected for 225-250 volts unless prominently specified otherwise on instrument. Any of these, however, can be converted for operation at 100-117, 117-130 or 195-225 volts when required. Three taps are provided on the primary of the power transformer, a diagram of which is given in Figure 8. All taps are brought out to a terminal board on the top of the transformer and conversion can be made without removing chassis.

Tubes

1 RCA-6K7—Radio-Frequency Amplifier.
1 RCA-6L7—First Detector.
1 RCA-6J7—Oscillator.
2 RCA-6K7—Intermediate-Frequency Amplifiers.
1 RCA-6H6—Second Detector and A.V.C.
1 RCA-6J7—Beat-Frequency Oscillator.
1 RCA-6F5—Audio-Frequency Amplifier.
1 RCA-6F6—Power-Output Amplifier.
1 RCA-5Z4—Full-Wave Rectifier.
1 RCA-6E5—Tuning Indicator.

See diagram on label inside cabinet for locations of tubes and grid leads.

©John F. Rider, Publisher

©John F. Rider, Publisher

Alignment

This receiver was aligned at the factory but should be checked regularly (preferably once every six months) to insure best possible results. Adjustments, when necessary, can be performed easily since all trimmers and core screws are accessible through openings in the external case as shown in Figure 9. If desired, the chassis can be withdrawn upon removal of the front panel and four mounting screws.

The extensive frequency range of this receiver necessitates a more or less involved method of alignment. However, if the following directions are carefully applied, the normal performance of the instrument will be obtained.

Equipment.—The equipment required for placing this receiver in proper alignment consists of an RCA Cathode Ray Oscillograph, Stock No. 9545, or RCA Output Indicator, Stock No. 4317, an RCA Full Range Oscillator, Stock No. 9595, a Tuning Wand and a Non-metallic screw driver or equivalent equipment. The necessity for alignment of the r-f circuits and the direction of required change may be tested with a Tuning Wand. Its use is as follows:

The Tuning Wand, which consists of a bakelite rod having a small brass cylinder installed at one end, and a core of finely divided iron at the other, may be inserted into a tuned coil to obtain an indication of the tuning. With a signal being supplied to the receiver at the alignment frequency of the circuit concerned, each end of the Wand should be placed through the center of the coil. Holes are provided in the r-f coil shields for this test. A change in tuning will be produced by the presence of the brass cylinder or iron core and consequent change of receiver output occurs. If there is a decrease of output when either of the two ends is inserted, the tuning is correct and will require no adjustment. However, should there be an increase of output due to the iron core and decrease with the brass cylinder, an increase in inductance or capacitance is indicated as necessary to bring the circuit into line. The trimmer involved should therefore be increased accordingly. If the brass cylinder end causes an increase in output, while the iron end causes a decrease, reduction of inductance or capacitance will be necessary to bring the circuit into alignment. This will be equivalent to decreasing the trimmer concerned.

NOTE.—I-F adjustments cannot be made by this method on this receiver.

End of Wand Used	Change of Signal Output	Change Req'd. of Trimmer Capacity
Brass	Decrease	None
Iron	Decrease	
Brass	Increase	Decrease
Iron	Decrease	
Brass	Decrease	Increase
Iron	Increase	

I-F Adjustment.—Six adjustments are associated with the three i-f transformers. Their locations on the chassis are shown by Figures 9 and 10. Each must be aligned to the basic frequency of the crystal filter (approximately 460 kc.). The last i-f transformer should be adjusted first, the one preceding it next, and the first transformer last. For such adjustments, proceed as follows:

(a) Connect the "Ant." terminal of the Test Oscillator to the RCA 6L7 1st Detector control grid through a .001 mfd. capacitor, and the "Gnd." terminal to chassis ground. Connect the Output Indicator or Cathode-Ray Oscillograph across the loudspeaker voice coil. Adjust the frequency of the Test Oscillator to 460 kilocycles.

(b) Turn AVC "off" and crystal filter "off" then advance the sensitivity control (clockwise) and the volume control (clockwise), to maximum.

(c) Turn the low-frequency tone control to the "speech" position.

(d) Tune the receiver to Band "A", setting the station selector at a point where no interference is received from local stations or from the RCA-6J7 oscillator tube.

(e) Adjust each of the i-f core screws L-22, L-21, L-20, L-19, L-18, and L-17 in sequence for maximum output as indicated on the Output Indicator or Cathode-Ray Oscillograph.

(f) Turn crystal filter "on" and advance selectivity control counter-clockwise to its mid-position "Max."

(g) Change the frequency of the Test Oscillator *very carefully* to obtain maximum output on the Output Indicator or Cathode-Ray Oscillograph. This process will bring the frequency of the Test Oscillator "in step" with the frequency of the crystal filter. The sharpness characteristic due to the crystal filter will be evident in the sudden increase in output to give the maximum value during this tuning operation.

(h) Then adjust each of the i-f core screws *very carefully* for maximum output. Check this alignment with crystal filter "off" for maximum output. The i-f amplifier is now aligned for maximum sensitivity and selectivity; also to the frequency of the crystal filter.

R-F Adjustments.—Connect the Oscillator output to the antenna and ground terminals of the receiver. Keep the Output Indicator or Cathode-Ray Oscillograph attached to the receiver output as above. For each adjustment, use the minimum signal which will give a perceptible indication on the output device. It may be necessary to reduce the signal input (sensitivity) control slightly due to the high degree of sensitivity of the receiver.

Band "A" (a)—Set the range switch of the receiver to its band "A" position and tune the station selector to a dial reading of 1,400 kc. Tune the Test Oscillator to 1,400 kc. and adjust trimmers C-27, C-15, and C-4 in sequence to produce maximum indicated receiver output.

(b) Shift the Oscillator to 540 kc. and tune the receiver to pick up this signal, disregarding the dial reading at which it is best received. Then adjust trimmer C-26, simultaneously rocking the tuning control backward and forward through the signal, until maximum output is obtained from the combined operations. Repeat the alignment of C-27, C-15, and C-4 as in (a) to correct for any change caused by the adjustment of C-26.

Band "B"—Place the receiver range switch in its Band "B" position and tune the station selector to a dial reading of 6,000 kc. Set the frequency of the Test Oscillator to 6,000 kc. Then adjust trimmer C-25 to give maximum receiver output. Two positions may be found which fulfill this condition. The one of least capacitance is correct. To assure that the right peak has been used, tune the *receiver* to 5,080 kc. and increase the Test Oscillator output. The "image" of the 6,000 kc. Test Oscillator signal will be received at this point if C-25 has been adjusted to the proper point of maximum output. *No trimmer adjustments are to be made during this check.* Return the receiver tuning to 6,000 kc., readjust C-25 if necessary, and then adjust the detector and antenna coil trimmers C-12 and C-3 to produce maximum (peak) receiver output as indicated on the output device.

Band "C"—Turn the receiver range selector to its Band "C" position, and set the tuning control to a dial reading of 15,000 kc. Tune the Oscillator to 15,000 kc. Adjust the oscillator parallel trimmer C-23 to produce maximum receiver output. Two positions of the trimmer will be found which fulfill such a condition. The one of least capacitance is correct. To assure that the right position has been used, check for the "image" of the 15,000 kc. signal which will be received at a receiver dial setting of 14,080 kc. if C-23 is correctly adjusted. An increase in Oscillator output may be necessary. No trimmer adjustments should be made during this check. Return the receiver tuning to 15,000 kc., readjust C-23 if necessary, and then adjust the detector and antenna trimmers C-10 and C-1 to give maximum receiver output.

12. Heterodyne Control Setting

Connect a source of unmodulated carrier of the i-f frequency from the grid of the RCA-6L7 first detector to ground. Turn AVC "off," tone control to "speech" position, crystal filter to maximum selectivity, sensitivity control to maximum, audio volume control partially "on," and beat-oscillator "on."

Rotate the heterodyne control knob to left or right until the heterodyne beat is heard.

Change the frequency of the unmodulated carrier from the Test Oscillator *very carefully* for maximum deflection on the Electron-Ray-Tube indicator. Reduce the signal input if necessary so that the Electron-Ray-Tube does not completely close. The test oscillator is now adjusted to the same frequency as the crystal filter.

Set the heterodyne control knob at its zero position and note whether the heterodyne beat is at zero frequency. If not, proceed as follows:

(a) Rotate the heterodyne control knob to obtain zero beat.

(b) Loosen the knob set screw and turn loosened knob on shaft to its "0" or vertical position.

(c) Tighten up set screw.

The heterodyne control is now adjusted to zero beat at the frequency of the crystal filter.

In the event that the frequency drift is such that the zero beat position of the knob is at or beyond the figure "2" on either side, or outside field of rotation, the following adjustment is necessary:

(a) Turn knob until the set-screw-stop on the knob control shaft, behind the front panel, is approximately vertical, then loosen stop with screw driver.

(b) Turn core stud to obtain zero beat. Use a pair of padded long-nose pliers to rotate the core stud in order to avoid injuring thread.

(c) Turn set-screw-stop over to left (facing front panel) to its horizontal mid-position, and adjust knob control shaft to allow 1/32 to 1/16 in. clearance between front panel and adjacent surface of knob.

(d) Tighten set-screw-stop with pliers to grip core stud, then swing stop to vertical and tighten securely with screw driver.

(e) Proceed as first described for setting knob accurately to zero position at zero beat.

NOTE.—Do not pull control shaft loose from bearing bracket when adjusting core stud.

13. Radiotron Socket Voltages

The voltage values indicated from the Radiotron socket contacts to ground on Figure 9 will serve to assist in locating causes for faulty operation, when existent. Grid cap voltages to ground are zero, except in the cases of the two oscillators the readings of which are not dependent upon power supply but upon the oscillatory condition. Each value as specified should hold within ±20% when the receiver is normally operative at the rated supply voltage. Variations in excess of this will usually be indicative of trouble in the basic circuits. The voltages given on the diagram are actual operating values and do not allow for inaccuracies which may be caused by the loading effect of a voltmeter's internal resistance. This resistance should be duly considered for all readings. The amount of circuit resistance shunting the meter during measurement will determine the accuracy to be obtained, the error increasing as the meter resistance is comparable to or less than the circuit resistance. For the majority of readings, a meter having an internal resistance of 1,000 ohms per volt will be satisfactory when the range used for each check is chosen as high as possible consistent with good readability.

14. Wave Trap Adjustment

With the receiver in operation using its normal antenna, tune station selector to the point at which the intermediate frequency interference is most intense. Then adjust the wave trap trimmer to the point which causes maximum suppression of the interference. This trimmer is adjusted to 460 kc. during manufacture; however, local conditions may require a readjustment, depending upon the interfering frequency.

10: Circuit Arrangement

A schematic diagram of the complete circuit is shown in Figure 3, a wiring diagram illustrating the wiring layout of the radio chassis, and the wiring and connections between radio chassis and front panel controls, is detailed in Figure 6. The loudspeaker wiring diagram and connections to chassis are shown in Figure 7.

The circuit is based on the superheterodyne principle. The radio frequency and audio frequency amplification are balanced in such a manner that the maximum of performance is obtained. The main circuit features are as follows:

(a) **Tuned Circuits.**—A three-section variable condenser tunes the secondary of the antenna transformer, the secondary of the detector input transformer, and the oscillator coil on the A, B and C bands. The D band has only its detector and oscillator tuned. Each tuning range has its own group of r-f and oscillator coils which are selected as desired by operation of the band-change switch. Six adjustable inductance (iron-core) tuned circuits are used in the i-f system, each resonating at 460 kilocycles.

(b) **Band D Tuning.**—The r-f stage is idle when the range switch is turned to its band D position and the signal is fed from the antenna directly to the first detector input circuit. The inductance of this circuit consists of a short length of bus wire to which the antenna lead is tapped at a definite predetermined point. The total length of this inductive wire from the stator of the tuning capacitor to ground represents the secondary of a high frequency auto transformer, while the inductive section, included between the antenna lead tap and ground, forms the primary. Alteration of the dimensions and position of this wiring will change the tuning alignment of the circuit resulting in total lack of operation or seriously poor operation. *It is therefore necessary when servicing to avoid changes in the wiring which includes band D detector and oscillator r-f circuits, unless the arrangement is restored to its exact original condition.* Similar caution should be observed when exchanging by-pass capacitors in these same circuits, since their values, physical positions, length of leads, quality of dielectric and other features are critical, and variations will definitely affect operation of the receiver. The small heater by-pass capacitors and ground terminals installed at the tube sockets are very important in this respect.

(c) **Oscillator Stage.**—The heterodyne oscillator circuit used in this receiver is an improved type, having exceptional frequency stability and uniformity of output over its various tuning ranges. It operates on fundamental frequencies which are fed to the first detector hexode tube (RCA 6L7) on an auxiliary mixing grid. The oscillator generates a signal which is at all times above the frequency of the incoming signal by 460 kilocycles. As shown by the schematic diagram, the cathode of the oscillator tube is above ground potential for r-f while the plate is effectively at ground potential. This particular arrangement, together with the plate and screen series resistors, makes the circuit independent of supply voltage variations in regard to stability and uniformity of output. Separate coils are used for each of the tuning ranges. The switching of the different bands is such as to short circuit certain idle coils which would absorb energy from the circuits used.

(d) **Intermediate Amplifier.**—Two stages of i-f amplification comprising three inductively tuned transformers and two RCA 6K7 tubes are arranged in cascade to operate at 460 kilocycles. The transformers have their primaries as well as their secondaries tuned by adjustable iron cores. Litz wire is used for the windings of all three transformers in order to provide the proper selectivity and gain. The crystal filter is introduced in the first i-f circuit by means of the crystal switch S-11 (Figure 3). A variable air-dielectric capacitor C-36 is operated by the selectivity control.

(e) **Detection and AVC.**—The modulated signal as obtained from the output of the i-f system is detected by an RCA 6H6 double diode tube. The audio frequency secured by this process is passed to the a-f system for amplification and final reproduction. The d-c voltage which results from detection of the signal is used for automatic volume control. This voltage which develops across resistor R-19 is applied as automatic control grid bias to the r-f, first detector and i-f tubes through suitable resistance capacitance filters. A portion of the audio voltage is passed to the volume control through capacitor C-49. The variable resistor (R-27), a manually controlled acoustically tapered potentiometer, selects the amount fed to the first a-f stage.

The frequency generated by the beat-oscillator (457 to 463 k.c.) for c-w reception is applied to the diode plate of the RCA-6H6 second detector tube through the capacitor C-52. This frequency mixes with the incoming intermediate frequency to produce an audio-frequency note which can be heard readily in the loudspeaker or phones. The movable iron core, adjusted by the heterodyne control provides a variable inductance which acts as a vernier control for adjustment of the oscillator output frequency over the required a-f range on either side of the signal intermediate frequency.

(f) **Tuning.**—The electron-ray tuning tube (RCA-6E5) functions as amplifier and indicator. The indicator section comprises a luminescent screen, cathode and control electrode. The detected signal from the receiver is applied through the amplifier section to the control electrode of the indicator section. This control electrode affects the electron stream emitted from the cathode so that the size of the triangular "shadow" on the luminescent screen is determined by the strength of the incoming signal. The actual strength of the incoming signal may be measured by means of the signal input sensitivity control, which adjusts the variable resistor R-5 (8,000 ohms maximum), from ground to the cathode circuits of r-f and i-f tubes.

(g) **Audio Stage.**—The a-f component selected by the arm of the volume control is amplified in the first audio-frequency tube (RCA-6F5). It is then fed to the output tube (RCA-6F6) by means of a resistance-capacitance coupling. This tube is connected as a pentode for best reception and sensitivity. The plate circuit of same is matched to the voice coil of the electrodynamic loudspeaker through a step-down (output) transformer. *Audio tone control* is effected by means of a three-position switch: (1) In the "bass" position the capacitor C-58 (in the RCA-6F6 control grid circuit) is shorted out, and the capacitor C-62 (across the plate circuit) is grounded. This allows full "lows" and reduces the high-frequency response. (2) In the "music" position capacitor C-58 is still shorted out, maintaining the low-frequency response, but C-62 is not grounded and thus also allows full "highs," and (3) In the "speech" position C-58 is introduced into the circuit reducing "lows" and C-62 still allows full "highs."

The phone jack is connected between the high side of the primary winding and ground of the output transformer.

(h) **Power.**—All power voltages are obtained from a full-wave rectifier and filter system connected to the a-c line. The loudspeaker field coil is excited from this system and serves as a filter reactor.

The power transformer may be either the "Standard" or the "Universal" type, according to particular requirements, dependent on the power supply. Diagrams showing wiring connections and color coding of leads, together with primary and secondary resistances, are given in Figure 8.

(i) **Wave Trap.**—The wave trap in the antenna circuit is designed for suppression of interference and includes suitable capacitance, resistance and inductance with a variable capacitor for readjustment to produce maximum effect on any long wave interference in the vicinity of the I.F. frequency.

Controls

All controls are located upon the front panel and are identified by adjacent markings.

(a) **Power Switch and Tone Control.**—The first control on the left is a five-position knob operating the a-c line power switch, high-frequency tone control ("Bass"), full tone range contact ("Music"), low-frequency tone control ("Speech"), and "Stand-by" switch, in the sequence given as the knob is turned in a clockwise direction. Power is "off" with this knob in its fully counter-clockwise position. The "Bass" position eliminates "highs" and therefore emphasizes low tones. It reduces static interference due to restriction of the audio response range. The "Music" position gives full tone range reproduction. The "Speech" position re-

©John F. Rider, Publisher

duces the "lows" and emphasizes the high tones, thus clarifying "boomy" voice reception. The "Stand-by" position disconnects all plate and screen grid tube-supply voltages but leaves the filament supply turned on to keep the receiver "warmed up" and ready for instant operation. It also illuminates the "Stand-by" lamp on the left-hand side of the dial. The "Stand-by" is of special use for eliminating the clicks or thumps of the telegraph transmitter, for preventing acoustical feed-back from a phone transmitter, or an adjacent transmitter from blocking the receiver.

(b) **Signal Input Control.**—The second control from the left rotates on a scale calibrated from 1 to 10,000 and its setting indicates the strength in microvolts of any signal delivered to the receiver, when its adjustment is made in conjunction with the electron-ray tube [see next paragraph (c)]. This control is calibrated on a logarithmic scale by means of a series of dots. The markings are labelled for the major settings only, and the points between these major markings represent respectively two and five times the lower indicated value as the knob is turned in a counter-clockwise direction (1, 2, 5, 10, 20, 50, 100 — —).

(c) **Electron-Ray-Tuning Tube.**—The green illuminated *Electron-Ray-Indicator Tube* (RCA-6E5) at the right-hand side of the dial near the top of the front panel is a visible guide to precise tuning. The deflection of the electron stream by the signal voltage causes a narrowing of the darker sector. Maximum deflection, (*i. e.*, when the area of the light sector is at a maximum) indicates that the receiver is tuned to exact resonance.

Since the electron-ray tube gives a reading of signal strength (at the 2nd detector) it is used in conjunction with the *Signal Input Control* to measure signal input. Tune signal to exact resonance, as just described. Rotate the *Signal Input Control* counter-clockwise to reduce the voltage on the *electron-ray tube*. The point at which a slight deflection (1/64-inch) of the dark sector in the *electron-ray tube* occurs is the value in microvolts of the signal input to the receiver. For code reception the correct setting of the *Signal Input Control* to measure signal input is that at which the light green area just commences to flicker.

When measuring signal strength in microvolts it is immaterial whether AVC control switch is "on" or "off."

The calibrated signal input scale reads microvolts direct for the 160, 80, 40 and 20 meter amateur bands. For the 10 and 5 meter bands, multiply the reading by 10 to obtain microvolts.

The absolute accuracy of signal input values depends upon the sensitivity of the receiver. This is determined by accuracy of alignment, condition of tubes, value of line voltage and similar factors. Relative readings between two or more stations of different signal strengths always give dependable results for comparison. Signal input measurements are also useful for making tests on different types of antennas, for reporting improvements to transmitters at distant amateur stations, and for making charts of signal strength variations.

(d) **The Selectivity Control** introduces the crystal filter into the i-f circuit for single-signal reception of c-w telegraph or telephone transmission. Crystal phasing is performed by means of an air-trimmer capacitor. In its midway position marked "Max." the crystal circuit is balanced and maximum selectivity is obtained. This setting is characterized by minimum background noise. In the extreme clockwise position the crystal is short circuited by means of the crystal switch. Other positions broaden the crystal selectivity curve on one side of resonance and cause a rejection dip on the other side. They are useful for phone reception through severe interference.

NOTE—The *Tone Control* should always be turned to "Speech" when the *Crystal Selectivity Control* is in use. This reduces the "lows" which cause instability and flutter under conditions of extreme selectivity.

Four curves are given herewith which illustrate the effect of the *Crystal Selectivity Control*. (See Figure 5.)

(e) **The Automatic Volume Control Switch** eliminates automatic-volume-control action in order to obtain best reception of slow-speed code transmission and to avoid thumping.

(f) **The Tuning Control** is a double knob. The section for rapid tuning is adjacent to the receiver panel and has a speed reduction ratio of 20:1. The second section, in front of the latter and on the inside shaft, is for precise adjustment and has a speed reduction ratio of 100:1. The combination of the high ratio tuning drive and the vernier-index dial make precise and easy tuning readily attainable.

(g) **The Range Selector** selects any one of the four scales of which the frequency limits are tabulated under "Electrical Specifications-Tuning Range" (Section 3). The lettered dial scales correspond to the lettered *Range Switch* positions.

(h) **The Volume Control** is connected in the audio-frequency circuit and increases the output level with clockwise rotation as indicated. It alone is used to regulate volume when the *Automatic Volume Control* is switched "on." However, with the AVC switch "off," the *Signal Input Control* must be used as well, in order to prevent overloading of the Second Detector.

(i) **The Beat Oscillator Switch** serves to interrupt screen and plate-supply voltage to the beat-frequency oscillator tube. The beat-oscillator stage can be rendered inoperative at any time, but, since the filament remains heated continuously, is ready for instantaneous operation.

(j) **The Heterodyne Control** governs the beat-oscillator output frequency over a limited a-f range by means of an iron-core solenoid adjustment (induction tuning) within the beat-oscillator tuning coil. It is calibrated in kilocycles on either side of the normal resonant position (zero beat). In order to obtain a beat note of a desired frequency it is first necessary to tune the receiver to zero beat with the *Heterodyne Control* set at "0," and then to rotate the *Heterodyne Control* to the desired a-f setting.

NOTE—It is important that the "0" position on the *Heterodyne Control* scale correspond *exactly* with the crystal frequency. The proper method of *setting* is given under Service, Section 12, page 17.

For c-w reception this control should be set at the desired beat frequency which may be on either side of the "0" position. The human ear is most sensitive at frequencies between 500 and 1500 cycles and settings of this order should therefore be made. The *Selectivity Control* then turned to "Max." has the effect of almost completely suppressing any audio-image which may be produced by a station at a frequency a few kilocycles removed from that of the desired station, causing a beat of nearly equal pitch. The curves (Figure 5, page 8) make this apparent. With the *Crystal Selectivity Control* in an intermediate position, adjustment and tuning may be made to place in the "rejection dip" an interfering station within a few hundred cycles of the desired one. The required beat-note is then obtained by adjustment of the *Heterodyne Control*. The higher the beat-frequency used the greater is the audio image.

(k) **The Phone Jack** is on the left end of the cabinet. When a phone plug is inserted in this jack, it simultaneously connects a resistance load across the secondary of the output transformer in place of the voice coil of the electrodynamic loudspeaker. It also connects the phones across the plate circuit of the output tube, a blocking condenser being used to isolate the d-c voltage. The loudspeaker field which is employed as a filter for the rectifier stage, still forms an active part of the circuit when using headphones. By inserting the phone plug part way in the jack both headphone and loudspeaker signals may be obtained. The loudspeaker is connected to the chassis by means of a cable and plug.

7. Dial

The *Tuning Dial* is of the airplane type, semi-transparent, illuminated, and clearly marked. It incorporates a mechanical band-spread system with two vernier scales (outside and central), particularly suited to amateur or other work where precise logging is required. The four main scales are plainly marked with their respective letters—A, B, C, D—and are calibrated directly in megacycles. The amateur bands are shown by solid arcs on the B, C and D scales, together with meter markings in heavy type. The standard and short-wave broadcast bands are indicated by an additional shading line.

The two vernier scales mentioned above are known as the *vernier* and *vernier-index* scales, the former being fully circular and the latter semi-circular.

It will be observed that the *vernier* scale is graduated from "0" to "100" and traversed by the long single-ended red pointer, and that the *vernier-index* scale is graduated from "0" to "9" and traversed by the short double-ended black pointer used for the main frequency scales. The red pointer makes one complete revolution for each unit of travel of the short black pointer on the *vernier-index* scale. Thus, any station may be logged accurately with three digits; for example, if the *vernier-index* reading is between "3" and "4" and the *vernier* reading is "72," then the log number is "372." The index number is always the lower of the two numbers between which the pointer is located. (It may occasionally happen that with the *vernier-index* pointer on or just beyond a digit, the *vernier* pointer may read above 95; the next lower digit is then used as the first of the three figures in the reading.)

In logging stations by this method, the band letter also should be named. For the above example, therefore, the full log number would be "A-372," "B-372," "C-372," or "D-372" depending upon the setting of the range switch.

Band-Spread.—The *Mechanical Band-Spread* incorporated in this instrument is combined with circuit design in such a manner as to render available to the operator the following advantages:

1. Single-control tuning.
2. Precise logging.
3. Ability to reset to a definite frequency without use of reference points.

To assist in operation, a table is given of the tuning knob rotation when tuning through the

Tuning

The r-f amplifier, oscillator and first detector circuits of this superheterodyne receiver are tuned by a three-gang variable capacitor and thus controlled from a single knob. Extremely precise and rapid tuning is attained by means of the dual-ratio vernier-drive system used in conjunction with the gang capacitor as mentioned under "Controls." To tune the instrument for desired reception, proceed as follows:

(a) Turn *Power Switch* "on."

(b) Select position of *Range Switch* at which the band letter corresponds to that frequency scale which includes the desired station or channel.

(c) Set *A.V.C. Switch* "on" and *Beat Oscillator Switch* "off."

(d) Turn *Crystal Selectivity Control* fully clockwise to "Crystal off" position.

(e) Advance *Signal Input Control* fully clockwise for maximum sensitivity.

(f) Advance *Volume Control* clockwise until background noise is heard.

(g) With rear part of tuning knob, rotate black pointer to approximate frequency of desired station, then with the front part make slow adjustment to the exact center of the carrier, as indicated by the *Electron-Ray Indicator*.

(h) **Decrease volume as necessary and set *Tone Control* to "Bass," "Music" or "Speech" for preferred quality of reproduction. Full tone range reproduction is obtained with the knob set to "Music."**

(i) **Silent Tuning** may be obtained by reducing the volume until no signals are heard, and then tuning by means of the visual indications of the electron-ray tube.

(j) **Weak Modulated Signals.**—The beat-oscillator may be used to advantage in locating weak, modulated signals. For this purpose it should be tuned exactly to the intermediate frequency of the receiver by turning the *Heterodyne Control* to "0," so that an audio-frequency note of ascending pitch will be obtained on each side of resonance of the incoming signal when the *Beat-Oscillator Switch* is turned "on." Any other carrier will be tuned to exact resonance when the gang or tuning capacitor is adjusted for "zero beat" and weak signals will be located almost as well as those of greater strength because of the heterodyne "whistle" produced while passing through resonance. After proper adjustment has been made, turn *Beat-Oscillator Switch* "off."

(k) **C-W Signals.**—For c-w (code) reception, the tuning procedure is the same as for modulated signals except that the *Beat-Oscillator* performs a definite rather than incidental function. It is set, not at the intermediate frequency, but slightly above or below so as to provide an audio-frequency beat note when the receiver is tuned to resonance with any carrier. Adjust the pitch with the *Heterodyne Control* knob. Turn *A.V.C. Switch* "off" when receiving slow speed c-w transmission.

(l) **Selectivity.**—The value of the *Crystal Selectivity Control* is most evident on c-w reception. Its importance should not be forgotten in phone reception and for identification of distant stations which are normally lost in the background noise. The curves should be studied carefully before operating the *Selectivity Control*. The following suggestions also may be of value:

1. Tuning is extremely critical with control in the "Max." position and in consequence the movement of the slow speed *Tuning* knob should be *very slow* and deliberate.
2. First locate the desired band or station with control at "Crystal off," i. e. in its position of minimum selectivity.
3. Remember to set *Tone Control* at "Speech" for stable operation of *Crystal Selectivity Control*.

FOR SELECTIVITY CONTROL CURVES, SEE INDEX

Antenna

A most important factor in good reception is the antenna. Both "noise reducing" and "directional" properties as well as a definite "length" to suit the signal frequency are essential antenna requirements for good reception. A special system or one of multiple antennas of the *single-wire* or *doublet* type is therefore necessary. The RCA *Double-Doublet* antenna system consists of *two* doublet antennas having different lengths and therefore different resonance characteristics. They are interconnected so that one will compensate for the weak points of the other throughout the intervening frequency range. A *Triple-Doublet* system of lengths cut to suit individual requirements will give still better results. Be sure to obtain the latest information on RCA Antennas. Dipole lengths, as listed in the following table, connected with the coupling transformers specified, are recommended for the respective amateur bands.

The triple- or double-doublets are most easily applied to those bands for which the same coupling transformer can be used. For example, a double-doublet with an aircraft type coupling transformer would be best for 160 and 80 meters, or with a standard transformer on 40 and 20 meters, but not with either transformer on 80 and 40 meters.

Proper cross connections must be made on all dipole systems as illustrated in Figure 4.

Standard RCA Transmission Line should be used. Lengths are not critical for the above resonant antenna conditions.

REPLACEMENT

Stock No.	Description	List Price
	RECEIVER ASSEMBLIES	
5237	Bushing—Variable tuning condensor mounting bushing assembly—Package of 3	.43
12115	Cable—6-conductor braided reproducer cable approximately 75-in. long—Complete with 6-contact female connector, Stock No. 11934	1.55
11350	Cap—Grid contact cap—Package of 5	.20
11223	Capacitor—Adjustable capacitor (C26)	.46
12077	Capacitor—5 Mmfd. (C52)	.42
11941	Capacitor—22 Mmfd. (C19)	.22
11321	Capacitor—33 Mmfd. (C9)	.26
11289	Capacitor—50 Mmfd. (C13, C28)	.26
11291	Capacitor—115 Mmfd. (C29, C30, C32)	.24
8076	Capacitor—115 Mmfd. (located in beat-oscillator coil, Stock No. 12084) (C54)	.20
11998	Capacitor—115 Mmfd. (C41, C42, C45, C47)	.28
5116	Capacitor—175 Mmfd. (C59)	.18
11590	Capacitor—175 Mmfd. (C48)	.18
11290	Capacitor—400 Mmfd. (C20, C57, C68)	.25
12086	Capacitor—400 Mmfd. Located in beat-oscillator coil Stock No. 12084 (C55)	.25
12104	Capacitor—560 Mmfd. (C33)	.24
11633	Capacitor—900 Mmfd. (C58)	.32
11939	Capacitor—1200 Mmfd. (C34, C35)	.42
12571	Capacitor—1225 Mmfd. (C24)	.20
11287	Capacitor—4500 Mmfd. (C21, C78)	.30
4838	Capacitor—.005 Mfd. (C69)	.20
4868	Capacitor—.005 Mfd. (C63)	.20
11938	Capacitor—.006 Mfd. (C72)	.32
4858	Capacitor—.01 Mfd. (C38, C51, C53, C56, C61)	.25
4624	Capacitor—.01 Mfd. (C49)	.54
11451	Capacitor—.017 Mfd. (C62)	.18
4836	Capacitor—.05 Mfd. (C5, C7, C16, C50)	.30
4886	Capacitor—.05 Mfd. (C14, C37, C44)	.20
5170	Capacitor—0.25 Mfd. (C60, C64)	.25
4841	Capacitor—0.1 Mfd. (C18, C39, C43)	.22
4839	Capacitor—0.1 Mfd. (C8, C45)	.28
11248	Capacitor—4 Mfd. (C65)	1.06
11203	Capacitor—10 Mfd. (C67)	1.18
5212	Capacitor—18 Mfd. (C66)	1.16
12092	Coil—Antenna coil—"A" and "C" bands (L1, L2, L5, L6, C1, C2, C4)	2.24
12098	Coil—Antenna coil—"B" band (L3, L4, C3)	.82
12084	Coil—Beat frequency oscillator coil (L23, C54, C55, R24)	1.70
12093	Coil—Detector coil—"A" and "C" bands (L7, L8, L11, L12, C10, C11, C15)	2.34
12099	Coil—Detector coil—"B" band (L9, L10, C12)	.88
12094	Coil—Oscillator coil—"A" and "C" bands (L14, L16, C22, C23, C27)	2.14
12100	Coil—Oscillator coil—"B" band (L15, C25)	.82
5221	Coil—Oscillator coil—"D" band (L13)	.64
11214	Condenser—3-gang variable tuning condenser (C5, C71, C31)	4.20
12089	Condenser—Crystal switch and phasing control condenser—Less extension shaft (S11, C36)	1.25
11934	Connector—6-contact female connector for reproducer cable, Stock No. 12115	.38
12086	Core—Adjustable core for I.F. transformer, Stock Nos. 12095, 12096 or 12097	.22
12085	Core—Adjustable core and stud assembly—For beat-oscillator coil, Stock No. 12084	.16
12107	Coupling—Extension shaft coupling for Stock No. 12089 phasing control	Price in application
12108	Crystal—Crystal filter and case	14.00
11216	Foot—Chassis foot and bracket—Package of 2	.76
8041	Plate—I.F. or R.F. coil shield locking plate—Package of 2	.12
11244	Resistor—Voltage divider resistor, comprising one 7,500-ohm and one 9,200-ohm section (R32, R33)	1.08
12102	Resistor—Voltage divider resistor, comprising one section of 160-ohm and one section 110-ohm (R34, R35)	.44
11937	Resistor—2.5 ohms—wire wound (R37)	1.12
12432	Resistor—45 ohms—Flexible type (R40, R41)—For use only in models with 110-220-volt power transformer—Package of 5	.60
11932	Resistor—330 ohms—carbon type, 1/10-watt (R14, R15)—Package of 5	.75
11296	Resistor—330 ohms—carbon type, ¼-watt (R2)—Package of 5	1.00
5165	Resistor—820 ohms—carbon type, ¼-watt (R6)—Package of 5	1.00
11935	Resistor—1,000 ohms—carbon type, 1/10-watt (R10)—Package of 5	.75
5132	Resistor—1,000 ohms—carbon type, ¼-watt (R3, R16)—Package of 5	1.00
3381	Resistor—10,000 ohms—carbon type, ¼-watt (R21, R26)—Package of 5	1.00
8070	Resistor—22,000 ohms—carbon type, ½-watt (R11)—Package of 5	1.00

MODEL ACR 175
Parts List

RCA MFG. CO., INC.

Stock No.	Description	List Price
11300	Resistor—33,000 ohms—carbon type, 1/10-watt (R8)—Package of 5	.75
8067	Resistor—39,000 ohms—carbon type, ½-watt (R9)—Package of 5	1.00
11646	Resistor—47,000 ohms—carbon type, ¼-watt (R25)—Package of 5	1.00
11282	Resistor—56,000 ohms—carbon type, 1/10-watt (R7, R18)—Package of 5	.75
5029	Resistor—56,000 ohms—carbon type, ¼-watt (R30)—Package of 5	1.00
8064	Resistor—82,000 ohms—carbon type, ½-watt (R36)—Package of 5	1.00
3118	Resistor—100,000 ohms—carbon type, ¼-watt (R1, R4, R12, R13, R17)—Package of 5	1.00
11281	Resistor—100,000 ohms—carbon type, 1/10-watt (R24)—Package of 5	.75
11323	Resistor—270,000 ohms—carbon type, ¼-watt (R29)—Package of 5	1.00
11172	Resistor—470,000 ohms—carbon type, ¼-watt (R31)—Package of 5	1.00
11452	Resistor—470,000 ohms—carbon type, 1/10-watt (R19)—Package of 5	.75
12013	Resistor—1 Megohm—carbon type, 1/10-watt (R38)—Package of 5	.75
3033	Resistor—1 Megohm—carbon type, ¼-watt (R20)—Package of 5	1.00
11626	Resistor—2.2 Megohm—carbon type, ¼-watt (R22)—Package of 5	1.00
11936	Resistor—4.7 Megohm—carbon type—¼-watt (R23)—Package of 5	1.00
12090	Sensitivity Control (R5)	1.22
4669	Screw—8-32 x 5/32-in. set screw for extension shaft, Stock No. 12105—Package of 10	.25
12103	Shaft—Extension shaft for phasing control, Stock No. 12089	.15
12105	Shaft—Extension shaft for beat-oscillator coil adjustment	.15
5249	Shield—Antenna, detector or oscillator coil shield	.20
12112	Shield—First or third I.F. transformer shield	.28
12111	Shield—Second I.F. transformer shield	.28
12110	Shield—Top cap shield for Radiotron 6J7 beat-oscillator	.14
11195	Socket—5-contact 5Z4 Radiotron socket	.15
11313	Socket—5-contact 6F5 Radiotron socket	.18
11198	Socket—7-contact 6L7, 6F6, 6H6 second I.F. or R.F. 6K7 Radiotron socket	.15
12113	Socket—7-contact 6J7 beat-oscillator Radiotron socket	.16
12114	Socket—7-contact 6J7 oscillator Radiotron socket	.16
11196	Socket—8-contact first I.F. 6K7 Radiotron socket	.15
11381	Socket—Tuning tube socket and cover	.45
12106	Spring—Retaining spring for beat-oscillator shaft, Stock No. 12105—Package of 5	.15
12374	Switch—Beat-frequency oscillator switch (S14)	.55
12109	Switch—Automatic volume control switch (S10)	.30
12088	Switch—Combination power, tone and stand-by switch (S13, S15, S16)	1.00
12091	Switch—Range switch (S1, S2, S3, S4, S5, S6, S7, S8, S9)	3.55
5238	Terminal—Antenna terminal board and clip	.14
12095	Transformer—First intermediate frequency transformer (L17, L18, C33)	1.50
12101	Transformer—Power transformer, 105-125 volts, 25-60 cycle (T1)	5.20
12331	Transformer—Power transformer, 105-130, 140-160, 195-250 volts, 50-60 cycle	5.15
12096	Transformer—Second intermediate frequency transformer (L19, L20, C41, C42)	1.85
12097	Transformer—Third intermediate frequency transformer (L21, L22, C46, C47, C48, R18, R19)	2.52
11649	Trap—Wave-trap (L27, C70, R39)	1.15
12087	Volume Control (R27)	1.84

Stock No.	Description	List Price
	DRIVE ASSEMBLIES	
11952	Dial—Station selector dial scale	.78
12116	Drive—Variable tuning condenser drive assembly—Comprising reflector, bracket, drive, hub and gear assembled	1.35
11982	Fastener—Station selector dial scale fastener—Package of 25	.42
4827	Gear—Spring gear assembly for vernier pointers	1.25
11228	Gear—Vernier pointer drive gear	.42
11303	Indicator—Station selector vernier indicator pointer	.22
4520	Indicator—Station selector indicator pointer	.18
4340	Lamp—Dial lamp—Package of 5	.60
12577	Screw—8-32 x 1¼ in. slotted set screw for drive assembly—Package of 10	.15
12117	Shaft—Dual speed drive shaft for variable condenser drive assembly—Comprising shaft, drive, spool, spring and washer—assembled	.36
11222	Socket—Dial lamp socket	.18
	MISCELLANEOUS ASSEMBLIES	
11192	Clamp—Tuning tube mounting clamp	.12
12122	Escutcheon—Station selector escutcheon	.60
12130	Foot—Rubber foot assembly—Package of 4.	.25
6614	Glass—Station selector dial glass	.30
12128	Jack—Telephone jack (J1)	1.02
12124	Knob—Heterodyne adjustment or selectivity control knob—Package of 5	.70
12123	Knob—Power (Tone), signal input, AVC, range, volume or beat-oscillator control knob—Package of 5	.70
12129	Knob—Station selector knob assembly—Comprising 1 main and 1 vernier tuning knob—Package of 5	2.10
4340	Lamp—Pilot lamp—Package of 5	.60
12120	Panel—Control panel	1.68
12121	Panel—Front panel assembly, complete	5.45
4678	Ring—Spring ring for station selector dial glass—Package of 5	.34
12127	Screw—Chassis mounting screw assembly—Package of 4	.18
12126	Screw—6-32 x ⅜-in. fillister head screw—Used to hold front panel—Package of 10.	.42
12125	Screw—8-32 x 5/16-in. cupped point set screw for knob, Stock No. 12124—Package of 10	.20
4982	Spring—Retaining spring for main tuning knob in Stock No. 12129—Package of 10.	.26
11349	Spring—Retaining spring for knob, Stock No. 12123—Package of 5	.15
11222	Socket—Pilot lamp socket	.18
	REPRODUCER ASSEMBLIES	
11954	Board—Terminal board assembly, with eyelets and lead wire clips	.14
11231	Bolt—Yoke and core assembly bolt and nut	.16
8060	Bracket—Output transformer mounting bracket	.14
11257	Clamp—Cone center suspension clamping nut and screw assembly—Package of 5	.25
11254	Coil—Field coil (L26)	2.00
11233	Coil—Neutralizing coil (L24)	.30
11235	Cone—Reproducer cone (L25)—Package of 5	3.50
11953	Connector—6-contact male connector for reproducer	.28
9658	Reproducer complete—Less baffle assembly	6.16
11253	Transformer—Output transformer (T2)	1.56
11886	Washer—Spring washer—Used to hold field coil securely—Package of 5	.20

The prices quoted above are subject to change without notice

©John F. Rider, Publisher

RCA MFG. CO., INC.

MODEL U 111
Schematic, Voltage
Chassis Wiring

IF PEAK 455 KC

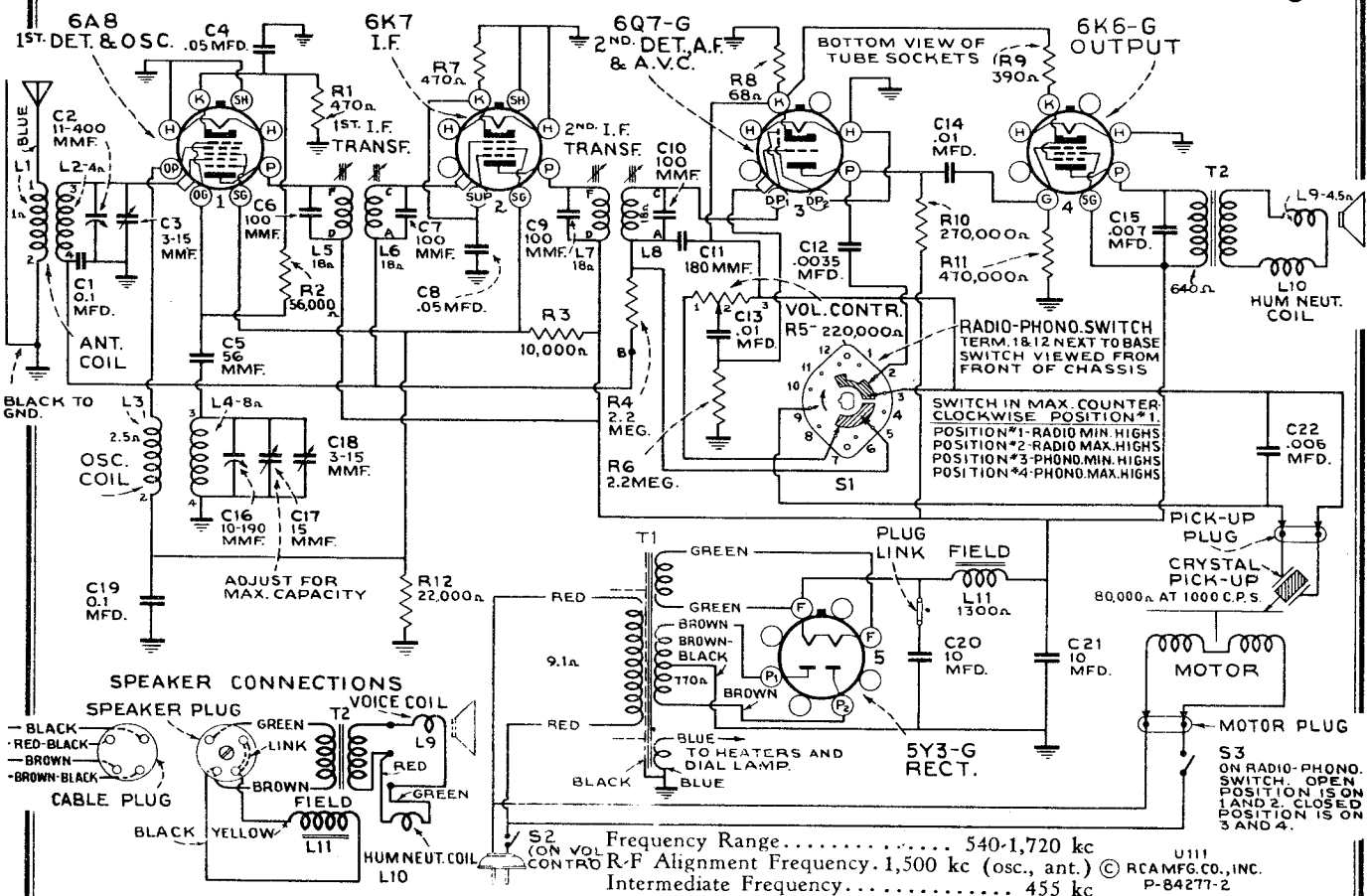

Frequency Range..... 540-1,720 kc
R-F Alignment Frequency. 1,500 kc (osc., ant.)
Intermediate Frequency..... 455 kc

U111
© RCA MFG. CO., INC.
P-84277-2

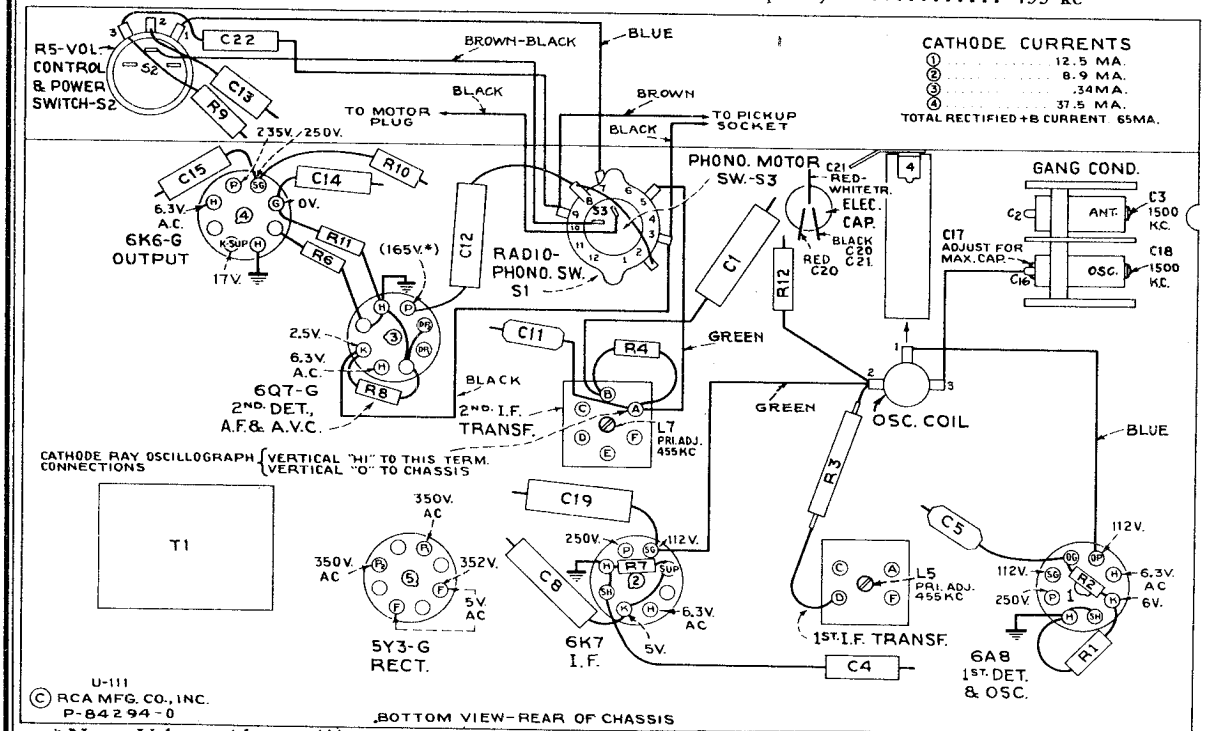

Dial Lamp..... Mazda No. 46, 6.3 volts, 0.25 amps.
Power Output (125-volt, a-c supply)
Undistorted..... 2.0 watts
Maximum..... 3.5 watts

* **Note:** Values with star (*) are **operating** voltages.
Values not starred are actual **measured** voltages.

Measurements made to chassis unless otherwise indicated.

Measurements made with set tuned to quiet point, volume control at minimum, using 1,000-ohm-per-volt meter, having ranges of 10, 50, 250, and 500 volts. (Use nearest range above the specified measured voltage.)

Values should hold within approximately ± 20% for 117-volt 60-cycle supply.

©John F. Rider, Publisher

©John F. Rider, Publisher

LOUDSPEAKER

Type..... 5-inch electrodynamic
V-C impedance..... 5 ohms at 400 cycles

POWER SUPPLY RATINGS

Rating A-6..... 105-125 volts, 60 cycles, 80 watts
Rating A-5..... 105-125 volts, 50 cycles, 80 watts

PHONOGRAPH..... Synchronous (manual starting)
Records..... 10-inch and 12-inch, 78 r.p.m.
Pickup..... Crystal, 80,000 ohms at 1,000 c.p.s.
Average Output of Pickup..... 1½-volts, at 1,000 c.p.s. across ¼ meg. load

PHONOGRAPH MOTOR SERVICE DATA

The synchronous motor used in this instrument is designed to be simple and foolproof. Among its many features are constancy of speed, low power consumption, single moving part, ease of starting, rubber damper, ease of repair, and long life. The parts that may require attention are plainly shown in figure 1. The motor is started by turning "on" the power switch and giving the turntable a clockwise spin with the hand. Smooth starting and running will be insured by keeping the bearings well cleaned and oiled.

Hum and Vibration.—A small amount of hum when starting, decreasing to a negligible amount when running, is normal. If excessive vibration occurs it may be due to:

1. Insufficient lubrication, or any failure that will cause binding.
2. Leather washer not oiled. (Check to make certain that the leather washer is above the steel washer.)
3. Motor not properly supported from motor board.
4. Burrs on poles of rotor or stator. Remove with fine emery cloth.

Removing Rotor.—The rotor and turntable assembly simply rests on the ball bearing at bottom of vertical bearing. Remove by lifting up.

Rotor Adjustment.—Loosen the three screws that hold the rotor to the turntable, insert three 16-mil shims at equal distances around the gap between the rotor and stator, and then carefully tighten the three screws. The top of rotor must be flush with top of stator; add additional steel washers beneath the stator if necessary.

Lubrication.—Oiling points are indicated in figure

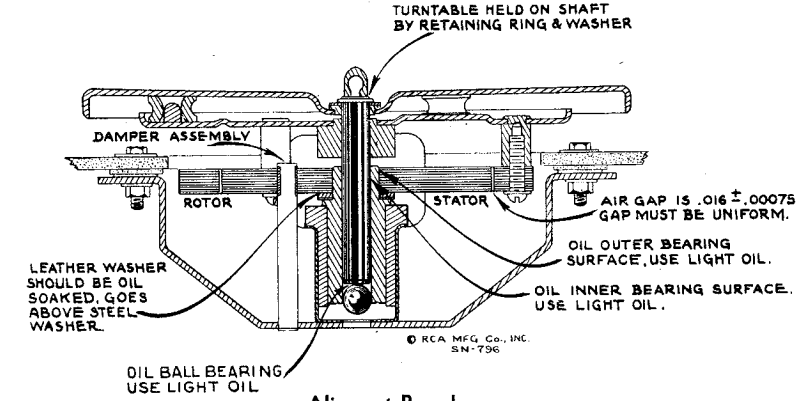

Alignment Procedure

Cathode-ray Alignment is the preferable method. Connections for the oscillograph are shown in the chassis drawing.

Output meter alignment.—If this method is used, connect the meter across the voice coil, and turn the receiver volume control to maximum.

Test-oscillator.—For all alignment operations, connect the low side of the test-oscillator to the receiver chassis, and keep the output as low as possible to avoid a-v-c action.

For additional details, refer to booklet "RCA Victor Receiver Alignment."

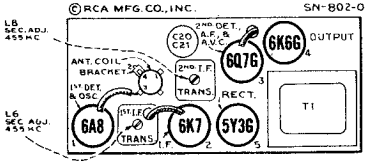

Figure 2—Radiotron and Trimmer Locations

Pre-setting dial.—With gang condenser in full mesh, move dial pointer to coincide with horizontal lines. This is a friction adjustment.

Re-sealing I.F. Adjustment Screws.—After completion of alignment, seal the I.F. magnetite-core adjustment screws with a few drops of household cement.

Steps	Connect the high side of test-oscillator to—	Tune test-osc. to—	Turn radio dial to—	Adjust the following for max. peak output
No. 1	6K7 I-F grid cap, in series with .01 mfd.	455 kc	Quiet point between 550-750 kc	L7 and L8 (2nd I-F Transformer)
No. 2	6A8 1st-det. grid cap, in series with .01 mfd.	455 kc		L5 and L6 (1st I-F Transformer)
No. 3	Antenna lead, in series with 200 mmfd.	1,500 kc	1,500 kc	C18* (osc.) C3 (antenna)

* Trimmer C17 on gang condenser should be screwed clockwise for maximum capacity before adjusting C18.

Service Data

Loudspeaker.—Centering of the loudspeaker is made in the usual manner with three narrow celluloid or paper feelers after first removing the front dust cover. This may be removed by softening its cement with a light application of acetone, using care not to allow the acetone to flow into the air gap. A dust cover should be cemented in place with ambroid upon completion of adjustment.

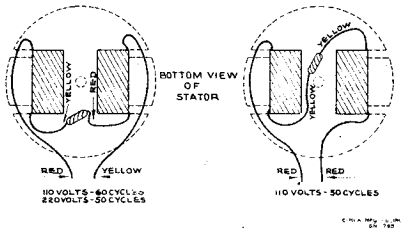

Figure 5—Motor Coil Assembly and Connections

D-C resistance of each coil (for 110 volts, 50 and 60 cycles) is approximately 82 ohms.

Precautionary Lead Dress

1. Dress power leads to phono motor switch away from the audio wiring.
2. Dress power cord and motor cable to end of chassis (free from volume control wiring).
3. Dress pilot lamp lead away from 6Q7G grid.
4. Capacitors C13 and C15 (located at volume control) must be dressed at right angles to each other and as far apart as possible.

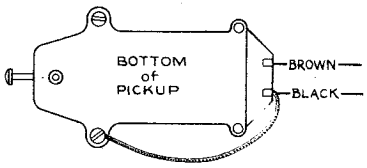

Figure 6—Pickup Connections

REPLACEMENT PARTS

Insist on genuine factory-tested parts, which are readily identified and may be purchased from authorized dealers.

STOCK No.	DESCRIPTION	Unit List Price
	RECEIVER ASSEMBLIES	
4287	Body—Pickup cable connector body	.02
31077	Bracket—Dial bracket, and indicator shaft and bearing assembly	1.00
4286	Bushing—Pickup cable connector bushing and ferrule insert	.25
11350	Cap—Grid connector cap	.05
12723	Capacitor—56 mmfd. (C5)	.35
30904	Capacitor—100 mmfd. (C6, C7, C9, C10)	.25
13003	Capacitor—180 mmfd. (C11)	.35
30303	Capacitor—.0035 mfd. (C12)	.40
4838	Capacitor—.005 mfd. (C22)	.25
5148	Capacitor—.007 mfd. (C15)	.20
14393	Capacitor—.01 mfd. (C13, C14)	.30
30882	Capacitor—.05 mfd. (C4, C8)	.20
30899	Capacitor—0.1 mfd. (C1, C19)	.30
31099	Capacitor—Comprising 2 sections each 10 mfd. (C20, C21)	1.75
30894	Coil—Antenna coil (L1, L2)	.85
31098	Coil—Oscillator coil (L3, L4)	.85
31097	Condenser—2-gang variable tuning condenser (C2, C3, C16, C17, C18)	2.70
30877	Cord—Indicator drive cord	.20
30905	Core—Adjustable core and stud for i-f transformers	.35
31078	Dial—Station selector dial scale and holder	.60
30896	Indicator—Station selector indicator pointer	.40
5226	Lamp—Dial lamp	.17
14281	Resistor—68 ohms, ½ watt (R8)	.20
30539	Resistor—390 ohms, 1 watt (R9)	.22
30546	Resistor—470 ohms, ½ watt (R1, R7)	.20
31106	Resistor—10,000 ohms, wire wound, 3 watt (R3)	.35
30736	Resistor—22,000 ohms, 1 watt (R12)	.22
12286	Resistor—56,000 ohms, ½ watt (R2)	.20
12199	Resistor—270,000 ohms, ½ watt (R10)	.20
12285	Resistor—470,000 ohms, ½ watt (R11)	.20
12679	Resistor—2.2 meg., ½ watt (R4, R6)	.20
30868	Socket—2-contact female socket for motor power cable	.35
5040	Socket—4-contact female socket for speaker cable	.30
14114	Socket—Dial lamp socket assembly	.25
11196	Socket—Radiotron socket	.25
30631	Spring—Indicator drive cord tension spring	.04
4284	Spring—Pickup cable connector spring	.25
31096	Switch—Radio-record switch (S1, S3)	1.20
30902	Transformer—First i-f transformer (L5, L6, C6, C7)	1.80
30903	Transformer—Second i-f transformer (L7, L8, C9, C10)	1.80
30607	Transformer—Power transformer, 105-125 volts, 50-60 cycle (T1)	7.25
30891	Volume Control and power switch (R5, S2)	1.50
4285	Washer—Pickup cable connector insulating washer	.25

STOCK No.	DESCRIPTION	Unit List Price
	MOTOR ASSEMBLIES	
31045	Base—Motor support, damper, and bearing cup assembly	.60
31046	Bearing—Bearing assembly	.70
31041	Cap—Rubber spindle cap	.05
31047	Cushion—Rubber cushion for bearing	.15
31034	Motor—110 volt, 50 cycle—less mounting (M1)	8.90
9841	Motor—110 volt, 60 cycle—complete with mounting (M1)	6.50
31040	Mountings—Turntable top rubber mountings sufficient for one turntable	.25
31037	Rotor—Turntable and rotor lamination assembly complete for 50 cycle operation	4.55
31036	Rotor—Turntable and rotor lamination assembly complete for 60 cycle operation	4.55
31043	Stator—Stator assembly complete with coils and laminations for 50 cycle operation	2.50
31042	Stator—Stator assembly comprising coils and laminations for 60 cycle operation	2.50
31039	Turntable—Finished turntable top plate only—less rubber mountings	.95
4083	Washer—Leather washer	.02
14231	Washer—Metal spacing washer	.02
	PICKUP AND ARM ASSEMBLIES	
31049	Base—Pickup arm pivot shaft and base assembly	.65
4286	Bushing—Bushing and ferrule insert for connector cap	.25
4288	Cap—Pickup cable connector cap	.25
31050	Crystal—Pickup crystal and needle screw	3.75
9842	Pickup Crystal and arm complete with mounting—less connector	6.95
12539	Screw—Pickup needle screw	.22
	REPRODUCER ASSEMBLIES (Speaker 84265-1)	
31110	Cone—Reproducer cone and voice coil (L9)	1.60
5039	Plug—4-prong male plug for reproducer	.30
31109	Reproducer complete	4.25
31111	Transformer—Output transformer (T2)	1.45
	MISCELLANEOUS ASSEMBLIES	
30901	Crystal—Station selector dial crystal	.45
6113	Foot—Felt foot for cabinet	.04
13085	Hinge—Cabinet lid hinge	.22
30863	Knob—Station selector, volume control or radio-record switch knob	.15
31053	Mounting—Motor mounting screw assembly complete	.30
31054	Mounting—Pickup arm mounting nuts, washer and rubber spacer	.15
30870	Plug—2-contact male plug for motor leads	.35
31048	Plug—2-contact male plug for output cable	.15
31079	Screw—Chassis mounting screw and washer	.20
30900	Spring—Retaining spring for knob Stock No. 30863	.05
31164	Support—Cabinet lid support	.45

ALL PRICES ARE SUBJECT TO CHANGE OR WITHDRAWAL WITHOUT NOTICE.

RCA MFG. CO., INC.

MODELS U119, U122E, U124
Schematic, Specs.

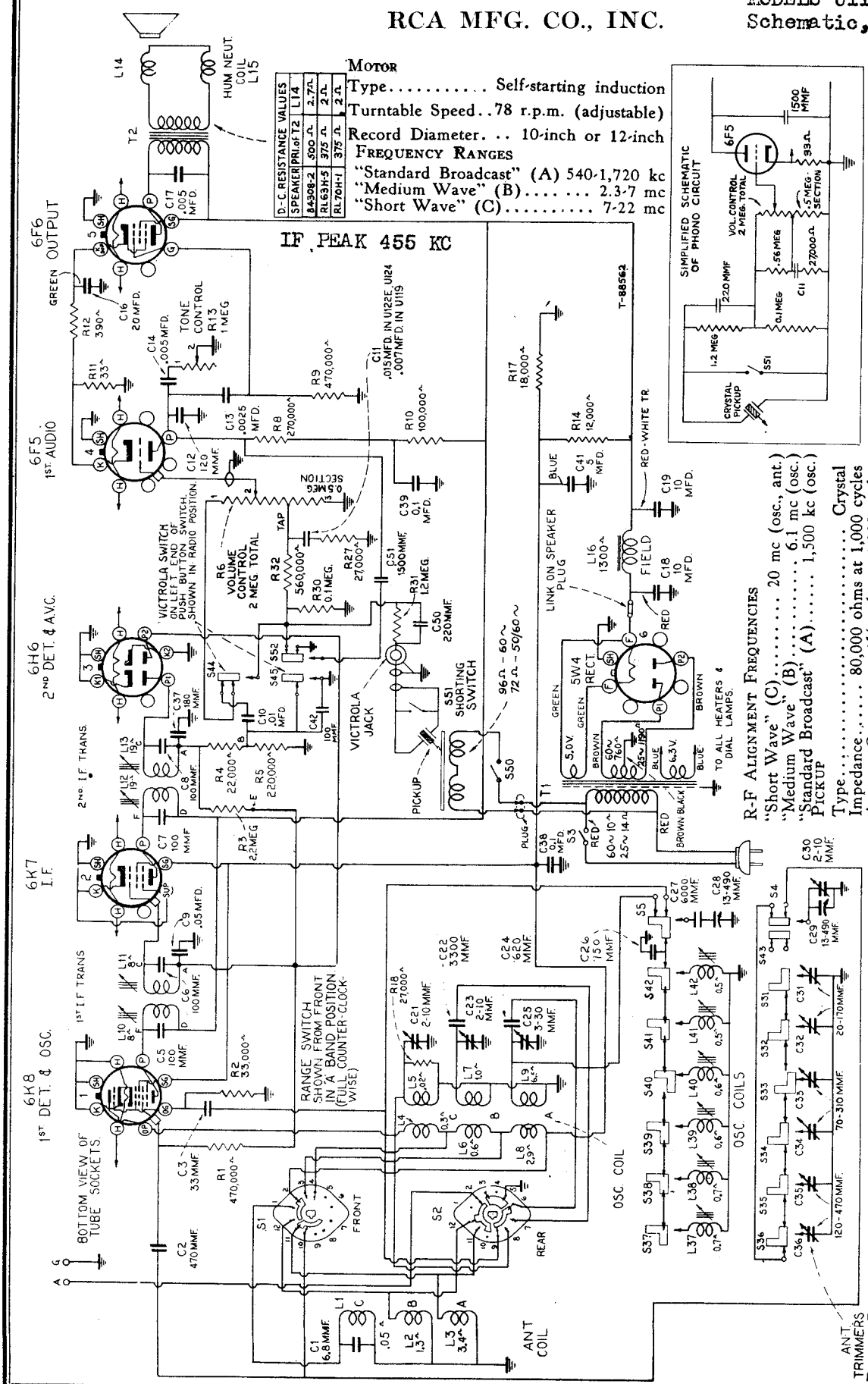

Motor
Type..... Self-starting induction
Turntable Speed..78 r.p.m. (adjustable)
Record Diameter. .. 10-inch or 12-inch

Frequency Ranges
"Standard Broadcast" (A) 540-1,720 kc
"Medium Wave" (B)..... 2.3-7 mc
"Short Wave" (C)..... 7-22 mc

D-C RESISTANCE VALUES		
SPEAKER	PRI. of T2	L14
84308-2	300 Ω	2.7Ω
RL63H-5	375 Ω	2Ω
RL70H-1	375 Ω	2Ω

R-F Alignment Frequencies
"Short Wave" (C)..... 20 mc (osc., ant.)
"Medium Wave" (B)..... 6.1 mc (osc.)
"Standard Broadcast" (A)..... 1,500 kc (osc.)

Pickup
Type..... Crystal
Impedance..... 80,000 ohms at 1,000 cycles
Average Output.... 1½ volts at 1,000 cycles across 250,000 ohm load

Pilot Lamps (2)..... Mazda 47, 6.3 volts, 15 amp.

Power Supply Rating	Radio Only	Total
A-6.....	105-125 volts, 60 cycles, 80 watts	105 watts
A.....	105-125 volts, 50-60 cycles, 80 watts	105 watts
B-2.....	105-125 volts, 25 cycles, 80 watts	105 watts
C-6.	105-130/140-160/195-250 volts, 60 cycles, 80 watts	105 watts
C...	105-130/140-160/195-250 volts, 50-60 cycles, 80 watts	105 watts

Loudspeaker	U-119	U-122E, U-124
Type.....	84308-2	Electrodynamic
Voice-coil Impedance	RL-63H-5 3 ohms RL-70H-1 2.25 ohms	.... at 400 cycles
Power Output		
Undistorted.....	2.0 watts	2.5 watts
Maximum.....	4.0 watts	4.5 watts

©John F. Rider, Publisher

MODELS U119,U122E,U124 Voltage,Chassis Wiring Transformers,Lead Dress

RCA MFG. CO., INC.

***NOTE:** Values with star (*) are operating voltages in circuits with high series resistance. The actual measured voltages will be lower, depending on the voltmeter loading.

Measurements made to chassis unless otherwise indicated, with set tuned to quiet point and volume control at minimum. Values should hold within ±20% with 117-volt a-c supply.

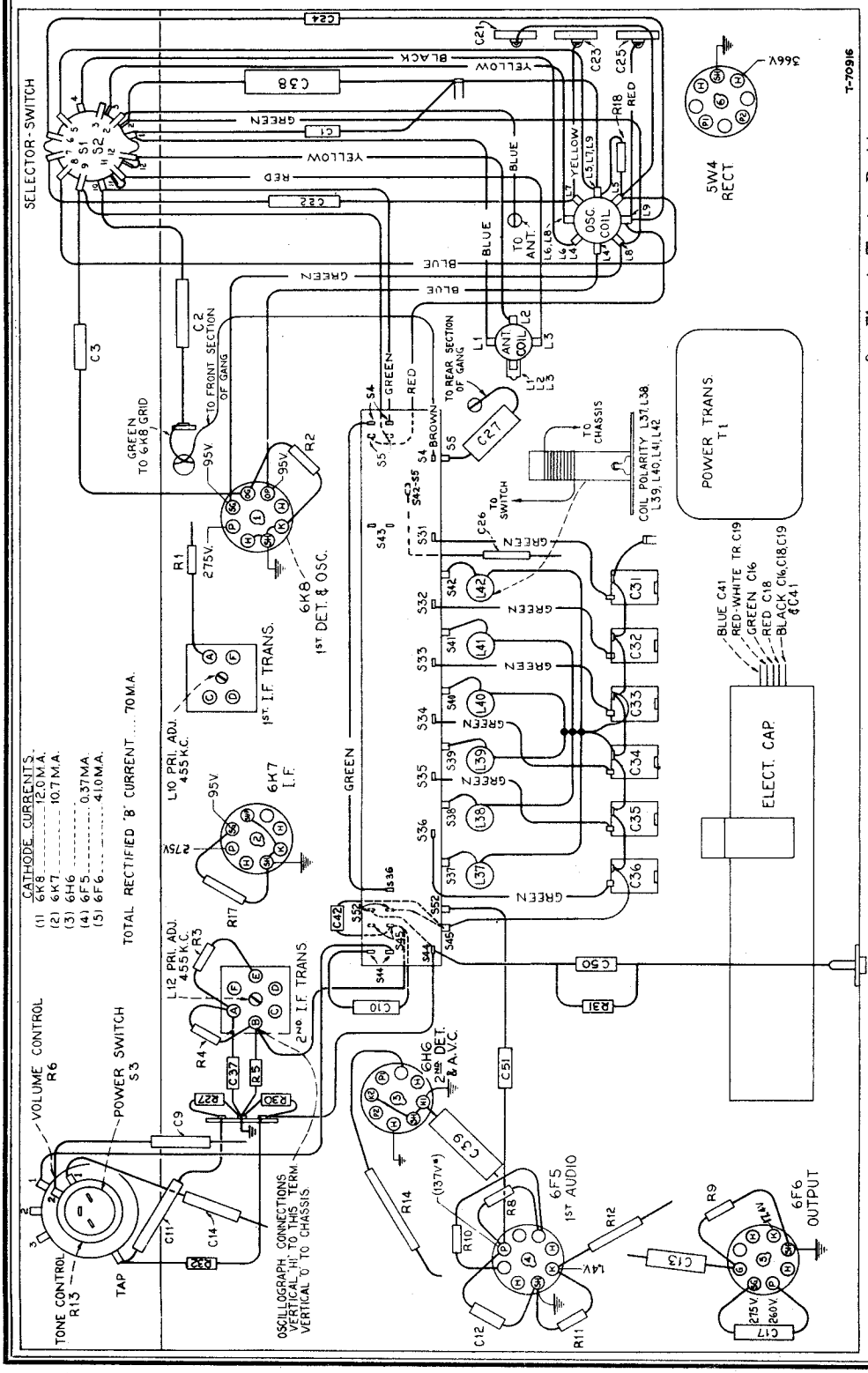

Six Electric Tuning Positions..... 550-1,500 kc
2 stations between approximately 550- 950 kc (Buttons 1 and 2)
2 stations between approximately 680-1,180 kc (Buttons 3 and 4)
2 stations between approximately 890-1,500 kc (Buttons 5 and 6)

Precautionary Lead Dress.—

1. Dress power-switch leads against left apron to prevent hum pickup.
2. Dress R1 away from front of chassis.
3. Leads across back of chassis should be dressed under electrolytic to prevent approaching Victrola jack.
4. Dress lead from L5 to range switch away from other leads.
5. Dress leads away from antenna coil.
6. Dress other parts and leads away from R14, as it becomes heated.

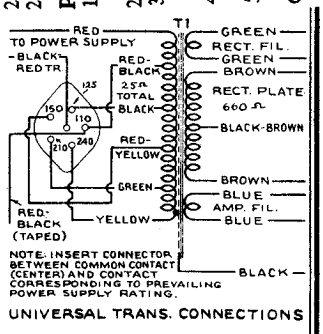

Above — Universal Power Transformer Connections. (110-volt supply for the Victrola motor is obtained by connecting the motor to the red and the red-black leads.)

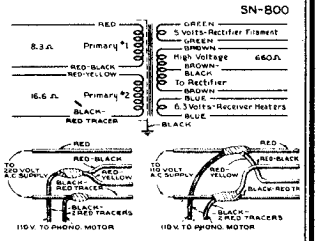

Above—Replacement Universal Power Transformer. (Stock No. 31446.)

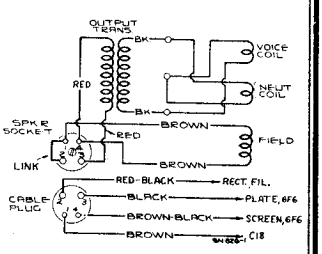

Above — Connections and Colors of Loudspeaker and Cable.

©John F. Rider, Publisher

RCA MFG. CO., INC.

MODELS U119,U122E,U124
Tuner Data,Phono.Data

ADJUSTMENTS FOR ELECTRIC TUNING

These models have eight push buttons. The left-hand button is a Victrola switch. The right-hand button connects the gang condenser for manual tuning. The other six buttons are for electric tuning of six different stations in the standard-broadcast range. The station buttons connect to separate magnetite-core oscillator coils and separate antenna trimmers which must be adjusted for the desired stations. Use an insulated screwdriver or alignment tool such as RCA Stock No. 31031. Allow at least five minutes warm-up period before making adjustments.

Use one or two feet of wire as an antenna to ensure sharp peaking.

The procedure is as follows:

1. Make a list of the desired six stations, arranged in order from low to high frequencies.
2. Push in the dial-tuning button, and manually tune in the first station on the list.
3. Push in station button No. 1 (second from left) and adjust No. 1 oscillator core (L37) to receive this station. Screw the core all the way in, to lowest frequency, and then unscrew slowly until station is received.
4. Adjust No. 1 antenna trimmer (C36) for maximum output on this station.

Clockwise adjustment of cores and trimmers tunes the circuits to lower frequencies.

5. Adjust for each of the remaining five stations in the same manner.
6. Make a final careful adjustment of the oscillator cores and antenna trimmers.

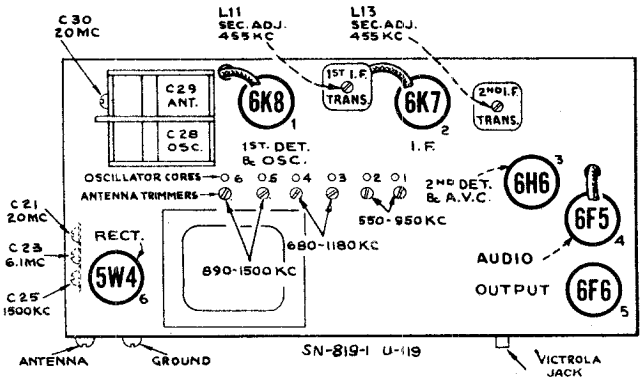

Tube and Trimmer Locations

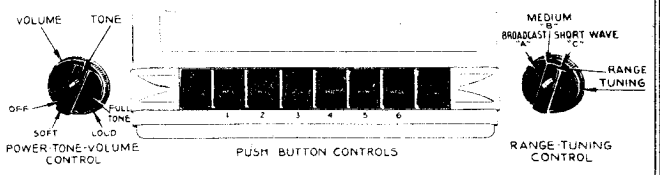

Location of Controls

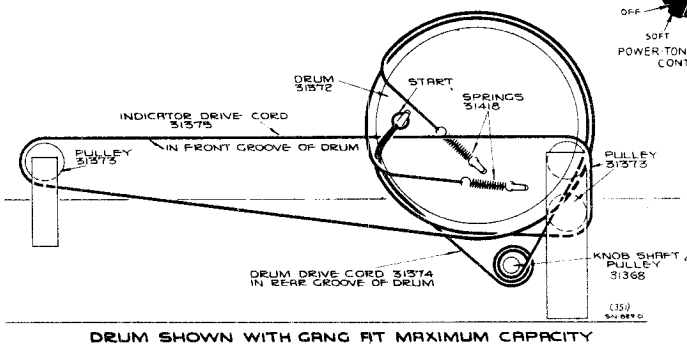

Arrangement of Drive Cords for Tuning Condenser and Dial Indicator

The left-hand push-button is a Victrola switch. The right-hand push-button is for dial tuning.

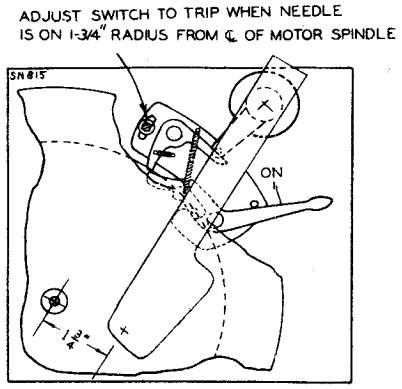

Adjustment of Automatic Switch

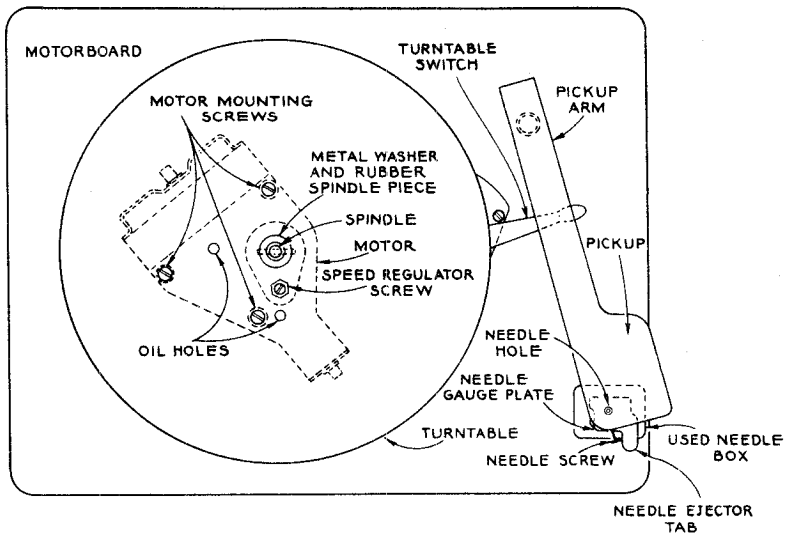

Top View of Motor Board

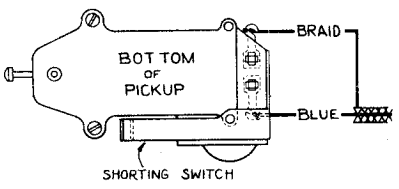

Pickup Connections

©John F. Rider, Publisher

©John F. Rider, Publisher

Cathode-Ray Alignment is the preferable method. Connections for the oscillograph are shown in the chassis drawing.

Output Meter Alignment.—If this method is used, connect the meter across the voice coil, and turn the receiver volume control to maximum.

Test-Oscillator.—For all alignment operations, connect the low side of the test-oscillator to the receiver chassis, and keep the output as low as possible to avoid a-v-c action.

Calibration Scale on Indicator-Drive-Cord drum. — The tuning dial if fastened in the cabinet and cannot be used for reference during alignment; therefore, a calibration scale is attached to the rear of the drum which is mounted on the front shaft of the gang condenser. The setting of the gang condenser is read on this scale, which is calibrated in degrees. The correct setting of the gang in degrees, for each alignment frequency, is given in the alignment table.

As the first step in r-f alignment, check the position of the drum. The 180° mark on the drum scale must be vertical, and directly over the center of the gang condenser shaft when the plates are fully meshed. The distance from the front of the chassis to the drum must not exceed ⅜ inch. The drum is held to the shaft by means of two set screws, which must be tightened securely when the drum is in the correct position.

Pointer for Calibration Scale.—Improvise a pointer for the calibration scale by fastening a piece of wire to the gang-condenser frame, and bend the wire so that it points to the "180°" mark on the calibration scale when the plates are fully meshed.

Dial-Indicator Adjustment.—After fastening the chassis in the cabinet, attach the dial indicator to the drive cable with indicator at the 530 kc mark, and gang condenser fully meshed. The indicator has a spring clip for attachment to the cable.

After completion of alignment, seal the i-f core-adjusting screws with household cement.

For additional details, refer to booklet "RCA Victor Receiver Alignment."

Steps	Connect the high side of test-osc. to—	Tune test-osc. to—	Turn radio dial to—	Adjust the following for max. peak output
1	6K7 I-F grid cap, in series with .01 mfd.	455 kc	"A" band, Quiet Point between 550-750 kc	L12 and L13 (2nd I-F Trans.)
2	6K8 det. grid cap, in series with .01 mfd.	455 kc		L10 and L11 (1st I-F Trans.)
3	Antenna Terminal, in series with 400 ohms	20 mc	20 mc (23°) "C" band	C21* (osc.) C30** (ant.)
4	Antenna Terminal, in series with 400 ohms	6.1 mc	6.1 mc (31°) "B" band	C23 (osc.)†
5	Antenna Terminal, in series with 200 mmf.	1,500 kc	1,500 kc (28½°) "A" band	C25 (osc.)
6	Follow "Adjustments for Electric Tuning"			

* Use **minimum** capacity peak if two peaks can be obtained.

** Rock gang slightly and use **maximum** capacity peak if two peaks can be obtained with C30. Check to determine that C21 has been adjusted to the correct peak by tuning to approximately 28° (19.09 mc), where a weaker signal should be received.

† Use **minimum** capacity peak if two peaks can be obtained. Check to determine that C23 has been adjusted to the correct peak by turning to approximately 49° (5.19 mc), at which point a weaker signal should be received.

Note: Oscillator tracks 455 kc above signal on all bands.

Victrola Mechanism

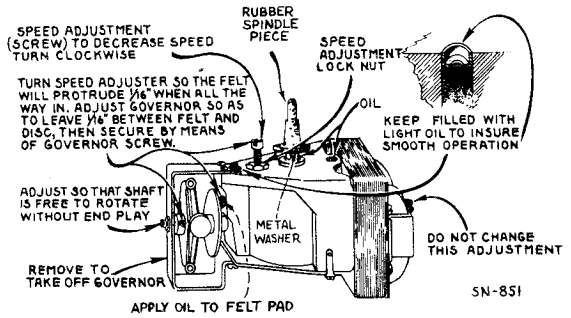

Motor Lubrication and Adjustments

The crystal pickup unit is thoroughly sealed in a metal casing as protection against extreme changes of climate. If failure occurs due to a defective crystal unit, no attempt should be made to repair the unit, but a new replacement crystal unit should be installed.

The turntable drive is a self-starting, variable-speed, governor-type induction motor. The motor speed-adjustment screw is located under the turntable, which must be removed for speed adjustment. The motor speed should be 78 r.p.m., and may be checked by placing a piece of paper between a record and the turntable, with the paper protruding beyond the edge of the record, and counting the number of revolutions of the turntable per minute while playing a record.

The motor spindle is tapered, and a conical rubber piece fits snugly on the spindle. The hole in the turntable bushing is tapered to fit the rubber. This provides an excellent self-centering floating mounting.

Lubrication and adjustments are described in the accompanying illustrations. Note that the switch lever should be adjusted so that the lever will snap to the "off" position when the pickup needle is 1¾ inches from the center-line of the spindle.

Operation.—*To start* turn on the radio power switch, push in the Victrola push button (left-end button) and push the turntable switch lever toward the base of the pickup arm. *To stop* move the pickup arm toward the spindle, in order to actuate the turntable switch, before returning the arm to the arm rest. Records with the standard eccentric or spiral stopping groove will automatically throw the turntable switch at the end of a record.

A metal washer is placed on the spindle under the rubber piece. The washer has ears on the under side which fit over a pin that projects through the spindle.

ALL PRICES ARE SUBJECT TO CHANGE OR WITHDRAWAL WITHOUT NOTICE.

STOCK No.	DESCRIPTION	Unit List Price
	RECEIVER ASSEMBLIES	
14517	Board—Antenna ground terminal board	.25
31400	Capacitor—Triple adjustable trimmer two sections 2-10 mmfd., one section 3-30 mmfd. (C21, C23, C25)	.50
14079	Capacitor—6.8 mmfd. (C1)	.35
31387	Capacitor—Antenna coil trimmer capacitor bank 20-470 mmfd. (C31, C32, C33, C34, C35, C36)	1.30
12948	Capacitor—33 mmfd. (C3)	.35
12720	Capacitor—200 mmfd. (C42)	.35
30904	Capacitor—100 mmfd. (C5, C6, C7, C8)	.25
12724	Capacitor—120 mmfd. (C12)	.35
13003	Capacitor—180 mmfd. (C37)	.35
12694	Capacitor—220 mmfd. (C60)	.35
30433	Capacitor—470 mmfd. (C9)	.35
31381	Capacitor—820 mmfd. (C24)	.45
31435	Capacitor—750 mmfd. (C26)	.40
13762	Capacitor—1,500 mmfd. (C51)	.50
31403	Capacitor—3,300 mmfd. (C22)	.60
31405	Capacitor—6,000 mmfd. (C27)	.75
5107	Capacitor—.0025 mfd. (C13)	.20
4836	Capacitor—.006 mfd. (C14, C17)	.25
6148	Capacitor—.007 mfd. (C11) (Model U-119 only)	.20
14393	Capacitor—.01 mfd. (C10)	.30
11315	Capacitor—.015 mfd. (C11) (Models U-122E and U-124 only)	.20
4886	Capacitor—.05 mfd. (C9)	.20
4839	Capacitor—0.1 mfd. (C38, C39)	.30
31371	Capacitor—Comprising two 10 mfd., one 20 mfd., and one 5 mfd. sections (C16, C18, C19, C41)	2.25
31382	Clip—Oscillator coil and core mounting clip	.04
31402	Coil—Antenna coil—A, B, and C bands (L1, L2, L3)	1.15
31401	Coil—Oscillator coil—A, B, and C bands (L4, L5, L6, L7, L8, L9)	2.00
31383	Coil—Oscillator coil—A band (L41, L42)	.30
31384	Coil—Oscillator coil—A band (L39, L40)	.30
31385	Coil—Oscillator coil—A band (L37, L38)	.30
31369	Condenser—2-gang variable tuning condenser (C28, C29, C30)	2.65
31366	Control—Volume control, tone control, and on-off switch (R6, R13, S3)	3.00
31375	Cord—Indicator pointer drive cord	.30
31374	Cord—Variable condenser drum drive cord	.15
30905	Core—Adjustable core and stud for i-f transformer	.35
31386	Core—Adjustable core and stud for oscillator coil Stock Nos. 31383, 31384, and 31385	.15
31372	Drum—Variable condenser drive cord drum and calibrator dial	.65
11891	Lamp—Dial lamp	.17
30868	Plug—2-contact female plug for motor cable	.35
5040	Plug—4-contact female plug for speaker cable	.30
31373	Pulley—Drive cord pulley	.08
14871	Resistor—53 ohms, ½ watt (R11)	.20
31388	Resistor—390 ohms, 1 watt (R12)	.22
31389	Resistor—12,000 ohms, wire wound, 5 watts (R14)	.50
30151	Resistor—18,000 ohms, 1 watt (R17)	.22
	MOTOR BOARD ASSEMBLIES	
9848	Cup—Used needle cup and lid complete	.75
31464	Damper—One rubber spindle cap and one metal damper plate	.30
31465	Mounting—Pickup arm base mounting—one rubber washer, one lockwasher, one nut	.10
30870	Plug—2-contact male plug for motor and switch leads	.35
31158	Screw—Motor mounting screws, washers, and spacers, (sufficient for one motor)	.25
31155	Spring—Used needle cup lid spring	.04
30100	Spring—Auto. switch springs—one long spring and one short spring	.08
31466	Switch—Automatic motor switch and switch lever	3.60
31457	Switch—Switch only—for auto. switch (S50)	.35
31463	Turntable	1.50
	PICKUP AND ARM ASSEMBLIES	
31156	Crystal—Pickup crystal cartridge and needle screw and shorting switch (S51)	4.25
31468	Pickup and Arm complete	7.50
31160	Screw—Needle screw	.12
31469	Shaft—Pickup pivot arm and shaft assembly complete with base	.95
	SPEAKER ASSEMBLIES Model U-119 (Speaker No. 84308-2)	
31762	Cone—Speaker cone and voice coil (L14)	1.75
31761	Speaker Complete	5.15
31444	Transformer—Output transformer (T2)	1.95
	SPEAKER ASSEMBLIES Model U-122E (Speaker No. RL63H-5)	
14356	Board—3-contact speaker terminal board	.15
13866	Cap—Cone center dust cap	.25
12012	Coil—Field coil (L16)	2.90
11469	Coil—Hum neutralizing coil (L15)	.30
31310	Cone—Speaker cone and voice coil (L14)	1.75
31302	Plug—4-contact male plug for speaker	.25
14358	Screw—Screw, washer, and lockwasher to hold core in yoke	.04
31453	Speaker Complete	10.25
14355	Transformer—Output transformer (T2)	2.00
14357	Washer—Spring washer to hold field coil	.06
	SPEAKER ASSEMBLIES Model U-124 (Speaker No. RL70H-1)	
13866	Cap—Dust cap for cone center	.25
12012	Coil—Field coil (L16)	2.90
11469	Coil—Hum neutralizing coil (L15)	.30
31275	Cone—Speaker cone and voice coil (L14)	1.75
31302	Plug—4-contact male plug	.25
14284	Resistor—22,000 ohms, 1/10 watt (R4)	.15
12738	Resistor—27,000 ohms, ½ watt (R7, R18)	.20
12454	Resistor—33,000 ohms, ½ watt (R2)	.20
14560	Resistor—100,000 ohms, ½ watt (R10, R30)	.20
12264	Resistor—220,000 ohms, ½ watt (R5)	.20
12199	Resistor—270,000 ohms, ½ watt (R8)	.20
12285	Resistor—470,000 ohms, ½ watt (R1, R9)	.20
12486	Resistor—560,000 ohms, ½ watt (R32)	.20
30208	Resistor—1.2 meg., ½ watt (R31)	.20
12679	Resistor—2.2 meg., ½ watt (R3)	.20
14343	Retainer—Retaining spring for station selector knob shaft	.03
14887	Retainer—Drive cord pulley retainer	.01
4669	Screw—No. 8-32 square head set screw for drum Stock No. 31372	.03
31368	Shaft—Station selector knob shaft and pulley	.30
31418	Spring—Indicator, or drum drive cord tension spring	.05
31364	Socket—Dial lamp socket	.20
14278	Socket—Pickup input socket	.25
31251	Socket—Tube socket	.25
31398	Switch—Range switch (S1, S2)	1.25
31370	Switch—Station selector push-button switch (S4, S5, S31, S32, S33, S34, S35, S36, S37, S38, S39, S40, S41, S42, S44, S45, S52)	3.85
30957	Transformer—First i-f transformer (L10, L11, C5, C6)	1.90
30903	Transformer—Second i-f transformer (L12, L13, C7, C8)	1.80
31445	Transformer—Power transformer 100-120 volts, 25-60 cycle (T1)	7.80
31380	Transformer—Power transformer 100-120 volts, 50-60 cycle (T1)	6.35
31446	Transformer—Power transformer 100-120 volts, and 200-240 volts, 50-60 cycle (T1)	8.05
	MOTOR ASSEMBLIES	
31617	Bracket—Motor governor end bearing bracket—less bearing screw, and nut	.30
31618	Field—Motor field coils and laminations—105-125 volts, 60 cycle	5.50
31619	Field—Motor field coils and laminations—105-125 volts, 50-60 cycle	7.80
31628	Field—Motor field coils and laminations—105-125 volts, 25 cycle	9.30
31623	Governor—Motor governor complete—60 cycle	2.80
11703	Governor—Motor governor complete—50-60 cycle	3.05
31624	Governor—Motor governor complete—25 cycle	3.05
31724	Motor—105-125 volts, 60 cycle (M1)	22.95
31462	Motor—105-125 volts, 50-60 cycle (M1)	20.20
31461	Motor—105-125 volts, 60 cycle (M1)	17.35
31616	Screw—Motor rotor bearing screw and nut	.25
31620	Screw—Motor speed regulator screw and nut	.20
31621	Shaft—Motor turntable spindle shaft and gear—60 cycle or 50-60 cycle	1.90
31773	Shaft—Motor turntable spindle shaft and gear—25 cycle	2.95
31622	Washer—Motor spindle shaft thrust bearing washers (1 metal, 1 felt)	.10
31592	Speaker—Speaker complete	9.35
14358	Screw—Screw, washer, and lockwasher to hold core in yoke	.04
14355	Transformer—Output transformer (T2)	2.00
14357	Washer—Spring washer to hold field coil	.06
	MISCELLANEOUS ASSEMBLIES	
31397	Button—Station selector push-button	.15
31456	Cover—8 protective covers for push-button markers	.08
31591	Dial—Station selector dial scale—Model U-124 only	.75
31406	Dial—Station selector dial scale—Models U-119 and U-122E only	.90
31395	Escutcheon—Tuning dial escutcheon only less push-buttons and dial scale	1.15
13085	Hinge—Cabinet lid hinge—Model U-119 only	.22
30698	Hinge—Cabinet lid hinge—Model U-124 only	.95
31103	Hinge—Cabinet lid hinge—Model U-122E only	.50
31392	Indicator—Indicator pointer, carriage, and clip	.30
31355	Knob—Range switch knob	.12
14359	Knob—Station selector knob	.20
31391	Knob—Tone control knob	.15
30773	Knob—Volume control knob	.15
31458	Marker—"Dial Tuning" marker for push-button—Models U-119 and U-122E only	.01
31460	Marker—"Dial Tuning" marker for push-button—Model U-124 only	.04
31457	Marker—"Record Player" marker for push-button—Models U-119 and U-122E only	.01
31459	Marker—"Record Player" marker for push-button—Model U-124 only	.04
31589	Marker—Station call letter markers—Models U-119 and U-122E	.35
31590	Marker—Station call letter markers—Model U-124	.40
31393	Screen—Dial color screen	.40
11210	Screw—Chassis mounting screws, washers, and lockwashers—Model U-124 only	.05
31390	Screw—Chassis mounting screws, washers, and lockwashers—Model U-119 only	.10
31471	Screw—Chassis mounting screws, washers, and lockwashers—Model U-122E only	.15
31470	Springs—Motorboard suspension stop spring, bottom spring, screw, and lockwasher (4 req'd.)	.10
4982	Spring—Retaining spring for knob Stock No. 14359	.05
14270	Spring—Retaining spring for knob Stock Nos. 30773 and 31355	.05
30330	Spring—Retaining spring for knob Stock No. 31391	.03
31164	Support—Cabinet lid support—Model U-119 only	.45
30946	Support—Cabinet lid support—Model U-122E only	.80
11831	Support—Cabinet lid support—Model U-124 only	1.85

RCA MFG. CO., INC.

MODELS 810K, 810K1, 810T
Schematic, Notes

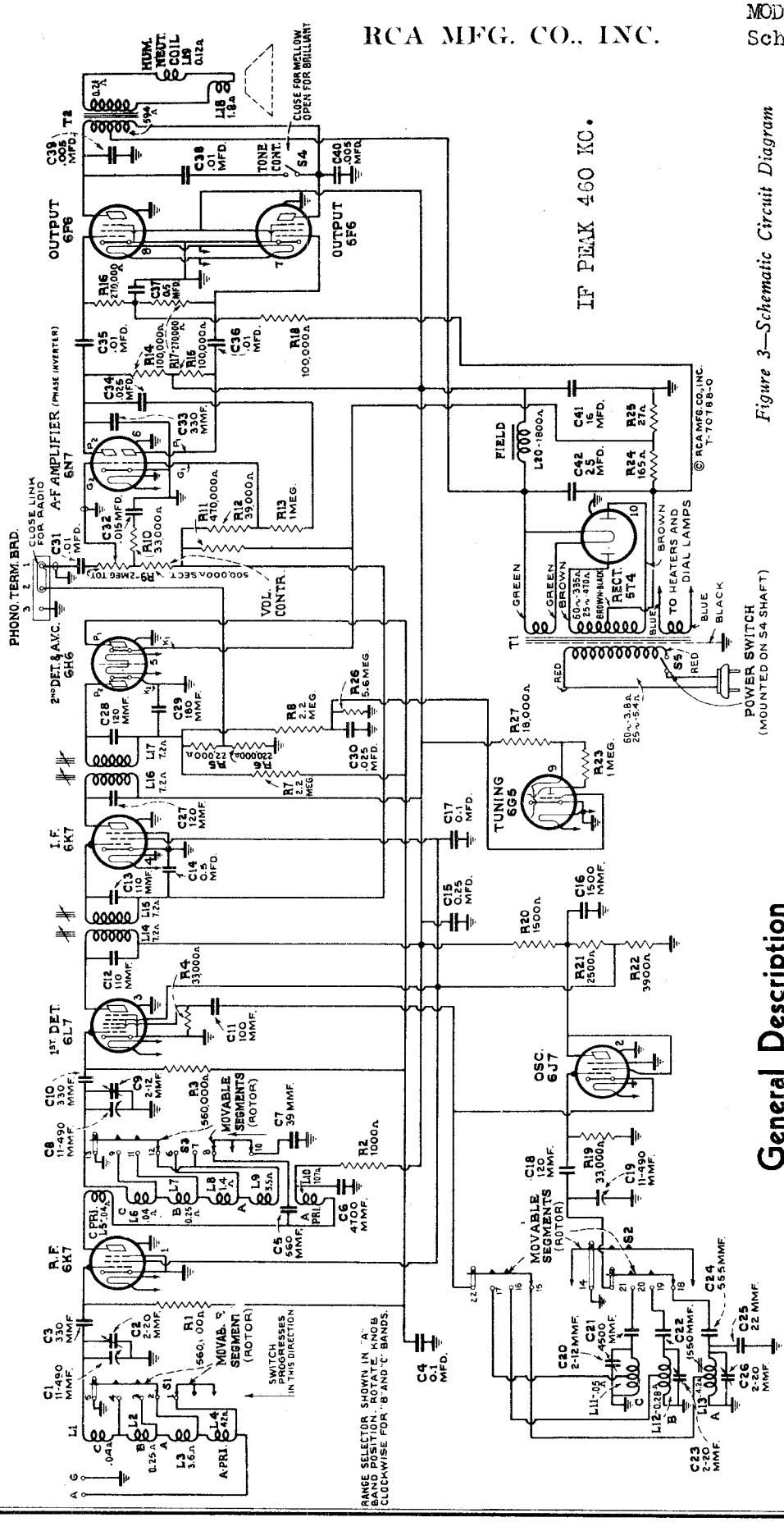

Figure 3—Schematic Circuit Diagram

General Description

These receivers employ a ten-tube, three-band, "Magic Brain," superheterodyne circuit, the arrangement of which is shown by the Schematic Circuit Diagram. Models 810K and 810K1 are console models, each employing a 12-inch electrodynamic loudspeaker. Model 810T is a table model employing an 8-inch electrodynamic loudspeaker. Features of design include an r-f amplifier stage, "cumulative-wound" antenna and r-f transformers for high signal-to-noise ratio; magnetite-core, i-f transformers and low-frequency oscillator tracking; automatic volume control; phonograph terminal board; "Magic Eye" tuning tube; plunger-type, air-dielectric trimming capacitors; aural-compensated, audio-volume control; "Mellow-Brilliant" tone control; audio phase-inverter voltage amplifier; push-pull, power-output stage; improved dust-proof electrodynamic loudspeaker; and a new sunburst dial with short-wave stations listed by name and illuminated band and tone indicators. In addition, Model 810K1 has a cabinet incorporating the "Sonic-Arc" Magic Voice.

Trademarks "Radiotron," "Magic Eye," "Magic Brain," "Magic Voice" Reg. U. S. Pat. Off. by RCA Mfg. Co., Inc.

Copyright, 1937, RCA Manufacturing Co., Inc.

©John F. Rider, Publisher

MODELS 810K, 810K1, 810T
Chassis Wiring, Coils

RCA MFG. CO., INC.

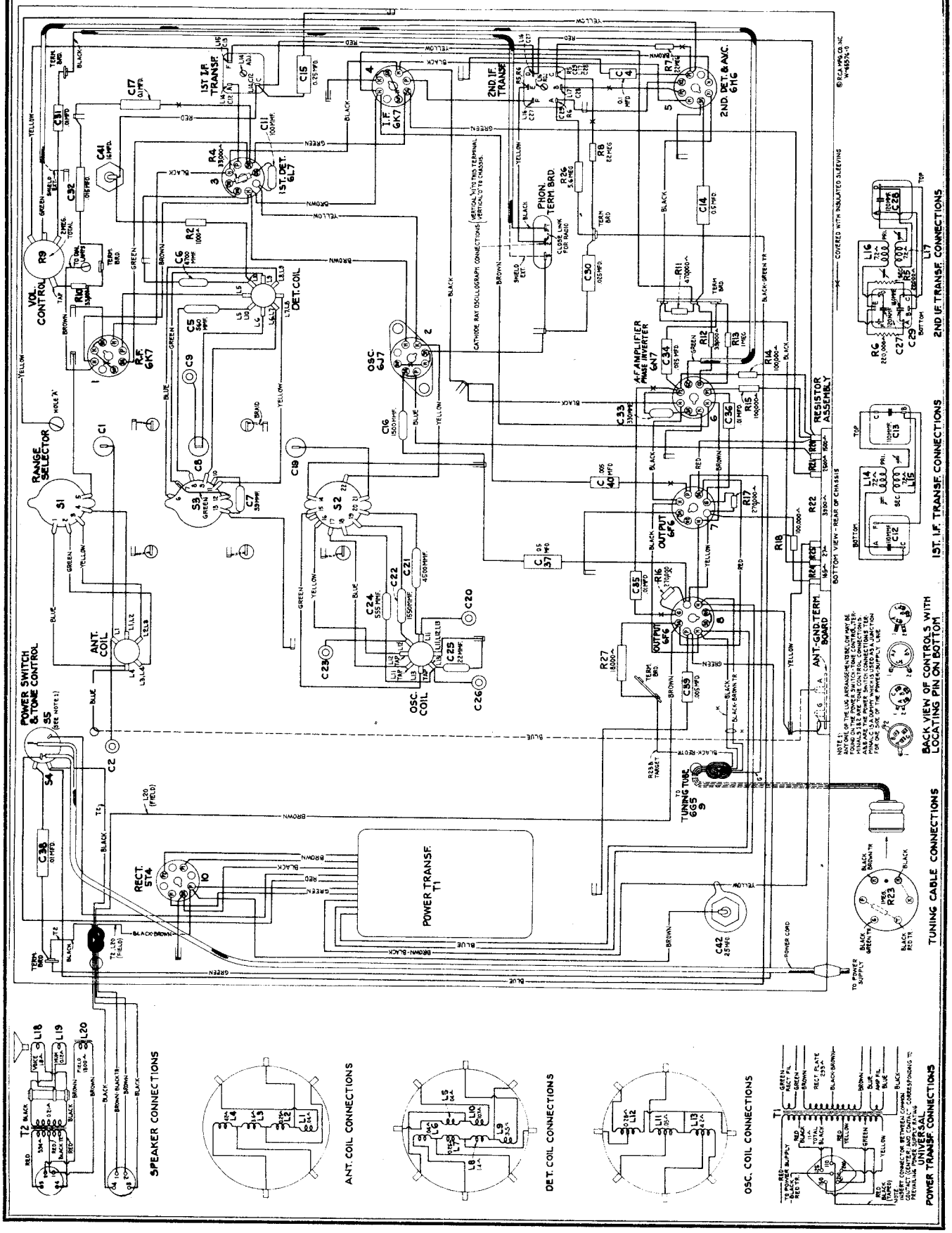

©John F. Rider, Publisher

RCA MFG. CO., INC.

MODELS 810K,810K1,810T
Specifications,Voltage
Trimmers

Electrical Specifications

FREQUENCY RANGES

"Broadcast" (A)	530-1,720 kc
"Medium Wave" (B)	2,100-6,800 kc
"Short Wave" (C)	6,800-22,000 kc

R-F ALIGNMENT FREQUENCIES

"Short Wave" (C)	20,000 kc (osc., det., ant.)
"Medium Wave" (B)	6,000 kc (osc.)
"Broadcast" (A)	600 kc (osc.), 1,500 kc (osc.)
Intermediate Frequency	460 kc

RADIOTRON COMPLEMENT

(1) RCA-6K7	R-F Amplifier
(2) RCA-6J7	Heterodyne Oscillator
(3) RCA-6L7	First Detector
(4) RCA-6K7	Intermediate Amplifier
(5) RCA-6H6	Second Detector and A.V.C.
(6) RCA-6N7	Phase Inverter A-F Amplifier
(7) RCA-6F6	Power Output
(8) RCA-6F6	Power Output
(9) RCA-6G5	"Magic Eye" Tuning Tube
(10) RCA-5T4	Full-Wave Rectifier
Pilot Lamps (4)	Mazda No. 46, 6.3 volts, 0.25 amp.

POWER SUPPLY RATINGS

Rating A	105-125 volts, 50-60 cycles, 135 watts
Rating B	105-125 volts, 25-60 cycles, 135 watts
Rating C	100-130/140-160/195-250 volts, 40-60 cycles, 135 watts

POWER OUTPUT

Undistorted	10 watts
Maximum	12.5 watts

LOUDSPEAKER

Type	Electrodynamic
Impedance (v.c.)	2.2 ohms at 400 cycles

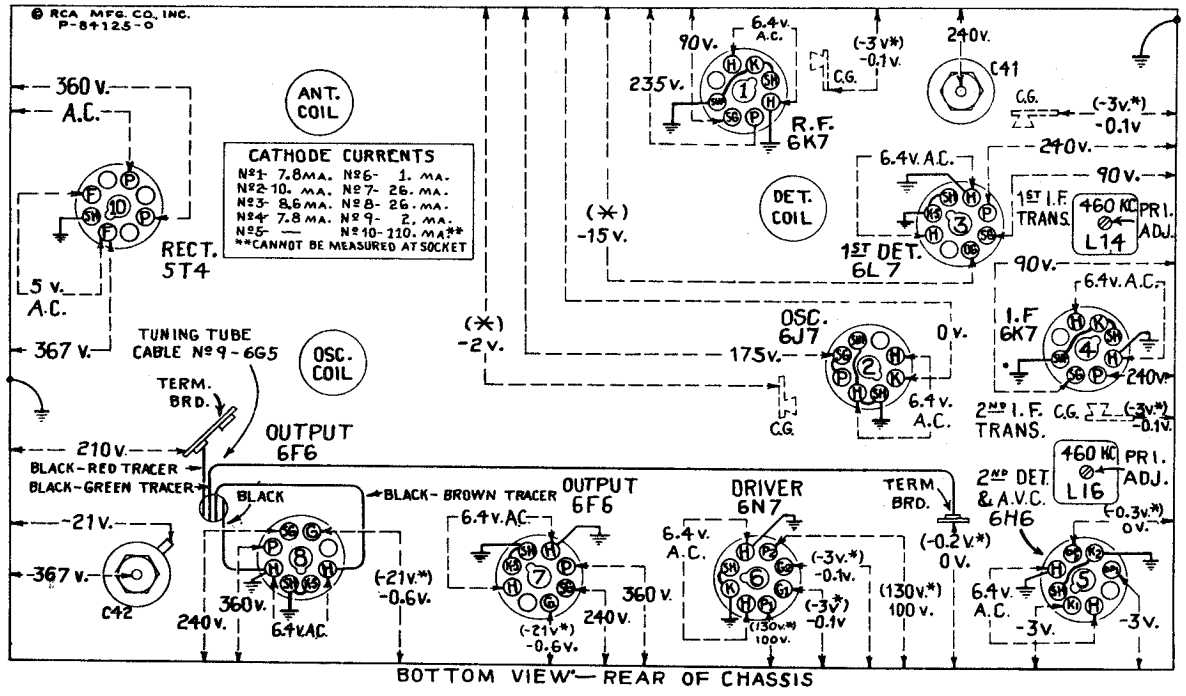

Figure 2—Radiotron Socket Voltages, Coil, and Trimmer Locations

Measured at 115 volts, 60-cycle supply—Tuned to approximately 1,000 kc ("Standard Broadcast")—No signal being received—Volume control minimum

Note: Two voltage values are shown for some readings. The value shown in parentheses with asterisk (*) indicates operating conditions without voltmeter loading. The other value (generally lower) is the actual measured voltage and differs from the value shown in parentheses because of the additional loading of the voltmeter through the high series circuit resistance.

Voltage values as specified should hold within ±20% when the receiver is normally operative at its rated line voltage. To duplicate the conditions under which the voltages were measured requires a 1,000-ohm-per-volt d-c meter, having ranges of 10, 50, 250, and 500 volts. Use the nearest range above the specified measured voltage. A-c voltages were measured with a corresponding a-c meter.

©John F. Rider, Publisher

MODELS 810K,810K1,810T
Alignment,Socket
Phono. Notes

RCA MFG. CO., INC.

Service Data

The various diagrams of this booklet contain such information as will be needed to isolate causes for defective operation if such develops. The ratings of the resistors, capacitors, coils, etc., are indicated adjacent to the symbols signifying these parts on the diagrams. Identification titles such as R1, L1, C1, etc., provide reference between the illustrations and Replacement Parts List. The coils, transformer windings, and reactors are rated in terms of d-c resistance to permit continuity checks.

Loudspeaker.—Centering of the loudspeaker is made in the usual manner with three narrow paper feelers after first removing the front dust cover. This may be removed by softening its cement with a light application of acetone, using care not to allow the acetone to flow into the air gap. The dust cover should be cemented back in place with ambroid upon completion of adjustment.

Phonograph Attachment.—A terminal board is provided for connecting a phonograph into the audio amplifying circuit. RCA Victor Models R-93, R-93-A, R-93-2, or R-94 Record Players should be connected as follows: Remove link between terminals 1 and 2 on terminal board. Connect green wire in Radio-Record switch cable to terminal 1, yellow to terminal 2, and shield extension to terminal 3. Tape unused red and blue leads separately. Connect a 2-conductor twisted cable between the Record Player binding posts and the screw terminals on Radio-Record switch. If additional volume is desired, connect an RCA Stock No. 9632 transformer between the two conductor twisted cable and the screw-terminals on Radio-Record switch as follows: yellow and brown transformer leads and one side of twisted cable to ground screw-terminal on switch; black transformer lead to other side of twisted cable; and blue transformer lead to other screw-terminal on switch.

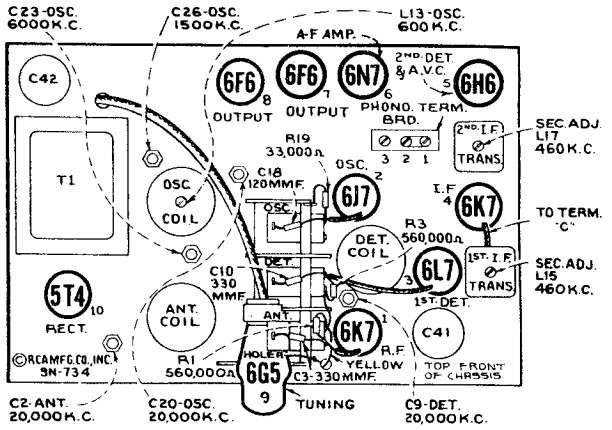

Figure 1—Radiotron, Coil, and Trimmer Locations

Alignment Procedure

Calibrate the tuning dial by adjusting main dial pointer to the low-frequency (end) calibration mark on dial with the gang tuning-condenser plates in full-mesh position; then adjust the small (vernier) pointer to "O." These are friction adjustments.

Perform alignment in proper order, tabulated below, starting with No. 1 and following all operations across, then No. 2, etc. Adjustment locations are shown on figures 1 and 2.

Cathode-ray alignment is highly preferable; the connections to the chassis are shown on figure 4. If an output indicator is used, connect it across the loudspeaker voice-coil and advance the receiver volume control to full-volume position.

Connect the "low" output terminal of the test oscillator to the receiver "G" (ground) terminal for all alignment operations. Regulate the output of the test oscillator so that minimum signal is applied to the receiver to obtain an observable output indication. This will avoid a-v-c action.

The term "Dummy antenna" means the device which must be connected between the "high" test-oscillator output and the point of connection to the receiver in order to obtain ideal alignment. "No signal, 550-750 kc" means that the receiver should be tuned to a point between 550 and 750 kc where no signal or interference is received from a station or local (heterodyne) oscillator.

Order of Alignment	Test Oscillator			Range Selector	Receiver Dial Setting	Circuit to Adjust	Adjustment Symbols	Adjust to Obtain
	Connection to Receiver	Dummy Antenna	Frequency Setting					
1	6K7 I-F Grid Cap	.001 Mfd.	460 kc	"A" Left	No Signal 550-750 kc	2nd I-F Trans.	L16 and L17	Max. (peak)
2	6L7 Det. Grid Cap	.001 Mfd.	460 kc	"A"	No Signal 550-750 kc	1st I-F Trans.	L14 and L15	Max. (peak)
3	Ant. Term.	300 Ohms	20,000 kc	"C" Right	20,000 kc	"C" Osc.	C20	Max. (peak) *
4	Ant. Term.	300 Ohms	20,000 kc	"C"	20,000 kc	"C" Det.	C9	Max. (peak) †
5	Ant. Term.	300 Ohms	20,000 kc	"C"	20,000 kc	"C" Ant.	C2	Max. (peak) ‡
6	Ant. Term.	300 Ohms	6,000 kc	"B" Center	6,000 kc	"B" Osc.	C23	Max. (peak) *
7	Ant. Term.	200 Mmfd.	600 kc	"A" Left	600 kc	"A" L-F Osc.	L13	Max. (peak)
8	Ant. Term.	200 Mmfd.	1,500 kc	"A"	1,500 kc	"A" H-F Osc.	C26	Max. (peak)
9	Ant. Term.	200 Mmfd.	600 kc	"A"	600 kc	"A" L-F Osc.	L13	Max. (peak)
10	Ant. Term.	200 Mmfd.	1,500 kc	"A"	1,500 kc	"A" H-F Osc.	C26	Max. (peak)

* Use minimum capacity peak if two peaks can be obtained.
† Use maximum capacity peak if two peaks can be obtained.
‡ After this adjustment, check for image signal by shifting receiver dial to 19,080 kc.

©John F. Rider, Publisher

RCA MFG. CO., INC.

MODELS 810K,810K1,810T
Lead Dress,Parts

Precautionary Lead Dress.—(1) Keep leads to a-c switch dressed away from antenna coil and trimmer C2. (2) Keep all filament leads twisted. (3) Keep yellow lead from term. E of 2nd i-f trans. to phono. term. board as short as possible. (4) Keep leads of C21 as short as possible. (5) Dress shielded lead from volume control to phono. term. board against side of chassis and away from 6L7 socket. (6) Yellow lead from 6J7 oscillator cathode to dummy terminal on 6L7 socket must be dressed away from chassis base and from brown filament lead. (7) All molded capacitors should be dressed so that flat side is perpendicular to chassis base. (8) Yellow lead from cathode of 6J7 socket to term. 22 of S2 must be dressed under spaghetti on 6J7 socket jumper and pulled tight away from chassis. The following bus leads should be kept as short as possible and, when necessary, replaced only with wire having same diameter as original: (9) Lead from L11-L12-L13 to ground lance; (10) Lead from term. 13 of S3 to ground lance; (11) Lead from term. 9 of S3 to L6-L7; (12) Lead from L6 to C8; (13) Lead from C9 to C8; (14) Lead from term. 5 of S1 to ground lance; (15) Lead from L1-L2 to term. 4 of S1; (16) Lead from L1 to C1; (17) Lead from term. 21 of S2 to C19. (18) Keep filament leads dressed away from grid prongs of 6N7. (19) Keep blue and green leads from plate prongs of output tubes twisted their entire length.

REPLACEMENT PARTS

Insist on genuine factory tested parts, which are readily identified and may be purchased from authorized dealers.

STOCK No.	DESCRIPTION
	RECEIVER ASSEMBLIES
12038	Band—Rubber band for tuning tube
14384	Belt—Variable condenser drive belt
14517	Board—Antenna and ground terminal board
12717	Board—Phonograph terminal board
14338	Bushing—Variable condenser mounting bushing assembly
14524	Cable—Band indicator cable approx. 6½ in. long
14523	Cable—Tone control indicator cable approx. 3 in. long
14394	Cable—Tuning tube cable and socket
11350	Cap—Grid contact cap
12607	Cap—First I.F. transformer shield top
12581	Cap—Second I.F. transformer shield top
12884	Capacitor—Adjustable trimmer (long) (C2, C23, C26)
12714	Capacitor—Adjustable trimmer (Medium) (C9, C20)
14021	Capacitor—22 Mmfd. (C25)
13545	Capacitor—39 Mmfd. (C7)
12720	Capacitor—100 Mmfd. (C11)
14262	Capacitor—110 Mmfd. (C12, C13)
12404	Capacitor—120 Mmfd. (C27, C28)
12724	Capacitor—120 Mmfd. (C18)
12406	Capacitor—180 Mmfd. (C29)
12952	Capacitor—330 Mmfd. (C3, C10, C33)
12727	Capacitor—555 Mmfd. (C24)
12537	Capacitor—560 Mmfd. (C5)
13762	Capacitor—1500 Mmfd. (C16)
12729	Capacitor—1550 Mmfd. (C22)
12728	Capacitor—4500 Mmfd. (C21)
12897	Capacitor—4700 Mmfd. (C6)
4838	Capacitor—.005 Mfd. (C39, C40)
13138	Capacitor—.01 Mfd. (C31, C35, C36)
4937	Capacitor—.01 Mfd. (C38)
11315	Capacitor—.015 Mfd. (C32)
4870	Capacitor—.025 Mfd (C30, C34)
4839	Capacitor—0.1 Mfd. (C4, C17)
12484	Capacitor—0.25 Mfd. (C15)
12741	Capacitor—0.5 Mfd. (C14, C37)
5212	Capacitor—16 Mfd. (C41)
14531	Capacitor—25 Mfd. (C42)
14372	Coil—Antenna coil and shield (L1, L2, L3, L4)
14516	Coil—Oscillator coil and shield (L11, L12, L13)
14414	Coil—R.F. coil and shield (L5, L6, L7, L8, L9, L10)
14513	Condenser—3 gang variable tuning condenser (C1, C8, C19)
5040	Connector—4 contact female connector for reproducer cable
12006	Core—Adjustable core and stud for transformer Stock No. 14376 and Stock No. 14283
12800	Core—Adjustable core and stud for coil Stock No. 14516
14518	Dial—Station selector dial scale complete with tuning tube escutcheon
14514	Drive—Variable condenser vernier drive pinion gear and shaft
14345	Drum—Variable condenser drive belt drum complete with set screws
14387	Escutcheon—Tuning tube escutcheon
11982	Fastener—Dial scale fastener
30085	Gear—Indicator drive gear and hub, and pointer stem and gear
14341	Idler—Station selector drive belt idler
14519	Indicator—Station selector indicator pointer
14520	Indicator—Vernier indicator pointer
5226	Lamp—Dial lamp
14028	Nut—Jamb nut for adjustable trimmer capacitor Stock No. 12714 and No. 12884
12471	Plate—6J7 Radiotron socket mounting plate and rubber cushions—less socket
14340	Pulley—Station selector drive belt pulley and knob shaft
14522	Reflector—Dial reflector and bracket complete with dial lamp bracket, tuning tube bracket and tone and band indicators
14720	Resistor—1000 Ohms, Carbon type, ½ watt (R2)
14078	Resistor—18,000 Ohms, Carbon type, 1 watt (R27)
14284	Resistor—22,000 Ohms, Carbon type, 1/10 watt (R5)
11300	Resistor—33,000 Ohms, Carbon type, 1/10 watt (R19)
13735	Resistor—33,000 Ohms, Carbon type, ½ watt (R4, R10)
11322	Resistor—39,000 Ohms, Carbon type, ½ watt (R12)
5145	Resistor—100,000 Ohms, Carbon type, ½ watt (R14), R15, R18)
11398	Resistor—220,000 Ohms, Carbon type, 1/10 watt (R6)
11453	Resistor—270,000 Ohms, Carbon type, 1/10 watt (R16, R17)
11172	Resistor—470,000 Ohms, Carbon type, ½ watt (R11)
11397	Resistor—560,000 Ohms, Carbon type, 1/10 watt (R1, R3)
12013	Resistor—1 Megohm, Carbon type, 1/10 watt (R23)
13730	Resistor—1 Megohm, Carbon type, ½ watt (R13)
11626	Resistor—2.2 Megohm, Carbon type, ½ watt (R7, R8)
11668	Resistor—5.6 Megohm, Carbon type, ½ watt (R26)
14532	Resistor—Voltage divider comprising one 1500 Ohm, one 2500 Ohm, one 3900 Ohm, one 27 Ohm and one 165 Ohm sections (R20, R21, R22, R24, R25)
14343	Retainer—Station selector knob shaft and pulley retainer
14350	Screw—No. 8-32 x 3/16 square head set screw for drum Stock No. 14345 gear Stock No. 30085 and hub and arm on band indicator cable
14374	Shield—Antenna or R.F. coil shield
12008	Shield—First or Second I.F. transformer shield
14375	Shield—Oscillator coil shield
14114	Socket—Dial lamp socket
11195	Socket—5 contact 5T4 Radiotron socket
11196	Socket—8 contact 6F6, 6H6, 6K7, 6L7, 6N7, or 6J7 Radiotron socket
12907	Spring—Tension spring for indicator drum gear Stock No. 30085
14342	Spring—Tension spring for idler Stock No. 14341
12007	Spring—Retaining spring for core Stock No. 12006 and No. 12800
14371	Switch—Low frequency tone and power switch (S4, S5)
14515	Switch—Range switch (S1, S2, S3)
14376	Transformer—First I.F. transformer (L14, L15, C12, C13)
14283	Transformer—Second I.F. transformer (L16, L17, C27, C28, C29, R5, R6)
11211	Transformer—Power transformer 105-125 volts, 50-60 cycle (T1)
11212	Transformer—Power transformer 105-125 volts, 25-60 cycle (T1)
11213	Transformer—Power transformer 105-125/140-160/200-250 volts, 50-60 cycle (T1)
14335	Volume Control—(R9)
14379	Washer—Felt washer for indicator pointer
	REPRODUCER ASSEMBLIES MODEL 810T (RL-63-F2)
14356	Board—3 contact reproducer terminal board
13866	Cap—Cone center dust cap
11234	Coil—Field coil (L20)
11469	Coil—Hum neutralizing coil (L-19)
12642	Cone—Reproducer cone and dust cap (L18)
5039	Plug—4 contact male plug for reproducer
14533	Reproducer—Reproducer complete
14358	Screw—Screw, washer, and lockwasher to hold core in yoke
14534	Transformer—Output transformer (T2)
14357	Washer—Spring washer to hold field coil
	REPRODUCER ASSEMBLIES MODELS 810K and 810K1 (RL-70-E2)
13866	Cap—Dust cap for cone center
11234	Coil—Field coil (L20)
11469	Coil—Hum neutralizing coil (L19)
12667	Cone—Reproducer cone and dust cap (L18)
5039	Plug—4 contact male plug for reproducer
14535	Reproducer—Reproducer complete
14358	Screw—Screw, washer and lockwasher to hold core in yoke
14534	Transformer—Output transformer (T2)
14357	Washer—Spring washer to hold field coil
	MISCELLANEOUS ASSEMBLIES
14527	Escutcheon—Station selector escutcheon and crystal complete with tone and band indicating strips
14528	Index—Tone control indicating strip—mounts in station selector escutcheon
14529	Index—Band indicating strip—mounts in station selector escutcheon
14359	Knob—Station selector knob
14269	Knob—Volume control, tone control or range switch knob
11210	Screw—Chassis mounting screw and washer assembly for console model
11377	Screw—Chassis mounting screw and washer assembly for the table model
4982	Spring—Retaining spring for knob Stock No. 14359
14270	Spring—Retaining spring for knob Stock No. 14269

©John F. Rider, Publisher

MODEL 810T4
Parts List

RCA MFG. CO., INC.

RADIOTRON COMPLEMENT

(1) RCA-6K7 ..... R-F Amplifier
(2) RCA-6J7 ..... Heterodyne Oscillator
(3) RCA-6L7 ..... First Detector
(4) RCA-6K7 ..... Intermediate Amplifier
(5) RCA-6H6 ..... Second Detector and A.V.C.
(6) RCA-6N7 ..... Phase Inverter A-F Amplifier
(7) RCA-6F6 ..... Power Output
(8) RCA-6F6 ..... Power Output
(9) RCA-6G5 ..... "Magic Eye" Tuning Tube
(10) RCA-5U4G ..... Full-Wave Rectifier

REPLACEMENT PARTS

Insist on genuine factory tested parts, which are readily identified and may be purchased from authorized dealers.

STOCK No.	DESCRIPTION
	RECEIVER ASSEMBLIES
12038	Band—Rubber band for tuning tube
14384	Belt—Variable condenser drive belt
14517	Board—Antenna and ground terminal board
12717	Board—Phonograph terminal board
14338	Bushing—Variable condenser mounting bushing assembly
14524	Cable—Band indicator cable, approximately 6½ inches long
14523	Cable—Tone control indicator cable, approximately 3 inches long
14394	Cable—Tuning tube cable and socket
11350	Cap—Grid contact cap
12607	Cap—First I-F transformer shield top
12581	Cap—Second I-F transformer shield top
12884	Capacitor—Adjustable trimmer (long) (C2, C9, C23, C26, C46, C54, C56)
12714	Capacitor—Adjustable trimmer (medium) (C55)
12896	Capacitor—15 Mmfd. (C25)
13545	Capacitor—39 Mmfd. (C48)
12723	Capacitor—56 Mmfd. (C47)
30233	Capacitor—68 Mmfd. (C44)
12720	Capacitor—100 Mmfd. (C11)
14262	Capacitor—110 Mmfd. (C12, C13)
12404	Capacitor—120 Mmfd. (C27, C28)
12724	Capacitor—120 Mmfd. (C18)
12406	Capacitor—180 Mmfd. (C29)
30232	Capacitor—200 Mmfd. (C45)
14546	Capacitor—220 Mmfd. (C5)
12952	Capacitor—330 Mmfd. (C3, C10, C33)
30231	Capacitor—510 Mmfd. (C24)
13762	Capacitor—1,500 Mmfd. (C16)
12729	Capacitor—1,550 Mmfd. (C22)
12728	Capacitor—4,500 Mmfd. (C21)
12897	Capacitor—4,700 Mmfd. (C6)
4838	Capacitor—.005 Mfd. (C39, C40, C52, C53)
13138	Capacitor—.01 Mfd. (C31, C35, C36, C50)
11315	Capacitor—.015 Mfd. (C32)
4870	Capacitor—.025 Mfd. (C30, C34)
4839	Capacitor—0.1 Mfd. (C4, C17, C49)
12484	Capacitor—0.25 Mfd. (C15)
12741	Capacitor—0.5 Mfd. (C37, C51)
5212	Capacitor—16 Mfd. (C41)
14531	Capacitor—25 Mfd. (C42)
30228	Coil—Antenna coil and shield—A, B, C, and X bands (L1, L2, L3, L4, L21)
14516	Coil—Oscillator coil and shield—A, B, and C bands (L11, L12, L13)
12881	Coil—Oscillator coil and shield—X band only (L23)
30229	Coil—R-F coil and shield—A, B, C, and X bands (L5, L6, L7, L8, L9, L10, L22)
14513	Condenser—3-gang variable tuning condenser (C1, C8, C19)
5040	Connector—4-contact female connector for reproducer cable
30567	Connector—4-contact female connector with metal shell for reproducer cable in later production
12006	Core—Adjustable core and stud for transformer, Stock Nos. 14376 and 14308
12800	Core—Adjustable core and stud for coil, Stock No. 14516
30230	Dial—Station selector dial scale, complete with tuning tube escutcheon
14514	Drive—Variable condenser vernier drive pinion gear and shaft
14345	Drum—Variable condenser drive belt drum, complete with set screws
14387	Escutcheon—Tuning tube escutcheon
11982	Fastener—Dial scale fastener
30085	Gear—Indicator drive gear and hub, and pointer stem and gear
14341	Idler—Station selector drive belt idler
14519	Indicator—Station selector indicator pointer
14382	Indicator—Vernier indicator pointer
5226	Lamp—Dial lamp
14028	Nut—Jamb nut for adjustable trimmer capacitor, Stock Nos. 12714 and 12884
12471	Plate—6J7 Radiotron socket mounting plate and rubber cushions—less socket
14340	Pulley—Station selector drive belt pulley and knob shaft
30227	Reflector—Dial reflector and bracket, complete with dial lamp bracket, tuning tube bracket and tone and band indicators
13250	Resistor—330 ohms, carbon type, ½ watt (R26)
14720	Resistor—1,000 ohms, carbon type, ½ watt (R2)
14078	Resistor—18,000 ohms, carbon type, 1 watt (R29)
14284	Resistor—22,000 ohms, carbon type, 1/10 watt (R5)
11300	Resistor—33,000 ohms, carbon type, 1/10 watt (R19)
13735	Resistor—33,000 ohms, carbon type, ½ watt (R4, R10)
11646	Resistor—47,000 ohms, carbon type, ½ watt (R12)
12333	Resistor—68,000 ohms, carbon type, ½ watt (R6)
8064	Resistor—82,000 ohms, carbon type, ½ watt (R27)
11281	Resistor—100,000 ohms, carbon type, 1/10 watt (R18)
5145	Resistor—100,000 ohms, carbon type, ½ watt (R14, R15)
5027	Resistor—150,000 ohms, carbon type, ½ watt (R28)
11453	Resistor—270,000 ohms, carbon type, 1/10 watt (R16, R17)
11172	Resistor—470,000 ohms, carbon type, ½ watt (R11)
11397	Resistor—560,000 ohms, carbon type, 1/10 watt (R1, R3)
12013	Resistor—1 megohm, carbon type, 1/10 watt (R23)
13730	Resistor—1 megohm, carbon type, ½ watt (R13)
11626	Resistor—2.2 megohms, carbon type, ½ watt (R7, R8)
14532	Resistor—Voltage divider — comprising one 1,500 ohm, one 2,500 ohm, one 3,900 ohm, one 27 ohm, and one 165 ohm sections (R20, R21, R22, R24, R25)
14343	Retainer—Station selector knob shaft and pulley retainer
14350	Screw—No. 8-32 x 3/16 square-head set-screw for drum, Stock No. 14345, gear, Stock No. 30085, and hub and arm on band indicator cable
12799	Shield—Antenna or R-F coil shield
12008	Shield—First or second I-F transformer shield
14375	Shield—Oscillator coil shield for Stock No. 14516
12883	Shield—Oscillator coil shield for Stock No. 12881
14114	Socket—Dial lamp socket
11195	Socket—5-contact 5U4G Radiotron socket
11196	Socket—8-contact 6F6, 6H6, 6K7, 6L7, 6J7, or 6N7 Radiotron socket
12907	Spring—Tension spring for indicator drum gear, Stock No. 30085
14342	Spring—Tension spring for idler, Stock No. 14341
12007	Spring—Retaining spring for core, Stock Nos. 12006 and 12800
30084	Switch—High-frequency tone and power switch (S4, S5)
30226	Switch—Range switch (S1, S2, S3)
12654	Trap—Wave trap (L24)
14376	Transformer—First I-F transformer (L14, L15, C12, C13)
14308	Transformer—Second I-F transformer (L16, L17, C27, C28, C29, R5)
11212	Transformer—Power transformer, 105-125 volts, 25-60 cycles (T1)
11213	Transformer—Power transformer, 105-250 volts, 50-60 cycles (T1)
14335	Volume Control (R9)
14379	Washer—Felt washer for indicator pointer
	REPRODUCER ASSEMBLIES (RL-63F-2)
14356	Board—3-contact reproducer terminal board
13866	Cap—Cone center dust cap
11234	Coil—Field coil (L20)
11469	Coil—Hum neutralizing coil (L19)
12642	Cone—Reproducer cone and dust cap (L18)
5039	Plug—4-contact male plug for reproducer
14533	Reproducer, complete
14358	Screw—Screw, washer, and lockwasher to hold core in yoke
14534	Transformer—Output transformer (T2)
14357	Washer—Spring washer to hold field coil
	MISCELLANEOUS ASSEMBLIES
5040	Connector—4-contact female connector for reproducer interconnecting cable in later production
30568	Connector—4-contact male connector for reproducer interconnecting cable in later production
30234	Escutcheon—Station selector escutcheon and crystal, complete with tone and band indicating strips
14611	Index—Tone control indicating strip—mounts in station selector escutcheon
30235	Index—Band indicating strip—mounts in station selector escutcheon
14359	Knob—Station selector knob
14269	Knob—Volume control, tone control, or range switch knob
11377	Screw—Chassis mounting screw and washer assembly
4982	Spring—Retaining spring for knob, Stock No. 14359
14270	Spring—Retaining spring for knob, Stock No. 14269

Height	20¼ inches	Weight (shipping)	43 pounds
Width	17¼ inches	Chassis Base Dimensions	14⅞ inches x 9¾ inches x 3¼ inches
Depth	11 11/16 inches	Over-all Chassis Height	9¾ inches
Weight (net)	33 pounds		

©John F. Rider, Publisher

©John F. Rider, Publisher

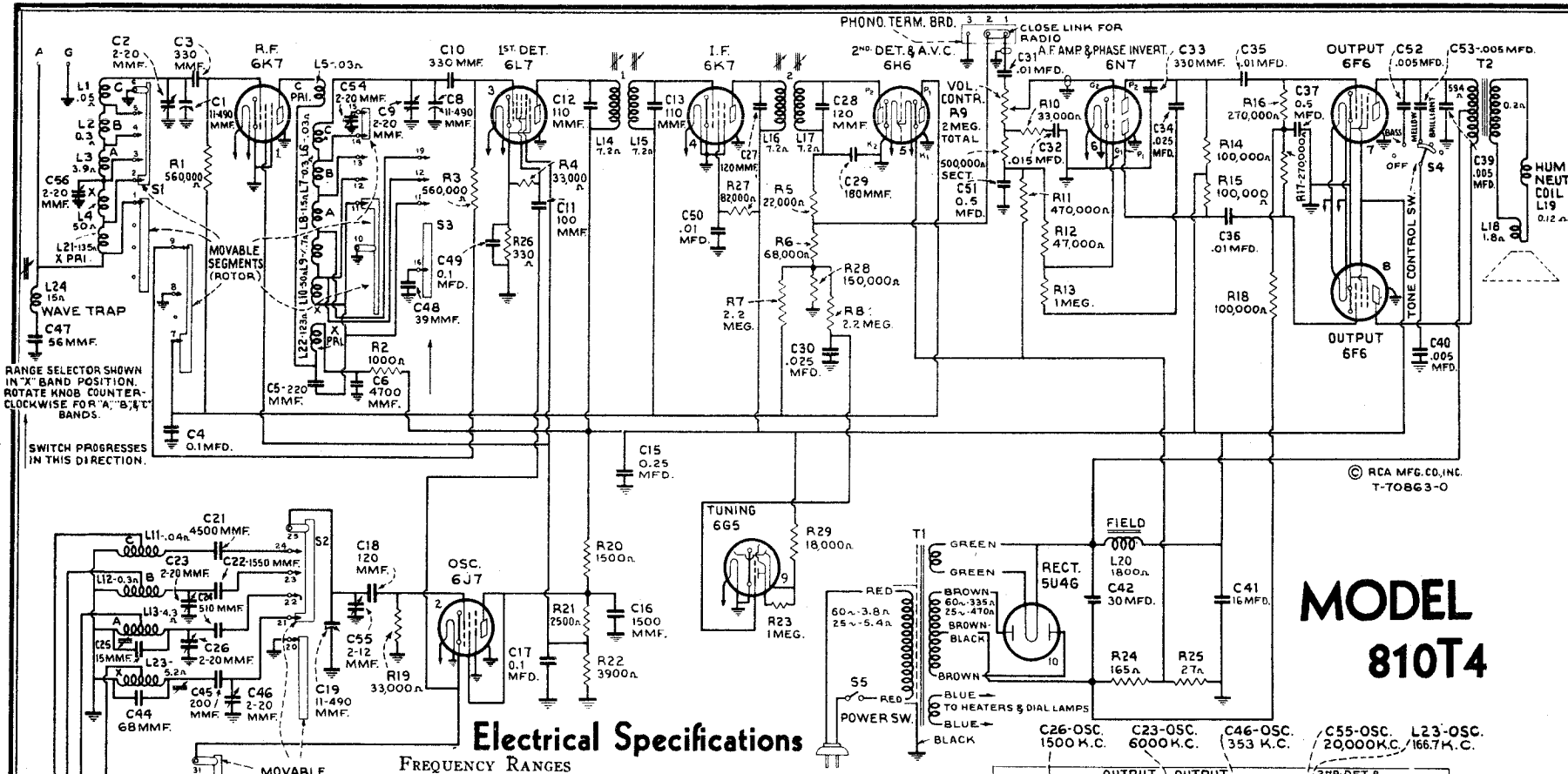

MODEL 810T4

Electrical Specifications

Frequency Ranges

"Long Wave" (X)..... 2,000-850 meters (150-353 kc)
"Medium Wave" (A)..... 565-180 meters (531-1,666 kc)
"Short Wave 1" (B)..... 2.1-6.8 mc (143-44.1 meters)
"Short Wave 2" (C) ..... 6.8-22 mc (44.1-13.64 meters)
Intermediate Frequency..... 460 kc

R-F Alignment Frequencies

"Short Wave 2" (C)..... 20,000 kc (osc., det., ant.)
"Short Wave 1" (B)..... 6,000 kc (osc.)
"Medium Wave" (A)..... 600 kc (osc.), 1,500 kc (osc.)
"Long Wave" (X). 166.7 kc (osc.), 353 kc (osc., det., ant.)

Pilot Lamps (5)..... Mazda No. 46, 6.3 volts, 0.25 amp.

Power Output

Undistorted ..... 10 watts
Maximum..... 12.5 watts

Loudspeaker

Type..... 8-inch Electrodynamic
Impedance (v.c.) 2.2 ohms at 400 cycles

Power Supply Ratings

Rating A..... 105-125 volts, 50-60 cycles, 135 watts
Rating B..... 105-125 volts, 25-60 cycles, 135 watts
Rating C..... 100-130/140-160/195-250 volts, 40-60 cycles, 135 watts

Operating Controls. (1) Power Switch—Tone; (2) Tuning (large inner knob), Range Selector (small outer knob, left to right "X," "A," "B," "C"); (3) Volume

Tuning Drive Ratio ..... 20 to 1

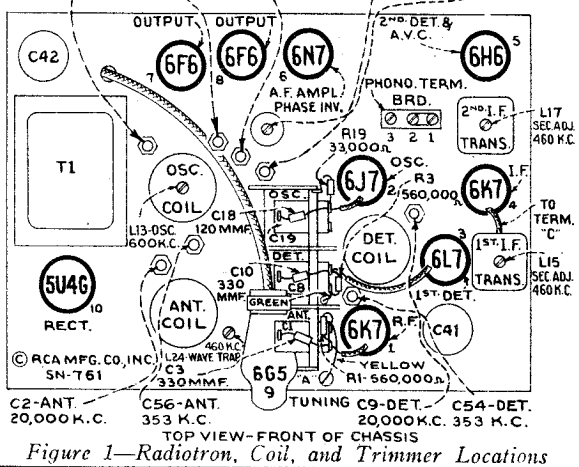

Figure 1—Radiotron, Coil, and Trimmer Locations

MODEL 810T4
Chassis Wiring
Coils

RCA MFG. CO., INC.

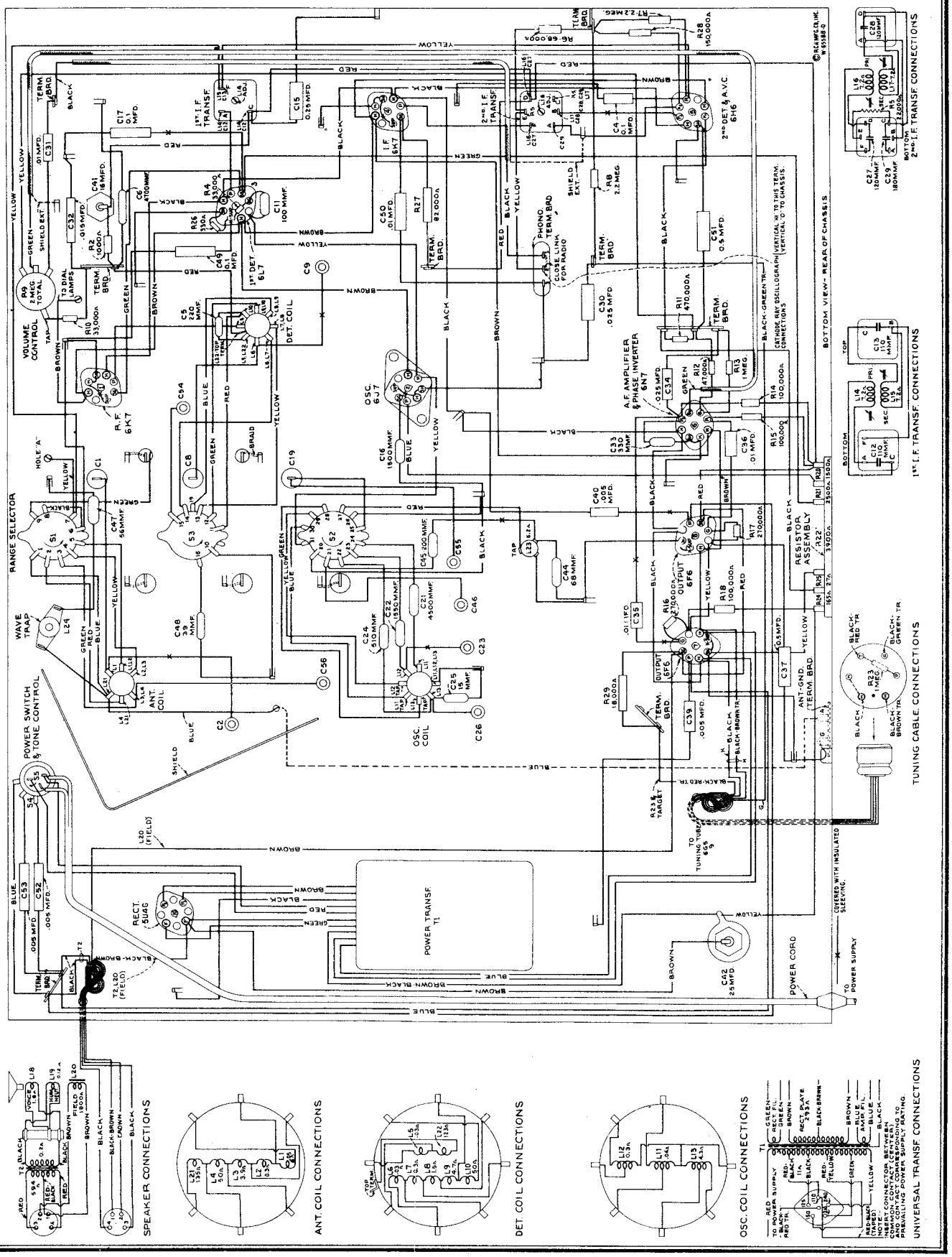

©John F. Rider, Publisher

RCA MFG. CO., INC.

MODEL 810T4
Lead Dress, Voltage Notes, Trimmers

General Description

This receiver employs a ten-tube, four-band, "Magic Brain," superheterodyne circuit, the arrangement of which is shown by the Schematic Circuit Diagram. Features of design include an r-f amplifier stage; "qumulative-wound" "A" antenna and r-f transformers for high signal-to-noise ratio; magnetite-core, i-f transformers and low-frequency "X" and "A" oscillator tracking; automatic volume control; phonograph terminal board; "Magic Eye" tuning tube; plunger-type, air-dielectric trimming capacitors; aural-compensated, audio-volume control; "Bass-Mellow-Brilliant" tone control; audio phase-inverter voltage amplifier; push-pull, power-output stage; improved dust-proof electrodynamic loudspeaker; a new sunburst dial with short-wave stations listed by name and illuminated band and tone indicators; and the improved "Magic Voice."

Service Data

The various diagrams of this booklet contain such information as will be needed to isolate causes for defective operation if such develops. The ratings of the resistors, capacitors, coils, etc., are indicated adjacent to the symbols signifying these parts on the diagrams. Identification titles such as R1, L1, C1, etc., provide reference between the illustrations and Replacement Parts List. The coils, transformer windings, and reactors are rated in terms of d-c resistance to permit continuity checks.

Loudspeaker.—Centering of the loudspeaker is made in the usual manner with three narrow celluloid or paper feelers after first removing the front dust cover. This may be removed by softening its cement with a light application of acetone, using care not to allow the acetone to flow into the air gap. The dust cover should be cemented back in place with ambroid upon completion of adjustment.

Precautionary Lead Dress.—(1) Twist yellow, blue, and green leads from oscillator coil to S2. (2) Dress C45 and C21 away from C55. (3) Dress black lead from S2 to ground lance away from C55. (4) Dress yellow lead from 6J7 socket to S2 under bus on 6J7 socket. (5) Make lead from S3 to ground 2½ inches long and dress away from chassis. (6) Twist filament leads. (7) Dress shielded lead from C31 to phono. term. board away from 6L7 socket. (8) Dress yellow lead from term. "K" of 6J7 to C11 away from chassis and from brown filament lead. (9) Dress all molded capacitors perpendicular to chassis. (10) Dress filament leads away from terms. "G1" and "G2" of 6N7. (11) Twist blue leads from terms. "P" of 6F6's. Make the following as short as possible: (12) Lead from oscillator coils to ground. (13) Lead from S2 to C19. (14) Lead from detector coil to S3. (15) Lead from detector coil to C8. (16) Lead from S1 to chassis ground lance. (17) Lead from antenna coil, to S1. (18) Lead from antenna coil to C1. (19) Yellow lead from 2nd i-f transformer to phono. term. board. When necessary to replace bus leads, use only wire having same diameter as original.

Phonograph Attachment.—A terminal board is provided for connecting a phonograph into the audio amplifying circuit. RCA Victor Models R-93, R-93-A, R-93-2, or R-94 Record Players should be connected as follows: Remove link between terminals 1 and 2 on terminal board. Connect green wire in Radio-Record switch cable to terminal 1, yellow to terminal 2, and shield extension to terminal 3. Tape unused red and blue leads separately. Connect a 2-conductor twisted cable between the Record Player binding posts and the screw terminals on Radio-Record switch. If additional volume is desired, connect an RCA Stock No. 9632 transformer between the two-conductor twisted cable and the screw-terminals on Radio-Record switch as follows: yellow and brown transformer leads and one side of twisted cable to ground screw-terminal on switch; black transformer lead to other side of twisted cable; and blue transformer lead to other screw-terminal on switch.

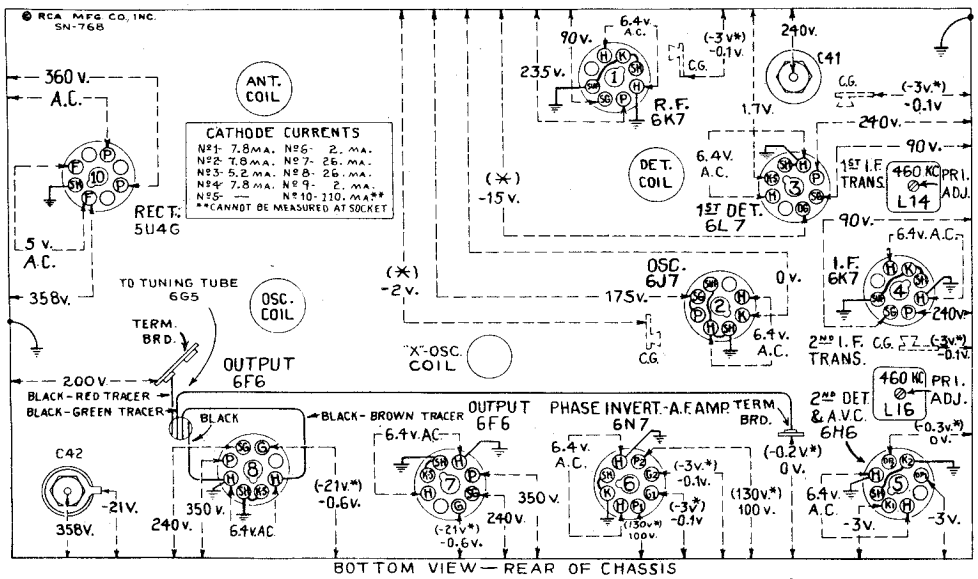

Figure 2—Radiotron Socket Voltages, Coil, and Trimmer Locations

Measured at 115 volts, 60-cycle supply—Tuned to approximately 1,000 kc or 300 meters, "A" band ("Medium Wave")—No signal being received—Volume control minimum

Note: Two voltage values are shown for some readings. The value shown in parentheses with asterisk (*) indicates operating conditions without voltmeter loading. The other value (generally lower) is the actual measured voltage and differs from the value shown in parentheses because of the additional loading of the voltmeter through the high series circuit resistance.

Voltage values as specified should hold within ±20% when the receiver is normally operative at its rated line voltage. To duplicate the conditions under which the voltages were measured requires a 1,000-ohm-per-volt d-c meter, having ranges of 10, 50, 250 and 500 volts. Use the nearest range above the specified measured voltage. A-c voltages were measured with a corresponding a-c meter.

©John F. Rider, Publisher

MODEL 810T4
Alignment

RCA MFG. CO., INC.

Alignment Procedure

Calibrate the tuning dial by adjusting main dial pointer to the low-frequency (end) calibration mark on dial with the gang tuning-condenser plates in full-mesh position; then adjust the small (vernier) pointer to "0." These are friction adjustments.

Perform alignment in proper order, tabulated below, starting with No. 1 and following all operations across, then No. 2, etc. Adjustment locations are shown on figures 1 and 2.

Cathode-ray alignment is highly preferable; the connections to the chassis are shown on figure 4. If an output indicator is used, connect it across the loudspeaker voice-coil and advance the receiver volume control to full-volume position.

Connect the "low" output terminal of the test oscillator to the receiver "G" (ground) terminal for all alignment operations. Regulate the output of the test oscillator so that minimum signal is applied to the rec er to obtain an observable output indication. This will avoid a-v-c action.

The term "Dummy antenna" means the device which must be connected between the "high" test-oscillator output and the point of connection to the receiver in order to obtain ideal alignment. "No signal, 545-400 meters" means that the receiver should be tuned to a point between 545 and 400 meters where no signal or interference is received from a station or local (heterodyne) oscillator. In extreme noisy locations, one end of C10 (top of gang) should be unsoldered during i-f alignment.

Conversion of kilocycles (kc) to meters for alignment frequencies is as follows: 20,000 kc (20 mc) = 15 meters; 6,000 kc (6 mc) = 50 meters; 1,500 kc = 200 meters; 600 kc = 500 meters; 460 kc = 652 meters; 353 kc = 850 meters; and 166.7 kc = 1,800 meters.

For further details on alignment, refer to booklet "RCA Victor Receiver Alignment."

Order of Alignment	Test Oscillator			Range Selector	Receiver Dial Setting	Circuit to Adjust	Adjustment Symbols	Adjust to Obtain
	Connection to Receiver	Dummy Antenna	Frequency Setting					
1	6K7 I-F Grid Cap	.001 Mfd.	460 kc	"Medium Wave"	No Signal 545-400 meters	2nd I-F Trans.	L16 and L17	Max. (peak)
2	6L7 Det. Grid Cap	.001 Mfd.	460 kc	"Medium Wave"	No Signal 545-400 meters	1st I-F Trans.	L14 and L15	Max. (peak)
3	Ant. Term.	200 Mmfd.	460 kc	"Medium Wave"	No signal 545-400 meters	Wave Trap	L24	Minimum Output
4	Ant. Term.	300 Ohms	20,000 kc	"Short Wave 2"	20 mc	"C" Osc.	C55	Max. (peak)*
5	Ant. Term.	300 Ohms	20,000 kc	"Short Wave 2"	20 mc	"C" Det.	C9	Max. (peak)†
6	Ant. Term.	300 Ohms	20,000 kc	"Short Wave 2"	20 mc	"C" Ant.	C2	Max. (peak)‡
7	Ant. Term.	300 Ohms	6,000 kc	"Short Wave 1"	6 mc	"B" Osc.	C23	Max. (peak)*
8	Ant. Term.	200 Mmfd.	600 kc	"Medium Wave"	500 meters	"A" L-F Osc.	L13	Max. (peak)
9	Ant. Term.	200 Mmfd.	1,500 kc	"Medium Wave"	200 meters	"A" H-F Osc.	C26	Max. (peak)
10	Ant. Term.	200 Mmfd.	600 kc	"Medium Wave"	500 meters	"A" L-F Osc.	L13	Max. (peak)
11	Ant. Term.	200 Mmfd.	1,500 kc	"Medium Wave"	200 meters	"A" H-F Osc.	C26	Max. (peak)
12	Ant. Term.	200 Mmfd.	166.7 kc	"Long Wave"	1,800 meters	"X" L-F Osc.	L23	Max. (peak)
13	Ant. Term.	200 Mmfd.	353 kc	"Long Wave"	850 meters	"X" H-F Osc.	C46	Max. (peak)
14	Ant. Term.	200 Mmfd.	353 kc	"Long Wave"	850 meters	"X" Det.	C54	Max. (peak)
15	Ant. Term.	200 Mmfd.	353 kc	"Long Wave"	850 meters	"X" Ant.	C56	Max. (peak)
16	Ant. Term.	200 Mmfd.	166.7 kc	"Long Wave"	1,800 meters	"X" L-F Osc.	L23	Max. (peak)
17	Ant. Term.	200 Mmfd.	353 kc	"Long Wave"	850 meters	"X" H-F Osc.	C46	Max. (peak)

* Use minimum capacity peak if two peaks can be obtained.
† Use maximum capacity peak if two peaks can be obtained.
‡ After this adjustment, check for image signal by shifting receiver dial to 19,080 mc.

©John F. Rider, Publisher

RCA MFG. CO., INC.

MODEL 813K
Schematic

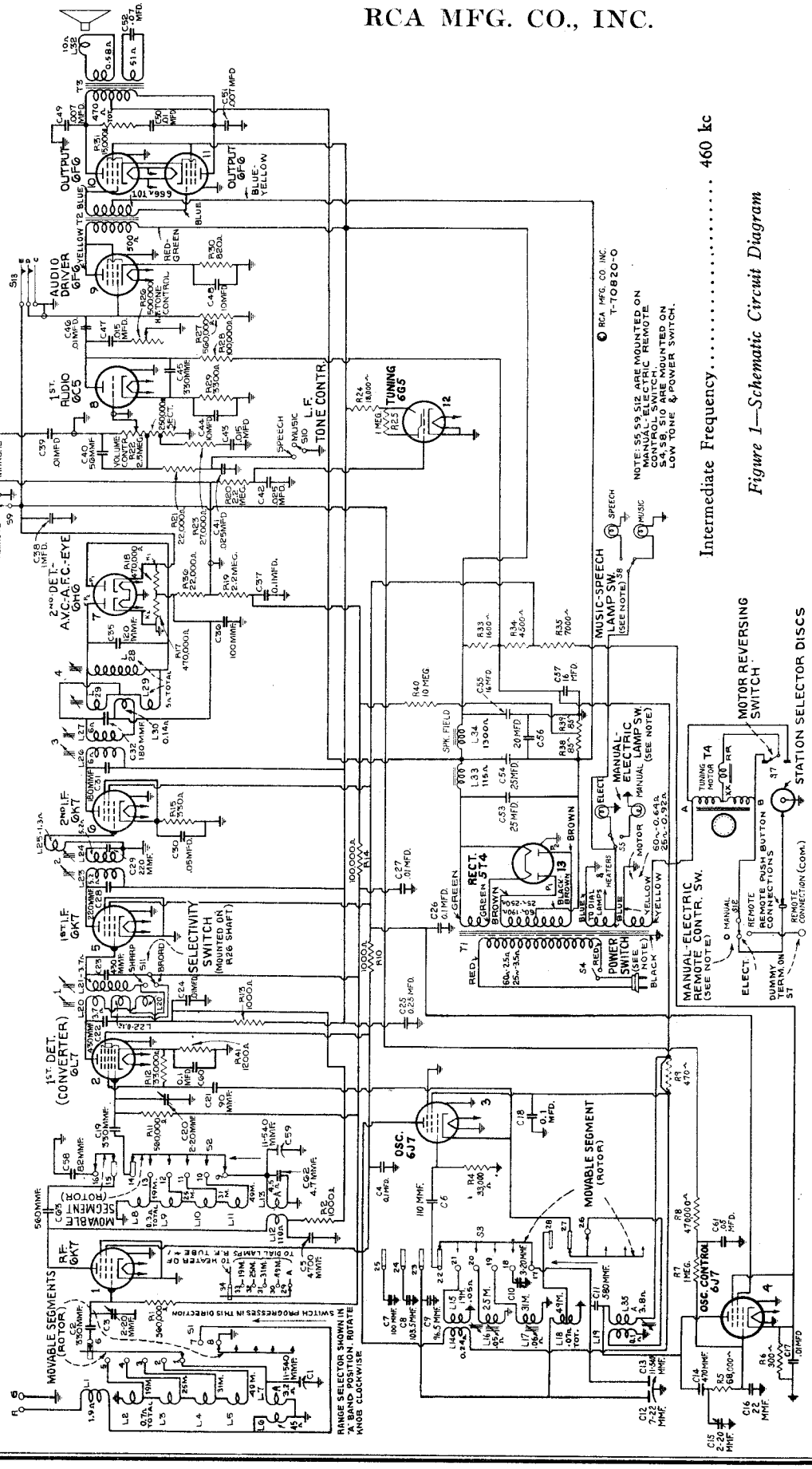

Intermediate Frequency..... 460 kc

Figure 1—Schematic Circuit Diagram

NOTE: On later production, a 1.8-ohm resistor (R42) is connected in series with the indicator lamps. (See figure 2, between term. 34 of range selector and center term. of S5.) When servicing, this resistor (Stock No. 30647) should be installed.

FREQUENCY RANGES

"Standard Broadcast" (A)..... 530-1,720 kc
"49M." (49 Meters)..... 5,970-6,240 kc
"31M." (31 Meters)..... 9,410-9,690 kc
"25M." (25 Meters)..... 11,680-11,920 kc
"19M." (19 Meters)..... 15,090-15,380 kc

R-F ALIGNMENT FREQUENCIES

"31M." (31 Meters)..... 9,600 kc (osc., det., ant.)
"25M." (25 Meters)..... 11,700 kc (osc.)
"19M." (19 Meters)..... 15,300 kc (osc.)
"49M." (49 Meters)..... 6,100 kc (osc.)
"Standard Broadcast" (A)... 600 kc (osc.), 1,500 kc (osc.)

©John F. Rider, Publisher

MODEL 813K
Chassis Wiring
Transformer Connections

RCA MFG. CO., INC.

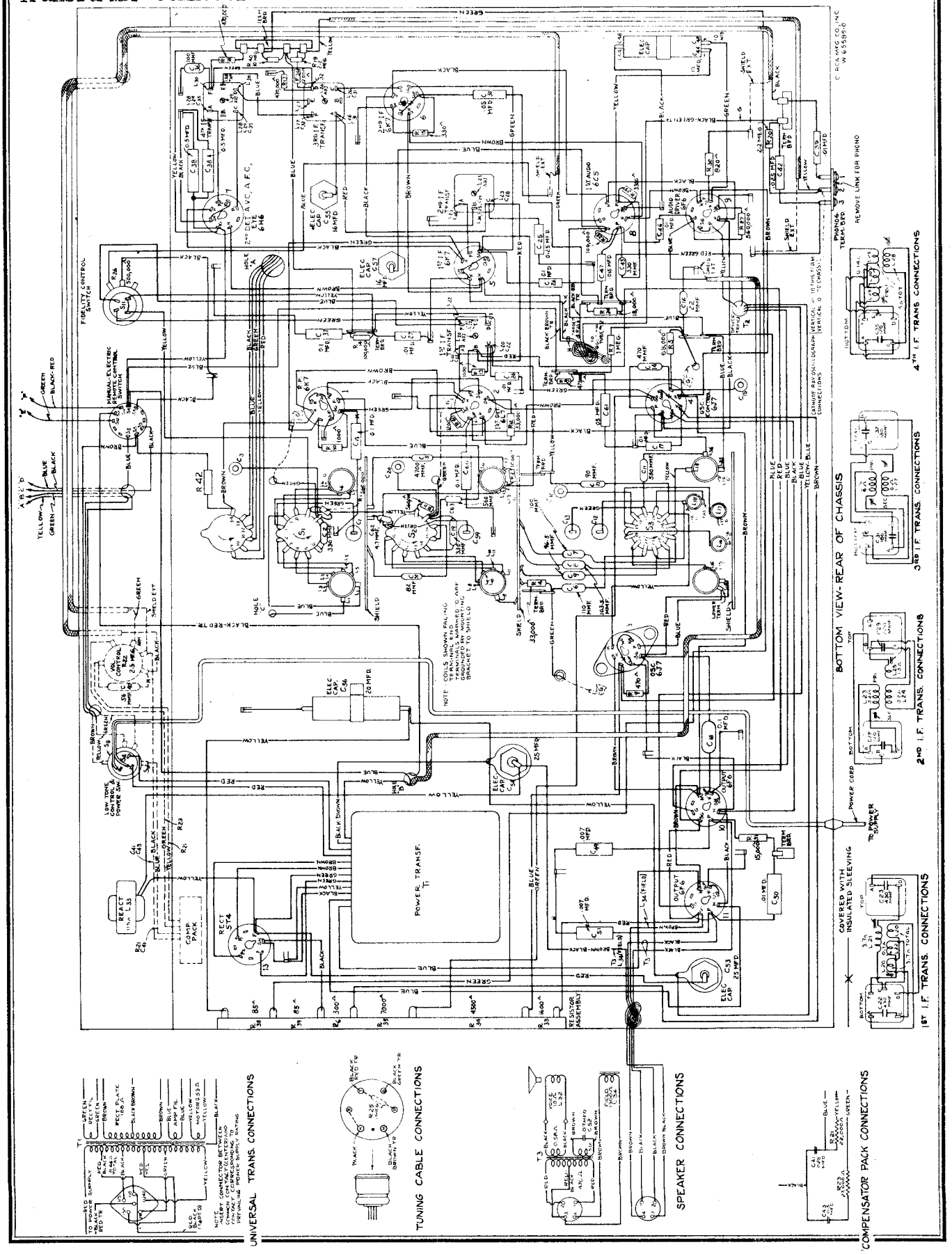

©John F. Rider, Publisher

RCA MFG. CO., INC.

MODEL 813K
Voltage, Trimmers
Socket, Data

Thirteen-Tube, Five-Band, A-C, Superheterodyne Receiver

General Description

This receiver employs a thirteen-tube, five-band, "Magic Brain" superheterodyne circuit. Features of design include "Electric Tuning" with push-button operation; automatic frequency control; spread-band "Overseas" dial; "qumulative-wound" antenna and detector "A" band coils; tuned r-f amplifier; magnetite-core adjusted i-f transformers and low-frequency "A" oscillator tracking; two-stage i-f amplifier; phonograph terminal board; "Magic Eye" tuning tube; twelve-inch electrodynamic loudspeaker; plunger-type, air-dielectric trimming capacitors; temperature-stabilized capacitors; two-point aural-compensated volume control; "Fidelity" control; "Music-Speech" control; and a driven push-pull power-output stage. In addition, this model has a cabinet incorporating the "Sonic Arc" Magic Voice.

Radiotron Cathode Current Readings

Measured with Milliammeter Connected at Tube Socket Cathode Terminals Under Conditions Similar to Those of Voltage Measurements

(1)	RCA-6K7—R-F Amp.	9.0 ma.
(2)	RCA-6L7—1st Det.	3.5 ma.
(3)	RCA-6J7—Osc.	8.5 ma.
(4)	RCA-6J7—Osc. Control	1.8 ma.
(5)	RCA-6K7—1st I-F Amp.	9.0 ma.
(6)	RCA-6K7—2nd I-F Amp.	8.0 ma.
(7)	RCA-6H6—2nd Det.	———
(8)	RCA-6C5—A-F Amp.	0.9 ma.
(9)	RCA-6F6—Driver	22 ma.
(10)	RCA-6F6—Output	25 ma.
(11)	RCA-6F6—Output	25 ma.
(12)	RCA-6G5—Tuning Tube	3.0 ma.
(13)	RCA-5T4—Rectifier	128 ma.**

(**Cannot be measured at socket)

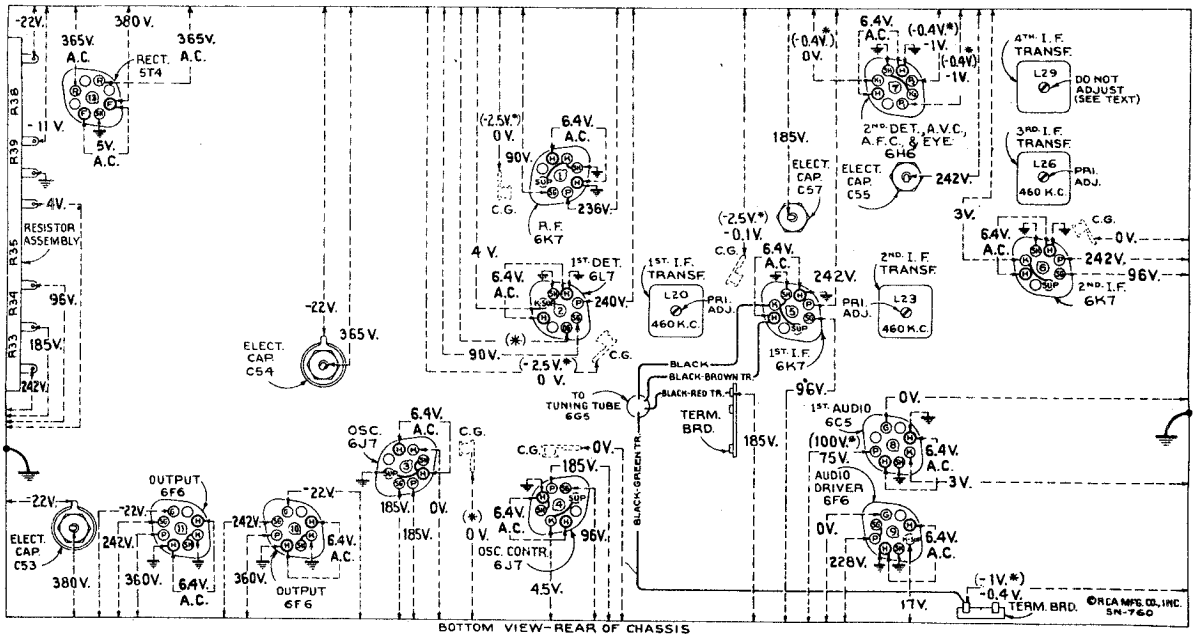

Figure 6—Radiotron Socket Voltages, Coil, and Trimmer Locations

Measured at 115 volts, 60-cycle supply—Tuned to approximately 1,000 kc ("Standard Broadcast")—"Manual" control—No signal being received—Volume control minimum—Fidelity control optional

Note: Two voltage values are shown for some readings. The value shown in parentheses with asterisk (*) indicates operating conditions without voltmeter loading. The other value (generally lower) is the actual measured voltage and differs from the value shown in parentheses because of the additional loading of the voltmeter.

Voltage values as specified should hold within ±20% when the receiver is normally operative at its rated line voltage. To duplicate the conditions under which the voltages were measured requires a 1,000-ohm-per-volt d-c meter, having ranges of 10, 50, 250 and 500 volts. Use the nearest range above the specified measured voltage. A-c voltages were measured with a corresponding a-c meter.

©John F. Rider, Publisher

MODEL 813K
Socket, Trimmers
Tuner Wiring

RCA MFG. CO., INC.

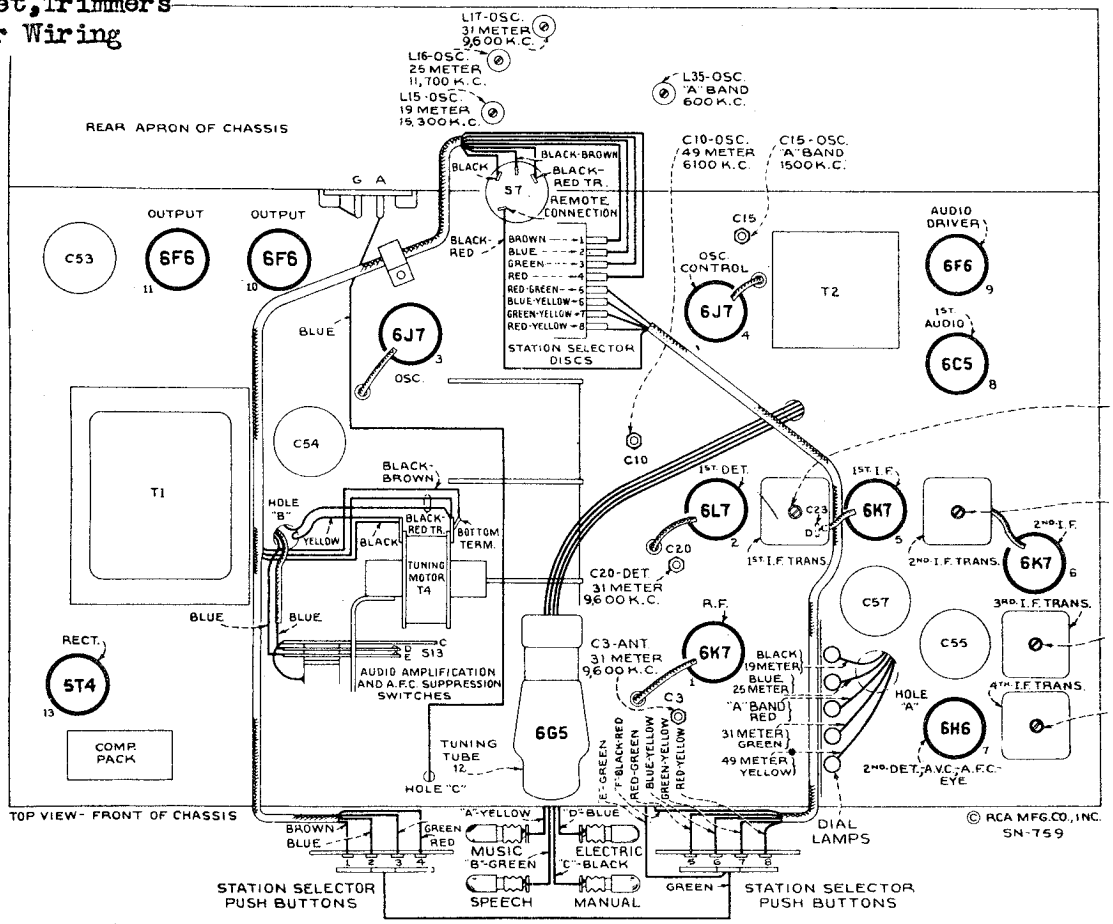

Figure 3—Radiotron, Coil, and Trimmer Locations

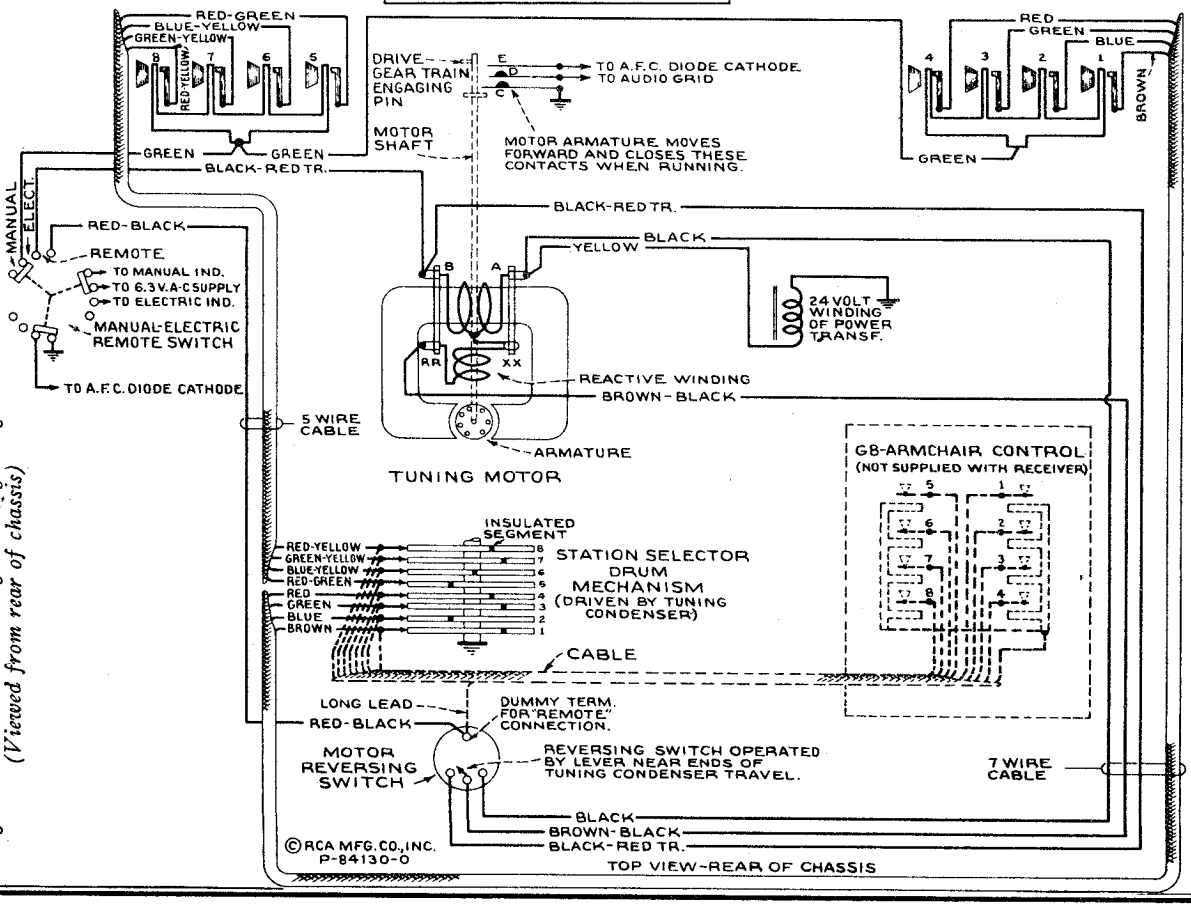

Figure 5—"Electric Tuning" Wiring Diagram (Viewed from rear of chassis)

©John F. Rider, Publisher

RCA MFG. CO., INC.

MODEL 813K
Alignment

Calibrate the tuning dial by adjusting dial pointer to the left ends of horizontal calibration lines with the gang tuning-condenser plates in full-mesh position. This is a screw-driver adjustment.

The "Fidelity" control should be turned counter-clockwise during all alignment operations. The "Manual-Electric-Remote" switch should be turned to "Manual" (clockwise) during alignment unless otherwise specified. The bottom shield-pan must be in place during spread-band alignment. Permit the set to operate at least five minutes before attempting alignment.

CAUTION.—The magnetite core screw L29 on the bottom of the 4th i-f transformer has been accurately adjusted, for an exact electrical balance of coil L29 to center tap, during manufacture and **should not be disturbed.** However, if for any reason the adjustment has been moved from its original position, it will be necessary to mechanically adjust this screw until the end of the stud protrudes exactly 1/8 of an inch (four threads exposed) above the brass bushing prior to any alignment operations.

Perform alignment in proper order, tabulated below, starting with No. 1 and following all operations across, then No. 2, etc. A-f-c discriminator adjustments should follow r-f and i-f adjustments tabulated below. Adjustment locations are shown on figures 3 and 6.

Cathode-ray alignment is preferable for adjustments 2, 3, and 4 due to the flat-top i-f characteristics; the connections to the chassis are shown on figure 2. If an output indicator is used, connect it across the loudspeaker voice-coil and advance the receiver volume control to full-volume position. The Magic Eye may be used as an output indicator for all other adjustments. It is preferable to replace the 6G5 tuning tube with a 6E5 during alignment.

Connect the "low" output terminal of the test oscillator to the receiver chassis for all alignment operations. Regulate the output of the test oscillator so that minimum signal is applied to the receiver to obtain an observable output indication. This will avoid a-v-c action and reduce possibility of error in spread-band adjustments.

The term "Dummy antenna" means the device which must be connected between the "high" test-oscillator output and the point of connection to the receiver in order to obtain ideal alignment. "No signal, 550-750 kc" means that the receiver should be tuned to a point between 550 and 750 kc where no signal or interference is received from a station or local (heterodyne) oscillator. "Min. Eye" means minimum width of dark sector of Magic Eye.

For further details on alignment, refer to booklet "RCA Victor Receiver Alignment."

Order of Alignment	Test Oscillator			Range Selector	Receiver Dial Setting	Circuit to Adjust	Adjustment Symbols	Adjust to Obtain
	Connection to Receiver	Dummy Antenna	Frequency Setting					
1	———	———	———	———	———	4th I-F Trans.	L28	Turn Extreme Counter-clockwise
2	No. 6, 6K7 2nd I-F Grid Cap	.001 Mfd.	460 kc	"Standard Broadcast"	No Signal 550-750 kc	3rd I-F Trans.	L26 and L27	Max. (peak)
3	No. 5, 6K7 1st I-F Grid Cap	.001 Mfd.	460 kc	"Standard Broadcast"	No Signal 550-750 kc	2nd I-F Trans.	L23 and L24	Max. (peak)
4	No. 2, 6L7 Det. Grid Cap	.001 Mfd.	460 kc	"Standard Broadcast"	No Signal 550-750 kc	1st I-F Trans.	L20 and L21	Max. (peak)
5	Ant. Term.	300 Ohms	1,600 kc a	"31M."	9.6 mc	"31M." Osc.	L17	Min. Eye b
6	Ant. Term.	300 Ohms	1,600 kc a	"31M."	9.6 mc	"31M." Det.	C20	Min. Eye
7	Ant. Term.	300 Ohms	1,600 kc a	"31M."	9.6 mc	"31M." Ant.	C3	Min. Eye
8	Ant. Term.	300 Ohms	1,300 kc a	"25M."	11.7 mc	"25M." Osc.	L16	Min. Eye c
9	Ant. Term.	300 Ohms	1,700 kc a	"19M."	15.3 mc	"19M." Osc.	L15	Min. Eye d
10	Ant. Term.	300 Ohms	6,000 kc e	"49M."	6.0 mc	"49M." Osc.	C10	Min. Eye f
11	Ant. Term.	300 Ohms	6,100 kc e	"49M."	6.1 mc	"49M." Osc.	C10	Min. Eye
12	Ant. Term.	200 Mmfd.	600 kc	"Standard Broadcast"	600 kc	"A" L-F Osc.	L35	Min. Eye
13	Ant. Term.	200 Mmfd.	1,500 kc	"Standard Broadcast"	1,500 kc	"A" H-F Osc.	C15	Min. Eye
14	Ant. Term.	200 Mmfd.	600 kc	"Standard Broadcast"	600 kc	"A" L-F Osc.	L35	Min. Eye
15	Ant. Term.	200 Mmfd.	1,500 kc	"Standard Broadcast"	1,500 kc	"A" H-F Osc.	C15	Min. Eye
16	Proceed to A-F-C Discriminator Adjustments Outlined Below							

a—Refer to "Spread-band Adjustments" below for Test Oscillator setting for adjustments 5, 6, 7, 8, and 9.

b—Use minimum inductance peak (plunger out) if two peaks can be obtained. To check for correct harmonic, carefully set Test Oscillator to 1,200 kc using Crystal Calibrator. Signal should be indicated by "Magic Eye" in "31M." band near 9.6 mc.

c—Use minimum inductance peak (plunger out) if two peaks can be obtained. To check for correct harmonic, carefully set Test Oscillator to 900 kc using Crystal Calibrator. Signal should be indicated by "Magic Eye" in "25M." band near 11.7 mc.

d—Use minimum inductance peak (plunger out) if two peaks can be obtained. To check for correct harmonic, carefully set Test Oscillator to 900 kc using Crystal Calibrator. Signal should be indicated by "Magic Eye" in "19M." band near 15.3 mc.

e—Refer to "Spread-band Adjustments" below for method of using the RCA Stock No. 9572 Crystal Calibrator for adjustments 10 and 11.

f—Use minimum capacity peak if two peaks can be obtained from 1,000 kc harmonics.

©John F. Rider, Publisher

MODEL 813K
Circuit Data
Adjustments, Lead Dress

RCA MFG. CO., INC.

Spread-band Adjustments.—Bottom shield-pan must be in place before attempting spread-band alignment. Alignment of the spread ("Overseas") bands requires special procedure since test oscillators used alone are not ordinarily sufficiently accurate for this purpose. The RCA Stock No. 9572 Crystal Calibrator affords a convenient and accurate alignment standard. Wrap a few turns of wire around the crystal calibrator and connect one free end to the antenna terminal of the receiver. Using the crystal calibrator to obtain the necessary accuracy, follow the tabulated alignment procedure for the "31M.", "25M.", and "19M." bands.

The "31M." band alignment, for example, is done as follows: Tune the receiver ("Standard broadcast" band) to the 1,000 kc crystal calibrator output with the crystal calibrator "Hi-Lo" switch in "Hi" position. Snap "Hi-Lo" switch to "Lo" and carefully tune receiver to 1,600 kc (the sixth 100 kc harmonic above 1,000 kc) for minimum "Magic Eye" opening (Min. Eye). Move crystal calibrator away from antenna wire, connect test oscillator, and carefully adjust test oscillator for minimum "Magic Eye" opening at a setting of approximately 1,600 kc. (If Stock No. 150 Test Oscillator is used, refer to second paragraph below.) Raise test-oscillator output to give sufficient harmonic output and use 6th harmonic (9,600 kc) for aligning in "31M." band at 9.6 mc. Align in the "25M." band at 11.7 mc (11,700 kc), the 9th harmonic of the test-oscillator 1,300 kc output. Align in the "19M." band at 15.3 mc (15,300 kc), the 9th harmonic of the test-oscillaton 1,700 kc output. In each case select the peak giving minimum "Magic Eye" opening.

For the "49M." band, snap crystal calibrator "Hi-Lo" switch to "Hi", turn the range selector to "49M." band, and set receiver dial pointer to 6.0 mc. Adjust oscillator trimming capacitor C10 for minimum "Magic Eye" opening. Use the peak indicated by the alignment table. Snap "Hi-Lo" switch to "Lo" and locate 6,100 kc (the first 100 kc harmonic above 6,000 kc) by slightly readjusting C10 with the dial pointer set at 6.1 mc. This method insures selection of correct crystal-calibrator harmonic.

When aligning with the RCA Stock No. 150 Test Oscillator use the variable (unmodulated) oscillator† and "Magic Eye" indication of receiver output. Set test-oscillator dial 800 kc lower than the desired signal for the four lower frequency ranges and 800 kc higher than the desired signal for the two high ranges and use in same manner as TMV-97-C. Insert an open-circuit telephone plug in the test oscillator "Ext. Mod." jack, so the modulated fixed-frequency oscillator will be cut off, and align on the unmodulated variable oscillator signal, which will close the "Magic Eye" and evidence itself by a rushing noise in the speaker.

If the crystal calibrator signals are weak, disconnect test oscillator while using the crystal calibrator.

More accurate alignment in the spread-bands can be accomplished by making final slight adjustments using American, English, or German short-wave broadcasting stations of known frequency for frequency standards.

A-F-C Discriminator Adjustments.—These adjustments are rather critical and should be performed with extreme care. Improper adjustment may result in complete failure of the oscillator control tube to function or else may cause it to detune the oscillator instead of tuning it to the signal. It is assumed that the magnetite core adjusting screw L28 (top of 4th i-f transformer) has been turned all the way out (extreme counter-clockwise) during the preceding tabulated adjustments. Adjustments are as follows: Remove spring "N" on link and arm assembly which connects the "Manual-Electric-Remote" switch shaft to the throw-out gear bracket. Turn "Fidelity" control counter-clockwise. Connect antenna to receiver antenna terminal. With the "Manual-Electric-Remote" switch in "Manual" (right) position, tune in a strong local station near 600 kc or the low-frequency end of the "A" band as accurately as possible by means of the tuning tube "Magic Eye." The most accurate adjustment will be obtained by adjusting the "vernier" tuning knob mid-way between the two points where the eye just appears to start to open. This will place the generated i-f carrier signal frequency exactly in the center of the i-f amplifier response curve (should be 460 kc if i-f amplifier was properly aligned) and is the frequency to which the a-f-c discriminator (4th i-f transformer) should be tuned to resonance. Without disturbing any of the receiver adjustments, place the "high" test-oscillator lead about ¾ of an inch from the grid cap lead of the RCA-6K7, 1st i-f amplifier tube, adjust the test-oscillator output to maximum, turn test-oscillator "Modulation" off, and carefully zero-beat the test-oscillator frequency (approximately 460 kc) with the i-f carrier signal. Avoid placing the test-oscillator lead nearer to the grid-cap lead than specified above, as doing so will tend to detune the i-f amplifier. It may be necessary to reduce the local station signal, during this operation, by shortening antenna lead or grounding antenna "A" terminal to chassis in order to increase the loudness of the beat note sufficiently for accurate zero-beat adjustment.

Throw "Manual-Electric-Remote" switch to "Electric" (center) position. A high whistle or beat note will now be heard. Turn the magnetite core screw L28 (top of 4th i-f transformer) slowly clockwise. As this screw is turned, the beat note will first increase to a high audio frequency and will then decrease to a **zero-beat** and then increase in frequency again. The point of exact **zero-beat** is the position for correct adjustment of the discriminator. Zero-beat should also still exist when the "Manual-Electric-Remote" switch is thrown back to "Manual" position. The adjustment is now complete and may be checked by slightly detuning the receiver above and below the local station frequency with the "Manual-Electric-Remote" in "Manual" position, switching to "Electric" position, and noting the oscillator pull-in. Replace spring "N."

† The No. 150 Test Oscillator employs a fixed-frequency (800 kc), modulated oscillator and a variable, unmodulated oscillator. The scale is calibrated to the sum frequency for the two higher frequency ranges and to the difference frequency for the four lower frequency ranges.

Circuit Arrangement

The circuit consists of an r-f amplifier stage; first-detector (converter) stage; separate heterodyne-oscillator stage; oscillator-control stage; two i-f amplifier stages; diode detector, automatic-frequency and volume-control stage; audio voltage-amplifier stage; audio-driver stage; push-pull power-amplifier stage; tuning indicator "Magic Eye"; and a full-wave rectifier.

The antenna and first-detector coils are constructed with a special type of winding ("qumulative") to provide increased seusitivity and selectivity on the "Standard Broadcast" band. Special capacitors shunting the spread-band oscillator coils change in capacity with temperature variations to reduce oscillator frequency drift.

Spread-band tuning is accomplished electrically by shunting the low-capacity section of the oscillator variable capacitor with relatively large temperature-stabilized fixed capacitors for tuning the oscillator coil on the "19M," "25M," "31M," and "49M" bands. Antenna and first-detector coils are designed to be sufficiently broad-tuned to require no variable tuning over the narrow frequency range of the spread-bands.

The spread-band oscillator coils and the "Standard Broadcast" band oscillator, first-detector, and antenna coils are all wound on separate forms. The antenna and first-detector spread-band coils are tapped. Undesirable interaction between coils is avoided by shorting proper unused sections by means of the range selector.

The intermediate-frequency amplifier consists of two RCA-6K7 tubes in a two-stage transformer-coupled circuit. The windings of all i-f transformers are resonated by fixed capacitors and are adjusted by molded magnetite cores to tune to 460 kc. A third winding, L22, in the first i-f transformer, closely coupled to the primary, L20, is placed in series with the main secondary, L21, when the fidelity control switch S11 is thrown to "broad" position (see figure 1), thereby increasing the coupling between the primary and secondary circuits with a consequent broadening of the band width of the i-f amplifier, permitting higher fidelity reception.

The function of the automatic-frequency-control circuit is to automatically change the frequency of the heterodyne oscillator so that the correct i-f frequency is formed for the i-f amplifier. The circuit consists essentially of an i-f discriminator which, as the name implies, discriminates or furnishes control voltage of the correct polarity to an oscillator frequency-control tube for generated i-f carrier frequencies slightly above and below 460 kc, or the frequency to which the i-f amplifier is tuned.

The plate circuit of the RCA-6J7 oscillator-control tube is caused to act as an apparent variable inductance in parallel with the "A" band oscillator tuned circuit of which coil L35 is a part. The series **combination** of resistor R5 and the capacitor C16 is also in parallel with the oscillator tuned circuit. Since the resistance of R5 is many times greater than the reactance of C16, at the oscillator frequency, the r-f current through the combination will be practically in phase with the r-f voltage across the oscillator tuned circuit. However, the r-f voltage impressed across the C16 capacitance section of the combination, or from grid to cathode, will lag the r-f voltage across the combination, or the tuned circuit, approximately 90 degrees. The grid-cathode r-f voltage will be amplified by the control tube but will be shifted an additional 180 degrees (grid and plate voltages of all tubes are always opposite in phase) so that the amplified r-f voltage appearing across the plate circuit will now lead the voltage across the combination or the tuned circuit by 90 degrees, or, in other words, the control tube is acting as an equivalent shunt inductance. The amount of this action is determined by the amplification of the tube which, in turn, is governed by the grid-cathode bias voltage. In operation, a residual bias is developed across the cathode resistor R6. The d-c control-grid voltage is fed to the control grid from the discriminator circuit through resistor R7. If this voltage is negative with respect to ground, the amplification of the control tube will be decreased, the apparent plate-circuit inductance of the tube increased, which will lower the frequency of the oscillator tube. The converse will occur when the grid voltage is positive with respect to ground.

The action of the discriminator circuit depends upon the fact that a 90-degree phase difference exists between the primary and secondary potentials of a double-tuned loosely-coupled transformer when the resonant frequency is applied, and that this phase difference varies as the applied frequency varies, i.e., the maximum resultant response voltage across the primary and secondary windings connected in series will occur at a frequency either lower or higher in frequency than the frequency to which the individual windings are resonated, respectively, depending on whether the windings are connected series aiding or opposing.

The discriminator, or fourth i-f transformer, consists of the primary winding, L30, which is a part of the third i-f transformer secondary tuned circuit (tuned to 460 kc) and the center-tapped secondary, L29. The upper and lower halves of L29 may be considered as two secondary coils, the upper series aiding and the lower series opposing the primary, L30. The magnetite core in L29 is inserted to inductively balance the two halves. The function of coil L28 (magnetite core adjusted), in parallel with L29, is to tune the secondary to 460 kc. Therefore, the maximum voltage will be applied to diode circuit P_1K_1 and R18 when the i-f signal frequency is below 460 kc and to the diode circuit P_2K_2 and R17 when the i-f signal frequency is above 460 kc. Resistors R17 and R18 are connected in series between ground and a point leading to the oscillator control-tube grid.

D-c voltages, resulting from diode rectification, across R17 and R18 are always in opposition, consequently the oscillator control-tube grid-bias voltage is a differential amount, depending upon the i-f signal strength and its frequency deviation from the nominal value of 460 kc. The polarity of this differential oscillator control-tube grid-bias, with respect to ground, depends on whether the i-f signal frequency is above or below 460 kc, but is always in the direction which will bring the generated i-f frequency nearer to 460 kc. A-f-c action is automatically eliminated for "manual" tuning by grounding diode cathode K_1 through switch S9.

Service Data

The various diagrams of this booklet contain such information as will be needed to isolate causes for defective operation if such develops. The ratings of the resistors, capacitors, coils, etc., are indicated adjacent to the symbols signifying these parts on the diagrams. Identification titles such as R1, L1, C1, etc., provide reference between the illustrations and Replacement Parts List. The coils, transformer windings, and reactors are rated in terms of d-c resistance to permit continuity checks.

Precautionary Lead Dress.—(1) Green bus leads from C1 to S1 and from C59 to S2 should be dressed away from nearby parts. (2) Green bus lead from C13 to S3 should be 2¾-inches long and dressed away from nearby parts. (3) Bus leads from C12 to L18 and from L18 to S3 should be as short as possible. (4) Red and blue leads from tube No. 3 to 19M. oscillator coil should be dressed away from coil. (5) Tube No. 3 grid lead should be 6-inches long and dressed away from grounded metal parts. (6) All leads behind oscillator coils should be dressed close to chassis. (7) "Magic Eye" cable should be clamped to dial bracket. (8) Filament leads should all be twisted. (9) Leads from C44 and C48 should be dressed close to chassis. (10) A-c leads near R22 should be dressed away from R22. (11) Leads from S11 to the first i-f transformer should be twisted and dressed away from chassis. (12) Capacitors C7, C8, and C9 should be dressed perpendicular to chassis and away from each other and grounded metal parts. (13) Motor-cable leads should be dressed away from pinion gear. (14) Blue bus lead from "A" detector coil to "P" of tube No. 1 should be dressed centrally between band-switch shield and air trimmer C20. The following should be dressed away from the chassis: (15) Yellow bus lead from "K" of tube No. 3 to S3. (16) Yellow bus lead from "OG" of tube No. 2. (17) Blue bus lead from C47 to R26.

Phonograph Attachment.—A terminal board is provided for connecting a phonograph into the audio-amplifying circuit. RCA Victor Models R-93, R-93-A, R-93-2, or R-94 Record Players should be connected as follows: Remove the link from the phonograph terminal board. Connect green wire in Radio-Record switch cable to terminal 1; yellow to terminal 2; shield to terminal 3; and tape up the red and blue. Connect a 2-conductor twisted cable between the Record Player binding posts and the screw-terminals on Radio-Record switch. If additional volume is desired, connect an RCA Stock No. 9632 transformer between the 2-conductor twisted cable and the screw-terminals on Radio-Record switch as follows: Yellow and brown transformer leads and one side of twisted cable to ground screw-terminal on switch; black transformer lead to other side of twisted cable; and blue transformer lead to other screw-terminal on switch.

Loudspeaker.—Two types of loudspeakers are used which will be referred to as types 1 and 2. In type 1 the cone centering diaphragm is cemented to a fixed ring, while in type 2 the centering diaphragm is cemented to an adjustable ring. Replacement of cone for either type is identical. Centering of cone for type 1 loudspeaker is made with three narrow celluloid or paper feelers after first removing the front dust cover and cutting free the cone centering diaphragm. The dust cover may be removed by a light application of acetone, using care not to allow the acetone to flow into the air gap. The centering diaphragm should be cemented in place after placement of feelers. Sufficient time should be allowed for the ambroid to set before removing feelers. Use ambroid to replace dust cover. Centering of cone for type 2 loudspeaker differs only in that it is not necessary to cut free the centering-diaphragm, adjustment being made in the usual manner by means of screws on the adjustable cone centering ring.

©John F. Rider, Publisher

RCA MFG. CO., INC.

MODEL 813K
Tuner Data
Specifications

ELECTRIC TUNING

Principle of Operation

The electric tuning mechanism consists essentially of a quick engaging and dis-engaging reversible electric motor, tuning condenser driving gear train, and eight mechanically interlocked (pushing one button releases all others) station selector push buttons respectively wired to eight adjustable station selector contactor discs (each with a motor stopping insulated segment) mounted on a drum which is directcoupled to the gang tuning condenser shaft. The arrangement permits any one of eight pre-determined stations to be electrically tuned in by merely touching the correct push button. If all eight buttons are inadvertently locked in, firmly pushing the right-hand button will release them.

The operation may be more readily understood by reference to figures 1, 4, and 5. When the motor is not energized, the armature is pushed to the rear or slightly out of the magnetic center by tension of contact spring "C" and the motor shaft is dis-engaged from the driving gear train. Pressing in any one of the eight push buttons will complete the motor circuit through a station selector contactor disc, assuming that the "Manual-Electric-Remote" switch is in "Electric" position and that the insulated segment in the contactor disc is not opposite its contactor. As the motor starts, the armature will be drawn forward, due to solenoid action, and the pin "F" on the end of its shaft will engage the arm "G" on the small main pinion gear, thereby driving the tuning mechanism. At the same time contact springs "E" and "D" will be grounded, causing suppression of audio amplification and automatic frequency control during the tuning cycle. The motor will continue to operate until the insulated segment in the selector disc breaks the motor circuit, whereupon spring "C" will instantly dis-engage the motor pin "F" from the arm "G" on the small pinion driving gear and open contacts "E" and "D." Pushing another button will cause the above mentioned cycle to be repeated except that the motor will be interrupted by the insulated segment on a corresponding disc. The discs are individually adjustable on a drum mechanism, providing a choice of eight "Electric Tuned" "Broadcast" stations. The arrangement of the motor is such that its rotation will continue in the same direction regardless of the number of "Electric" tuning cycles until the tuning condenser approaches either full-out or full-in of mesh, whereupon lever "H" trips switch S7 which reverses the direction of rotation. A throw-out idler gear is linkcoupled to the "Manual-Electric-Remote" control to disconnect the motor drive gear train when the control is thrown to "Manual" position.

Mechanism Adjustments

The electric tuning mechanism is designed to be as simple in construction and as fool proof in operation as is possible. In order to maintain the accurate results possible with this device care must be taken in effecting any repairs or adjustments. Reference should be made to figure 4 and the following:

A-F-C and A-F Amplification Suppression Switches.—This switch assembly is located on the motor bracket and closes due to solenoid action of motor armature. The tension of the long contact spring "C" is important in bringing about quick dis-engagement of the motor and in permitting the motor to pull into mesh with the drive mechanism. Normal adjustment is attained when the short springs "D" and "E" are aligned exactly straight with contact points separated approximately 1/32 of an inch and with the spring "C" spaced approximately 7/32 of an inch from spring "D" at the point of contact. If necessary, in order to obtain positive pull-in and quick dis-engagement of the motor, the tension of spring "C" should be increased or decreased by bending. This action should be checked with the front apron of the chassis raised two inches higher than the rear. Contacts of the switch must be kept clean. Crocus cloth or a relay burnisher may be used for this purpose.

Motor Reversing Switch.—It is necessary to automatically stop and reverse the drive motor before the tuning condenser reaches the ends of its travel. Approximately 175 degrees of sweep is required, and the reversal must take place above 1,700 kc and below 540 kc but not too near the limits of the scale. The coupling between the station selector drum and the tuning condenser shaft should be attached so that the reversing switch trip lever "H" is exactly vertical when the condenser is full-out of mesh. There should be 1/32 of an inch clearance between the end of the condenser shaft and the selector drum shaft. While the trip lever is in this position the reversing switch bracket should be adjusted by means of its elongated mounting holes until the switch pin "I" just lightly touches trip lever "H."

Main Pinion Gear.—Clearance between the small high-speed pinion gear "E" and the intermediate gear "K" determines the amount of mechanical noise produced. Correct adjustment will give approximately 1/32 of an inch movement of back lash at the end of pinion arm "G" when gear "K" is held stationary. Arm "G" must also be adjusted for correct mesh with motor shaft drive pin "F." With the motor shaft completely forward and pinion "E" tight against its front bearing, the pinion mounting stud "J" should be adjusted so that pin "F" meshes full thickness with the rotating arm "G." An increase of this mesh will increase over travel on tuning while a decrease of mesh will decrease the over travel. The elongated hole in the front bracket allows sufficient movement of the mounting stud "J" to permit above mentioned gear mesh adjustment.

"Manual-Electric-Remote" Changeover. — (1) Link and arm adjustment—To properly line up the mechanical link between the switch shaft and throw-out gear bracket "MM," the set screws holding the link arm on the switch shaft must be loosened, the switch turned to the "Manual" position (extreme right) and the link lever revolved until the distance between the link-connecting pin (extends through chassis apron) and the right-hand (viewed from front) side of the slot, in front apron of chassis, is exactly 5/16 of an inch. If this adjustment is not properly made, correct operation of "Electric" or "Remote" tuning will not result. (2) Throw-out Gear Adjustment—To obtain smooth operation on "Electric" or "Remote" positions it is important that the proper clearance is maintained between the throw-out gear "M" and the intermediate gear "L." With the "Manual-Electric-Remote" control thrown to "Remote" position (extreme left) adjust the mesh between these gears by means of the eccentric screw "O" and lock nut "P," contacting the throw-out gear bracket "MM," until there is approximately 1/64 of an inch backlash of gear "L" when gear "M" is held stationary.

Vernier Tuning.—In case it becomes necessary to remove tuning condenser drive shaft "T," it should be replaced by sliding anti-backlash gear "R" on condenser shaft apart so that compression amounting to one tooth on the gear is obtained in the springs. Adjust mesh of gear "R" with pinion gear "U" on vernier shaft before tightening screws "S" so that smooth tuning is obtained throughout the range.

Motor Alignment. — The motor shaft must be exactly aligned with the axis of the pinion gear with which it engages. This may be adjusted by loosening the mounting screws "V" of the motor and aligning shaft by sight. Correct alignment may be tested by slowly rotating motor and observing the relation between the pin "F" of the motor shaft and the arm "G" on the pinion. The relation of the two should remain the same throughout the revolution. Additional movement for adjustment may be obtained by the motor bracket screws "W" if necessary.

Station Selector Drum.—(1) Bearing Adjustment—The selector drum may be removed by unscrewing the two bearing adjusting screws "X" on the front and rear bearings and sliding shaft out of slots on frame. To replace drum, the reverse procedure should be followed holding bearing adjusting plates "Y" firmly against the shaft and tightening adjusting screws. (2) Contact adjustment—Two types of contact strips are used. They are designated on figure 4, as types 1 and 2, on which the individual contacts are respectively adjustable and fixed. On type 1, the individual contacts should be adjusted by setting the end contact springs near the mid-position of their travel and aligning the remaining springs to them by means of a straight edge. Either type of contact strip should be adjusted to the selector drum by firmly placing two selector adjusting keys in the station adjustment strip, positions 1 and 8 (locking respective discs), loosening contact strip adjusting nuts "Z" and shifting the contact strip until the end contacts are exactly centered on the respective disc insulating segments. More accurate adjustment may be made by silhouetting the point of contact with a piece of white paper held behind the contact. Adjustment will be facilitated by removing complete assembly from rear of tuning condenser by unscrewing the three mounting screws. Contacts and discs must be kept free of dirt, filings, and other extraneous matter.

Lubrication. — The dial pointer slide should be greased with petrolatum. This same lubrication should be applied lightly to all gear faces of the drive mechanism and sparingly with a cloth to the station selector discs. Any good household oil, such as "3-IN-ONE," is suitable for the motor shaft bearings. A light grade of engine oil should be used for all gear bearings. Medium viscosity engine oil, similar to "PYROIL" (B), should be applied between the thrust washers on the motor shaft. "CASTORDAG," a mixture of graphite and castor oil, is recommended for use at the selector drum end-bearing slots and at the bearings of cable pulleys.

Station Adjustment

Any eight stations may be chosen for "Electric" tuning. Remove the two escutcheon plates from the side of the dial, place proper call letter labels in the celluloid windows, and replace escutcheons. Turn the power on and proceed to set up the "Electric" tuning as follows:

1. Set Range Selector to "Standard Broadcast."
2. Turn "Manual-Electric-Remote" control to "Electric."
3. Turn Fidelity control counter-clockwise.
4. Press push button No. 1 (left) and wait until station pointer comes to rest.
5. Turn the "Manual - Electric - Remote" control to "Manual."
6. Remove adjusting key from receptacle on top of station selector drum mechanism.
7. Insert key in position marked "1" in station adjustment strip and push the key all the way down to properly fit in slot in disc.
8. Tune the receiver very carefully by means of the manual tuning knob and the "Magic Eye," to station chosen for No. 1.
9. Remove key.
10. Turn the "Manual-Electric-Remote" control to "Electric."

Button No. 1 is now properly set for "Electric" tuning. Proceed similarly for the other seven push buttons, matching each station on the dial with the same number on the station adjustment strip. Repeat the above steps but place the key respectively in positions 2, 3, 4, etc., and in each case tune to the proper station. Pressing the proper button will now cause the desired station to be tuned in electrically.

Armchair Control

When a Model G-8 armchair control is attached to the receiver as shown in figure 5 it duplicates the action of the push buttons on the front panel when the "Manual-Electric-Remote" control is turned to "Remote" position.

Service Hints

a. Capacitor C18 should be carefully checked for leakage or short circuit in cases of intermittent operation or no operation. R9 should be shorted out and C18 replaced by Stock No. 4839, as shown by the Schematic Circuit Diagram figure 1, in the event of trouble in this circuit.

b. Capacitor C5 should be checked for leakage or short circuit.

c. Resistor R5 was 33,000 ohms in some instruments. Replace with Stock No. 12333.

d. Capacitor C16 was .82 mmfd. in some instruments. Replace with Stock No. 14021.

e. Capacitor C38 was two 0.5 mfd. in parallel on some instruments. Replace with Stock No. 30623.

Mechanical Specifications

Height	43 inches
Width	28⅝ inches
Depth	16⅝ inches
Weight (net)	108 pounds
Weight (shipping)	153 pounds
Chassis Base Dimensions	22⅛ inches x 12⅛ inches x 4½ inches
Over-all Chassis Height	12⅞ inches
Operating Controls	(1) Power Switch– –Low Tone, (2) Volume, (3) Tuning, (4) Range Selector, (5) Manual-Electric-Remote, (6) Fidelity
Tuning Drive Ratios (manual)	10 to 1 and 50 to 1

Trademarks "Radiotron," "Magic Eye," "Magic Voice," "Magic Brain" Reg. U.S. Pat. Off. by RCA Mfg. Co., Inc.

Copyright, 1937, RCA Manufacturing Co., Inc.

Radiotron Complement		
(1) RCA-6K7	R-F Amplifier	
(2) RCA-6L7	First Detector	
(3) RCA-6J7	Heterodyne Oscillator	
(4) RCA-6J7	Oscillator Control	
(5) RCA-6K7	First I-F Amplifier	
(6) RCA-6K7	Second I-F Amplifier	
(7) RCA-6H6	Second Detector, A.V.C., and A.F.C.	
(8) RCA-6C5	First Audio Amplifier	
(9) RCA-6F6	Audio Driver	
(10) RCA-6F6	Power Output	
(11) RCA-6F6	Power Output	
(12) RCA-6G5	"Magic Eye" Tuning Tube	
(13) RCA-5T4	Full-Wave Rectifier	
Pilot Lamps (9)	Mazda No. 46, 6.3 volts, 0.25 amp.	
Power Supply Ratings		
Rating A	105-125 volts, 50-60 cycles, 150 watts	
Rating B	105-125 volts, 25 cycles, 150 watts	
Rating C	100-130/140-160/195-230 volts, 50-60 cycles, 150 watts	
Loudspeaker		
Type	12-inch Electrodynamic	
Impedance (v.c.)	11.5 ohms at 400 cycles	
Power Output		
Undistorted	15 watts	
Maximum	20 watts	

©John F. Rider, Publisher

MODEL 813K
MODEL 816K
Tuner Mechanism
Adjustments

RCA MFG. CO., INC.

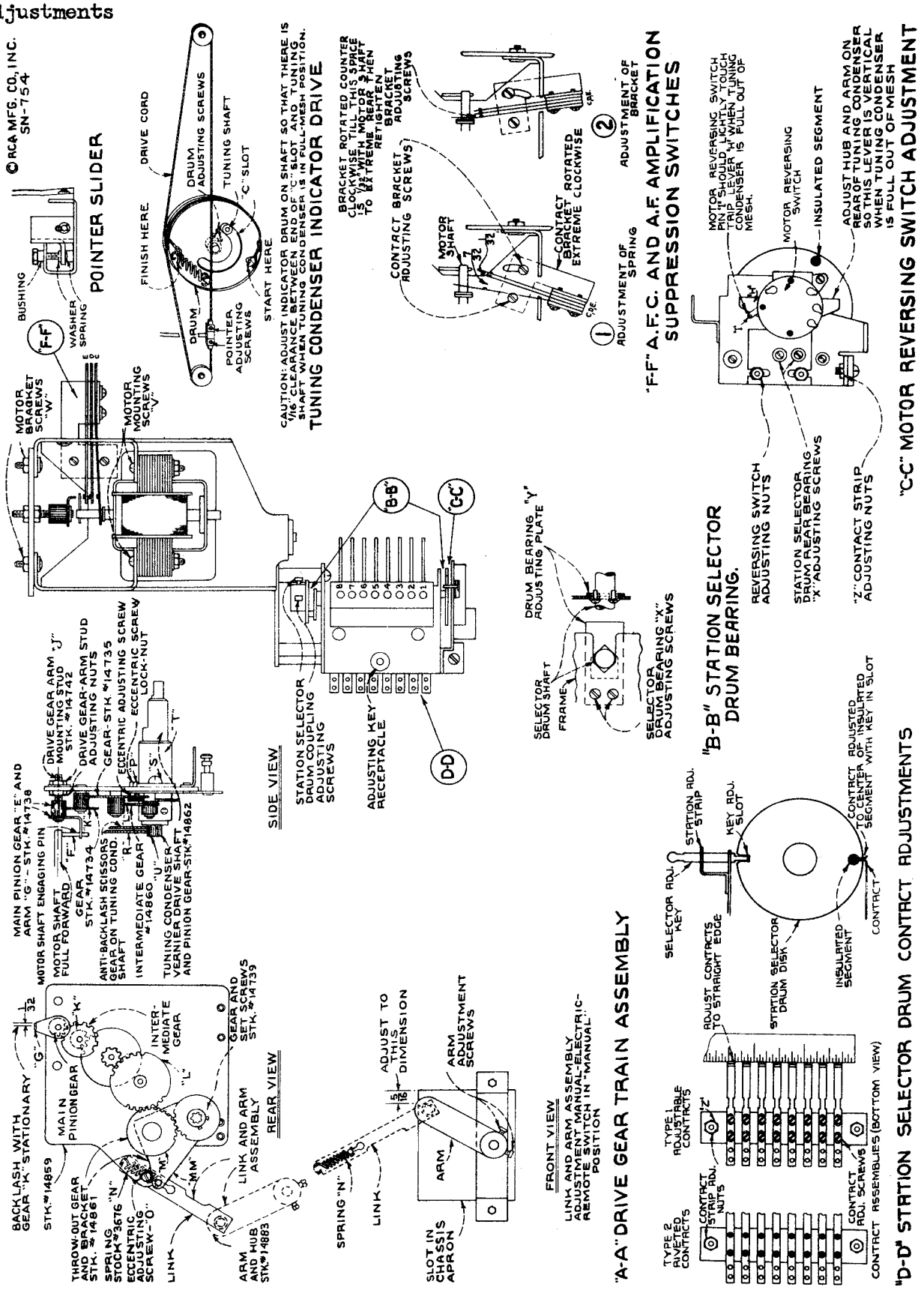

Figure 4—"Electric Tuning" Mechanism Adjustments

©John F. Rider, Publisher

©John F. Rider, Publisher

STOCK No.	DESCRIPTION
14911	Capacitor—580 Mmfd. (C11)
12897	Capacitor—4700 Mmfd. (C5)
13033	Capacitor—.007 Mfd. (C49, C51)
4937	Capacitor—.01 Mfd. (C50)
13138	Capacitor—.01 Mfd. (C17, C24, C27, C39, C46)
11315	Capacitor—.015 Mfd. (C47)
4870	Capacitor—.025 Mfd. (C42)
4886	Capacitor—.05 Mfd. (C30, C61)
4839	Capacitor—0.1 Mfd. (C4, C18, C26, C37, C60)
5170	Capacitor—0.25 Mfd. (C25)
30623	Capacitor—1 Mfd. (C38)
5212	Capacitor—16 Mfd. (C55)
14377	Capacitor—16 Mfd. (C57)
13611	Capacitor—20 Mfd. (C56)
14531	Capacitor—25 Mfd. (C53, C54)
30017	Capacitor Pack—Compensating capacitor pack comprising one .025 Mfd. and one .015 Mfd. capacitor, one 22,000 ohm and one 27,000 ohm resistor (C41, C43, R21, R23)
14902	Capacitor Pack—Comprising two sections 10 mfd. each (C44, C48)
14865	Coil—"A" band antenna coil (L6, L7)
14866	Coil—Special band spread antenna coil (L1, L2, L3, L4, L5)
14867	Coil—"A" band detector coil (L12, L13)
14868	Coil—Special band spread detector coil (L8, L9, L10, L11)
14869	Coil—"A" band oscillator coil (L19, L35)
14873	Coil—19 meter band oscillator coil (L14, L15)
14872	Coil—25 meter band oscillator coil (L16)
14871	Coil—31 meter band oscillator coil (L17)
14870	Coil—49 meter band oscillator coil (L18)
14858	Condenser—3 gang variable tuning condenser complete with gear train (C1, C12, C13, C59)
5040	Connector—4 contact female connector for reproducer cable
30567	Connector—4 contact female connector with metal shell for reproducer cable in later production
14733	Contact—Spring contact for engaging discs in station selector drum for type 1 contact assembly
30365	Contact—Comprising 8 spring contacts assembled on insulating strip for engaging discs in station selector drum (type 2 contact assembly)
14857	Cord—Indicator drive cord
12006	Core—Adjustable core and stud for I-F transformers
14890	Cushion—Black rubber dial cushion
14888	Dial—Dial assembly, ready to mount on support brackets. Includes 7 glass dial strips and indicator slider assembled on metal frame
14862	Drive—Tuning condenser vernier drive shaft and pinion gear
14856	Drum—Drive cord drum complete with set screws
14731	Drum—Station selector drum rotor—comprising 8 station selector contactor discs assembled on shaft
14738	Gear—Drive pinion gear and arm
14739	Gear—Drive gear and set screws—located on tuning condenser knob shaft
14734	Gear—Intermediate gear assembly—comprising one .749-in. O.D., 34 tooth gear and one .291-in. O.D., 12 tooth pinion assembled
14735	Gear — Intermediate gear assembly — comprising one 1.541-in. O.D., 72 tooth gear and one .291-in. O.D., 12 tooth pinion assembled
14860	Gear — Intermediate gear assembly — comprising one 1.541-in. O.D., 72 tooth gear and hub assembled
14861	Gear—Throwout gear and bracket
14900	Indicator—Station selector indicator pointer
5226	Lamp—Dial Lamp
14729	Motor—Tuning drive motor for 60 cycle models only (M-1)
14730	Motor—Tuning drive motor for 25 cycle models only (M-1)
14859	Plate—Tuning condenser front plate and studs assembled for mounting drive gears
12471	Plate—6J7 socket mounting plate assembly for cushion socket—less socket
14886	Pulley—Indicator drive cord pulley—located on right or left hand dial bracket
14854	Reactor—Filter reactor (L33)
30647	Resistor—1.8 ohms, Resisto-fuse, 1 amp. (R42)
13250	Resistor—330 ohms, carbon type, ½ watt (R15)
30158	Resistor—820 ohms, carbon type, ½ watt (R30)
5112	Resistor—1000 ohms, carbon type, ½ watt (R10)
13030	Resistor—1000 ohms, carbon type 1/10 watt (R2, R13)
11283	Resistor—1200 ohms, carbon type, ½ watt (R41)
13031	Resistor—3300 ohms, carbon type, 1/10 watt (R29)
5114	Resistor—15,000 ohms, carbon type, 1 watt (R31)
14078	Resistor—18,000 ohms, carbon type, 1 watt (R24)
14284	Resistor—22,000 ohms, carbon type, 1/10 watt (R36)
12454	Resistor—33,000 ohms, insulated, ½ watt (R4, R12)
12333	Resistor—68,000 ohms, carbon type, ½ watt (R5)
5145	Resistor—100,000 ohms, carbon type, ½ watt (R14, R28)
11452	Resistor—470,000 ohms, carbon type, 1/10 watt (R17, R18)
11172	Resistor—470,000 ohms, carbon type, ½ watt (R8)
11397	Resistor—560,000 ohms, carbon type, 1/10 watt (R1, R11, R27)
12013	Resistor—1 Megohm, carbon type, 1/10 watt (R25)
3033	Resistor—1 Megohm, carbon type, ½ watt (R7)
11151	Resistor—2.2 Megohm, carbon type, ½ watt (R20)
5131	Resistor—2.2 Megohm, carbon type, 1/10 watt (R19)
13673	Resistor—10 Megohm, carbon type, ½ watt (R40)
14875	Resistor—Voltage divider comprising one 1600 ohm, one 4500 ohm, one 7,000 ohm, one 300 ohm and two 85 ohm sections (R6, R33, R34, R35, R38, R39)
14887	Retainer—Indicator drive cord pulley retainer
14897	Scale—19 meter glass dial strip
14896	Scale—25 meter glass dial strip
14894	Scale—31 meter glass dial strip
14893	Scale—49 meter glass dial strip
30012	Scale—"A" band glass dial strip
4669	Screw—No. 8-32x5/32 square head set screw for drum Stock No. 14856, arm Stock No. 14726 and Stock No. 14883
12418	Screw—No. 8-32x3/16 milled head screw for gear Stock No. 14739
14848	Selector—Station selector drum mechanism—comprising selector contactor discs, spring contacts, and motor reversing switch assembled in metal frame
14882	Shield—Chassis bottom shield
12735	Shield—Dial lamp shield
12008	Shield—I-F transformer shield can
14901	Shield—Rubber shield for tuning tube
14892	Slide—Indicator pointer slider and spring assembly
11195	Socket—5 contact 5T4 Radiotron socket
11196	Socket—8 contact 6K7, 6J7, 6F6, 6H6, or 6C5, Radiotron socket
14877	Socket—8 contact 6J7 Radiotron impregnated socket for socket mounting plate Stock No. 12471 and 6K7 or 6L7 Radiotron
14114	Socket—Dial lamp socket
13638	Spring—Drive cord tension spring
12007	Spring—Retaining spring for core Stock No. 12006
3676	Spring—Tension spring for link and arm Stock No. 14883
14694	Spring—Tension spring for station selector push-button switch latch bar
14889	Strap—Strap and bolt assembly used to hold glass dial strips in position
14899	Strip—Bottom glass dial strip
14891	Strip—Finish strip used between glass dial strips
14898	Strip—Top glass dial strip
14742	Stud—Mounting stud for gear and arm Stock No. 14738
14874	Switch—"Manual-Electric-Remote" switch (S5, S9, S12)
14863	Switch—"Power-Tone" (Music-Speech) switch (S4, S8, S10)
14732	Switch—Motor reversing switch and mounting plate for station selector (S7)
14864	Switch—Range switch (S1, S2, S3)
14728	Switch—A-F-C and A-F amplification suppression switch (S13)
14904	Switch—Station selector switch parts comprising one 4 point contact board, one 4 point conductor plate, insulator and lockplate
14703	Tone control—"Fidelity" control (R26, S11)
14706	Transformer—First I-F transformer (L20, L21, L22, C22, C23)
14707	Transformer—Second I-F transformer (L23, L24, L25, C28, C29)
14708	Transformer—Third I-F transformer (L26, L27, C31, C32)
14709	Transformer—Fourth I-F transformer (L28, L29, L30, C35)
14855	Transformer—Driver transformer (T2)
14879	Transformer—Power transformer 105-125 volts, 50-60 cycle (T1)
14880	Transformer—Power transformer 105-125 volts, 25-60 cycle (T1)
14881	Transformer—Power transformer 100-130/140-160/195-250 volts, 50-60 cycle (T1)
12861	Volume Control (R22)
	REPRODUCER ASSEMBLIES (RL76-2)
14606	Cap—Dust cap for cone center
14922	Coil—Reproducer field coil (L34)
14602	Cone—Reproducer cone, voice coil, center suspension and dust cap (L32)
5039	Plug—4 contact male plug for reproducer
14920	Reproducer—Complete
14921	Transformer—Output transformer (T3, C52)
14357	Washer—Spring washer to hold field coil securely
	MISCELLANEOUS ASSEMBLIES
14745	Button—Station selector switch button
30361	Card—Call letter cards for station selector
5040	Connector—4-contact female connector for reproducer inter-connecting cable in later production
30568	Connector—4-contact male connector for reproducer inter-connecting cable in later production
14925	Crystal—Dial escutcheon crystal only
14923	Escutcheon—Dial and tuning tube escutcheon only—less crystal and buttons
14924	Escutcheon—Dial and tuning tube escutcheon and crystal complete
14926	Indicator—"Electric-Manual" indicating screen
14927	Indicator—"Music-Speech" indicating screen
14751	Key—Key for use in adjusting "Electric Tuning"
14359	Knob—"Tuning" (large) control knob
14688	Knob—"Range Selector" knob
14269	Knob—"Power-Tone" (Music-Speech), "Volume", "Tuning" (small), "Manual-Electric-Remote", and "Fidelity" control knobs
5210	Screw—Chassis mounting screw and washer assembly
14746	Shield—Celluloid shield for station markers
4982	Spring—Retaining spring for knob Stock No. 14359
14270	Spring—Retaining spring for knob Stock Nos. 14269 and 14688
	RECEIVER ASSEMBLIES
14726	Arm—Hub and arm complete with set screws—Connects station selector drum to rear of tuning condenser shaft
14883	Arm—Arm and hub assembly located on "Manual-Electric-Remote" switch shaft
14517	Board—Antenna and ground terminal board
12717	Board—Phonograph terminal board
14885	Bracket—Left hand dial bracket and pulley assembly
14884	Bracket—Right hand dial bracket and pulley assembly
14878	Bracket — Tuning tube mounting bracket and clamp assembly
5237	Bushing—Variable condenser rubber mounting bushing assembly
14919	Cable—5 conductor push-button selector cable
14918	Cable—7 conductor tuning drive motor and push-button selector cable
12607	Cap—First or second I-F transformer shield cap
12581	Cap—Third or fourth I-F transformer shield cap
11350	Cap—Grid contact cap
12884	Capacitor—Adjustable trimmer (long) (C3, C10, C15, C20)
14392	Capacitor—4.7 Mmfd. (C62)
14021	Capacitor—22 Mmfd. (C16)
12723	Capacitor—56 Mmfd. (C40)
12813	Capacitor—82 Mmfd. (C58)
14910	Capacitor—90 Mmfd. (C21)
14908	Capacitor—96.5 Mmfd. (C9)
14906	Capacitor—100 Mmfd. (C7)
12720	Capacitor—100 Mmfd. (C36)
14907	Capacitor—103.5 Mmfd. (C8)
14909	Capacitor—110 Mmfd. (C6)
12404	Capacitor—120 Mmfd. (C35)
14712	Capacitor—180 Mmfd. (C31, C32)
14711	Capacitor—220 Mmfd. (C28, C29)
12952	Capacitor—330 Mmfd. (C2, C19, C45)
14710	Capacitor—430 Mmfd. (C22, C23)
13052	Capacitor—470 Mmfd. (C14)
14724	Capacitor—560 Mmfd. (C63)

MODEL 816K
Parts List

RCA MFG. CO., INC.

STOCK No.	DESCRIPTION
	RECEIVER ASSEMBLIES
14726	Arm—Hub and arm complete with set screws—Connects station selector drum to rear of tuning condenser shaft
14883	Arm—Arm and hub assembly located on "Manual-Electric-Remote" switch shaft
14517	Board—Antenna and ground terminal board
12717	Board—Phonograph terminal board
14885	Bracket—Left hand dial bracket and pulley assembly
14884	Bracket—Right hand dial bracket and pulley assembly
14878	Bracket—Tuning tube mounting bracket and clamp assembly
5237	Bushing—Variable condenser rubber mounting bushing assembly
14919	Cable—5 conductor push-button selector cable
14918	Cable—7 conductor tuning drive motor and push-button selector cable
12607	Cap—First or second I-F transformer shield cap
12581	Cap—Third, fourth or fifth I-F transformer shield cap
11350	Cap—Grid contact cap
12884	Capacitor—Adjustable trimmer (long) (C3, C10, C15, C20, C65, C68)
14392	Capacitor—4.7 Mmfd. (C62)
13002	Capacitor—12 Mmfd. (C67)
30016	Capacitor—12 Mmfd. (C34)
12896	Capacitor—15 Mmfd. (C64)
30015	Capacitor—15 Mmfd. (C33)
14021	Capacitor—22 Mmfd. (C16)
12948	Capacitor—33 Mmfd. (C40)
14910	Capacitor—90 Mmfd. (C21)
14908	Capacitor—96.5 Mmfd. (C9)
14906	Capacitor—100 Mmfd. (C7)
12720	Capacitor—100 Mmfd. (C36, C58)
14960	Capacitor—100 Mmfd. (C73)
14907	Capacitor—103.5 Mmfd. (C8)
14909	Capacitor—110 Mmfd. (C6)
12404	Capacitor—120 Mmfd. (C35, C71, C72, C75)
14712	Capacitor—180 Mmfd. (C31, C32)
14711	Capacitor—220 Mmfd. (C28, C29)
12952	Capacitor—330 Mmfd. (C2, C19, C45)
14710	Capacitor—430 Mmfd. (C22, C23)
13052	Capacitor—470 Mmfd. (C14)
14911	Capacitor—580 Mmfd. (C11)
13140	Capacitor—1500 Mmfd. (C63)
30160	Capacitor—2700 Mmfd. (C66)
12897	Capacitor—4700 Mmfd. (C5)
4838	Capacitor—.005 Mfd. (C49, C51)
4937	Capacitor—.01 Mfd. (C50)
13138	Capacitor—.01 Mfd. (C17, C24, C27, C30, C39, C46, C69, C70)
11315	Capacitor—.015 Mfd. (C47)
4870	Capacitor—.025 Mfd. (C42)
4886	Capacitor—.05 Mfd. (C61)
4839	Capacitor—0.1 Mfd. (C4, C18, C25, C26, C37, C60)
12741	Capacitor—0.5 Mfd. (2 in parallel) (C38)
5212	Capacitor—16 Mfd. (C55)
14377	Capacitor—16 Mfd. (C57)
13611	Capacitor—20 Mfd. (C56)
14531	Capacitor—25 Mfd. (C53, C54)
30053	Capacitor Pack—Compensating capacitor pack comprising two .015 mfd. capacitors, one 27,000 ohm and one 33,000 ohm resistors (C41, C43, R21, R23)
14902	Capacitor Pack—Comprising two sections 10 mfd. each (C44, C48)
14948	Coil—"A" band antenna coil (L7, L8)
14949	Coil—"B" band antenna coil (L5, L6)
14950	Coil—"C" band antenna coil (L3, L4)
14951	Coil—Special band spread antenna coil (L1, L2)
14867	Coil—"A" band detector coil (L21, L22)
14952	Coil—"B" band detector coil (L20)
14953	Coil—"C" band detector coil (L19)
14954	Coil—Special band spread detector coil (L18)
14869	Coil—"A" band oscillator coil (L16, L17)
14955	Coil—"B" band oscillator coil (L15)
14956	Coil—"C" band oscillator coil (L14)
14873	Coil—19 meter band oscillator coil (L9, L10)
14872	Coil—25 meter band oscillator coil (L11)
14871	Coil—31 meter band oscillator coil (L12)
14957	Coil—49 meter band oscillator coil (L13)
14858	Condenser—3 gang variable tuning condenser complete with gear train (C1, C12, C13, C59)
5040	Connector—4 contact female connector for reproducer cable
14733	Contact—Spring contact for engaging discs in station selector drum for type 1 contact assembly
30365	Contact—Comprising 8 spring contacts assembled on insulating strip for engaging discs in station selector drum (type 2 contact assembly)
14857	Cord—Indicator drive cord
12006	Core—Adjustable core and stud for I-F transformers
14890	Cushion—Black rubber dial cushion
14862	Drive—Tuning condenser vernier drive shaft and pinion gear
14856	Drum—Drive cord drum complete with set screws
14731	Drum—Station selector drum rotor—comprising 8 station selector contactor discs assembled on shaft
10907	Fuse—3 Amp. (F1)
14738	Gear—Drive pinion gear and arm
14739	Gear—Drive gear and set screws—located on tuning condenser knob shaft
14734	Gear—Intermediate gear assembly—comprising one .749-in. O.D., 34 tooth gear and one .291-in. O.D., 12 tooth pinion assembled.
14735	Gear—Intermediate gear assembly—comprising one 1.541-in. O.D., 72 tooth gear and one .291-in. O.D., 12 tooth pinion assembled.
14860	Gear—Intermediate gear assembly—comprising one 1.541-in. O.D., 72 tooth gear and hub assembled
14861	Gear—Throwout gear and bracket
14900	Indicator—Station selector indicator pointer
5226	Lamp—Dial lamp
14729	Motor—Tuning drive motor for 60 cycle models only (M-1)
14730	Motor—Tuning drive motor for 25 cycle models only (M-1)
14859	Plate—Tuning condenser front plate and studs assembled for mounting drive gears
12471	Plate—6J7 socket mounting plate assembly for cushion socket—less socket
30557	Plug—Power cord plug less fuses Stock No. 10907
14886	Pulley—Indicator drive cord pulley—located on right or left hand dial bracket
14946	Reactor—Filter reactor (L37)
13250	Resistor—330 ohms, carbon type, ½ watt (R15)
11355	Resistor—390 ohms, carbon type, ½ watt (R6)
30158	Resistor—820 ohms, carbon type, ½ watt (R30)
11935	Resistor—1000 ohms, carbon type, 1/10 watt (R2, R13)
14720	Resistor—1000 ohms, carbon type, ½ watt (R10, R36)
14993	Resistor—1200 ohms, carbon type, 1/10 watt (R41)
13031	Resistor—3300 ohms, carbon type, 1/10 watt (R29)
5114	Resistor—15,000 ohms, carbon type, 1 watt (R31)
14078	Resistor—18,000 ohms, carbon type, 1 watt (R24)
14284	Resistor—22,000 ohms, carbon type, 1/10 watt (R37)
12454	Resistor—33,000 ohm, insulated, ½ watt (R4, R12)
12333	Resistor—68,000 ohms, carbon type, ½ watt (R5)
11365	Resistor—82,000 ohms, carbon type, ½ watt (R32)
5145	Resistor—100,000 ohms, carbon type, ½ watt (R14, R28)
11398	Resistor—220,000 ohms, carbon type, 1/10 watt (R40)
11452	Resistor—470,000 ohms, carbon type, 1/10 watt (R17, R18)
11172	Resistor—470,000 ohms, carbon type, ½ watt (R8)
11397	Resistor—560,000 ohms, carbon type, 1/10 watt (R1, R27)
5035	Resistor—560,000 ohms, carbon type, ½ watt (R11)
12013	Resistor—1 Megohm, carbon type, 1/10 watt (R25)
3033	Resistor—1 Megohm, carbon type, ½ watt (R7)
12200	Resistor—1 Megohm, insulated, ½ watt (R16)
12679	Resistor—2.2 Megohm, insulated, ½ watt (R19, R20)
14876	Resistor—Voltage divider comprising one 1450 ohm, one 5200 ohm, one 7700 ohm, one 18 ohm and one 82 ohm sections (R33, R34, R35, R38, R39)
14887	Retainer—Indicator drive cord pulley retainer
30014	Scale—19 meter glass dial strip
30013	Scale—25 meter glass dial strip
30011	Scale—31 meter glass dial strip
30010	Scale—49 meter glass dial strip
14962	Scale—"C" band glass dial strip
14961	Scale—"B" band glass dial strip
30285	Scale—"A" band glass dial strip
4669	Screw—No. 8-32x5/32 square head set screw for drum Stock No. 14856, arm Stock No. 14726 and Stock No. 14883
12418	Screw—No. 8-32x3/16 milled head screw for gear Stock No. 14739
14848	Selector—Station selector drum mechanism—comprising selector contactor disc's, spring contacts, and motor reversing switch assembled in metal frame
14882	Shield—Chassis bottom shield
12735	Shield—Dial lamp shield
12008	Shield—I-F transformer shield can
14901	Shield—Rubber shield for tuning tube
14892	Slide—Indicator pointer slider and spring assembly
11195	Socket—5 contact 5T4 Radiotron socket
11196	Socket—8 contact 6K7, 6L6, 6J7, 6F6, 6H6, or 6C5 Radiotron socket
14877	Socket—8 contact 6J7 Radiotron impregnated socket for socket mounting plate Stock No. 12471 and 6K7 or 6L7 Radiotron
14114	Socket—Dial lamp socket
13638	Spring—Drive cord tension spring
12007	Spring—Retaining spring for core Stock No. 12006
3676	Spring—Tension spring for link and arm Stock No. 14883
14694	Spring—Tension spring for station selector push-button switch latch bar
14889	Strap—Strap and bolt assembly used to hold glass dial strips in position
14891	Strip—Finish strip used between glass dial strips
14742	Stud—Mounting stud for gear and arm Stock No. 14738
14874	Switch—"Manual-Electric-Remote" switch (S6, S10, S13)
14863	Switch—L-F tone and power switch (S7, S9, S11)
14732	Switch—Motor reversing switch and mounting plate for station selector (S12)
14947	Switch—Range switch (S2, S3, S4)
14728	Switch—A-F-C and A-F amplification suppression switch (S8)
14904	Switch—Station selector switch parts comprising one 4 point contact board, one 4 point conductor plate, insulator and lockplate
14703	Tone control—H-F tone control (R26, S5)
14706	Transformer—First I-F transformer (L23, L24, L25, C22, C23)
14958	Transformer—Second I-F transformer (L26, L27, L28, C28, C29, C75, R16)
14708	Transformer—Third I-F transformer (L29, L30, C31, C32)
14709	Transformer—Fourth I-F transformer (L31, L32, L33, C35)
14959	Transformer—Fifth I-F transformer (L35, L36, C71, C72, C73, R37, R40)
14855	Transformer—Driver transformer (T2)
14944	Transformer—Power transformer 105-125 volts, 50-60 cycle (T1)
14945	Transformer—Power transformer 105-125 volts, 25-60 cycle (T1)
30156	Transformer—Power transformer 100-130/140-160/195-250 volts, 50-60 cycle (T1)
12861	Volume Control (R22)
	REPRODUCER ASSEMBLIES (RL76-3)
14606	Cap—Dust cap for cone center
14922	Coil—Reproducer field coil (L38)
14602	Cone—Reproducer cone, voice coil, center suspension and dust cap (L34)
5039	Plug—4 contact male plug for reproducer
30131	Reproducer—Complete
14992	Transformer—Output transformer (T3, C52)
14357	Washer—Spring washer to hold field coil securely
	MISCELLANEOUS ASSEMBLIES
14745	Button—Station selector switch button
30361	Card—Call letter cards for station selector
14925	Crystal—Dial escutcheon crystal only
14923	Escutcheon—Dial and tuning tube escutcheon only—less crystal and buttons

14924	Escutcheon—Dial and tuning tube escutcheon and crystal complete
14926	Indicator—"Electric-Manual" indicating screen
14927	Indicator—"Music-Speech" indicating screen
14751	Key—Key for use in adjusting "Electric Tuning"
14359	Knob—Large station selector knob
14688	Knob—Range switch knob
14269	Knob—Volume control, "Manual-Electric-Remote" switch, H-F tone control, L-F tone control or small station selector knob
5210	Screw—Chassis mounting screw and washer assembly
14748	Shield—Celluloid shield for station markers
4982	Spring—Retaining spring for knob Stock No. 14359
14270	Spring—Retaining spring for knob Stock Nos. 14269 and 14688

©John F. Rider, Publisher

RCA MFG. CO., INC.

MODEL 816K
Schematic

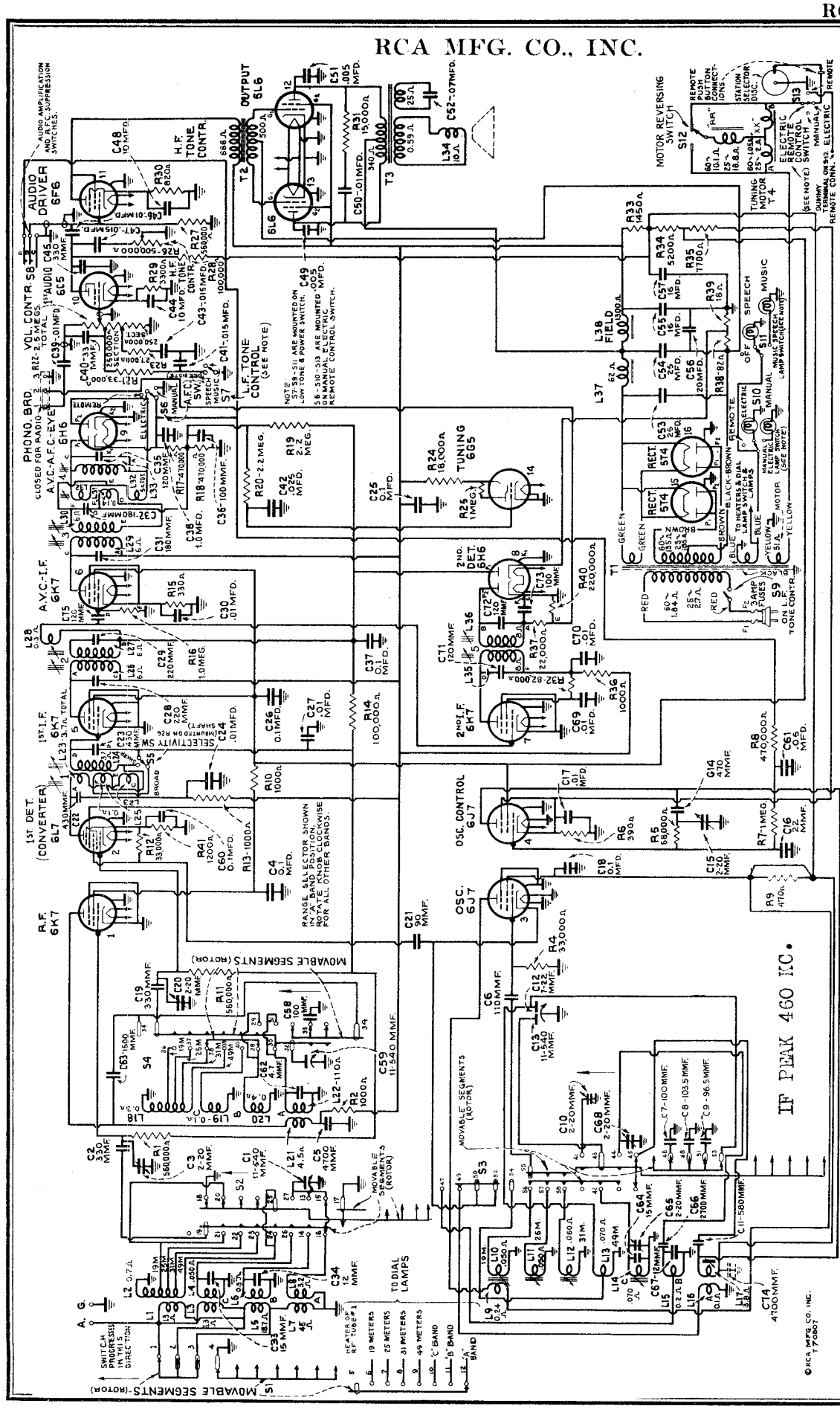

Figure 1—Schematic Circuit Diagram

This receiver employs a sixteen-tube, seven-band, "Magic Brain" superheterodyne circuit. Features of design include "Electric Tuning" with push-button operation; automatic frequency control; spread-band "Overseas" dial; "qumulative-wound" antenna and detector "A" band coils; tuned r-f amplifier; magnetite-core adjusted i-f transformers and low-frequency "A" and "C" oscillator tracking; two-stage signal i-f amplifier; parallel a-v-c., a-f-c., and "Magic Eye" r-f amplifier; phonograph terminal board; "Magic Eye" tuning tube; twelve-inch electrodynamic loudspeaker; plunger-type, air-dielectric trimming capacitors; temperature-stabilized capacitors; two-point aural-compensated volume control; "Fidelity" control; "Music-Speech" control; and a driven push-pull power output stage. In addition, this model has a cabinet incorporating the "Sonic Arc" Magic Voice.

©John F. Rider, Publisher

MODEL 816K
Chassis Wiring, Transformer

RCA MFG. CO., INC.

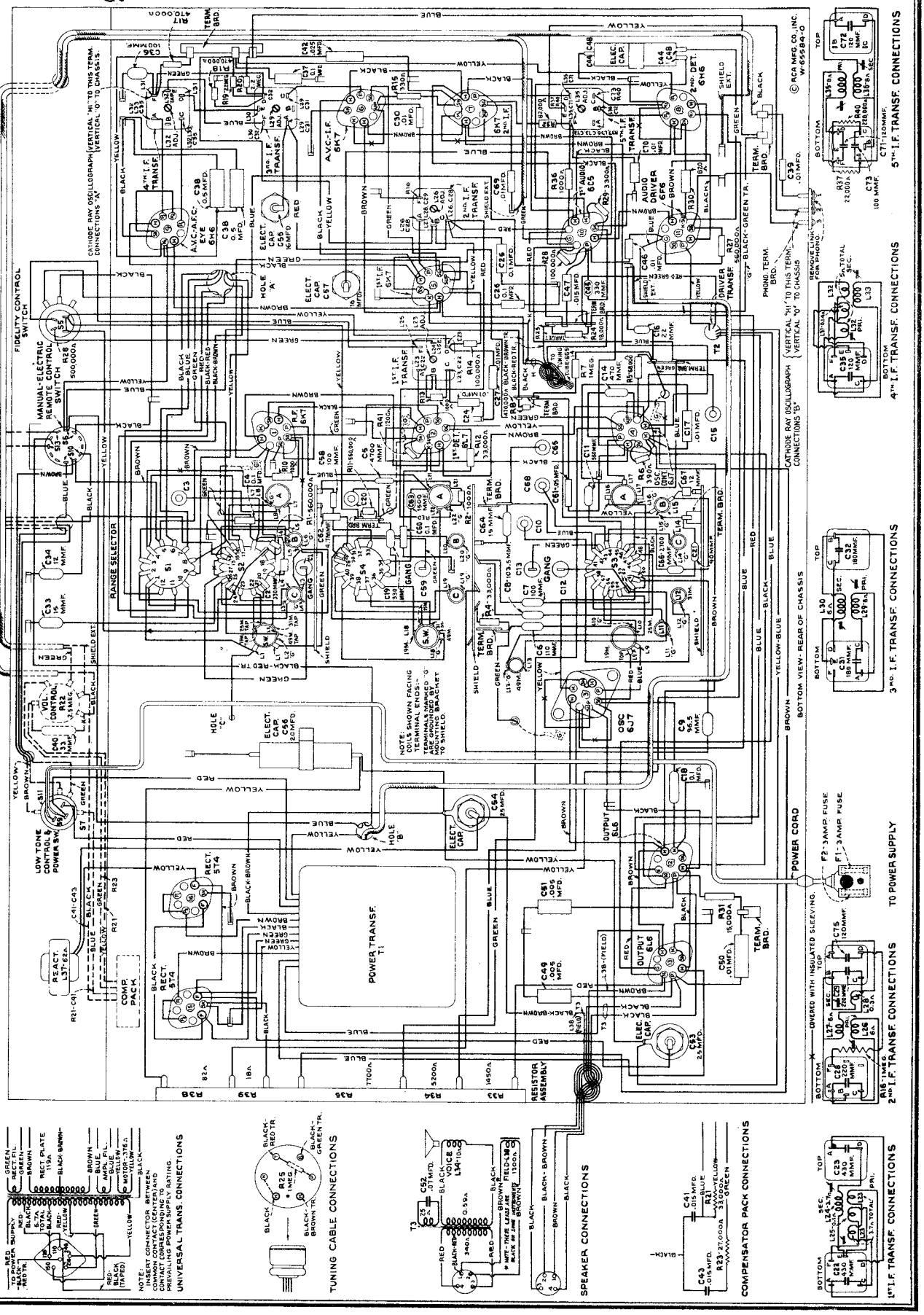

Figure 2—Chassis Wiring Diagram

©John F. Rider, Publisher

RCA MFG. CO., INC.

MODEL 816K
Socket, Trimmers
Voltage

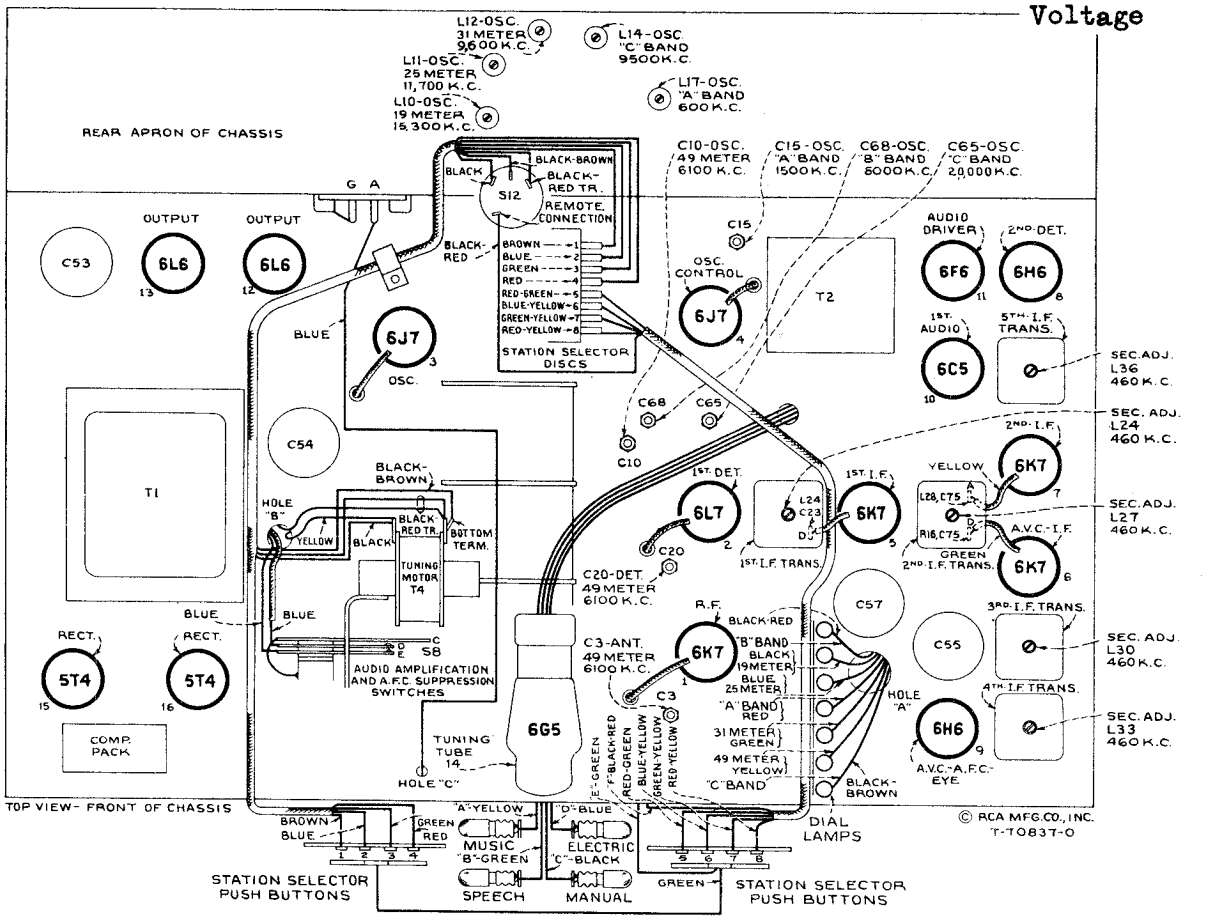

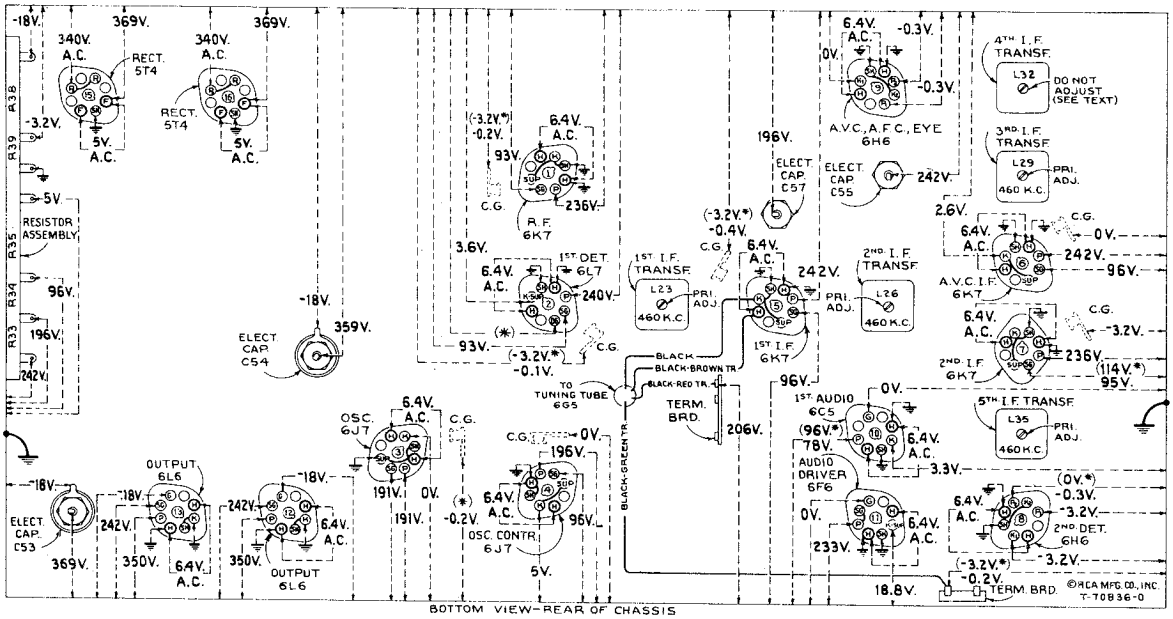

Figure 3—Radiotron, Coil, and Trimmer Locations

Figure 6—Radiotron Socket Voltages, Coil, and Trimmer Locations

Measured at 115 volts, 60-cycle supply—Tuned to approximately 1,000 kc ("Standard Broadcast")—"Manual" control—No signal being received—Volume control minimum—Fidelity control optional

Note: Two voltage values are shown for some readings. The value shown in parentheses with asterisk (*) indicates operating conditions without voltmeter loading. The other value (generally lower) is the actual measured voltage and differs from the value shown in parentheses because of the additional loading of the voltmeter.

Voltage values as specified should hold within ±20% when the receiver is normally operative at its rated line voltage. To duplicate the conditions under which the voltages were measured requires a 1,000-ohm-per-volt d-c meter, having ranges of 10, 50, 250 and 500 volts. Use the nearest range above the specified measured voltage. A-c voltages were measured with a corresponding a-c meter.

©John F. Rider, Publisher

MODEL 816K
"Electric Tuning" Wiring Specifications

RCA MFG. CO., INC.

Electrical Specifications

FREQUENCY RANGES

"Standard Broadcast" (A)	530-1,720 kc
"M.W." Medium Wave (B)	2,400-7,100 kc
"S.W." Short Wave (C)	7,100-21,750 kc
"49M." (49 Meters)	5,970-6,240 kc
"31M." (31 Meters)	9,410-9,690 kc
"25M." (25 Meters)	11,680-11,920 kc
"19M." (19 Meters)	15,090-15,380 kc

R-F ALIGNMENT FREQUENCIES

"49M." (49 Meters)	6,100 kc (osc., det., ant.)
"31M." (31 Meters)	9,600 kc (osc.)
"25M." (25 Meters)	11,700 kc (osc.)
"19M." (19 Meters)	15,300 kc (osc.)
"S.W." Short Wave (C)	9,500 kc (osc.), 20,000 kc (osc.)
"M.W." Medium Wave (B)	6,000 kc (osc.)
"Standard Broadcast" (A)	600 kc (osc.), 1,500 kc (osc.)

Intermediate Frequency ..... 460 kc

RADIOTRON COMPLEMENT

(1) RCA-6K7	R-F Amplifier
(2) RCA-6L7	First Detector
(3) RCA-6J7	Heterodyne Oscillator
(4) RCA-6J7	Oscillator Control
(5) RCA-6K7	First I-F Amplifier
(6) RCA-6K7	A-V-C, A-F-C, and Eye I-F Amplifier
(7) RCA-6K7	Second I-F Amplifier
(8) RCA-6H6	Second Detector
(9) RCA-6H6	A.V.C., A.F.C., and Eye
(10) RCA-6C5	First Audio Amplifier
(11) RCA-6F6	Audio Driver
(12) RCA-6L6	Power Output
(13) RCA-6L6	Power Output
(14) RCA-6G5	"Magic Eye" Tuning Tube
(15) RCA-5T4	Half-wave Rectifier
(16) RCA-5T4	Half-wave Rectifier

Pilot Lamps (11) ..... Mazda No. 46, 6.3 volts, 0.25 amp.

POWER SUPPLY RATINGS

Rating A	105-125 volts, 50-60 cycles, 200 watts
Rating B	105-125 volts, 25 cycles, 200 watts
Rating C	100-130/140-160/195-250 volts, 50-60 cycles, 200 watts

POWER OUTPUT

Undistorted	25 watts
Maximum	30 watts

LOUDSPEAKER

Type	12-inch Electrodynamic
Impedance (v.c.)	11.5 ohms at 400 cycles

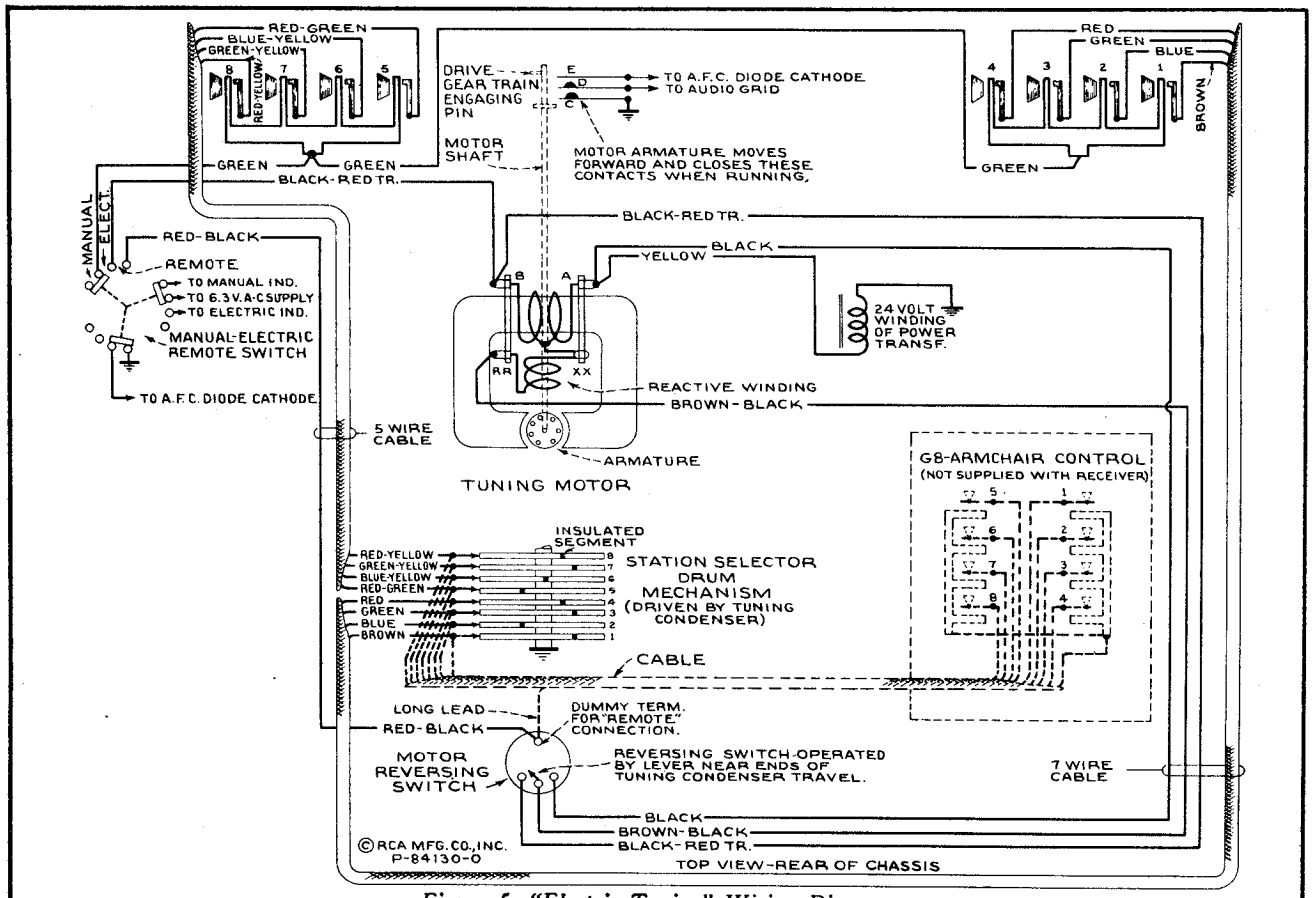

Figure 5—"Electric Tuning" Wiring Diagram (Viewed from rear of chassis)

Copyright, 1937, RCA Manufacturing Co., Inc.

Trademarks "Radiotron," "Magic Eye," "Magic Voice," "Magic Brain" Reg. U. S. Pat. Off. by RCA Mfg. Co., Inc.

©John F. Rider, Publisher

©John F. Rider, Publisher

Alignment Procedure

Calibrate the tuning dial by adjusting dial pointer to the left ends of horizontal calibration lines with the gang tuning-condenser plates in full-mesh position. This is a screw-driver adjustment.

The "Fidelity" control should be turned counter-clockwise during all alignment operations. The "Manual-Electric-Remote" switch should be turned to "Manual" (clockwise) during alignment unless otherwise specified. The bottom shield pan must be in place during spread-band alignment. Permit the set to operate at least five minutes before attempting alignment.

CAUTION.—The magnetite core screw L32 on the bottom of the 4th i-f transformer has been accurately adjusted, for an exact electrical balance of coil L32 to center tap, during manufacture and **should not be disturbed.** However, if for any reason the adjustment has been moved from its original position, it will be necessary to mechanically adjust this screw until the end of the stud protrudes exactly ⅛ of an inch (four threads exposed) above the brass bushing prior to any alignment operations.

Perform alignment in proper order, tabulated below, starting with No. 1 and following all operations across, then No. 2, etc. A-f-c discriminator adjustments should follow r-f and i-f adjustments tabulated below. Adjustment locations are shown on figures 3 and 6.

Cathode-ray alignment is preferable; the connections to the chassis are shown on figure 2. Cathode-ray connection "A" is used for adjustment of i-f transformers Nos. 1, 2, and 3 and connection "B" for adjustment of i-f transformer No. 5. If an output indicator is used, connect it across the loudspeaker voice-coil and advance the receiver volume control to full-volume position. The Magic Eye may be used as an output indicator for all adjustments except L35 and L36. It is preferable to replace the 6G5 tuning tube with a 6E5 during alignment.

Connect the "low" output terminal of the test oscillator to the receiver chassis for all alignment operations. Regulate the output of the test oscillator so that minimum signal is applied to the receiver to obtain an observable output indication. This will avoid a-v-c action and reduce possibility of error in spread-band adjustments.

The term "Dummy antenna" means the device which must be connected between the "high" test-oscillator output and the point of connection to the receiver in order to obtain ideal alignment. "No signal. 550-750 kc" means that the receiver should be tuned to a point between 550 and 750 kc where no signal or interference is received from a station or local (heterodyne) oscillator. "Min. Eye" means minimum width of dark sector of Magic Eye.

For further details on alignment, refer to booklet "RCA Victor Receiver Alignment."

Spread-band Adjustments.—Alignment of the spread ("Overseas") bands requires special procedure since test oscillators used alone are not ordinarily sufficiently accurate for this purpose. The RCA Stock No. 9572 Crystal Calibrator affords a convenient and accurate alignment standard. Wrap a few turns of wire around the crystal calibrator and connect one free end to the antenna terminal of the receiver. Snap crystal calibrator "Hi-Lo" switch to "Hi" (1,000 kc), turn the range selector to "49M." band, and set receiver dial pointer to 6.0 mc. Adjust oscillator trimming capacitor C10 for minimum "Magic Eye" opening (Min. Eye). Use the peak indicated by the alignment table. Snap "Hi-Lo" switch to "Lo" (100 kc) and locate 6,100 kc (the first 100 kc harmonic above 6,000 kc) by slightly readjusting C10 with the dial pointer set at 6.1 mc. This method insures selection of correct crystal calibrator harmonic. Adjust 1st detector and antenna trimming capacitors, C20 and C3, for maximum output.

Follow the tabulated alignment procedure for the "31M.", "25M.", and "19M." bands. Use the crystal calibrator to obtain the necessary accuracy. For example, tune the receiver to the 1,000 kc crystal calibrator output with the crystal calibrator "Hi-Lo" switch in "Hi" position. Snap "Hi-Lo" switch to "Lo" and carefully tune receiver to 1,200 kc (the second 100 kc harmonic above 1,000 kc) for minimum "Magic Eye" opening. Move crystal calibrator away from antenna wire, connect test oscillator, and carefully adjust test oscillator for minimum "Magic Eye" opening at a setting of approximately 1,200 kc. Raise test-oscillator output to give sufficient harmonic output and use 8th harmonic (9,600 kc) for aligning in "31M." band at 9.6 mc. Align in the "25M." band at 11.7 mc, (11,700 kc), the 9th harmonic of the test-oscillator 1,300 kc output. Align in the "19M." band at 15.3 mc (15,300 kc), the 9th harmonic of the test-oscillator 1,700 kc output. In each case select the peak giving minimum "Magic Eye" opening.

When aligning with the RCA Stock No. 150 Test Oscillator use the variable (unmodulated) oscillator† and "Magic Eye" indication of receiver output. Set test-oscillator dial 800 kc lower than the desired signal for the four lower frequency ranges and 800 kc higher than the desired signal for the two high ranges and use in same manner as TMV97-C. Insert an open-circuit telephone plug in the test oscillator "Ext. Mod." jack, so the modulated fixed-frequency oscillator will be cut off, and align on the unmodulated variable oscillator signal, which will close the "Magic Eye" and evidence itself by a rushing noise in the speaker.

† The No. 150 Test Oscillator employs a fixed-frequency (800 kc), modulated oscillator and a variable, unmodulated oscillator. The scale is calibrated to the sum frequency for the two higher frequency ranges and to the difference frequency for the four lower frequency ranges.

If the crystal calibrator signals are weak, disconnect test oscillator while using the crystal calibrator.

More accurate alignment in the spread-bands can be accomplished by making final slight adjustments using American, English, or German short-wave broadcasting stations of known frequency for frequency standards.

A-F-C Discriminator Adjustments.—These adjustments are rather critical and should be performed with extreme care. Improper adjustment may result in complete failure of the oscillator control tube to function or else may cause it to detune the oscillator instead of tuning it to the signal. It is assumed that the magnetite core adjusting screw L33 (top of 4th i-f transformer) has been turned all the way out (extreme counter-clockwise) during the preceding tabulated adjustments. Adjustments are as follows: Remove spring "N" on link and arm assembly which connects the "Manual-Electric-Remote" switch shaft to the throw-out gear bracket. Turn "Fidelity" control counter-clockwise. Connect antenna to receiver antenna terminal. With the "Manual-Electric-Remote" switch in "Manual" (right) position, tune in a strong local station near 600 kc or the low-frequency end of the "A" band as accurately as possible by means of the tuning tube "Magic Eye." The most accurate adjustment will be obtained by adjusting the "vernier" tuning knob mid-way between the two points where the eye just appears to start to open. This will place the generated i-f carrier signal frequency exactly in the center of the i-f amplifier response curve (should be 460 kc if i-f amplifier was properly aligned) and is the frequency to which the a-f-c discriminator (4th i-f transformer) should be tuned to resonance. Without disturbing any of the receiver adjustments, place the "high" test-oscillator lead about ¾ of an inch from the grid cap lead of the RCA-6K7, 1st i-f amplifier tube, adjust the test-oscillator output to maximum, turn test-oscillator "Modulation" off, and carefully zero-beat the test-oscillator frequency (approximately 460 kc) with the i-f carrier signal. Avoid placing the test-oscillator lead nearer to the grid cap lead than specified above, as doing so will tend to detune the i-f amplifier. It may be necessary to reduce the local station signal, during this operation, by shortening antenna lead or grounding antenna "A" terminal to chassis in order to increase the loudness of the beat note sufficiently for accurate zero-beat adjustment.

Throw "Manual-Electric-Remote" switch to "Electric" (center) position. A high whistle or beat note will now be heard. Turn the magnetite core screw L33 (top of 4th i-f transformer) slowly clockwise. As this screw is turned, the beat note will first increase to a high audio frequency and will then decrease to a **zero-beat** and then increase in frequency again. The point of exact **zero-beat** is the position for correct adjustment of the discriminator. Zero-beat should also still exist when the "Manual-Electric-Remote" switch is thrown back to "Manual" position. The adjustment is now complete and may be checked by slightly detuning the receiver above and below the local station frequency with the "Manual-Electric-Remote" in "Manual" position, switching to "Electric" position, and noting the oscillator pull-in. Replace spring "N."

Order of Alignment	Test Oscillator: Connection to Receiver	Test Oscillator: Dummy Antenna	Test Oscillator: Frequency Setting	Range-Selector	Receiver Dial Setting	Circuit to Adjust	Adjustment Symbols	Adjust to Obtain
1	——	——	——	——	——	4th I-F Trans.	L33	Turn Extreme Counter-clockwise
2	No. 6 6K7 Eye I-F Grid Cap	.001 Mfd.	460 kc	"Standard Broadcast"	No Signal 550-750 kc	3rd I-F Trans.	L29 and L30	Min. Eye
3	No. 5 6K7 1st I-F Grid Cap	.001 Mfd.	460 kc	"Standard Broadcast"	No Signal 550-750 kc	2nd I-F Trans.	L26 and L27	Min. Eye
4	No. 2 6L7 Det. Grid Cap	.001 Mfd.	460 kc	"Standard Broadcast"	No Signal 550-750 kc	1st I-F Trans.	L23 and L24	Min. Eye
5	No. 2 6L7 Det. Grid Cap	.001 Mfd. k	460 kc	"Standard Broadcast"	No Signal 550-750 kc	5th I-F Trans.	L35 and L36	Max. (peak)
6	Ant. Term.	300 Ohms	6,000 kc a	"49M."	6.0 mc	"49M." Osc.	C10	Min. Eye b
7	Ant. Term.	300 Ohms	6,100 kc	"49M."	6.1 mc	"49M." Osc.	C10	Min. Eye
8	Ant. Term.	300 Ohms	6,100 kc	"49M."	6.1 mc	"49M." Det.	C20	Min. Eye
9	Ant. Term.	300 Ohms	6,100 kc	"49M."	6.1 mc	"49M." Ant.	C3	Min. Eye
10	Ant. Term.	300 Ohms	1,200 kc c	"31M."	9.6 mc	"31M." Osc.	L12	Min. Eye d
11	Ant. Term.	300 Ohms	1,300 kc	"25M."	11.7 mc	"25M." Osc.	L11	Min. Eye e
12	Ant. Term.	300 Ohms	1,700 kc	"19M."	15.3 mc	"19M." Osc.	L10	Min. Eye f
13	Ant. Term.	300 Ohms	20,000 kc	"S.W."	20 mc	"S.W." H-F Osc. ("C")	C65	Min. Eye g
14	Ant. Term.	300 Ohms	9,500 kc	"S.W."	9.5 mc	"S.W." L-F Osc. ("C")	L14	Min. Eye h
15	Ant. Term.	300 Ohms	20,000 kc	"S.W."	20 mc	"S.W." H-F Osc. ("C")	C65	Min. Eye
16	Ant. Term.	300 Ohms	6,000 kc	"M.W."	6.0 mc	"M.W." Osc. ("B")	C68	Min. Eye
17	Ant. Term.	200 Mmfd.	1,500 kc	"Standard Broadcast"	1,500 kc	"A" H-F Osc.	C15	Min. Eye
18	Ant. Term.	200 Mmfd.	600 kc	"Standard Broadcast"	600 kc	"A" L-F Osc.	L17	Min. Eye
19	Ant. Term.	200 Mmfd.	1,500 kc	"Standard Broadcast"	1,500 kc	"A" H-F Osc.	C15	Min. Eye
20	**Proceed to A-F-C Discriminator Adjustments Outlined Below**							

a—Refer to "Spread-band Adjustments" below for method of using the RCA Stock No. 9572 Crystal Calibrator for adjustments 6, 7, 8, and 9.
b—Use minimum capacity peak if two peaks can be obtained from 1,000 kc harmonics.
c—Refer to "Spread-band Adjustments" below for Test Oscillator setting for adjustments 10, 11 and 12.
d—To check for correct harmonic carefully set Test Oscillator to 1,600 kc using Crystal Calibrator. Signal should be indicated by "Magic Eye" in "31M." band near 9.6 mc.
e—To check for correct harmonic carefully set Test Oscillator to 900 kc using Crystal Calibrator. Signal should be indicated by "Magic Eye" in "25M." band near 11.7 mc.
f—To check for correct harmonic carefully set Test Oscillator to 900 kc using Crystal Calibrator. Signal should be indicated by "Magic Eye" in "19M." band near 15.3 mc.
g—After this adjustment, check for image signal by shifting receiver dial to 19.08 mc. (19,080 kc).
h—Check for image at 8.58 mc. (8,580 kc).

©John F. Rider, Publisher

ELECTRIC TUNING

Principle of Operation

The electric tuning mechanism consists essentially of a quick engaging and dis-engaging reversible electric motor, tuning condenser driving gear train, and eight mechanically interlocked (pushing one button releases all others) station selector push buttons respectively wired to eight adjustable station selector contactor discs (each with a motor stopping insulated segment) mounted on a drum which is direct-coupled to the gang tuning condenser shaft. The arrangement permits any one of eight pre-determined stations to be electrically tuned in by merely touching the correct push button. If all eight buttons are inadvertently locked in, firmly pushing the right-hand button will release them.

The operation may be more readily understood by reference to figures 1, 4, and 5. When the motor is not energized, the armature is pushed to the rear or slightly out of the magnetic center by tension of contact spring "C" and the motor shaft is dis-engaged from the driving gear train. Pressing in any one of the eight push buttons will complete the motor circuit through a station selector contactor disc, assuming that the "Manual-Electric-Remote" switch is in "Electric" position and that the insulated segment in the contactor disc is not opposite its contactor. As the motor starts, the armature will be drawn forward, due to solenoid action, and the pin "F" on the end of its shaft will engage the arm "G" on the small main pinion gear, thereby driving the tuning mechanism. At the same time contact springs "E" and "D" will be grounded, causing suppression of audio amplification and automatic frequency control during the tuning cycle. The motor will continue to operate until the insulated segment in the selector disc breaks the motor circuit, whereupon spring "C" will instantly dis-engage the motor pin "F" from the arm "G" on the small pinion driving gear and open contacts "E" and "D." Pushing another button will cause the above mentioned cycle to be repeated except that the motor will be interrupted by the insulated segment on a corresponding disc. The discs are individually adjustable on a drum mechanism, providing a choice of eight "Electric Tuned" "Broadcast" stations. The arrangement of the motor is such that its rotation will continue in the same direction regardless of the number of "Electric" tuning cycles until the tuning condenser approaches either full-out or full-in of mesh, whereupon lever "H" trips switch S12 which reverses the direction of rotation. A throw-out idler gear is link-coupled to the "Manual-Electric-Remote" control to disconnect the motor drive gear train when the control is thrown to "Manual" position.

Radiotron Cathode Current Readings

Measured with Milliammeter Connected at Tube Socket Cathode Terminals Under Conditions Similar to Those of Voltage Measurements

(1)	RCA-6K7—R-F Amp.	6.2 ma.
(2)	RCA-6L7—1st Det.	3.0 ma.
(3)	RCA-6J7—Osc.	10.0 ma.
(4)	RCA-6J7—Osc. Control	1.2 ma.
(5)	RCA-6K7—1st I-F Amp.	6.7 ma.
(6)	RCA-6K7—A-V-C, A-F-C, Eye I-F Amp.	8.0 ma.
(7)	RCA-6K7—2nd I-F Amp.	6.9 ma.
(8)	RCA-6H6—2nd Det.	———
(9)	RCA-6H6—A.V.C., A.F.C., and Eye.	———
(10)	RCA-6C5—A-F Amp.	1.0 ma.
(11)	RCA-6F6—Driver	23.0 ma.
(12)	RCA-6L6—Output	51.5 ma.
(13)	RCA-6L6—Output	51.5 ma.
(14)	RCA-6G5—Tuning Tube	2.2 ma.
(15)	RCA-5T4—Rectifier	90 ma.**
(16)	RCA-5T4—Rectifier	90 ma.**

(**Cannot be measured at socket)

FOR FIG. 4, SEE FIG.

Mechanism Adjustments 4 OF MODEL 813K

The electric tuning mechanism is designed to be as simple in construction and as fool proof in operation as is possible. In order to maintain the accurate results possible with this device care must be taken in effecting any repairs or adjustments. Reference should be made to figure 4 and the following:

A-F-C and A-F Amplification Suppression Switches.—This switch assembly is located on the motor bracket and closes due to solenoid action of motor armature. The tension of the long contact spring "C" is important in bringing about quick dis-engagement of the motor and in permitting the motor to pull into mesh with the drive mechanism. Normal adjustment is attained when the short springs "D" and "E" are aligned exactly straight with contact points separated approximately 1/32 of an inch and with the spring "C" spaced approximately 7/32 of an inch from spring "D" at the point of contact. If necessary, in order to obtain positive pull-in and quick dis-engagement of the motor, the tension of spring "C" should be increased or decreased by bending. This action should be checked with the front apron of the chassis raised two inches higher than the rear. Contacts of the switch must be kept clean. Crocus cloth or a relay burnisher may be used for this purpose.

Motor Reversing Switch.—It is necessary to automatically stop and reverse the drive motor before the tuning condenser reaches the ends of its travel. Approximately 175 degrees of sweep is required, and the reversal must take place above 1,700 kc and below 540 kc but not too near the limits of the scale. The coupling between the station selector drum and the tuning condenser shaft should be attached so that the reversing switch trip lever "H" is exactly vertical when the condenser is full-out of mesh. There should be 1/32 of an inch clearance between the end of the condenser shaft and the selector drum shaft. While the trip lever is in this position the reversing switch bracket should be adjusted by means of its elongated mounting holes until the switch pin "I" just lightly touches trip lever "H."

Main Pinion Gear.—Clearance between the small high-speed pinion gear "E" and the intermediate gear "K" determines the amount of mechanical noise produced. Correct adjustment will give approximately 1/32 of an inch movement of back lash at the end of pinion arm "G" when gear "K" is held stationary. Arm "G" must also be adjusted for correct mesh with motor shaft drive pin "F." With the motor shaft completely forward and pinion "E" tight against its front bearing, the pinion mounting stud "J" should be adjusted so that pin "F" meshes full thickness with the rotating arm "G." An increase of this mesh will increase over travel on tuning while a decrease of mesh will decrease the over travel. The elongated hole in the front bracket allows sufficient movement of the mounting stud "J" to permit above mentioned gear mesh adjustment.

"Manual-Electric-Remote" Changeover. — (1) Link and arm adjustment—To properly line up the mechanical link between the switch shaft and throw-out gear bracket "MM," the set screws holding the link arm on the switch shaft must be loosened, the switch turned to the "Manual" position (extreme right) and the link lever revolved until the distance between the link-connecting pin (extends through chassis apron) and the right-hand (viewed from front) side of the slot, in front apron of chassis, is exactly 5/16 of an inch. If this adjustment is not properly made, correct operation of "Electric" or "Remote" tuning will not result. (2) Throw-out Gear Adjustment—To obtain smooth operation on "Electric" or "Remote" positions it is important that the proper clearance is maintained between the throw-out gear "M" and the intermediate gear "L." With the "Manual-Electric-Remote" control thrown to "Remote" position (extreme left) adjust the mesh between these gears by means of the eccentric screw "O" and lock nut "P," contacting the throw-out gear bracket "MM," until there is approximately 1/64 of an inch backlash of gear "L" when gear "M" is held stationary.

Vernier Tuning.—In case it becomes necessary to remove tuning condenser drive shaft "T," it should be replaced by sliding anti-backlash gear "R" on condenser shaft apart so that compression amounting to one tooth on the gear is obtained in the springs. Adjust mesh of gear "R" with pinion gear "U" on vernier shaft before tightening screws "S" so that smooth tuning is obtained throughout the range.

Motor Alignment. — The motor shaft must be exactly aligned with the axis of the pinion gear with which it engages. This may be adjusted by loosening the mounting screws "V" of the motor and aligning shaft by sight. Correct alignment may be tested by slowly rotating motor and observing the relation between the pin "F" of the motor shaft and the arm "G" on the pinion. The relation of the two should remain the same throughout the revolution. Additional movement for adjustment may be obtained by the motor bracket screws "W" if necessary.

Station Selector Drum.—(1) Bearing Adjustment—The selector drum may be removed by unscrewing the two bearing adjusting screws "X" on the front and rear bearings and sliding shaft out of slots on frame. To replace drum, the reverse procedure should be followed holding bearing adjusting plates "Y" firmly against the shaft and tightening adjusting screws. (2) Contact adjustment—Two types of contact strips are used. They are designated on figure 4, as types 1 and 2, on which the individual contacts are respectively adjustable and fixed. On type 1, the individual contacts should be adjusted by setting the end contact springs near the mid-position of their travel and aligning the remaining springs to them by means of a straight edge. Either type of contact strip should be adjusted to the selector drum by firmly placing two selector adjusting keys in the station adjustment strip, positions 1 and 8 (locking respective discs), loosening contact strip adjusting nuts "Z" and shifting the contact strip until the end contacts are exactly centered on the respective disc insulating segments. More accurate adjustment may be made by silhouetting the point of contact with a piece of white paper held behind the contact. Adjustment will be facilitated by removing complete assembly from rear of tuning condenser by unscrewing the three mounting screws. Contacts and discs must be kept free of dirt, filings, and other extraneous matter.

Lubrication. — The dial pointer slide should be greased with petrolatum. This same lubrication should be applied lightly to all gear faces of the drive mechanism and sparingly with a cloth to the station selector discs. Any good household oil, such as "3-IN-ONE," is suitable for the motor shaft bearings. A light grade of engine oil should be used for all gear bearings. Medium viscosity engine oil, similar to "PYROIL" (B), should be applied between the thrust washers on the motor shaft. "CASTORDAG," a mixture of graphite and castor oil, is recommended for use at the selector drum end-bearing slots and at the bearings of cable pulleys.

Station Adjustment

Any eight stations may be chosen for "Electric" tuning. Remove the two escutcheon plates from the side of the dial, place proper call letter labels in the celluloid windows, and replace escutcheons. Turn the power on and proceed to set up the "Electric" tuning as follows:

1. Set Range Selector to "Standard Broadcast."
2. Turn "Manual-Electric-Remote" control to "Electric."
3. Turn Fidelity control counter-clockwise.
4. Press push button No. 1 (left) and wait until station pointer comes to rest.
5. Turn the "Manual-Electric-Remote" control to "Manual."
6. Remove adjusting key from receptacle on top of station selector drum mechanism.
7. Insert key in position marked "1" in station adjustment strip and push the key all the way down to properly fit in slot in disc.
8. Tune the receiver very carefully by means of the manual tuning knob and the "Magic Eye," to station chosen for No. 1.
9. Remove key.
10. Turn the "Manual-Electric-Remote" control to "Electric."

Button No. 1 is now properly set for "Electric" tuning. Proceed similarly for the other seven push buttons, matching each station on the dial with the same number on the station adjustment strip. Repeat the above steps but place the key respectively in positions 2, 3, 4, etc., and in each case tune to the proper station. Pressing the proper button will now cause the desired station to be tuned in electricaliy.

Armchair Control

When a Model G-8 armchair control is attached to the receiver as shown in figure 5 it duplicates the action of the push buttons on the front panel when the "Manual-Electric-Remote" control is turned to "Remote" position.

Service Hints

a. Capacitors C18 and C74 should be carefully checked for leakage or short circuit in cases of intermittent operation or no operation. C74 should be eliminated from the circuit, R9 should be shorted out, and C18 replaced by Stock No. 4839, as shown by the Schematic Circuit Diagram figure 1, in the event of trouble in this circuit.

b. Capacitor C5 should be checked for leakage or short circuit.

c. Resistor R5 was 33,000 ohms in some instruments. Replace with Stock No. 12333.

d. Capacitor C16 was 82 mmfd. in some instruments. Replace with Stock No. 14021.

Service Data

The various diagrams of this booklet contain such information as will be needed to isolate causes for defective operation if such develops. The ratings of the resistors, capacitors, coils, etc., are indicated adjacent to the symbols signifying these parts on the diagrams. Identification titles such as R1, L1, C1, etc., provide reference between the illustrations and Replacement Parts List. The coils, transformer windings, and reactors are rated in terms of d-c resistance to permit continuity checks.

Precautionary Lead Dress.—(1) Green bus lead from C1 to S2 should be 2¾ inches long, (2) green bus lead from C59 to S4 should be 2½ inches long, (3) green bus lead from C13 to S3 should be 2¾ inches long, (4) bare bus lead from C12 to S3 should be 1⅛ inches long, (5) blue and red leads from tube No. 3 to L9 should be dressed away from the coil, (6) tube No. 3 grid lead should be 6 inches long, (7) all leads to rear of oscillator coils should be dressed close to the chassis, (8) clamp "Magic Eye" cable to the dial bracket, (9) filament leads should all be twisted, (10) leads from C44 and C48 should be replaced dressed away from other leads, (11) twisted a-c leads near R22 should be dressed away from R22, (12) leads from S5 to the first i-f transformer should be twisted, (13) temperature-stabilizing capacitors marked 1A, 2A, and 3A should be dressed perpendicular to chassis, (14) blue bus lead from L21 to tube No. 1 plate should be dressed away from shield plate on range selector assembly, (15) C36, C38, and K_2 of tube No. 9 should be grounded to the ground lances near corner of chassis. The following should be dressed away from chassis: (16) Yellow bus lead from cathode of tube No. 3 to S3, (17) yellow bus lead to OG of tube No. 2, (18) yellow bus lead from the 5th i-f transformer to phonograph terminal board, (19) blue bus lead from C47 to R26. When necessary to replace bus leads, use only wire having same diameter as original.

Phonograph Attachment.—A terminal board is provided for connecting a phonograph into the audio-amplifying circuit. RCA Victor Models R-93, R-93-A, R-93-2, or R-94 Record Players should be connected as follows: Remove the link from the phonograph terminal board. Connect green wire in Radio-Record switch cable to terminal 1; yellow to terminal 2; shield terminal 3; and tape up the red and blue. Connect a 2-conductor twisted cable between the Record Player binding posts and the screw-terminals on Radio-Record switch. If additional volume is desired, connect an RCA Stock No. 9632 transformer between the 2-conductor twisted cable and the screw-terminals on Radio-Record switch as follows: Yellow and brown transformer leads and one side of twisted cable to ground screw-terminal on switch; black transformer lead to other side of twisted cable; and blue transformer lead to other screw-terminal on switch.

Loudspeaker.—Two types of loudspeakers are used which will be referred to as types 1 and 2. In type 1 the cone centering diaphragm is cemented to a fixed ring, while in type 2 the centering diaphragm is cemented to an adjustable ring. Replacement of cone for either type is identical. Centering of cone for type 1 loudspeaker is made with three narrow celluloid or paper feelers after first removing the front dust cover and cutting free the cone centering diaphragm. The dust cover may be removed by a light application of acetone, using care not to allow the acetone to flow into the air gap. The centering diaphragm should be cemented in place after placement of feelers. Sufficient time should be allowed for the ambroid to set before removing feelers. Use ambroid to replace dust cover. Centering of cone for type 2 loudspeaker differs only in that it is not necessary to cut free the centering diaphragm, adjustment being made in the usual manner by means of screws on the adjustable cone centering ring.

MODEL 910KG, U126, U128
Schematic, Socket
Trimmers, Drive Data

RCA MFG. CO., INC.

IF PEAK 455 KC

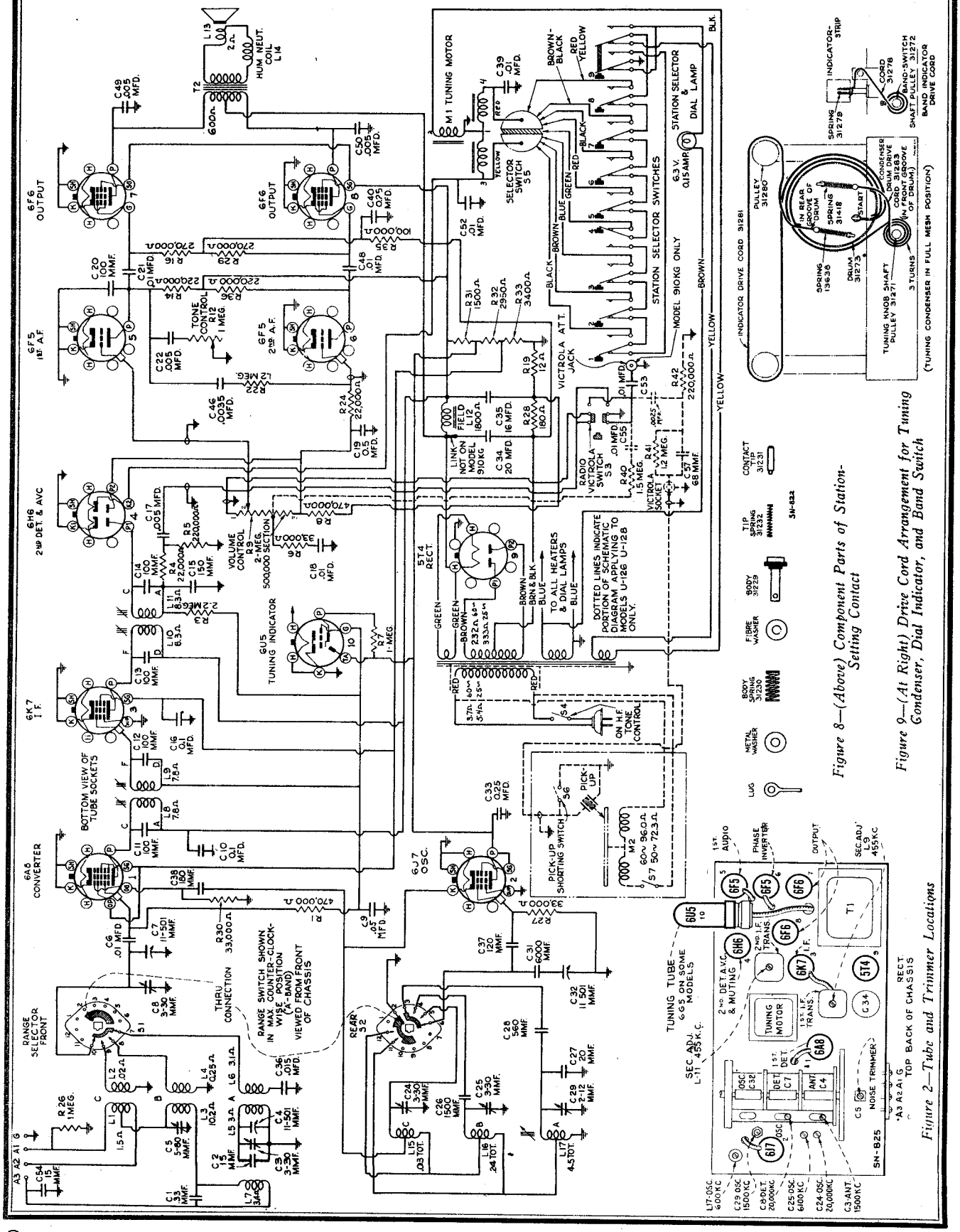

Figure 8—(Above) Component Parts of Station-Setting Contact

Figure 9—(At Right) Drive Cord Arrangement for Tuning Condenser, Dial Indicator, and Band Switch

Figure 2—Tube and Trimmer Locations

©John F. Rider, Publisher

MODELS 910KG,U126,U128
Chassis Wiring,Voltage
Transformer,Specs.

RCA MFG. CO., INC.

Measurements made to chassis unless otherwise indicated, with set tuned to quiet point, volume control at minimum. Values should hold within approximately ±20% with 117-volt a-c supply.

***NOTE:** Values with star (*) are operating voltages in circuits with high series-resistance, and when measured will read lower depending on the voltmeter loading.

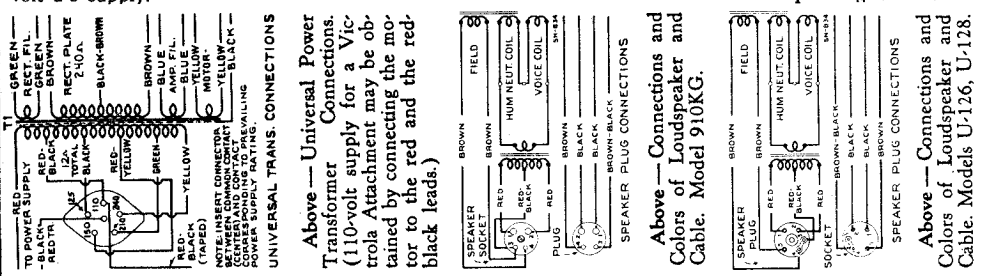

Above — Universal Power Transformer Connections. (110-volt supply for a Victrola Attachment may be obtained by connecting the motor to the red and the red-black leads.)

Above — Connections and Colors of Loudspeaker and Cable. Model 910KG.

Above — Connections and Colors of Loudspeaker and Cable. Models U-126, U-128.

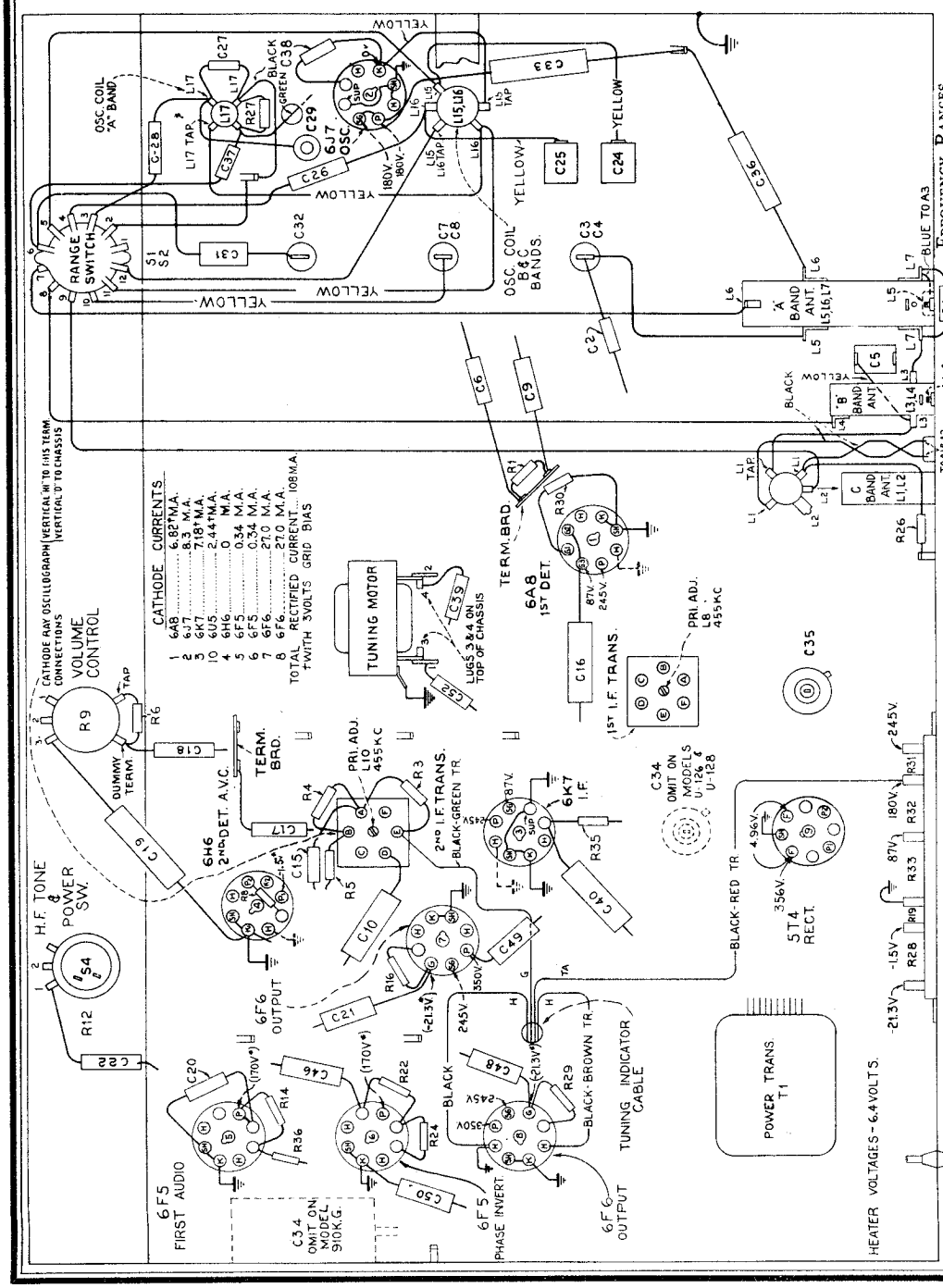

Figure 4—R-F Wiring Diagram and Socket Voltages

R-F ALIGNMENT FREQUENCIES
Band "C" ..... 20,000 kc (osc., ant.)
Band "B" ..... 6,100 kc (osc.)
Band "A" ..... 600 kc (osc.), 1,500 kc (osc., ant.)

POWER OUTPUT
Undistorted ..... 10 watts
Maximum ..... 12 watts

LOUDSPEAKER
Type ..... 12-inch Electrodynamic
Voice Coil Impedance ..... 2.2 ohms at 400 cycles
MODEL U-128
Automatic—Manual
MODEL U-126
Manual

PHONOGRAPH
Type ..... Seven ten or twelve inch
Record Capacity ..... one 10-inch or one 12-inch
Turntable Speed ..... 78 R.P.M. (Adjustable)
Type Pickup ..... Crystal
Pickup Impedance ..... 80,000 ohms at 1,000 cycles

FREQUENCY RANGES
"Standard Broadcast" (A) ..... 540-1,720 kc
"Medium Wave" (B) ..... 2,300-7,000 kc
"Short Wave" (C) ..... 7,000-22,000 kc

POWER SUPPLY RATING—MODELS U-126, U-128

		Radio Only	Total
A	105-125 volts, 50-60 cycles,	120 watts	145 watts
A-6	105-125 volts, 60 cycles,	120 watts	145 watts
B-2	105-125 volts, 25 cycles,	120 watts	145 watts
C	105-130/140-160/200-250 volts, 50-60 cycles,	120 watts	145 watts
C-6 ..	105-130/140-160/200-250 volts, 60 cycles,	120 watts	145 watts

POWER SUPPLY RATING—MODEL 910KG

A	105-125 volts, 50-60 cycles, 125 watts
B	105-125 volts, 25 cycles, 125 watts
C ..	105-130/140-160/200-250 volts, 50-60 cycles, 125 watts

©John F. Rider, Publisher

RCA MFG. CO., INC.

MODELS 910KG,U126,U128
Circuit Data,Antenna
Lead Dress,Tuning Dial

General Description

The RCA Victor Model 910KG Receiver employs a ten-tube, three-band, "Magic Brain" superheterodyne circuit, the arrangement of which is shown in the schematic circuit diagram. Features of design include: "Electric Tuning" for eight broadcast stations; a link-coupled antenna circuit; magnetite-core i-f transformers and "A"-band oscillator coil; full automatic volume control; Victrola jack and switch; "Magic Eye" tuning tube; improved 12-inch dust-proof electrodynamic loudspeaker; aurally compensated audio volume control; continuously variable high-frequency tone control; provision for armchair control attachment; illuminated band indicator; noise-reducing antenna adjustment on "A" band; temperature-stabilized capacitors; phase inverter audio amplifier; and push-pull power output stage.

The Model U-126 combination instrument consists of a radio receiver similar to the Model 910KG, and in addition, a phonograph turntable with a self-starting electric motor, and crystal pickup. The phonograph will play ten- or twelve-inch records; and automatically shuts "off" at the end of record play. The output of the pickup is "shorted" out when the pickup is on the pickup rest.

The Model U-128 combination instrument consists of a radio receiver similar to the Model 910KG, with an automatic phonograph mechanism. The phonograph has a self-starting motor, crystal pickup, and may be set to play ten-inch and twelve-inch records singly, or automatically. In the automatic position, seven twelve-inch; eight ten-inch; or a mixed group of seven, ten- and twelve-inch records, may be played in succession. The output of the pickup is "shorted" out when the pickup is on the pickup rest.

Service Data

Victrola Attachment. — A jack located near the "Magic Eye" tube is provided for connecting a Victrola Attachment into the audio-amplifying circuit on Model 910KG. The cable running from the Victrola attachment should be terminated in a Stock No. 31048 plug to fit the jack.

Loudspeaker.—Centering of the loudspeaker is made in the usual manner with three narrow celluloid or paper feelers after first removing the front dust cover. This may be removed by softening its cement with a light application of acetone, using care not to allow the acetone to flow into the air gap. A dust cover should be cemented in place upon completion of adjustment.

Precautionary Lead Dress. — (1) The lead from the left pilot light should be kept behind the bulb and toward the "Magic Eye," to keep it away from the 6F5 grid cap, (2) leads from mica trimmers to coil should be kept away from the coil and other parts, (3) leads on oscillator coil which are an extended part of the coil winding should be as short as possible, (4) "C" band series capacitor C31 must have leads as short as possible, (5) all leads from antenna board to antenna coils should be dressed toward back apron, (6) the one lead of the line cord and the primary lead of the power transformer which run to the power switch should be twisted together, (7) shielding on leads to Victrola switch should be kept away from the switch terminals and jack.

Antenna Connections

RCA Victor Master Antenna Kit.—Connect the twisted-pair transmission line to terminals A1 and A2 on the terminal board at rear of chassis. Connect the counter-poise to A3. Terminal G may be connected to ground, but this connection is not necessary for correct operation.

Noise-Reducing Adjustment.—After the RCA Victor Master Antenna Kit is connected to the receiver, tune the receiver to a point near 900 kc where no station is heard. Turn volume control clockwise until noise is heard. If no noise of a regular character is audible, start any brush-type motor-driven appliance, such as a vacuum cleaner, electric razor, refrigerator, etc., but do not bring it too near the receiver. This will generate noise as a continuous crackling, or buzz. Adjust C5, which is mounted behind the antenna terminal board, to a point where this noise is reduced to a minimum.

Adjustment of the noise reducing trimmer C5 should be made in the customer's home, with the RCA Victor Master Antenna connected to the receiver.

This adjustment is effective only when the RCA Victor Master Antenna is used. For all other types of antenna, the noise-adjustment trimmer C5 should be screwed all the way down.

Other Antennas.—Use terminals A1 and A3 on the receiver terminal board as antenna and ground connecting points respectively. Terminal A3 may be connected to terminal G, unless this causes interference, in which case this connection should be omitted.

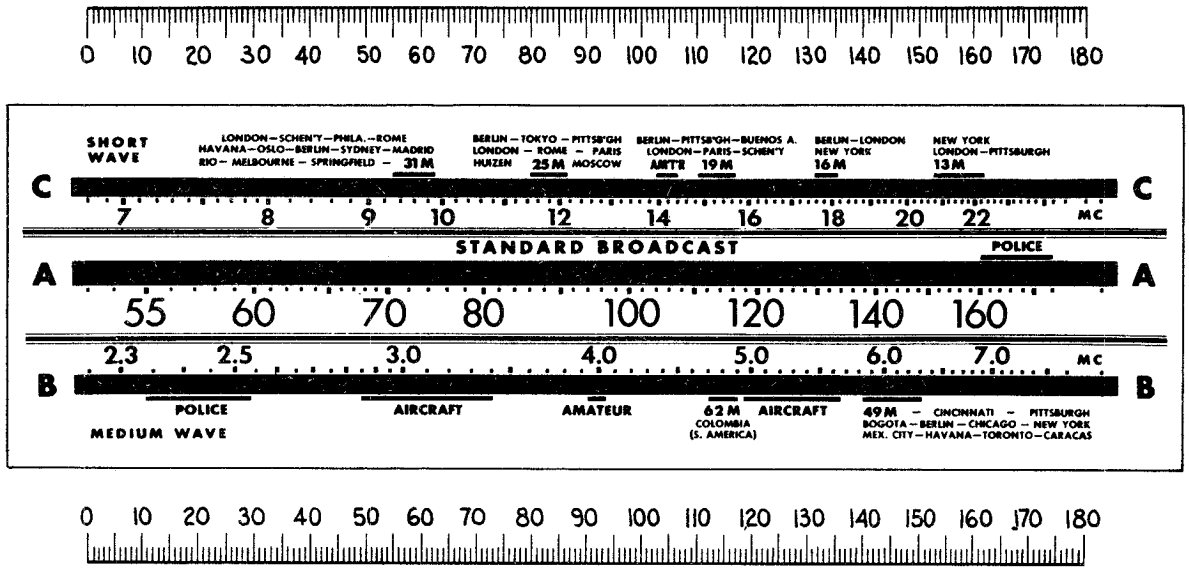

Figure 1—Tuning Dial, and Corresponding 0-180° Calibration Scale

The corresponding dial setting for any reading of the calibration scale can be determined by drawing a line straight up from this point; for example, 151.5° on the calibration scale corresponds to a dial reading of 1,500 kc on "A" band. Read instructions under "Alignment Procedure."

©John F. Rider, Publisher

MODELS 910KG,U126,U128
Alignment,Turntable Data

RCA MFG. CO., INC.

Steps	Connect the high side of test-oscillator to —	Tune test-oscillator to —	Range Selector	Set tuning gang to—	Adjust the following for max. peak output
No. 1	6K7 I-F grid cap in series with .01 mfd.	455 kc	"A"	Quiet point between 550-750 kc	L10, L11 (2nd I-F Transformer)
No. 2	6A8 Det. grid cap in series with .01 mfd.	455 kc	"A"		L8, L9 (1st I-F Transformer)
No. 3	A2. Connect A1 to chassis.	20 mc	"C"	20 mc (147.5°)	C24 (osc.)* C8 (det.)†
No. 4	A2, in series with 100 mmfd. Connect A3 to chassis.	6,100 kc	"B"	6,100 kc (145.5°)	C25 (osc.)**
No. 5	A2, in series with 100 mmfd. Connect A3 to chassis.	1,500 kc	"A"	1,500 kc (151.5°)	C29 (osc.) C3 (ant.)
No. 6	A2, in series with 100 mmfd. Connect A3 to chassis.	600 kc	"A"	600 kc (29.5°)	L17 (osc.)
No. 7	A2, in series with 100 mmfd. Connect A3 to chassis.	1,500 kc	"A"	1,500 kc (151.5°)	C29 (osc.)

* Use **minimum** capacity peak if two peaks can be obtained. Check to determine that the correct peak has been used by turning to 141.5° (19,090 kc), at which point a weaker signal should be received.

** Use **minimum** capacity peak if two peaks can be obtained. Check to determine that the correct peak has been used by turning to 124° (5,190 kc), at which point a weaker signal should be received.

† Rock gang condenser and use maximum capacity peak if two peaks can be obtained with C8.

Cathode-Ray Alignment is the preferable method. Connections for the oscillograph are shown in the chassis drawing.

Output Meter Alignment.—If this method is used, connect the meter across the voice coil, and turn the receiver volume control to maximum.

Test-Oscillator.—For all alignment operations, connect the low side of the test-oscillator to the receiver chassis, and keep the output as low as possible to avoid a-v-c action.

Calibration Scale on Indicator-Drive-Cord Drum.—The tuning dial is fastened in the cabinet and cannot be used for reference during alignment, therefore a calibration scale is attached to the rear of the indicator-drive-cord drum which is mounted on the front shaft of the gang condenser. The setting of the gang condenser is read on this scale, which is calibrated in degrees. The correct setting of the gang in degrees, for each alignment frequency, is given in the alignment table.

As the first step in r-f alignment, check the position of the drum. The "0" mark on the drum scale must be vertical, and directly over the center of the gang-condenser shaft when the plates are fully meshed. The drum is held to the shaft by means of two set screws, which must be tightened securely when the drum is in the correct position.

Pointer for Calibration Scale.—Improvise a pointer for the calibration scale by fastening a piece of wire to the gang-condenser frame, and bend the wire so that it points to the "0" mark on the calibration scale when the plates are fully meshed.

Dial-Indicator Adjustment.—After fastening the chassis in the cabinet, attach the dial indicator to the drive cable with indicator at the 530 kc mark, and gang condenser fully meshed. The indicator has a spring clip for attachment to the cable.

Turntable Mechanism Model U-126

The crystal unit of the pickup is sealed in a metal case against extremes of climate. The offset mounting of the crystal unit in the pickup arm insures ideal tracking between needle and record grooves. If failure should occur due to a defective crystal, no attempt should be made to repair the crystal, but a new replacement crystal unit should be installed.

The turntable drive is a self-starting, variable-speed, governor-type, induction motor. The motor speed adjusting screw is located under the turntable, and may be adjusted by inserting a screwdriver thru one of the holes in the turntable, after the hole has been lined up with the screw. The flexible motor drive arrangement is similar to the U-128. The motor speed should be 78 r.p.m., and may be checked by placing a piece of paper between a record and the turntable, with the paper protruding beyond the edge of the record, and then counting the number of revolutions of the turntable per minute. The motor is designed to be simple and foolproof in operation. Occasionally, however, certain adjustments and lubrication may be required. These are illustrated and explained in figure 12. In addition, an application of oil to the felt pad, which rubs against the governor disc, will insure smooth operation.

The turntable is started by pushing to the rear the motor starting lever, which appears to the right of the turntable. The adjustment on the automatic motor stopping switch should be made so that the switch will snap to the "off" position when the needle in the pickup head is 1¾ inches away from the center of the turntable. The locking screw and details of the switch mechanism are shown in figure 14. The locking screw and nut may be reached, from underneath the motor board, or, by an open end wrench, under the turntable.

FOR AUTOMATIC RECORD CHANGER DATA, SEE INDEX

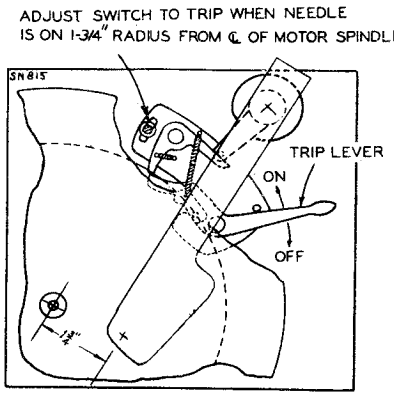

Figure 14—Adjustment of Automatic Stop Switch

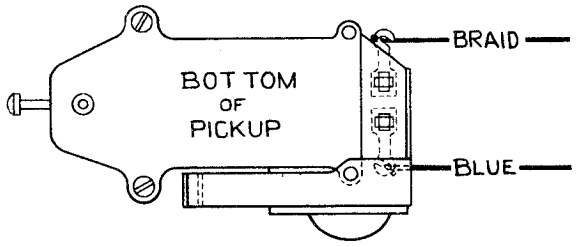

Figure 15—Pickup Connections

©John F. Rider, Publisher

©John F. Rider, Publisher

Electric Tuning Mechanism

The circuit of the electric tuning mechanism is shown in the schematic diagram, and the mechanical details are illustrated below.

The action can be understood by following a cycle of operation:

When a station button is pushed in, it completes the 24-volt circuit through the corresponding station-setting contact and one-half of the brass selector disc, which is connected to one side of the motor field coil. This energizes the motor, and the rotor is pulled forward, engaging with the gear train that drives the tuning condenser and selector disc. The condenser and disc rotate until the insulation line comes under the particular station-setting contact, and the motor circuit is broken. Inertia carries the insulation line past the station-setting contact which then makes contact to the other half of the disc; This completes the circuit to the other side of the motor field coil, causing the motor to reverse. The floating flywheel is still turning in the original direction and therefore slows down the reversal movement of the motor; as a result the selector disc is moved slowly back until the insulation line is under the station-setting contact, when the circuit is broken and the mechanism stops.

Adjustment of Flywheel Friction

In normal operation, the motor drives the tuning condenser and selector disc until the insulation line just passes the particular station-setting contact: The motor then reverses and moves the disc slowly in the opposite direction until the insulation line is under the contact, and the mechanism stops.

In some cases, particularly with high line-voltage, the disc may make two or three reversals before stopping.

The flywheel friction adjustment screw should be set to give the least number of reversals with the chassis in normal horizontal position.

Adjustment of Selector Disc

The brass selector disc is fastened to the rear shaft of the tuning condenser by means of two set-screws. When the condenser is at maximum (plates fully meshed) the insulation line should be horizontal, with the operating-end at the left (viewed from rear). The operating-end has dark insulating material and the brass is beveled at this end.

The selector disc should be set so that the contact-tip plungers in the station-setting contacts project not more than 1/16-in. from the body of the contacts.

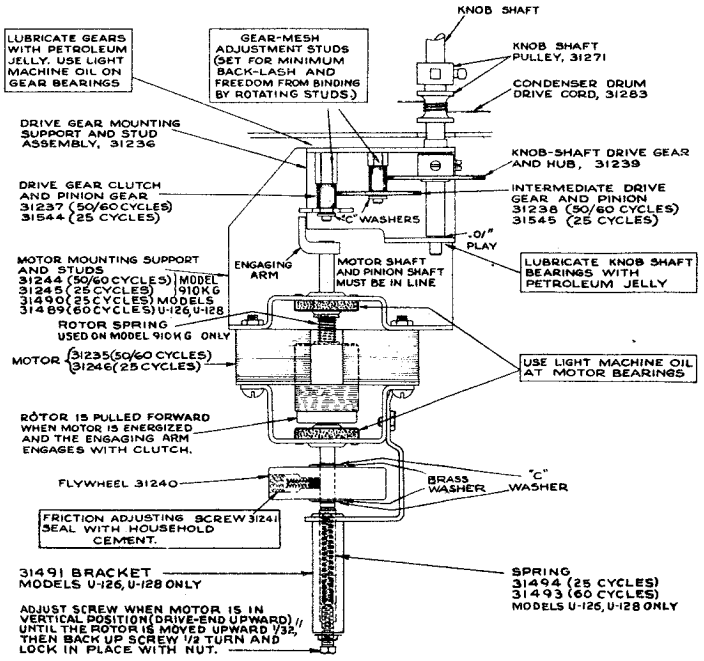

Figure 6—Motor and Gear Mechanism

There must be 1/32-inch clearance between the end of the engaging arm and the face of the intermediate gear when the motor is in its full forward position.

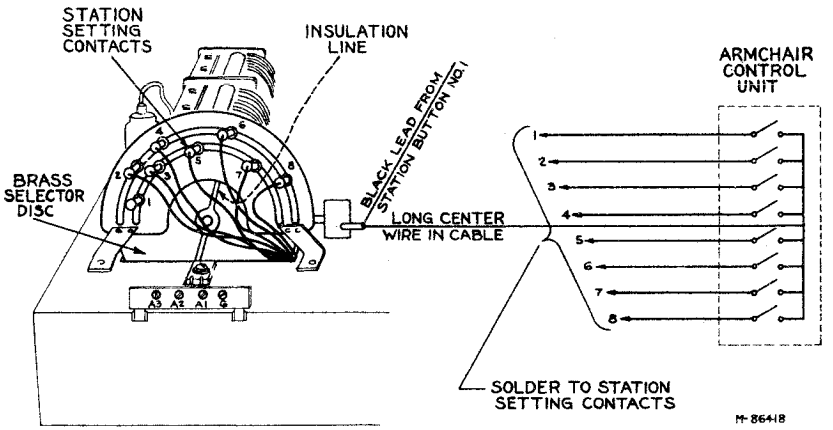

Figure 7—Station-Setting Contacts and Selector Disc

This illustration shows connections for a G8A Armchair Control Unit. This unit is not supplied with the receiver but may be added as an accessory.

Colors of Leads from Push Buttons to Station-Setting Contacts

Station Button	Color of Lead To Station-Setting Contact	Station Button	Color of Lead To Station-Setting Contact
No. 1	Black	No. 5	Red
No. 2	Brown	No. 6	Red-black
No. 3	Blue	No. 7	Brown-black
No. 4	Green	No. 8	Red-yellow

Muting Circuit

When the electric tuning mechanism is in action, the motor-supply voltage is fed into a diode rectifier circuit which applies a high bias to the first-audio amplifier. This prevents audio amplification and makes the set quiet or "mute" while the mechanism is operating.

Lubrication

Motor bearings and **gear bearings;** use light machine oil.
Gear faces; use "Pure Oil No. 611" or petroleum jelly.
Dial-indicator pulleys and **rails;** use "Castordag" or petroleum jelly.

Selector disc; apply ***thin*** film of petroleum jelly.

Friction leather on flywheel; apply "neats-foot" oil. When replacing leather, soak it for at least 24 hours in neats-foot oil, and insert in flywheel while dripping.

Armchair Control Unit

When a Model G8A Armchair Control is connected to the receiver as shown in figure 7 it duplicates the action of the push-buttons on the front panel when No. 1 button is pressed down. The black lead from push-button No. 1 is unsoldered from No. 1 station-setting contact and soldered to a terminal board which is to be mounted on the frame of selector mechanism. In some cases one of the other seven station buttons on the set may be used in place of No. 1 button for the operation of the Armchair Control.

This arrangement allows the use of only seven of the eight buttons when tuning in stations at the set, but allows the use of the entire eight buttons on the Model G8A Armchair Control. In operating the G8A Armchair Control the push-button must be held down until the station has been tuned in. Care must be taken not to hold two of the station-buttons down at one time as both windings of the motor may be engaged instantaneously causing the motor to be inoperative and overheated.

ADJUSTMENTS FOR ELECTRIC TUNING

1. Make a list of the desired eight stations, arranged in order from low to high frequencies.

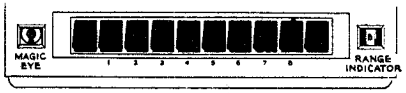

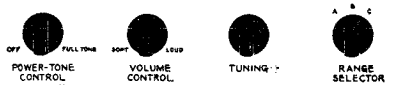

Figure 3—Location of Controls

The left-hand push-button is a Victrola-Attachment switch. The right-hand push-button is for dial tuning.

2. Turn range selector to "A" band, turn power on, and allow a few minutes for warming up.
3. Press down the "dial-tuning" (right-hand) button.
4. Manually tune in the first station on the list, using the "Magic Eye" for accurate tuning.
5. Hold down the "dial-tuning" button, and press down station button No. 1 (second from left). Both buttons will stay down. Move adjusting pin No. 1 to the insulating line on the disc at rear of gang. When the pin is correctly centered on the insulating line, the central dial lamp will go out.
6. Press down any other button in order to release the dial-tuning button and station button No. 1. Then press down station button No. 1 again. The electric tuning mechanism will function to tune in the station, and the central dial lamp will stay on.
7. Repeat this process for the remaining stations.

MODELS 910KG,U126,U128
Parts List

RCA MFG. CO., INC.

REPLACEMENT PARTS

Insist on genuine factory-tested parts, which are readily identified and may be purchased from authorized dealers.

STOCK No.	DESCRIPTION	Unit List Price
	RECEIVER ASSEMBLIES	
31492	Bearing—Variable condenser motor rotor adjustment bearing—less bracket and cup assembly (Models U-126 and U-128)	.10
31253	Board—Antenna and ground terminal board (Model 910KG)	.25
31531	Board—Antenna and ground terminal board (Models U-126 and U-128)	.25
31229	Body—Station-setting contact body, less contact tip and tip spring	.18
31276	Bracket—Band indicator mounting bracket complete—less indicator strip, cord, and tension spring	.40
31491	Bracket—Bracket and bearing cup for variable condenser motor rotor adjustment (Models U-126 and U-128)	.45
31282	Bracket—Magic Eye mounting bracket and holder	.22
12714	Capacitor—Adjustable trimmer 2-12 mmfd. (C29)	1.50
31292	Capacitor—Dual adjustable trimmer 3-30 mmfd. each section (C24, C25)	.40
31252	Capacitor—Adjustable trimmer 5-80 mmfd. (C5)	.25
12896	Capacitor—15 mmfd. (C2, C54)	.35
12948	Capacitor—33 mmfd. (C1)	.35
31432	Capacitor—20 mmfd. (C27)	.40
13057	Capacitor—68 mmfd. (C57) (Models U-126 and U-128)	.35
12720	Capacitor—100 mmfd. (C20)	.35
31270	Capacitor—100 mmfd. (C11, C12, C13, C14)	.35
12724	Capacitor—120 mmfd. (C37, C38)	.35
12725	Capacitor—150 mmfd. (C15)	.35
31433	Capacitor—560 mmfd. (C28)	.35
31038	Capacitor—1,500 mmfd. (C26)	.35
31405	Capacitor—6,000 mmfd. (C31)	.75
5107	Capacitor—.0025 mfd. (C53) (Models U-126, U-128)	.20
30303	Capacitor—.0035 mfd. (C46)	.40
4838	Capacitor—.005 mfd. (C17, C22, C49, C50)	.25
4858	Capacitor—.01 mfd. (C21, C48) (Models U-126 and U-128)	.25
14393	Capacitor—.01 mfd. (C6, C18, C21, C39, C48, C52, C53, C55) (C21, C48, C53, in Model 910KG only) (C55 in Models U-126 and U-128 only)	.30
11315	Capacitor—.015 mfd. (C36)	.20
30832	Capacitor—.05 mfd. (C9)	.20
4839	Capacitor—0.1 mfd. (C10, C16)	.30
12484	Capacitor—0.25 mfd. (C33)	.30
30965	Capacitor—0.25 mfd. (C40)	.30
30967	Capacitor—0.5 mfd. (C19)	.30
5212	Capacitor—16 mfd. (C35) (Model 910KG)	1.35
31496	Capacitor—16 mfd. (C35) (Models U-126 and U-128)	1.25
31495	Capacitor—20 mfd. (C34) (Models U-126 and U-128)	1.75
5040	Plug—4-contact female plug for speaker cable (Model 910KG)	.30
12493	Plug—5-contact female plug for speaker cable (Models U-126 and U-128)	.30
31280	Pulley—Indicator pointer drive cord pulley	.10
31271	Pulley—Motor pulley	.25
31272	Pulley—Range switch pulley	.20
31250	Resistor—Voltage divider comprising one 1,500 ohm, one 2,950 ohm, one 3,400 ohm, one 12 ohm, and one 180 ohm sections (R19, R28, R31, R32, R33)	.90
14284	Resistor—22,000 ohms, 1/10 watt (R24)	.15
13998	Resistor—22,000 ohms, ½ watt (R4)	.20
11300	Resistor—33,000 ohms, 1/10 watt (R27, R30)	.15
12454	Resistor—33,000 ohms, ½ watt (R6)	.20
14580	Resistor—100,000 ohms, ½ watt (R35)	.20
12264	Resistor—220,000 ohms, ½ watt (R5, R36, R42) (R42 Models U-126 and U-128 only)	.20
11398	Resistor—220,000 ohms, 1/10 watt (R14)	.15
11453	Resistor—270,000 ohms, 1/10 watt (R16, R29)	.15
11452	Resistor—470,000 ohms, 1/10 watt (R1)	.15
12285	Resistor—470,000 ohms, ½ watt (R8)	.20
12013	Resistor—1 meg., 1/10 watt (R7, R26)	.15
30208	Resistor—1.2 meg., ½ watt (R22, R41) (R41 Models U-126 and U-128 only)	.20
11981	Resistor—1.5 meg., 1/10 watt (R40) (Models U-126 and U-128 only)	.15
5131	Resistor—2.2 meg., 1/10 watt (R3)	.15
14887	Retainer—Indicator pointer drive cord pulley retainer	.01
31233	Rotor—Selector rotor disc—mounts on rear of variable condenser shaft	1.16
31241	Screw—4 x 20 headless, cone point set screw for flywheel	.02
4118	Screw—No. 8-32 headless set screw for gear Stock No. 31239	.02
14350	Screw—No. 8-32 square head set screw for selector rotor disc	.03
4669	Screw—No. 8-32 square head set screw for pulley Stock Nos. 31271 and 31272, and drum Stock No. 31273	.03
31364	Socket—Dial lamp socket	.20
13871	Socket—Magic Eye socket	.45
31347	Socket—Pickup socket and bracket	.30
31251	Socket—Tube socket	.25
31365	Socket—Tuning indicator lamp insulated socket	.30
31279	Spring—Band indicator tension spring	.03
31232	Spring—Contact tip spring for station-setting contact	.01
13638	Spring—Indicator pointer drive cord tension spring	.08
31418	Spring—Variable condenser drive cord tension spring	.05
12007	Spring—Retaining spring for core Stock No. 31269	.02
31230	Spring—Station-setting contact body spring	.01
31262	Spring—Tension spring for core Stock No. 31260	.01
31242	Spring—Tension spring for flywheel	.01
31313	Spring—Tension spring for push button switch latch bar	.06
31494	Spring—Variable condenser motor rotor adjustment bearing spring for 25 cycle models only (Models U-126 and U-128 only)	.02
31493	Spring—Variable condenser motor rotor adjustment bearing spring for 50-60 cycle models only (Models U-126 and U-128 only)	.02
31236	Support—Variable condenser drive gear mounting support and studs assembly	.65
31245	Support—Variable condenser motor mounting support and studs for 25 cycle models only (Model 910KG only)	.70
31490	Support—Variable condenser motor mounting support and studs for 25 cycle models only (Models U-126 and U-128 only)	.60
31244	Support—Variable condenser motor mounting support and studs for 50-60 cycle models only (Model 910KG only)	.45
31489	Support—Variable condenser motor mounting support and studs for 50-60 cycle models only (Models U-126 and U-128 only)	.35
31360	Switch—Pickup switch for mounting on push button switch assembly (S3)	2.70
31291	Switch—Range switch (S1, S2)	.95
31312	Switch—Station selector push button switch and bracket complete	4.25
31248	Tone Control—H.f. tone control and power switch (R12, S4)	1.50
31267	Transformer—First i-f transformer (L8, L9, C11, C12)	2.20
31268	Transformer—Second i-f transformer (L10, L11, C13, C14)	2.05
31308	Transformer—Power transformer 105/130-140/160-200 250 volts, 50-60 cycle (T1)	13.85
31226	Transformer—Power transformer 110 volts, 25-60 cycle (T1)	13.00
31225	Transformer—Power transformer 110 volts, 50-60 cycle (T1)	8.50
31450	Volume Control (R9) (Model 910KG only)	1.50
31249	Volume Control (R9) (Models U-126 and U-128 only)	1.50
14531	Capacitor—25 mfd. (C34) (Model 910KG)	1.55
31237	Clutch—Variable condenser drive gear clutch and pinion gear—engages pin on motor shaft—50-80 cycle models only	.35
31544	Clutch—Variable condenser drive gear clutch and pinion gear—engages pin on motor shaft—25 cycle models only	.45
31293	Coil—"A" band antenna coil (L5, L6, L7)	1.30
31296	Coil—"A" band oscillator coil (L17)	1.05
31294	Coil—"B" band antenna coil (L3, L4)	.80
31295	Coil—"B" and "C" band oscillator coil (L15, L16)	.85
31297	Coil—"C" band antenna coil (L1, L2)	.90
31290	Condenser—3-gang variable condenser (C3, C4, C7, C8, C32)	6.50
31231	Contact—Contact tip for station-setting contact	.06
31345	Contact—Push button switch contacts—comprising 10 contacts riveted on insulating strip	.70
31344	Contact—Push button switch contacts—comprising 13 contacts riveted on insulating strip	1.20
31278	Cord—Band indicator drive cord	.12
31281	Cord—Indicator pointer drive cord	.50
31283	Cord—Variable condenser drum drive cord	.20
31269	Core—Adjustable core and stud for i-f transformers	.15
31260	Core—Adjustable core and stud for "A" band oscillator coil	.35
31273	Drum—Indicator drive cord drum	.80
31240	Flywheel—Variable condenser drive motor flywheel	.25
31239	Gear—Variable condenser knob-shaft drive gear and hub	.65
31545	Gear—Variable condenser intermediate drive gear and pinion gear—25 cycle models only	.40
31238	Gear—Variable condenser intermediate drive gear and pinion gear—50-60 cycle models only	.50
31304	Indicator—Band indicator strip (Model 910KG)	.15
31532	Indicator—Band indicator strip (Models U-126 and U-128)	.15
11891	Lamp—Dial, pilot, or compartment lamp, 6.3 V, 0.25 amp.	.17
31480	Lamp—Electric tuning adjustment indicator lamp, 6.3 V, 0.15 amp.	.20
31243	Leather—Friction leather for flywheel	.04
31346	Lock—Push button switch lock plate—comprising 10 contact locks in one strip	.80
31246	Motor—Variable condenser drive motor (M1)—25 cycle models only	6.50
31235	Motor—Variable condenser drive motor (M1)—50-60 cycle models only	4.85
31228	Plate—Selector contact plate—less contacts	.45
31227	Plate—Selector mounting plate—mounts on rear of variable condenser	.50
30868	Plug—2-contact female plug for phono. motor cable (Models U-126 and U-128)	.35

MOTORBOARD ASSEMBLIES
Model U-126

31536	Coupling—Flexible motor coupling complete	2.10
9848	Cup—Used needle cup and lid complete	.75
31465	Mounting—Pickup arm base rubber mounting	.10
31535	Pin—Drive pin to fasten flexible coupling to turntable shaft	.03
30870	Plug—2-contact male plug for automatic switch leads	.35
14195	Screw—Set screw for flexible coupling	.05
30100	Springs—1 set of springs for automatic switch	.08
31155	Spring—Used needle cup cover tension spring	.04
31147	Strip—Complete set of rubber strips for flexible couplings	.40
31534	Switch—Automatic switch and lever complete	2.75
31467	Switch—Switch only for automatic switch (S7)	.55
31533	Turntable—Turntable with spindle shaft and nose complete	4.95
31537	Washers—Turntable bearing and shim washers	.06

MOTORBOARD ASSEMBLIES
Model U-128

31149	Base—Tone arm mounting base	.35
31152	Board—Record changer base complete with all welded and riveted posts and bearings—less all operating parts	7.90
14209	Bumper—Main lever rubber bumper (1)	.08
9848	Cup—Used needle cup, rest, and lid complete	.75
31148	Escutcheon—Index escutcheon	.40
31151	Guide—Pickup lift cable guide (coil spring, 80T 2-in. lg.) (2)	.10
31150	Mounting—Pickup arm base rubber mounting complete	.45
31155	Spring—Needle cup lid tension spring	.04

OPERATING MECHANISM
Model U-128

31134	Bracket—Pickup locating lever mounting bracket (3)	.30
31144	Cam—Cam and gear assembly (4)	2.80
6808	Clutch—Trip lever friction clutch assembly (5)	.35
31146	Coupling—Motor coupling complete with turntable drive gear, rubber strips, motor coupling, and drive arm (6)	1.80
31129	Cover—Cap for top of record post	.45
31116	Finger—Trip lever friction finger assembly (7)	.45
31119	Gear—Long arm and rack gear for front left-hand record post (8)	.60
31120	Gear—Short arm and rack gear for rear right-hand record post (9)	.55
31121	Gear—Record post gear (10)	.90
31123	Guide—Main lever spring guide (11)	.40
31114	Lever—Index lever assembly (12)	.75
31137	Lever—Index lever tension spring lever (13)	.30
31138	Lever—Locating lever and pawl assembly (14)	.70
31113	Lever—Main lever assembly (15)	1.35
31140	Lever—Pickup lift cable lever and spring assembly (16)	.55
31135	Lever—Pickup locating lever assembl. (17)	.65
31130	Lever—Record separator elevating lever complete with adjustment screws (18)	.80
31132	Lever—Trip detaining lever (19)	.30
31115	Lever—Trip lever assembly (20)	1.85
31131	Lever—Trip regulator lever (21)	.25
31133	Pawl—Trip pawl assembly (22)	.80
31124	Pin—Record post drive pin (23)	.04
14207	Roller—Pickup lift cable roller and bracket assembly (24)	.55
31118	Screw—Cone pointed set screw for trip lever hub or record post shelf	.06
4563	Screw—Pickup lift cable screw and nuts	.04
14195	Screw—Set screw for flexible coupling	.05
31117	Screw—Special screw to adjust friction clutch tension	.03
31126	Separator—Record separator knife (25)	.75
31122	Shaft—Record separator post shaft (26)	.40
31125	Shelf—Record post shelf assembly (27)	1.25
31141	Spindle—Turntable spindle shaft and spring	1.40
3676	Spring—Cam pawl tension spring on main gear (12 turns, .190-in. O.D., 43/64-in. lg.)	.04
14190	Spring—Pickup locating lever short spring or locating lever pawl tension spring (38) (16 turns, .180-in. O.D., 19/32-in. lg.)	.08
31145	Spring—Main lever tension spring (29) (18 turns, 9/16-in. O.D., 3-in. lg.)	.05
31136	Spring—Pickup locating lever long spring or index lever tension spring (30) (25 turns, .190-in. O.D., 15/16-in. lg.)	.05
3666	Spring—Pickup lift cable tension spring (31) (20 turns, .195-in. O.D., 1-in. lg.)	.04
31127	Spring—Record separator pressure spring (32) (8 turns, ¾-in. O.D., ¾-in. lg.)	.02
14191	Spring—Trip detaining lever or locating lever tension spring (33) (15 turns, .190-in. O.D., ¾-in. lg.)	.04
31142	Spring—Turntable spindle spring	.03
31147	Strip—Complete set of rubber strips for flexible coupling	.40
31139	Turntable Assembly—less spindle	3.35
31128	Washer—"C" washer for top of record post	.04
31143	Washers—Turntable thrust washers (1 steel, 1 bronze, 1 felt)	.15

STOCK No.	DESCRIPTION	Unit List Price
	MOTOR ASSEMBLIES Models U-126, U-128	
11703	Governor—Motor speed governor	3.05
31448	Motor—105-125 volts, 25 cycle (M2)	23.70
31163	Motor—105-125 volts, 50-60 cycle (M2)	20.50
31157	Motor—105-125 volts, 60 cycle (M2)	17.75
30868	Plug—2-contact female plug for motor leads (Model U-126 only)	.35
30870	Plug—2-contact male plug for motor power cable	.35
31447	Screw—Complete set of motor mounting screws, washers, and spacers—for 25 cycle models only	.40
31158	Screw—Complete set of motor mounting screws, washers, and spacers—for 50-60 cycle models only	.25
14206	Switch—Mofor toggle switch (S7) (Model U-128 only)	.90
	PICKUP AND ARM ASSEMBLIES Model U-126	
31469	Base—Pickup arm base and pivot shaft	.95
31156	Crystal—Pickup crystal cartridge and needle screw	4.25
31468	Pickup and arm complete	7.50
31160	Screw—Pickup needle screw	.12
31161	Shaft—Pickup pivot arm and shaft assembly	.45
	PICKUP AND ARM ASSEMBLIES Model U-128	
31162	Cable—Pickup arm lift cable and clips	.15
31156	Crystal—Pickup crystal cartridge and needle screw	4.25
31159	Pickup and arm complete	7.45
31160	Screw—Pickup needle screw	.12
31161	Shaft—Pickup pivot arm and shaft assembly	.45
	SPEAKER ASSEMBLIES	
13866	Cap—Dust cap for cone center	.03
11234	Coil—Field coil (L12)	3.85
11469	Coil—Neutralizing coil (L14)	.30
31275	Cone—Speaker cone and voice coil (L13)	1.75
5039	Plug—4-contact male plug for speaker (Model 910KG only)	.30
31539	Plug—6-contact male plug for speaker (Models U-126 and U128 only)	.25
31530	Speaker complete (RL70H-2) (Model 910KG only)	12.35
31538	Speaker complete (RL70H-4) (Models U-126 and U-128 only)	10.65
14534	Transformer—Output transformer (T2)	3.85
14357	Washer—Spring washer to hold field coil securely	.06
	MISCELLANEOUS ASSEMBLIES	
31358	Button—Station selector push buttons	.15
13103	Cap—Pilot lamp cap (Bulls Eye) (Models U-126 and U-128 only)	.15
31456	Cover—8-protective covers for push button markers	.08
31540	Cushion—Chassis mounting cushion and screw assemblies—sufficient for one chassis (Models U-126 and U-128 only)	.50
31541	Cushion—Motor plate mounting cushion and clamp assembly—sufficient for one instrument (Models U-126 and U-128 only)	.50
31451	Dial—Station selector dial scale and crystal	.95
31356	Escutcheon—Tuning dial escutcheon—less dial and buttons (Model 910KG only)	2.65
31361	Escutcheon—Tuning dial escutcheon—less dial and buttons (Models U-126 and U-128 only)	2.20
30698	Hinge—Cabinet lid hinge (Models U-126 and U-128 only)	.95
31305	Indicator—Station selector indicator pointer (Model 910KG only)	.40
31542	Indicator—Station selector indicator pointer (Models U-126 and U-128 only)	.35
31355	Knob—Station selector, volume control, tone control, or range switch knob	.12
31458	Marker—"Dial Tuning" push button marker	.01
31457	Marker—"Record Player" push button marker	.01
31589	Marker—Station call letter push button markers	.35
31760	Screen—Compartment lamp screen (Models U-126 and U-128 only)	.20
31306	Screen—Dial color screen	.45
11210	Screw—Chassis mounting screws and washers—(4 required) (Model 910KG only)	.05
14270	Spring—Retaining spring for knob Stock No. 31355	.05
31470	Suspension—Motor board suspension springs, screw, and lockwasher (4 required) (Models U-126 and U-128 only)	.10
11831	Support—Cabinet lid support (Models U-126 and U-128 only)	1.85
	ANTENNA ASSEMBLIES	
31426	Counterpoise Line—Additional length 60 ft. long	1.35
12426	Insulator—Strain and counterpoise insulator	.05
9816	Transmission Line—Additional length 60 ft. long	1.50

ALL PRICES ARE SUBJECT TO CHANGE OR

WITHDRAWAL WITHOUT NOTICE.

©John F. Rider, Publisher

©John F. Rider, Publisher

RCA Victor Master Antenna Kit.—Connect the twisted-pair transmission line to terminals A1 and A2 on the terminal board at rear of chassis. Connect the counter-poise to A3. Terminal G may be connected to ground, but this connection is not necessary for correct operation.

Noise-Reducing Adjustment.—After the RCA Victor Master Antenna Kit is connected to the receiver, tune the receiver to a point near 900 kc where no station is heard. Turn volume control clockwise until noise is heard. If no noise of a regular character is audible, start any brush-type motor-driven appliance, such as a vacuum cleaner, electric razor, refrigerator, etc., but do not bring it too near the receiver. This will generate noise as a continuous crackling, or buzz. Adjust C1 to a point where this noise is reduced to a minimum.

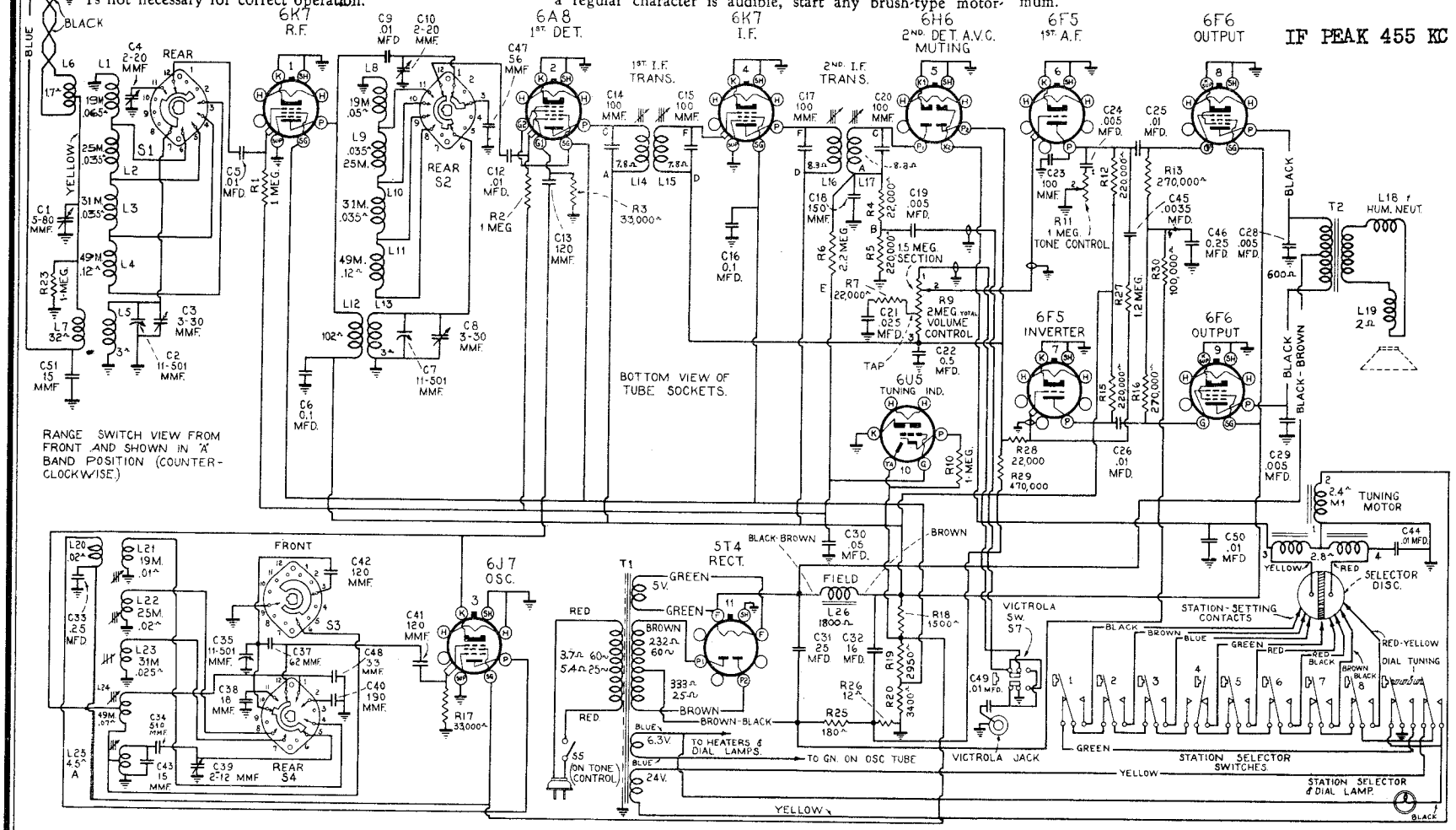

Figure 4—Schematic Circuit Diagram

Precautionary Lead Dress.—

(1) Keep tuning tube cable and the lead from the left pilot light away from the 6F5 grid cap.

(2) Leads on spread-band antenna and r-f coils should be kept short as possible.

(3) Keep black lead from L25 away from C38 and L24.

(4) Keep black lead from L25 to cathode lug on 6J7 away from R17.

(5) The power cord lead and the primary lead of the power transformer which connect to the power switch should be twisted together.

(6) Keep C13 away from the 6A8 control grid lead and from the chassis.

(7) Shielded leads to Victrola jack must be dressed away from switch terminals and jack.

(8) Blue and black leads from antenna board to coils must be twisted.

(9) Black lead and condenser which connect to 6F6 plate should be kept away from inverter grid lead and resistors which connect to it.

MODEL 911K
Chassis Wiring, Transformer Voltage, Specs.

RCA MFG. CO., INC.

This receiver employs an eleven-tube, three-band "Magic Brain" superheterodyne circuit, the arrangement of which is shown in the Schematic Circuit Diagram. Features of design include electric tuning for eight broadcast stations; push-pull power output stage; magnetite-core i-f transformers; magnetite-core "A" band oscillator tracking adjustment; temperature-stabilized capacitors; four spread-bands; automatic volume control; jack and switch for Victrola attachment; "Magic Eye" tuning tube; 12-inch, dust-proof electrodynamic loudspeaker; aural-compensated audio volume control; continuously variable high-frequency tone control; provision for armchair control attachment; new straight-line dial; illuminated band indicator; noise-reducing adjustment on "A" band and noise reduction on "C" band with RCA Victor Master Antenna; air-core trimmer condensers.

Pilot Lamps..... One Mazda 47, 6-8 volts, .15 amp; Two Mazda 44, 6.3 volts, .25 amp.

POWER SUPPLY RATINGS

Rating A..... 105-125 volts, 50-60 cycles, 120 watts
Rating B..... 105-125 volts, 25-30 cycles, 120 watts
Rating C..... 105-125/140-160/195-250 volts, 50-60 cycles, 120 watts

POWER OUTPUT

Undistorted..... 10 watts
Maximum..... 12 watts

LOUDSPEAKER

Type..... 12-inch Electrodynamic
Voice Coil Impedance..... 2.2 ohms at 400 cycles

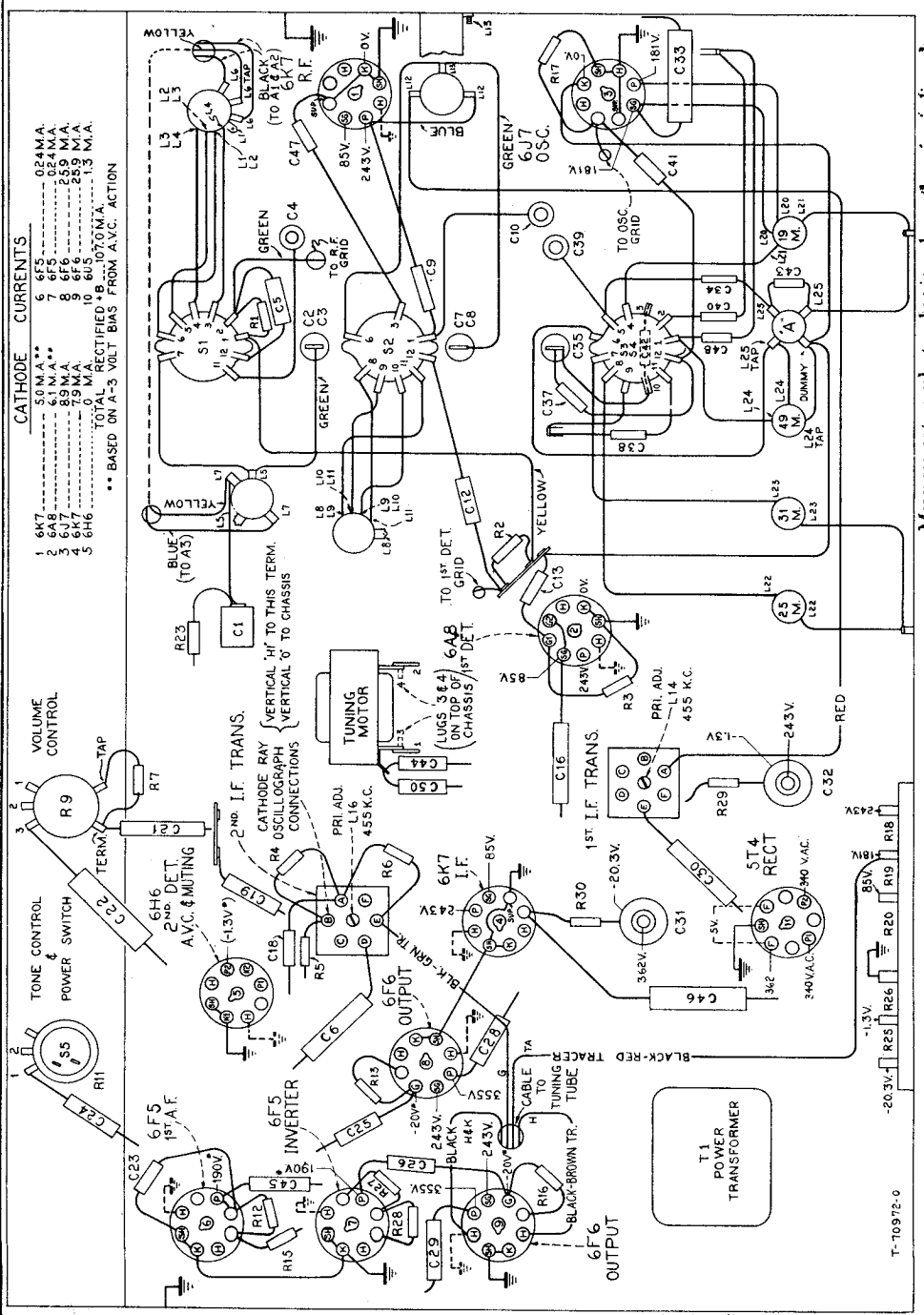

©John F. Rider, Publisher

©John F. Rider, Publisher

Electric Tuning Mechanism

The circuit of the electric tuning mechanism is shown in the schematic diagram, and the mechanical details are illustrated below.

The action can be understood by following a cycle of operation:

When a station button is pushed in, it completes the 24-volt circuit through the corresponding station-setting contact and one-half of the brass selector disc, which is connected to one side of the motor field coil. This energizes the motor, and the rotor is pulled forward, engaging with the gear train that drives the tuning condenser and selector disc. The condenser and disc rotate until the insulation line comes under the particular station-setting contact, and the motor circuit is broken. Inertia carries the insulation line past the station-setting contact which then makes contact to the other half of the disc. This completes the circuit to the other side of the motor field coil, causing the motor to reverse. The floating flywheel is still turning in the original direction and therefore slows down the reversal movement of the motor; as a result the selector disc is moved slowly back until the insulation line is under the station-setting contact, when the circuit is broken and the mechanism stops.

Adjustment of Flywheel Friction

In normal operation, the motor drives the tuning condenser and selector disc until the insulation line just passes the particular station-setting contact: The motor then reverses and moves the disc slowly in the opposite direction until the insulation line is under the contact, and the mechanism stops.

In some cases, particularly with high line-voltage, the disc may make two or three reversals before stopping.

The flywheel friction adjustment screw should be set to give the least number of reversals with the chassis in normal horizontal position.

Adjustment of Selector Disc

The brass selector disc is fastened to the rear shaft of the tuning condenser by means of two set-screws. When the condenser is at maximum (plates fully meshed) the insulation line should be horizontal, with the operating-end at the left (viewed from rear). The operating-end has dark insulating material and the brass is beveled at this end.

The selector disc should be set so that the contact-tip plungers in the station-setting contacts project not more than 1/16-in. from the body of the contacts.

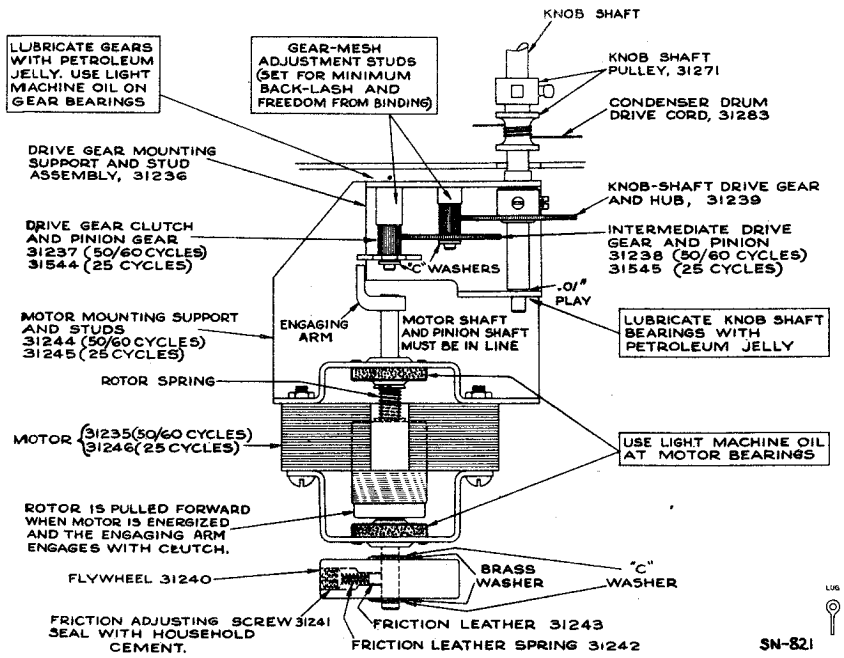

Figure 5—Motor and Gear Mechanism

There must be 1/32-inch clearance between the end of the engaging arm and the face of the intermediate gear when the motor is in its full forward position.

Muting Circuit

When the electric tuning mechanism is in action, the motor-supply voltage is fed into a diode rectifier circuit which applies a high bias to the I-F and first-audio tubes. This prevents audio amplification and makes the set quiet or "mute" while the mechanism is operating.

Lubrication

Motor bearings and **gear bearings;** use light machine oil.

Gear faces; use "Pure Oil No. 611" or petroleum jelly.

Dial-indicator pulleys and **rails;** use "Castordag" or petroleum jelly.

Selector disc; apply *thin* film of petroleum jelly.

Friction leather on flywheel; apply "neats-foot" oil. When replacing leather, soak it for at least 24 hours in neats-foot oil, and insert in flywheel while dripping.

Armchair Control Unit

When a Model G8A Armchair Control is connected to the receiver as shown in figure 7 it duplicates the action of the push-buttons on the front panel when No. 1 button is pressed down. The black lead from push-button No. 1 is unsoldered from No. 1 station-setting contact and soldered to a terminal board which is to be mounted on the frame of selector mechanism. In some cases one of the other seven station buttons on the set may be used in place of No. 1 button for the operation of the Armchair Control.

This arrangement allows the use of only seven of the eight buttons when tuning in stations at the set, but allows the use of the entire eight buttons on the Model G8A Armchair Control. In operating the G8A Armchair Control the push-button must be held down until the station has been tuned in. Care must be taken not to hold two of the station-buttons down at one time as both windings of the motor may be engaged simultaneously causing the motor to be inoperative and overheated.

ADJUSTMENTS FOR ELECTRIC TUNING

1. Make a list of the desired eight stations, arranged in order from low to high frequencies.
2. Turn range selector to "A" band, turn power on, and allow a few minutes for warming up.
3. Press down the "dial-tuning" (right-hand) button.
4. Manually tune in the first station on the list, using the "Magic Eye" for accurate tuning.
5. Hold down the "dial-tuning" button, and press down station button No. 1 (second from left). Both buttons will stay down. Move station-setting contact No. 1 to the insulating line on the disc at rear of gang. When the contact is correctly centered on the insulating line, the central dial lamp will go out.
6. Press down any other button in order to release the dial-tuning button and station button No. 1. Then press down station button No. 1 again. The electric tuning mechanism will function to tune in the station, and the central dial lamp will stay on.
7. Repeat this process for the remaining stations.

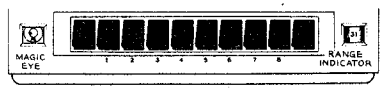

Figure 6—Location of Controls

The left-hand push-button is a Victrola-Attachment switch. The right-hand push-button is for dial tuning.

Figure 7—Station-Setting Contacts and Selector Disc

This illustration shows connections for a G8A Armchair Control Unit. This unit is not supplied with the receiver but may be added as an accessory.

Station Button	Color of Lead To Station-Setting Contact
No. 1	Black
No. 2	Brown
No. 3	Blue
No. 4	Green
No. 5	Red
No. 6	Red-black
No. 7	Brown-black
No. 8	Red-yellow

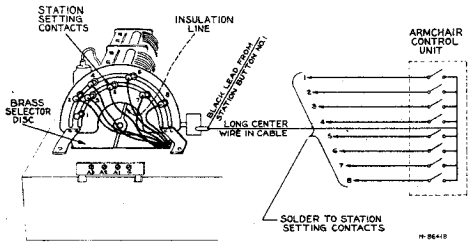

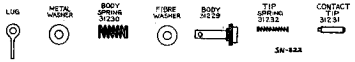

Figure 8—(Above) Component Parts of Station-Setting Contact

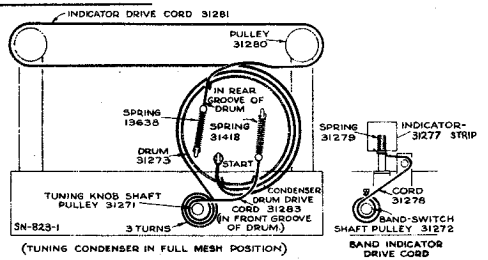

Figure 9—(At Right) Drive Cord Arrangement for Tuning Condenser, Dial Indicator, and Band Switch

©John F. Rider, Publisher

ALIGNMENT PROCEDURE

Cathode-Ray Alignment is the preferable method. Connections for the oscillograph are shown in the chassis drawing.

Output Meter Alignment.—If this method is used, connect the meter across the voice coil, and turn the receiver volume control to maximum.

Test-Oscillator.—For all alignment operations, connect the low side of the test-oscillator to the receiver chassis, and keep the output as low as possible to avoid a-v-c action.

Calibration Scale on Indicator-Drive-Cord Drum.—The tuning dial is fastened in the cabinet and cannot be used for reference during alignment, therefore a calibration scale is attached to the rear of the indicator-drive-cord drum which is mounted on the front shaft of the gang condenser. The setting of the gang condenser is read on this scale, which is calibrated in degrees. The correct setting of the gang in degrees, for each alignment frequency, is given in the alignment table.

As the first step in r-f alignment, check the position of the drum. The "0" mark on the drum scale must be vertical, and directly over the center of the gang-condenser shaft when the plates are fully meshed. The drum is held to the shaft by means of two set screws, which must be tightened securely when the drum is in the correct position.

To determine the corresponding frequency for any setting of the calibration scales, refer to the accompanying drawing which shows the dial with 0-180° calibration scales drawn at top and bottom.

Pointer for Calibration Scale.—Improvise a pointer for the calibration scale by fastening a piece of wire to the gang-condenser frame, and bend the wire so that it points to the "0" mark on the calibration scale when the plates are fully meshed.

Dial-Indicator Adjustment.—After fastening the chassis in the cabinet, attach the dial indicator to the drive cable with indicator at the 530 kc mark, and gang condenser fully meshed. The indicator has a spring clip for attachment to the cable.

Spread-Band Alignment.—The most satisfactory method of aligning or checking the spread-band ranges is on actual reception of short-wave stations of known frequency, by adjusting the magnetite-core oscillator coil for each band so that these stations come in at the correct points on the dial.

In exceptional cases, when the set is being serviced in a location where the noise level is high enough to prevent reception of short-wave stations, a test-oscillator may be used for alignment, but an extremely high degree of accuracy is required in the frequency settings of the test-oscillator, as a slight error will produce considerable inaccuracy on the spread-band dials. The frequency settings of the test-oscillator may be checked by one or both of the following methods:

1. Determine the exact dial settings of the test-oscillator (for frequencies at or close to the specified alignment frequencies) by zero-beating the test-oscillator against short-wave stations of known frequency.
2. Use harmonics of the standard-broadcast range of a test-oscillator, first checking the frequency settings on this range by means of a crystal calibrator (RCA Stock No. 9572), or by zero-beating against standard broadcast stations.

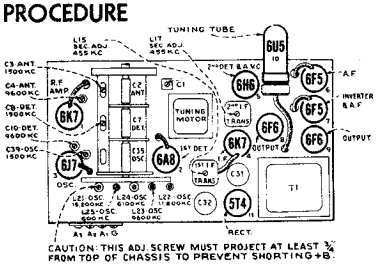

CAUTION: THIS ADJ. SCREW MUST PROJECT AT LEAST ⅜" FROM TOP OF CHASSIS TO PREVENT SHORTING +B.

Figure 2—Tube and Trimmer Locations

When a test oscillator is employed for spread-band alignment, a final check should be made on actual reception of short-wave stations of known frequency, and the magnetite-core oscillator coil for each band should be re-adjusted so that the stations come in at the correct points on the dial.

For additional information, refer to booklet "RCA Victor Receiver Alignment."

Using RCA Stock No. 150 Test Oscillator.—When using this oscillator for spread-band alignment, insert an open-circuit plug in the "EXT. MOD." jack, and set the test-oscillator dial 800 kc lower than the desired frequency for the four lower frequency ranges, and 800 kc higher than the desired frequency for the two high ranges. This provides an unmodulated signal of the desired frequency and the magic eye may be used as an output indicator for this unmodulated signal.

Steps	Connect the high side of test-oscillator to—	Tune Test-Oscillator to—	Range Selector	Set Tuning Gang to—	Adjust the following for max. peak output
No. 1	6K7 I-F grid cap, in series with .01 mfd.	455 kc	"A"	Quiet point between 550-750 kc	L16, L17 (2nd I-F transformer)
No. 2	6A8 1st-det. grid cap, in series with .01 mfd.	455 kc	"A"		L14, L15 (1st I-F transformer)
No. 3	A2, in series with 100 mmf. Connect A3 to chassis.	1,500 kc	"A"	1,500 kc (151.5°)	C39 (osc.) C3 (ant.) C8 (det.)
No. 4	A2, in series with 100 mmf. Connect A3 to chassis.	600 kc	"A"	600 kc (30.0°)	L25 (osc.)
No. 5	A2, in series with 100 mmf. Connect A3 to chassis.	1,500 kc	"A"	1,500 kc (151.5°)	C39 (osc.)
No. 6	A2. Connect A1 to chassis.	6,100 kc	"49M"	6,100 kc (106°)	L24 (osc.)*
No. 7	A2. Connect A1 to chassis.	9,600 kc	"31M"	9,600 kc (102°)	L23 (osc.)** C4 (ant.) C10 (det.)
No. 8	A2. Connect A1 to chassis.	11,800 kc	"25M"	11,800 kc (90.0°)	L22 (osc.)**
No. 9	A2. Connect A1 to chassis.	15,200 kc	"19M"	15,200 kc (78.0°)	L21 (osc.)**

* Use maximum inductance peak (plunger in) if two peaks can obtained.

** Use minimum inductance peak (plunger out) if two peaks can be obtained.

Note that the heterodyne oscillator tracks above the signal frequency on all bands except "49M," where it is lower than the signal frequency.

REPLACEMENT PARTS

Insist on genuine factory-tested parts, which are readily identified and may be purchased from authorized dealers.

STOCK No.	DESCRIPTION	Unit List Price
	RECEIVER ASSEMBLIES	
31253	Board—Antenna and ground terminal board	.25
31229	Body—Station-setting contact body, less contact tip and tip spring	.18
12714	Capacitor—Adjustable trimmer, 2-12 mmfd. (C39)	.50
12884	Capacitor—Adjustable trimmer, 2-20 mmfd. (C4, C10)	.50
31252	Capacitor—Adjustable trimmer, 5-80 mmfd. (C1)	.25
31353	Capacitor—15 mmfd. (C43)	.40
12898	Capacitor—15 mmfd. (C51)	.35
31350	Capacitor—18 mmfd. (C38)	.30
31354	Capacitor—33 mmfd. (C48)	.70
12723	Capacitor—56 mmfd. (C47)	.35
31349	Capacitor—62 mmfd. (C37)	.30
12720	Capacitor—100 mmfd. (C23)	.35
31270	Capacitor—100 mmfd. (C14, C15, C17, C20)	.35
12724	Capacitor—120 mmfd. (C13, C41)	.35
31352	Capacitor—120 mmfd. (C42)	.30
12725	Capacitor—150 mmfd. (C18)	.35
31351	Capacitor—190 mmfd. (C40)	.30
31348	Capacitor—510 mmfd. (C34)	.35
30303	Capacitor—.0035 mfd. (C45)	.40
4838	Capacitor—.005 mfd. (C19, C24, C28, C29)	.25
14393	Capacitor—.01 mfd. (C5, C12, C25, C26, C44, C49, C50)	.30
4858	Capacitor—.01 mfd. (C9)	.25
4870	Capacitor—.025 mfd. (C21)	.20
4886	Capacitor—.05 mfd. (C30)	.20
4839	Capacitor—0.1 mfd. (C6, C16)	.30
12484	Capacitor—0.25 mfd. (C33, C46)	.30
30867	Capacitor—0.5 mfd. (C22)	.30
5212	Capacitor—1.6 mfd. (C27)	1.35
14531	Capacitor—25 mfd. (C31)	1.55
31544	Clutch—Variable condenser drive gear clutch and pinion gear—engages pin on motor shaft—25 cycle models only	.45
31237	Clutch—Variable condenser drive gear clutch and pinion gear—engages pin on motor shaft, 50/60 cycle models only	.35
31263	Coil—"A" band antenna coil (L5, L7)	.95
31257	Coil—"A" band oscillator coil (L25)	.55
31265	Coil—"A" band detector coil (L12, L13)	1.20
31264	Coil—19, 25, 31, and 49 meter bandspread antenna coil (L1, L2, L3, L4, L6)	1.35
31266	Coil—19, 25, 31, and 49 meter bandspread detector coil (L6, L8, L10, L11)	.95
31268	Coil—19 meter band oscillator coil (L20, L21)	.45
31254	Coil—25 meter band oscillator coil (L22)	.40
31255	Coil—31 meter band oscillator coil (L23)	.40
31256	Coil—49 meter band oscillator coil (L24)	.50
31234	Condenser—3-gang variable condenser (C2, C3, C7, C8, C35)	6.45
31231	Contact—Contact tip for station-setting contact	.06
31260	Core—Adjustable core and stud for "A" band oscillator coil	.35
31269	Core—Adjustable core and stud for i-f transformer	.15
31259	Core—Adjustable core and stud for 19, 25, 31 or 49 meter band oscillator coils	.15
31273	Drum—Indicator drive cord drum	.80
31240	Flywheel—Variable condenser drive motor flywheel	.25
31545	Gear—Variable condenser intermediate drive gear and pinion gear, 25 cycle models only	.40
31238	Gear—Variable condenser intermediate drive gear and pinion gear, 50/60 cycle models only	.50
31239	Gear—Variable condenser knob shaft drive gear and hub	.65
11891	Lamp—Dial lamp	.17
31480	Lamp—Electric tuning adjustment indicator lamp	.20
31243	Leather—Friction leather for flywheel	.04
31246	Motor—Variable condenser drive motor (M-1) —25 cycle models only	6.50
31235	Motor—Variable condenser drive motor (M-1) —50/60 cycle models only	4.85
31228	Plate—Selector contact plate—less contacts	.45
31227	Plate—Selector mounting plate—mounts on rear of variable condenser	.50
5040	Plug—4-contact female for speaker cable	.30
31271	Pulley—Motor pulley	.25
31272	Pulley—Range switch pulley	.20
31250	Resistor—Voltage divider comprising one 1,500 ohms, one 2,950 ohms, one 3,400 ohms, one 12 ohms, and one 180 ohms sections (R18, R19, R20, R25, R26)	.90
14284	Resistor—22,000 ohms, 1/10 watt (R4, R7, R28)	.15
11300	Resistor—33,000 ohms, 1/10 watt (R3, R17)	.15
11281	Resistor—100,000 ohms, 1/10 watt (R30)	.15
11298	Resistor—220,000 ohms, 1/10 watt (R12, R15)	.15
12264	Resistor—220,000 ohms, ½ watt (R5)	.20
11453	Resistor—270,000 ohms, 1/10 watt (R13, R16)	.15
11452	Resistor—470,000 ohms, 1/10 watt (R29)	.15
12013	Resistor—1 meg., 1/10 watt (R2, R10)	.15
13730	Resistor—1 meg., ½ watt (R1, R23)	.20
31056	Resistor—1.2 meg., 1/10 watt (R27)	.15
5131	Resistor—2.2 meg., 1/10 watt (R6)	.15
31233	Rotor—Selector rotor disc—mounts on rear of variable condenser shaft	1.16
31241	Screw—¼ x 20 headless, cone point set screw for flywheel	.02
14350	Screw—No. 8-32 square head set screw for selector rotor disc	.03
4119	Screw—No. 8-32 headless set screw for gear, Stock No. 31239	.02
4669	Screw—No. 8-32 square head set screw for pulley, Stock Nos. 31271 and 31272, and drum, Stock No. 31273	.03
31364	Socket—Dial lamp socket	.20
13871	Socket—Magic Eye socket	.45
31251	Socket—Radiotron socket	.25
31365	Socket—Tuning indicator lamp insulated socket	.30
31232	Spring—Contact tip spring for station-setting contact	.01
12007	Spring—Retaining spring for core, Stock No. 31269	.02
31230	Spring—Station-setting contact body spring	.01
31261	Spring—Tension spring for core, Stock No. 31259	.01
31262	Spring—Tension spring for core, Stock No. 31260	.01
31242	Spring—Tension spring for flywheel	.01
31245	Support—Variable condenser motor mounting support and studs—for 25 cycle models only	.70
31244	Support—Variable condenser motor mounting support and studs—for 50-60 cycle models only	.45
31236	Support—Variable condenser drive gear mounting support and studs assembly	.65
31247	Switch—Range switch (S1, S2, S3, S4)	2.20
31248	Tone Control—H-f tone control and power switch (R11, S5)	1.50
31267	Transformer—First i-f transformer (L14, L15, C14, C15)	2.20
31288	Transformer—Second i-f transformer (L16, L17, C17, C20)	2.05
31226	Transformer—Power transformer, 110 volts, 25-60 cycle (T1)	13.00
31225	Transformer—Power transformer, 110 volts, 50-60 cycle (T1)	8.50
31249	Volume Control (R9)	1.50
	SPEAKER ASSEMBLIES (Speaker RL70F-4)	
13866	Cap—Dust cap for cone center	.03
11234	Coil—Field coil (L26)	3.85
11469	Coil—Neutralizing coil (L18)	.30
31275	Cone—Speaker cone and voice coil (L19)	1.75
5039	Plug—4-contact male plug for speaker	.30
31274	Speaker—Complete	12.00
14534	Transformer—Output transformer (T2)	3.85
14357	Washer—Spring washer to hold field coil securely	.06
	MISCELLANEOUS ASSEMBLIES	
31276	Bracket—Band indicator mounting bracket complete except less band indicating strip, cord, and tension spring	.40
31282	Bracket—Magic Eye bracket and holder	.22
31358	Button—Station selector switch push button	.15
31344	Connector—Push button switch contacts—comprising 13 contacts riveted on insulating strip	1.20
31345	Contact—Push button switch contacts—comprising 10 contacts riveted on insulating strip	.70
31278	Cord—Band indicator drive cord	.12
31281	Cord—Indicator pointer drive cord	.50
31283	Cord—Variable condenser drum drive cord	.20
31456	Cover—8 protective covers for push button markers	.08
31359	Cushion—Station selector push button rubber cushion	.08
31363	Dial—Station selector dial and crystal	1.65
31362	Escutcheon—Station selector dial escutcheon—less dial scale and push buttons	2.65
31277	Indicator—Band indicator strip	.15
31284	Indicator—Station selector indicator pointer	.35
31355	Knob—Range switch, tone control, volume control, or station selector knob	.12
31346	Lock-Plate—Push button switch lock-plate—comprising 10 contact locks in one strip	.80
31589	Marker—Station call letter markers for push buttons	.35
31457	Marker—"Victrola" marker for push button	.01
31458	Marker—"Dial Tuning" marker for push button	.01
31280	Pulley—Indicator pointer drive cord pulley	.10
14887	Retainer—Indicator pointer drive cord pulley retainer	.01
31285	Screen—Station selector dial color screen and light diffuser	.75
11210	Screw—Chassis mounting screws, washers, and lockwashers for 1 chassis	.05
3993	Screw—No. 8-32 square head set screw for pointer slide stop	.05
31287	Shaft—Indicator pointer slide shaft	.15
31286	Slide—Indicator pointer carriage and clip	.22
31347	Socket—Pickup socket and bracket	.30
13638	Spring—Indicator pointer drive cord tension spring	.08
31418	Spring—Variable condenser drive cord tension spring	.05
31279	Spring—Tension spring for band indicator	.03
31313	Spring—Tension spring for station selector push button switch latch bar	.06
14270	Spring—Retaining spring for knob, Stock No. 31355	.05
31288	Stop—Indicator pointer slide stop	.20
31360	Switch—Pickup switch for mounting on push-button switch assembly (S7)	2.70
31212	Switch—Station selector push-button switch and bracket assembly, complete	4.25
	ANTENNA ASSEMBLIES	
31426	Counterpoise Line—Additional length 60 ft. long	1.35
12426	Insulator—Strain and counterpoise insulator	.05
9816	Transmission Line—Additional length 60 ft. long	1.50

ALL PRICES ARE SUBJECT TO CHANGE OR WITHDRAWAL WITHOUT NOTICE.

MODELS 5E,55
Alignment

RADIO PRODUCTS CORP.

MODEL 4A
Schematic, Socket
Trimmers, Alignment

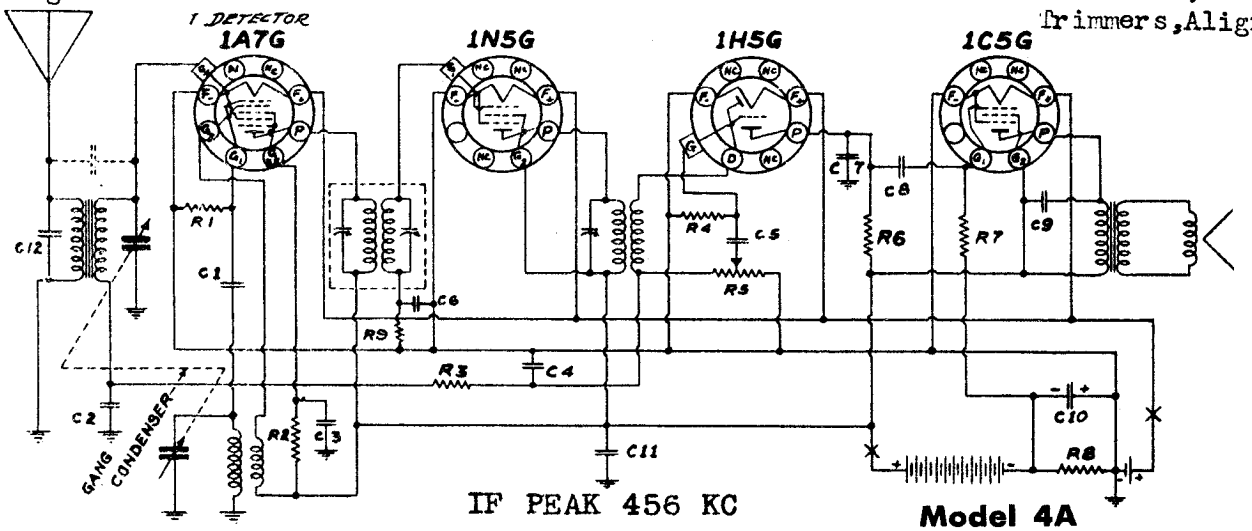

IF PEAK 456 KC

Model 4A

CORRECT ALIGNMENT PROCEDURE The intermediate frequency (I.F.) stage should be aligned properly as the first step. After the I.F. transformers have been properly adjusted and peaked, the Broadcast Band alignment should be the next procedure.

I.F. ALIGNMENT Adjust the test oscillator to 456 KC and connect the output to the grid of the first detector tube through a .05 or .1 mfd. condenser. The ground on the test oscillator can be connected to the chassis ground. Align all three I.F. trimmers to peak or maximum reading on the output meter.

BROADCAST BAND ALIGNMENT Adjust the oscillator to 1730 KC and connect the output to the antenna lead (Blue) through a *.0002 mfd. mica condenser. Set the gang condenser to minimum capacity and adjust the gang condenser trimmer (oscillator) to receive this signal. After this has been carefully done, the next step is to set the generator to 1400 KC and after tuning in the signal adjust the antenna trimmer to peak. This is all that is necessary for the alignment unless the plates of the gang condenser have been bent out of shape. In case of bent plates, set the test oscillator and the receiver to 600 KC and bend the plates into the position for maximum sensitivity over the tuning range.

*50 MMF. (MODEL 55)

RESISTORS

No	OHMS	WATTS
R1	200,000	½
R2	70,000	½
R3	1 MEG.	½
R4	2 MEG.	½
R5	500,000	VOL.
R6	250,000	½
R7	500,000	½
R8	600	½
R9	2 MEG.	½
CONTROL		

CAPACITORS

No	CAP.-MFDS.	TYPE
C1	.00025	MICA
C2	.05	200V.
C3	.1	200V.
C4	.00025	MICA
C5	.01	400V.
C6	.002	400V.
C7	.00025	MICA
C8	.01	400V.
C9	.005	400V.
C10	20. (ELECT)	25V.
C11	.1	200V.
C12	.00005	MICA

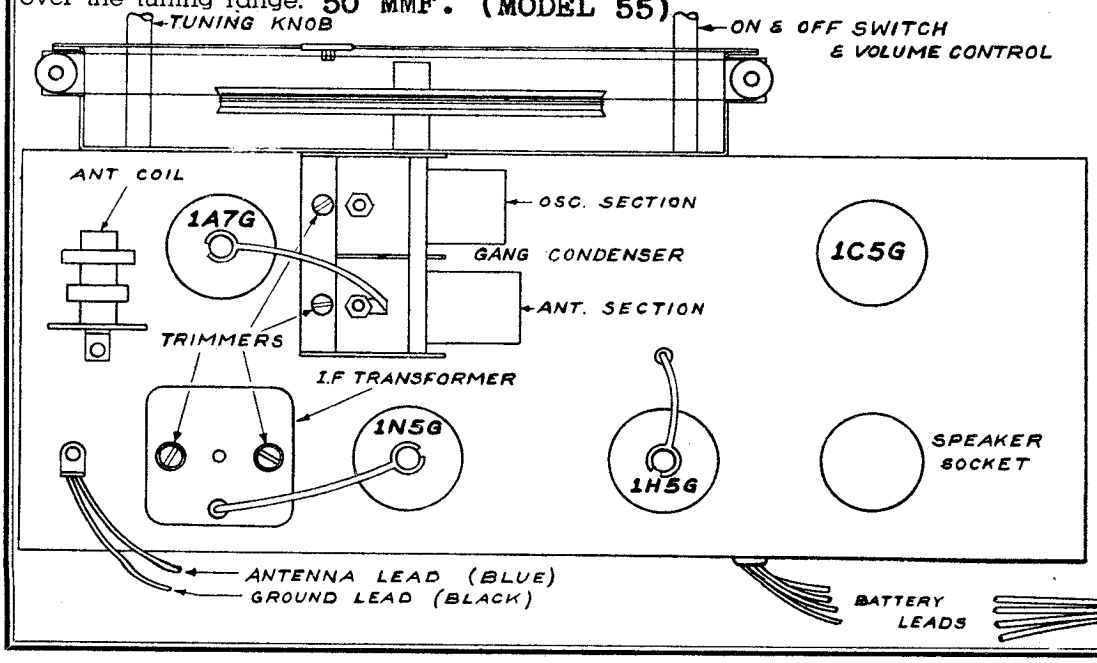

4 TUBE 1½ VOLT "AB" BATTERY SUPERHETERODYNE
RANGE 535 - 1730 KILOCYCLES

This receiver is designed to operate on a single unit "Ray-o-vac" No. AB82 Dry "AB" Battery or equivalent. No other batteries are required as this battery is a combination 90 volt "B" battery and 1½ volt "A" battery.

IT IS ABSOLUTELY NECESSARY THAT A GOOD GROUND BE EMPLOYED WITH THIS TYPE OF RECEIVER.

POWER SUPPLY

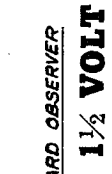

©John F. Rider, Publisher

MODEL Z4 Chassis
Schematic, Socket
Trimmers, Alignment

RADIO PRODUCTS CORP.

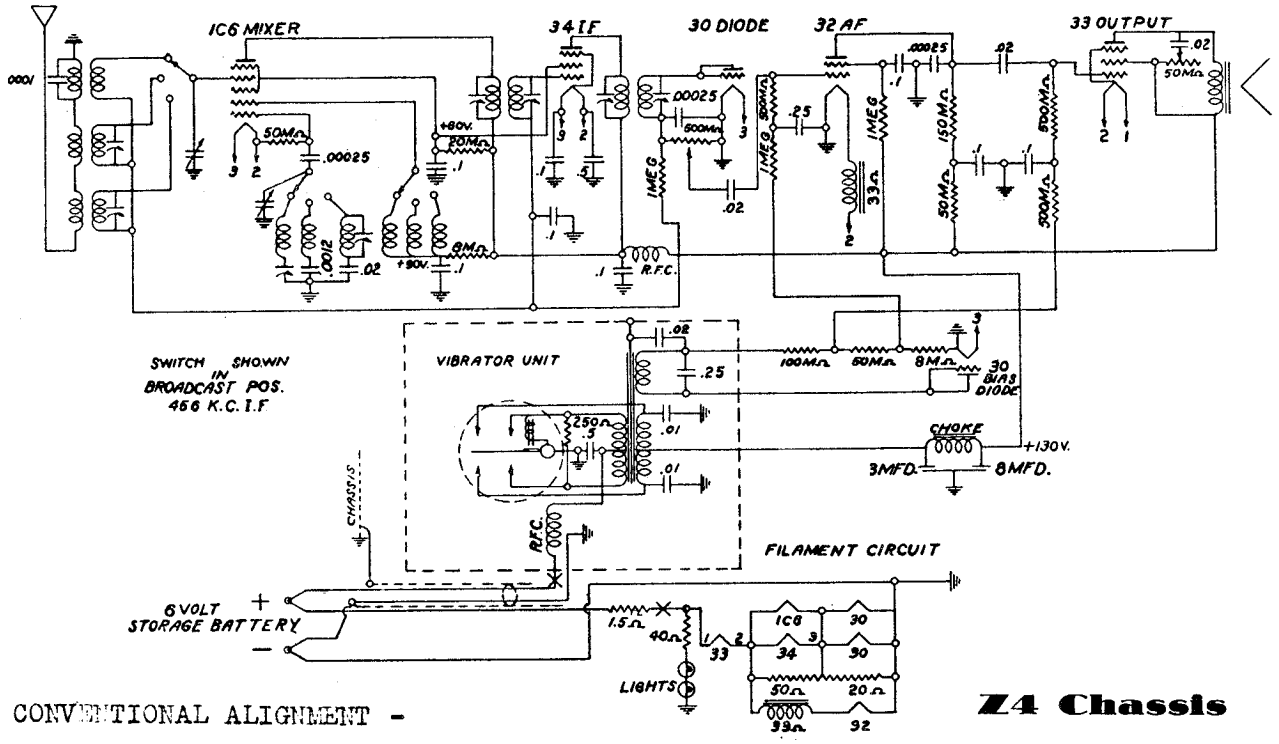

Z4 Chassis

CONVENTIONAL ALIGNMENT -
SEE SPECIAL SECTION VOL. VIII

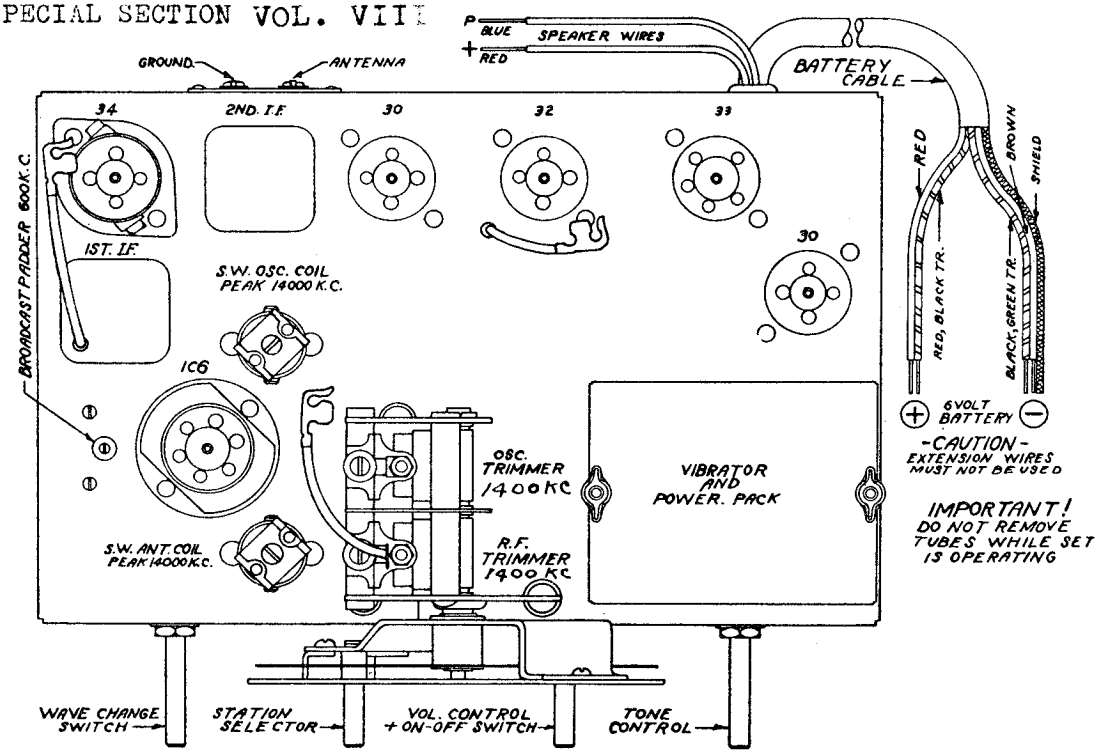

FREQUENCY RANGES - BROADCAST-540 to 1700 KC, Peak gang condenser OSC trimmer then gang condenser RF trimmer to maximum on 1400 KC. Pad Oscillator at 600 KC.
SHORTWAVE -Peak Osc and RF trimmers to 14000 KC, check for weaker image frequency at 13100 KC. No padding required.
POLICE - Adjust antenna coil trimmer to 4000 KC. No padding.

©John F. Rider, Publisher

RADIO PRODUCTS CORP.

MODEL 5A
Schematic, Socket Trimmers, Alignment Tuner Data

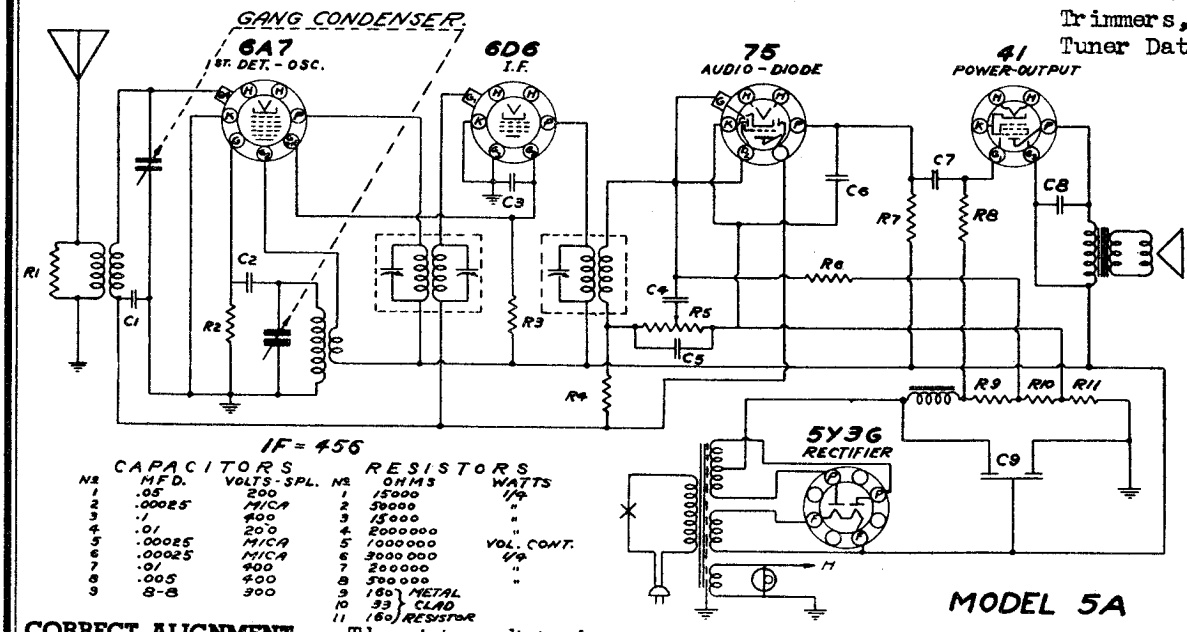

CAPACITORS

No.	MFD.	VOLTS - SPL.
1	.05	200
2	.00025	MICA
3	.1	400
4	.01	200
5	.00025	MICA
6	.00025	MICA
7	.01	400
8	.005	400
9	8-8	300

RESISTORS

No.	OHMS	WATTS
1	15000	1/2
2	50000	"
3	15000	"
4	2000000	"
5	1000000	VOL. CONT.
6	3000000	1/2
7	200000	"
8	500000	"
9	100 }	METAL
10	93 }	CLAD
11	160 }	RESISTOR

MODEL 5A

Wherever possible, a good ground should be employed. Water pipes and steam or hot water radiators make a very desirable ground connection. The ground wire should be connected to the "Black" lead.

CORRECT ALIGNMENT PROCEDURE The intermediate frequency (I.F.) stage should be aligned properly as the first step. After the I.F. transformers have been properly adjusted and peaked, the Broadcast Band alignment should be the next procedure.

I.F. ALIGNMENT Adjust the test oscillator to 456 KC and connect the output to the grid of the first detector tube (6A7) through a .05 or .1 mfd. condenser. The ground on the test oscillator can be connected to the chassis ground. Align all three I.F. trimmers to peak or maximum reading on the output meter.

BROADCAST BAND ALIGNMENT Adjust the oscillator to 1730 KC and connect the output to the antenna lead (Blue) through a .0002 mfd. mica condenser. Set the gang condenser to minimum capacity and adjust the gang condenser trimmer (oscillator) to receive this signal. After this has been carefully done, the next step is to set the generator to 1400 KC and after tuning in the signal adjust the antenna trimmer to peak. This is all that is necessary for the alignment unless the plates of the gang condenser have been bent out of shape. In case of bent plates, set the test oscillator and the receiver to 600 KC and bend the plates into the position for maximum output.

PROCEDURE FOR SETTING UP AND OPERATING AUTOMATIC PUSH BUTTONS

Select four strong local stations tuned in regularly. Now loosen **Locking Screw** (see chassis layout) several turns with a coin or a screw driver and press in any one of the four push buttons. Holding the button down, tune in any one of four selected stations by rotating the tuning knob (side knob) slowly back and forth until the signal is cleared.

Release the push button and press in another button and hold down, tuning in another favorite station with tuning knob. Follow the same procedure for the remaining stations. Now hold tuning knob (side knob) securely and with coin or screw driver, tighten locking screw. This screw holds all stations in adjustment.

In order to change any station already set up, to another, hold tuning knob securely, loosen locking screw and select the new station as explained above. Tear the correct station call letter tabs from the set of sheets supplied and push them into rectangular windows above each push button.

The automatic push button dial is now set up for quick tuning.

Five Tube A.C. Superheterodyne

535 to 1735 kilocycles single band.

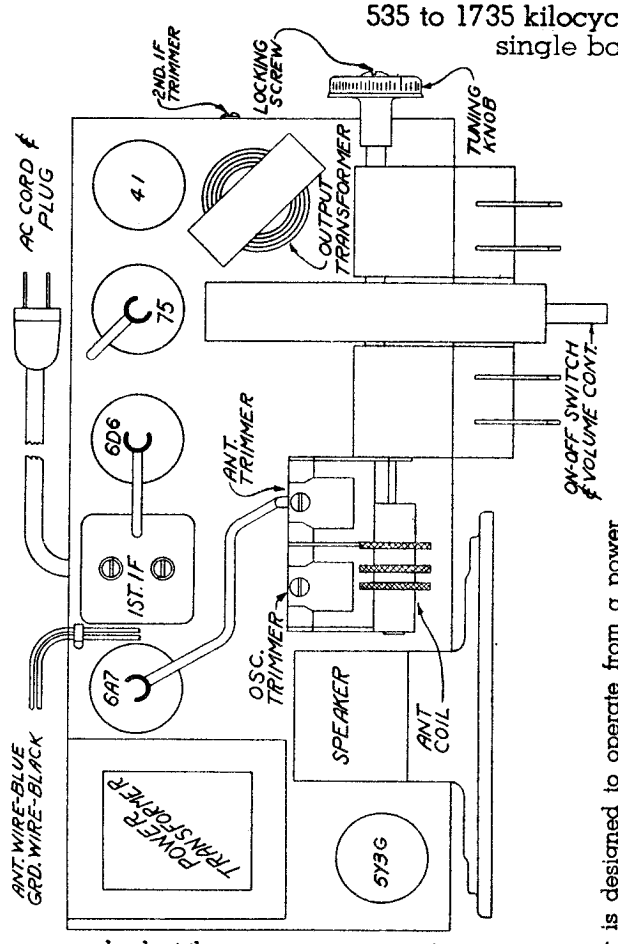

5A Chassis

This receiver is designed to operate from a power supply main of 110-120 volts, 60 cycle alternating current (AC). **Never plug into a DC outlet.**

©John F. Rider, Publisher

MODEL 5C
MODEL 5CPH
Schematics, Sockets
Trimmers, Alignment

RADIO PRODUCTS CORP.

MODEL 5C - 5 TUBE T.R.F. AC (60 CYCLES) OR DC AT 105 - 125 VOLTS.

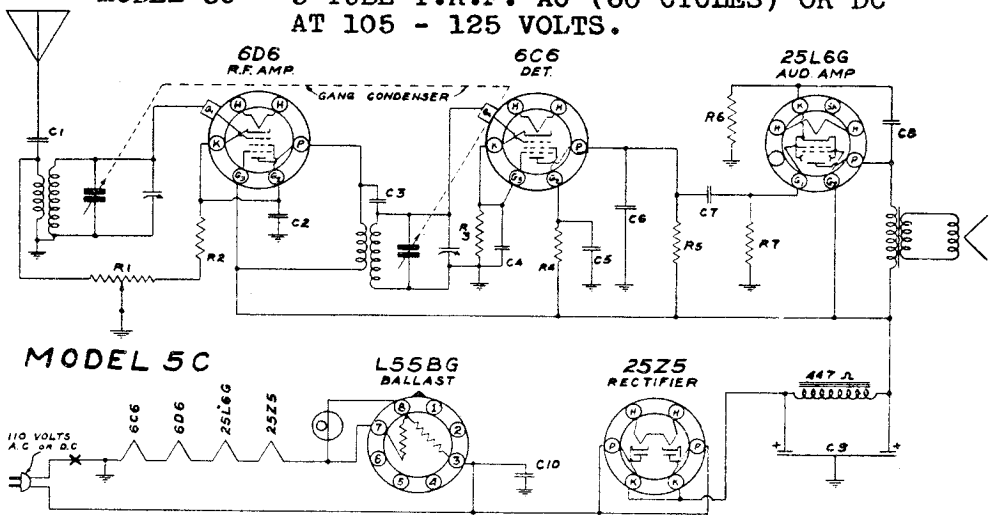

THESE VALUES REFER TO BOTH SCHEMATICS.

RESISTORS	OHMS	WATTS	
R1	15,000	½	VOL. CONT.
R2	250	½	
R3	25,000	½	
R4	2,000,000	½	
R5	300,000	1	WIRE WOUND
R6	110	1	
R7	500,000	½	
R8	1,000,000	½	
R9	250,000	½	PHONO VOL. CONT.
R10	500,000	½	

CONDENSERS	CAPACITY	TYPE
C1	.002 MFD.	400 V.
C2	.1 "	200 V.
C3	1.5 mf.	GIMMIK
C4	.25 MM.	200 V.
C5	.1 "	200 V.
C6	.0002 "	600 V.
C7	.01 "	400 V.
C8	.02 "	400 V.
C9	16-16 "	150 V. ELECT.
C10	.1 "	600 V.
C11	.005 "	600 V.

MODEL 5CPH - 5 TUBE T.R.F. AC ONLY 60 CYCLES AT 105 - 125 VOLTS.

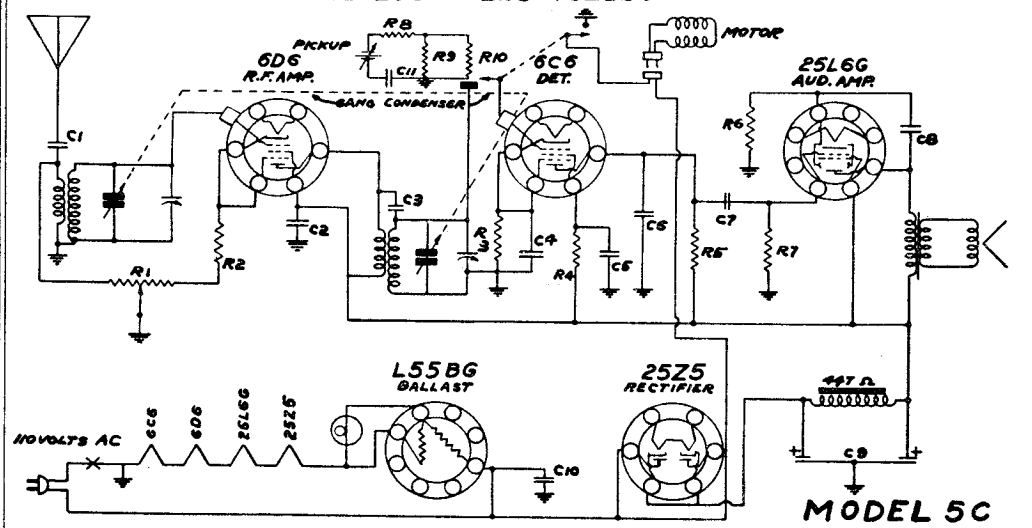

MODEL 5C
PHONO COMBINATION

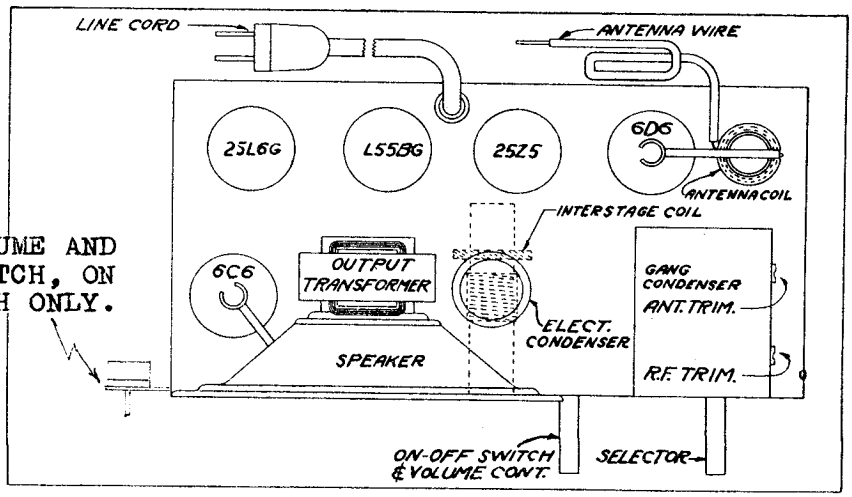

PHONO VOLUME AND MOTOR SWITCH, ON MODEL 5CPH ONLY.

NOTES ON BOTH MODELS (5C AND 5CPH).
CAUTION: NEVER USE A GROUND ON THESE RECEIVERS.
RANGE: 535 - 1750 KILOCYCLES.

ALIGNMENT DATA AND SERVICING

Connect a signal generator to the antenna lead of the receiver through a 100 Mmf. condenser. Set the dial pointer at 1400 KC. Set the generator at 1400 KC. Now adjust the antenna and RF trimmers of the gang condenser to maximum output.

©John F. Rider, Publisher

RADIO PRODUCTS CORP.

MODEL 5E
Schematic, Socket
Trimmers, Alignment

FOR ALIGNMENT PROCEDURE SEE MODEL 4A.

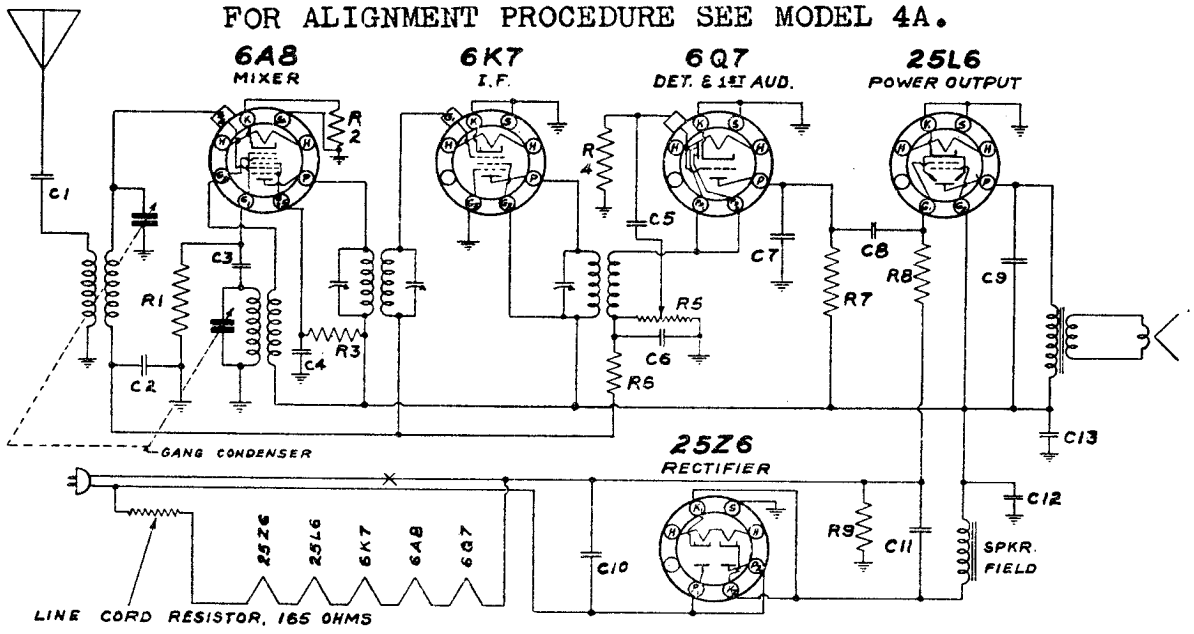

RESISTORS

No	OHMS	WATTS	SPL.
R1	50,000	1/8	
R2	110	1/4	
R3	40,000	1/2	
R4	15 Meg.	1/4	
R5	500,000		VOL. CONT.
R6	2 Meg.	1/4	
R7	250,000	1/2	
R8	500,000	1/2	
R8	150	1/2	±10%

CONDENSERS

No	Mfd.	TYPE
C1	.000250	MICA
C2	.02	400V.
C3	.000030	MICA
C4	.01	400V.
C5	.01	300V.
C6	.00025	MICA
C7	.0005	MICA
C8	.01	400V
C9	.035	600V.
C10	.05	400V.
C11	30.	150V.
C12	10.	150V.
C13	.05	200V.

I.F. - 456 K.C.

SCHEMATIC DIAGRAM
MODEL 5E

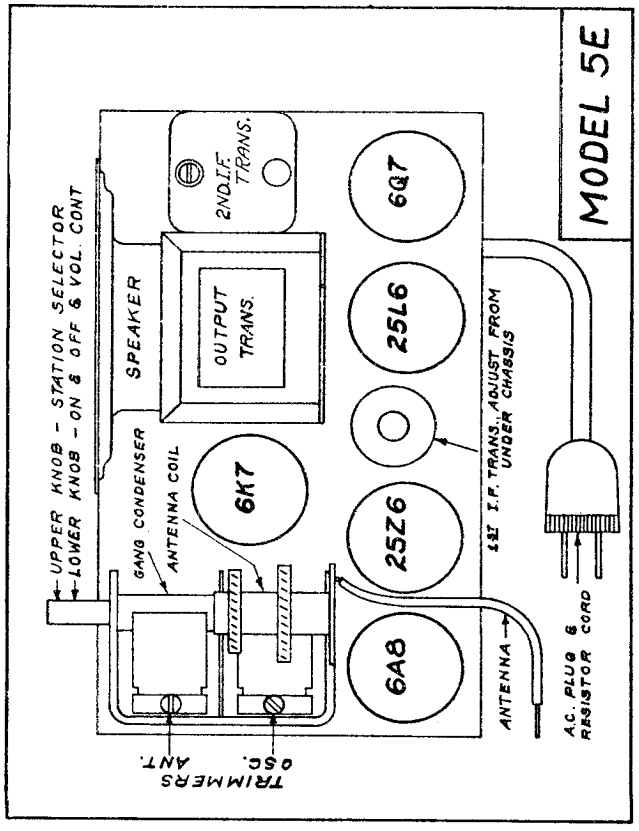

5 TUBE
BROADCAST BAND A.C.-D.C. SUPERHETERODYNE
RANGE 535 - 1730 KILOCYCLES

POWER SUPPLY This receiver is designed to operate from any AC (Alternating Current) or DC (Direct Current) power supply main of 105-125 volts, 60 cycle. If the receiver fails to operate on DC (direct current), reverse the power line plug.

Note: Do not attempt to ground this receiver as one side of the power line acts as the ground. Any external ground connection to the chassis will cause a short and consequent damage.

©John F. Rider, Publisher

MODEL L5 Chassis
Schematic, Socket
Trimmers, Alignment

RADIO PRODUCTS CORP.

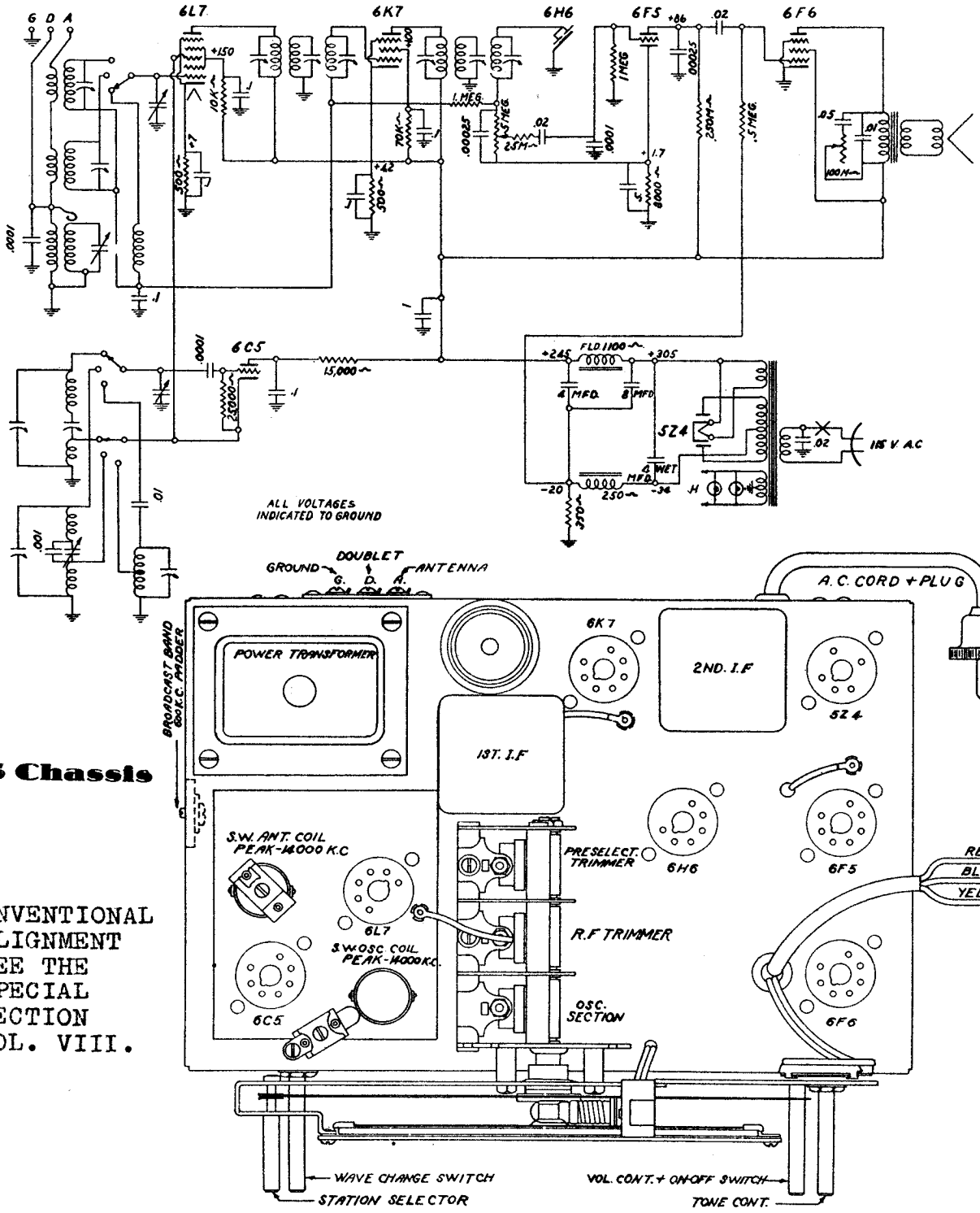

L5 Chassis

CONVENTIONAL ALIGNMENT SEE THE SPECIAL SECTION VOL. VIII.

FREQUENCY RANGES - BROADCAST-540 to 1700 KC - Adjust OSC, RF and ANT trimmers on gang condenser to a maximum peak of 1400 KC, then pad the OSC circuit at 600 KC while rocking gang condenser.

SHORTWAVE -5800 to 15200 KC - Adjust OSC and ANT trimmers to a maximum peak of 14000 KC., no other adjustments.

POLICE - 1700 to 5000 KC - Adjust the RF ANT trimmer on coil to resonance at 4000 KC, no other adjustments.

©John F. Rider, Publisher

MODEL 7A
Alignment

RADIO PRODUCTS CORP.

MODEL 6D
Schematic, Socket
Trimmers, Alignment

Six Tube 6 Volt Battery Dual Wave Superheterodyne

This receiver is designed to operate over two tuning ranges; from 535 to 1730 Kilocycles (KC) (173.4 to 561 meters), and from 5650 to 18,100 Kilocycles (KC) (16.5 to 53 Meters).

This receiver requires a good ground.

SWITCHES IN BROADCAST POSITION

I.F. 456 K.C.

RESISTORS

No.	OHMS	WATTS	SPL. TOL. ± 10%
1	250		
2	15,000		
3	1 MEG		
4	500,000		(VOL. CONT.)
5	150,000		
6	150,000		± 10%
7	500,000		
8	600,000		± 10%
9	400,000		
10	100,000		
11	40,000		
12	180		
13	150		

CONDENSERS

No.	CAP. - MFD.	TYPE
1	.05	200 V.
2	.25	200 V.
3	.1	200 V.
4	.00025	MICA
5	.01	400 V.
6	.00025	MICA
7	.01	400 V.
8	.05	200 V.
9	.005	600 V.
10	.02	400 V.
11	.1	200 V.
12	.00005	MICA
13	.004 (± 5%)	MICA
14	.006	500 V.
15	.006	500 V.
16	.006	500 V.
17	.015	1000 V.
18	.01	400 V.
19	8 - 8 CCCW	200 W.V.

CORRECT ALIGNMENT PROCEDURE

The intermediate frequency I.F. stage should be aligned properly as the first step. After the I.F. transformers have been properly adjusted and peaked, the Broadcast Band should always be the next procedure; after which, the Short Wave Band may be aligned.

Note: Approximately the same sensitivity should be noted at this point as was at 1400 KC. The signal strength may sometimes be improved by padding the circuits. This is done by slowly increasing or decreasing the oscillator padding condenser and, at the same time, continuously tuning back and forth across the signal with the receiver until the maximum reading is obtained on the output meter. This adjustment may seem a little complicated but is the easiest way to adjust the oscillator to the antenna. Return the gang condenser to minimum and the oscillator to 1730 KC and adjust the Broadcast "oscillator trimmer" to receive this signal. Make no other adjustments at this frequency. Then set the generator to 1400 KC and tune in this signal by rotating the gang to 1400 on the dial. Adjust the Broadcast "antenna" trimmer to a maximum signal. Set the signal generator to 600 KC and tune in the signal on the receiver.

I.F. ALIGNMENT

With the wave switch in the broadcast band and the gang condenser set at minimum, adjust the test oscillator to 456 KC and connect the output of test oscillator or signal generator to the grid of the first detector tube (6A8G) through a .05 or .1 mfd. condenser. The ground on the test oscillator can be connected to the chassis ground. Align all four I.F. trimmers to peak or maximum reading on the output meter.

BROADCAST BAND ALIGNMENT

Connect the output of the signal generator to the antenna lead (blue) through a .0002 mfd. mica condenser. Set the gang condenser to minimum and the oscillator to 1730 KC and adjust the Broadcast "oscillator trimmer" to receive this signal. Make no other adjustments at this frequency. Then set the generator to 1400 KC and tune in this signal by rotating the gang to 1400 on the dial. Adjust the Broadcast "antenna" trimmer to a maximum signal. Set the signal generator to 600 KC and tune in the signal on the receiver.

SHORT WAVE BAND ALIGNMENT

The short wave band is adjusted by setting the generator to 16,000 KC and tuning in the signal. Adjust the "short wave antenna" trimmer to give maximum output. As there is no variable low frequency padding condenser, should be tested for defects as sometimes these components become subject to mechanical or electrical injuries, despite their rugged construction and liberal ratings.

©John F. Rider, Publisher

MODEL 7A
Schematic, Socket
Trimmer

RADIO PRODUCTS CORP.

Seven Tube Combination 6 Volt Battery and 110-120 Volt AC 60 Cycle Dual Wave Superheterodyne

ALIGNMENT:
FOLLOW PROCEDURE OF MODEL 6D, BUT USE 18,100 AND 6000 KC FOR S.W.

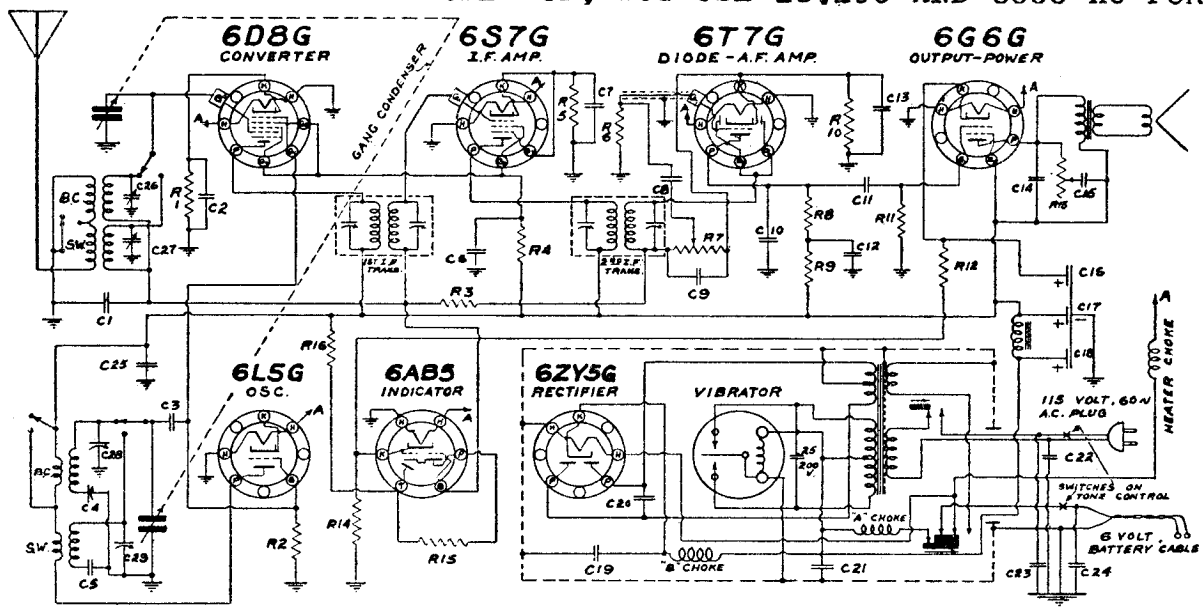

This receiver requires a good ground.

CONDENSERS

№	CAPACITY	TYPE	№	CAPACITY	TYPE
1	.05 Mfd.	200 V.	14	.005 Mfd.	600 V.
2	.05 Mfd.	200 V.	15	.05 "	400 V.
3	50 mmf.	MICA	16	5 "	25 V.
4	300-600 mmf	MICA	17	8. "	200 V.
5	4000 mmf	M. ±5%	18	8. "	200 V.
6	.1 Mfd.	200 V.	19	.01 "	600 V.
7	.05 "	200 V.	20*	.015 "	1000 V.
8	.01 "	400 V.	21	.5 "	10 V.
9	250 mmf	MICA	22	.05 "	400 V.
10	250 "	"	23	.01 "	600 V.
11	.01 Mfd.	400 V.	24	.5 "	10 V.
12	.1 "	200 V.	R5	.1 "	200 V.
13	.5 "	200 V.		* OIL TYPE	

RESISTORS

№	OHMS	WATTS	SPL. TOL.
1	1500	½	± 10%
2	40,000	½	± 10%
3	1,000,000	½	
4	30,000	½	
5	1,500	½	± 10%
6	1,000,000	½	
7	500,000	½	(VOL. CONT.)
8	500,000	½	
9	200,000	½	
10	10,000	½	± 10%
11	500,000	½	
12	325	½	± 10%
13	100,000	½	(TONE CONT.)
14	110	¼	± 10%
15	250,000	¼	
16	15,000	¼	

BAND SWITCH IN BROADCAST POSITION
POWER SWITCH IN BATTERY POSITION.
I.F. - 456 K.C.
C26 TO C29, 2-20 mmf TRIMMERS.

SCHEMATIC DIAGRAM
MODEL 7A

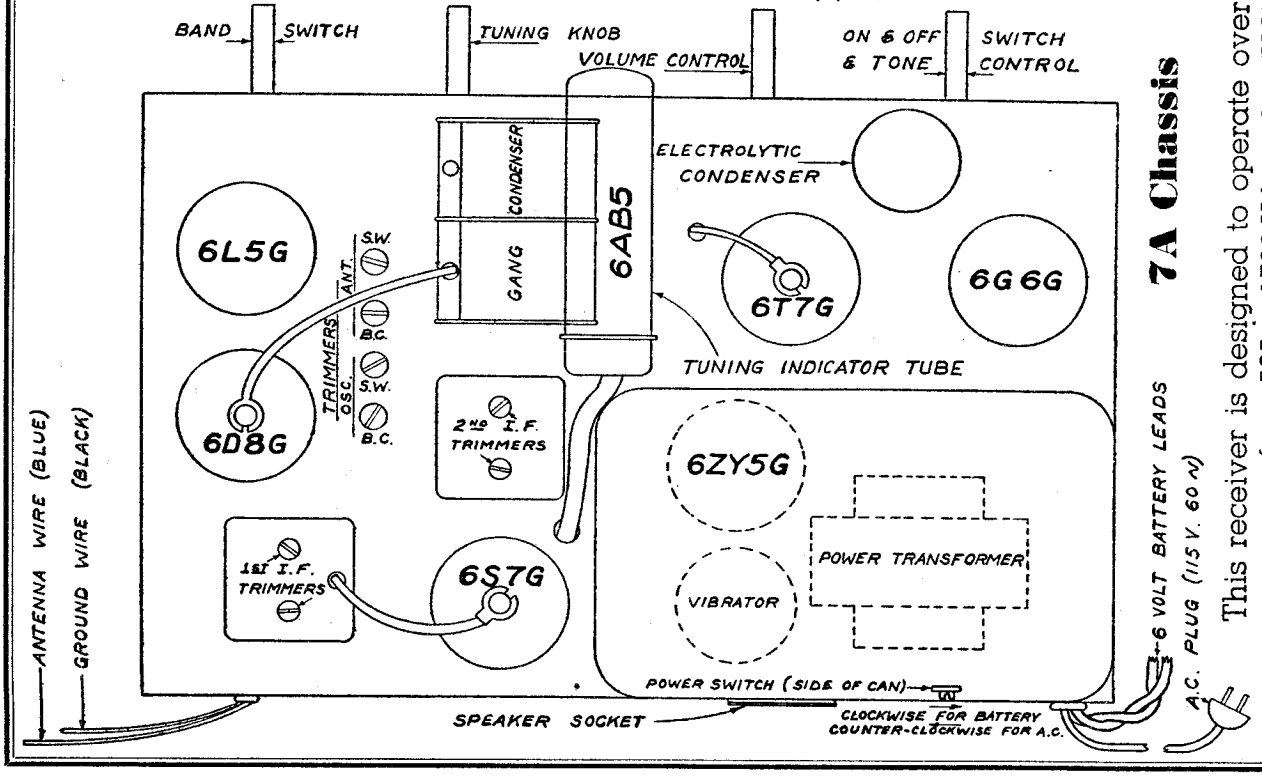

This receiver is designed to operate over two tuning ranges; from 535 to 1730 Kilocycles (KC) (173.4 to 561 meters), and from 5650 to 18,100 Kilocycles (KC) (16.5 to 53 Meters).

©John F. Rider, Publisher

MODEL 7G
Schematic, Socket
Trimmers, Alignment
Tuner Data

RADIO PRODUCTS CORP.

Seven Tube AC Automatic Tuning

SCHEMATIC DIAGRAM
MODEL 7G

This receiver is designed to operate over two tuning ranges: from 545 to 1720 kc and from 5800 to 18,100 kc

RESISTORS		
No.	OHMS	WATTS
R1	10,000	1/2
R2	10,000	1/2
R3	10,000	1/2
R4	350	1/2
R5	2 MEG	1/2
R6		
R7	15 MEG.	1/2
R8	500,000	VOL. CONT.
R9	500,000	TONE CON.
R10	1 MEG	1/2
R11	250,000	1/2
R12	500,000	1/2
R13	400 ± 5%	1
R14	5,000	1/2
R15	50,000	1/2

POWER TRANS	P-2573
ANT. COIL	P-2587
OSC. COIL	P-2586
SWITCH	P-2587

CAPACITORS		
No.	MFDS	TYPE
C1	.065	600 V.
C2	.0001	MICA
C3	.01	400 V.
C4	.05	200 V.
C5	.05	400 V.
C6	.00025	MICA
C7	.01 (STRAY)	400 V.
C8	.01	400 V.
C9	.00025	MICA
C10	.03	400 V.
C11	10.0 (ELECT)	350 V.
C12	10 (ELECT)	350 V.
C13	.005	600 V.
C14	.004 ± 5%	MICA
C15	.0015	MICA
C16	.0001	MICA
C17	.003 ± 5%	MICA
C18	.00067 ± 1%	MICA
C19	.00065 ± 1%	
C20	.00025 ± 1%	

PROCEDURE FOR SETTING UP AUTOMATIC PUSH BUTTONS

A glance at Fig. 1 will show that there are eight (8) push buttons, six (6) of which are for automatic use; the adjusting screws are located directly below these push buttons. Fig. 1 also shows the tuning range or frequencies covered by each button.

The remaining two (2) push buttons, located at the extreme left hand end of the push button plate are for short wave and manual tuning. Short wave tuning is accomplished by pressing "short wave" button and tuning with the selector knob. By pressing "manual tuning" button, the automatic disconnects and the selector knob becomes active for the broadcast band.

1. Choose a station having a frequency within the range of button No. 1 (540 to 980 kc).
2. Press "Manual Tuning" button and tune this station conventionally by using the selector knob.
3. Now press button No. 1 and turn adjusting screw in either direction until the previously selected station is heard. Adjust the screw until the dark area of the "electric eye" is smallest. This setting will give the best tonal response with maximum sensitivity.
4. Remove the call letters of the station from the call letter sheet furnished and insert in the window of the adjusting screw.
5. Repeat the above procedure for the remaining five (5) stations.

NOTE: It is advisable to retain the call letter sheet in case of station change later on.

POWER SUPPLY This receiver is designed to operate from a power supply main of 110-120 volts, 60 cycle alternating current (A.C.). **NEVER PLUG INTO A D.C. OUTLET.**

CONVENTIONAL ALIGNMENT SEE SPECIAL SECTION VOL. VIII.

©John F. Rider, Publisher

MODEL 55 Auto
Schematic, Socket
Trimmers, Tuner

RADIO PRODUCTS CORP.

For 5 Tube Under Dash Automatic Push Button Tuning Automobile Radio

CONDENSERS		
No	CAP-MFD	TYPE
1	.1	200V.
2	.0001	MICA
3	.05	400V.
4	.00025	MICA
5	.01	400V.
6	.00025	MICA
7	.01	400V.
8	.1	200V.
9	.01	400V.
10	.25	120V.
11	.006	1500V.
12	.5	120V.
13	.5	120V.
14	8. } ELECT	400
15	8. }	W.V.

RESISTORS		
No	OHMS	WATTS
1	50,000	¼
2	15,000	1
3	1,000,000	¼
4	(W.W.) 60	½
5	500,000	V.C.
6	2,000,000	¼
7	(W.W.) 40	½
8	200,000	¼
9	500,000	¼
10	100,000	¼
11	100	½
12	100	½

ALIGNMENT: (SEE MODEL 4A)
IF AT 456 KC.
BROADCAST: AT 1550 KC & 1400 KC.

FIGURE 6

FIGURE 5

3. SETTING UP STATIONS ON PUSH BUTTONS. Select five (5) favorite powerful local stations. With the dial pointer at the extreme left hand end, loosen knurled locking screw, (see Figures 5 and 6) two (2) full turns. *Now carefully tune in any one of five chosen stations using station selector knob; press in the first button all the way then release.* (There is no sequence of buttons—that is, any station may be set up on any particular button desired.

Note: Should there be any noticable pointer movement while pressing any push button, it is an indication that the knurled locking screw has not been loosened quite sufficiently. Now tune in the second station and press in the second button all the way then release. Repeat the same procedure for the remaining three buttons. After the stations have been set up, tighten the knurled locking screw securely. This screw will lock in place all the stations that have been set up. If you desire to change any station already set up, loosen knurled locking screw two (2) full turns and set up as explained above. Be sure to tighten knurled nut securely when resetting has been completed. Tear the correct station call letter tabs from the set of sheets supplied and insert them into the rectangular openings provided on the front of the push button knob.

©John F. Rider, Publisher

Schematics, Voltage Alignment

REMLER COMPANY, LTD.

MODEL 28 "Scottie"
Above Ser. 77039
MODEL 46 "Scottie"
Ser. 98515 to 107767

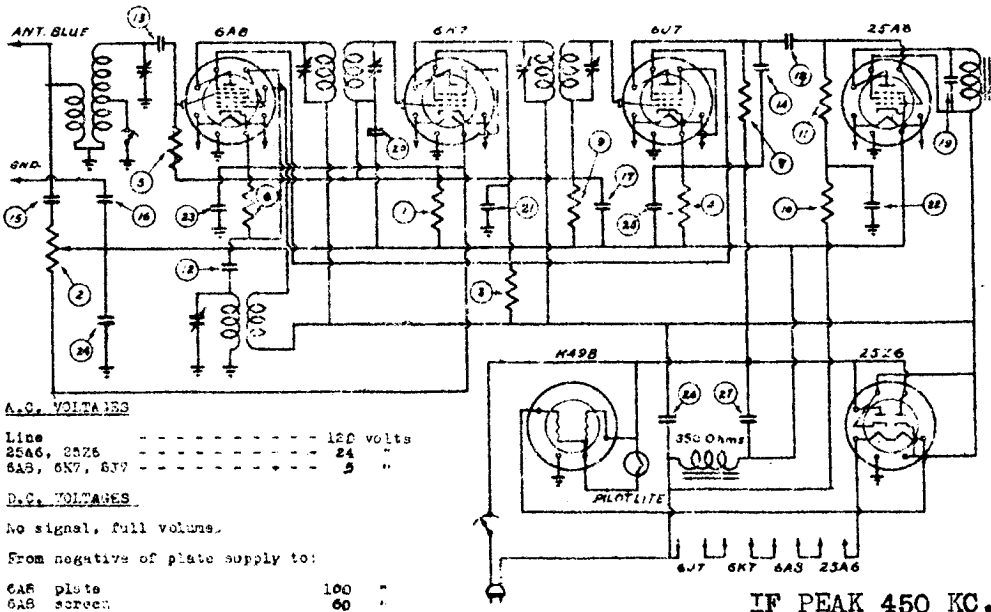

RESISTORS	
1	5000 Ohms
2	11000
3	25000
4	25000
5	100,000
6	150000
7	250 000
9	500 000
10	500 000
11	1 Meg.

CONDENSERS	
12	.00037
13	.0005
14	.001
15	.001
16	.01
17	.01
18	.01
19	.01
20	.01
21	.05
22	.1
23	.25
24	.25
25	.25
26	10
27	10

Wherever the power source is 220 volts, a resistor voltage reducer may be secured and inserted in the line cord.

A.C. VOLTAGES

Line	120 volts
25A6, 25Z6	24 "
6A8, 6K7, 6J7	5 "

D.C. VOLTAGES

No signal, full volume.

From negative of plate supply to:

6A8 plate	100 "
6A8 screen	60 "
6A8 osc. plate	100 "
6A8 cathode	3 "
6K7 plate	100 "
6K7 screen	100 "
6K7 cathode	3 "
6J7 plate	40 "
6J7 screen	60 "
6J7 cathode	3 "
25A6 plate	95 "
25A6 screen	160 "
25A6 grid bias supply	15 "

Voltages read with 1000 ohm per volt meter

IF PEAK 450 KC.

MODEL 28

Beginning Serial # 77039

110-125 VOLTS AC-DC
SEE SERVICE DATA BELOW.

TUBES

Type 6A8 - Converter
" 6K7 - I.F. Amplifier
" 6J7 - Detector
" 25A6 Power amplifier pentode
" 25Z6 Rectifier
" K49B Ballast
" 46 - Dial lamp.

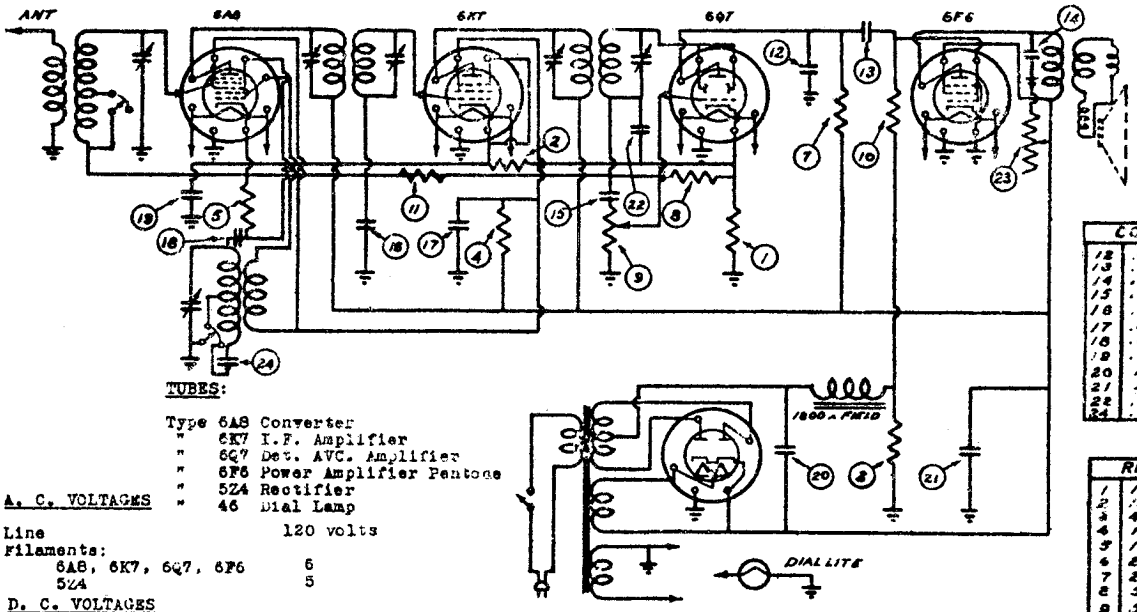

CONDENSERS		
12	.001	Mfd.
13	.01	
14	.05	
15	.01	
16	.05	
17	.05	
18	.00007	
19	.1	
20	4	
21	4	
22	.0005	
24	.0004	

RESISTORS	
1	100 Ohms
2	150
3	400
4	15000
5	100 000
6	250 000
7	250 000
8	500 000
9	500 000
10	500 000
11	1 Meg
23	25000

TUBES:

Type 6A8 Converter
" 6K7 I.F. Amplifier
" 6Q7 Det. AVC. Amplifier
" 6F6 Power Amplifier Pentode
" 5Z4 Rectifier
" 46 Dial Lamp

A. C. VOLTAGES

Line	120 volts
Filaments:	
6A8, 6K7, 6Q7, 6F6	6
5Z4	5

D. C. VOLTAGES

No signal,

From ground to:

6A8 Plate	240 volts
6A8 Screen	125 "
6A8 Osc. Plate	125 "
6A8 Cathode	4.2
6K7 Plate	240
6K7 Screen	125
6K7 Cathode	4.2
6Q7 Plate	100
6Q7 Cathode	1.8
6F6 Plate	230
6F6 Screen	240
6F6 Grid Bias	18

Voltages read with 1000-Ohm per volt meter.

IF PEAK 450 KC.

MODEL 46 BEGINNING SERIAL No. 98515

The receiver is designed for operation from an alternating current (A.C.) power supply of 110-125 volts, 50 or 60 cycles.

SERVICE DATA MODELS 28 & 46

The antenna R.F. coil is located over the variable condenser and is trimmed by the trimmer on the rear section of the variable condenser. The oscillator coil is mounted under the chassis and is trimmed by the front trimmer section. The I.F. transformers and trimmers are mounted under the chassis. The I.F. frequency is 450 K.C.

©John F. Rider, Publisher

MODEL 46 "Scottie"
Above Ser.107767
MODEL 47 "Worldwide Scottie"
Above Ser.92942

REMLER COMPANY, LTD.

Schematics, Voltage, Alignment

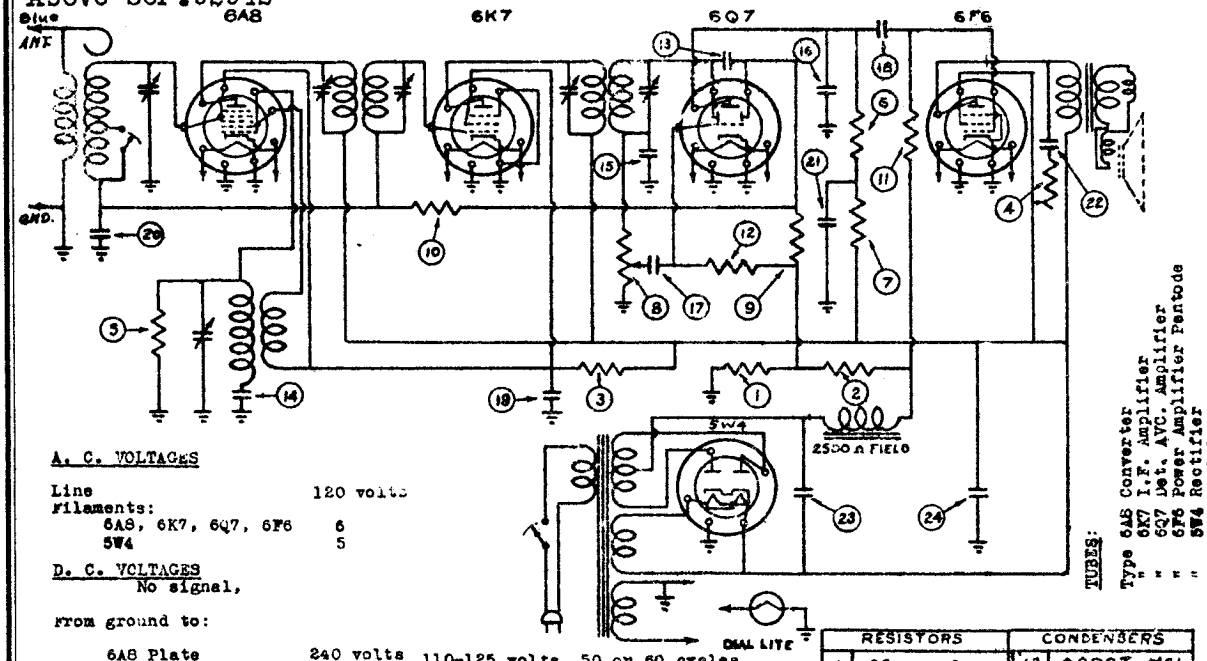

TUBES:
Type 6A8 Converter
" 6K7 I.F. Amplifier
" 6Q7 Det. AVC. Amplifier
" 6F6 Power Amplifier Pentode
" 5W4 Rectifier
" 46 Dial Lamp

A. C. VOLTAGES

Line	120 volts
Filaments:	
6A8, 6K7, 6Q7, 6F6	6
5W4	5

D. C. VOLTAGES
No signal,

From ground to:

6A8 Plate	240 volts
6A8 Screen	125 "
6A8 Osc. Plate	125 "
6A8 Bias supply	2
6K7 Plate	240
6K7 Screen	125
6K7 Bias supply	2
6Q7 Plate	70
6Q7 Bias Supply	2
6F6 Plate	230
6F6 Screen	240
6F6 Grid Bias	18

Voltages read with 1000-Ohm per volt meter.

110-125 volts, 50 or 60 cycles.

IF PEAK 450 KC.

MODEL 46
Beginning Serial No. 107767

	RESISTORS		CONDENSERS	
1	25	Ohms	13	.00007 Mfd
2	400		14	.0004
3	15000		15	.0005
4	25000		16	.001
5	100000		17	.01
6	250000		18	.01
7	250000		19	.05
8	500000		20	.05
9	3 Meg.		21	.05
10	1 Meg.		22	.05
11	1 Meg.		23	16
12	2 Meg.		24	4

SERVICE DATA:

The antenna K.F. coil is located over the variable condenser and is trimmed by the trimmer on the rear section of the variable condenser. The oscillator coil is mounted under the chassis and is trimmed by the front trimmer section. The I.F. transformers are adjusted to 450 K.C. The I.F. frequency is 450 K.C.

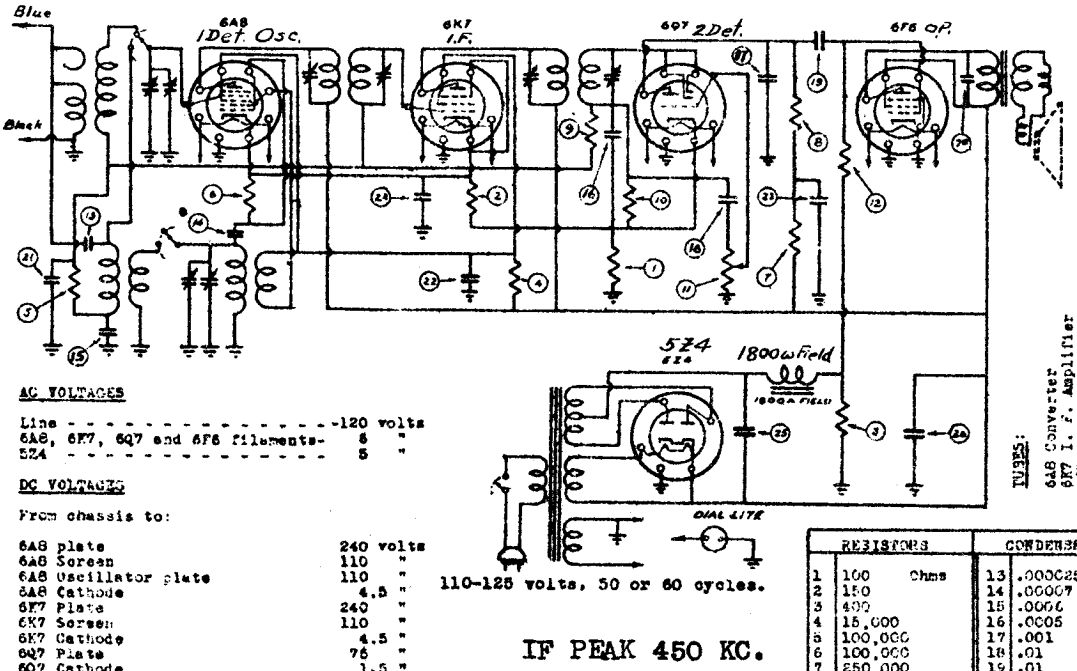

TUBES:
6A8 Converter
6K7 I.F. Amplifier
6Q7 Diode detector-audio amplifier
6F6 Power amplifier pentode
5Z4 Rectifier
T46 Dial lamp.

AC VOLTAGES

Line	120 volts
6A8, 6K7, 6Q7 and 6F6 filaments	6 "
5Z4	5 "

DC VOLTAGES

From chassis to:

6A8 plate	240 volts
6A8 Screen	110 "
6A8 Oscillator plate	110 "
6A8 Cathode	4.5 "
6K7 Plate	240 "
6K7 Screen	110 "
6K7 Cathode	4.5 "
6Q7 Plate	75 "
6Q7 Cathode	1.5 "
6F6 Plate	225 "
6F6 Screen	240 "
6F6 Grid bias	18.5 "

Voltage across field - 120 volts

Voltages read with 1000 ohm per volt meter.

110-125 volts, 50 or 60 cycles.

IF PEAK 450 KC.

MODEL 47
Beginning Serial No. 92942

	RESISTORS		CONDENSERS	
1	100	Ohms	13	.000025 Mfd.
2	150		14	.00007
3	400		15	.0006
4	15,000		16	.0005
5	100,000		17	.001
6	100,000		18	.01
7	250,000		19	.01
8	250,000		20	.01
9	500,000		21	.05
10	500,000		22	.05
11	500,000		23	.05
12	1 Meg.		24	.25
			25	4
			26	4

SERVICE DATA

The antenna-mixer coil is located adjacent to the variable condenser and is trimmed by the trimmer on the rear section of the variable condenser. The oscillator coil is mounted under the chassis and is trimmed by the front trimmer section. The I.F. transformers and trimmers are mounted under the chassis and are adjusted to 450 KC. The antenna filter is located adjacent to the antenna-mixer coil and is tuned to 450 KC to minimize interference from code stations.

©John F. Rider, Publisher

REMLER COMPANY, LTD.

MODEL 49
Schematic

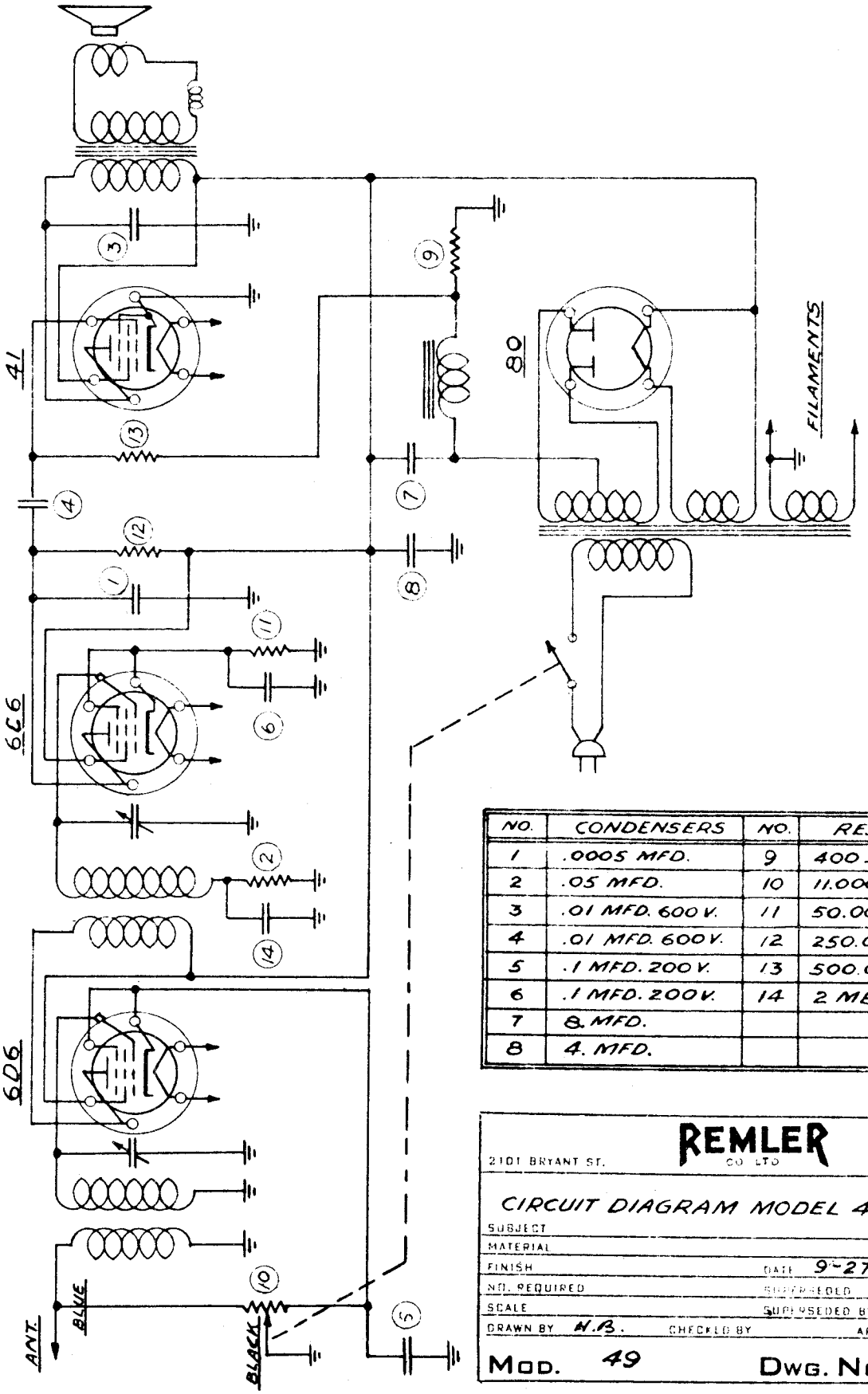

NO.	CONDENSERS	NO.	RESISTORS
1	.0005 MFD.	9	400 Ω 1 WATT
2	.05 MFD.	10	11.000 Ω STOP 200
3	.01 MFD. 600 V.	11	50.000 Ω
4	.01 MFD. 600 V.	12	250.000 Ω
5	.1 MFD. 200 V.	13	500.000 Ω
6	.1 MFD. 200 V.	14	2 MEG
7	8. MFD.		
8	4. MFD.		

REMLER
2101 BRYANT ST. CO. LTD. SAN FRANCISCO, CALIF.

CIRCUIT DIAGRAM MODEL 49

SUBJECT
MATERIAL
FINISH DATE 9-27-38
NO. REQUIRED SUPERSEDED
SCALE SUPERSEDED BY
DRAWN BY N.B. CHECKED BY APPROVED BY

MOD. 49 DWG. NO.

©John F. Rider, Publisher

MODEL 61
Beg.Ser.113701
MODEL 65
Beg.Ser.109217

REMLER COMPANY, LTD.

Schematics, Voltage Alignment, Tuner

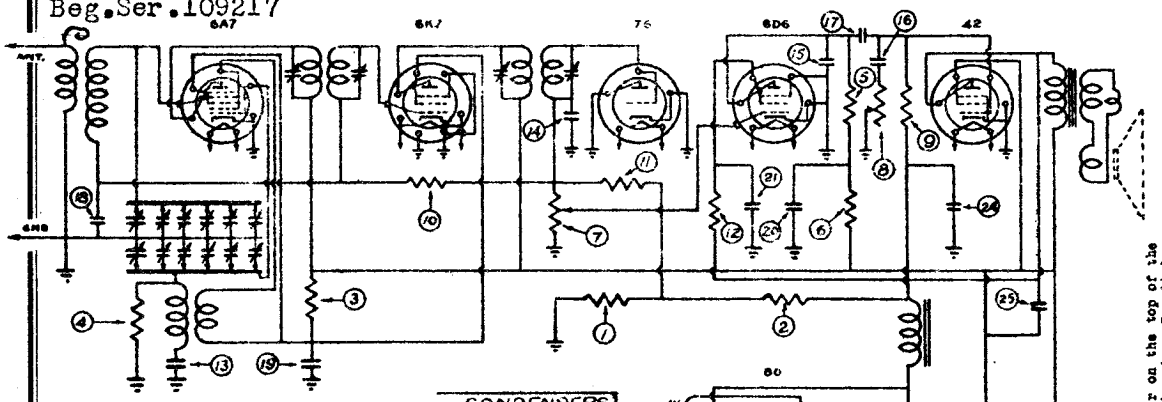

RESISTORS	
1	50
2	400
3	15000
4	100000
5	250000
6	250000
7	500000
8	500000
9	500000
10	1 Meg
11	1 Meg
12	2 Meg

CONDENSERS	
13	.0004
14	.0005
15	.001
16	.006
17	.01 - 25 .01
18	.05
19	.05
20	.05
21	.1
22	4
23	8
24	10 25 V.

VOLTAGE READINGS FOR SERVICE WORK

A.C. Voltages:

Line	120 volts
Heater Rectifier	5 "
Other heaters	6 "

D.C. Voltages: No signal. From ground to:-

80 Rectifier filament	325 "
42 Plate	245 "
42 Screen	255 "
42 Bias supply	21 "
6D6 Plate	20 "
6D6 Screen	10 "
6D6 Bias supply	2.5 "
6K7 Plate	255 "
6K7 Screen	120 "
6K7 Bias supply	3.5 "
6A7 Pentode Plate	255 "
6A7 Oscillator Plate	120 "
6A7 Screen	120 "
6A7 Bias supply	2.5 "

6A7 - Pentagrid Converter
6K7 - I.F. Amplifier
76 - Diode detector
6D6 - Audio amplifier
42 - Power amplifier
80 - Rectifier
- Type 46 dial lamps.

IF PEAK 450 KC.

MODEL 61
Beginning Ser. No. 113701

AUTOMATIC PUSH-BUTTON TUNING

The receiver is adjusted for selecting five stations by means of the push-buttons. Call letters of these stations are indicated on the buttons. To receive these stations, turn on the set as described in the above paragraph and depress the button corresponding to the desired station. Adjust volume to intensity required.

The knob on the right is the tone control. When turned to the left, the higher audio frequencies are suppressed.

Directions for changing the push-button station set-up are attached to the bottom of the cabinet. A sheet of push-button call letters is furnished with the set. The call letter discs may be removed from the buttons with a pen knife, and other discs pressed in.

SERVICE DATA

The mixer coil is located next to the variable condenser on the top of the chassis. The oscillator coil is on the inside of the chassis. Parallel trimmer condensers are mounted on the variable condenser. The oscillator trimmer is nearest the front of the set.

Trimmers for the I.F. circuit are adjustable through holes in the I.F. shield. The I.F. frequency is 450 KC.

Trimmers for the push-button circuits are accessible through a slot in the bottom of the cabinet. These trimmers have the following approximate tuning ranges.

#1 group	530-850 KC	#4 group	880-1075 KC
#2 "	530-950 KC	#5 "	975-1500 KC
#3 "	620-1075 KC		

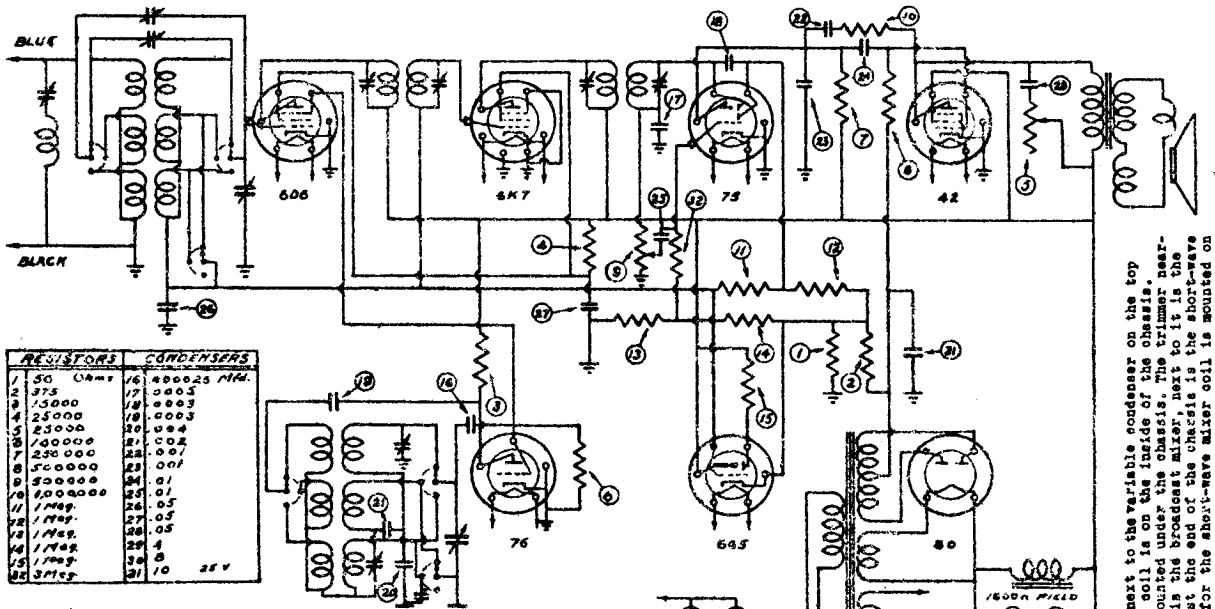

RESISTORS		CONDENSERS	
1	50 Ohms	16	.000025 Mfd.
2	375	17	.0005
3	15000	18	.0003
4	25000	19	.0003
5	65000	20	.004
6	100000	21	.002
7	250 000	22	.001
8	500000	23	.001
9	500000	24	.01
10	1,000000	25	.01
11	1 Meg.	26	.05
12	1 Meg.	27	.05
13	1 Meg.	28	.05
14	1 Meg.	29	4
15	1 Meg.	30	8
16	3 Meg.	31	10 25 V

D.C. Voltages: From ground to:- VOLTAGE READINGS FOR SERVICE WORK FOLLOW:

80 Rectifier filament	320	Volts
6F6 Plate	230	"
6F6 Screen	245	"
6F6 Bias supply	19	"
75 Plate	115	"
6K7 Plate	245	"
6K7 Screen	95	"
6K7 Bias	2.5	"
6D6 Plate	245	"
6D6 Screen	95	"
6D6 Bias	2.5	"
76 Plate	150	"
6G5 Plate	245	"
6G5 Bias	2.5	"

Readings taken with 1000 ohm per volt meter.

A.C. Voltages:

Line	120	Volts
Heater 80 Rectifier	4.8	"
Other heaters	5.8	"

6D6 - Converter
76 - Oscillator
6K7 - I.F. Amplifier
75 - Diode-Triode detector
42 - Power Amplifier
6G5 - Tuning Indicator
80 - Rectifier
Type 46 6-8 volt dial lamps.

IF PEAK 450 KC.

MODEL 65

Beginning Serial No. 109217

SERVICE DATA

The Mixer coil is located next to the variable condenser on the top of the chassis. The oscillator coil is on the inside of the chassis. A trimmer condenser strip is mounted under the chassis. The trimmer nearest the center of the chassis is the broadcast mixer, next to it is the broadcast oscillator and nearest the end of the chassis is the short-wave oscillator trimmer. A trimmer for the short-wave mixer coil is mounted on on the short-wave switch.

An antenna filter is mounted on the top of the chassis. The trimmer should be adjusted for minimum signal for 450 K.C. input to the antenna.

Trimmers for the I.F. transformers are adjustable thru holes in the I.F. transformer shield cans. The I.F. frequency is 450 K.C.

©John F. Rider, Publisher

REMLER COMPANY, LTD.

MODEL 72
Beg.Ser.104459
Schematic, Voltage
Alignment, Data

SERVICE DATA

The following tubes are used in this receiver:

1 6K7 R.F. Amplifier
1 6L7 Mixer
1 6J5 Oscillator
1 6K7 I.F. Amplifier
1 6H6 Diode Detector
1 6N7 A.F. Amplifier
2 6F6 Power Amplifiers
1 6G5 Tuning Indicator
1 5Z4 Full-wave Rectifier

The R.F. Mixer and Oscillator coils are located in the square shields on the right end of the chassis. Trimmers for these circuits are mounted along the end of the chassis in the following order from front to rear:- R.F. short-wave, Mixer short-wave, Oscillator broadcast, Oscillator medium wave, Oscillator short-wave. The R.F. broadcast and the Mixer broadcast trimmers are mounted on the band switch assembly.

Oscillator pads are located at the rear of the chassis. The broadcast pad is nearest the end of the chassis and the medium wave next.

Trimmers for the I.F. transformers are adjustable thru holes in the I.F. transformer shield cans. The I.F. frequency is 450 K.C.

A.C. Voltages

Line	120	Volts
Heater 5Z4 Rectifier	5.00	"
Other Heaters	6.00	"

D.C. Voltages
From ground to:-

5Z4 Rectifier	340	Volts
6F6 Plate	225	"
6F6 Screen	240	"
6F6 Bias supply	17.5	"
6N7 Audio plate	130	"
6N7 Bias	-5	"
6K7 I.F. plate	240	"
6K7 I.F. screen	160	"
6K7 I.F grid bias	-4.5	"
6L7 Mixer plate	240	"
6L7 Mixer screen	160	"
6L7 Mixer grid bias	-4.5	"
6K7 R.F. plate	240	"
6K7 R.F. screen	160	"
6K7 R.F. grid bias	-4.5	"
6J5 Oscillator plate	150	"
6G5 Tuning indicator plate	240	"

Readings taken with 1000 ohm per volt meter.

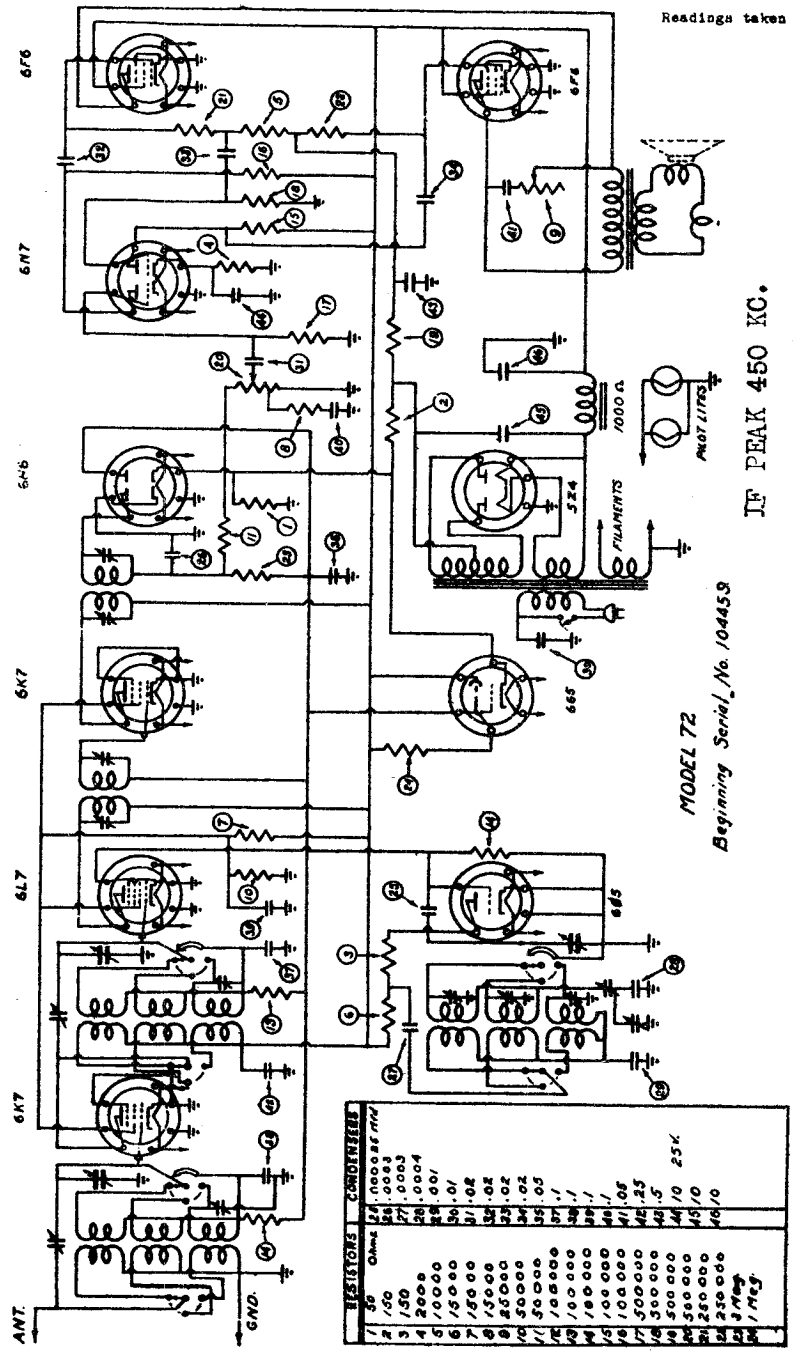

MODEL 72

This is a ten tube all-wave receiver with metal tubes. It is designed to operate from a 110 to 125 volt, 50 or 60 cycle power supply.

TUNING RANGES

The lower scale of figures on the dial is the calibration for the broadcast range which extends from 540 to 1715 kilocycles. The medium wave range is indicated by the middle scale of figures which are colored green. This range covers from 1.7 megacycles to 5.7 megacycles and includes the amateur, police and aircraft bands. The upper red scale is the short-wave range and extends from 5.7 to 18 megacycles. The various foreign and American short-wave broadcast bands are included on this range and are denoted by the inscriptions on the scale.

OPERATION

With the line cord connected, turn the volume control to the right, the dial should light up brightly. Allow about half a minute for the tubes to warm up and turn the selector knob until the desired program is heard. If too loud reduce the volume by turning the volume control to the left. For best quality the selector should be adjusted for minimum shadow in the tuning indicator which is located in the center of the dial.

INSTALLATION

When a standard antenna is used, the length should be from 25 to 100 feet. Connect to the blue wire extending from the back of the receiver. The antenna lead-in should be kept clear of all metal objects, such as pipes and wires, an should be run in as straight a line as possible. An indoor antenna may be used for local reception or when the receiver is used in an isolated wooden building. Superior performance on short wave will result from the use of a well constructed doublet antenna, or short wave antenna system. Such antennas are available on the market in kit form with complete instructions for their installation.

A good ground is essential for clearest reception. Connect the black wire to a steam or water pipe. The pipe should be scraped clean before attaching the wire.

©John F. Rider, Publisher

MODELS 89,89C
Beg.Ser.92582
Schematic,Voltage
Alignment,Phono.

REMLER COMPANY, LTD.

The following tubes are used in this receiver;

6K7-R.F. Amplifier
6L7-Mixer
6C5-Oscillator
6K7-I.F. Amplifier
6H6-Diode Detector
6F5-A.F. Amplifier
6F5-A.F. Amplifier
5V6G-Beam Power Amplifier
6V6G-Beam Power Amplifier
6E5-Tuning Indicator
5X4G-Rectifier

The R.F.,Mixer and oscillator coils are located in the large square shields on the right end of the chassis.
Trimmers for these circuits are mounted along the end of the chassis,beneath the coils in the following order; R.F. short wave, Mixer short wave, Oscillator broadcast, Oscillator medium wave, Oscillator short wave. From front to rear. The R.F. broadcast and Mixer broadcast trimmers are mounted on the range switch assembly. Oscillator pads are located at the back of the variable condenser. The pad nearest the end of the chassis is for the broadcast band and the medium wave is next.
Trimmers for the I.F. transformers are adjustable thru holes in the I.F. transformer shield cans. The I.F. frequency is 450 K.C.

Voltage readings for service work:

A.C. Voltages:	
Line	120 Volts
Heater 5X4G	4.8 "
Heaters other tubes	6 "
D.C. Voltages: (no signal) from ground to:	
5X4G Rectifier Filament	260 Volts
6V6G Plates	240 "
6V6G Screens	250 "
6V6G Bias	16.5 "
6F5 Plates	89 "
6F5 Bias	1.5 "
6K7 I.F. Plate	250 "
6K7 I.F. Screen	100 "
6K7 I.F. Bias	3 "
6L7 Plate	260 "
6L7 Screen	100 "
6L7 Bias	3 "
6C5 Plate	160 "
6K7 R.F. Plate	260 "
6K7 R.F. Screen	100 "
6K7 R.F. Bias	3 "
6E5 Target Voltage	260 "
Voltage across speaker field	75 "

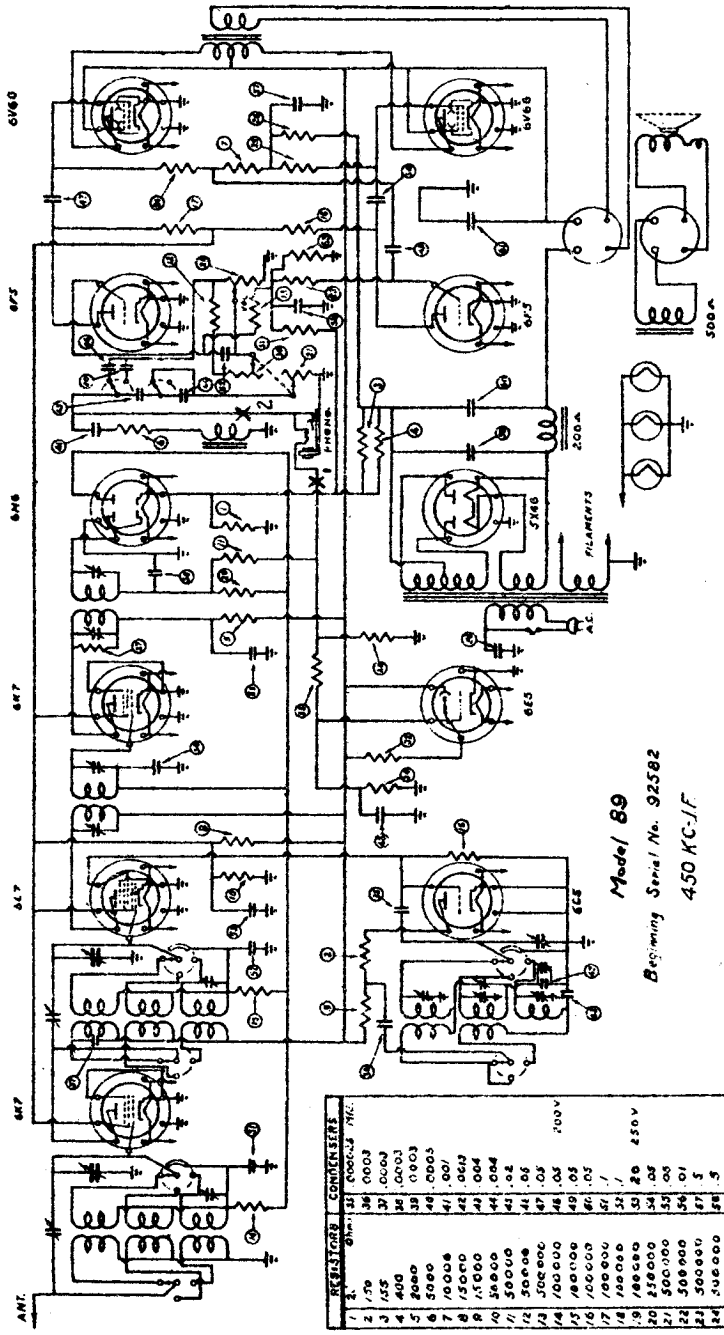

OPERATION - PHONOGRAPH

Switch the receiver to the PHONO position on the change-over switch. Turn the volume control to the right and allow about one half minute for the tubes to warm up.

Grasp, Seven 12-inch or Eight 10-inch Records, line them up with center holes and slip them onto center pin of the turntable.

See that needle is securely fastened by means of the small thumb screw on the front of the pickup. We recommend standard length needles. On an automatic you should use a needle which will play many records without replacing. Your dealer can give you detailed information on this.

All that is necessary to start the phonograph after placing the records on the turn-table and securing the needle in pick-up, is to turn the motor switch, at the right of the turntable, to the ON position.

To play 10-inch records push the thumb stop,on right of tone arm, to the back as far as it will go, and place the lever, on the left of the turntable, in the 10-inch position. Place needle in starting position on top record.

To play 12-inch records pull the thumb stop, on the right of tone arm, as far out as it will go, and place the lever, on the left of turntable in the 12-inch position. Place needle in starting position on top record.

The last record on the turntable automatically repeats.

To reject a record, pull the lever at the base of the tone arm.

Adjust volume and tone by means of the controls on the front of the cabinet.

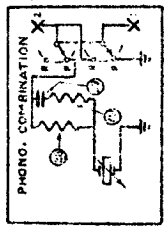

Model 89C
Beginning Serial No. 92582
450 KC-I.F.

©John F. Rider, Publisher

SEARS-ROEBUCK & CO.

MODEL A 1
Schematic, Voltage
Socket, Trimmers
Alignment

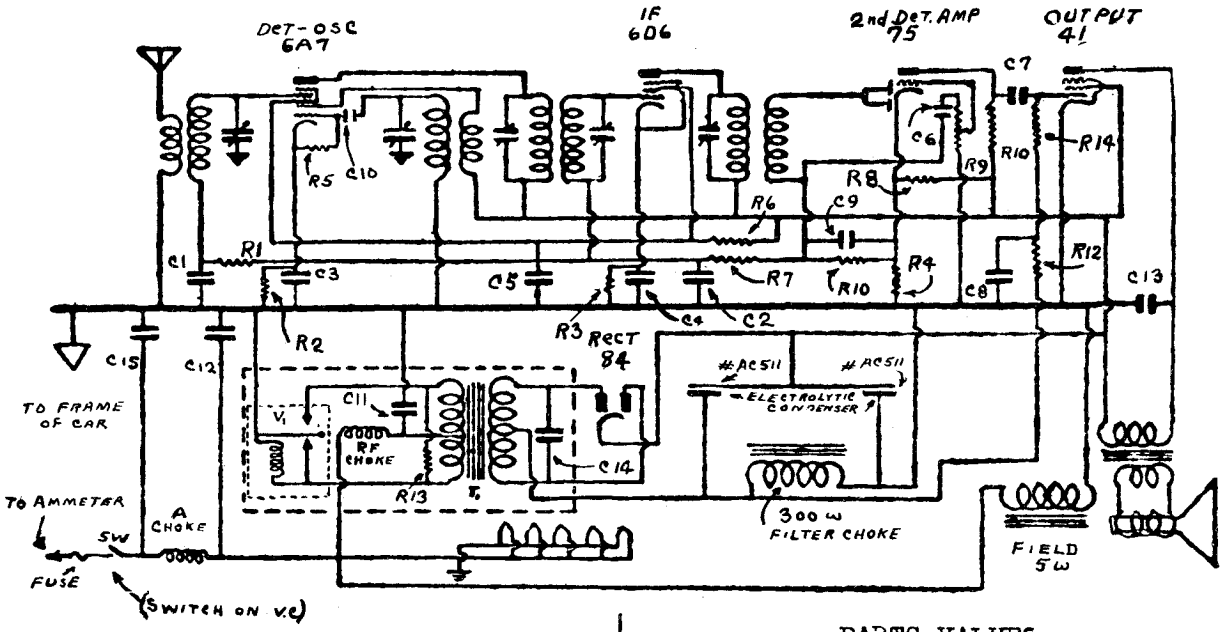

TUBE SOCKET DATA (Voltages to Ground)

Tube	Fil.	Plt.	Scr.	Cath.
6A7 Det. Osc.	6.1	220	95	3
6D6 I.F.	6.1	220	95	3.7
75 2nd Det. Amp.	6.1	120		1.3
41 Output	6.1	200	220	
84 Rectifier	6.1			220

Note: 6A7 Osc. Plate---200 Volts
41 Bias--14 Volts (Drop across B choke)

PARTS VALUES

C15	.5 MFD.	R7	1,000,000
C3,C4,C5,C8	.1 MFD.	R1,R14	500,000
C1,C2	.05 MFD.	R10,R11,R12	250,000
C6,C7	.02 MFD.	R8	100,000
C13	.005MFD.	R5	50,000
C14	.02 MFD.	R6	30,000
C10	.0001 Mica	R3,R4	600
C9	.0005 Mica	R2	400
C11,C12	.002 Mica	R13	150

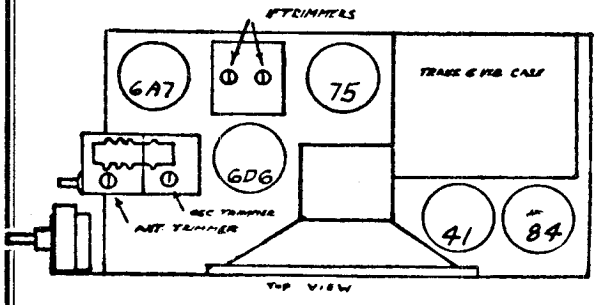

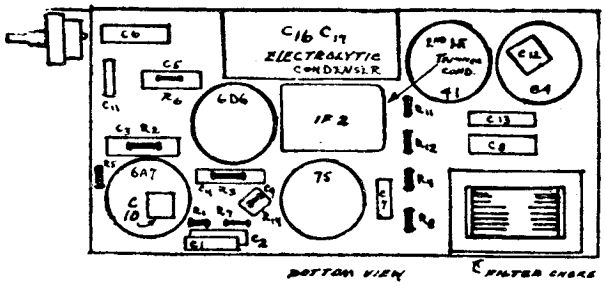

ALIGNMENT PROCEDURE

I.F.Alignment. Connect a signal generator set at 480kc to the 6A7 input and connect an output meter to the speaker output. Using a weak signal tune the two I.F. condensers on the composite coil and the single I.F. condenser on the output I.F. coil for maximum response.

Connect the signal generator set at 1400kc to the antenna lead using a dummy antenna of 150 mmf. Tune the set by means of the dial to 1400kc position. Adjust oscillator trimmer for this frequency. Then trim antenna stage for maximum response. Repeating the alignment may result in improved sensitivity.

©John F. Rider, Publisher

MODELS 52,95
Socket, Trimmers
Chassis View

SEARS-ROEBUCK & CO.

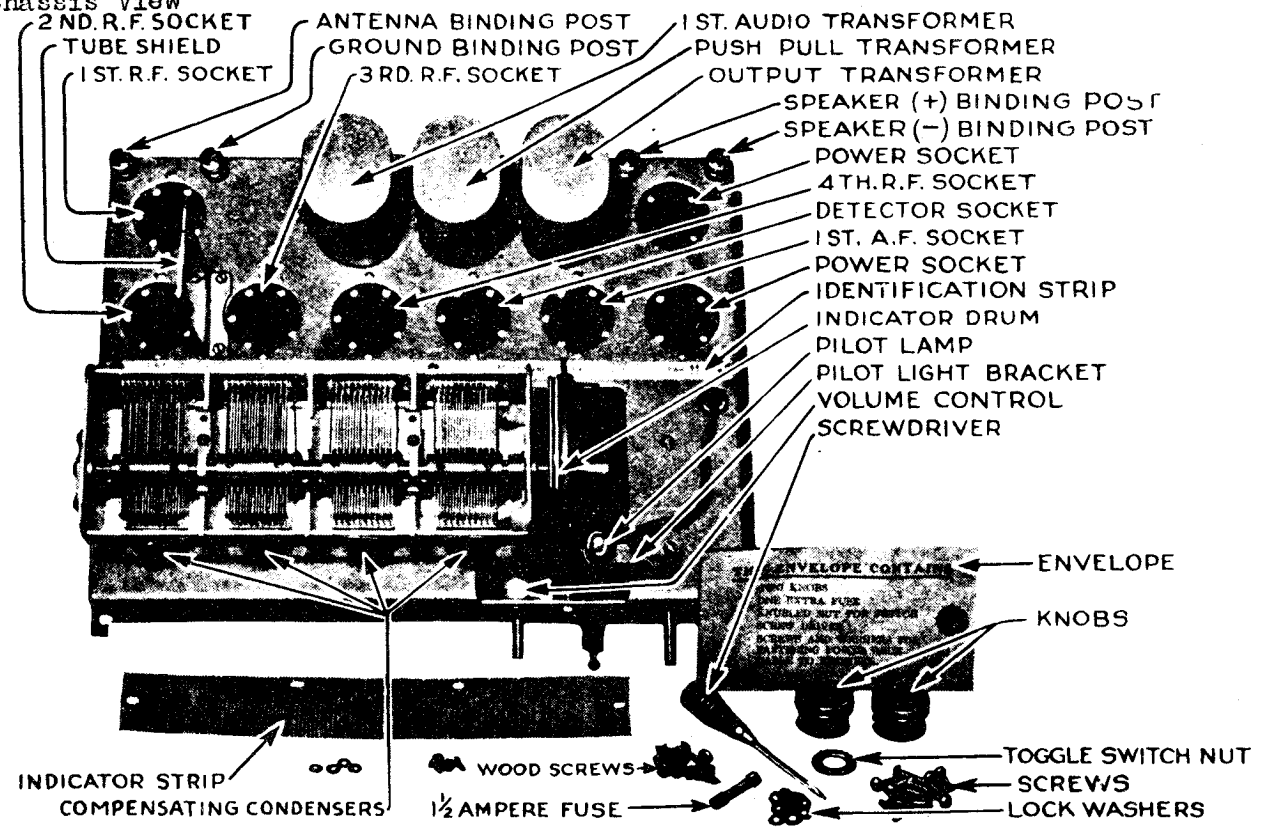

—Top View of Chassis—

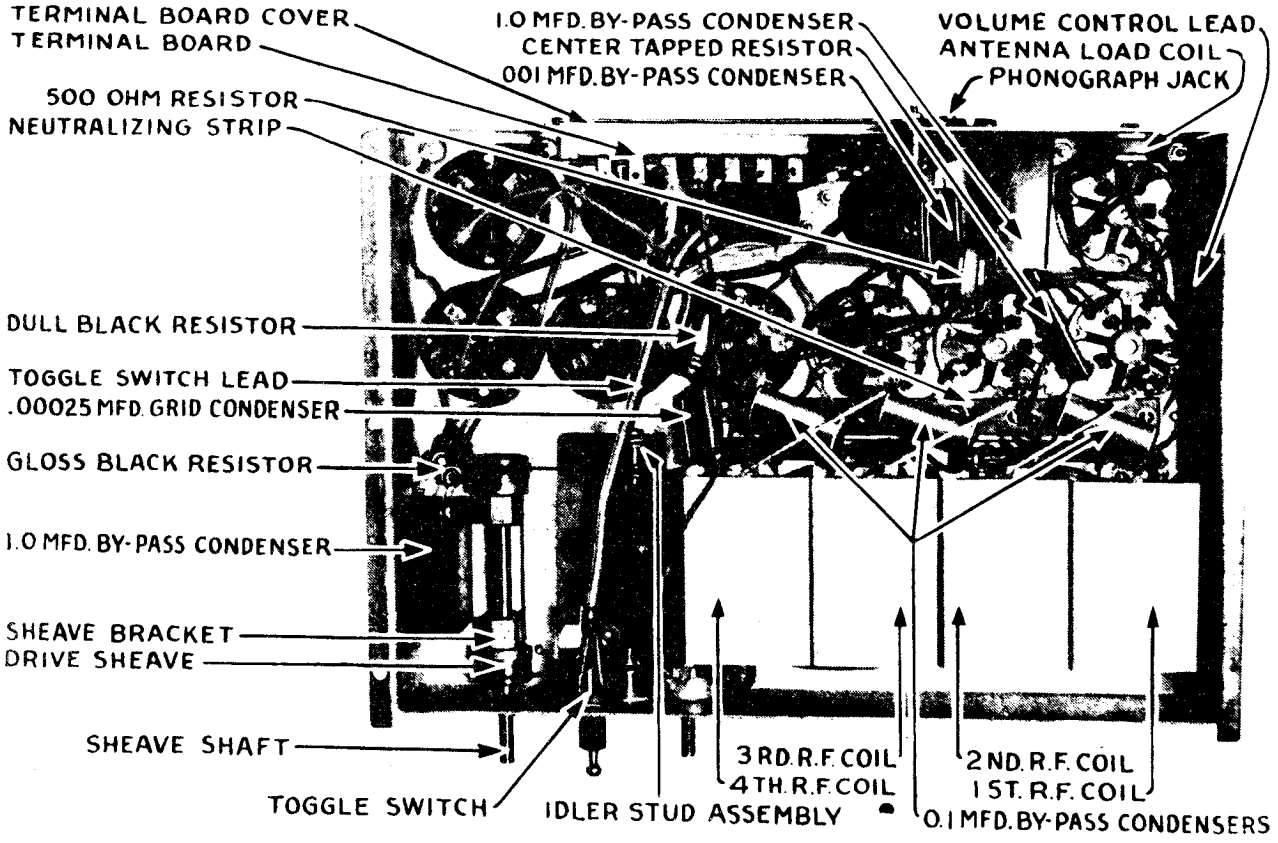

Bottom View of Chassis

©John F. Rider, Publisher

SEARS-ROEBUCK & CO.

MODEL 550
Schematic, Voltage
Alignment

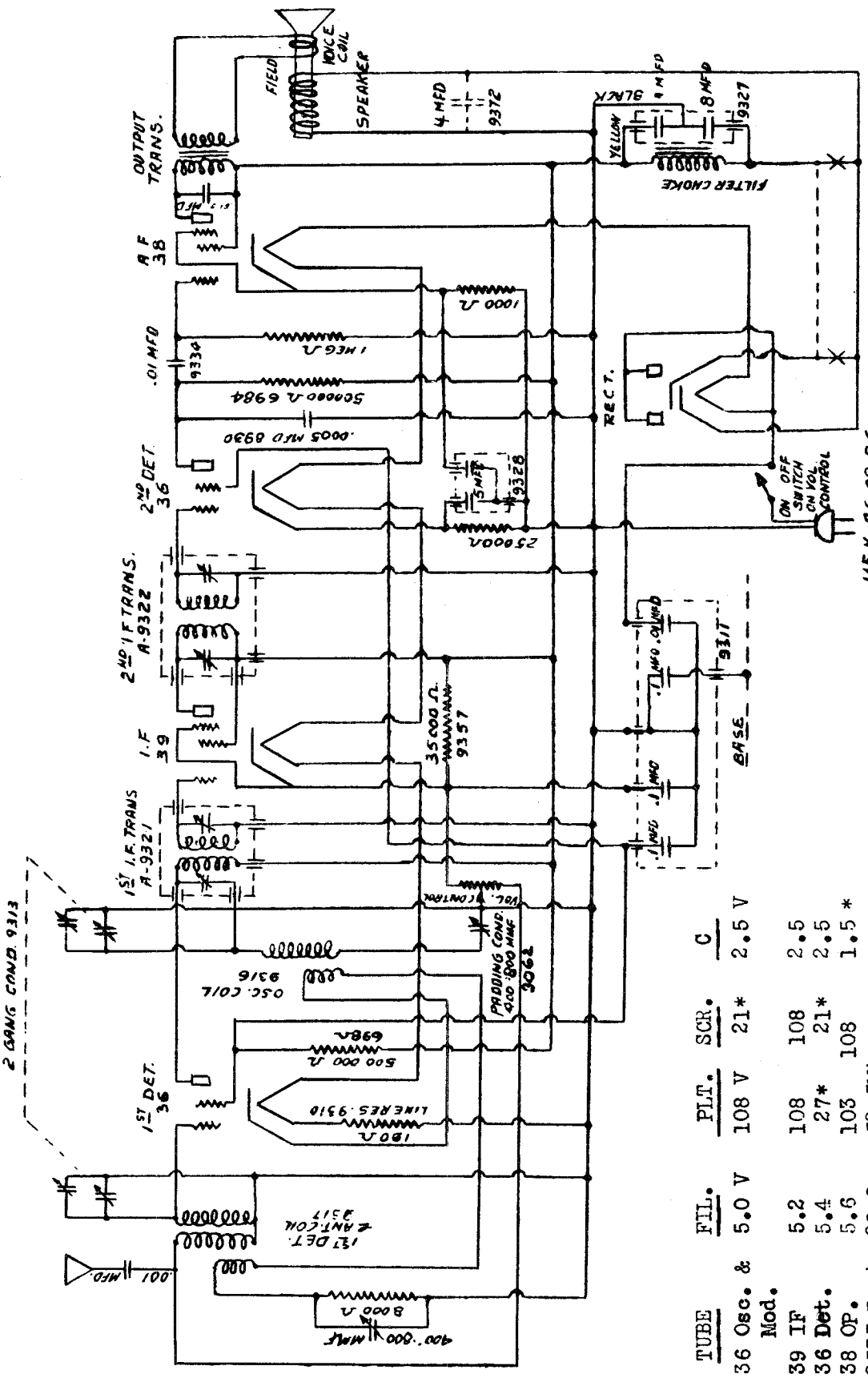

TUBE	FIL.	PLT.	SCR.	C
36 Osc. & Mod.	5.0 V	108 V	21*	2.5 V
39 IF	5.2	108	108	2.5
36 Det.	5.4	27*	21*	2.5
38 OP.	5.6	103	108	1.5 *
25Z5 Rect.	29.0	52.5MA		

* Readings are comparative voltages only. Voltage readings taken at these points in series with very high resistances.

IF ALIGNMENT: - Conn. test osc. op. to control grid of Osc.Mod (36)- Leave cap off. Set osc. for 265 KC, align IF for max. response.

RF ALIGNMENT: - Set dial and test osc. at 1720 KC, adjust Osc. and Ant. trimmers for max. response. Set dial and test osc. to 600 Kc, Adjust padder at 600 Kc. Repeat adjustments.

©John F. Rider, Publisher

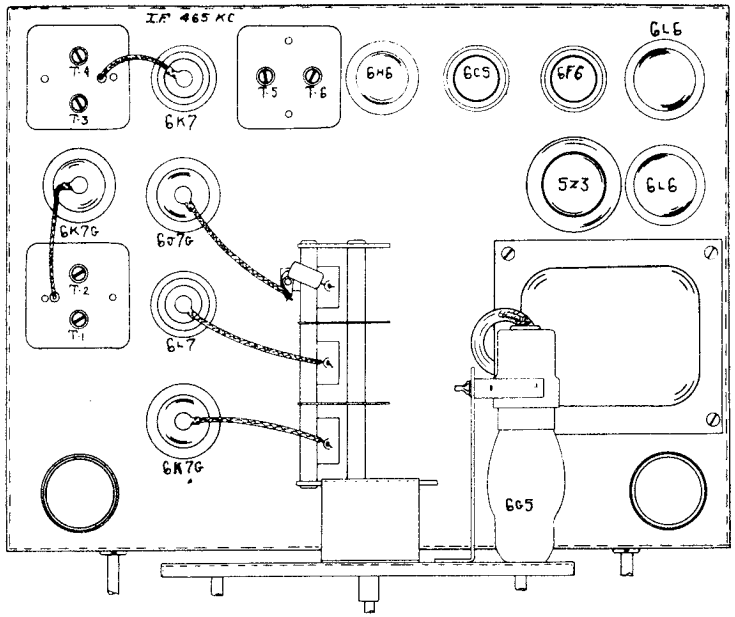

FIG. 4

NOTES ON ALIGNMENT

It is assumed that if an alignment procedure becomes necessary that the service man has an oscillator capable of accurately covering the range of the receiver and that a meter output indicator is used.

The I. F. Stages are aligned in the usual manner by feeding 465 KC into the grid of the 6L7 tube. NOTE: If oscillation is present when aligning the I. F.'s with the sensitivity control full on, reduce the sensitivity slightly until the oscillation stops.

IMPORTANT: ALIGN THE SET WITH THE SELECTIVITY CONTROL ALL THE WAY TO THE RIGHT, IN THE SHARP TUNING POSITION.

Follow Figure 4 and Figure 5 showing trimmer locations and alignment frequency.

Always adjust the oscillator first in any particular band.

Use as low an output as possible from the test oscillator in making the various adjustments.

After trimming at the high frequency end of the dial and adjusting the padding condenser at the other end, always recheck the settings of the trimmer at the high frequency end of the dial.

BE SURE THAT THE ALIGNMENT SIGNAL IS THE TRUE FUNDAMENTAL AND NOT A HARMONIC.

Check for image frequency in the usual manner.

BEFORE STARTING ALIGNMENT CHECK POSITION OF TUNING HAND AND MAKE CERTAIN THAT IT IS EXACTLY STRAIGHT ACROSS ON THE FIRST CALIBRATION LINE WHEN THE CONDENSERS ARE AT MAXIMUM CAPACITY ROTATION.

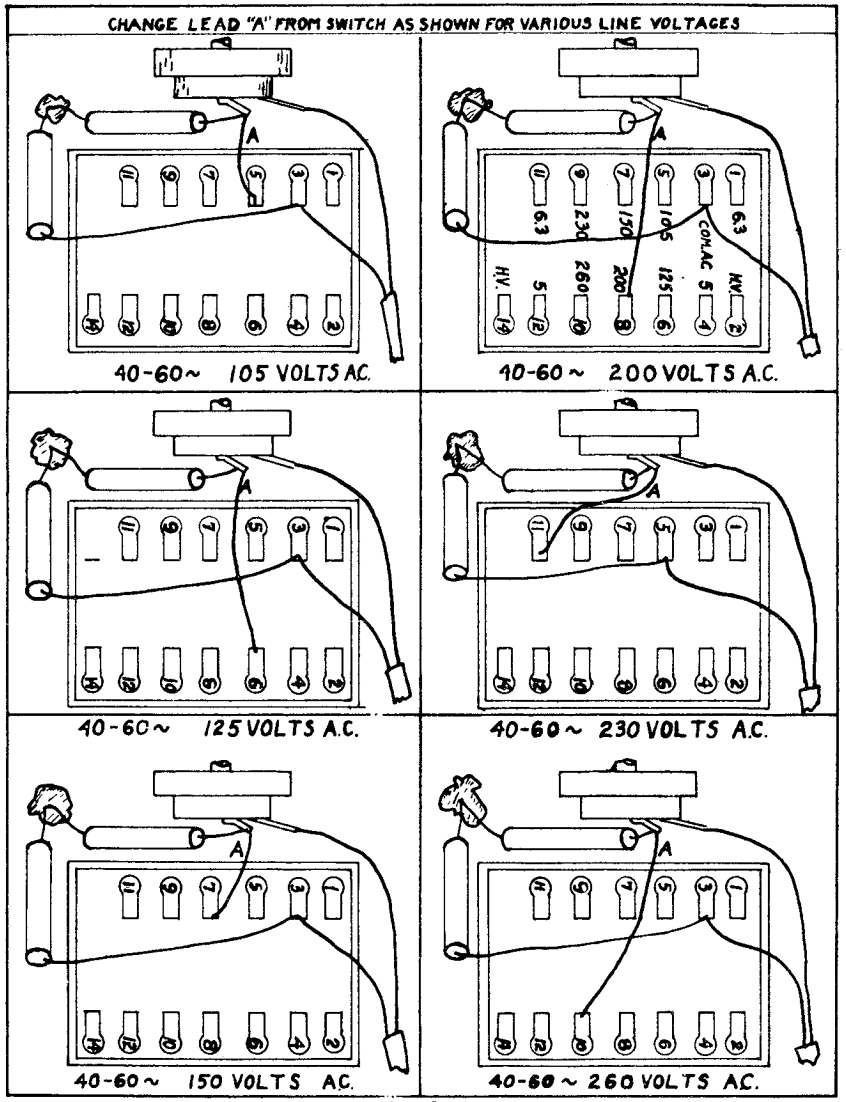

FIG. 3

©John F. Rider, Publisher

MODELS 802,812
Schematic
Phono. Data

SEARS-ROEBUCK & CO.

The Phono terminal at the back of the chassis may be used for phanograph connection.

NOTE: WHEN THE PHONOGRAPH IS NOT BEING USED BE SURE AND REMOVE CONNECTION FROM THE TERMINALS OTHERWISE THE RADIO WILL NOT WORK PROPERLY.

With some models a phono-radio switch is used by extending wires from the chassis. This circuit is shown on the schematic diagram.

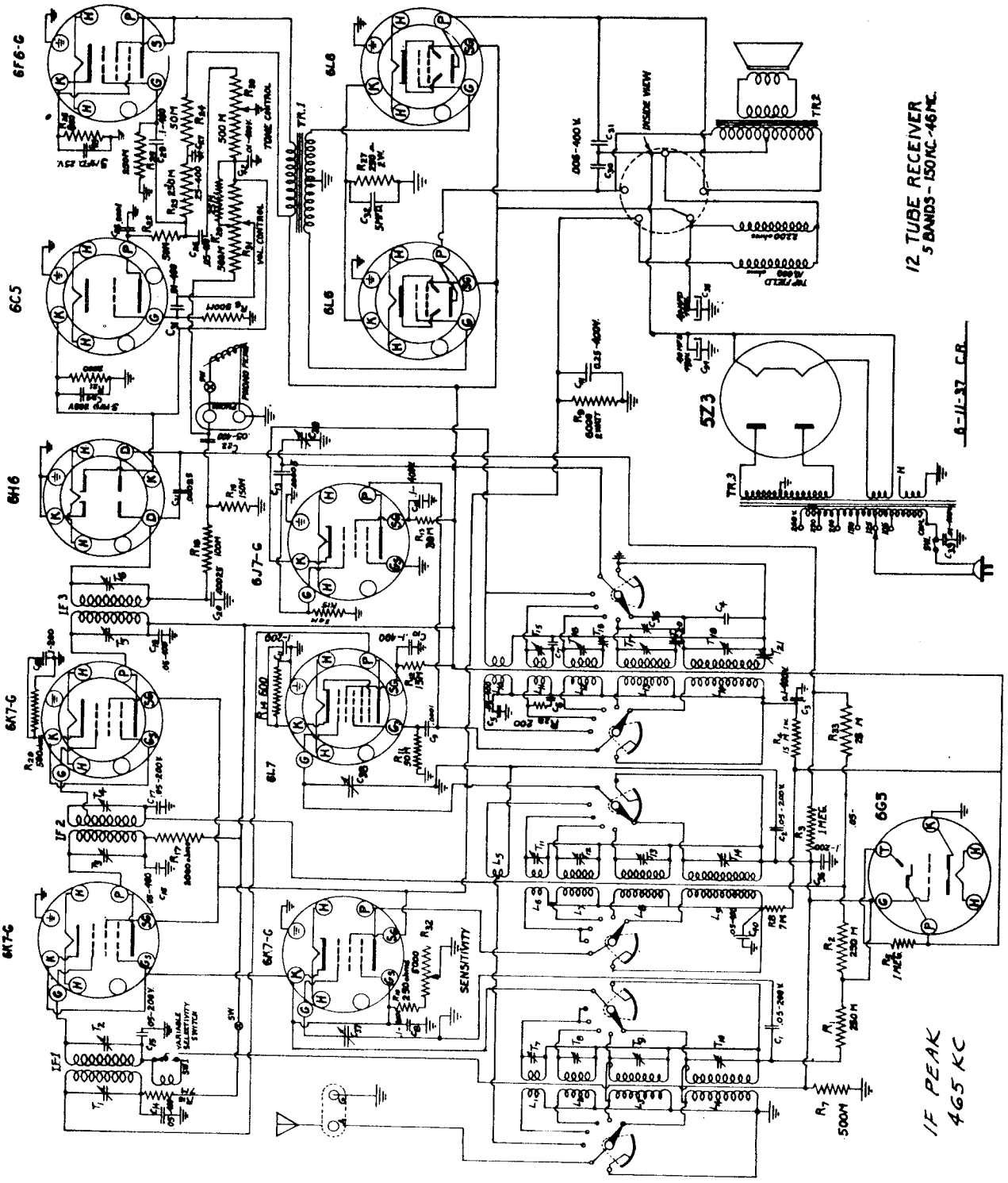

©John F. Rider, Publisher

MODELS 802,812
Trimmers,Voltage

SEARS-ROEBUCK & CO.

TUBE	POSITION	PLATE	SCREEN GRID	KATHODE	OSC. PLATE	FILAMENT
6K7-G	1st. R.F.	225 V.	105 V.	4V to 14V	-	6.25V.
6L7	Mixer	230 V.	130 V.	5.2	-	6.25V.
6J7-G	Osc.	112 V.	137 V.	-	-	6.25V.
6K7-G	1st. I.F.	217 V.	102 V.	4V to 14V	-	6.25V.
6K7	2nd. I.F.	240 V.	102 V.	4 V.	-	6.25V.
6H6-G	Diode Det.	-	-	2.4 V.	-	6.25V.
6C5	Audio	65 V.	-	2.4 V.	-	6.25V.
6F6G	Audio 2nd.	230 V.	-	16; V.	-	6.25V.
6L6	P.P. Audio	320 V.	230 V.	22 V.	-	6.25V.

SOCKET READINGS FOR MODEL A-12 SERIES

All Voltages taken from ground with line voltage 115 volts.
No load in antenna.
Sensitivity control variation changes kathode voltage.

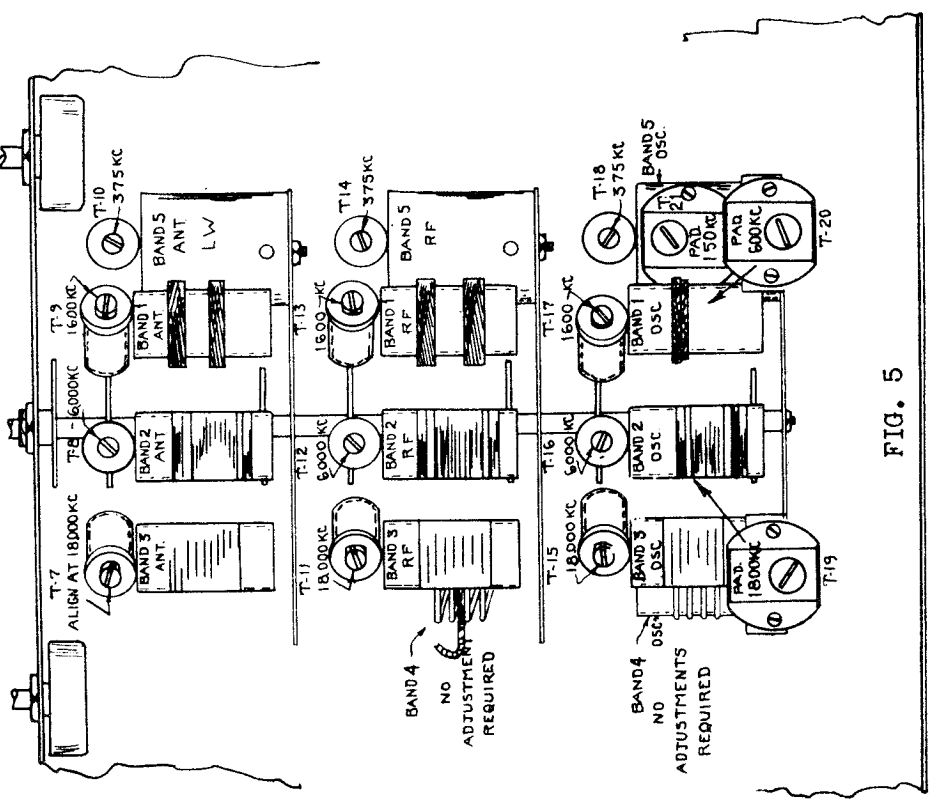

FIG. 5

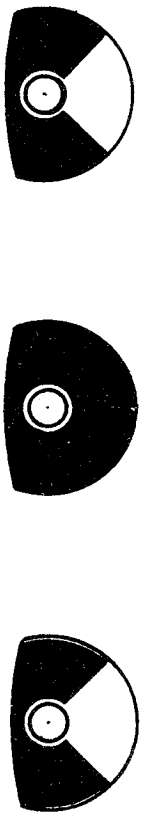

THE ELECTRIC EYE

The movement of the Electric Eye or resonance indicator is easily understood, as the station is tuned in, the green sections of the eye will draw together or tend to draw together depending upon the strength of the station. Rotate the tuning knob back and forth until the exact resonance point is found.

©John F. Rider, Publisher

SEARS-ROEBUCK & CO.

MODELS 4405A,4428A,4433,4448A
4453,4528A,4548A
Schematic,Socket,Trimmers
Chassis View,Voltage

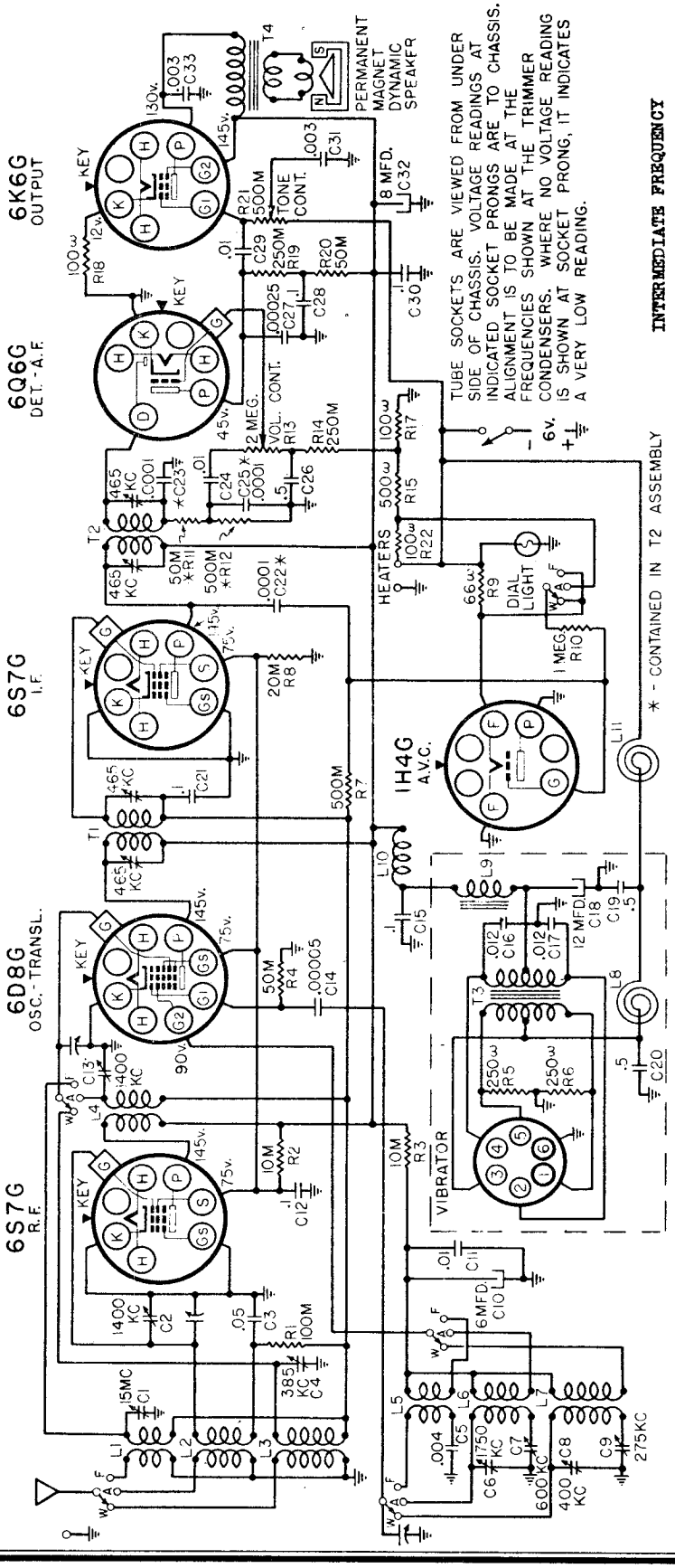

FOR OTHER DATA SEE INDEX

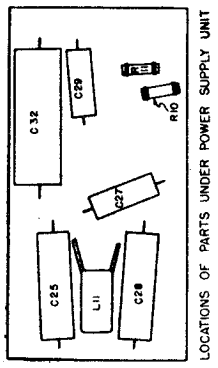

LOCATIONS OF PARTS UNDER POWER SUPPLY UNIT

57RL17

August 19, 1936

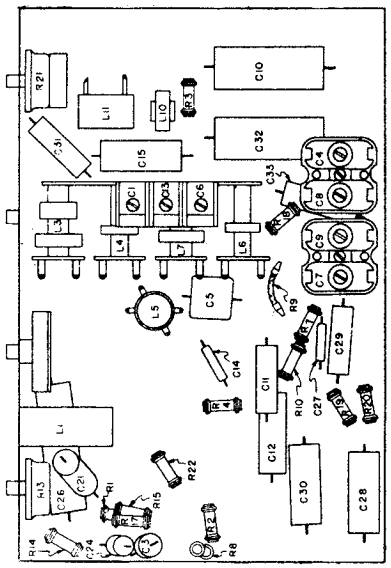

LOCATIONS OF PARTS UNDER CHASSIS

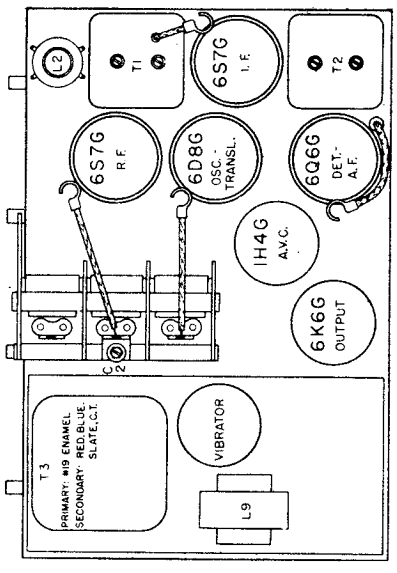

LOCATIONS OF PARTS ON TOP OF CHASSIS

©John F. Rider, Publisher

ELECTRICAL SPECIFICATIONS

TUBES AND FUNCTIONS:

6S7G - - - - - - - - RF (Band "A" only)	1H4G - - - - - - - - - - - - - - - AVC
6D8G - - - - - - Oscillator-Translator	6Q6G - - - - - - - - - - - Detector-AF
6S7G - - - - - - - - - - - - - - - - IF	6K6G - - - - - - - - - - - - - - Output

POWER SUPPLY:
All models available - - - - - - - - - - - 6 volt storage "A" battery; 3 ampere drain

FREQUENCY RANGES:

Band "W" - - - - - - - - -	220-400 kc
Band "A" - - - - - - - - -	540-1750 kc
Band "P" - - - - - - - - -	5.6-17.5 mc

ALIGNMENT FREQUENCIES:

	Oscil. Trimmer	Ant-Transl. Trimmer	Oscil. Padder
Band "W"	400 kc	385 kc	275 kc
Band "A"	1750 kc	1400 kc	600 kc
Band "P"	-	15 mc	Fixed

POWER OUTPUT:

Type - - - - - - - - -	Single Pentode
Undistorted - - - - - - - - -	.5 watts
Maximum - - - - - - - - - -	1.6 watts

LOUD SPEAKER:

Type - - -	Permanent Magnet Dynamic
Size - - - - - - - - - - - -	6½" or 8"

OPERATING FEATURES:
Fidelity Range - - 50 - 5000 cycles
Tone Control - - - - - - - - - Variable
Automatic Volume Control

CHASSIS FEATURES:
Number RF stages - One on band "A" only
Number IF stages - - - - - - - - - One
Antenna - - - - - - - - - - - Marconi
Plug-in Synchronous Vibrator

MECHANICAL SPECIFICATIONS

OPERATING CONTROLS:
1. Left knob - - - - Volume Control
2. Next to left knob - - Wave Band Switch
3. Next to right knob - - - Station Selector
4. Right knob - - "On-Off" switch and Tone Control

CONTROL OPERATION:
Turning right: volume increase
Turning right: "W", "A", "P"

Tuning ratio: 20:1

Turning right: power on; bass to treble

GENERAL INFORMATION

THE AVC CIRCUIT:

The grid of the 1H4G AVC tube is used as a diode plate. A portion of the IF signal at the plate of the 6S7G IF tube is fed to the 1H4G through the .0001 mfd. condenser, C22. The resulting diode current creates a voltage drop across the one megohm resistor, R10. This voltage is applied to the control grids of the 6S7G and 6D8G tubes to provide AVC. On bands "P" and "W" residual bias is furnished by the drop across the 1H4G tube filament. On band "A" residual bias is furnished by the drops across the resistors R17 and R15 which,in series with R22,are across the six volt supply.

REMOVING THE ESCUTCHEON:

The escutcheon is held in place with two "speed-nuts", behind the front panel. These "speed-nuts" can be loosened and removed by grasping one end of them with a pair of long-nose pliers and bending it away from the front panel of the set.

ELIMINATING WHISTLE AT 930 KC:

A whistle, due to a beat between the second harmonic (930 kc)of the 465 kc IF,and a 930 kc signal may be experienced. In localities where the 930 kc station is one that is frequently listened to, it will be desirable to shift the whistle to some other point where it will not be objectionable. This can be done by shifting the IF frequency of the receiver.

Determine at what point between 900 kc and 960 kc the whistle will be least objectionable. Dividing this frequency by two will give the new IF frequency to which the receiver should be aligned. For example, if it is determined that a whistle at 915 kc would not be objectionable, the IF should be realigned at 915/2 or 457.5 kc.

Align the IF at the new frequency and then realign the rest of the receiver as described under, "ALIGNMENT PROCEDURE".

ALIGNMENT PROCEDURE

PRELIMINARY:

Output meter connection -	Across speaker voice coil
Output meter reading to indicate 50 milliwatts - - - - - - - - - - - - - - - - - -	.45 volts
Approximate average sensitivity in microvolts for 50 milliwatts output - -	See chart below
Generator ground lead connection -	Receiver chassis
Dummy antenna value to be in series with generator output - - - - - - - -	See chart below
Connection of generator output lead -	See chart below
Generator modulation -	30%, 400 cycles
Position of volume control -	All the way on
Position of tone control -	Fully clockwise

WAVE BAND SWITCH POSITION	POSITION OF VARIABLE	GENERATOR FREQUENCY	DUMMY ANTENNA	GENERATOR CONNECTION	TRIMMER ADJUSTMENTS (IN ORDER SHOWN)	APPROXIMATE MICROVOLTS
"A"	Closed	465 kc	.1 mfd.	6D8G Grid	T2, T1	-
"A"	Fully open	1750 kc	.0002 mfd.	Antenna Lead	C6	25
"A"	1400 kc	1400 kc	.0002 mfd.	Antenna Lead	C2, C13	10
"A"	600 kc (rock)	600 kc	.0002 mfd.	Antenna Lead	C7	12
"W"	Fully open	400 kc	.0002 mfd.	Antenna Lead	C8	95
"W"	385 kc	385 kc	.0002 mfd.	Antenna Lead	C4	100
"W"	275 kc (rock)	275 kc	.0002 mfd.	Antenna Lead	C9	110
"P"	15 mc (rock)	15 mc	400 ohms	Antenna Lead	C1	18
"P"	6 mc	6 mc	400 ohms	Antenna Lead	-	75

IMPORTANT ALIGNMENT NOTES

Where indicated by the word, "Rock", the variable should be rocked back and forth a degree or two while making the adjustment.

Alignment must be made in the sequence indicated.

All of the adjustment should be repeated in their original order for greater accuracy. In particular, the band "W" adjustments should be gone over two or three times since one adjustment affects the others.

Always keep the output from the signal generator at its lowest possible value in order to make the AVC action of the receiver ineffective.

After the alignment procedure has been completed, tune in a signal at about 900 kc and, if necessary, shift the dial pointer to the station's indicated frequency on the dial.

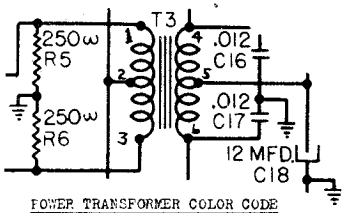

POWER TRANSFORMER COLOR CODE

1,2,3 - Solid Conductor
4 - Red
5 - Slate
6 - Blue

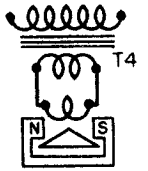

PERMANENT MAGNET DYNAMIC SPEAKER

©John F. Rider, Publisher

©John F. Rider, Publisher

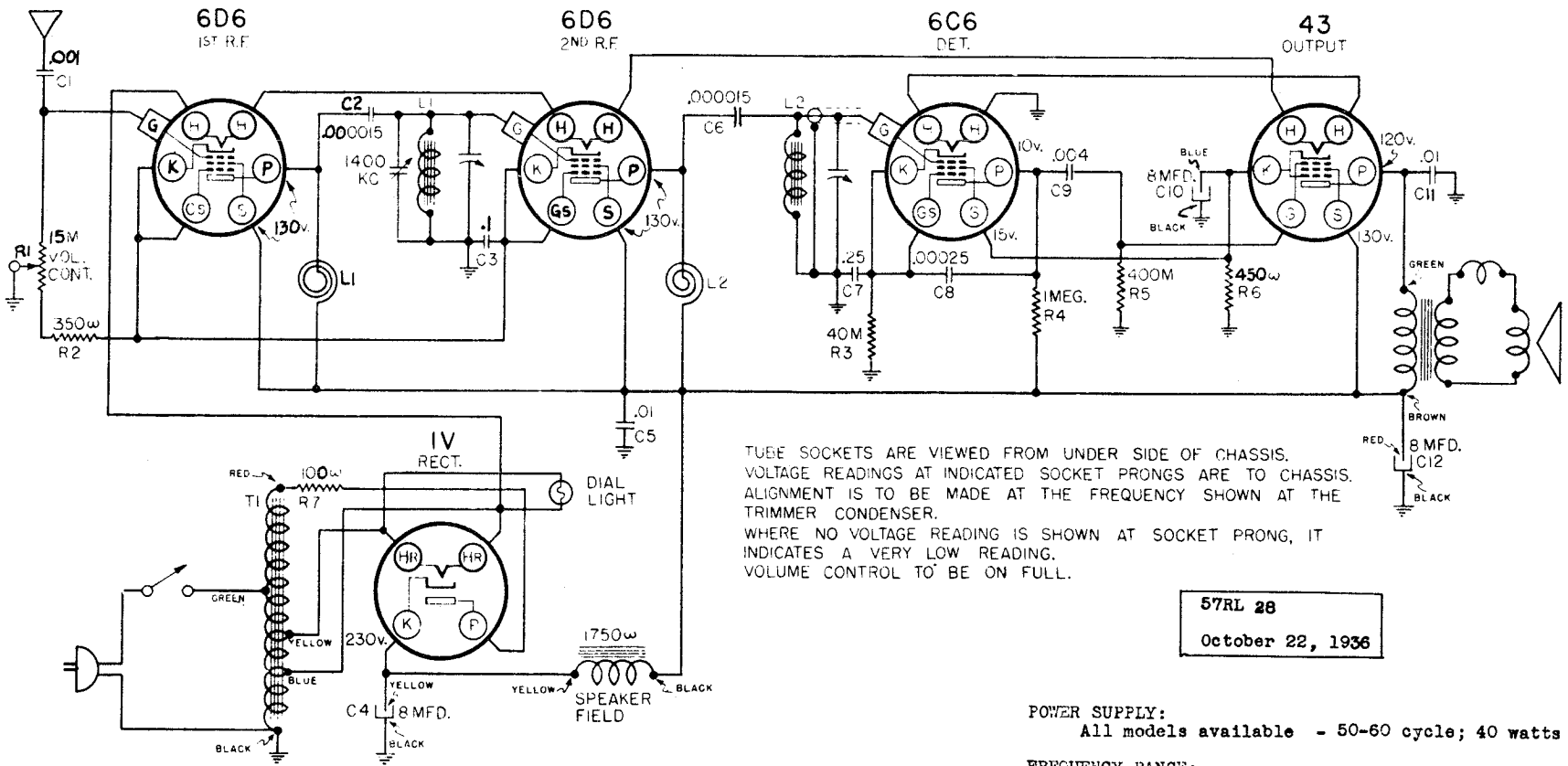

TUBE SOCKETS ARE VIEWED FROM UNDER SIDE OF CHASSIS.
VOLTAGE READINGS AT INDICATED SOCKET PRONGS ARE TO CHASSIS.
ALIGNMENT IS TO BE MADE AT THE FREQUENCY SHOWN AT THE TRIMMER CONDENSER.
WHERE NO VOLTAGE READING IS SHOWN AT SOCKET PRONG, IT INDICATES A VERY LOW READING.
VOLUME CONTROL TO BE ON FULL.

57RL 28

October 22, 1936

POWER SUPPLY:
All models available - 50-60 cycle; 40 watts

FREQUENCY RANGE:
Broadcast - - - - - - - - 545-1720 kc

POWER OUTPUT:
Type - - - - - - - - - Single Pentode
Undistorted - - - - - - - - - .98 watts
Maximum - - - - - - - - - 1.64 watts

ALIGNMENT FREQUENCY:
1400 kc

LOUD SPEAKER:
Type - - - - - - - - - - - - - Dynamic
Size - - - - - - - - - - - - - - - - - 5"
Field Coil Resistance - - - 1750 ohms
Field Coil Voltage Drop (Approximate)- 100 volts

ALIGNMENT PROCEDURE

The receiver need not be taken out of the cabinet for alignment.

Either a broadcast signal of about 1400 kc or a test oscillator signal may be used. If a broadcast signal is used, the antenna of the receiver should be extended as in a normal installation. If a test oscillator signal is used, a wire should be connected to the test oscillator output and run parallel to but insulated from the receiver's antenna wire. The generator ground connection should be connected to ground.

Tune in the 1400 kc signal and adjust the trimmer for maximum loud speaker response. This can be done most accurately if the Volume Control setting is reduced to give a low volume level. The variable should be rocked a degree or two during the adjustment. The location of this trimmer is shown in the Location of Parts diagram. It is accessible, when the chassis is in the cabinet, through the hole in the bottom of the cabinet. An insulated screw driver should be used since the chassis may be above ground potential, as explained previously.

An auto-transformer is used, instead of the usual power transformer having separate primary and secondary windings. For this reason, under certain conditions the chassis may be 115 volts above ground potential.

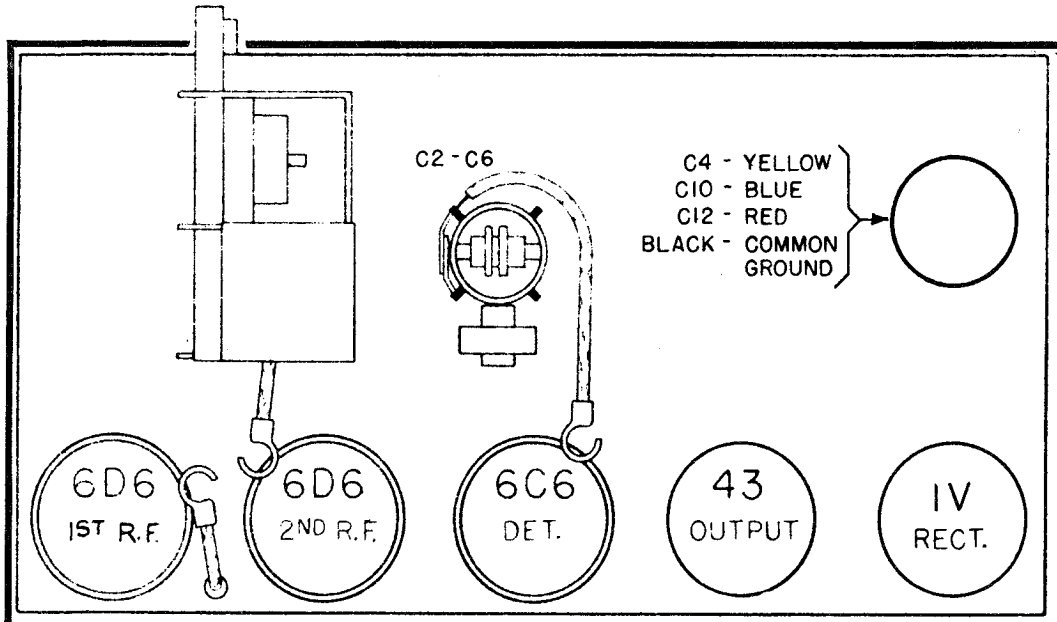

LOCATIONS OF PARTS ON TOP OF CHASSIS

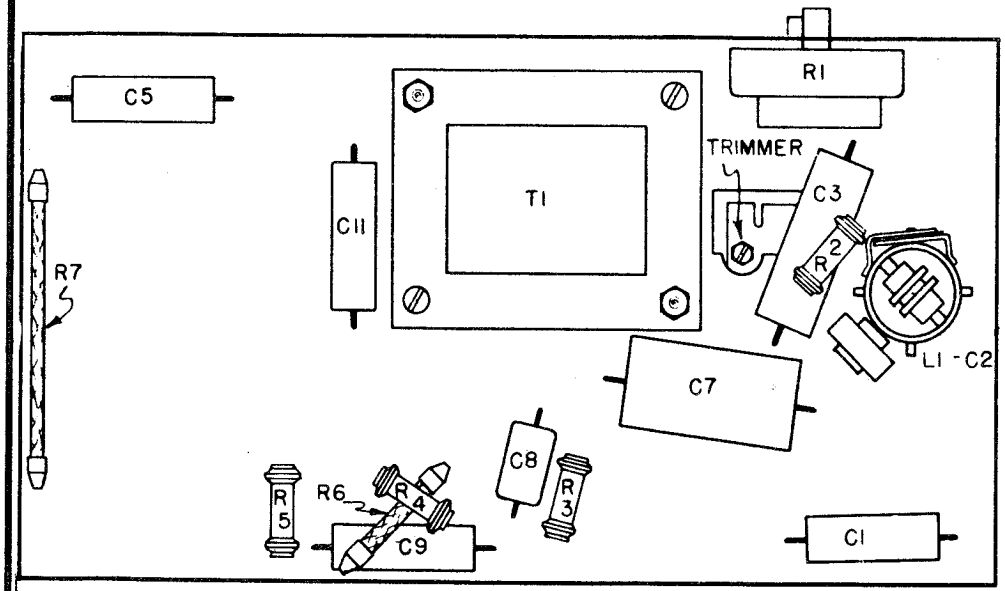

LOCATIONS OF PARTS UNDER CHASSIS.

LOCATION	PART NUMBER	DESCRIPTION
	1015514723	Antenna - Wire
	1015414200	Button - Snap, variable shield mounting
	1015414479	Clip - Grid
L1-C2, L2-C6	1012814032	Coil - RF
	1011615503	Condenser - Variable
C4,C10, C12	1012015401	Condenser - Electrolytic, triple, dry
C7		Condenser - .25 mfd. 200 V.
C3		Condenser - .1 mfd. 200 V.
C5,C11		Condenser - .01 mfd. 400 V.
C9		Condenser - .004 mfd. 400 V.
C1		Condenser - .001 mfd. 400 V.
C8		Condenser - .00025 mfd. mica
R1	1012415502	Control - Volume, with switch
	1015514721	Cord - Power
	1016015559	Cover - Cabinet back
	1014015506	Dial - Station selector
	1013915507	Knob - Volume
	1013915508	Knob - Tuning
	101492288	Lamp - Dial
R4		Resistor - 1 megohm, 1/3 watt
R5		Resistor - 400M ohms, 1/3 watt
R3		Resistor - 40M ohms, 1/3 watt
R6		Resistor - 450 ohms, 1 watt, flexible
R2		Resistor - 350 ohms, 1/3 watt
R7		Resistor - 100 ohms, 1 watt, flexible
	1015814058	Speaker - 5", Dynamic
	1015714871	Cone and voice coil
	1011514872	Field coil
	1011314873	Transformer
T1	1011014062	Transformer - Power

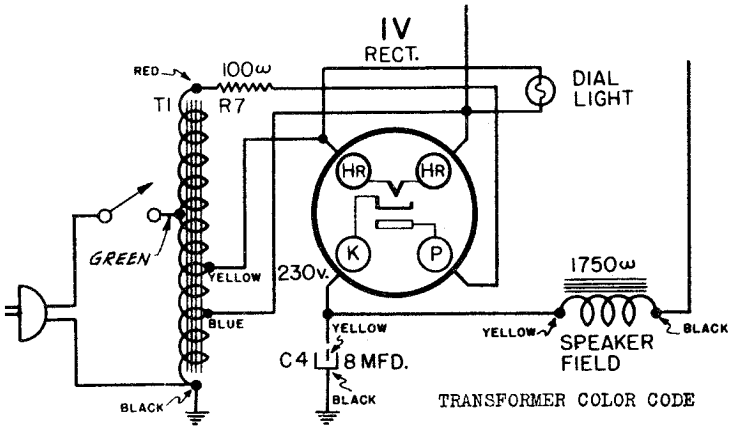

TRANSFORMER COLOR CODE

©John F. Rider, Publisher

©John F. Rider, Publisher

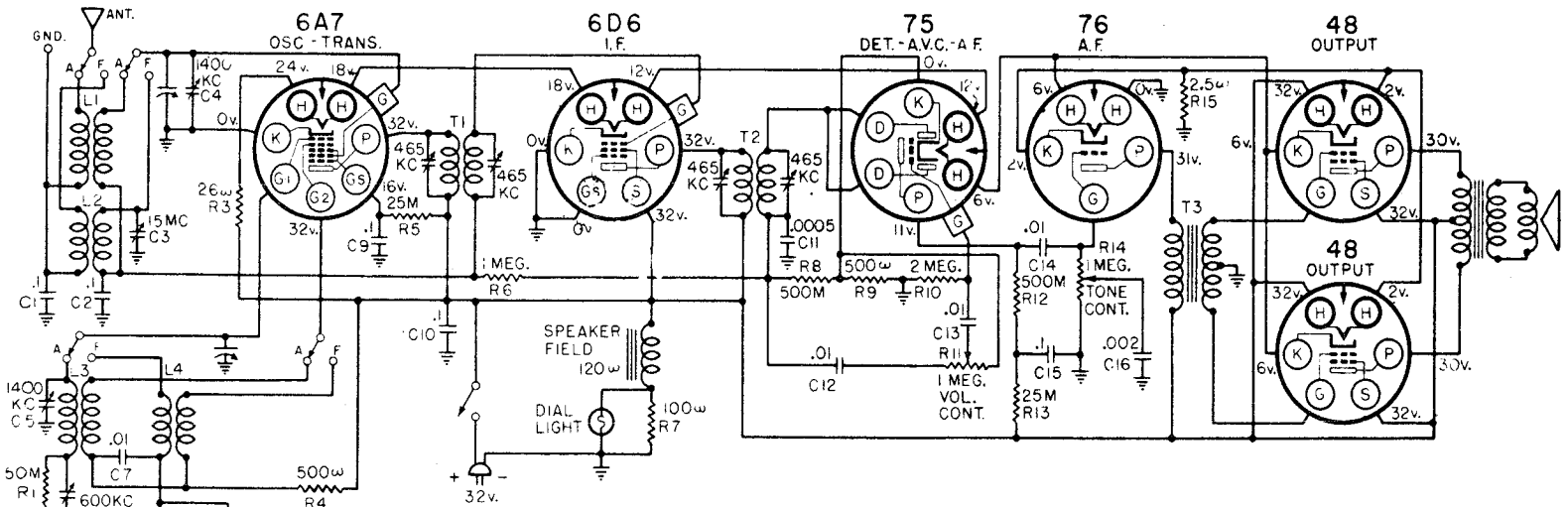

TUBE SOCKETS ARE VIEWED FROM UNDER SIDE OF CHASSIS.
VOLTAGE READINGS AT INDICATED SOCKET PRONGS ARE TO CHASSIS.
ALIGNMENT IS TO BE MADE AT THE FREQUENCIES SHOWN AT THE TRIMMER CONDENSERS.
WHERE NO VOLTAGE READING IS SHOWN AT SOCKET PRONG, IT INDICATES A VERY LOW READING.

57RL 16

August 13, 1936

ELECTRICAL SPECIFICATIONS

POWER SUPPLY:
All models available - 32 Volts, DC; 36.8 Watts

FREQUENCY RANGES:
Band "A" - - - - - - - - 540-1750 kc
Band "F" - - - - - - - - 5475-16500 kc

ALIGNMENT FREQUENCIES:

	Ant-Transl. Trimmer	Oscil. Trimmer	Oscil. Padder
Band "A"	1400 kc	1400 kc	600 kc
Band "F"	15 mc	-	Fixed

INTERMEDIATE FREQUENCY - 465 kc

POWER OUTPUT:
Type - - - - - - - - - - - - Push-Pull
Undistorted - - - - - - - - .15 watts
Maximum - - - - - - - - - - .32 watts

LOUD SPEAKER:
Type - - - - - - - - - - - - - Dynamic
Size - - - - - - - - - - - - - - - - 6"
Field Coil Resistance - - - 120 ohms

OPERATING FEATURES:
Fidelity Range - - 50 - 5000 cycles
Tone Control - - - - - - - - Variable
Automatic Volume Control

CHASSIS FEATURES:
Number IF stages - - - - - - - - - One
Antenna - - - - - - - - - Conventional
Push-Pull Output

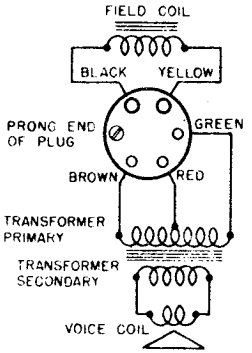

SPEAKER CONNECTIONS

MODELS 4429,4449
4529,4549
Socket,Trimmers
Chassis

SEARS-ROEBUCK & CO.

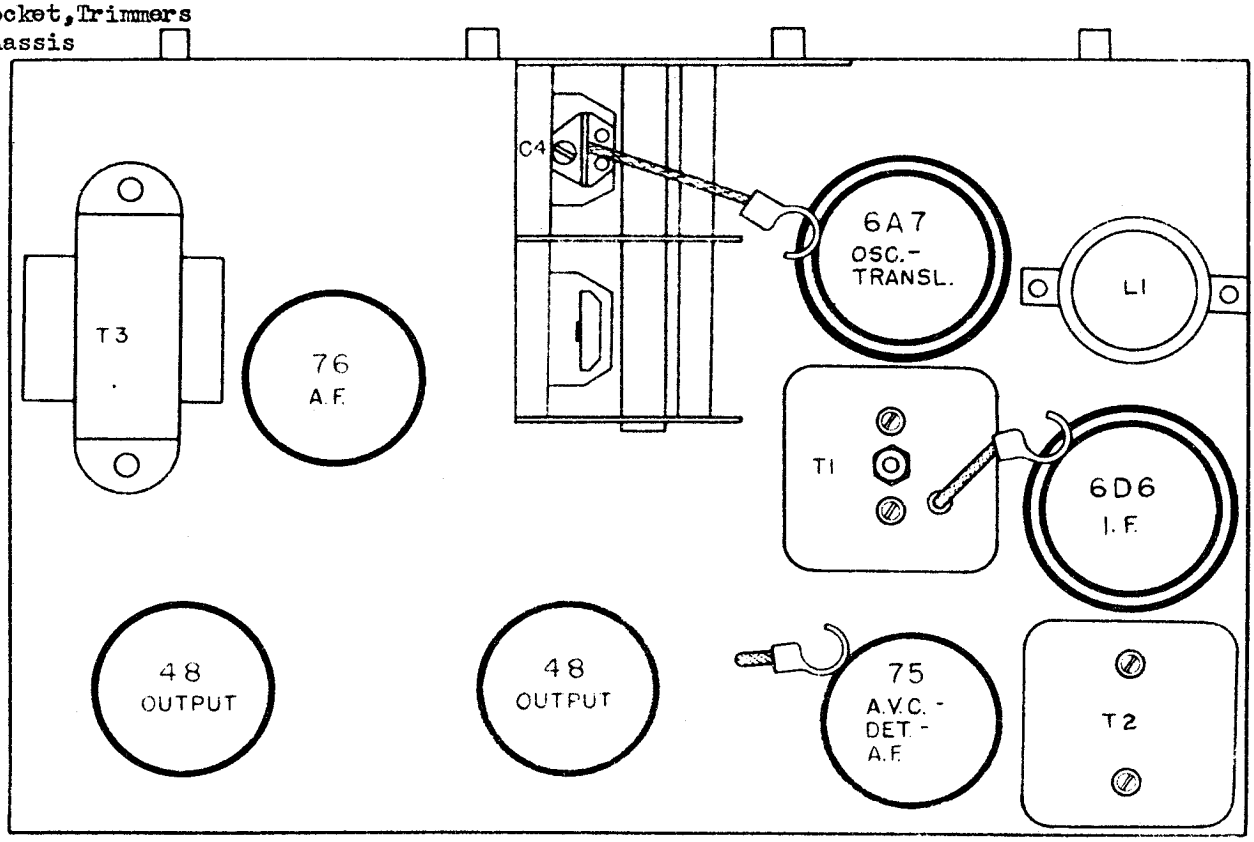

LOCATIONS OF PARTS ON TOP OF CHASSIS

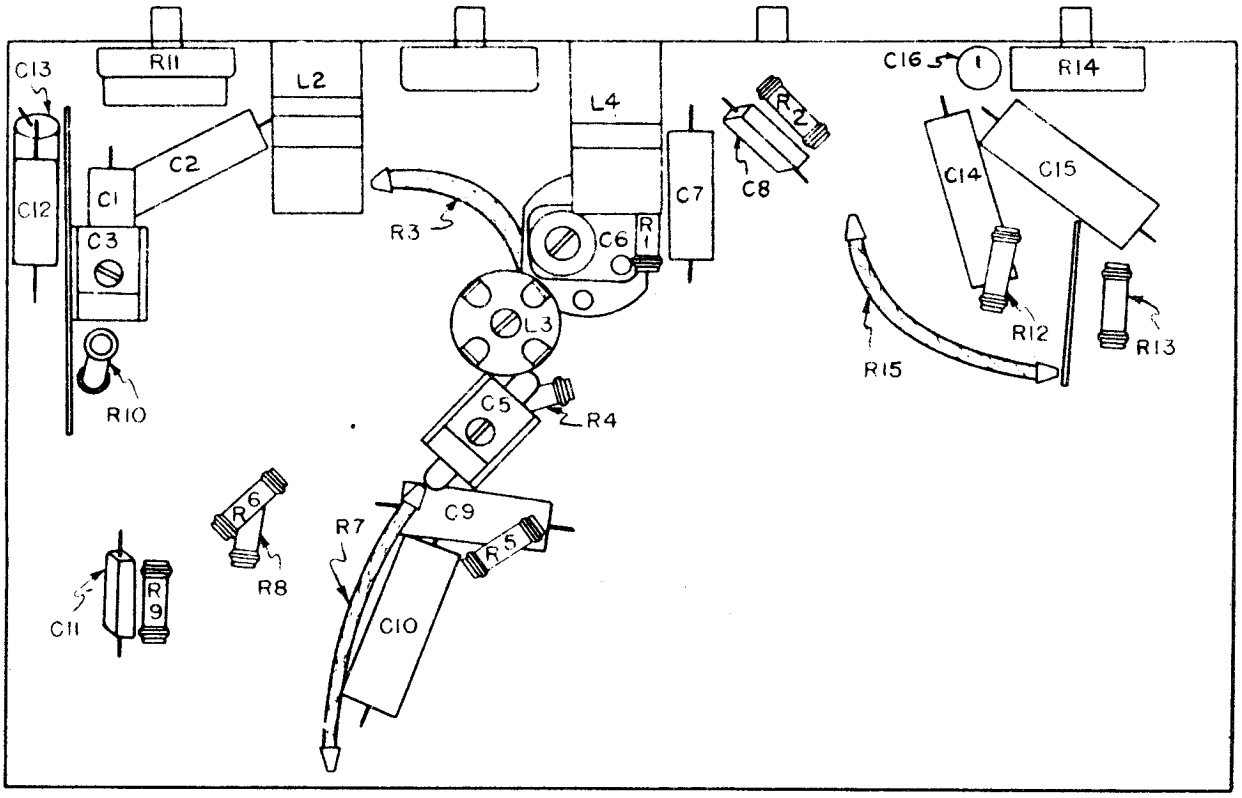

LOCATIONS OF PARTS UNDER CHASSIS

©John F. Rider, Publisher

SEARS-ROEBUCK & CO.

MODELS 4429,4449
4529,4549
Alignment,Notes

ALIGNMENT PROCEDURE

Output meter connection - Across speaker voice coil

Output meter reading to indicate 50 milliwatts output - - - - - - - - - - - - - - .45 volts

Approximate average sensitivity in microvolts for 50 milliwatts output - - - See chart below

Dummy antenna value to be in series with generator output - - - - - - - - - See chart below

Connection of generator output lead - See chart below

Generator ground lead connection - To receiver chassis

Generator modulation - 30%, 400 cycles

Position of volume control - Fully clockwise

Position of tone control - Fully clockwise

Position of dial pointer - - - - - - - - Along center line of dial with variable fully meshed

WAVE BAND SWITCH POSITION	POSITION OF DIAL POINTER	GENERATOR FREQUENCY	DUMMY ANTENNA	GENERATOR CONNECTION	TRIMMERS ADJUSTED (IN ORDER SHOWN)	MICROVOLTS
"A"	1000 kc	465 kc	.1 mfd.	6A7 Grid	T2,T1	-
"A"	1400 kc	1400 kc	.0002 mfd.	Antenna Lead	C5,C4	35
"A"	600 kc (rock)	600 kc	.0002 mfd.	Antenna Lead	C6	25
"F"	15 mc (rock)	15 mc	400 ohms	Antenna Lead	C3	30
"F"	6 mc	6 mc	400 ohms	Antenna Lead	-	125

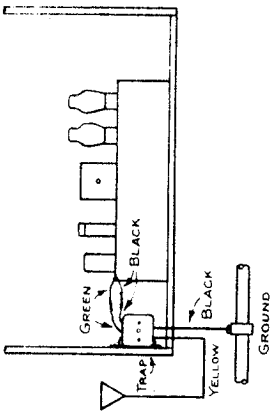

IMPORTANT ALIGNMENT NOTES

Where indicated by the word, "Rock", the variable should be rocked back and forth a degree or two while making the adjustment.

The figures given in the "Microvolts" column are only approximate.

The alignment procedure should be repeated stage by stage, in the original order, for greatest accuracy. Always keep the output from the test oscillator at its lowest possible value to make the AVC action of the receiver ineffective.

After the alignment procedure has been completed, tune in a broadcast station at about 900 kc and, if necessary, shift the dial pointer to the station's frequency marking on the dial.

ELIMINATING WHISTLE AT 930 KC:

A whistle, due to a beat between the second harmonic (930 kc)of the 465 kc IF,and a 930 kc signal may be experienced. In localities where the 930 kc station is one that is frequently listened to, it will be desirable to shift the whistle to some other point where it will not be objectionable. This can be done by shifting the IF frequency of the receiver.

Determine at what point between 900 kc and 960 kc the whistle will be least objectionable. Dividing this frequency by two will give the new IF frequency to which the receiver should be aligned. For example, if it is determined that a whistle at 915 kc would not be objectionable, the IF should be realigned at 915/2 or 457.5 kc.

Align the IF at the new frequency and then realign the rest of the receiver as described under, "ALIGNMENT PROCEDURE".

CHANGE TO REDUCE MINIMUM VOLUME:

If the minimum volume is not low enough, examine the Volume Control, R11. If one side of the control is connected to ground, disconnect it from the ground and run the connection to the cathode of the 75 tube. It is shown wired this way in the Schematic Wiring Diagram.

WAVE-TRAP TO ELIMINATE INTERFERENCE FROM SHIP OR AIRPORT TRANSMITTERS:

In locations near ship transmitters or airports or air beacon stations, code interference may be experienced. Part #1013114256 wave-trap is designed to eliminate such interference.

Mount the trap, by means of two wood screws, at any convenient place on the chassis shelf or cabinet where it will be near the antenna terminal of the receiver. Connect the yellow lead of the wave-trap to the antenna downlead. Splice the green lead of the wave-trap to the green antenna lead of the receiver. Cut off any excess length of wire from the trap and from the chassis antenna lead so that the green lead from the wave-trap to the chassis is as short as possible. The yellow lead from the wave-trap should be run so that it is as far as possible from the green lead. Splice one of the black leads from the wave-trap to the black ground lead of the receiver. Connect the other wave-trap black lead to the ground used for the installation.

The trap is pre-tuned to the IF frequency so that normally no further adjustment is necessary. However, should interference still be experienced, tune the receiver between approximately 550 and 600 kc. Then adjust the wave-trap, by means of the trimmer screw at the bottom of the container, until the interference is eliminated. Addition of the trap will reduce the sensitivity of the receiver around 600 kc by approximately 50%. The customer should be forewarned of this to avoid complaints of reduced sensitivity.

THE NOISE SUPPRESSION EQUIPMENT:

Two condensers and a suppressor are supplied for eliminating the electrical interference created by the gasoline engine that drives the 32 volt lighting plant generator.

In single cylinder installations, cut the high tension wire going to the spark plug and screw the suppressor onto the two ends of the wire. In multi-cylinder installations, cut the high tension wire going to the center terminal of the distributor cap and screw the suppressor onto the two ends of the wire.

Connect one of the condensers between the two generator brushes. Ground the generator frame. Connect the other condenser from the battery side of the ignition coil to ground.

©John F. Rider, Publisher

MODELS 1942,1972,1994
Chassis 391Y

SEARS-ROEBUCK & CO.

Chassis,Alignment
Sensitivity

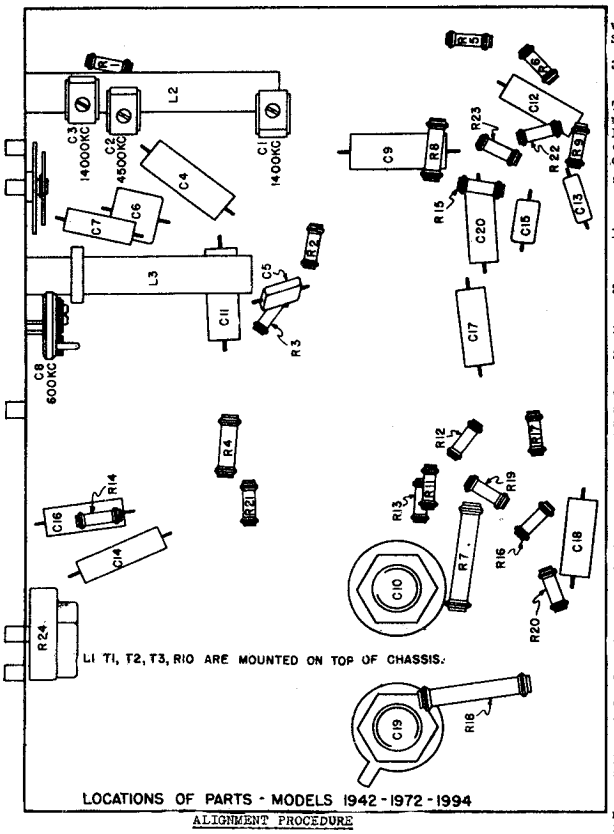

LOCATIONS OF PARTS - MODELS 1942-1972-1994

ALIGNMENT PROCEDURE

IF ALIGNMENT

1. Connections:

Connect the ground lead of the test oscillator to the receiver chassis. Connect the output lead of the test oscillator, in series with a .1 mfd condenser, to the various points mentioned below for alignment. Connect the low scale of an output meter across the loud speaker voice coil. A reading of one volt or less will be obtained during most of the alignment. Connect a jumper between the "B" and "C" terminals of the antenna terminal block at the rear of the chassis.

2. Receiver Settings:

Turn the Wave Band switch to the BROADCAST position and the Station Selector to about 550 kc. Turn the receiver Volume Control all the way on, the Tone Control to its brilliant position (clockwise), and the Selectivity Control to its #1 position (sharp).

3. Alignment:

(a) Set the test oscillator to 175 kc. Connect the output lead of the test oscillator (in series with a .1 mfd condenser) to the control grid of the 6K7MG IF tube. Peak the IF output transformer, T2. This transformer is the square can unit mounted at the extreme left rear corner of the chassis, as one faces the rear of the chassis.

(b) Change the test oscillator output lead connection to the control grid of the 6A8MG oscillator-translator tube. Peak the IF input transformer, T1. This transformer is the square can unit with a grid lead coming out of its top.

(c) Repeat the adjustments in their original order for greater accuracy. (Change the test oscillator output lead back to the 6K7MG tube for T2 adjustment and then connect it to the 6A8MG tube again for T1 adjustment.) Always keep the test oscillator output at its lowest possible value.

RF ALIGNMENT

Important:

Alignment of band "B" or "C" affects the alignment of the other lower frequency bands. Therefore, band "C" must be aligned first, then band "B", then band "A".

SHORT WAVE BAND "C" ALIGNMENT

1. Connections:

Connections for band "C" alignment are the same as for IF alignment except that the .1 mfd condenser is disconnected from the output lead of the test oscillator. In its stead a 400 ohm carbon resistor is to be connected from the test oscillator output lead to the "A" terminal on the antenna terminal block at the rear of the chassis.

2. Receiver Settings:

Turn the Volume Control all the way on, the Tone Control all the way to the right, the Wave Switch to the "C" position, and the Variable Selectivity Control to its #1 position.

3. Alignment:

(a) Set the test oscillator to 14,000 kc and tune in its signal. Then adjust the short wave translator trimmer, C3, for maximum output meter reading. Locations of all of the trimmers are shown in the Location of Parts Illustration. The variable should be rocked a degree or two while making the adjustment. If two peaks are found at two different settings of C3, use the adjustment in which the trimmer is screwed further in (greater capacity).

SHORT WAVE BAND "B" ALIGNMENT

1. Connections:

Connections remain the same as for band "C" alignment.

2. Receiver Settings:

Turn the Wave Band switch to the "B" position. Other settings remain the same as for band "C" alignment.

3. Alignment:

(a) Set the test oscillator to 4500 kc and tune in its signal. Then peak the translator trimmer, C2. The variable should be rocked a degree or two during the adjustment. If two peaks can be obtained at two different settings of the trimmer, use the adjustment in which the trimmer is screwed further in (greater capacity).

BROADCAST BAND "A" ALIGNMENT

1. Connections:

Connections remain the same as for band "B" alignment except that the 400 ohm resistor is removed from the test oscillator output lead and a .0002 mfd mica condenser connected in its place.

2. Receiver Settings:

Turn the Wave Band switch to the BROADCAST ("A") position. All other settings remain the same as for band "B" alignment.

3. Alignment:

(a) Set the test oscillator to 1400 kc and tune in its signal. Then peak the broadcast antenna and translator trimmers. The antenna trimmer is the one on the middle section of the variable condenser. The broadcast translator trimmer, C1, is mounted on the translator coil as shown in the Location of Parts Illustration.

(b) Set the test oscillator to 600 kc and tune in its signal. Peak the broadcast oscillator padding condenser, C8. The variable should be rocked a degree or two during the adjustment.

(c) Repeat the 1400 kc adjustments and then the 600 kc adjustment for greater accuracy. Always keep the test oscillator output at its lowest possible value.

(d) Recheck the setting of band "C" translator trimmer, C3, at 14,000 kc.

Dial Calibration:

Set the test oscillator to 900 kc and tune in its signal, or tune in a 900 kc station. Then set the dial pointer to 900 kc without changing the setting of the variable condenser.

Adjustment To Minimize Image Response:

1. Set the test oscillator to 1000 kc and tune in its signal. If the test oscillator output is calibrated it should be set to .1 volts. Leaving the receiver tuned to 1000 kc, change the test oscillator frequency until the image is heard. This will occur when the test oscillator is tuned to 1350 kc.

2. There is a yellow lead running from the Wave Switch to one side of the translator trimmer condenser, C3. The image response can be minimized by placement of this yellow lead.

SENSITIVITIES

The following are approximate sensitivities but they will serve as a guide in trouble shooting. In order to make the measurements a test oscillator having a calibrated attenuator must be used. The figures given are those required to obtain an output meter reading of 1.1 volts. Readings for the IF stage are to be made with a .1 mfd condenser, in series with the test oscillator output lead. Readings for the Broadcast band are with a .0002 mfd mica condenser, and for the Short Wave bands with a 400 ohm carbon resistor in series with the test oscillator output lead, as used during the alignment procedure. The receiver Volume Control must be turned all the way to the right, the Tone Control all the way to the right and the Selectivity switch to its #1 position.

	Test Oscillator Connected To:	Frequency	Microvolts To Secure 1.1 Volts Output Meter Reading
Stage Gains	6K7MG - Grid	175 kc	5000
	6A8MG - Grid	175 kc	70
	6A8MG - Grid	1000 kc	60
	Stator - Middle section of Variable	1000 kc	70
Band "A"	Antenna	600 kc	20
	Antenna	1000 kc	25
	Antenna	1400 kc	25
Band "B"	Antenna	1800 kc	35
	Antenna	3000 kc	25
	Antenna	4500 kc	25
Band "C"	Antenna	6000 kc	40
	Antenna	10000 kc	25
	Antenna	14000 kc	15

©John F. Rider, Publisher

MODELS 4431, 4432, 4435, 4436, 4531
Schematic, Voltage Specifications

SEARS-ROEBUCK & CO.

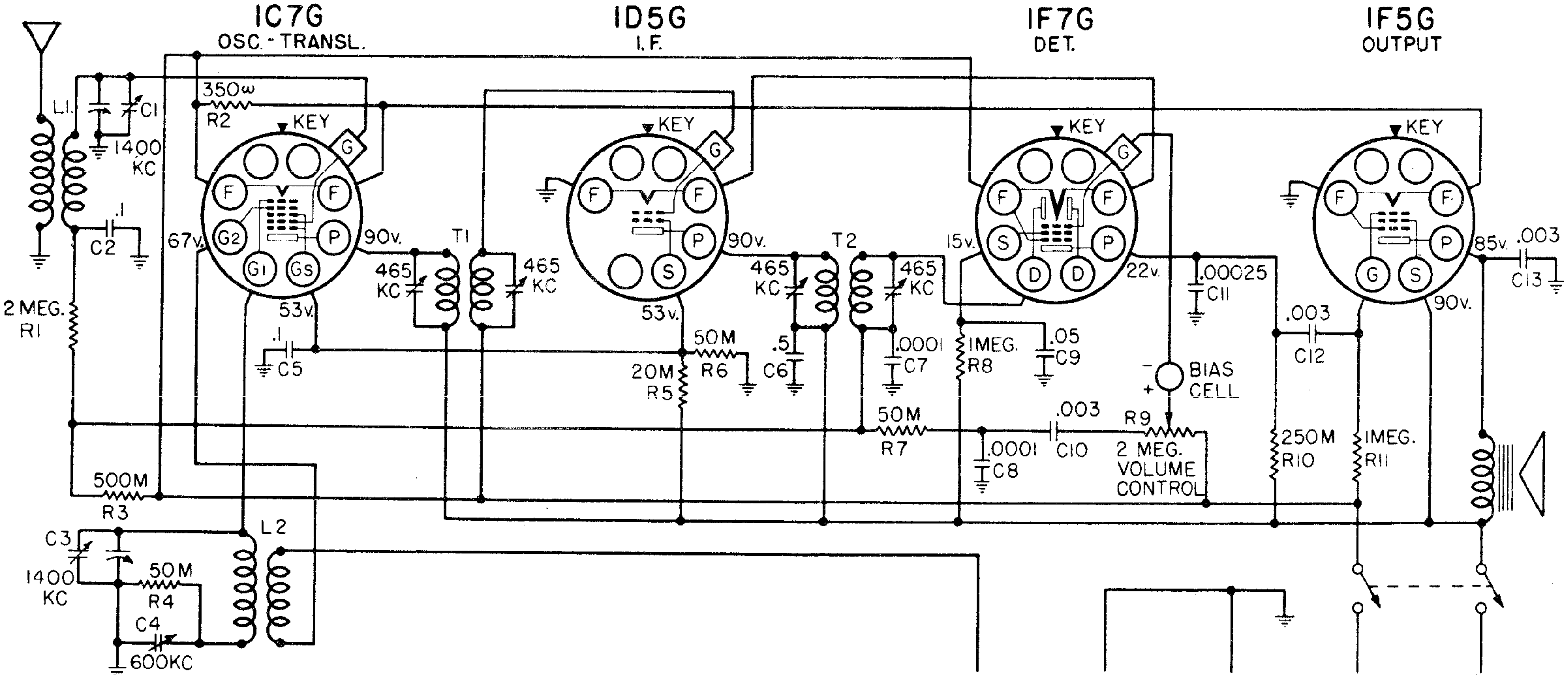

VOLUME CONTROL MUST BE ON FULL.
TUBE SOCKETS ARE VIEWED FROM UNDER SIDE OF CHASSIS.
VOLTAGE READINGS AT INDICATED SOCKET PRONGS ARE TO CHASSIS.
ALIGNMENT IS TO BE MADE AT THE FREQUENCIES SHOWN AT THE TRIMMER CONDENSERS.
WHERE NO VOLTAGE READING IS SHOWN AT SOCKET PRONG, IT INDICATES A VERY LOW READING.

57RL 30
November 12, 1936

POWER SUPPLY:
"A" Battery (4½ volt dry) - 1 - #5031P
"A" Battery (4 volt storage) 1 - #5049
"B" Ba tteries - - - - - - - - 2 - #5503P

"A" Drain - - - - - - - - - .18 amperes
"B" Drain - - - - - - - - - - - - 12 ma

FREQUENCY RANGE:
Broadcast - - - - - - - - 540-1750 kc

ALIGNMENT FREQUENCIES:

Oscillator Trimmer	Translator Trimmer	Padder
1750 kc.	1400 kc.	600 kc

INTERMEDIATE FREQUENCY - 465 kc

POWER OUTPUT:
Type - - - - - - - - - - Single Pentode
Undistorted - - - - - - - - - .14 watts
Maximum - - - - - - - - - - .24 watts

LOUD SPEAKER:
Type - - - - - - - - - - - - - Magnetic
Size - - - - - - - - - - - - - - 6 inch
DC resistance - - - - - App.1000 ohms

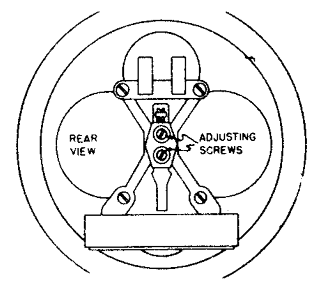

©John F. Rider, Publisher

MODELS 4431,4432,4435
4436,4531

SEARS-ROEBUCK & CO.

Alignment,Sensitivity
Socket,Trimmers,Chassis

PRELIMINARY:

Output meter connections - - - - - - - - 4000 ohm meter, in series with a .5 mfd. condenser, across speaker terminals.

Output meter reading to indicate 50 milliwatts - 8.5 volts.

Average sensitivity in microvolts for 50 milliwatts output - - - - - - - - - See chart below

Generator ground lead connection - Receiver chassis

Dummy antenna value to be in series with generator output - - - - - - - - - See chart below

Connection of generator output lead - See chart below

Generator modulation - 30%, 400 cycles

Position of Volume Control - Fully on

POSITION OF VARIABLE	GENERATOR FREQUENCY	DUMMY ANTENNA	GENERATOR CONNECTION	TRIMMER ADJUSTMENTS (IN ORDER SHOWN)	TRIMMER FUNCTION	APPROXIMATE MICROVOLTS
Closed	465 kc	.1 mfd.	1C7G Transl. Grid	T2,T1	IF	150
Fully Open	1750 kc	.0002 mfd.	Antenna Lead	C3	Osc. Trim.	150
1400 kc.	1400 kc	.0002 mfd.	Antenna Lead	C1	Transl. Trimmer	90
600 kc (rock)	600 kc	.0002 mfd.	Antenna Lead	C4	Osc. Pad.	45

IMPORTANT ALIGNMENT NOTES

The variable should be rocked back and forth a degree or two while making the 600 kc adjustment.

The alignment procedure should be repeated in the original order, step by step, to insure greater accuracy.

Always keep the output power from the generator at its lowest possible value to prevent the AVC of the receiver from interfering with accurate alignment.

After the alignment has been completed, check the calibration by tuning in a broadcast station at about 900 kc. Adjust the dial pointer to the station's frequency, if necessary.

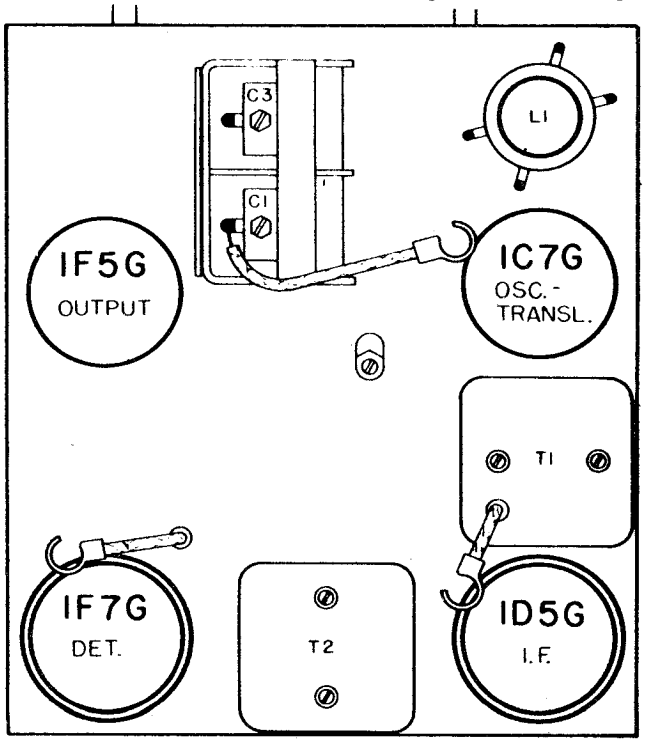

LOCATIONS OF PARTS ON TOP OF CHASSIS.

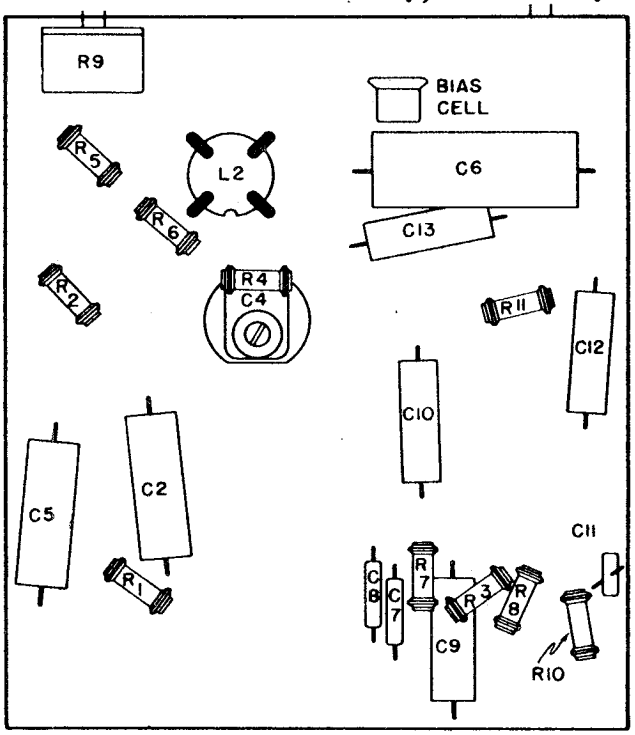

LOCATIONS OF PARTS UNDER CHASSIS.

©John F. Rider, Publisher

©John F. Rider, Publisher

SCHEMATIC LOCATION	PART NUMBER	DESCRIPTION
	1014114137	Adapter - Dial pointer
	1014614081	Bearing - Dial drive shaft
	1015415563	Board - Bias, cell mtg.
	1015413407	Bushing - Rubber mounting
	1014114358	Bushing - Dial protecting
	1015515623	Cable - Battery
	1012715564	Cell - Bias
	1015412808	Clip - Grid
L1	1012814084	Coil - Antenna
L2	1012814085	Coil - Oscillator
	1011614079	Condenser - Variable
C4	1011714433	Condenser - Padder
C6		Condenser - .5 mfd. 200 V.
C2,C5		Condenser - .1 mfd. 200 V.
C9		Condenser - .05 mfd. 200 V.
C10,C12,C13		Condenser - .003 " 400 V.
C11		Condenser - .00025 mfd. mica
C7,C 8		Condenser - .0001 mfd. mica
R9	1012415547	Control - Volume, with switch
	10145139742	Cord - Condenser drive, with spring
	10140140891	Dial - Station selector
	10145139996	Drum - Condenser drive
	1014414092	Escutcheon - With glass
	1013914094	Knob - Tuning
	1013914095	Knob - Volume
	1015915654	Leaflet - Instruction
	1015414400	Nut - Escutcheon mtg.
	10141140781	Pointer - Dial
R1		Resistor - 2 megohms, 1/3 watt
R8,R11		Resistor - 1 megohm, 1/3 watt
R3		Resistor - 500M ohms, 1/3 watt
R10		Resistor - 250M ohms, 1/3 watt
R4,R6,R7		Resistor - 50M ohms, 1/3 watt
		Resistor - 50M ohms, 1/3 watt
R5		Resistor - 20M ohms, 1/3 watt
R2		Resistor - 350 ohms, 1/3 watt
	1014614082	Shaft - Condenser drive
	1015315648	Shield - Tube
	1011813173	Socket - 8 prong, Octal
	1015814136	Speaker - Magnetic
	1015715089	Cone
	1011515090	Actuating coils
	1014513948	Spring - Condenser drive cord
T1	10133155441	Transformer - IF Input
T2	1013515546	Transformer - IF Output

ELIMINATING WHISTLE AT 930 KC:

A whistle, due to a beat between the second harmonic (930 kc) of the 465 kc IF, and a 930 kc signal may be experienced. In localities where the 930 kc station is one that is frequently listened to, it will be desirable to shift the whistle to some other point where it will not be objectionable. This can be done by shifting the IF frequency of the receiver.

Determine at what point between 900 kc and 960 kc the whistle will be least objectionable. Dividing this frequency by two will give the new IF frequency to which the receiver should be aligned. For example, if it is determined that a whistle at 915 kc would not be objectionable, the IF should be realigned at 915/2 or 457.5 kc.

Align the IF at the new frequency and then realign the rest of the receiver as described under, "ALIGNMENT PROCEDURE".

THE AVC CIRCUIT:

The diode current of the 1F7G tube, flowing through the 500M ohm resistor, R3, creates a voltage drop across it. This voltage is applied to the control grid of the 1C7G tube to provide AVC.

BATTERY REPLACEMENT:

The dry "A" battery should be replaced when its voltage drops to 3.4 volts, under load. The "B" batteries should be replaced when the total voltage has dropped to 68 volts, under load.

WAVE TRAP TO ELIMINATE INTERFERENCE FROM SHIP OR AIRPORT TRANSMITTERS:

In locations near ship transmitters or airports or air beacon stations, code interference may be experienced. Part #1013114256 wave-trap is designed to eliminate such interference.

Mount the trap, by means of two wood screws, at any convenient place on the chassis shelf or cabinet where it will be near the antenna terminal of the receiver. Connect the yellow lead of the wave-trap to the antenna downlead. Splice the green lead of the wave-trap to the green antenna lead of the receiver. Cut off any excess length of wire from the trap and from the chassis antenna lead so that the green lead from the wave trap to the chassis is as short as possible. The yellow lead from the wave-trap should be run so that it is as far as possible from the green lead. Splice one of the black leads from the wave-trap to the black ground lead of the receiver. Connect the other wave-trap black lead to the ground used for the installation.

The trap is pre-tuned to the IF frequency so that normally no further adjustment is necessary. However, should interference still be experienced, tune the receiver between approximately 550 and 600 kc. Then adjust the wave-trap, by means of the trimmer screw at the bottom of the container, until the interference is eliminated. Addition of the trap will reduce the sensitivity of the receiver around 600 kc by approximately 50%.

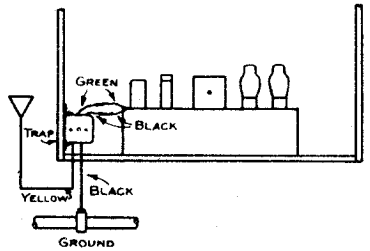

CHASSIS FEATURES:

Number RF stages	None
Number IF stages	One
Number condensers in gang	Two
Antenna	Conventional
Dial calibrated in kilocycles and meters	

OPERATING FEATURES:

Fidelity Range	35-2500 cycles
Automatic Volume Control	

MODELS 4437,4438,4477
4478,4537,4577
Socket,Trimmers,Parts
Chassis

SEARS-ROEBUCK & CO.

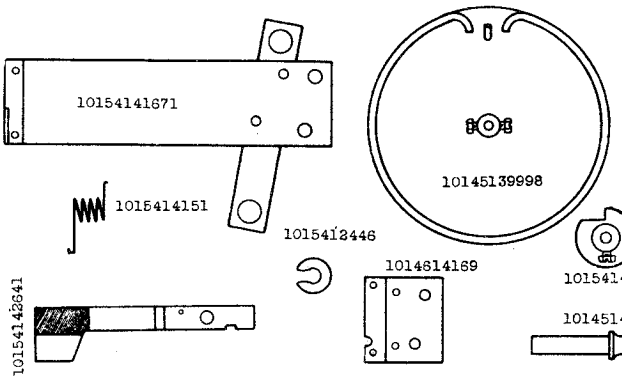

SCHEMATIC LOCATION	PART NUMBER	DESCRIPTION
	10154142641	Arm - "On-Off" indicator
	1015413407	Bushing - Rubber, chassis
	10154141671	Bracket - Dial mounting
	1014614169	Bracket - Dial drive shaft front bearing
	1015515577	Cable - Battery
	10154141501	Cam - "On-Off" indicator actuating
	1012715584	Cell - Bias
	1015412808	Clip - Grid
L1	1012815571	Coil - Antenna
L2	1012815572	Coil - Oscillator
	1011515609	Condenser - Variable
	10116158091	Condenser - Variable, with drive assembly
C9,C12	1012015576	Condenser - Electrolytic, dry
C1,C2	1011715573	Condenser - Trimmer, dual
C5	1011715723	Condenser - Trimmer, single
C6	1011714433	Condenser - Padding
C16,C18		Condenser - .5 mfd. 200 volts
C3,C8		Condenser - .1 mfd. 200 volts
C20		Condenser - .05 mfd. 200 volts
C11,C14,C17		Condenser - .003 " 400 volts
C7	1011914470	Condenser - .005 mfd. mica
C19		Condenser - .0005 mfd. mica
C15		Condenser - .00025 mfd. mica
C10,C13		Condenser - .0001 mfd.mica
C4,C21		Condenser - .00005 mfd. mica
R13	1012515567	Control - Tone
R5	1012415883	Control - Volume
	10145139740	Cord - Condenser drive
	1014015574	Dial - Station selector
	10145139998	Drum - Condenser drive
	1014414092	Escutcheon - With glass
	1015410980	Grommet - Variable condenser mounting
	1013914405	Knob - Tuning
	1013914095	Knob - Volume
	1013914858	Knob - Wave switch
	1013914425	Knob - Tone
	1015916085	Leaflet - Instruction
	1014314400	Nut - Escutcheon mounting
	10141140781	Pointer - Dial
R2		Resistor - 2 megohms, 1/3 watt
R6,R10,R11		Resistor - 500M ohms, 1/3 watt
R8,R12		Resistor - 250M ohms, 1/3 watt
R1,R14		Resistor - 50M ohms, 1/3 watt
R3		Resistor - 30M ohms, 1/3 watt
R4		Resistor - 20M ohms, 1/3 watt
R9		Resistor - 120 ohms, 1/3 watt
R7		Resistor - 10 ohms, 1/3 watt
	1014514171	Shaft - Dial drive
	1015315648	Shield - Tube
	1015315650	Shield - Tube, base
	1011888315	Socket - 4 prong, Speaker
	1011812757	Socket - 7 prong, Octal
	1011813173	Socket - 8 prong, Octal
	1015815759	Speaker - 6"
T3	1011315761	Transformer
	1015815796	Speaker - 8"
T3	1011315798	Transformer
	1014513948	Spring - Condenser drive cord tension
	1015414151	Spring - "On-Off" indicator tension
	1013715610	Switch - Wave
T1	10133155691	Transformer - IF Input
T2	1013515570	Transformer - IF Output
	1015412446	Washer - "U", shaft retaining

WHEN NO PART NUMBER IS ASSIGNED ORDER BY DESCRIPTION AND RATING

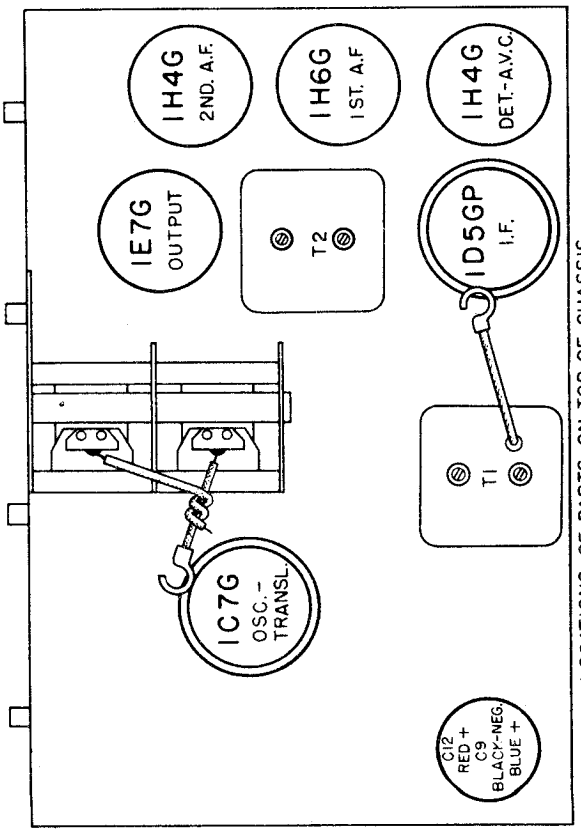

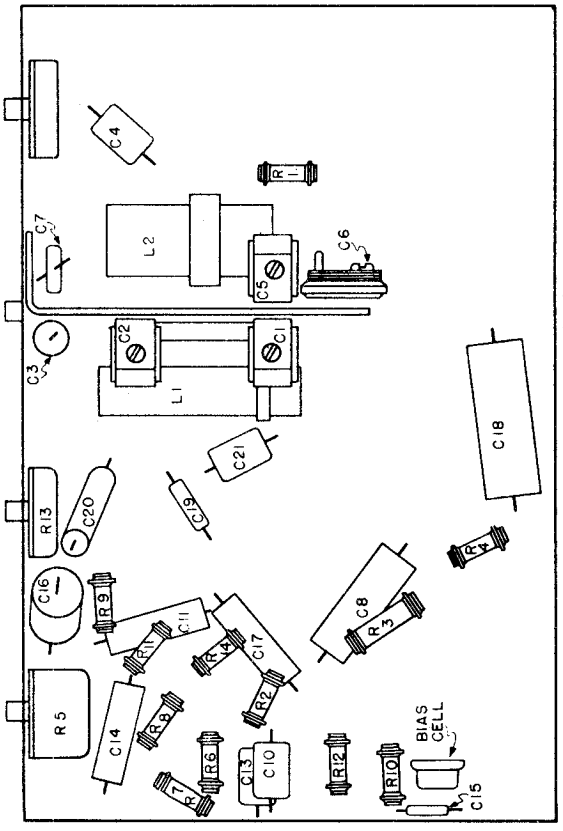

©John F. Rider, Publisher

©John F. Rider, Publisher

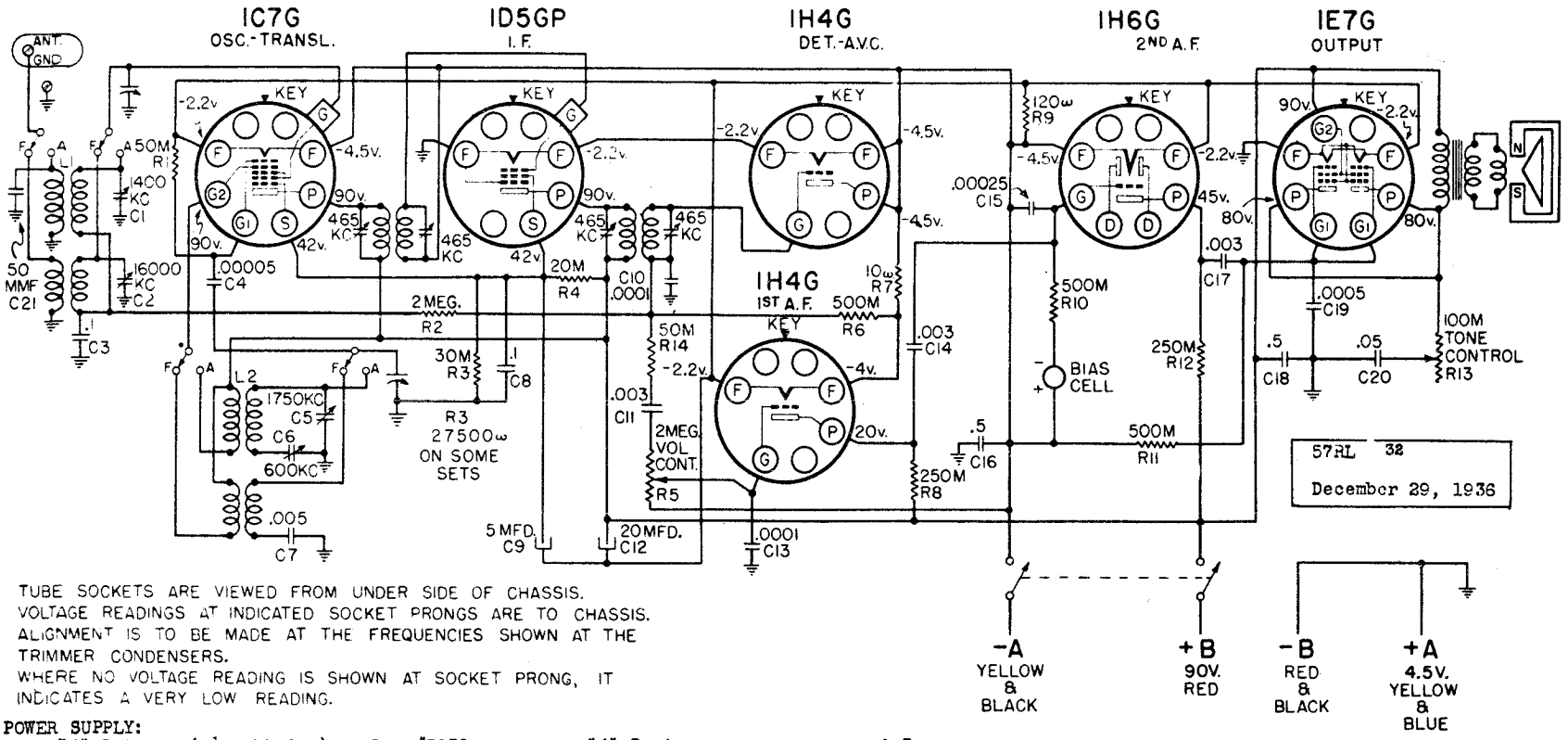

TUBE SOCKETS ARE VIEWED FROM UNDER SIDE OF CHASSIS.
VOLTAGE READINGS AT INDICATED SOCKET PRONGS ARE TO CHASSIS.
ALIGNMENT IS TO BE MADE AT THE FREQUENCIES SHOWN AT THE TRIMMER CONDENSERS.
WHERE NO VOLTAGE READING IS SHOWN AT SOCKET PRONG, IT INDICATES A VERY LOW READING.

POWER SUPPLY:

"A" Battery (4½ volt dry)	1 - #5032
"A" Battery (4 volt storage)	1 - #5049
"B" Batteries	2 - #5138P

"A" Drain	0.3 amperes
"B" Drain	22 ma

FREQUENCY RANGES:

Band "A"	540-1750 kc
Band "F"	6-18 mc

ALIGNMENT FREQUENCIES:

	Oscil. Trimmer	Ant.-Transl. Trimmer	Padder
Band "A"	1750 kc	1400 kc	600 kc
Band "F"	-	16 mc	Fixed

INTERMEDIATE FREQUENCY . . . . . 465 kc

POWER OUTPUT

Type	Twin Pentode
Undistorted	0.25 watts
Maximum	0.6 watts

OPERATING FEATURES:

Fidelity Range	50 - 5000 cycles
Tone Control	Variable
Automatic Volume Control	
"On-Off" Indicator	

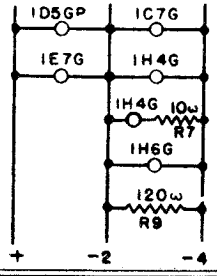

LOUD SPEAKER:

Type	PM Dynamic
Size	6" and 8"

CHASSIS FEATURES:

Number IF stages	One
Antenna	Marconi

THE FILAMENT CIRCUIT:

Since the tubes have two volt filaments and the "A" supply is 4 volts, a series parallel arrangement is used for the filament circuit. The 1C7G, 1H6G, and 1H4G tubes are connected as one parallel group. The 1D5GP and the 1E7G form another parallel group. These two groups are then connected in series. In addition, a 120 ohm resistor, R9, is in parallel with the group of four tubes so that the group of two tubes will have the proper current. If any one tube burns out, it will affect the filament voltage and current of all of the other tubes. A simplified diagram of the filament circuit is shown below.

MODELS 4437,4438,4477
4478,4537,4577 SEARS-ROEBUCK & CO.
Alignment,Notes,Sensitivity

ALIGNMENT PROCEDURE

PRELIMINARY:

Output meter connection . . . . . Across loud speaker voice coil

Output meter reading to indicate 50 milliwatts . . . . . 0.48 volts

Generator ground lead connection . . . . . Receiver chassis

Dummy antenna value to be in series with generator output . . . . . See chart below

Connection of generator output lead . . . . . See chart below

Generator modulation . . . . . 30%, 400 cycles

Approximate average sensitivity in microvolts for 50 milliwatts output . . . See chart below

Position of Volume Control . . . . . Fully clockwise

Position of Tone Control . . . . . Fully clockwise

Position of Dial Pointer . . . . . Along center line of dial with variable fully meshed.

WAVE BAND SWITCH POSITION	POSITION OF VARIABLE	GENERATOR FREQUENCY	DUMMY ANTENNA	GENERATOR CONNECTION	TRIMMERS ADJUSTED (IN ORDER SHOWN)	TRIMMER FUNCTION	APPROXIMATE MICROVOLTS
"A"	550 kc	465 kc	.1 mfd.	1C7G Grid	T2, T1	IF Output, IF Input	80
"A"	Fully Open	1750 kc	.0002 mfd.	Ant. Lead	C5	Oscillator	90
"A"	1400 kc	1400 kc	.0002 mfd.	Ant. Lead	C1	Translator	18
"A"	600 kc (rock)	600 kc	.0002 mfd.	Ant. Lead	C6	Padder	15
"F"	16 mc (rock)	16 mc	400 ohms	Ant. Lead	C2	Translator	10
"F"	7 mc	7 mc	400 ohms	Ant. Lead	-	-	70

IMPORTANT ALIGNMENT NOTES

Where indicated by the word, "Rock", the variable should be rocked back and forth a degree or two while making the adjustment.

The figures given in the "Microvolts" column are only approximate.

The alignment procedure should be repeated stage by stage, in the original order, for greatest accuracy. Always keep the output from the test oscillator at its lowest possible value to make the AVC action of the receiver ineffective.

After the alignment procedure has been completed, tune in a broadcast station at about 900 kc and, if necessary, shift the dial pointer to the station's frequency marking on the dial.

ELIMINATING WHISTLE AT 930 KC:

A whistle, due to a beat between the second harmonic (930 kc) of the 465 kc IF, and a 930 kc signal may be experienced. In localities where the 930 kc station is one that is frequently listened to, it will be desirable to shift the whistle to some other point where it will not be objectionable. This can be done by shifting the IF frequency of the receiver.

Determine at what point between 900 kc and 960 kc the whistle will be least objectionable. Dividing this frequency by two will give the new IF frequency to which the receiver should be aligned. For example, if it is determined that a whistle at 915 kc would not be objectionable, the IF should be realigned at 915/2 or 457.5 kc.

Align the IF at the new frequency and then realign the rest of the receiver as described under, "ALIGNMENT PROCEDURE".

WAVE-TRAP TO ELIMINATE INTERFERENCE FROM SHIP OR AIRPORT TRANSMITTERS:

In locations near ship transmitters or airports or air beacon stations, code interference may be experienced. Part #1013114256 wave-trap is designed to eliminate such interference.

Mount the trap, by means of two wood screws, at any convenient place on the chassis shelf or cabinet where it will be near the antenna terminal of the receiver. Connect the yellow lead of the wave-trap to the antenna downlead. Splice the green lead of the wave-trap to the green antenna lead of the receiver. Cut off any excess length of wire from the trap and from the chassis antenna lead so that the green lead from the wave-trap to the chassis is as short as possible. The yellow lead from the wave-trap should be run so that it is as far as possible from the green lead. Splice one of the black leads from the wave-trap to the black ground lead of the receiver. Connect the other wave-trap black lead to the ground used for the installation.

The trap is pre-tuned to the IF frequency so that normally no further adjustment is necessary. However, should interference still be experienced, tune the receiver between approximately 550 and 600 kc. Then adjust the wave-trap, by means of the trimmer screw at the bottom of the container, until the interference is eliminated. Addition of the trap will reduce the sensitivity of the receiver around 600 kc by approximately 50%. The customer should be forewarned of this to avoid complaints of reduced sensitivity.

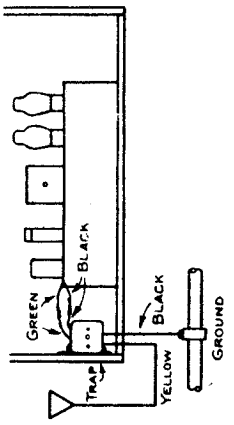

BATTERY REPLACEMENT:

The dry "A" battery should be replaced when its voltage drops to 3.4 volts, under load. Approximately 600 hours of service can be expected before the battery voltage drops to this value. The "B" batteries should be replaced when the voltage of the 90 block has dropped to 68 volts, under load. Approximately 300 hours of service can be expected before this point is reached. For longer uninterrupted service heavy duty "B" batteries should be recommended.

These models may be used with either a 4½ volt dry "A" battery or a 4 volt storage "A" battery, without requiring any changes in connections.

©John F. Rider, Publisher

SEARS ROEBUCK & CO.

MODELS 4465,4485,4565
4585. Chassis 100.151
Schematic,Socket,Voltage,
Speaker Conn.,Specs.

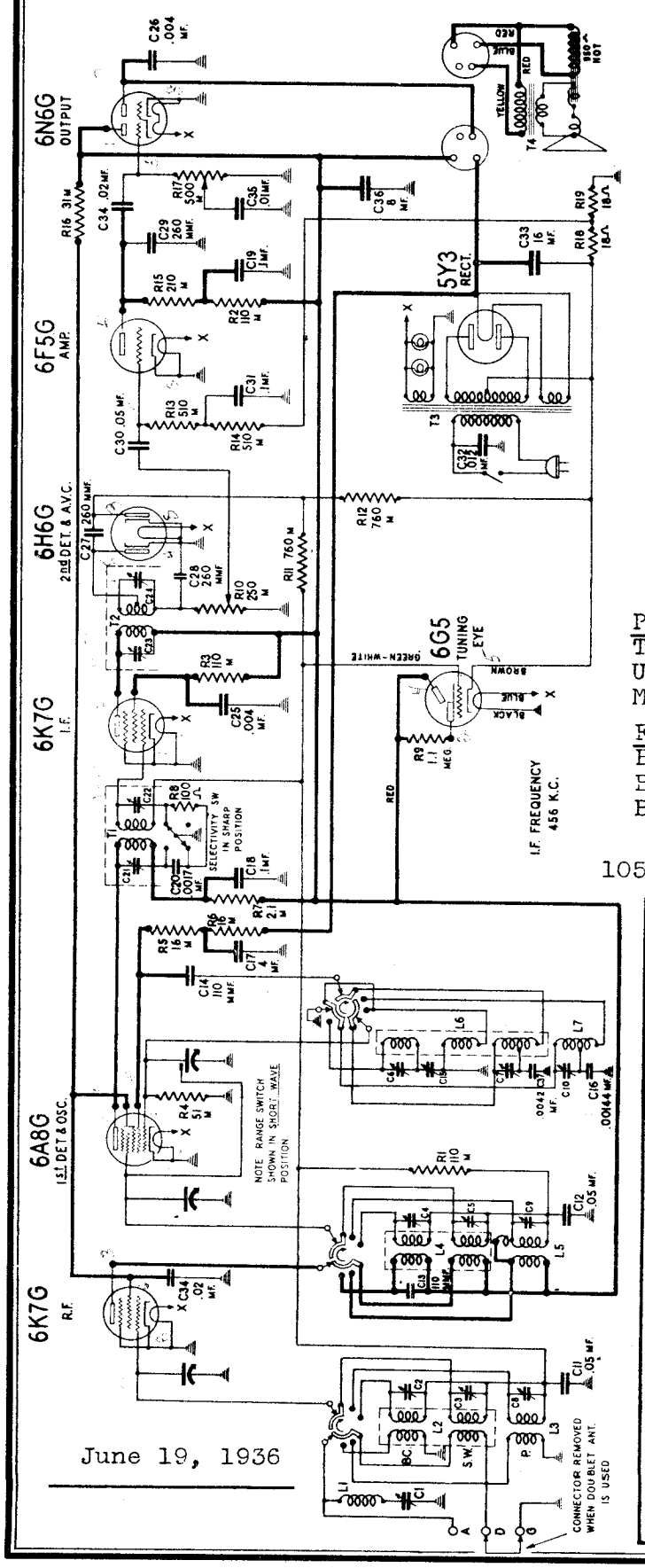

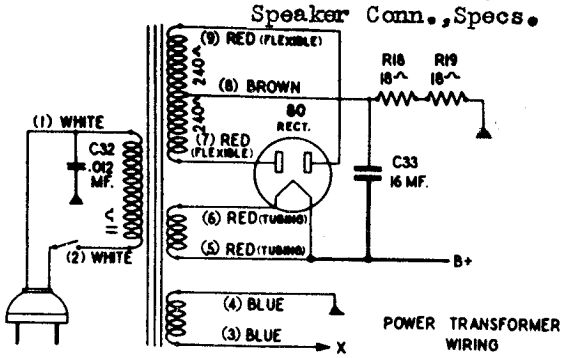

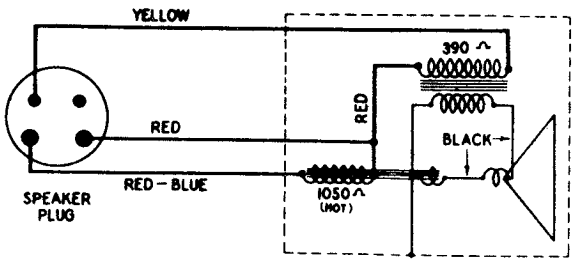

SPEAKER WIRING

POWER OUTPUT

Type	Class A
Undistorted	3.0 Watts
Maximum	3.5 Watts

FREQUENCY RANGES

Band A	526 to 1750 KC.
Band P	1730 to 5600 KC.
Band F	5500 to 18,000 KC.

POWER SUPPLY

105-135 volts, 50-60 cycle, 70 watts

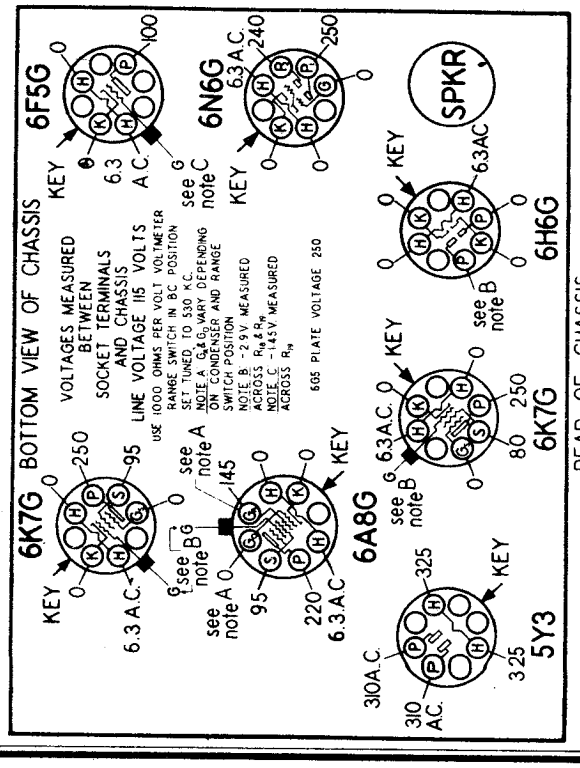

June 19, 1936

©John F. Rider, Publisher

ALIGNMENT PROCEDURE

PRELIMINARY

Output meter connections.....Across voice coil leads
Output meter reading to indicate 1 watt output.....1.44 volts
Average sensitivity in microvolts for 1 watt output.....See chart below

Generator ground connection.....Receiver Chassis
Dummy antenna to be in series with generator output.....See chart below
Connection of generator output lead.....See chart below
Generator modulation.....30%, 400 cycles

Position of selectivity control.....Sharp position (clockwise)
Position of volume control.....Maximum clockwise
Position of tone control.....Maximum clockwise

BAND SWITCH	POSITION OF * DIAL POINTER	GENERATOR FREQUENCY	DUMMY ANTENNA	GENERATOR CONNECTION	TRIMMERS ADJUSTED (In order shown)	MICRO-VOLTS (Sharp Pos.)
Band A I.F.	1000 KC.	456 KC.	.1 Mfd.	6A8-G Grid	C21, C22, C23, C24	150
I.F. Trap	600 KC.	456 KC.	.00025 Mfd.	Ant. Lead	C1 for Min.Output	
	1500 KC.	1500 KC.	.00025 Mfd.	Ant. Lead	C6,C4,C2	15
	600 KC. ** (Rock Dial)	600 KC.	.00025 Mfd.	Ant. Lead	C15	15
Band P	5000 KC.	5000 KC.	400 Ohm.	Ant. Lead	*** C10,C9,C8	30
Band F	16000 KC.	16000 KC.	400 Ohm.	Ant. Lead	*** C7,C5,C3	30

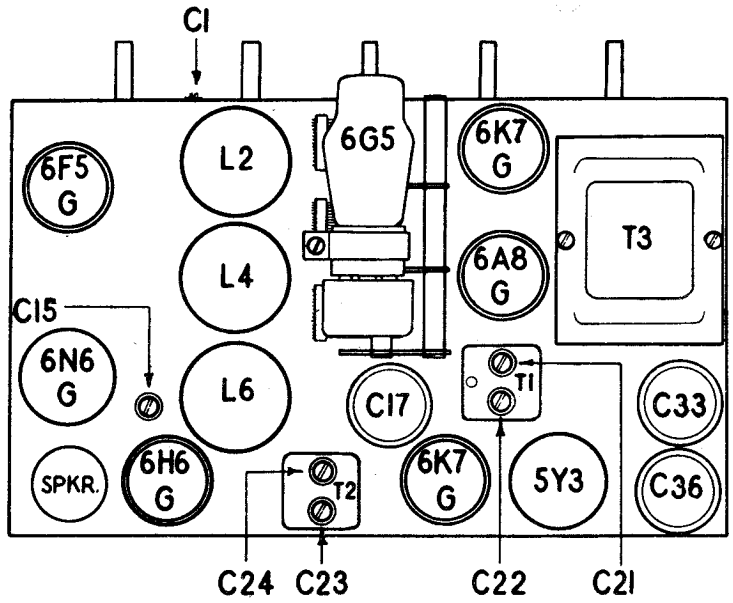

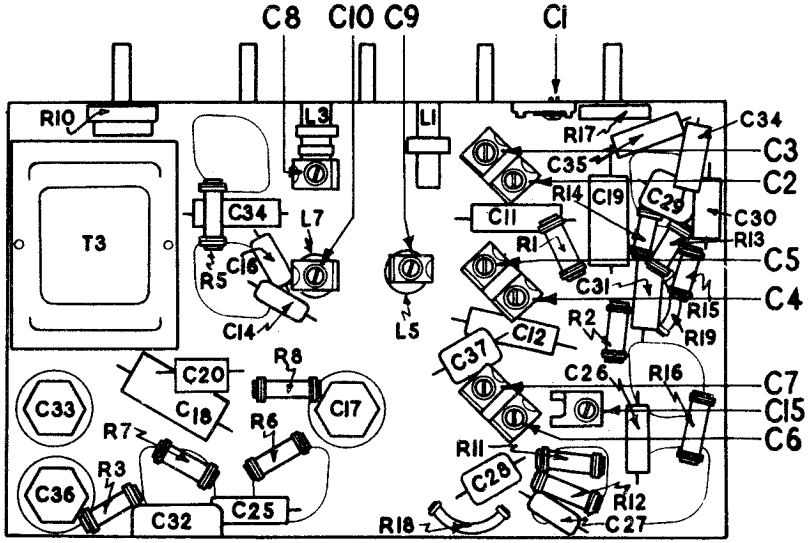

IMPORTANT ALIGNMENT NOTES

* Before attempting to align the receiver check to see that the dial pointer coincides with the horizontal dividing line of the scale when the gang condenser is in full mesh.

After adjusting the I.F. trimmers C21, C22, C23 and C24, go back and repeat the adjustment, since the setting of each trimmer will have some effect on others. When adjusting C1, antenna trap trimmer, increase generator output to obtain clearly defined trimmer setting for a minimum.

** When aligning the broadcast band at 600 KC. it is necessary to adjust trimmer C15 while slowly rocking the gang condenser through a small distance. Rocking the gang is essential if maximum sensitivity is to be obtained.

*** When aligning the short wave bands, care should be taken in adjusting trimmers C7 and C10, since two possible adjustments of these trimmers will result in signal peaks. The proper peak is that which occurs with the trimmer screw farthest out.

©John F. Rider, Publisher

SEARS-ROEBUCK & CO.

MODELS 4466,4467,4469
4567
Schematic,Specs.

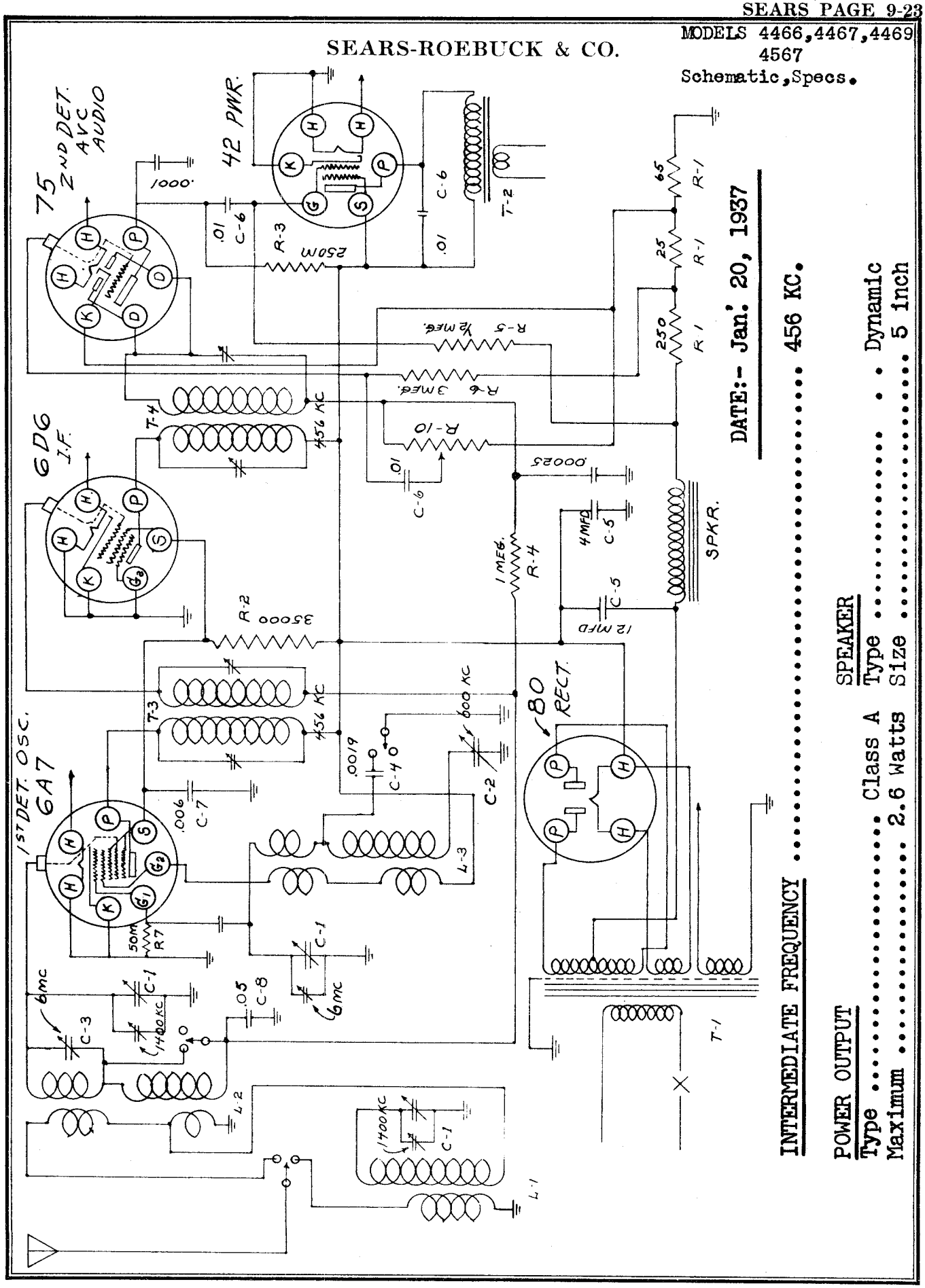

DATE:- Jan. 20, 1937

INTERMEDIATE FREQUENCY ..... 456 KC.

POWER OUTPUT
Type ..... Class A
Maximum ..... 2.6 Watts

SPEAKER
Type ..... Dynamic
Size ..... 5 inch

©John F. Rider, Publisher

ALIGNMENT PROCEDURE

PRELIMINARY

Output meter connections ..... Across voice coil leads
Output meter to indicate 500 MW. ..... below
Average sensitivity in microvolts for 500 MW. output .....See chart below

Generator ground connection ..... Receiver Chassis
Dummy ant. in series with generator output ..... See chart below
Connection of generator output lead ..... See chart below
Generator modulation ..... 30%; 400 cycles

Position of volume control ..... Maximum

BAND SWITCH	POSITION OF DIAL	GENERATOR FREQUENCY	DUMMY ANTENNA	GENERATOR CONNECTION	TRIMMERS ADJUSTED IN ORDER SHOWN	MV
BAND A	540 KC	456 KC	.1 MFD	6 A 7 GRID	I. F. TRIMMERS	
BAND PF	6 MC	6 MC	400 ohm	Ant. LEAD	Trimmer on Var.Osc.Sec.	
BAND PF	6 MC	6 MC	400 ohm	Ant. LEAD	Trimmer C3	38
BAND A	600 KC ROCKGANG	600 KC	.00025	Ant. LEAD	C2	24
BAND A	1400 KC	1500 KC	.00025	Ant. LEAD	(1) on Var. Rear Sec. (2) on Var. Front Sec.	19

Align Short Wave Before Broadcast band as indicated in chart.

IMPORTANT ALIGNMENT NOTES

Before attempting to align the receiver, check to see that the dial pointer coincides with the horizontal dividing line of the scale when the gang condenser is in full mesh.

After adjusting the I.F. trimmers, go back and repeat the adjustment, since the setting of each trimmer will have some effect on the others.

When aligning the broadcast band at 600 KC. it is necessary to adjust trimmer C 2 while slowly rocking the gang condenser through a small distance. Rocking the gang is essential if max. sensitivity is to be obtained.

It would be advisable that after the set is aligned to go over the balancing procedure for a second time as it may be possible to derive additional sensitivity and selectivity by doubly checking the alignment.

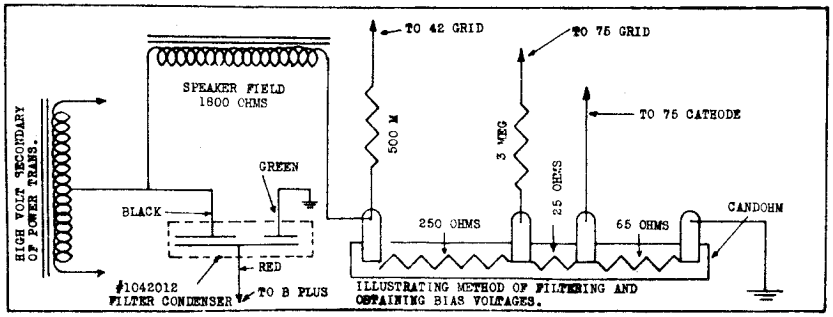

ILLUSTRATING METHOD OF FILTERING AND OBTAINING BIAS VOLTAGES.

STEP BY STEP ALIGNMENT PROCEDURE

(1) - Peak I.F. transformers carefully at 456 Kc.
(2) - Set band switch to short wave position.
(3) - Set dial pointer at 6 Mc.
(4) - Adjust trimmer on center section of variable condenser to bring in proper peak of 6 Mc signal.
(5) - Adjust trimmer on coil L2.
(6) - Change band switch position to broadcast.
(7) - Turn dial pointer to approximately 600 Kc.
(8) - While 600 Kc signal is being fed into antenna lead, adjust padder C-2 for maximum gain, while variable gang is being rocked.
(9) - Set variable to 1400 Kc and adjust two trimmers on variable, the front and rear sections.
(10) - If variable center section (o s c) has been set correctly, 1720 Kc will automatically fall broadcast scale. A very slight adjustment of the center trimmer on the gang will correct this if no police calls are heard.

VOLTAGE CHART
ALL VOLTAGES MEASURED FROM CHASSIS TO SOCKET TERMINALS. USE 1000 OHM PER VOLT VOLT METERS.

TUBE	PLATE	SCREEN	SUPPRESSOR	OSC. PLATE	OSC. GRID	CATHODE	CONTROL GRID
6A7	195	80	-	195	-8.	0	-.4
6D6	190	80	0	-	-	0	-.4
75	80	DIODES -2.1	-2.1	-	-	-2.8	-2.4
42	180	195	-	-	-	0.	-.6
80	FILAMENT 195	195	-	-	-	-	-

©John F. Rider, Publisher

SEARS-ROEBUCK & CO.

MODELS 4466,4467,4469
4567
Socket,Trimmers,Chassis

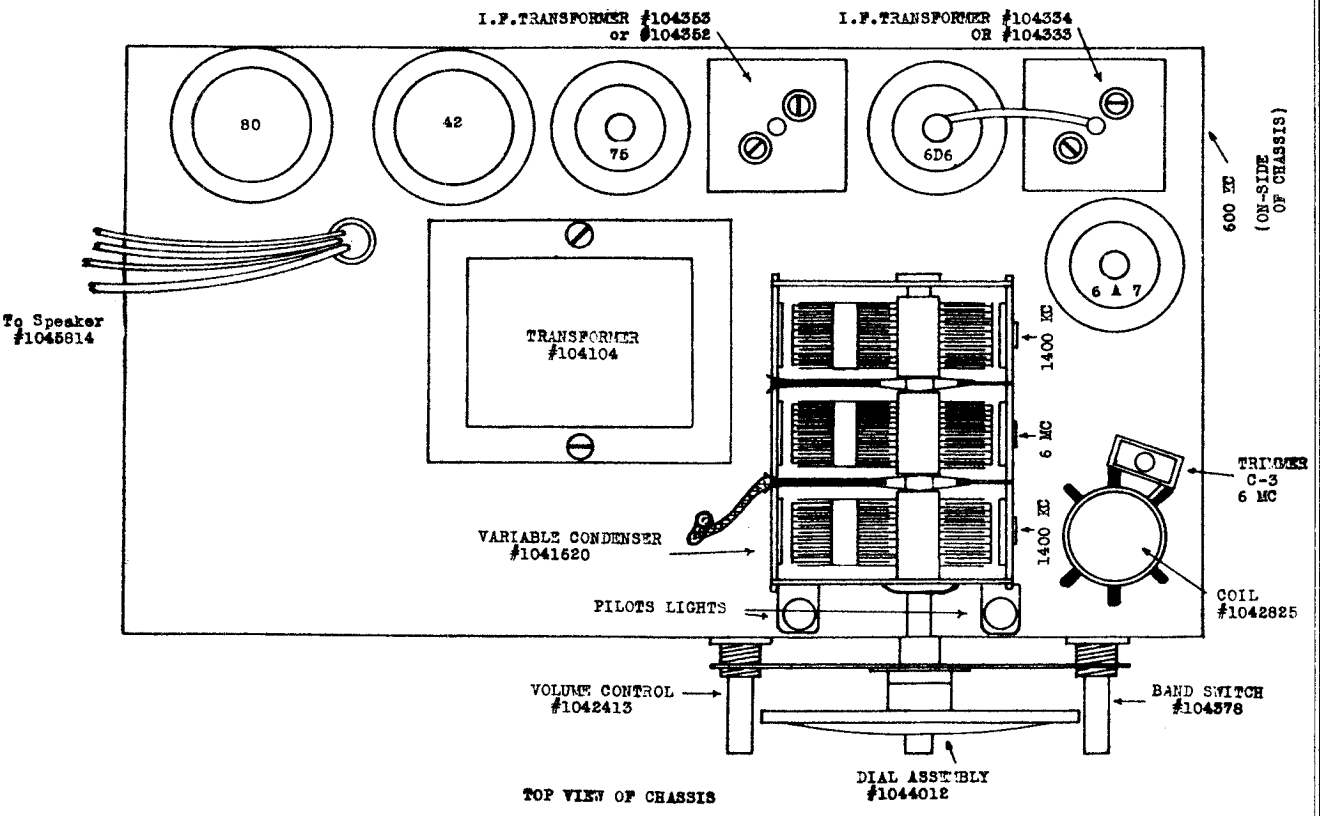

TOP VIEW OF CHASSIS

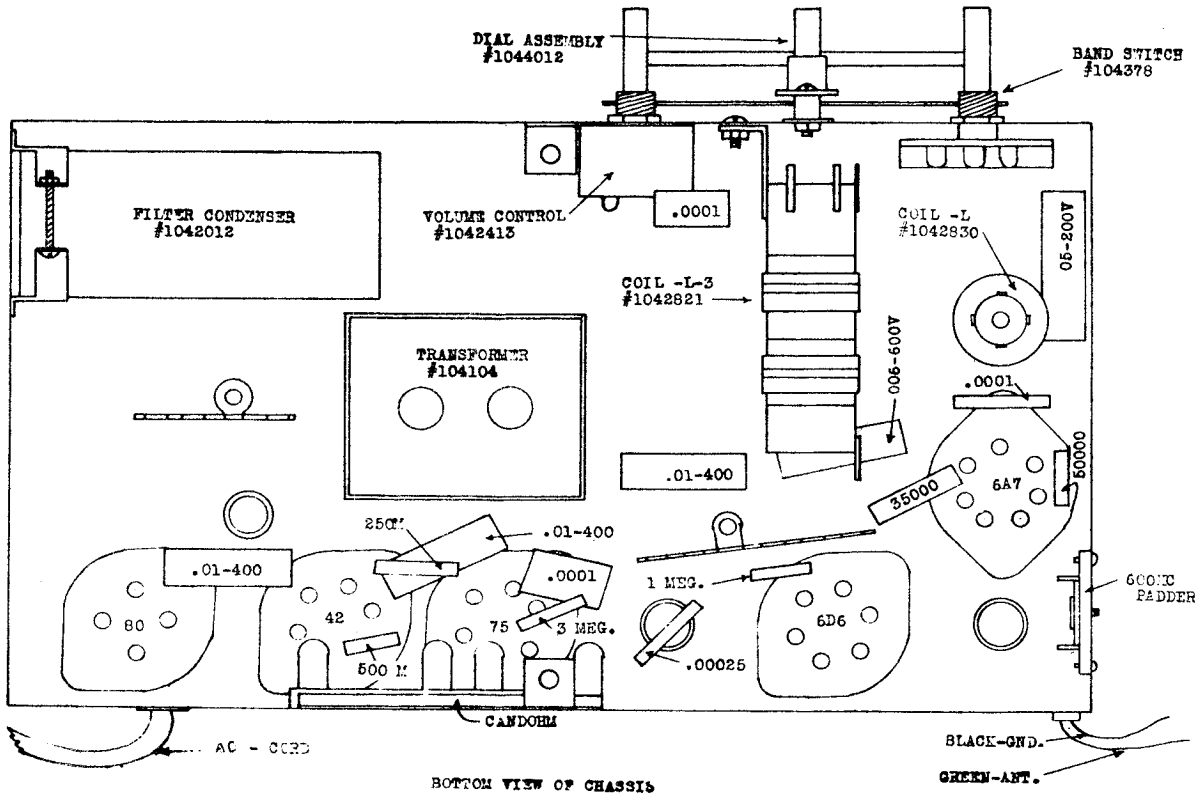

BOTTOM VIEW OF CHASSIS

©John F. Rider, Publisher

MODELS 4502,4504,4508
Socket,Trimmers,Chassis
Alignment,Parts

SEARS-ROEBUCK & CO.

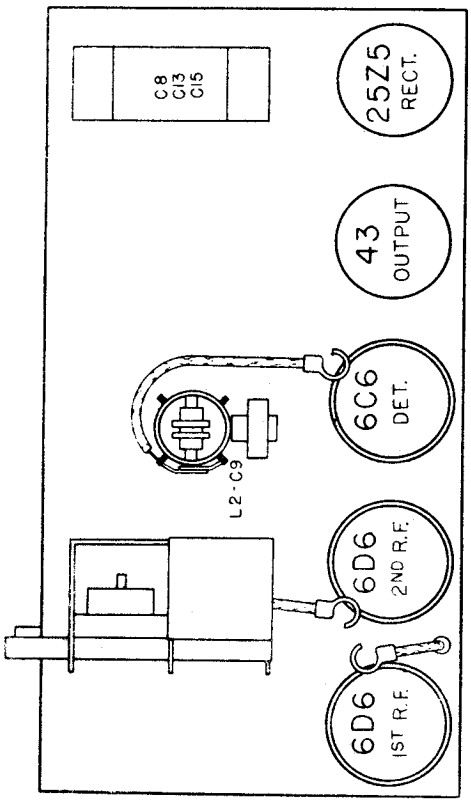

LOCATIONS OF PARTS ON TOP OF CHASSIS

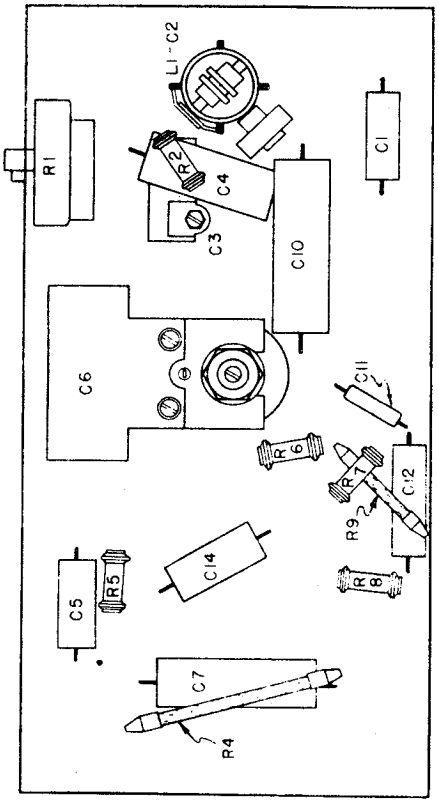

LOCATIONS OF PARTS UNDER CHASSIS

WHEN NO PART NUMBER IS ASSIGNED ORDER BY DESCRIPTION AND RATING

SCHEMATIC LOCATION	PART NUMBER	DESCRIPTION
	1015514747	Antenna Cord - White
	1015514030	Antenna Cord - Black
	1015514723	Antenna Cord - Brown
	1015414200	Button - Snap, variable condenser shield mounting
	10160143181	Cabinet - Ivory (With grille cloths)
	10160140281	Cabinet - Black (With grille cloths)
	10160145341	Cabinet - Brown (With grille cloths)
	1015414478	Clip - Grid
	10160145351	Cloth - Grille, front, ivory with paper baffle
	10160147401	Cloth - Grille, front, gold, with paper baffle
	1016014536	Cloth - Grille, rear, ivory
	1016014741	Cloth - Grille, rear, gold
L1-C2, L2-C9	1012814032	Coil - RF
	1011614035	Condenser - Variable
C8,C13, C15	1012014036	Condenser - Electrolytic, triple, dry
C6	1012014415	Condenser - Electrolytic, 8 mfd. 100 V.
C10		Condenser - .25 mfd. 200 V.
C4		Condenser - .1 mfd. 200 V.
C7		Condenser - .05 mfd. 600 V.
C5,C14		Condenser - .01 mfd. 400 V.
C12		Condenser - .004 " 400 V.
C1		Condenser - .001 " 400 V.
C11		Condenser - .00025" mica
R1	1012414034	Control - Volume, with "On-Off" switch
R3	1015514416	Cord - Line, black
R3	1015514738	Cord - Line, white
R3	1015514722	Cord - Line, brown
	1016014476	Cover - Cabinet bottom
	1015414052	Grommet - Chassis mtg.
	1013914735	Knob - Tuning, ivory, black lettered calibration
	1013914736	Knob - Tuning, ivory, gold lettered calibration
	1013914538	Knob - Tuning, ivory, brown lettered calibration
	1013914322	Knob - Volume control, ivory
	1013914039	Knob - Volume Control, black
	101391 537	Knob - Volume Control, brown
R7		Resistor - 1 megohm, 1/3 watt

FOR OTHER DATA SEE INDEX

ALIGNMENT PROCEDURE

The receiver need not be taken out of the cabinet for alignment.

Either a broadcast signal of about 1400 kc or a test oscillator signal may be used. If a broadcast signal is used, the antenna of the receiver should be extended as in a normal installation. If a test oscillator signal is used, a wire should be connected to the test oscillator output and run parallel to but insulated from the receiver's antenna wire. The generator ground connection should be connected to ground.

Tune in the 1400 kc signal and adjust the trimmer for maximum loud speaker response. This can be done most accurately if the Volume Control setting is reduced to give a low volume level. The variable should be rocked a degree or two during the adjustment. The location of this trimmer is shown in the Location of Parts Diagram. It is accessible, when the chassis is in the cabinet, through the hole in the plate at the bottom of the cabinet. An insulated screw-driver should be used since the chassis may be above ground potential, as explained previously.

SCHEMATIC LOCATION	PART NUMBER	DESCRIPTION
R8		Resistor - 400M ohms, 1/3 watt
R6		Resistor - 40M ohms, 1/3 watt
R9		Resistor - 450 ohms, 1 watt, flexible
R2		Resistor - 350 ohms, 1/3 watt
R5		Resistor - 300 ohms, 1/3 watt
R4		Resistor - 50 ohms, 2 watts, flexible
	1015314244	Shield - Tube
	101188092	Socket - 6 prong
	1015814058	Speaker - 5", Dynamic
	1015714871	Cone and voice coil
	1011514872	Field coil
T1	1011314873	Transformer
	10138144191	Switch - AC, DC

CHASSIS FEATURES:
Number of tuned RF stages - - - - Two
Number of condensers in gang - - - Two
Antenna - - - - - - - Self-contained
Dial - KC calibration on large tuning knob.

OPERATING CONTROLS:
Large Upper Knob - - - - - - - - Tuning
Small Lower Knob - - "On-Off" switch and Volume.

CONTROL OPERATION:
Direct drive
Turning right; Power on; volume increase

©John F. Rider, Publisher

SEARS-ROEBUCK & CO.

MODELS 4472,4473,4533
Schematic,Voltage,Specs.
Socket,Trimmers,Chassis

POWER SUPPLY:
"A" Battery (4½ volt dry) 1 - #5031P
"A" Battery (4 volt storage) 1 - #5049
"B" Batteries . . . . . 2 - #5140P

"A" Drain . . . . . 0.18 amperes
"B" Drain . . . . . 12 ma

FREQUENCY RANGE:
Broadcast . . . . . 540-1750 kc

ALIGNMENT FREQUENCIES:

Oscillator Trimmer	Translator Trimmer	Padder
1750 kc	1400 kc	600 kc

INTERMEDIATE FREQUENCY . . . . . 465 kc

POWER OUTPUT:
Type . . . . . Single Pentode
Undistorted . . . . . 0.14 watts
Maximum . . . . . 0.24 watts

LOUD SPEAKER:
Type . . . . . Magnetic
Size . . . . . 6 inch
DC resistance . . . . App. 1000 ohms

OPERATING FEATURES:
Fidelity Range . . . 35 - 2500 cycles
Automatic Volume Control

57RL 33
January 11, 1937

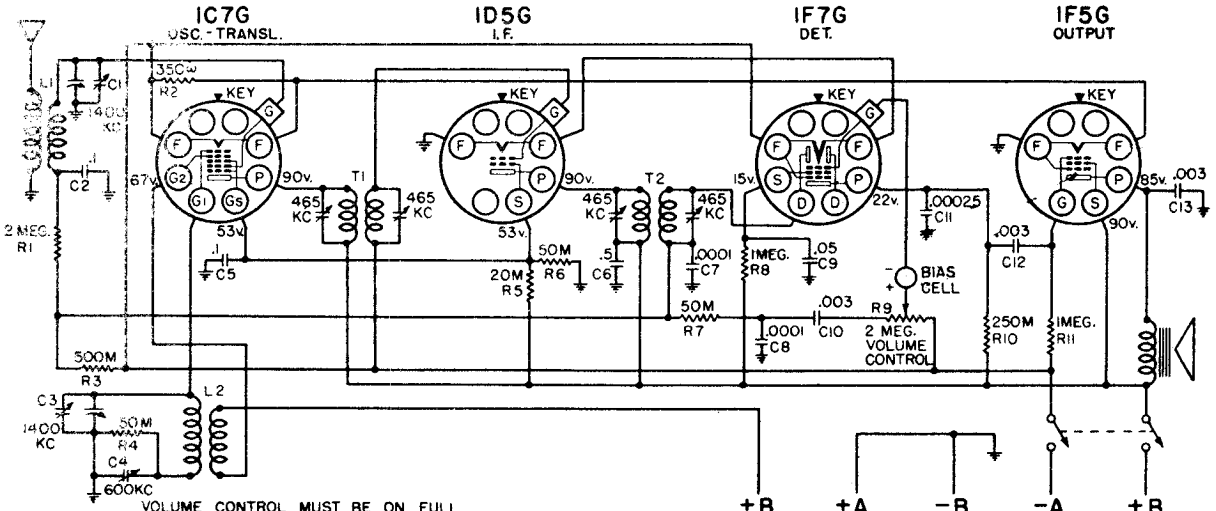

VOLUME CONTROL MUST BE ON FULL.
TUBE SOCKETS ARE VIEWED FROM UNDER SIDE OF CHASSIS.
VOLTAGE READINGS AT INDICATED SOCKET PRONGS ARE TO CHASSIS.
ALIGNMENT IS TO BE MADE AT THE FREQUENCIES SHOWN AT THE TRIMMER CONDENSERS.
WHERE NO VOLTAGE READING IS SHOWN AT SOCKET PRONG, IT INDICATES A VERY LOW READING.

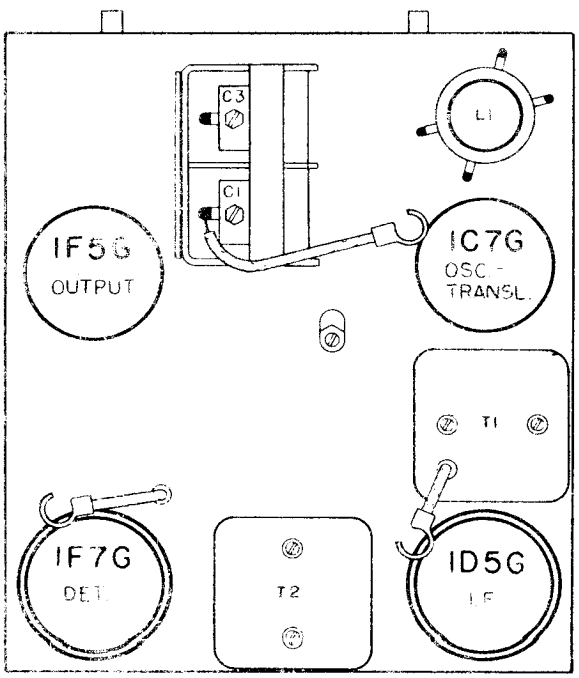

LOCATIONS OF PARTS ON TOP OF CHASSIS.

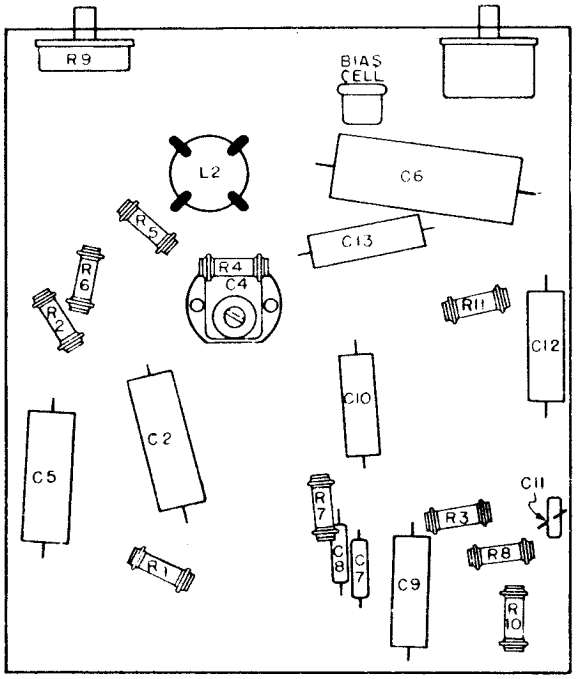

LOCATIONS OF PARTS UNDER CHASSIS

©John F. Rider, Publisher

©John F. Rider, Publisher

THE BIAS CELL:

The bias cell is filled with thick liquid. When the receiver is in its normal position the bias cell will be mounted on its side, which is the correct position, so that the liquid will come into contact with the carbon block and the inside of the metal container. However, the receiver may be stood on its end when working on it on the service bench. In this position the bias cell may be upright and the liquid may not touch the carbon block. If this happens, it will cause severe distortion. Accordingly, the necessary precaution should be observed when working on the receiver on the service bench.

ELIMINATING WHISTLE AT 930 KC:

A whistle, due to a beat between the second harmonic (930 kc) of the 465 kc IF, and a 930 kc signal may be experienced. In localities where the 930 kc station is one that is frequently listened to, it will be desirable to shift the whistle to some other point where it will not be objectionable. This can be done by shifting the IF frequency of the receiver.

Determine at what point between 900 kc and 960 kc the whistle will be least objectionable. Dividing this frequency by two will give the new IF frequency to which the receiver should be aligned. For example, if it is determined that a whistle at 915 kc would not be objectionable, the IF should be realigned at 915/2 or 457.5 kc.

Align the IF at the new frequency and then realign the rest of the receiver as described under, "ALIGNMENT PROCEDURE".

THE AVC CIRCUIT:

The diode current of the 1F7G tube, flowing through the 500M ohm resistor, R3, creates a voltage drop across it. This voltage is applied to the control grid of the 1C7G tube to provide AVC.

BATTERY REPLACEMENT:

The dry "A" battery should be replaced when its voltage drops to 3.4 volts, under load. The "B" batteries should be replaced when the total voltage has dropped to 68 volts, under load.

WAVE-TRAP TO ELIMINATE INTERFERENCE FROM SHIP OR AIRPORT TRANSMITTERS:

In locations near ship transmitters or airports or air beacon stations, code interference may be experienced. Part #1013114256 wave-trap is designed to eliminate such interference.

Mount the trap, by means of two wood screws, at any convenient place on the chassis shelf or cabinet where it will be near the antenna terminal of the receiver. Connect the yellow lead of the wave-trap to the antenna downlead. Splice the green lead of the wave-trap to the green antenna lead of the receiver. Cut off any excess length of wire from the trap and from the chassis antenna lead so that the green lead from the wave-trap to the chassis is as short as possible. The yellow lead from the wave-trap should be run so that it is as far as possible from the green lead. Splice one of the black leads from the wave-trap to the black ground lead of the receiver. Connect the other wave-trap black lead to the ground used for the installation.

The trap is pre-tuned to the IF frequency so that normally no further adjustment is necessary. However, should interference still be experienced, tune the receiver between approximately 550 and 600 kc. Then adjust the wave-trap, by means of the trimmer screw at the bottom of the container, until the interference is eliminated. Addition of the trap will reduce the sensitivity of the receiver around 600 kc by approximately 50%. The customer should be forewarned of this to avoid complaints of reduced sensitivity.

SCHEMATIC LOCATION	PART NUMBER	DESCRIPTION
	1015415563	Board - Bias cell mounting
	1015413407	Bushing - Rubber, chassis mounting
	1015515623	Cable - Battery
	1012715564	Cell - Bias
	1015412808	Clip - Grid
L1	1012814084	Coil - Antenna
L2	1012814085	Coil - Oscillator
	1011615764	Condenser - Variable
C4	1011714433	Condenser - Padding
C6		Condenser - .5 mfd. 200 V.
C2,C5		Condenser - .1 mfd. 200 V.
C9		Condenser - .05 " 200 V.
C10,C12, C13		Condenser - .003 " 400 V.
C11		Condenser - .00025 mfd. mica
C7,C8		Condenser - .0001 mfd. mica
R9	1012415763	Control - Volume
	1014015765	Dial - Station selector
	1013914405	Knob - Station selector
	1013914220	Knob - Volume control
	1013914221	Knob - "On-Off" switch
	1015915758	Leaflet - Instruction
	10141159071	Pointer - Dial
R1		Resistor - 2 megohms, 1/3 watt
R8,R11		Resistor - 1 megohm, 1/3 watt
R3		Resistor - 500M ohms, 1/3 watt
R10		Resistor - 250M ohms 1/3 watt
R4,R6,R7		Resistor - 50M ohms, 1/3 watt
R5		Resistor - 20M ohms, 1/3 watt
R2		Resistor - 350 ohms, 1/3 watt
	1011812757	Socket - 7 prong, Octal
	1011813173	Socket - 8 prong, Octal
	1015814136	Speaker
	1015715089	Cone
	1011515090	Actuating coil
	1013815889	Switch - Filament
T1	10133155441	Transformer - IF Input
T2	1013515546	Transformer - IF Output

WHEN NO PART NUMBER IS ASSIGNED ORDER BY DESCRIPTION AND RATING

ALIGNMENT PROCEDURE

PRELIMINARY:

Output meter connections . . . . . 4000 ohm meter, in series with a .5 mfd. condenser, across speaker terminals.

Output meter reading to indicate 50 milliwatts . . . . . 8.5 volts

Average sensitivity in microvolts for 50 milliwatts output . . . . . See chart below

Generator ground lead connection . . . . . Receiver chassis

Dummy antenna value to be in series with generator output . . . . . See chart below

Connection of generator output lead . . . . . See chart below

Generator modulation . . . . . 30%, 400 cycles

Position of Volume Control . . . . . Fully on

POSITION OF VARIABLE	GENERATOR FREQUENCY	DUMMY ANTENNA	GENERATOR CONNECTION	TRIMMER ADJUSTMENTS (IN ORDER SHOWN)	TRIMMER FUNCTION	APPROXIMATE MICROVOLTS
Closed	465 kc	.1 mfd.	1C7G Transl. Grid	T2,T1	IF	150
Fully Open	1750 kc	.0002 mfd.	Antenna Lead	C3	Osc. Trim.	150
1400 kc	1400 kc	.0002 mfd.	Antenna Lead	C1	Translator Trimmer	90
600 kc (rock)	600 kc	.0002 mfd.	Antenna Lead	C4	Osc. Pad.	45

IMPORTANT ALIGNMENT NOTES

The variable should be rocked back and forth a degree or two while making the 600 kc adjustment.

The alignment procedure should be repeated in the original order, step by step, to insure greater accuracy.

Always keep the output power from the generator at its lowest possible value to prevent the AVC of the receiver from interfering with accurate alignment.

After the alignment has been completed, check the calibration by tuning in a broadcast station at about 900 kc. Adjust the dial pointer to the station's frequency, if necessary.

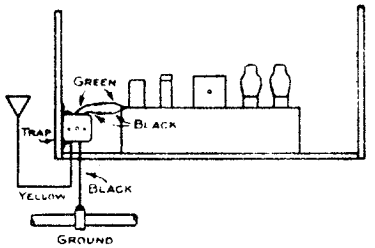

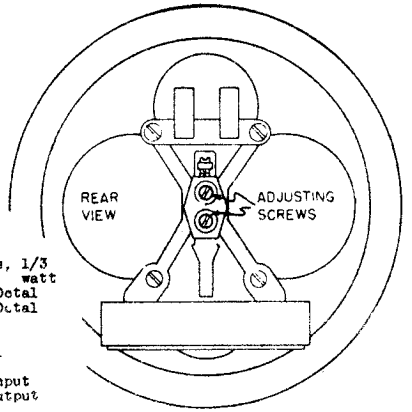

SEARS-ROEBUCK & CO.

MODEL 4487
Schematic, Changes
MODEL 4587
Changes

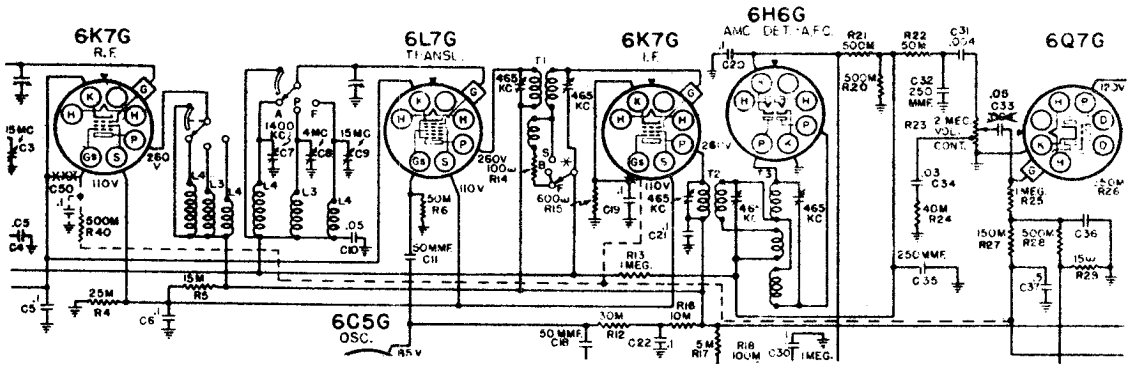

FIG. 3 - Schematic otherwise the same as Model 4587

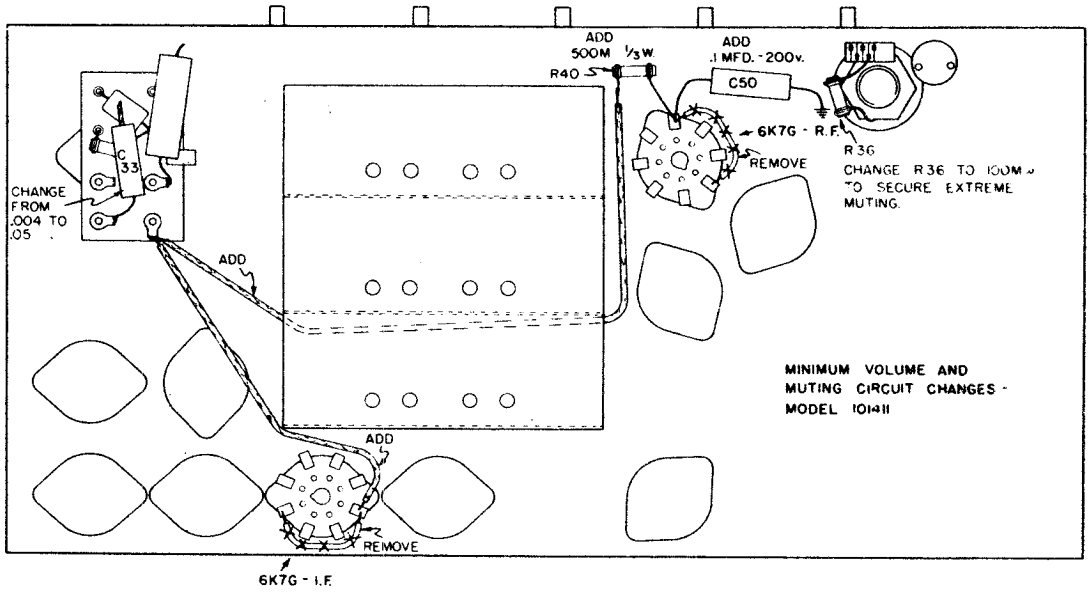

FIG. 3A

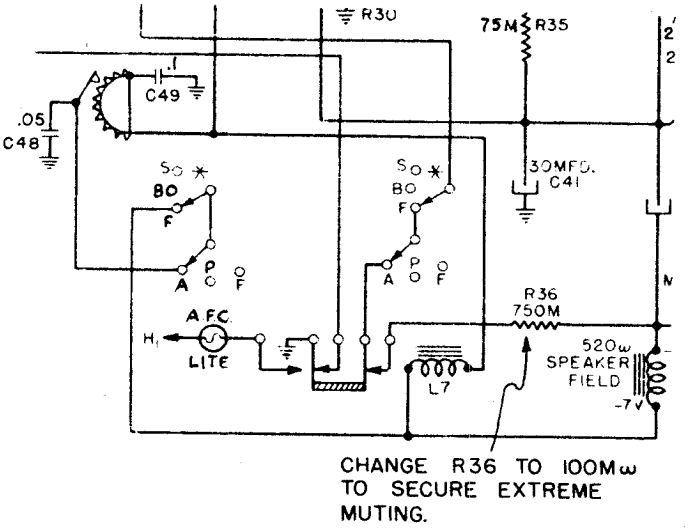

FIG. 1

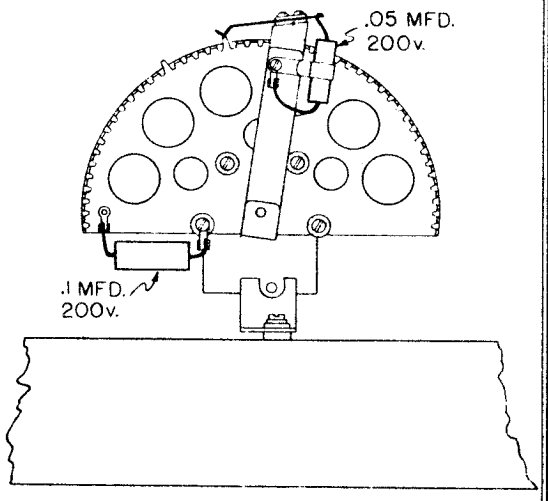

FIG. 2

©John F. Rider, Publisher

CHASSIS DESIGNATION IF THE CHANGES MENTIONED IN THIS SUPPLEMENT HAVE ALREADY BEEN MADE:

Chassis in which all the changes mentioned in this Supplement have been made at the factory will be indicated by the letter, "F", or a subsequent letter rubber stamped on the Chassis Identification Sticker at the rear of the chassis. Accordingly, do not attempt to make any of these changes on chassis marked with the letter, "F", or subsequent letter.

CORRECTING RELAY TROUBLE:

Relay trouble usually is indicated by one or more of the following symptoms:

1. Flash Tuning light stays on at all times.
2. Receiver does not operate in "Flash" position.
3. Flash Tuning light does not light (although this may be due to a burnt out bulb).
4. Radio remains muted even though not in Flash position.

To Correct Relay Trouble	(1 - type #3 relay (1 - .05 mfd. 200 volt condenser (1 - .1 mfd. 200 volt condenser
To Correct Faulty A.F.C. Muting	(1 - 500M ohm, 1/3 watt resistor (1 - .1 mfd. 200 volt condenser
To Correct Too High Minimum Volume	1 - .05 mfd. 200 volt condenser

The Service Instructions, (MODEL 4587) 57RL 22, for this Model describe two types of relay and mention that the second type should be used to correct these difficulties. The method of identifying these two types of relay by the color of their coil leads, as described in the manual, has been discontinued. A third type of relay, part #1013815562, has been developed and will be the one supplied for replacement purposes even though the original one was type #1 or type #2. The tabulation below shows how the three types of relay can be identified.

Relay Type Number	Identification
#1	No shield cover. Shield cover but no paint spot on shield cover. Yellow paint spot on shield cover.
#2	Red paint spot on cover. Red and green paint spot on cover.
#3	Blue paint spot on cover.

Relay type #1 was the first one used and most of the relay trouble probably will be experienced with this type. Relay type #2 is considerably improved and should give very much less trouble than type #1. It has the same coil construction as type #1 but has a different contact arrangement. Relay type #3 has the same contact arrangement as type #2 but has considerably stiffer springs and heavier contact pressure. It also has a higher resistance coil requiring 85 milliamperes to actuate the relay instead of the 60 milliamperes minimum required for type #1 and #2.

THE TYPE #3 RELAY SHOULD BE INSTALLED IN THE EVENT OF ANY RELAY TROUBLE WITH EITHER TYPE #1 OR TYPE #2 RELAY.

Replacing Relay Types #1 Or #2 With Type #3:

The connections to the terminals of the type #2 relay remain the same for the new type #3. The changes in connections from type #1 to #3 are: Consider the terminal to be numbered from 1 to 5 with terminal 5 the one nearest the coil. The lead that originally connected to terminal 1 of the type #1 relay is to be connected to terminal 5 of the type #3 relay. The original terminal 2 connection is to be changed to terminal 4. The original terminal 3 connection, to terminal 1. The original terminal 4 connection, to terminal 2. The original terminal 5 connection to terminal 3.

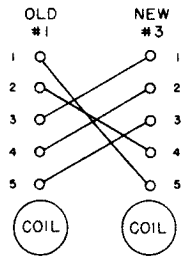

CHANGING TERMINAL CONNECTIONS FROM TYPE #1 RELAY TO TYPE #3 RELAY:

Certain circuit changes are required when relay type #3 is installed. The resistor, R37, across the relay coil is removed from the circuit. A .05 mfd. 200 volt condenser is connected from the spring arm that contacts the teeth of the semi circular toothed disc to the movable arm. A .1 mfd. 200 volt condenser is to be connected from the semi circular toothed disc to ground. These condensers are C48 and C49 in the Schematic Section, Fig. 1. Fig. 2 shows how the condensers should be mounted.

CORRECTING TOO HIGH MINIMUM VOLUME:

Sometimes, with the Volume Control set to its lowest position, the volume still is too high. This will occur in either the Flash Tuning positions or the conventional "Broad" and "Sharp" positions. To correct this, change the value of the condenser, C33, connected to the movable arm of the Volume Control, from .004 mfd. to .05 mfd.

If the center tap lug of the Volume Control is grounding to the chassis, it will prevent the volume from going to a low value. Examine this lug to be sure that it is not grounding to the chassis.

There have been instances of defective Volume Controls caused by arcing of the switch, burning the resistance element. Controls have been improved, eliminating this condition and it will not occur in replacement controls.

CORRECTING DIAL DRIVE SLIPPAGE:

Dial drive slippage may be due to the movable arm being set too close to the toothed disc. The arm will then press unnecessarily hard against the bent up teeth, making the condenser too hard to turn. If this appears to be the case, the adjusting screw on the movable arm should be loosened and the arm re-set so that it does not press too hard against the teeth.

ELIMINATING RECEPTION OF STATION OTHER THAN CHOSEN A.F.C. STATION:

The following condition sometimes occurs. Normally, a station that has been set up on the toothed disc will be heard whenever the dial pointer is turned to its call letters. It sometimes happens though that the station will only be heard if it is approached from one end of the dial but an adjacent station will be heard if approached from the other end of the dial. This is due to the fact that the proper tooth was not selected carefully enough for the station, and an adjacent tooth was bent up instead. The remedy is to put the receiver in the "SHARP" position, tune in the desired station very carefully, and to be sure to bend up the tooth that is under the projection of the contacting arm.

CORRECTING FAULTY A.F.C. MUTING:

Normally, when the receiver is in the Flash Tuning position, a station will not be heard until the Flash Tuning light operates. If the muting is faulty, the station may be heard before its call letters become illuminated and may continue to be heard after the pointer has been turned past the station's position and the Flash Tuning light has gone out. If this type of trouble is encountered, it can be corrected by making the circuit changes shown in Fig. 3. The dotted lines indicate the new connections. "X"'s indicate old connections to be broken. As will be seen, the original suppressor to cathode connections of both 6K7G tubes are to be broken. The cathode connections of the tubes remain as they were. The suppressors of the two tubes are to be connected together by a 500M ohm resistor, R40. A .1 mfd. 200 volt condenser, C50, is to be connected directly from the suppressor terminal of the 6K7G RF tube socket to ground. The suppressor of the 6K7G IF tube is to be connected to the junction of R27 and C37, as shown in Fig. 3. These changes increase the muting action by putting a negative biasing voltage on the suppressors of the RF and IF tubes.

NOTE: In extreme cases, that is if the receiver is located near a very powerful station, muting may be still unsatisfactory on that station even after the changes mentioned in the preceding paragraph have been made. If desired, in such extreme cases, the muting can be further improved by changing the value of R36 from 750M ohms to 100M ohms. However, doing so will increase the amount of "thump" or "click" that occurs when tuning stations in or out. Since this change is only for extreme cases the 100M ohm resistor is not included in the kits.

©John F. Rider, Publisher

©John F. Rider, Publisher

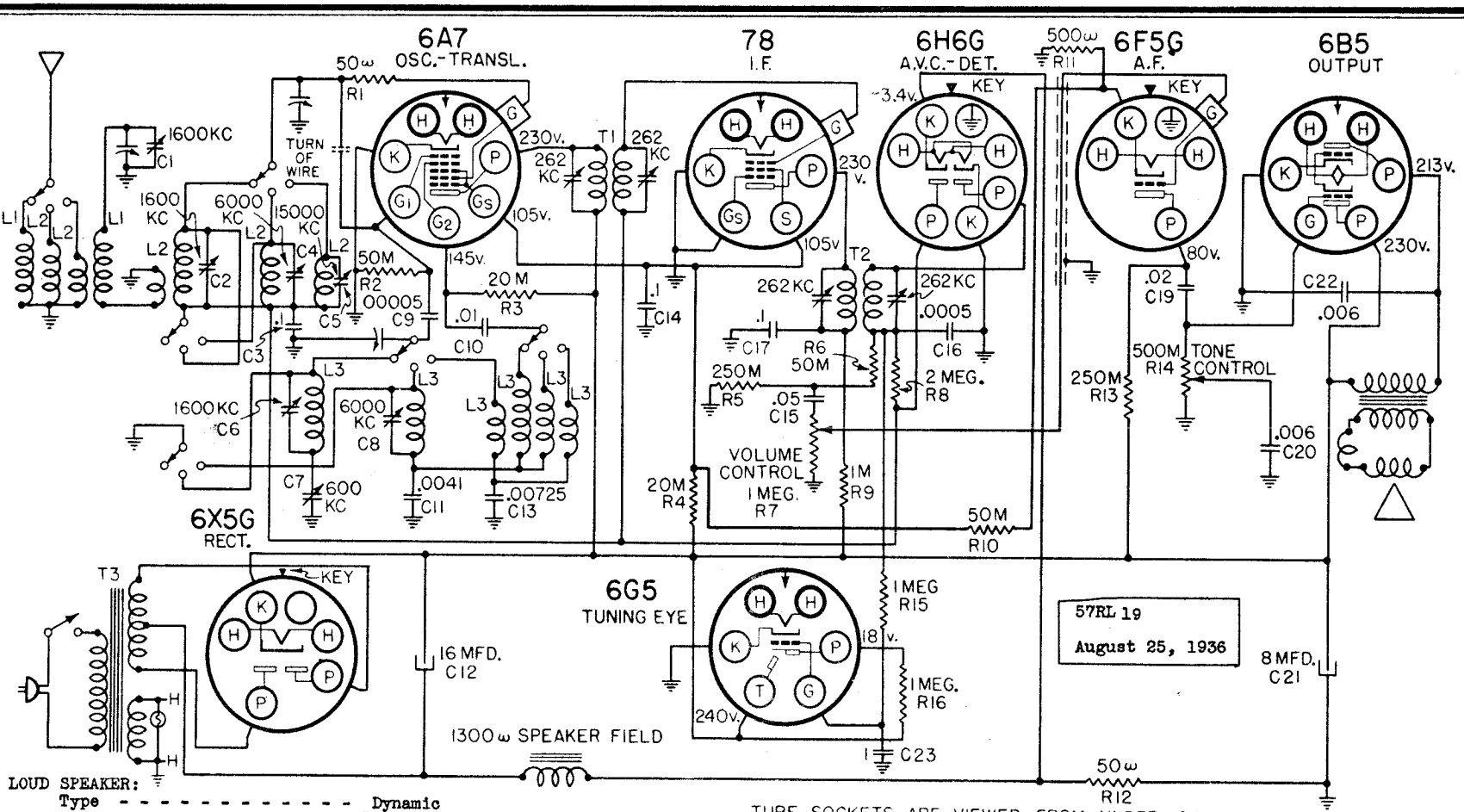

LOUD SPEAKER:

Type	Dynamic
Size	6" and 8"
Field coil resistance	1300 ohms
Field coil voltage	75 volts

TRANSFORMER COLOR CODE

1-Blue
2-Blue
3-Red
4-Green
5-Red
6-Black
7-Black

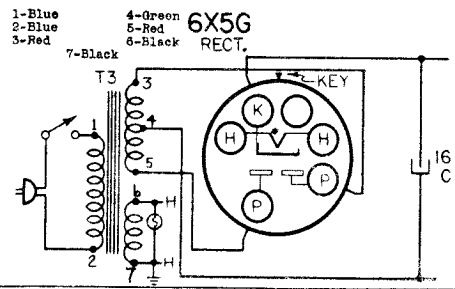

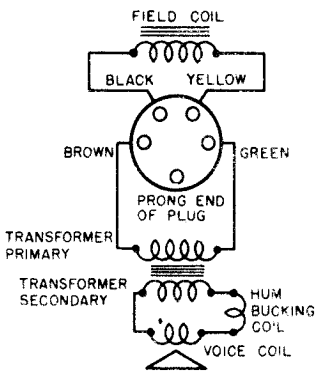

TUBE SOCKETS ARE VIEWED FROM UNDER SIDE OF CHASSIS.
VOLTAGE READINGS AT INDICATED SOCKET PRONGS ARE TO CHASSIS.
ALIGNMENT IS TO BE MADE AT THE FREQUENCIES SHOWN AT THE TRIMMER CONDENSERS.
WHERE NO VOLTAGE READING IS SHOWN AT SOCKET PRONG, IT INDICATES A VERY LOW READING.

POWER SUPPLY:

All models available	105-125 volts, 50-60 cycle, 48 watts
All models available	105-125 volts, 25 cycle, 50 watts

POWER OUTPUT:

Type	Single Pentode
Undistorted	2.66 watts
Maximum	4 watts

INTERMEDIATE FREQUENCY - - - - - - - - - - 262 kc

SEARS-ROEBUCK & CO.

MODEL 4566
Schematic, Voltage
Speaker Conn., Specs.
Transformer Conn.

©John F. Rider, Publisher

ALIGNMENT PROCEDURE

PRELIMINARY:

Output meter connections - Across voice coil leads

Output meter reading to indicate .5 watts output - - - - - - - - - - - - - - - - - - 1.3 volts

Average sensitivity in microvolts for .5 watts output - - - - - - - - - - - - See chart below

Dummy antenna value to be in series with generator output - - - - - - - - - - See chart below

Connection of generator output lead - See chart below

Generator modulation - 30%, 400 cycles

Position of volume control - Fully clockwise

Position of tone control - Fully clockwise

WAVE BAND SWITCH POSITION	POSITION OF DIAL POINTER	GENERATOR FREQUENCY	DUMMY ANTENNA	GENERATOR CONNECTION	TRIMMERS ADJUSTED (IN ORDER SHOWN)	APPROXIMATE MICROVOLTS
"A"	-	262 kc	.1 mfd.	6A7 Grid	T2,T1	-
-	To fall on center line of dial when variable is fully meshed.	-	-	-	-	-
"A"	1600 kc	1600 kc	.0002 mfd.	Antenna Terminal	C6,C2,C1	40
"A"	600 kc (rock)	600 kc	.0002 mfd.	Antenna Terminal	C7	40
"P"	6 mc	6 mc	400 ohms	Antenna Terminal	C8	-
"P"	6 mc (rock)	6 mc	400 ohms	Antenna Terminal	C4	25
"P"	15 mc (rock)	15 mc	400 ohms	Antenna Terminal	C5	30
"P"	7 mc	7 mc	400 ohms	Antenna Terminal	Loop at bracket end of L3	80

IMAGE ADJUSTMENT

Set the generator to 1524 kc and tune in the signal image at about 1000 kc on the receiver. The generator should be adjusted for high output (.1 volts). There is a lead running from L1 through a hole in the chassis to the wave switch. Adjust the position of this lead under the chassis for minimum image response.

IMPORTANT ALIGNMENT NOTES

Where indicated by the word, "Rock", the variable should be rocked back and forth a degree or two while making the adjustment.

It is advisable to repeat the entire alignment procedure band by band and in the original order to insure greater accuracy.

Always keep the output from the test oscillator at its lowest possible value. As the sensitivity is increased by alignment, the generator output should be reduced correspondingly.

After the alignment procedure has been completed, tune in a broadcast signal at about 1000 kc. If necessary, shift the dial pointer so that it indicates this frequency.

Values shown under, "Microvolts", are only approximate.

WAVE-TRAP TO ELIMINATE INTERFERENCE FROM SHIP OR AIRPORT TRANSMITTERS:

Mount the trap, by means of two wood screws, at any convenient place on the chassis shelf or cabinet where it will be near the antenna terminal of the receiver. Connect the yellow lead of the wave-trap to the antenna downlead. Connect the green lead of the wave-trap to the antenna terminal of the receiver. Cut off any excess length of wire so that the green lead from the wave-trap to the chassis is as short as possible. The yellow lead from the wave-trap should be run so that it is as far as possible from the green lead. Connect the black lead from the wave-trap to the ground terminal on the chassis.

The traps are pre-tuned to the IF frequency so that ordinarily no further adjustment will be necessary. However, if interference still is experienced, tune the trap by means of the trimmer screw at the bottom of the container, until the interfering signal is eliminated.

In LATE PRODUCTION of this trap only two leads were used, black and green. The green lead is to be connected to the green antenna lead of the receiver or connected to the ant. term. if the rec. has a term. Bd. The black lead of the trap is to be connected to ground.

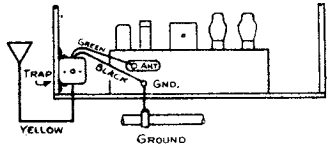

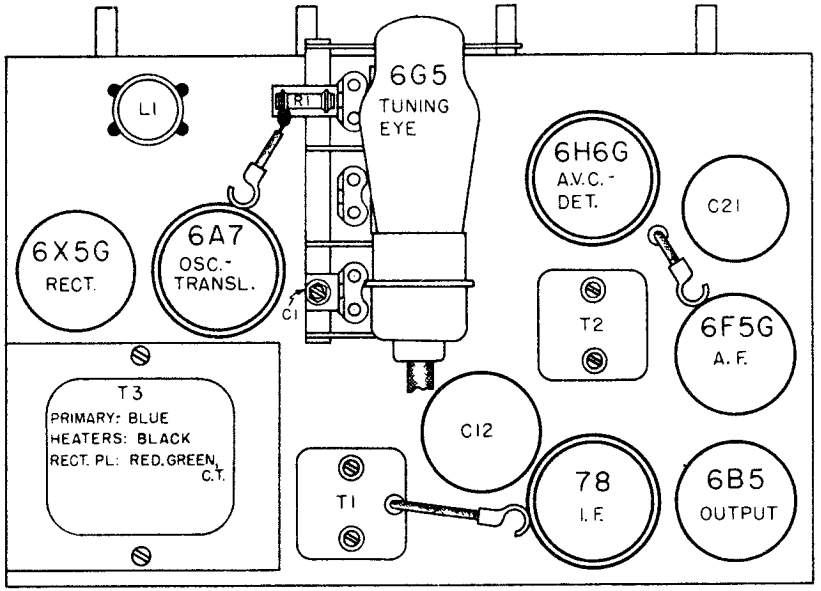

LOCATIONS OF PARTS ON TOP OF CHASSIS

LOCATIONS OF PARTS UNDER CHASSIS

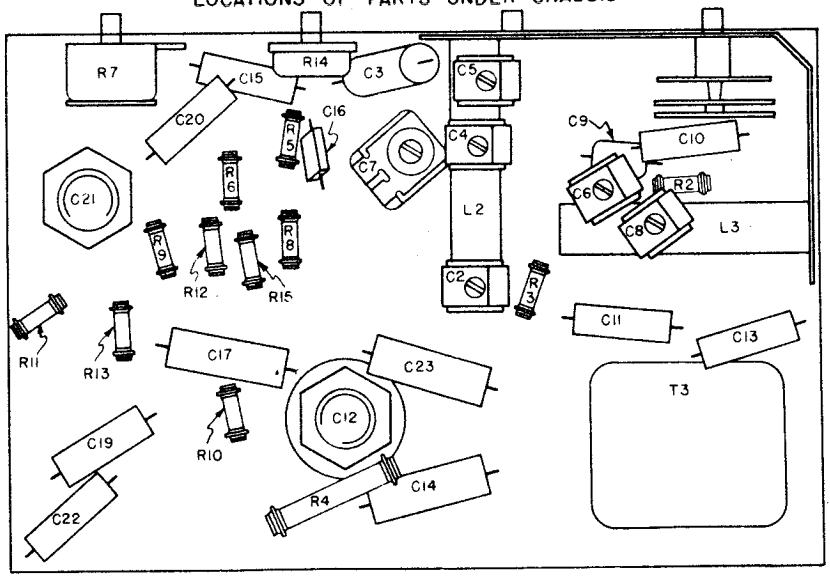

SEARS-ROEBUCK & CO.

MODEL 4593
Schematic, Voltage
Transf., Specs.

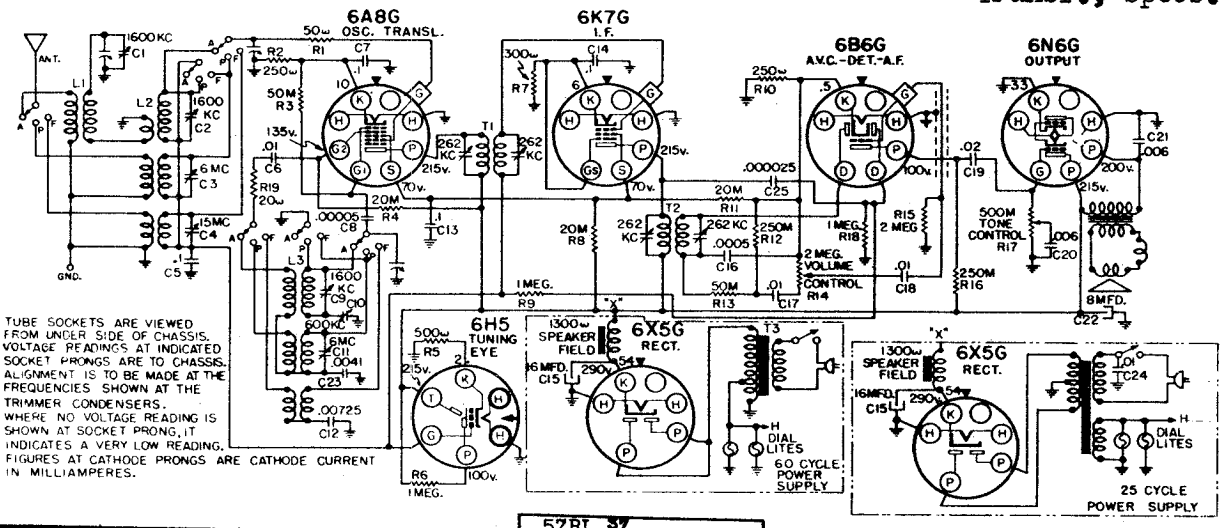

57RL 37

January 25, 1937

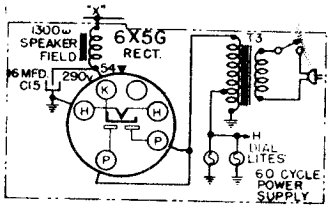

60 CYCLE TRANSF. COLOR CODE

1-Red	3-Black
2-Orange	4,5-Blue

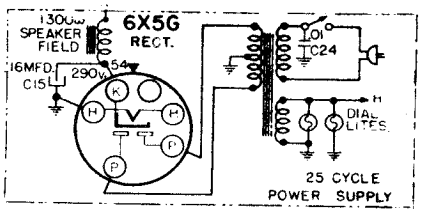

25 CYCLE TRANSF. COLOR CODE

1,3-Red	4,5-Blue
2-Green	6,7-Black

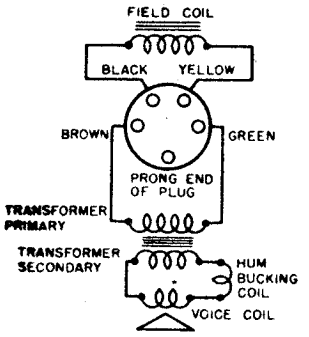

POWER SUPPLY:
All models available . . . . . 105-125 volts, 50-30 cycle, 55 watts
All models available . . . . . 105-125 volts, 25 cycle, 45 watts

FREQUENCY RANGES:
Band "A" . . . . . 540-1800 kc
Band "P" . . . . . 2-6.5 mc
Band "F" . . . . . 6.4-19.2 mc

ALIGNMENT FREQUENCIES:

	Oscil. Trimmer	Ant.-Transl. Trimmer	Padder
Band "A"	1600 kc	1600 kc	600 kc
Band "P"	6 mc	6 mc	Fixed
Band "F"	-	15 mc	Fixed

INTERMEDIATE FREQUENCY . . . . . 262 kc

POWER OUTPUT:
Type . . . . . Triple Twin
Undistorted . . . . . 2 watts
Maximum . . . . . 4 watts

LOUD SPEAKER:
Type . . . . . Dynamic
Size . . . . . 8"
Field coil resistance . . . 1300 ohms
Field coil voltage drop . . 75 volts

OPERATING FEATURES:
Fidelity Range . . . 50 - 5000 cycles
Tone Control . . . . . Variable
Automatic Volume Control

CHASSIS FEATURES:
Preselector on band "A"
Antenna . . . . . Conventional
Tuning Eye

MECHANICAL SPECIFICATIONS

OPERATING CONTROLS:
1. Left knob . . . "On-Off" switch and Volume
2. Next to left knob . . Tone Control
3. Next to right knob . . . . Station Selector
4. Right knob . . . Wave Band Switch

CONTROL OPERATION:
Turning right: Power on; Volume increase
Turning right: Bass to Treble
Tuning ratio: 20 to 1
Turning right: "A", "P", "F"

©John F. Rider, Publisher

©John F. Rider, Publisher

ALIGNMENT PROCEDURE

PRELIMINARY:

Output meter connections . . . . . Across voice coil leads
Output meter reading to indicate .5 watts output . . . . . 1.3 volts
Average sensitivity in microvolts for .5 watts output . . . . . See chart below
Dummy antenna value to be in series with generator output . . . . . See chart below
Connection of generator output lead . . . . . See chart below
Generator modulation . . . . . 30%, 400 cycles
Position of Volume Control . . . . . Fully clockwise
Position of Tone Control . . . . . Fully clockwise
Position of Dial Pointer . . . . . To fall on last indicating mark of band "A" scale (past 550), when variable is fully closed.

WAVE BAND SWITCH POSITION	POSITION OF DIAL POINTER	GENERATOR FREQUENCY	DUMMY ANTENNA	GENERATOR CONNECTION	TRIMMERS ADJUSTED (IN ORDER SHOWN)	TRIMMER FUNCTION	APPROXIMATE MICROVOLTS
"A"	550 kc	262 kc	.1 mfd.	6A8G Grid	T2,T1	IF Output IF Input	92
"A"	1600 kc	1600 kc	.0002 mfd.	Ant. Term.	C9,C2,C1	Osc., Transl., Antenna	35
"A"	600 kc (rock)	600 kc	.0002 mfd.	Ant. Term.	C10	Osc. Pad.	35
"P"	6 mc	6 mc	400 ohms	Ant. Term.	C11	Oscillator	-
"P"	6 mc (rock)	6 mc	400 ohms	Ant. Term.	C3	Translator	35
"F"	15 mc (rock)	15 mc	400 ohms	Ant. Term.	C4	Translator	40
"F"	7 mc	7 mc	400 ohms	Ant. Term.	Loop at bracket end of L3		120

IMAGE ADJUSTMENT

Set the generator to 1524 kc and tune in the signal image at about 1000 kc on the receiver. The generator should be adjusted for high output (.1 volts). There is a lead running from L1 through a hole in the chassis to the wave switch. Adjust the position of this lead under the chassis for minimum image response.

IMPORTANT ALIGNMENT NOTES

Where indicated by the word, "Rock", the variable should be rocked back and forth a degree or two while making the adjustment.

It is advisable to repeat the entire alignment procedure band by band and in the original order to insure greater accuracy.

Always keep the output from the test oscillator at its lowest possible value. As the sensitivity is increased by alignment, the generator output should be reduced correspondingly.

After the alignment procedure has been completed, tune in a broadcast signal at about 1000 kc. If necessary, shift the dial pointer so that it indicates this frequency.

Values shown under, "Microvolts", are only approximate.

THE AVC CIRCUIT:

The diode current of one of the diode plates of the 6B6G tube, flowing through the one megohm resistor, R18, creates a voltage drop across this resistor. This voltage is applied to the control grids of the 6A8G and 6K7G tubes to provide AVC.

DIFFERENCES BETWEEN 25 CYCLE AND 60 CYCLE POWER SUPPLY:

The 6X5G rectifier tube is used as a half wave rectifier for 60 cycle supply. Full wave rectification is used for 25 cycle supply.

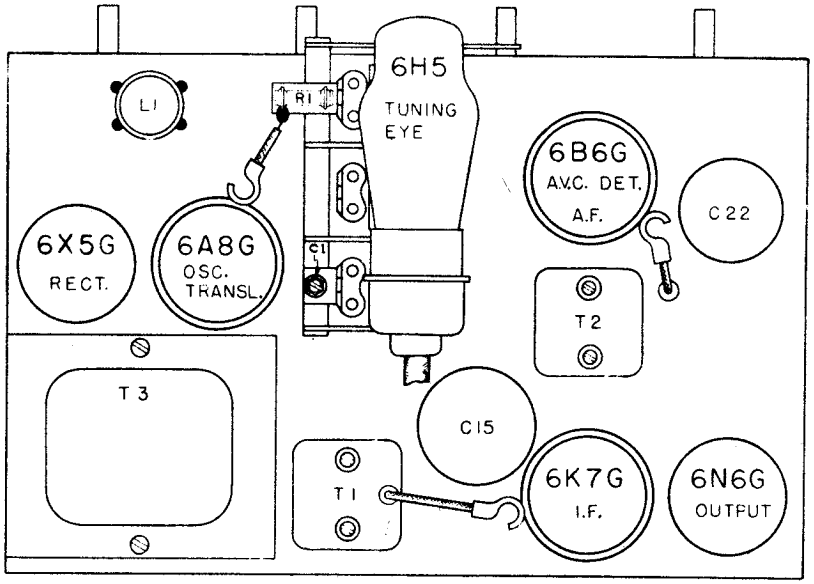

LOCATIONS OF PARTS TOP OF CHASSIS

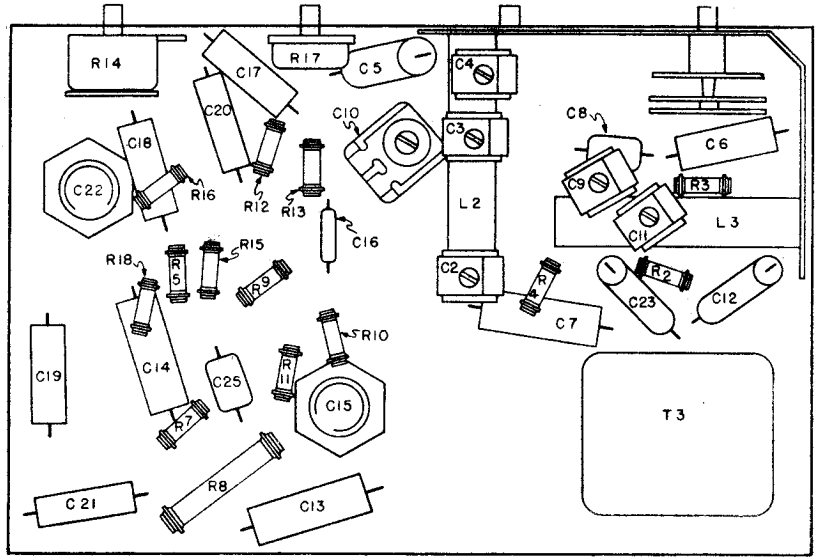

LOCATIONS OF PARTS UNDER CHASSIS

SEARS-ROEBUCK & CO.

©John F. Rider, Publisher

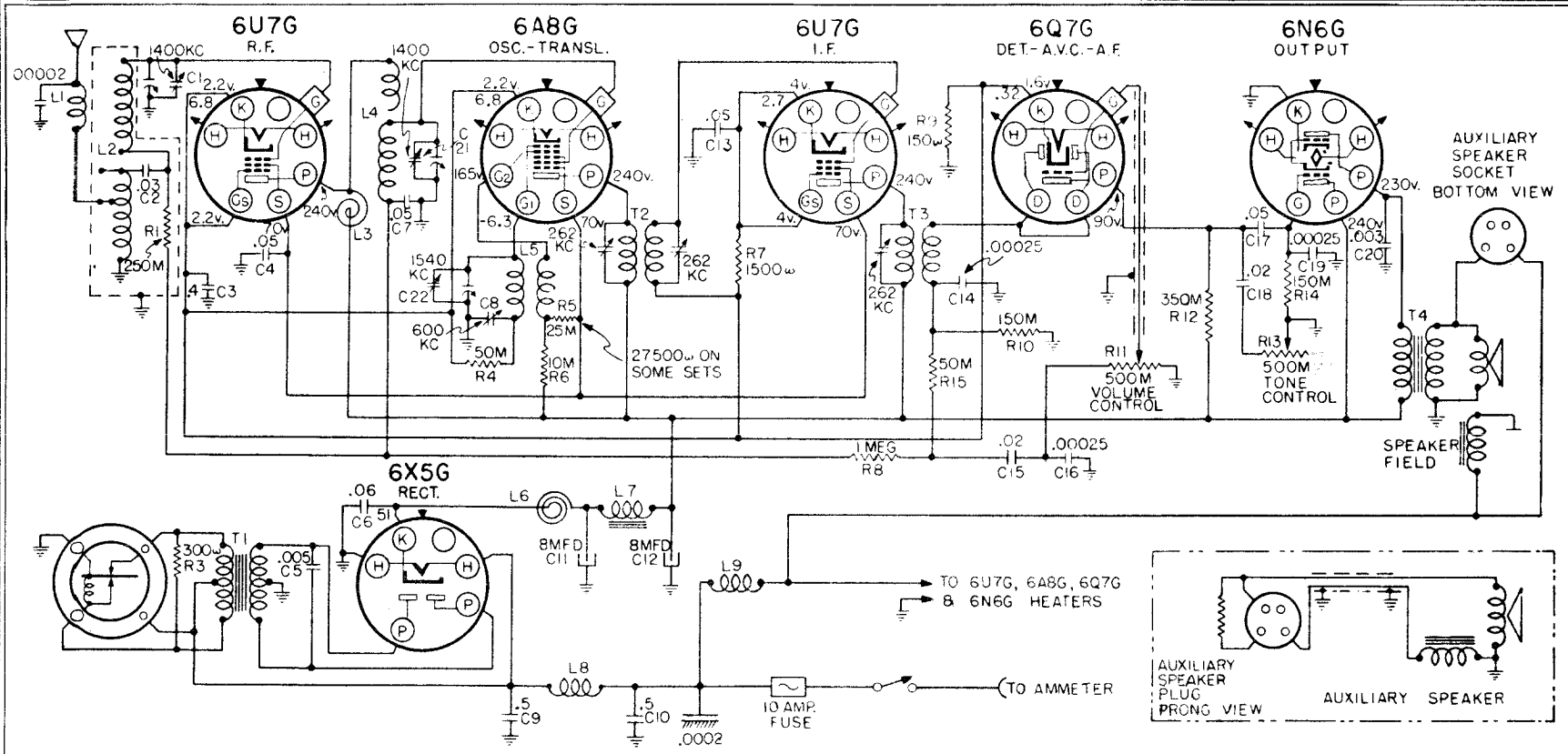

TUBE SOCKETS ARE VIEWED FROM UNDER SIDE OF CHASSIS.
VOLTAGE READINGS AT INDICATED SOCKET PRONGS ARE TO CHASSIS.
ALIGNMENT IS TO BE MADE AT THE FREQUENCIES SHOWN AT THE TRIMMER CONDENSERS.
WHERE NO VOLTAGE READING IS SHOWN AT SOCKET PRONG, IT INDICATES A VERY LOW READING.
FIGURES AT CATHODES INDICATE CATHODE CURRENT IN MILLIAMPERES

MAY 24, 1937

CHASSIS 101.458

POWER TRANSFORMER COLOR CODE

1,2,3-Solid Conductor — 5-Slate
4-Red — 6-Blue

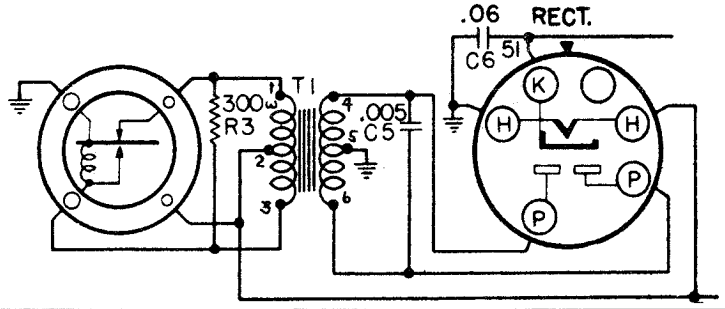

FREQUENCY RANGE:
Broadcast . .540-1540 kc

ALIGNMENT FREQUENCIES:

	Oscillator Trimmer	Ant.-Translator Trimmer	Padder
	1540 kc	1400 kc	600 kc

INTERMEDIATE FREQUENCY . . . . . 262 kc

POWER OUTPUT:
Type . . . . Triple Twin
Undistorted . 3.5 watts
Maximum . . . . 6 watts

LOUD SPEAKER:
Type . . . . . Dynamic
Size . . . . . 8"
Approximate field resistance . . 4 ohms

POWER SUPPLY:
"A" . . . . . 6 volt, Automobile storage battery.
"B" . . . . . Vibrator-Rectifier
"A" Drain . . 7.6 amperes
"B" Drain . . . . 54 ma

SEARS ROEBUCK & CO.
MODEL 4600
Chassis 101.458
Schematic, Voltage

MODEL 4600
Chassis 101.458
Socket, Trimmers

SEARS ROEBUCK & CO.

Alignment, Chassis Sensitivity

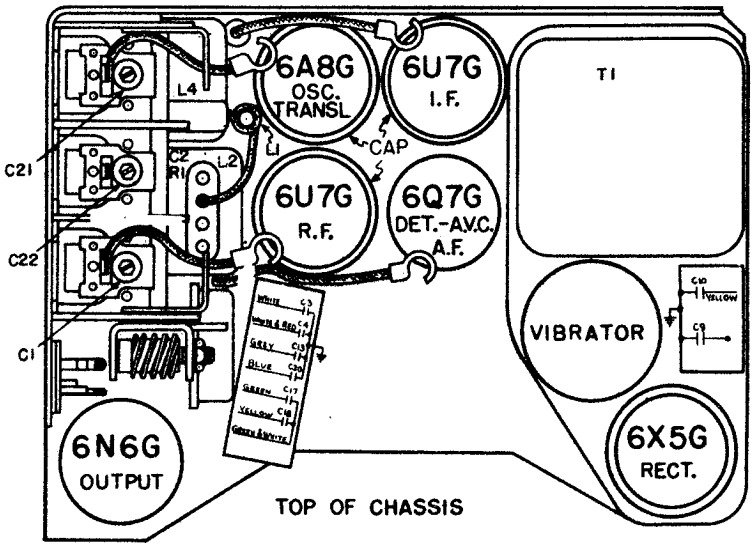

LOCATIONS OF PARTS

UNDER CHASSIS

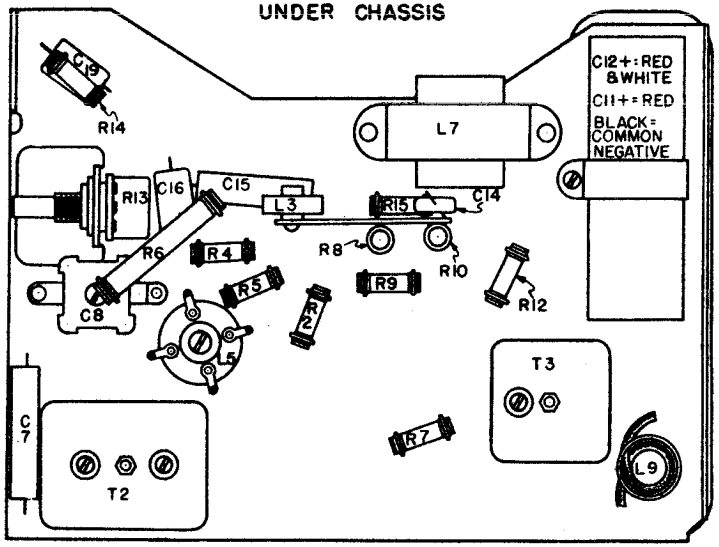

PRELIMINARY:

ALIGNMENT PROCEDURE

Output meter connections . . . . . Across loud speaker voice coil

Output meter reading to indicate 1 watt . . . . . 1.34 volts

Average sensitivity in microvolts for 1 watt output . . . . . See chart below

Generator ground lead connection . . . . . Receiver chassis

Dummy antenna value to be in series with generator output . . . . . See chart below

Connection of generator output lead . . . . . See chart below

Generator modulation . . . . . 30%, 400 cycles

Position of Volume Control . . . . . Fully on

Position of Tone Control . . . . . Fully clockwise (treble)

Position of Antenna Tap . . . . . #1 hole

The Chassis must be in its case although the covers may be removed during the alignment procedure.

POSITION OF VARIABLE	GENERATOR FREQUENCY	DUMMY ANTENNA	GENERATOR CONNECTION	TRIMMER ADJUSTMENTS (IN ORDER SHOWN	TRIMMER FUNCTION	APPROXIMATE MICROVOLTS
Closed	362 kc	.1 mfd.	6A8G Grid	T3,T2	IF	600
Fully Open	1540 kc	.0003 mfd.	Antenna Conn.	C22	Osc. Trim.	1
1400 kc	1400 kc	.0002 mfd.	Antenna Conn.	C1,C21	Ant. Transl.	1
600 kc (rock)	600 kc	.0002 mfd.	Antenna Conn.	C8	Padder	2

IMPORTANT ALIGNMENT NOTES

The variable should be rocked back and forth a degree or two while making the 600 kc adjustment.

The alignment procedure should be repeated in the original order, step by step, to insure greater accuracy.

Always keep the output power from the generator at its lowest possible value to prevent the AVC of the receiver from interfering with accurate alignment.

Antenna Matching:

Two separate adjustments are provided for matching the receiver to the particular car antenna. One adjustment consists of two taps on the antenna coil. The second adjustment is a trimmer, C1, on the variable condenser. It is accessible through a hole in the bottom cover of the receiver case. These adjustments are to be made as follows:

The Tapped Antenna Coil:

The adjustment of the tapped antenna coil should be made before installing the receiver on the car. Removal of the bottom cover of the receiver will reveal a terminal board mounted in the antenna coil shield can. The variable condenser plates must be closed for it to be seen. This terminal board has four jack holes, only two of which are used. These two are marked with the numerals "1", "2". In some sets these marked holes are the first two holes. In other sets they are the two end holes. In either case they are marked. The sets are shipped with the plug in hole #1. This adjustment is correct for factory built-in aerials in cars having a fabric top. It is also correct for SILVERTONE Catalog #57E5559 Standard "V" Type Under-car Aerial; Catalog #57E5556 Deluxe Auto Aerial; Catalog #57E5570 Aerod Auto Aerial.

The plug must be removed from hole #1 in the terminal board and inserted in hole #2 for cars having the following types of aerial.

1. Cars having an insulated steel top connected at the factory for use as an aerial.
2. Cars using insulated running boards as the aerial (1937 Buicks and Oldsmobiles).
3. Cars using some insulated part of the car as the aerial. For example, insulated trunks, rear-deck covers, spare tire covers, etc.

The Antenna Trimmer Adjustment:

With the set tuned to a weak station at about 1500 kilocycles, turn the adjusting screw to the point affording maximum volume. A weak station must be used to prevent the AVC action of the receiver from interfering with accurate peaking. If a peak cannot be reached with the trimmer, the capacity of the car's antenna may be such that the other antenna tap adjustment should be used.

©John F. Rider, Publisher

© John F. Rider, Publisher

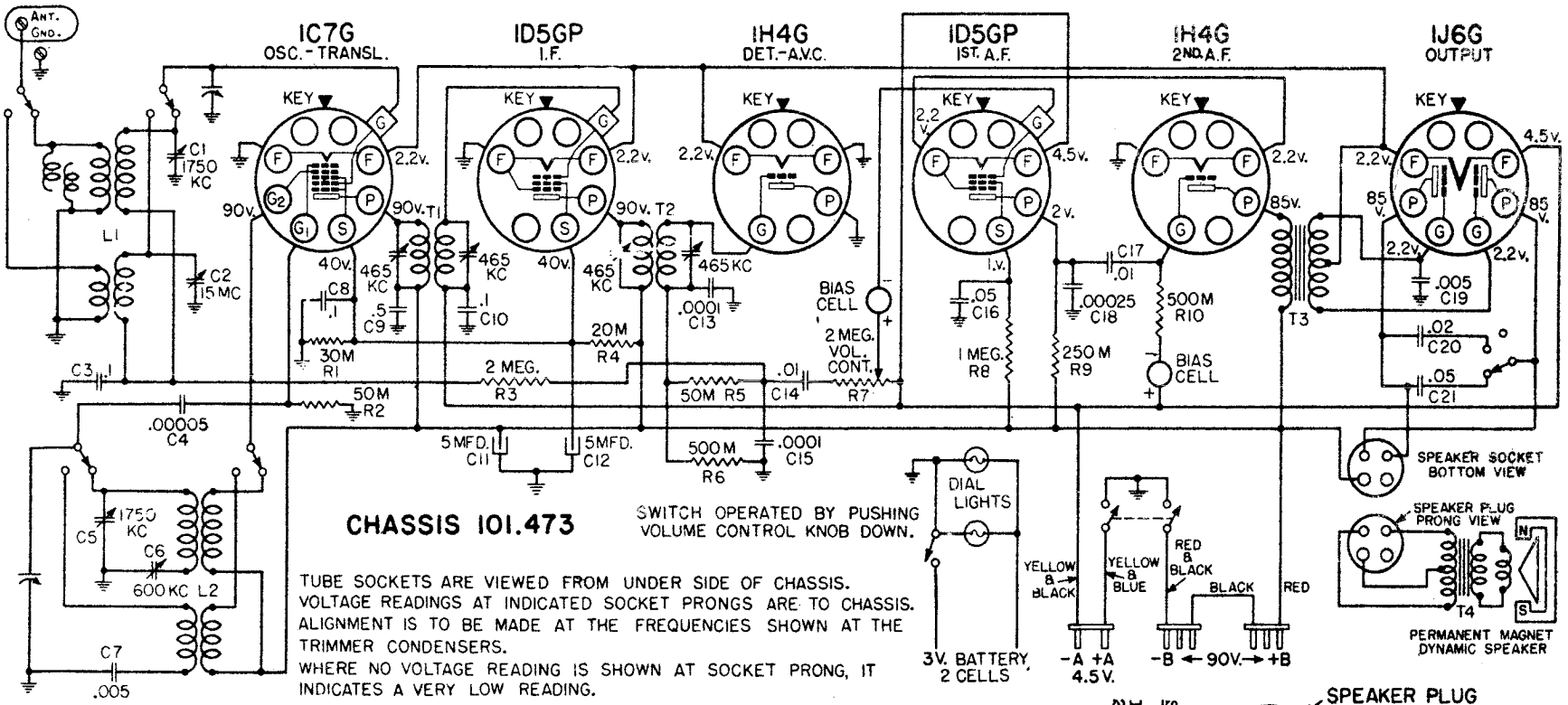

CHASSIS 101.473

SWITCH OPERATED BY PUSHING VOLUME CONTROL KNOB DOWN.

TUBE SOCKETS ARE VIEWED FROM UNDER SIDE OF CHASSIS.
VOLTAGE READINGS AT INDICATED SOCKET PRONGS ARE TO CHASSIS.
ALIGNMENT IS TO BE MADE AT THE FREQUENCIES SHOWN AT THE TRIMMER CONDENSERS.
WHERE NO VOLTAGE READING IS SHOWN AT SOCKET PRONG, IT INDICATES A VERY LOW READING.

POWER SUPPLY:

"A" Battery (4½ volt dry) . .	1 - #5032
"A" Battery (4 volt storage)	1 - #5049
"B" Batteries	2 - #6131P

FREQUENCY RANGES:

Band "A"	540-1750 kc
Band "F"	5.8-18 mc

INTERMEDIATE FREQUENCY . . . . . 465 kc

POWER OUTPUT:

Type	Class "B"
Undistorted	0.4 watts
Maximum	1.1 watts

OPERATING FEATURES:

Tone Control . . . . . Three Point
Automatic Volume Control
"On-Off" indicator
Dial Flash-O-Lite

"A" Drain	0.3 amperes
"B" Drain	31 ma

ALIGNMENT FREQUENCIES:

	Oscil. Trimmer	Ant.-Transl. Trimmer	Padder
Band "A"	1400 kc	1400 kc	600 kc
Band "F"	-	15 mc	Fixed

LOUD SPEAKER:

Type	PM Dynamic
Size	6 inch

CHASSIS FEATURES:

Number IF stages	One
Antenna	Marconi
Built-in wave-trap for signals of IF frequency	

SPEAKER PLUG COLOR CODE AUGUST 10, 1937

1. Blank
2. Red
3. Brown
4. Green

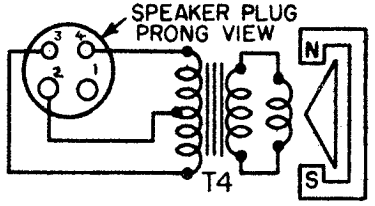

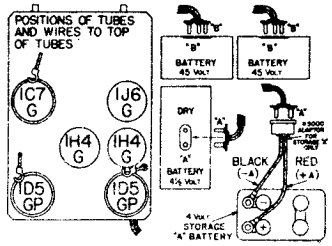

MODELS 4606-7,4626-7,4646-7
4726,4746 Chassis 101.473

SEARS ROEBUCK & CO.

Socket,Trimmers,Chassis Alignment,Sensitivity,Data

LOCATIONS OF PARTS ON TOP OF CHASSIS

LOCATIONS OF PARTS UNDER CHASSIS

ALIGNMENT PROCEDURE

PRELIMINARY:

Output meter connection . . . . . Across loud speaker voice coil
Output meter reading to indicate 50 milliwatts . . . . . 0.43 volts
Generator ground lead connection . . . . . Receiver chassis
Dummy antenna value to be in series with generator output . . . . . See chart below
Connection of generator output lead . . . . . See chart below
Generator modulation . . . . . 30%, 400 cycles
Approximate average sensitivity in microvolts for 50 milliwatts output . . . See chart below
Position of Volume Control . . . . . Fully clockwise
Position of Tone Control . . . . . Fully clockwise
Position of Dial Pointer with variable fully closed . . . To fall in center of embossed gold block that is about 1/4" to the left of the letters, "MC" at the low frequency end of the FOREIGN scale.

WAVE BAND SWITCH POSITION	POSITION OF VARIABLE	GENERATOR FREQUENCY	DUMMY ANTENNA	GENERATOR CONNECTION	TRIMMERS ADJUSTED (IN ORDER SHOWN).	TRIMMER FUNCTION	APPROXIMATE MICROVOLTS
"A"	550 kc	465 kc	.1 mfd.	107G Grid	12,T1	IF Output, IF Input	150
"A"	1400 kc	1400 kc	.0002 mfd.	Ant. Term.	C1, C5	Antenna Oscillator	65
"A"	600 kc (rock)	600 kc	.0002 mfd.	Ant. Term.	C6	Padder	30
"A"	1400 kc	1400 kc	.0002 mfd.	Ant. Term.	C1, C5	Antenna Oscillator	65
"F"	15 mc (rock)	15 mc	400 ohms	Ant. Term.	C2	Translator	40
"F"	6 mc	6 mc	400 ohms	Ant. Term.	-	-	250

IMPORTANT ALIGNMENT NOTES

Where indicated by the word, "Rock", the variable should be rocked back and forth a degree or two while making the adjustment.

The figures given in the "Microvolts" column are only approximate.

Note that the 1400 kc alignment is to be repeated after the 600 kc padder adjustment.

The alignment procedure should be repeated stage by stage, in the original order, for greatest accuracy. Always keep the output from the test oscillator at its lowest possible value to make the AVC action of the receiver ineffective.

The high frequency limit of the Broadcast band is 1750 kc although the last dial marking is 1600 kc. This dial marking is only to obtain symmetry of appearance in the dial.

BATTERY REPLACEMENT:

The dry "A" battery should be replaced when its voltage drops to 3.4 volts, under load. Approximately 510 hours of service can be expected before the "A" battery voltage drops to this value (based on 3 to 4 hours a day use). If the storage "A" battery is used, it should be recharged every 3 to 4 weeks. Approximately 375 hours of service can be expected from the "B" batteries supplied. Since this receiver uses a class "B" output stage the "B" drain will vary with the volume at which the radio is played. The customer should be informed of this fact and told that for longest "B" battery life the radio should not be played louder than necessary. The "B" batteries should be replaced when the voltage of the 90 volt block has dropped to 68 volts, under load. For longer uninterrupted service, heavy duty "B" batteries should be recommended.

ELIMINATING WHISTLE AT 930 KC:

A whistle, due to a beat between the second harmonic (930 kc) of the 465 kc IF, and a 930 kc signal may be experienced. In localities where the 930 kc station is one that is frequently listened to, it will be desirable to shift the whistle to some other point where it will not be objectionable. This can be done by shifting the IF frequency of the receiver. Determine at what point between 900 kc and 960 kc the whistle will be least objectionable. Dividing this frequency by two will give the new IF frequency to which the receiver should be aligned. For example, if it is determined that a whistle at 915 kc would not be objectionable, the IF should be realigned at 915/2 or 457.5 kc.

DIFFERENCES IN TONE CONTROLS:

Earlier production used a tone control knob having only two positions marked, "HI", "LO". Later production used three positions marked, "HI", "MED", "LO". In both types of set the Tone Control switch is a three position one and the medium tone adjustment can be had with the two position knob by turning the knob so that the marker pin is between "HI" and "LO".

©John F. Rider, Publisher

©John F. Rider, Publisher

WIRING DIAGRAM FOR SILVERTONE CHASSIS 101.487

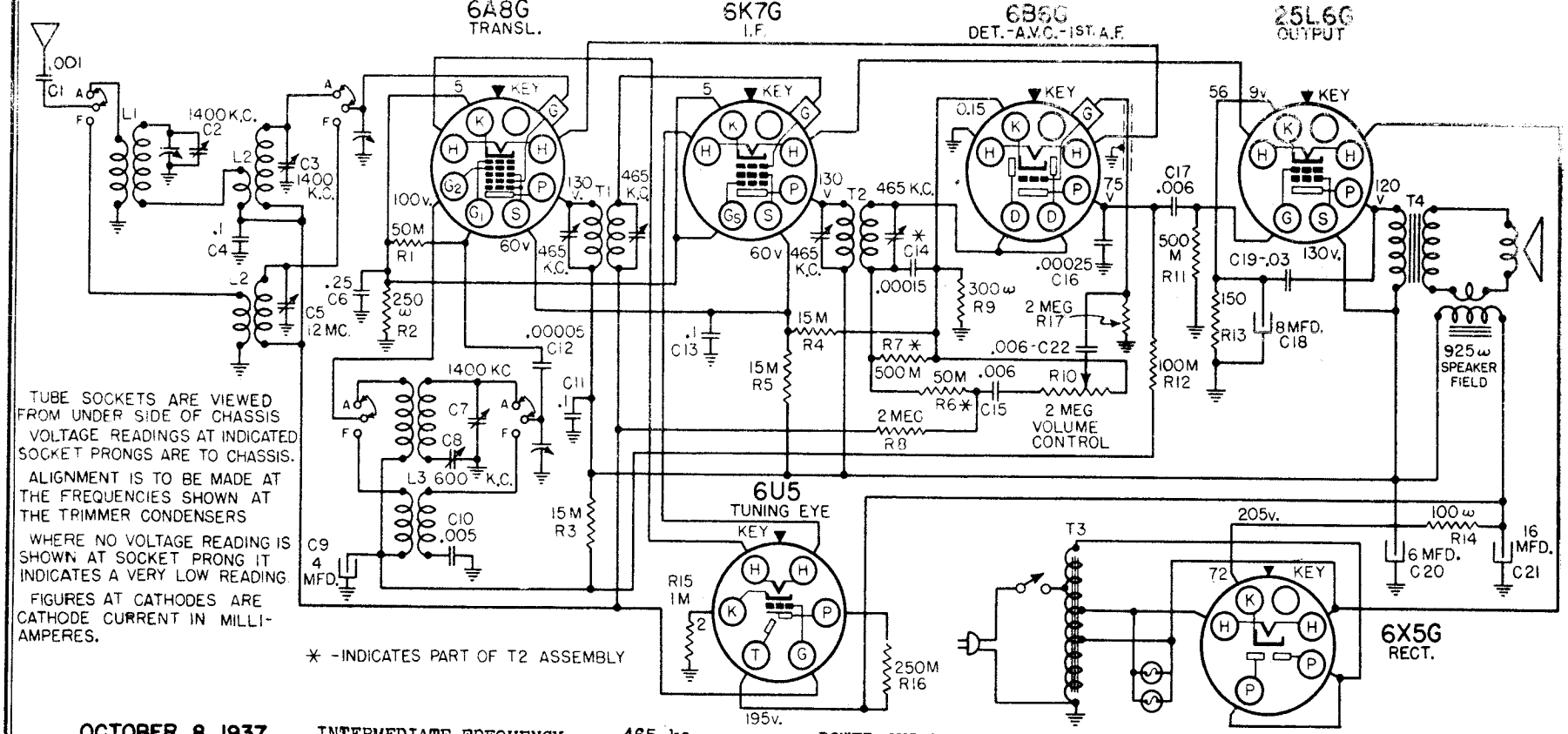

TUBE SOCKETS ARE VIEWED FROM UNDER SIDE OF CHASSIS

VOLTAGE READINGS AT INDICATED SOCKET PRONGS ARE TO CHASSIS.

ALIGNMENT IS TO BE MADE AT THE FREQUENCIES SHOWN AT THE TRIMMER CONDENSERS

WHERE NO VOLTAGE READING IS SHOWN AT SOCKET PRONG IT INDICATES A VERY LOW READING.

FIGURES AT CATHODES ARE CATHODE CURRENT IN MILLI-AMPERES.

✳ -INDICATES PART OF T2 ASSEMBLY

OCTOBER 8, 1937 INTERMEDIATE FREQUENCY . . . 465 kc

POWER SUPPLY:
All models available. . 105-125 volts, 60 cycle, 45 watts

TUBE LAYOUT

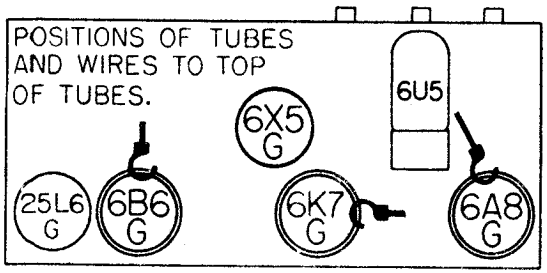

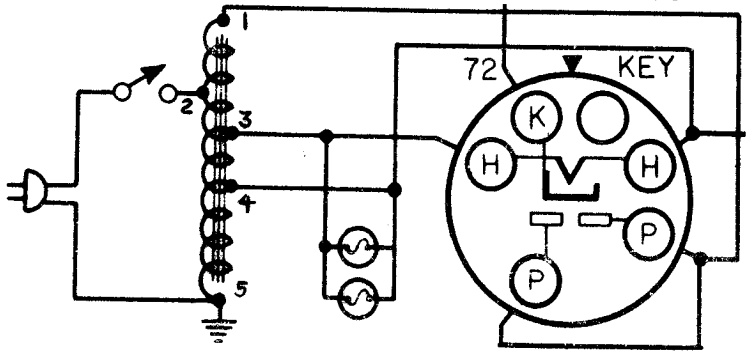

POWER TRANSFORMER COLOR CODE

1. RED. Rectifier Plate
2. GREEN. Primary
3. YELLOW. Heater
4. BLUE. Heater
5. BLACK. Primary, Grounded

SEARS ROEBUCK & CO.

MODELS 4611, 4660
Chassis 101.487
Schematic, Voltage
Socket, Transf. Data

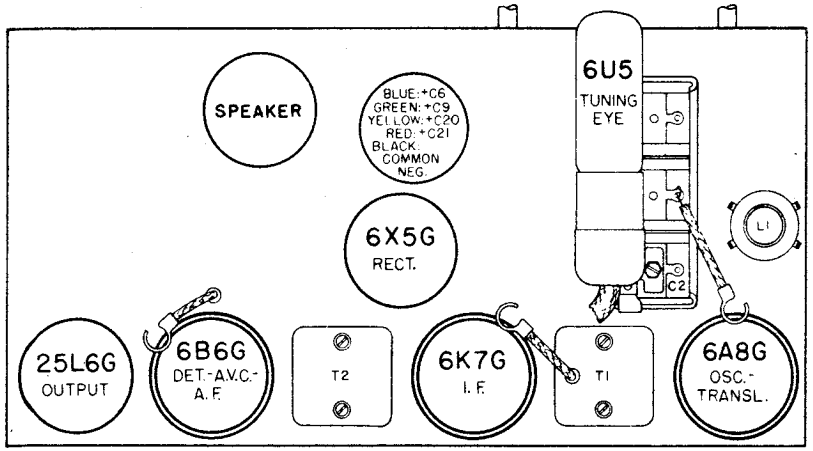

LOCATIONS OF PARTS ON TOP OF CHASSIS

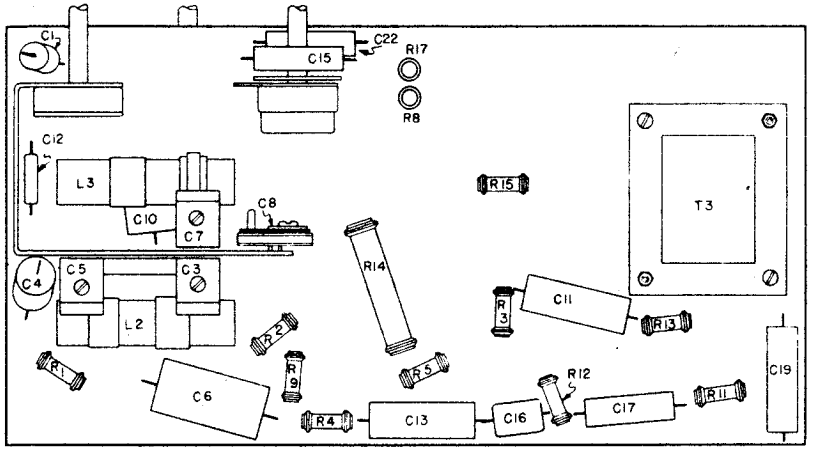

LOCATIONS OF PARTS UNDER CHASSIS.

FREQUENCY RANGES:

American	540-1750 kc
Foreign	3800-13,300 kc

POWER OUTPUT:

Type	Beam Tube
Undistorted	1.8 watts
Maximum	2.5 watts

ALIGNMENT FREQUENCIES:

	Oscil. Trimmer	Ant.-Transl. Trimmer	Padder
American	1750 kc	1400 kc	600 kc
Foreign	-	13 mc	-

LOUD SPEAKER:

Type	Dynamic
Size	6 inch
Field coil resistance (App.)	925 ohms

ALIGNMENT PROCEDURE

Output meter connnections . . . . . Across speaker voice coil

Output meter reading to indicate 50 milliwatts output . . . . . .0.38 volts

Dummy antenna value to be in series with generator output . . . . . See chart below

Connection of generator output lead . . . . . See chart below

Connection of generator ground lead . . . . . To external ground

Generator modulation . . . . . 30%, 400 cycles

Position of Volume Control . . . . . Fully clockwise

Position of Dial Pointer with variable fully closed . . . . . To fall along bottom edge of letters "MC" and "KC" at the 550 kc end of the dial.

WAVE BAND SWITCH POSITION	POSITION OF DIAL POINTER	GENERATOR FREQUENCY	DUMMY ANTENNA	GENERATOR CONNECTION	TRIMMERS ADJUSTED (IN ORDER SHOWN)	TRIMMER FUNCTION	APPROXIMATE MICROVOLTS
"AM"	550 kc	465 kc	.1 mfd.	6A8G Grid	T2,T1	IF	75
"AM"	Fully open	1750 kc	.0002 mfd.	*	C7	Oscillator Trimmer	150
"AM"	1400 kc	1400 kc	.0002 mfd.	*	C2,C3	Antenna Translator	100
"AM"	600 kc (rock)	600 kc	.0002 mfd.	*	C8	Padder	50
"FOR"	13 mc (rock)	13 mc	400 ohms	*	C5	Translator Trimmer	70

IMPORTANT ALIGNMENT NOTES

* Push a pin through the attached antenna wire at a point near where it comes out of the chassis so that the pin makes contact with the antenna wire inside the insulation. Connect the generator output lead to the pin. The generator output connection should not be made to the free end of the attached antenna wire.

Where indicated by the word, "Rock", the variable should be rocked back and forth a degree or two while making the adjustment.

The figures given in the "Microvolts" column are only approximate.

The alignment procedure should be repeated stage by stage, in the original order, for greatest accuracy. Always keep the output from the test oscillator at its lowest possible value to make the AVC action of the receiver ineffective.

After the alignment procedure has been completed, tune in a broadcast station at about 900 kc and, if necessary, shift the dial pointer to the station's frequency marking on the dial.

ELIMINATING WHISTLE AT 930 KC:

A whistle, due to a beat between the second harmonic (930 kc) of the 465 kc IF, and a 930 kc signal may be experienced. In localities where the 930 kc station is one that is frequently listened to, it will be desirable to shift the whistle to some other point where it will not be objectionable. This can be done by shifting the IF frequency of the receiver.

Determine at what point between 900 kc and 960 kc the whistle will be least objectionable. Dividing this frequency by two will give the new IF frequency to which the receiver should be aligned. For example, if it is determined that a whistle at 915 kc would not be objectionable, the IF should be realigned at 915/2 or 457.5 kc. Try to choose the new IF frequency as near to 465 kc as possible.

POWER TRANSFORMER:

An auto-transformer is used. Therefore, under certain conditions, the chassis may be above ground potential. Do not allow any grounded object to come into contact with the chassis while the line cord is plugged in. Also, be careful when working on the chassis out of its cabinet, to avoid shocks.

©John F. Rider, Publisher

©John F. Rider, Publisher

WIRING DIAGRAM FOR SILVERTONE CHASSIS 101.497

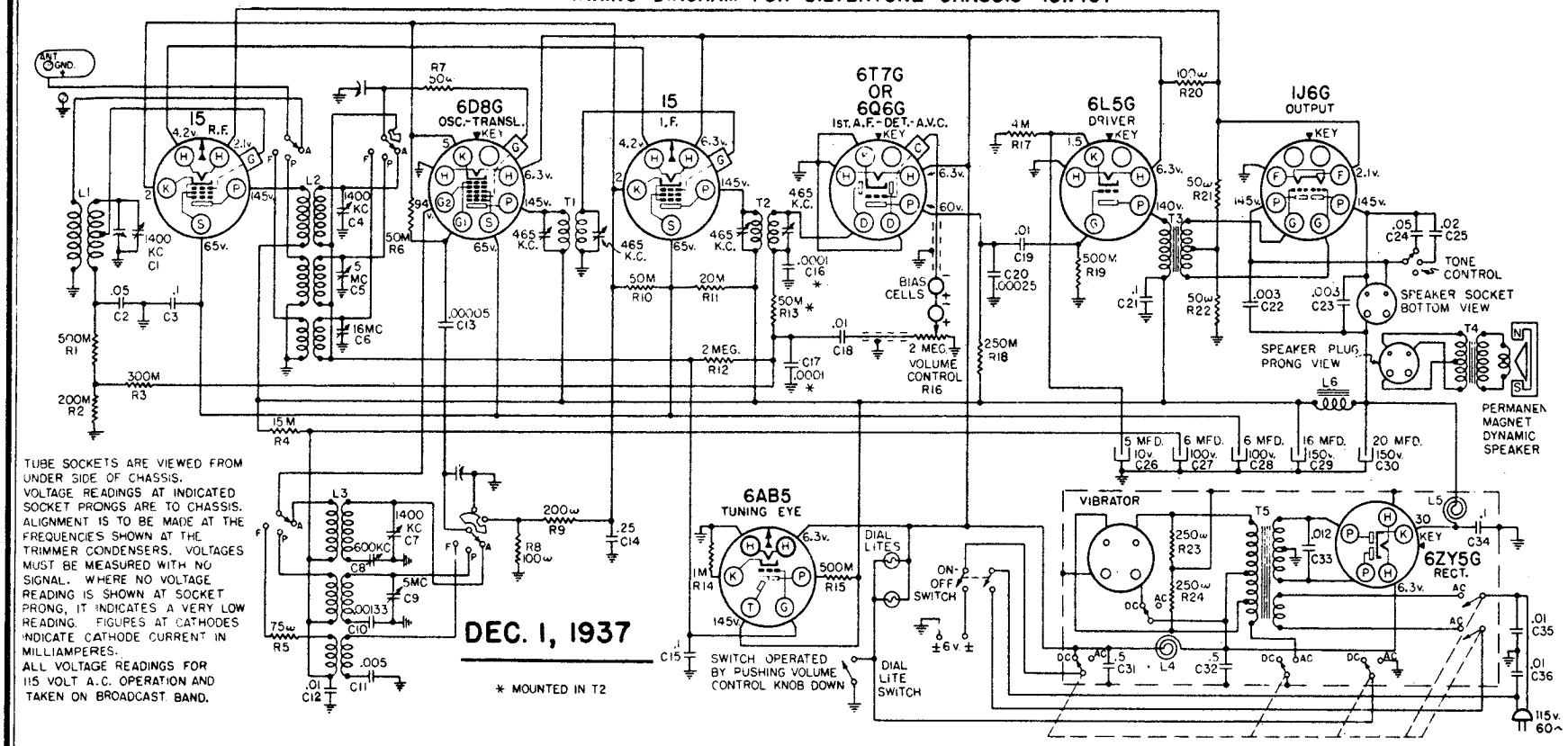

TUBE SOCKETS ARE VIEWED FROM UNDER SIDE OF CHASSIS.
VOLTAGE READINGS AT INDICATED SOCKET PRONGS ARE TO CHASSIS.
ALIGNMENT IS TO BE MADE AT THE FREQUENCIES SHOWN AT THE TRIMMER CONDENSERS. VOLTAGES MUST BE MEASURED WITH NO SIGNAL. WHERE NO VOLTAGE READING IS SHOWN AT SOCKET PRONG, IT INDICATES A VERY LOW READING. FIGURES AT CATHODES INDICATE CATHODE CURRENT IN MILLIAMPERES.
ALL VOLTAGE READINGS FOR 115 VOLT A.C. OPERATION AND TAKEN ON BROADCAST BAND.

DEC. 1, 1937

* MOUNTED IN T2

TUBE LAYOUT

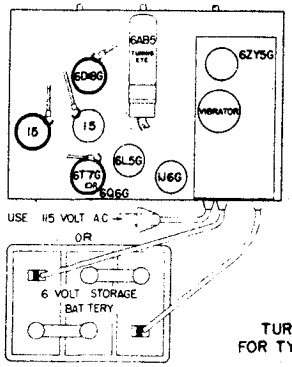

TURN TO PROPER INDICATION FOR TYPE OF POWER SUPPLY USED.

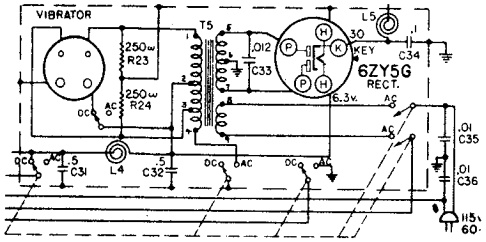

POWER TRANSFORMER COLOR CODE

1. White
2. Blue
3. Black
4. Red
5. Blue
6. Slate
7. Red
8. Black
9. Green

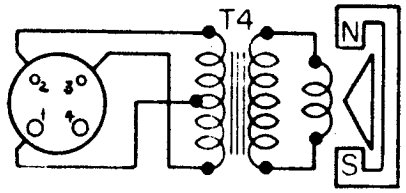

1. Red
3. Brown
3. Blue
4. Blank

SPEAKER PLUG PRONG VIEW

INTERMEDIATE FREQUENCY
465 kc.

POWER OUTPUT:
Type.....Class "B"
Undistorted.....1.5 watts on A.C.;
1.2 watts on D.C.
Maximum..... 2 watts on A.C.;
1.6 watts on D.C.

POWER SUPPLY:
Six volt storage battery Battery Drain..... 2.25 amperes
115V., 50-60 cycle, A.C.. .....30 watts

SEARS ROEBUCK & CO.

MODELS 4614,4651
Chassis 101.497
Schematic, Voltage
Socket, Transf. Data

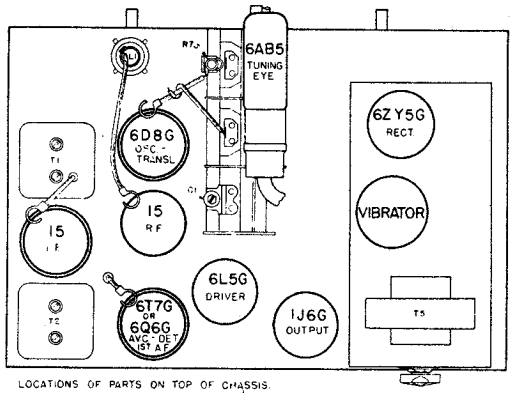

LOCATIONS OF PARTS ON TOP OF CHASSIS.

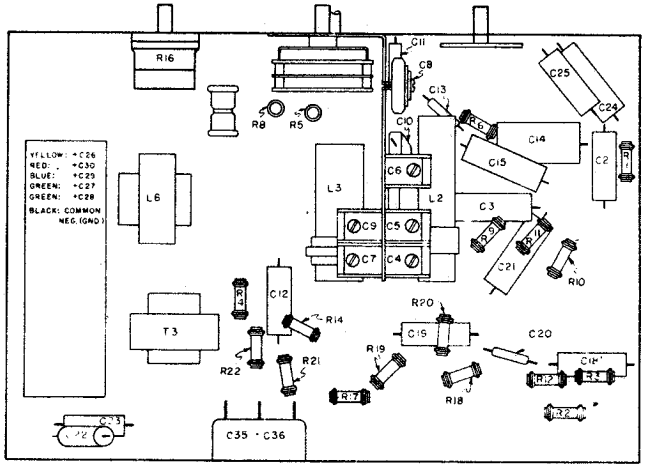

LOCATIONS OF PARTS UNDER CHASSIS.

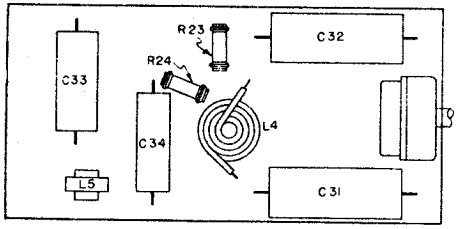

LOCATIONS OF PARTS UNDER POWER PACK.

FREQUENCY RANGES:

Band "A".....540-1800 kc.
Band "P".....1760-6300 kc.
Band "F".....5975-18,500 kc.

ALIGNMENT FREQUENCIES:

	Oscil. Trimmer	Ant.-Transl. Trimmer	Padder
Band "A"	1400 kc.	1400 kc.	600 kc
Band "P"	6 mc.	5 mc.	Fixed
Band "F"	-	16 mc.	Fixed

ALIGNMENT PROCEDURE

PRELIMINARY:

Output meter connection . . . . . Across speaker voice coil

Output meter reading to indicate 50 milliwatts . . . . . 0.38 volts

Generator ground lead connection . . . . . Receiver chassis

Dummy antenna value to be in series with generator output . . . . . See chart below

Connection of generator output lead . . . . . See chart below

Generator modulation . . . . . .30%, 400 cycles

Position of volume control . . . . . All the way on

Position of tone control . . . . . Fully clockwise

Position of dial pointer with variable fully closed . . . . To fall on end line at low frequency end of the AMERICAN scale.

WAVE BAND SWITCH POSITION	POSITION OF VARIABLE	GENERATOR FREQUENCY	DUMMY ANTENNA	GENERATOR CONNECTION	TRIMMERS ADJUSTED (IN ORDER SHOWN)	TRIMMER FUNCTION	APPROXIMATE MICROVOLTS
"P"	1.8 mc	465 kc	.1 mfd.	6D8G Grid	T3,T1	IF	--
"A"	1400 kc	1400 kc	.0002 mfd.	Ant. Term.	C7,C4,C1	Osc.-Transl. Antenna	8
"A"	600 kc (rock)	600 kc	.0002 mfd.	Ant. Term.	C8	Padder	15
"P"	6 mc	6 mc	400 ohms	Ant. Term.	C9	Osc.	15
"P"	6 mc	6 mc	400 ohms	Ant. Term.	C5	Transl.	15
"P"	2 mc	2 mc	400 ohms	Ant. Term.	-	-	45
"F"	16 mc (rock)	16 mc	400 ohms	Ant. Term.	C6	Translator	15
"F"	7 mc	7 mc	400 ohms	Ant. Term.	-	-	60

IMPORTANT ALIGNMENT NOTES

The variable should be rocked back and forth a degree or two while making the adjustment, where indicated by the word, "Rock", in the alignment chart.

The alignment procedure should be repeated in the original order, step by step, to insure greater accuracy.

Always keep the output power from the generator at its lowest possible value to prevent the AVC of the receiver from interfering with accurate alignment.

The sensitivities indicated are for 115 volt operation. For 6 volt operation, these figures should be multiplied by 1.8.

ELIMINATING WHISTLE AT 930 KC:

A whistle, due to a beat between the second harmonic (930 kc) of the 465 kc IF, and a 930 kc signal may be experienced. In localities where the 930 kc station is one that is frequently listened to, it will be desirable to shift the whistle to some other point where it will not be objectionable. This can be done by shifting the IF frequency of the receiver.

Determine at what point between 900 kc and 960 kc the whistle will be least objectionable. Dividing this frequency by two will give the new IF frequency to which the receiver should be aligned. For example, if it is determined that a whistle at 915 kc would not be objectionable, the IF should be realigned at 915/2 or 457.5 kc. Try to select the new IF frequency as close to 465 kc as possible.

©John F. Rider, Publisher

©John F. Rider, Publisher

WIRING DIAGRAM FOR SILVERTONE CHASSIS 101.478

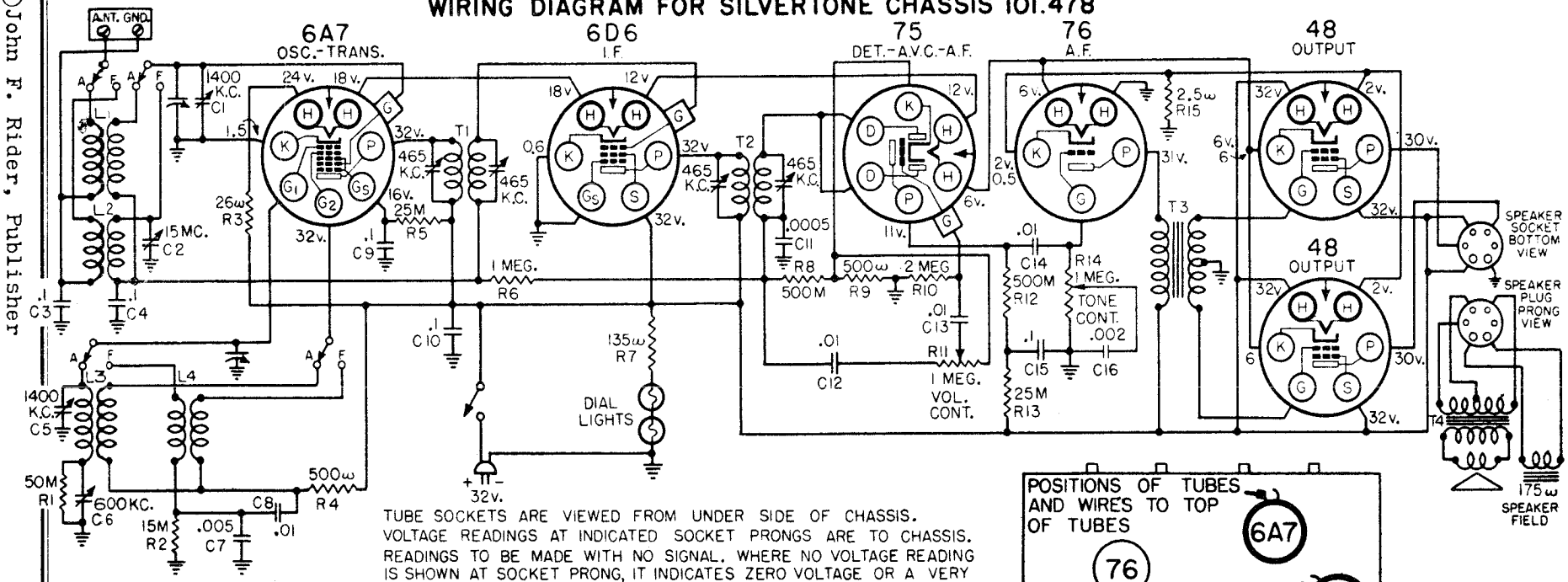

TUBE SOCKETS ARE VIEWED FROM UNDER SIDE OF CHASSIS.
VOLTAGE READINGS AT INDICATED SOCKET PRONGS ARE TO CHASSIS.
READINGS TO BE MADE WITH NO SIGNAL. WHERE NO VOLTAGE READING IS SHOWN AT SOCKET PRONG, IT INDICATES ZERO VOLTAGE OR A VERY LOW READING.
ALIGNMENT IS TO BE MADE AT THE FREQUENCIES SHOWN AT THE TRIMMER CONDENSERS.
FIGURES AT CATHODE ARE CATHODE CURRENT IN MILLIAMPERES.

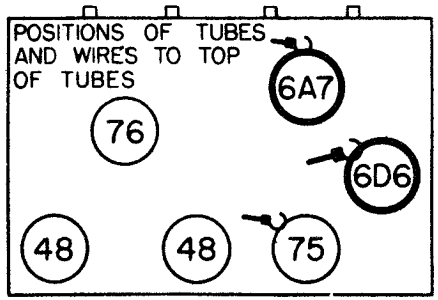

SPEAKER CABLE COLOR CODE

1. Black	4. Red
2. Yellow	5. Brown
3. Green	6. Blank

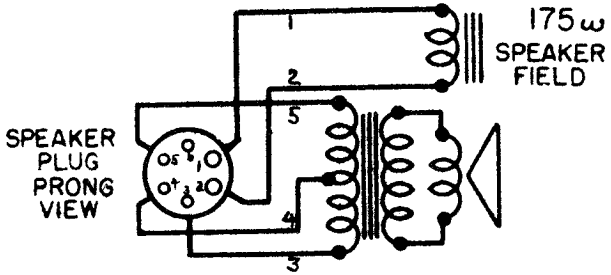

LOUD SPEAKER:

Type	Dynamic
Size	6"
Field Coil Resistance	175 ohms

POWER OUTPUT:

Type	Push-Pull
Undistorted	0.15 watts
Maximum	0.32 watts

POWER SUPPLY:

All models available . . . . . 32 Volts, DC; 46 Watts

FREQUENCY RANGES:

Band "A"	540-1750 kc
Band "F"	5475-16500 kc

ALIGNMENT FREQUENCIES:

	Ant.-Transl. Trimmer	Oscil. Trimmer	Oscil. Padder
Band "A"	1400 kc	1400 kc	600 kc
Band "F"	15 mc	-	Fixed

INTERMEDIATE FREQUENCY . . . . . 465 kc

SEPT. 1, 1937

SEARS ROEBUCK & CO.

MODEL 4619
Chassis 101•478
Schematic, Voltage
Socket, Specs • Speaker

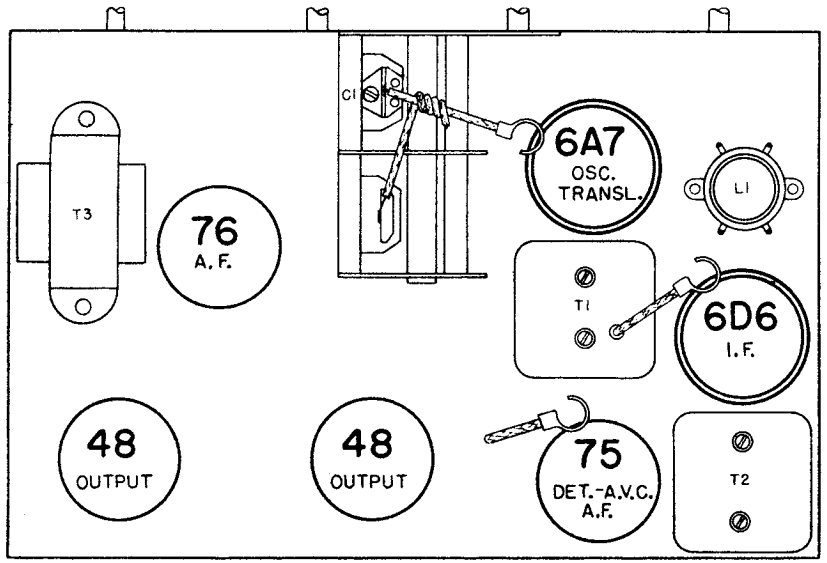

LOCATIONS OF PARTS ON TOP OF CHASSIS

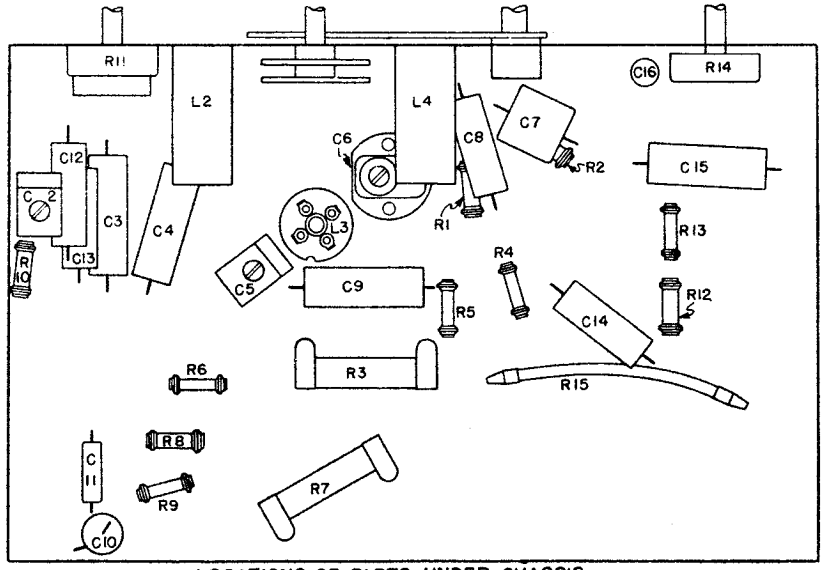

LOCATIONS OF PARTS UNDER CHASSIS.

ALIGNMENT PROCEDURE

PRELIMINARY

Output meter connection . . . . . Across speaker voice coil

Output meter reading to indicate 50 milliwatts output . . . . . 0.45 volts

Approximate average sensitivity in microvolts for 50 milliwatts output . . See chart below

Dummy antenna value to be in series with generator output . . . . . See chart below

Connection of generator output lead . . . . . See chart below

Generator ground lead connection . . . . . To receiver chassis

Generator modulation . . . . . 30%, 400 cycles

Position of volume control . . . . . Fully clockwise

Position of tone control . . . . . Fully clockwise

Position of dial pointer with condenser fully meshed . . To fall in center of small raised block which is about 1/4" to the left of the letters, "MC", which are at the low frequency end of the FOREIGN scale.

WAVE BAND SWITCH POSITION	POSITION OF VARIABLE	GENERATOR FREQUENCY	DUMMY ANTENNA	GENERATOR CONNECTION	TRIMMERS ADJUSTED (IN ORDER SHOWN)	TRIMMER FUNCTION	APPROXIMATE MICROVOLTS
"A"	550 kc	465 kc	.1 mfd.	6A7 Grid	T2,T1	IF	35
"A"	1400 kc	1400 kc	.0002 mfd.	Ant. Term.	C5,C1	Oscillator Translator	18
"A"	600 kc (rock)	600 kc	.0002 mfd.	Ant. Term.	C6	Padder	12
"P"	15 mc (rock)	15 mc	400 ohms	Ant. Term.	C2	Translator	20
"P"	6 mc	6 mc	400 ohms	Ant. Term.	-	-	60

IMPORTANT ALIGNMENT NOTES

Where indicated by the word, "Rock", the variable should be rocked back and forth a degree or two while making the adjustment.

The figures given in the "Microvolts" column are only approximate.

The alignment procedure should be repeated stage by stage, in the original order, for greatest accuracy. Always keep the output from the test oscillator at its lowest possible value to make the AVC action of the receiver ineffective.

ELIMINATING WHISTLE AT 930 KC:

A whistle, due to a beat between the second harmonic (930 kc) of the 465 kc IF, and a 930 kc signal may be experienced. In localities where the 930 kc station is one that is frequently listened to, it will be desirable to shift the whistle to some other point where it will not be objectionable. This can be done by shifting the IF frequency of the receiver.

Determine at what point between 900 kc and 960 kc the whistle will be least objectionable. Dividing this frequency by two will give the new IF frequency to which the receiver should be aligned. For example, if it is determined that a whistle at 915 kc would not be objectionable, the IF should be realigned at 915/2 or 457.5 kc. Try to select the new IF frequency as close as possible to 465 kc.

THE NOISE SUPPRESSION EQUIPMENT:

Two condensers and a suppressor are supplied for eliminating the electrical interference created by the gasoline engine that drives the 32 volt lighting plant generator.

In single cylinder installations, cut the high tension wire going to the spark plug and screw the suppressor onto the two ends of the wire. In multi-cylinder installations, cut the high tension wire going to the center terminal of the distributor cap and screw the suppressor onto the two ends of the wire.

Connect one of the condensers between the two generator brushes. Ground the generator frame. Connect the other condenser from the battery side of the ignition coil to ground.

©John F. Rider, Publisher

Schematic, Voltage Socket, Specs.

SEARS ROEBUCK & CO.

MODELS 4622, 4722
Chassis 100.179

SCHEMATIC FOR SILVERTONE CHASSIS 100.179

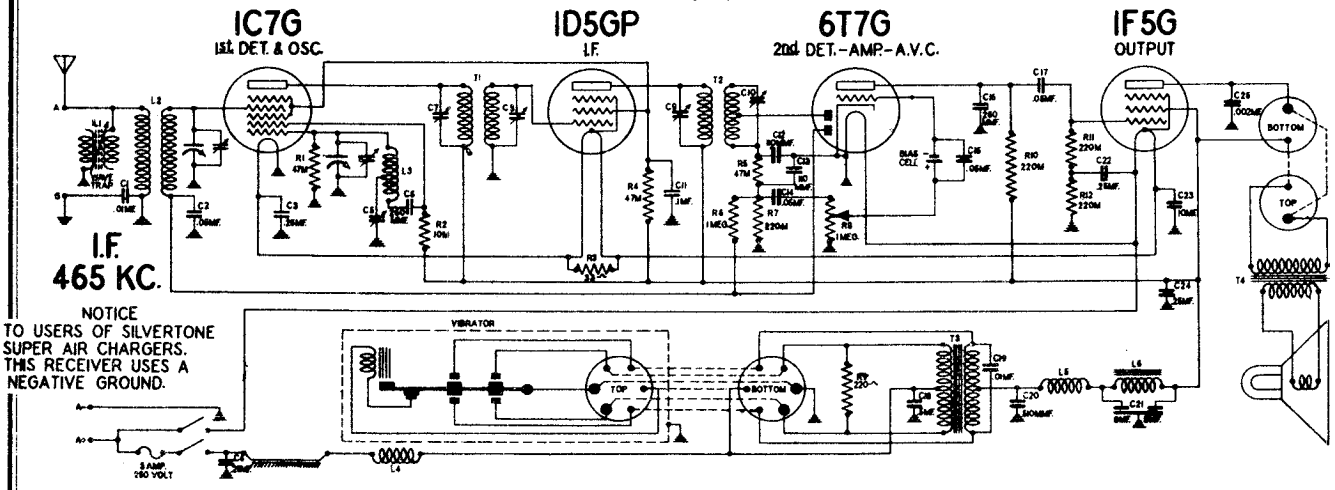

SOCKET VOLTAGES

OCTOBER 1, 1937

NEW BATTERIES — DIAL TUNED TO 530 KC.

BOTTOM VIEW OF CHASSIS

VOLTAGES MEASURED BETWEEN SOCKET TERMINALS AND CHASSIS
A BATTERY DRAIN: 1.12 AMPS.
B SUPPLY DRAIN: 17 MILS.

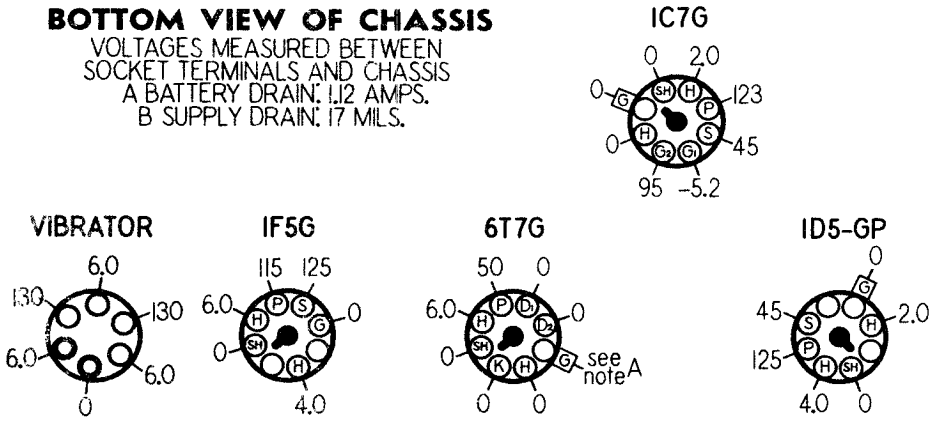

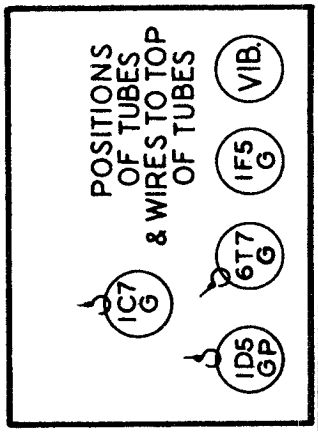

REAR OF CHASSIS

Use a high resistance voltmeter of 1,000 ohms per volt.

NOTE A: The bias for the control grid of the 6T7-G tube is -1.0 volt supplied by a bias cell. Due to the high resistance of the cell the voltmeter will indicate only a fraction of a volt.

IMPORTANT: The bias for the control grid of the 1D5-GP tube is -2.0 volts measured across the filament of the 1C7-G tube. The bias for the control grid of the 1F5-G tube is -4.0 volts measured from the low side of the 1F5-G tube filament to ground.

POWER SUPPLY
All models available. .....6 volt - 1.12 amp.
"B" supply vibrator.. Synchronous; plug-in type

FREQUENCY RANGE
530 to 1740 KC.

ALIGNMENT FREQUENCY
1500 KC.; 600 KC.

INTERMEDIATE FREQUENCY .....465 KC.

POWER OUTPUT
Type.....Pentode
Undistorted.....0.3 Watts
Maximum.....0.55 Watts

LOUD SPEAKER
Type.....Perm. Magnet Dynamic
Size.....6"

©John F. Rider, Publisher

MODELS 4622,4722
Chassis 100,179
Socket,Trimmers
Chassis,Alignment

SEARS ROEBUCK & CO.

ALIGNMENT PROCEDURE

PRELIMINARY

Output meter connections.....Across voice coil leads

Output meter reading to indicate 0.05 watt output.....0.65 volts

Average sensitivity in microvolts for 0.05 watt output.....See chart below

Generator ground connection.....Receiver Chassis

Dummy antenna to be in series with generator output.....See chart below

Connection of generator output lead.....See chart below

Generator modulation.....30%, 400 cycles

Position of volume control.....Maximum clockwise

ORDER OF ALIGN.	* DIAL POINTER POSITION	SIGNAL GENERATOR FREQUENCY	DUMMY ANTENNA	SIGNAL GENERATOR CONNECTION	TRIMMER NUMBER	SENSITIVITY (MICROVOLTS)
A	ANY POINT WHICH DOES NOT AFFECT SIGNAL	465 KC.	.1 MFD.	1C7-G CONTROL GRID	C7, C8 C9, C10	150
B	ANY POINT WHICH DOES NOT AFFECT SIGNAL	465 KC.	250 MMFD.	ANTENNA TERMINAL	1 MINIMUM OUTPUT	
C	1500 KC.	1500 KC.	250 MMFD.	ANTENNA TERMINAL	2, 3	35
D	** TUNE TO 600 KC. GEN.SIG.	600 KC.	250 MMFD.	ANTENNA TERMINAL	C5	20

IMPORTANT ALIGNMENT NOTES

* Before attempting to align the receiver check to see that the dial pointer is in a horizontal position at the low frequency end of the dial scale when the gang condenser is in full mesh.

After adjusting the I.F. trimmers C7, C8, C9 and C10, go back and repeat the adjustment, since the setting of each trimmer will have some effect on others. When adjusting L1, antenna trap trimmer, increase generator output to obtain clearly defined trimmer setting for a minimum.

** When aligning the broadcast band padder C5 at 600 KC. it is necessary to adjust the trimmer while slowly rocking the gang condenser through a small distance. Rocking the gang is essential if maximum sensitivity is to be obtained.

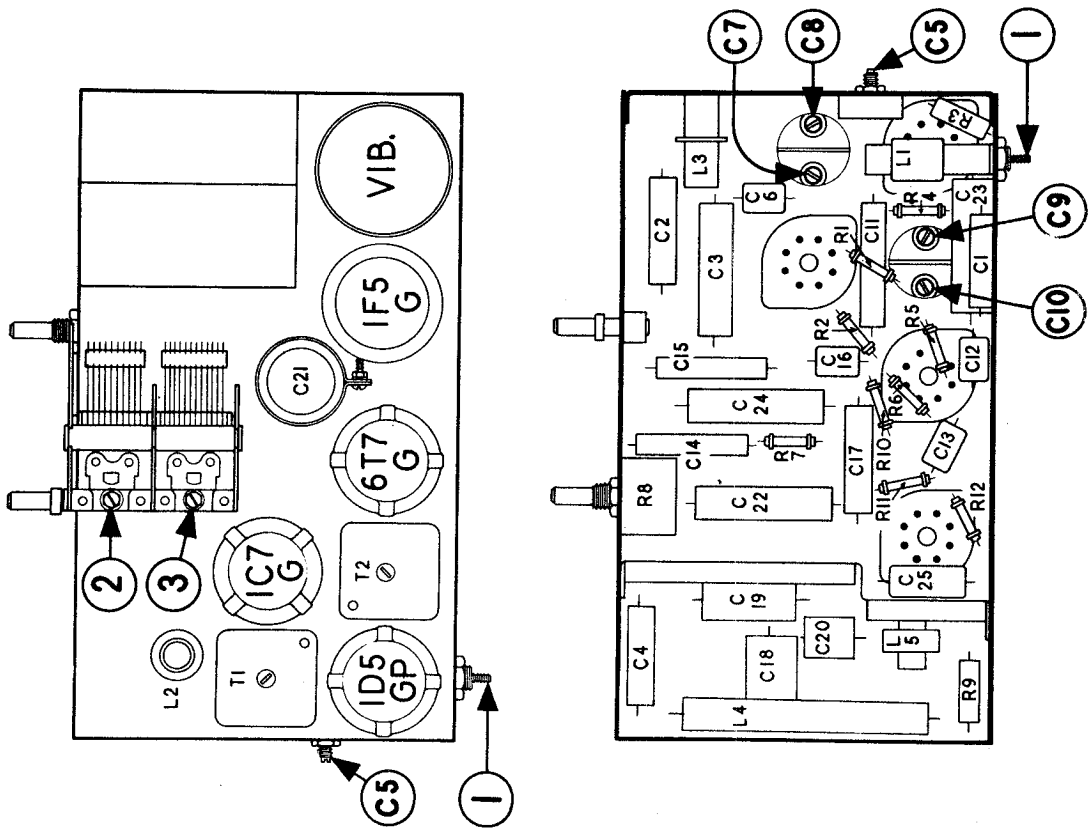

©John F. Rider, Publisher

©John F. Rider, Publisher

WIRING DIAGRAM FOR SILVERTONE CHASSIS 100.157

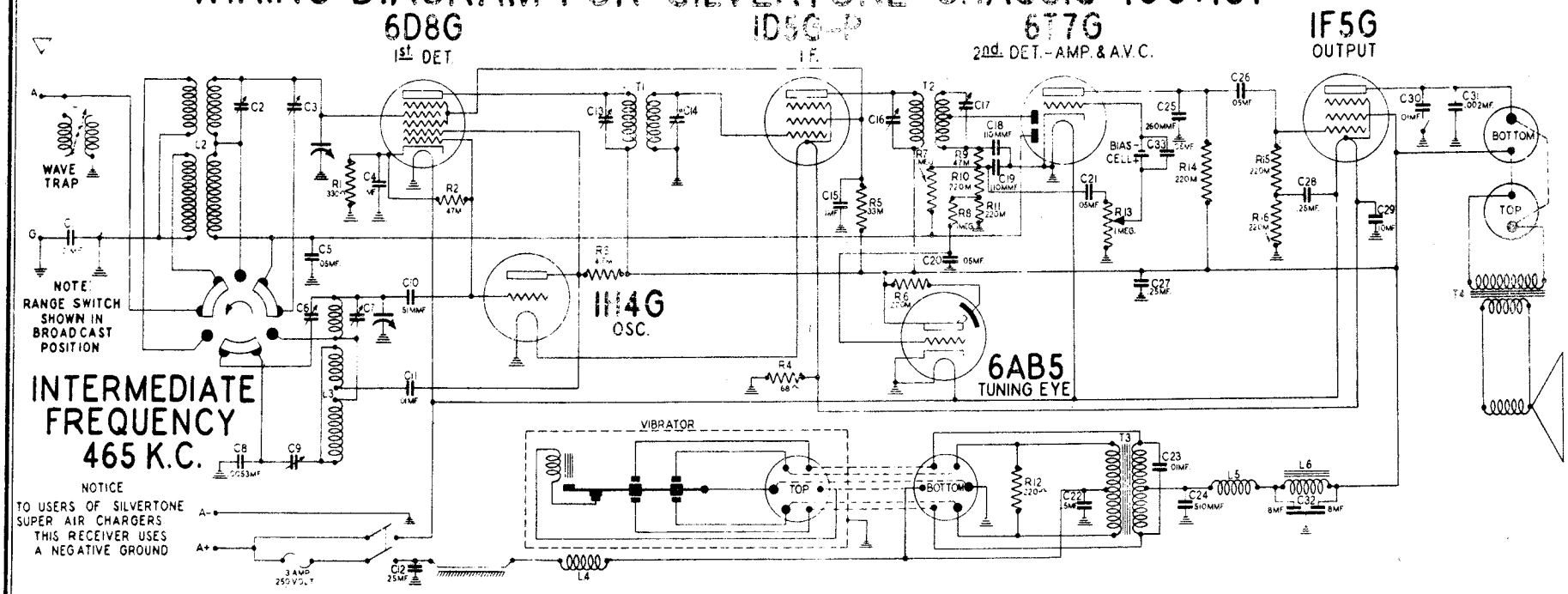

SOCKET VOLTAGES

BATTERY VOLTAGE 6.0 — DIAL TUNED TO 540 KC

BOTTOM VIEW OF CHASSIS
VOLTAGES MEASURED BETWEEN SOCKET TERMINALS AND CHASSIS
A BATTERY DRAIN 1.5 AMPS.
B SUPPLY DRAIN 23 MILS.

TUNING EYE VOLTAGES MEASURED AT CHASSIS END OF CABLE.

RED	115
GREEN-WHITE	0
BLUE	6.0
BLACK	0

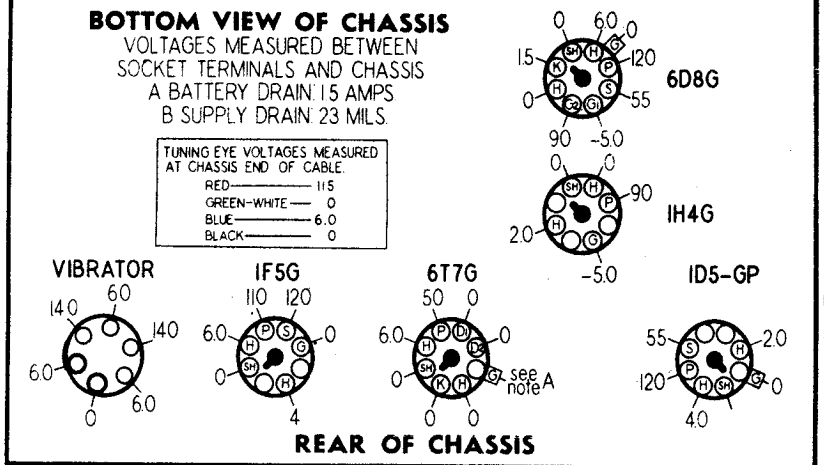

OCT. 25, 1937

USE A HIGH RESISTANCE VOLTMETER OF 1000 OHMS PER VOLT.

NOTE A:- THE BIAS FOR THE CONTROL GRID OF THE 6T7-G TUBE IS -1.0 VOLT SUPPLIED BY THE BIAS CELL. DUE TO THE HIGH RESISTANCE OF THE CELL THE VOLTMETER WILL ONLY INDICATE ONLY A FRACTION OF A VOLT.

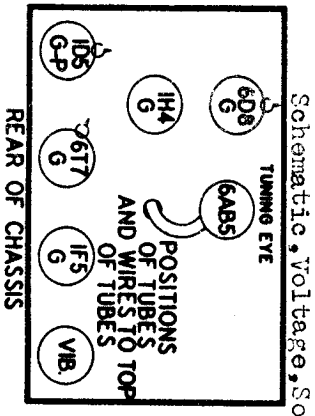

SEARS ROEBUCK & CO. MODELS 4623, 4643, 4743
4613, 4723
Chassis 100.157
Schematic, Voltage, Socket

PRELIMINARY

ALIGNMENT PROCEDURE

Output meter connections.....Across voice coil leads
Output meter reading to indicate 0.05 watt output.....0.65 volts
Average sensitivity in microvolts for 0.05 watt output.....See chart below

Generator ground connection.....Receiver Chassis
Dummy antenna to be in series with generator output.....See chart below
Connection of generator output lead.....See chart below
Generator modulation.....30%, 400 cycles

Position of volume control.....Maximum clockwise
Position of tone control.....Right hand (clockwise) position

ORDER OF ALIGN.	* DIAL POINTER POSITION	SIGNAL GENERATOR FREQUENCY	DUMMY ANTENNA	SIGNAL GENERATOR CONNECTION	TRIMMER NUMBER	SENSITIVITY (MICROVOLTS)	BAND SWITCH POSITION
A	ANY POINT WHICH DOES NOT AFFECT SIGNAL	465 KC.	.1 MFD.	6D8G CONTROL GRID	C13,C14 C16,C17	150	BAND A (Counter-clock-wise)
B	ANY POINT WHICH DOES NOT AFFECT SIGNAL	465 KC.	250 MMFD.	ANTENNA TERMINAL	1 MINIMUM OUTPUT		BAND A (Counter-clock-wise)
C	1500 KC.	1500 KC.	250 MMFD.	ANTENNA TERMINAL	C6, C3	30	BAND A (Counter-clock-wise)
D	** TUNE TO 600 KC. GEN.SIG.	600 KC.	250 MMFD.	ANTENNA TERMINAL	C9	20	BAND A (Counter-clock-wise)
E	** *** 16 MC.	16 MC.	400 OHM.	ANTENNA TERMINAL	C7, C2	65	BAND F (Clock-wise)

IMPORTANT ALIGNMENT NOTES

* Before attempting to align the receiver check to see that the dial pointer is in a horizontal position at the low frequency end of the dial when the gang condenser is in full mesh.

After adjusting the I.F. trimmers C13, C14, C16 and C17, go back and repeat the adjustment, since the setting of each trimmer will have some effect on others. When adjusting L1, antenna trap trimmer, increase generator output to obtain clearly defined trimmer setting for a minimum.

** When aligning the broadcast band padder C9 at 600 KC. and the short wave detector trimmer C2, it is necessary to adjust the trimmers while slowly rocking the gang condenser through a small distance. Rocking the gang is essential if maximum sensitivity is to be obtained.

*** When aligning the short wave bands, care should be taken in adjusting trimmer C7, since two possible adjustments of this trimmer will result in signal peaks. The proper peak is that which occurs with the trimmer screw farthest out.

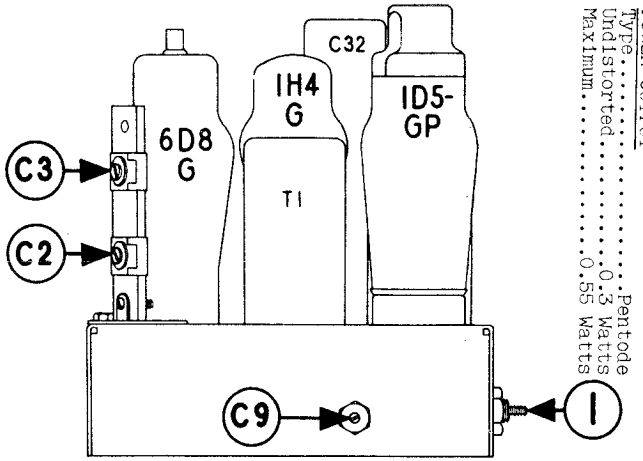

LOUD SPEAKER
Type.....Perm. Magnet. Dynamic
Size.....6" or 8"

FREQUENCY RANGES
Band A.....535 to 1750 KC.
Band F.....5700 to 18,200 KC.

POWER OUTPUT
Type.....Pentode
Undistorted.....0.3 Watts
Maximum.....0.55 Watts

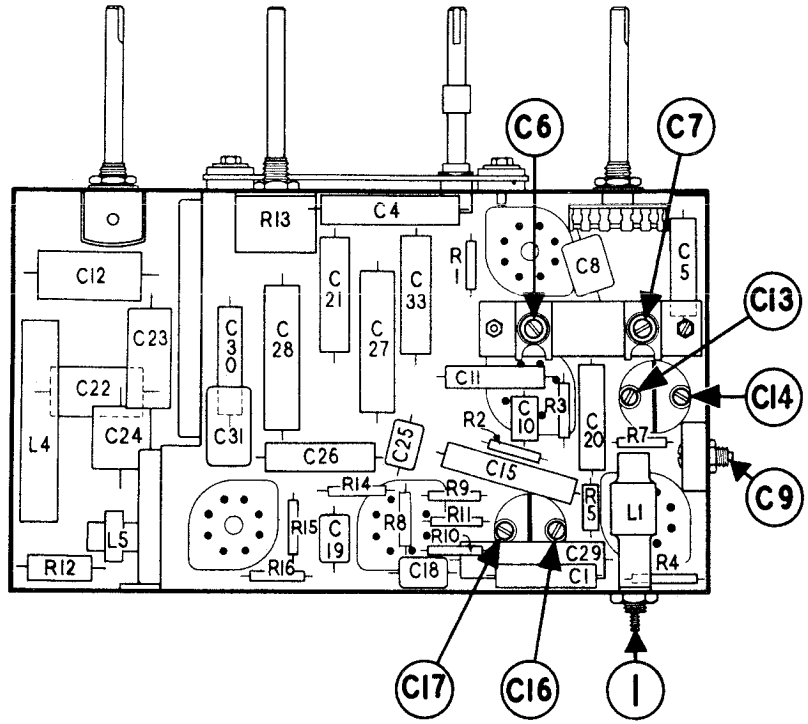

©John F. Rider, Publisher

SEARS-ROEBUCK & CO.

MODELS 4640,4650,4740,4750
Chassis 101.476
Schematic,Voltage,Socket
Specs.,Transf. Speaker

AUGUST 13, 1937

WIRING DIAGRAM FOR SILVERTONE CHASSIS 101.476

POWER SUPPLY:
Six volt storage battery Battery drain . . . . . 1.35 amperes

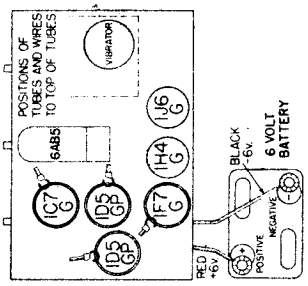

ALIGNMENT FREQUENCIES:

	Oscil. Trimmer	Ant.-Transl. Trimmer	Padder
Band "A"	1400 kc	1400 kc	600 kc
Band "P"	5 mc	5 mc	Fixed
Band "F"	-	15 mc	Fixed

FREQUENCY RANGES:

Band "A" . . . 540-1760 kc
Band "P" . . . 1760-6200 kc
Band "F" . . 5975-18,500 kc

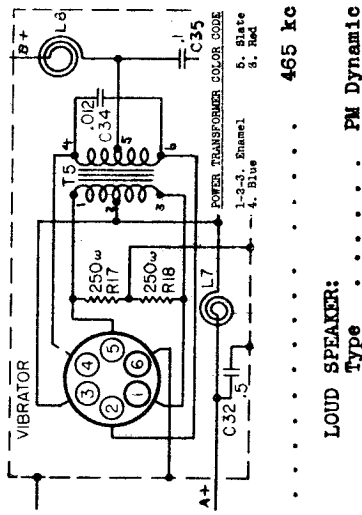

INTERMEDIATE FREQUENCY . . . . . 465 kc

POWER OUTPUT:

	Class "B"	LOUD SPEAKER:	PM Dynamic
Type		Type	
Undistorted	1.2 watts	Size	6" and 8"
Maximum	1.6 watts		

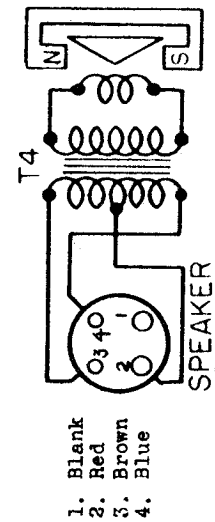

TUBE SOCKETS ARE VIEWED FROM UNDER SIDE OF CHASSIS.
VOLTAGE READINGS AT INDICATED SOCKET PRONGS ARE TO CHASSIS.
ALIGNMENT IS TO BE MADE AT THE FREQUENCIES SHOWN AT THE TRIMMER CONDENSERS. VOLTAGES MUST BE MEASURED WITH NO SIGNAL. WHERE NO VOLTAGE READING IS SHOWN AT SOCKET PRONG, IT INDICATES A VERY LOW READING.
FIGURES AT CATHODES INDICATE CATHODE CURRENT IN MILLIAMPERES.
* - PART OF T2

TO USERS OF THE SILVERTONE SUPER AIR-CHARGERS: THIS RECEIVER USES A NEGATIVE GROUND.

©John F. Rider, Publisher

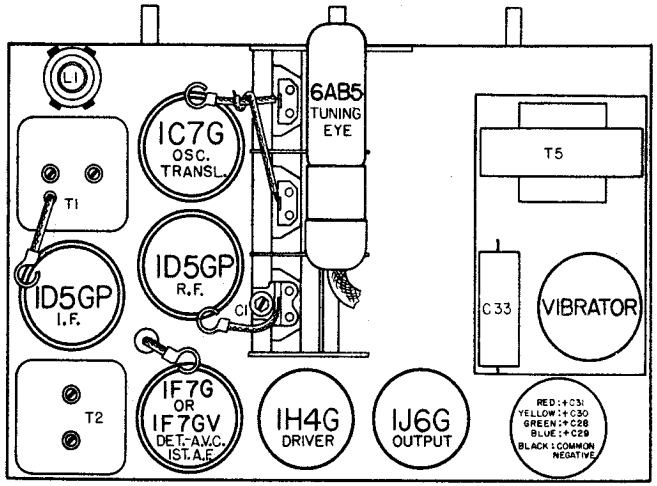

LOCATIONS OF PARTS ON TOP OF CHASSIS

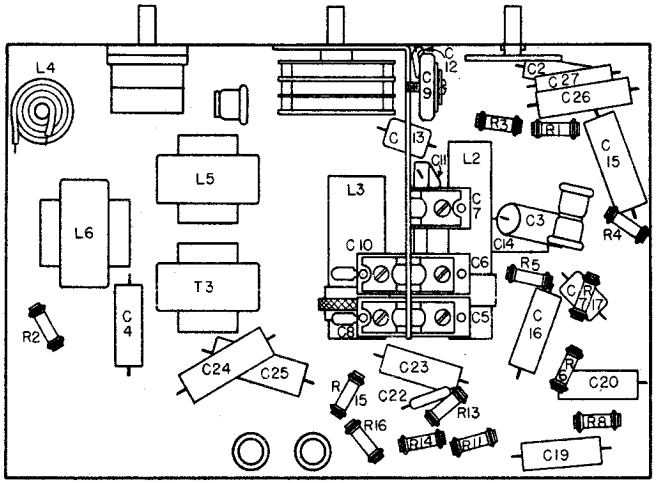

LOCATIONS OF PARTS UNDER CHASSIS

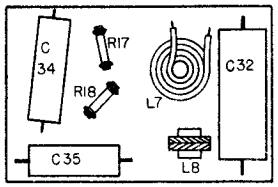

LOCATION OF PARTS UNDER POWER SUPPLY UNIT

ALIGNMENT PROCEDURE

PRELIMINARY:

Output meter connection . . . . . Across speaker voice coil

Output meter reading to indicate 50 milliwatts . . . . . 0.39 volts

Generator ground lead connection . . . . . Receiver chassis

Dummy antenna value to be in series with generator output . . . . . See chart below

Connection of generator output lead . . . . . See chart below

Generator modulation . . . . . 30%, 400 cycles

Position of volume control . . . . . All the way on

Position of tone control . . . . . Fully clockwise

Position of dial pointer with variable fully closed . . . . To fall on end line at low frequency end of the AMERICAN scale.

WAVE BAND SWITCH POSITION	POSITION OF VARIABLE	GENERATOR FREQUENCY	DUMMY ANTENNA	GENERATOR CONNECTION	TRIMMERS ADJUSTED (IN ORDER SHOWN)	TRIMMER FUNCTION	APPROXIMATE MICROVOLTS
"P"	1.8 mc	465 kc	.1 mfd.	1C7G Grid	T2,T1	IF	75
"A"	1400 kc	1400 kc	.0002 mfd.	Ant. Term.	C8,C5, C1	Osc.-Transl. Antenna	15
"A"	600 kc (rock)	600 kc	.0002 mfd.	Ant. Term.	C9	Padder	15
"P"	5 mc	5 mc	400 ohms	Ant. Term.	C10,C6	Osc.-Transl.	55
"P"	1.8 mc	1.8 mc	400 ohms	Ant. Term.	-	-	125
"F"	15 mc (rock)	15 mc	400 ohms	Ant. Term.	C7	Translator	85
"F"	6 mc	6 mc	400 ohms	Ant. Term.	-	-	300

IMPORTANT ALIGNMENT NOTES

The variable should be rocked back and forth a degree or two while making the adjustment, where indicated by the word, "Rock", in the alignment chart.

The alignment procedure should be repeated in the original order, step by step, to insure greater accuracy.

Always keep the output power from the generator at its lowest possible value to prevent the AVC of the receiver from interfering with accurate alignment.

GENERAL INFORMATION

ELIMINATING WHISTLE AT 930 KC:

A whistle, due to a beat between the second harmonic (930 kc) of the 465 kc IF, and a 930 kc signal may be experienced. In localities where the 930 kc station is one that is frequently listened to, it will be desirable to shift the whistle to some other point where it will not be objectionable. This can be done by shifting the IF frequency of the receiver.

Determine at what point between 900 kc and 960 kc the whistle will be least objectionable. Dividing this frequency by two will give the new IF frequency to which the receiver should be aligned. For example, if it is determined that a whistle at 915 kc would not be objectionable, the IF should be realigned at 915/2 or 457.5 kc. Try to select the new IF frequency as close to 465 kc as possible.

Align the IF at the new frequency and then realign the rest of the receiver as described under, "ALIGNMENT PROCEDURE".

SILVERTONE BATTERY CHARGERS AVAILABLE:

The customer should be told about the SILVERTONE GAS-O-POWER and the SILVERTONE SUPER AIR-CHARGER. Either of these units provides an economical means of keeping the storage battery charged.

©John F. Rider, Publisher

Schematic, Voltage
Phono. Installation

SEARS ROEBUCK & CO.

MODELS 4664, 4764, 4784
Chassis 101.480

WIRING DIAGRAM FOR SILVERTONE CHASSIS 101.480

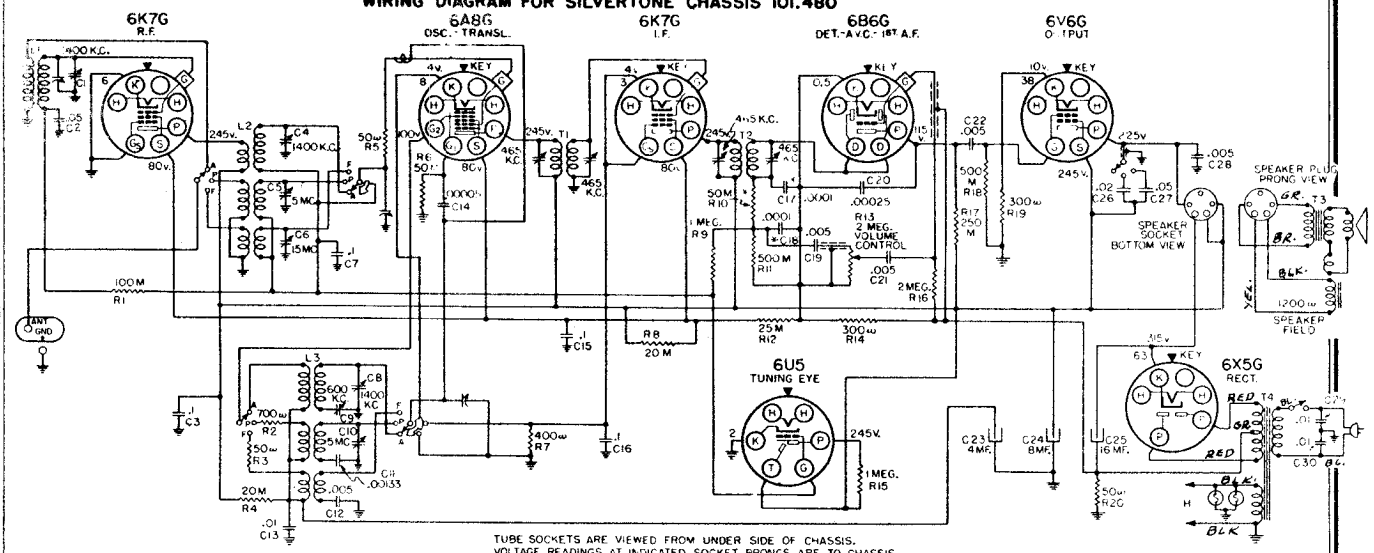

TUBE SOCKETS ARE VIEWED FROM UNDER SIDE OF CHASSIS.
VOLTAGE READINGS AT INDICATED SOCKET PRONGS ARE TO CHASSIS.
ALIGNMENT IS TO BE MADE AT THE FREQUENCIES SHOWN AT THE TRIMMER CONDENSERS. VOLTAGES MUST BE MEASURED WITH NO SIGNAL.
WHERE NO VOLTAGE READING IS SHOWN AT SOCKET PRONG, IT INDICATES ZERO VOLTAGE OR A VERY LOW READING.
FIGURES AT CATHODES ARE CATHODE CURRENT IN MILLIAMPERES.
* - PART OF T2

INTERMEDIATE FREQUENCY
465 kc

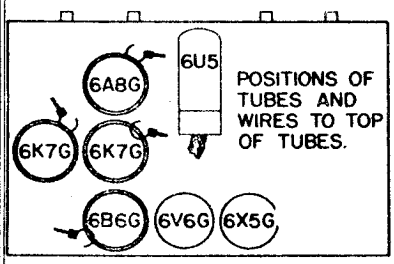

POSITIONS OF TUBES AND WIRES TO TOP OF TUBES.

POWER SUPPLY:

All models available 105-125 volts, 50-60 cycle, 50 watts
All models available . 105-125 volts, 25 cycle, 55 watts

POWER OUTPUT:

Type . . . . . Single Pentode (Beam)
Undistorted . . . . . 2 watts
Maximum . . . . . 3.3 watts

SEPT. 3, 1937

INSTALLING PHONOGRAPH PICK-UP OR EARPHONE JACK:

CHASSIS 101.480

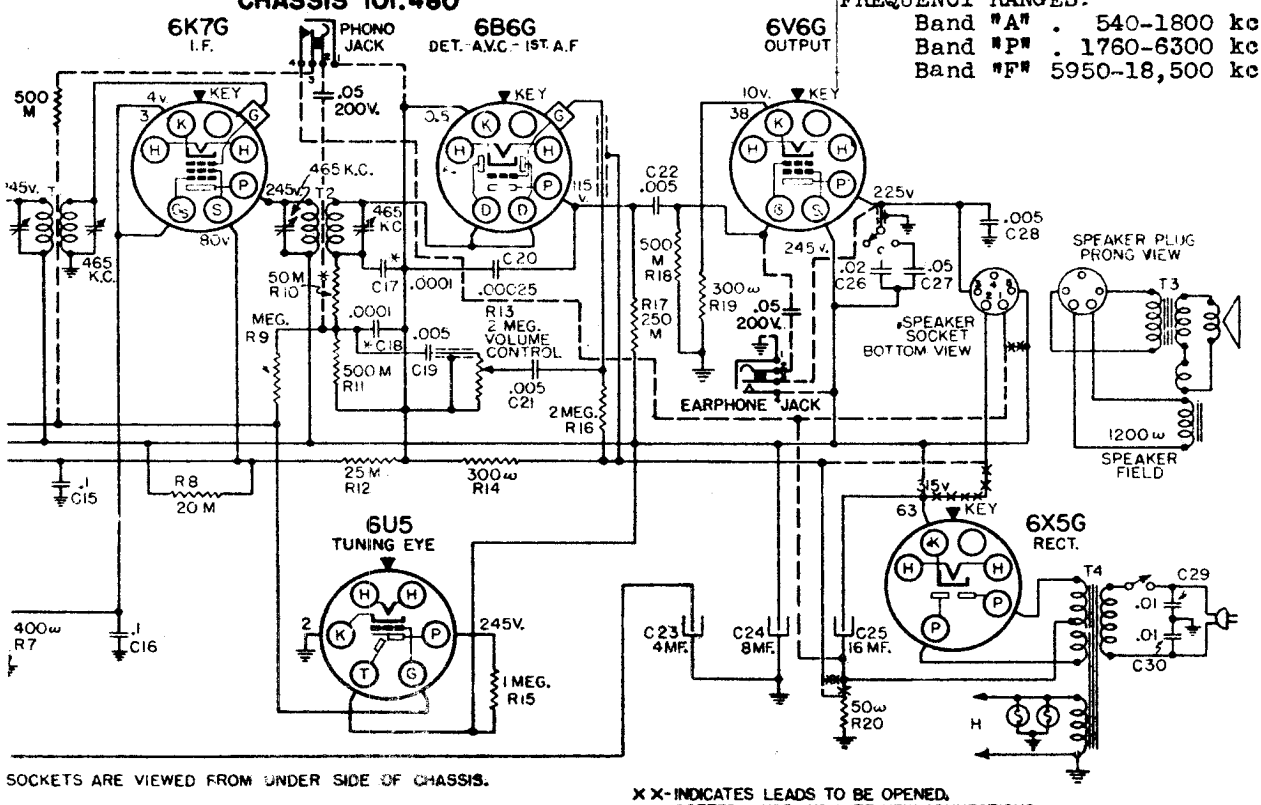

FREQUENCY RANGES:
Band "A" . 540-1800 kc
Band "P" . 1760-6300 kc
Band "F" 5950-18,500 kc

SOCKETS ARE VIEWED FROM UNDER SIDE OF CHASSIS.

XX-INDICATES LEADS TO BE OPENED.
DOTTED LINES INDICATE NEW CONNECTIONS.

©John F. Rider, Publisher

MODELS 4664,4764,4784
Chassis 101.480
Socket,Trimmers,Chassis
Phono. Notes,Alignment

SEARS-ROEBUCK & CO.

ELIMINATING WHISTLE AT 930 KC:

A whistle, due to a beat between the second harmonic (930 kc) of the 465 kc IF, and a 930 kc signal may be experienced. In localities where the 930 kc station is one that is frequently listened to, it will be desirable to shift the whistle to some other point where it will not be objectionable. This can be done by shifting the IF frequency of the receiver.

Determine at what point between 900 kc and 960 kc the whistle will be least objectionable. Dividing this frequency by two will give the new IF frequency to which the receiver should be aligned. For example, if it is determined that a whistle at 915 kc would not be objectionable, the IF should be realigned at 915/2 or 457.5 kc. Try to select the new IF frequency as close as possible to 465 kc.

LOCATIONS OF PARTS ON TOP OF CHASSIS.

LOCATIONS OF PARTS UNDER CHASSIS.

PHONOGRAPH PICK-UP JACK: A hole, covered with a brass insert, is provided in the back of the chassis. Remove the brass insert the mount the jack in this hole. Insulate the jack from the chassis by means of the two insulating washers supplied in the kit. The Schematic Section shows the connections to the jack. In addition, changes must be made in the wiring to the speaker socket and the electrolytic condenser. As the Schematic Section shows, these wiring changes and the connections to the jack are as follows:

Disconnect the jumper between prongs 1 and 5 of the speaker socket.

Disconnect the jumper between prong #3 of the speaker socket and the anode (center terminal) of the wet electrolytic.

There is a lead running from the 40 ohm resistor, mounted on the terminal board near the power transformer, to the cathode (can terminal)of the wet electrolytic. Disconnect this lead from the electrolytic and connect it to terminal #3 of the speaker socket.

Run a lead from terminal #1 of the speaker socket to the cathode (can terminal) of the electrolytic.

Run a lead from terminal #1 of the jack to the cathode prong of the 6B6G tube.

Connect the .05 condenser from terminal #3 of the jack to the junction of R10 and C19. This junction is at the end lug of the terminal board mounted under the IF output transformer.

Connect the 500M ohm resistor from terminal #3 of the jack to the end of R14 that is connected to the blank prong of the 6B6G socket.

Connect prong #4 of the jack to prong #1 of the speaker socket.

The radio Volume Control and Tone Control will operate for the phonograph pick-up.

EARPHONE JACK: Mount the jack in the hole in the back of the chassis. The jack frame must be grounded to the chassis. Therefore, do not use the insulating washers.

Connect the .05 condenser from terminal #2 of the jack to the grid prong of the 6V6G output tube.

Connect terminal #3 of the jack to terminal #3 of the speaker socket.

Connect terminal #4 of the jack to terminal #5 of the speaker socket.

This is the only wiring necessary. The wiring changes mentioned above for connection of the phonograph pick-up jack are not to be done if only an earphone jack is used.

With the connections as described, the loud speaker will not operate when the earphones are plugged in. If it is desired to have the loud speaker operate at the same time the earphones are plugged in, the connections to terminals 3 and 4 of the jack should be omitted.

PRELIMINARY: ALIGNMENT PROCEDURE

Output meter connections	Across voice coil leads
Output meter reading to indicate .5 watts output	1.04 volts
Average sensitivity in microvolts for .5 watts output	See chart below
Dummy antenna value to be in series with generator output	See chart below
Connection of generator output lead	See chart below
Connection of generator ground lead	To chassis
Generator modulation	30%, 400 cycles
Position of volume control	Fully clockwise
Position of tone control	Fully clockwise
Position of dial pointer with variable fully meshed	To fall along horizontal line of the dial.

WAVE BAND SWITCH POSITION	POSITION OF VARIABLE	GENERATOR FREQUENCY	DUMMY ANTENNA	GENERATOR CONNECTION	TRIMMERS ADJUSTED (IN ORDER SHOWN)	TRIMMER FUNCTION	APPROXIMATE MICROVOLTS
"P"	1.8 mc	465 kc	.1 mfd.	6A8G Grid	T2,T1	IF	80
"A"	1400 kc	1400 kc	.0002 mfd.	Ant. Term.	C8,C4,C1	Osc1.-Transl.-Ant.	30
"A"	600 kc (rock)	600 kc	.0003 mfd.	Ant. Term.	C9	Padder	60
"P"	5 mc	5 mc	400 ohms	Ant. Term.	C10	Oscillator	-
"P"	5 mc (rock)	5 mc	400 ohms	Ant. Term.	C5	Translator	45
"P"	15 mc (rock)	15 mc	400 ohms	Ant. Term.	C6	Translator	60

IMPORTANT ALIGNMENT NOTES

Where indicated by the word, "Rock", the variable should be rocked back and forth a degree or two while making the adjustment.

It is advisable to repeat the entire alignment procedure band by band and in the original order to insure greater accuracy.

Always keep the output from the test oscillator at its lowest possible value. As the sensitivity is increased by alignment, the generator output should be reduced correspondingly.

Values shown under, "Microvolts", are only approximate.

©John F. Rider, Publisher

©John F. Rider, Publisher

WIRING DIAGRAM FOR SILVERTONE CHASSIS 101.482

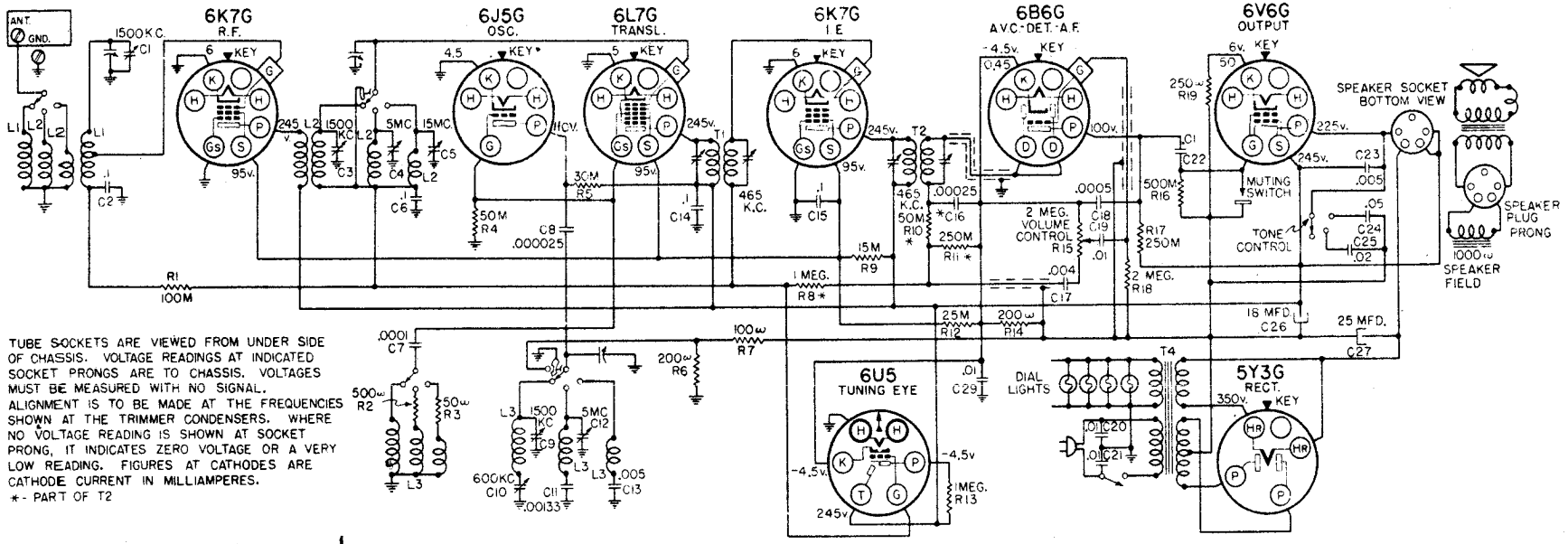

TUBE SOCKETS ARE VIEWED FROM UNDER SIDE OF CHASSIS. VOLTAGE READINGS AT INDICATED SOCKET PRONGS ARE TO CHASSIS. VOLTAGES MUST BE MEASURED WITH NO SIGNAL. ALIGNMENT IS TO BE MADE AT THE FREQUENCIES SHOWN AT THE TRIMMER CONDENSERS. WHERE NO VOLTAGE READING IS SHOWN AT SOCKET PRONG, IT INDICATES ZERO VOLTAGE OR A VERY LOW READING. FIGURES AT CATHODES ARE CATHODE CURRENT IN MILLIAMPERES.
*- PART OF T2

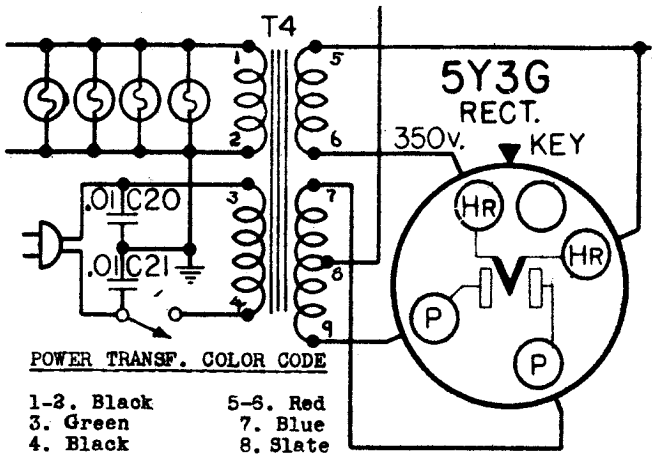

POWER TRANSF. COLOR CODE

1-2. Black	5-6. Red
3. Green	7. Blue
4. Black	8. Slate
9. Red	

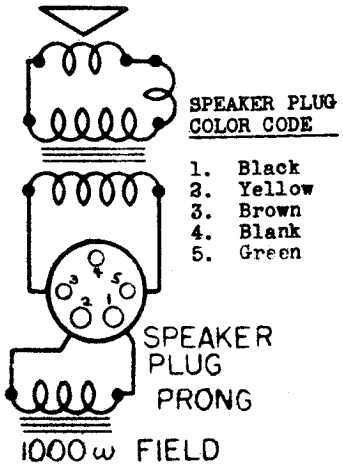

SPEAKER PLUG COLOR CODE

1. Black
2. Yellow
3. Brown
4. Blank
5. Green

TUBE LAYOUT

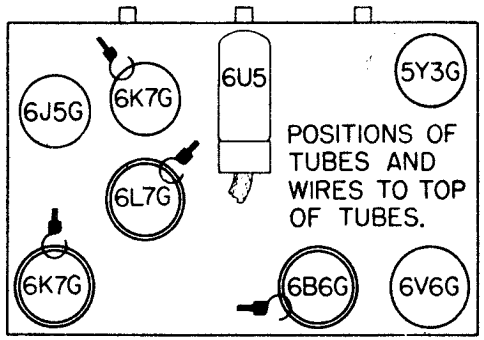

POWER SUPPLY:

All models available	105-125 volts, 50-60 cycle, 75 watts
All models available	105-125 volts, 25 cycle, 75 watts

FREQUENCY RANGES:

Band "A"	540-1840 kc
Band "P"	1780-6050 kc
Band "F"	5.9-18.5 mc

ALIGNMENT FREQUENCIES:

	Oscil. Trimmer	Ant-Transl. Trimmer	Padder
Band "A"	1500 kc	1500 kc	600 kc
Band "P"	5 mc	5 mc	Fixed
Band "F"	16 mc	16 mc	Fixed

POWER OUTPUT:

Type	Beam tube
Undistorted	3 watts
Maximum	6 watts

INTERMEDIATE FREQUENCY . . . 465 kc

SEPTEMBER 28, 1937

SEARS ROEBUCK & CO.

MODELS 4610, 4669, 4769
4789 Chassis 101.482
Schematic, Voltage
Socket, Specs. Transf.

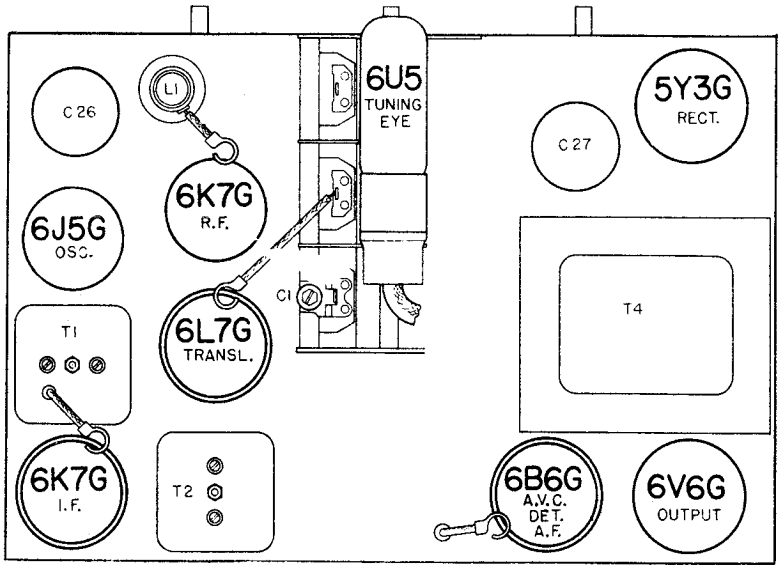

LOCATION OF PARTS TOP OF CHASSIS

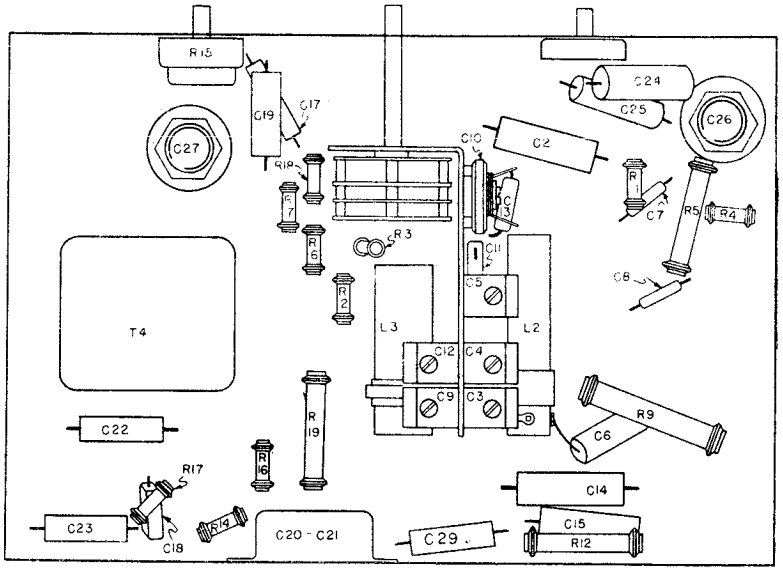

LOCATIONS OF PARTS UNDER CHASSIS

Dial Drive System

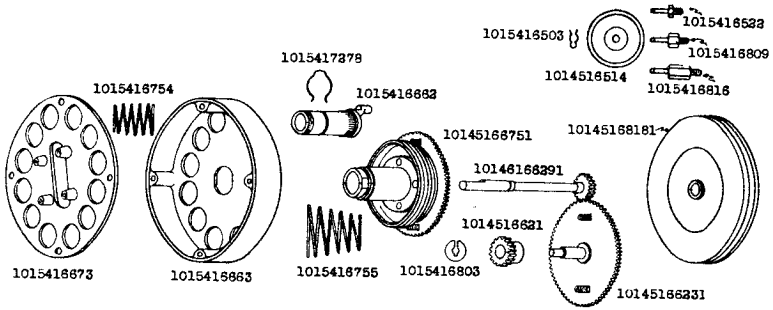

ALIGNMENT PROCEDURE

PRELIMINARY:

Output meter connection . . . . . Across voice coil leads

Output meter reading to indicate .5 watts output . . . . . 1.04 volts

Average sensitivity in microvolts for .5 watts output . . . . . See chart below

Dummy antenna value to be in series with generator output . . . . . See chart below

Connection of generator output lead . . . . . See chart below

Connection of generator ground lead . . . . . To chassis

Generator modulation . . . . . 30%, 400 cycles

Position of Volume Control . . . . . Fully clockwise

Position of Tone Control . . . . . Fully clockwise

Position of Dial Pointer when variable is fully meshed . . . . . To fall on center of large square block at 550 kc end of dial.

WAVE BAND SWITCH POSITION	POSITION OF DIAL POINTER	GENERATOR FREQUENCY	DUMMY ANTENNA	GENERATOR CONNECTION	TRIMMERS ADJUSTED (IN ORDER SHOWN)	TRIMMER FUNCTION	APPROXIMATE MICROVOLTS
"P"	1.8 mc	465 kc	.1 mfd.	6L7G Grid	T2,T1	IF Output IF Input	115
"A"	1500 kc	1500 kc	.0002 mfd.	Ant. Term.	C9,C3,C1	Osc.Transl. RF	35
"A"	600 kc (rock)	600 kc	.0002 mfd.	Ant. Term.	C10	Padder	25
"P"	5 mc (rock)	5 mc	400 ohms	Ant. Term.	C12,C4	Oscillator Translator	115
"F"	16 mc (rock)	16 mc	400 ohms	Ant. Term.	C5	Translator	90

IMPORTANT ALIGNMENT NOTES

Where indicated by the word, "Rock", the variable should be rocked back and forth a degree or two while making the adjustment.

It is advisable to repeat the entire alignment procedure band by band and in the original order to insure greater accuracy.

Always keep the output from the test oscillator at its lowest possible value. As the sensitivity is increased by alignment, the generator output should be reduced correspondingly.

Values shown under, "Microvolts", are only approximate.

©John F. Rider, Publisher

Phono. Installation
Wave-trap Data

SEARS ROEBUCK & CO.

MODELS 4610,4669,4769
4789. Chassis 101.482

PHONOGRAPH PICK-UP JACK: A hole, covered with a brass insert, is provided in the back of the chassis. Remove the brass insert and mount the jack in this hole. Insulate the jack from the chassis by means of the two insulating washers supplied in the kit. The Schematic Section shows the connections to the jack. In addition, changes must be made in the wiring to the speaker socket and the electrolytic condenser.

The radio Volume Control and Tone Control will operate for the phonograph pick-up.

EARPHONE JACK: Mount the jack in the hole in the back of the chassis. The jack frame must be grounded to the chassis. Therefore, do not use the insulating washers.

CHASSIS 101.482

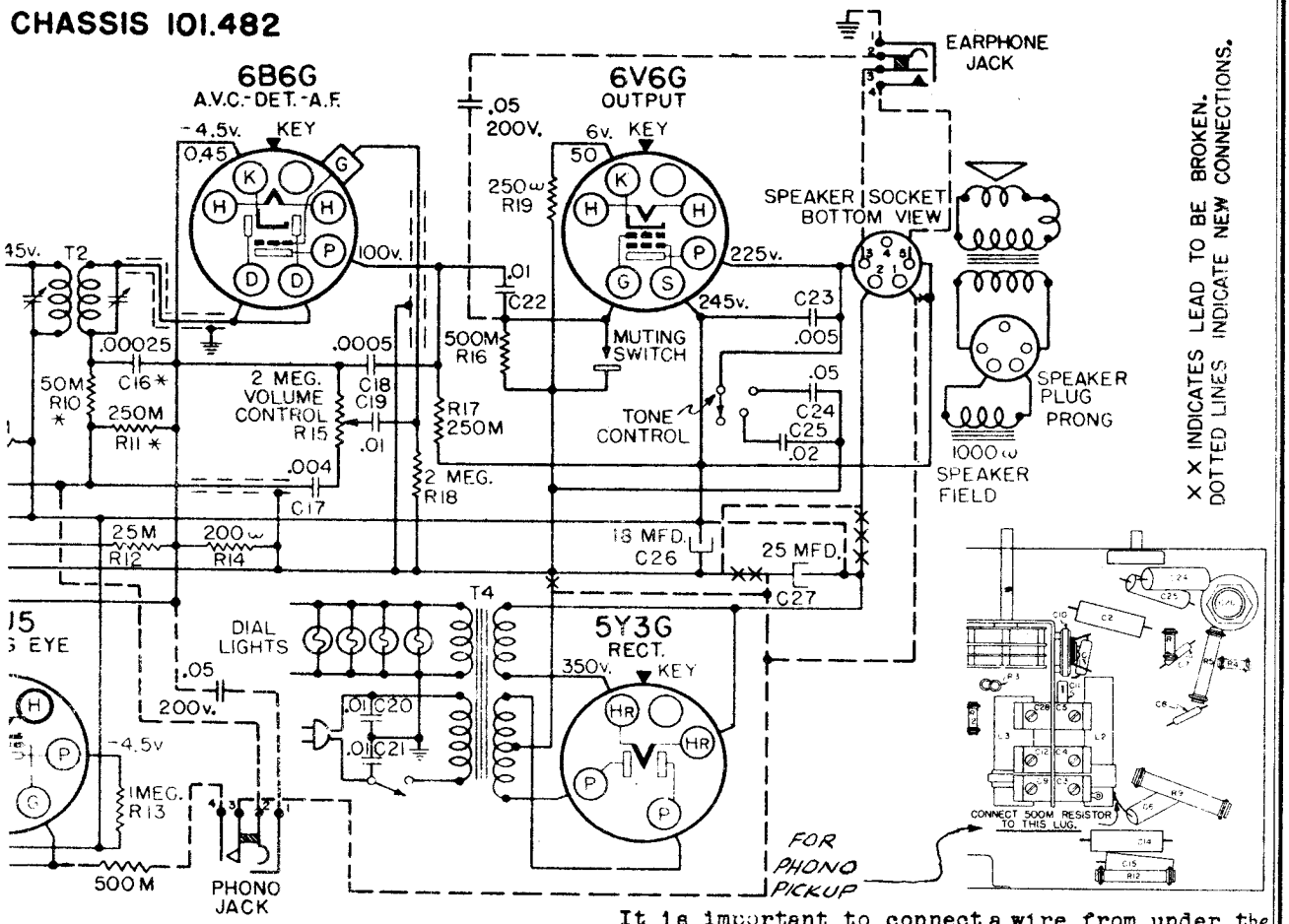

It is important to connect a wire from under the head of one of the wood screws to the chassis so that the wave trap shield becomes grounded to the chassis.

The wiring changes mentioned above for connection of the phonograph pick-up jack are not to be done if only an earphone jack is used.

With the connections as described, the loud speaker will not operate when the earphones are plugged in. If it is desired to have the loud speaker operate at the same time the earphones are plugged in, the connections to terminals 3 and 4 of the jack should be omitted.

ADDING A .01 MFD. CONDENSER TO ELIMINATE DISTORTION AT LOW VOLUME:

Distortion at low volume can be corrected by adding a .01 mfd. - 300 volt condenser from the cathode of the 6B6G tube to ground. This condenser is C39 in the wiring diagram. Chassis marked with the letter, "B", or a subsequent letter have had this change incorporated in production.

WAVE TRAPS:

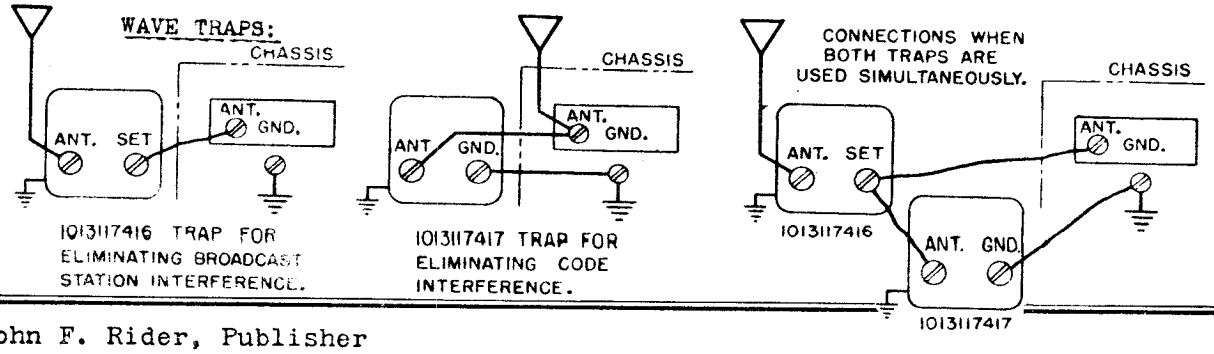

©John F. Rider, Publisher

IMPROPER OPERATION OF THE LO-NOISE CONTROL CIRCUIT:

Insufficient difference between the "break-in" and "drop out" points can be corrected by changing the 6Q7G Whisper Tuning tube. The 6A8G IF tube also has an effect. Try interchanging the 6Q7G "Lo-Noise" control tube with the 6Q7G Second Detector tube.

Another change that will improve the action of the "Lo-Noise" control circuit is replacement of the 700 ohm resistor, R17, with a 300 ohm one. This change has been incorporated in production in chassis stamped with the letter, "F", or a subsequent letter.

If further improvement is required, the 150 ohm resistor, R2, may be shorted out. This change will also increase the sensitivity of the AMERICAN band and the minimum sensitivity of the Tuning Eye about ten times.

Hum, occurring when the front control knob is in the "Lo-Noise" position, can be corrected by changing the 6Q7G "Lo-Noise" control tube. Sometimes, shifting the position of the heater leads to this tube will also minimize hum.

INCREASING THE SENSITIVITY OF THE TUNING EYE:

The minimum sensitivity of the Tuning Eye can be increased about ten times by shorting out the 150 ohm resistor, R2, as mentioned in the preceding paragraphs. Another change that will increase the sensitivity of the Tuning Eye without changing the sensitivity of the set or the action of the "Lo-Noise" control is to replace the 1 megohm resistor, R11, with a 250M ohm resistor. This resistor is incorporated in the Tuning Eye cable socket. This change has been incorporated in production in chassis stamped with the letter, "C", or a subsequent letter.

CORRECTING AF OSCILLATION:

Audio oscillation sometimes occurs due to the 6Q7G Second Detector grid lead being close to the adjacent 6V7G output tube. It can be corrected by moving the 6Q7G grid lead.

INSTRUCTIONS FOR INSTALLING PHONOGRAPH PICK-UP OR EARPHONE JACK:

If both phonograph pick-up connections and earphone connections are wanted, it will be necessary to use two kits. It will also be necessary to drill an additional hole in the back of the chassis for the additional jack.

PHONOGRAPH PICK-UP JACK: A hole, covered with a brass insert, is provided in the back of the chassis. Remove the brass insert and mount the jack in this hole. Insulate the jack from the chassis by means of the two insulating washers supplied in the kit. The Schematic Section shows the connections to the jack.

Connect the .05 condenser between lug #1 of the jack and the plate prong of the 6Q7 tube socket that is just above the LO-NOISE control rheostat.

Connect lug #2 of the jack to ground.

There is a terminal board mounted under the IF Input transformer. Connect the terminal on this board nearest the back of the chassis to lug #3 of the jack.

Connect lug #4 of the jack to the LO-NOISE control rheostat.

The radio Volume Control and Tone Control will operate for the phonograph pick-up.

EARPHONE JACK: Mount the jack in the hole in the back of the chassis. The jack frame must be grounded to the chassis. Therefore, do not use the insulating washers.

Connect the .05 condenser from terminal #2 of the jack to the grid prong of the 6V6G output tube.

Connect terminal #3 of the jack to terminal #5 of the speaker socket.

Connect terminal #4 of the jack to terminal #3 of the speaker socket.

This is the only wiring necessary. The wiring changes mentioned above for connection of the phonograph pick-up jack are not to be done if only an earphone jack is used.

With the connections as described, the loud speaker will not operate when the earphones are plugged in. If it is desired to have the loud speaker operate at the same time the earphones are plugged in, the connections to terminals 3 and 4 of the jack should be omitted.

ELIMINATING WHISTLE AT 930 KC:

A whistle, due to a beat between the second harmonic (930 kc) of the 465 kc IF, and a 930 kc signal may be experienced. In localities where the 930 kc station is one that is frequently listened to, it will be desirable to shift the whistle to some other point where it will not be objectionable. This can be done by shifting the IF frequency of the receiver.

Determine at what point between 900 kc and 960 kc the whistle will be least objectionable. Dividing this frequency by two will give the new IF frequency to which the receiver should be aligned. For example, if it is determined that a whistle at 915 kc would not be objectionable, the IF should be realigned at 915/2 or 457.5 kc. Try to select the new IF frequency as close as possible to 465 kc.

Align the IF at the new frequency and then realign the rest of the receiver as described under, "ALIGNMENT PROCEDURE".

THE LO-NOISE CONTROL - HOW TO SET IT UP:

When properly adjusted, the "Lo-Noise" control will make it possible to tune between favorite selected stations, of sufficient strength to insure good daylight reception, without inter-station noise while tuning. With the front control knob in the "Lo-Noise" position the receiver is insensitive until a sufficiently strong station is received. An important difference between this circuit and the ordinary variable sensitivity control circuit is that once the signal has "broken-in" the receiver sensitivity can increase considerably beyond the "break-in" point before the station "drops out". This makes it possible to hold a station that is fading moderately without having the station keep "breaking in" and "dropping out". When the front knob is turned to the "Normal" position the receiver acts as a conventional one.

To make the "Lo-Noise" adjustment, turn the control at the rear of the receiver all the way to the right (as you face the rear of the receiver). Turn the front control knob to the "Lo-Noise" position. Tune in your favorite strong stations that give satisfactory reception during the day and night and set the Volume Control to the desired level. Leave the Volume Control at this setting. Now tune from station to station and at the same time turn the rear control to the left until the noise between stations is reduced sufficiently to be not objectionable, and yet permits reception of the selected stations. Turning the rear control too far to the left may result in failure to receive some of the selected stations. If the selected stations are not very strong, a compromise may have to be made between the amount of noise and the number and distance of stations that can be tuned in with the knob in the "Lo-Noise" position.

The knob should always be in the "Normal" position when tuning for distant broadcast and short wave stations or for any station that cannot be heard when the control is in the "Lo-Noise" position. If a station "breaks-in" and then "drops out" with the knob in the "Lo-Noise" position, it indicates that the station is fading too badly for proper reception with the knob in the "Lo-Noise" position and should be listened to with the knob in the "Normal" position.

THE LO-NOISE CONTROL - HOW IT WORKS:

The following is intended as an understandable explanation of the "Lo-Noise" circuit without involving the details of the circuit.

The "Lo-Noise" circuit makes use of a 6Q7G tube. The effective plate voltage applied to this tube (and therefore the plate current) is adjustable by means of a potentiometer, which is the "Lo-Noise" control at the rear of the receiver. The plate current of this tube creates a voltage drop that is used to put a negative bias on the control grids of the RF, translator and IF tubes, reducing their gain. This negative voltage is also applied to the diodes of the Second Detector, preventing detector action and quieting the set.

A portion of the IF signal is fed to the diode of the 6Q7G "Lo-Noise" control tube. The resulting diode current creates a voltage that is applied to the grid of the tube to provide negative bias. When a sufficiently strong signal is tuned in, the negative bias applied to the grid of the 6Q7G tube will be enough to decrease the plate current of the tube. The voltage drop due to this plate current is biasing off the receiver, as explained in the previous paragraph. Therefore, the decrease in bias will increase the sensitivity of the RF, translator and IF stages. This increased sensitivity will permit more diode current flow in the "Lo-Noise" control tube thereby decreasing the plate current still further until the plate current is practically cut off. This action takes place in a fraction of a second so that the station seems to "break-in" instead of gradually building up in volume.

The strength of the signal necessary to create sufficient negative grid voltage on the "Lo-Noise" control tube to cut off the plate current depends upon the plate voltage of the tube which in turn is determined by the setting of the potentiometer. Therefore, this setting determines the "break-in" point of the receiver. The "drop out" point depends upon the plate current - grid voltage characteristic of the tube. This differs from the "break-in" point because at the "drop out" point the plate current of the tube is at a maximum; at the "break-in" it is at a minimum; and the plate current - grid voltage characteristic of the tube is different at these two extremes. When the front control knob is turned to the "Normal" position the plate circuit of the 6Q7G "Lo-Noise" control tube is opened so that it cannot put any negative bias on the other tubes.

©John F. Rider, Publisher

SEARS ROEBUCK & CO.

MODELS 4680, 4790
Chassis 101.479
Schematic, Voltage
Socket, Phono.

SEPT. 2, 1937

INTERMEDIATE FREQUENCY - 465 KC

DOTTED LINES INDICATE NEW CONNECTIONS

WIRING DIAGRAM FOR SILVERTONE CHASSIS 101.479

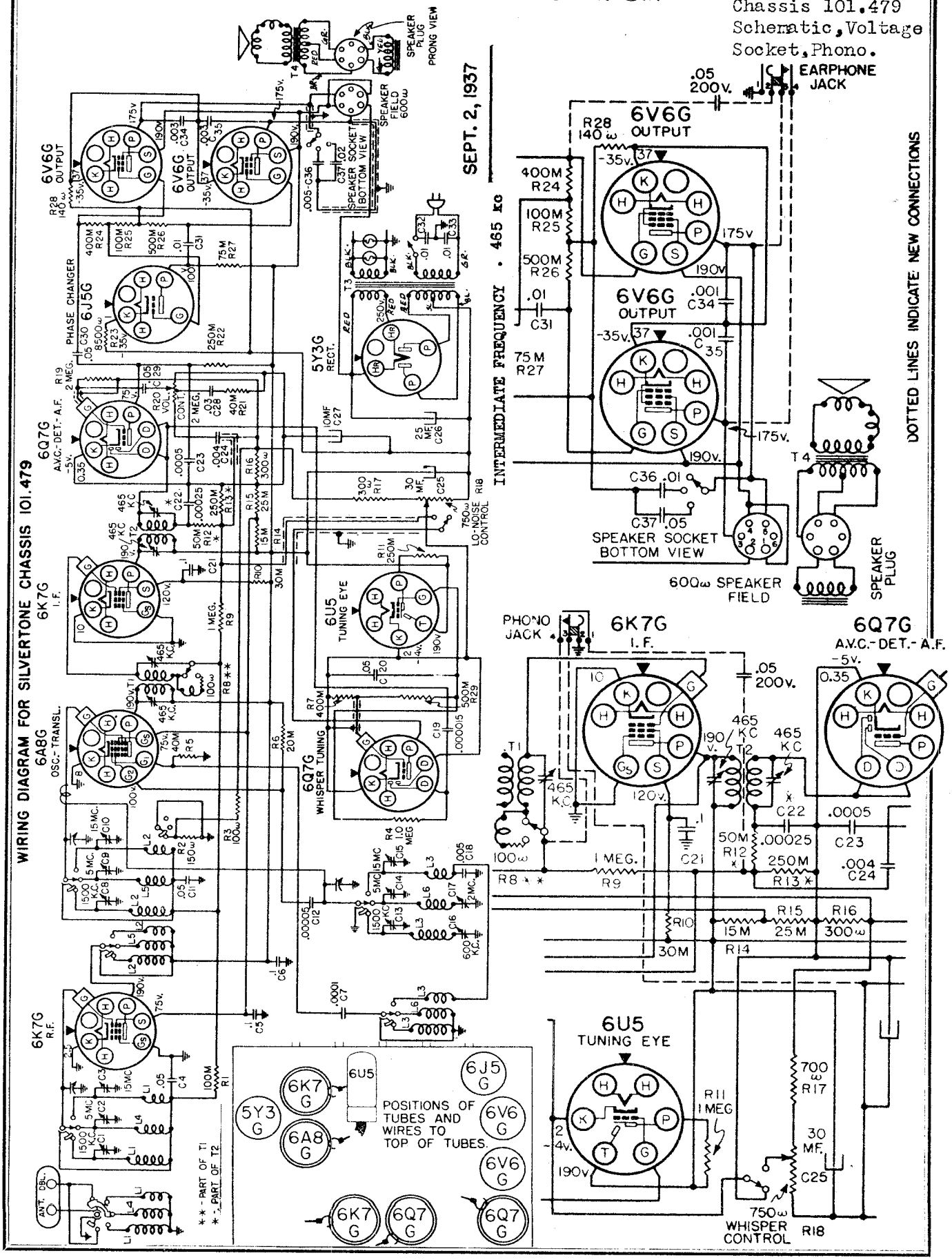

©John F. Rider, Publisher

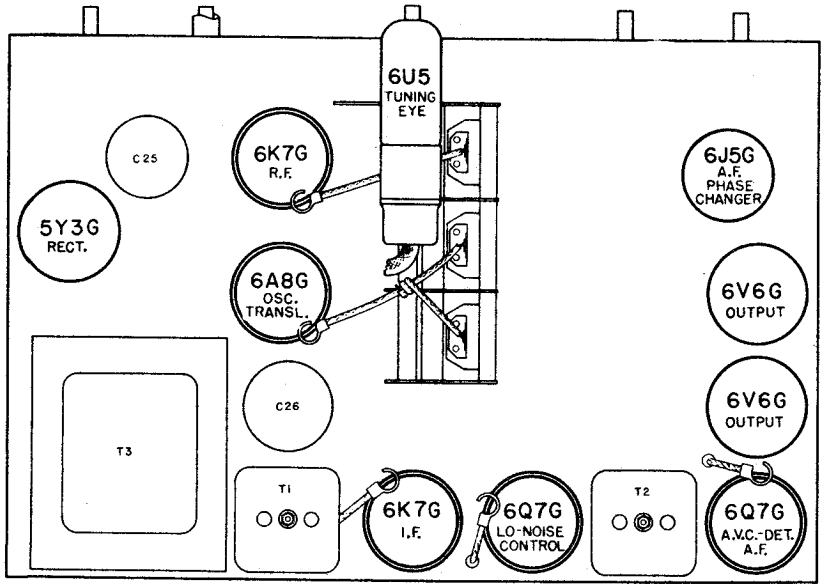

LOCATIONS OF PARTS ON TOP OF CHASSIS

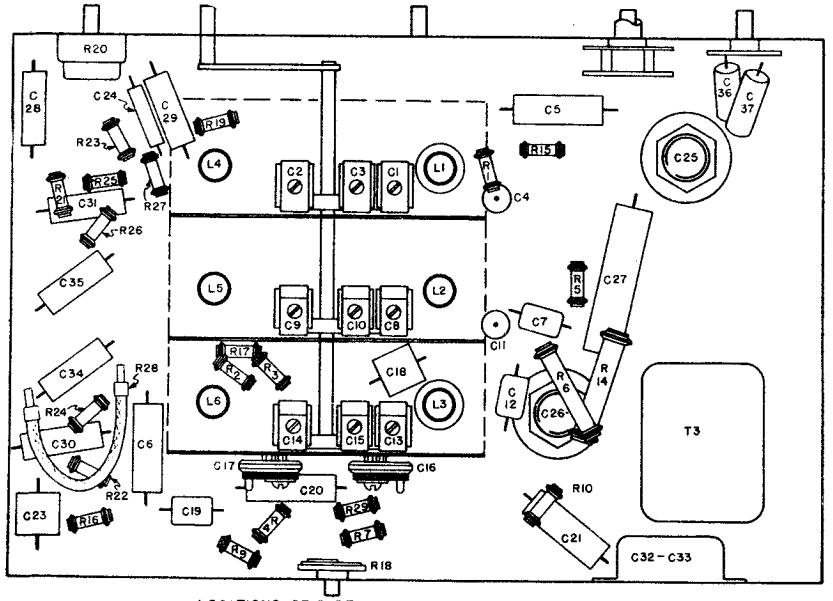

LOCATIONS OF PARTS UNDER CHASSIS

ALIGNMENT PROCEDURE

PRELIMINARY:

Output meter connections . . . . . Across speaker voice coil

Output meter reading to indicate .5 watts output . . . . . 1.31 volts

Approximate average sensitivity in microvolts for .5 watts output . . . . . See chart below

Dummy antenna value to be in series with generator output . . . . . See chart below

Connection of generator output lead . . . . . See chart below

Connection of generator ground lead . . . . . To chassis

Generator modulation . . . . . 30%, 400 cycles

Position of volume control . . . . . Fully clockwise

Position of tone control . . . . . Fully clockwise

Position of selectivity control . . . . . Sharp

Position of Lo-Noise control . . . . . Normal

Position of dial pointer with variable fully closed . . . . . To fall on last calibration mark at 550 kc end of AMERICAN band.

WAVE BAND SWITCH POSITION	POSITION OF VARIABLE	GENERATOR FREQUENCY	DUMMY ANTENNA	GENERATOR CONNECTION	TRIMMERS ADJUSTED (IN ORDER SHOWN)	TRIMMER FUNCTION	APPROXIMATE MICROVOLTS
"INT"	1.8 mc	465 kc	.1 mfd.	6A8G Grid	T2,T1	IF	5200
"AM"	1500 kc	1500 kc	.0002 mfd.	Ant. Term.	C13,C8,C1	Oscillator, Transl.,RF	35
"AM"	600 kc (rock)	600 kc	.0002 mfd.	Ant. Term.	C16	Padder	30
"INT"	5 mc	5 mc	400 ohms	Ant. Term.	C14	Oscillator	-
"INT"	5 mc (rock)	5 mc	400 ohms	Ant. Term.	C9,C2	Translator, RF.	3
"INT"	2 mc (rock)	2 mc	400 ohms	Ant. Term.	C17	Padder	6
"FOR"	15 mc	15 mc	400 ohms	Ant. Term.	C15	Oscillator	-
"FOR"	15 mc (rock)	15 mc	400 ohms	Ant. Term.	C10,C3	Translator, RF	10

IMPORTANT ALIGNMENT NOTES

Where indicated by the word, "Rock", the variable should be rocked back and forth a degree or two while making the adjustment.

Each step of the alignment should be repeated in its original order for greater accuracy. Always keep the output from the generator at its lowest possible value, to prevent the AVC action of the set from interfering with accurate alignment.

The shield plate that covers the coil assembly should be left in place while making the alignment adjustments. The trimmer screws are accessible through the holes in the shield.

Only the dummy antenna indicated in the chart for any particular band should be used. Remove the dummy antenna used for alignment of any other band.

No connection should be made to the doublet terminal on the antenna connection block.

POWER OUTPUT:
Type . . . . . Push-Pull (Beam Tubes)
Undistorted . . . . . 6 watts
Maximum . . . . . 10 watts

LOUD SPEAKER:
Type . . . . . Dynamic
Size . . . . . 10" and 12"
Field coil resistance . . . . 600 ohms
App. field coil voltage drop . . . 60 volts

POWER SUPPLY:
All models available . . . . . 105-125 volts, 50-60 cycle, 85 watts
All models available . . . . . 105-125 volts, 25 cycle, 90 watts

©John F. Rider, Publisher

SEARS ROEBUCK & CO.

MODEL 4684
Chassis 101.502
Schematic, Voltage
Phono. Installation

WIRING DIAGRAM FOR SILVERTONE CHASSIS 101.502

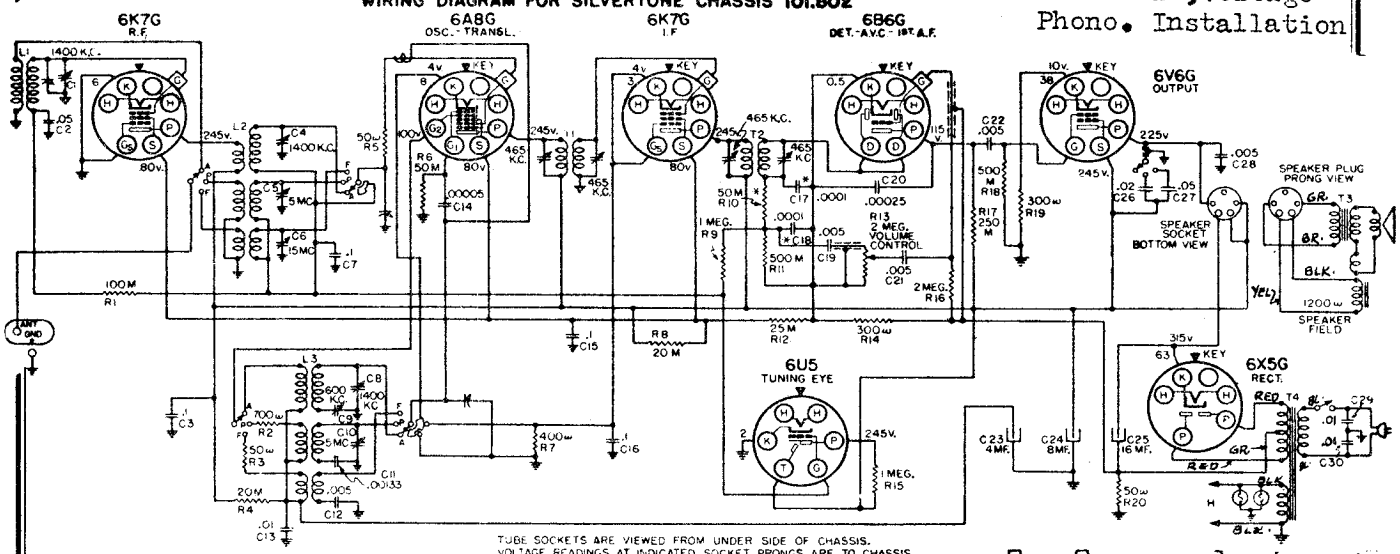

TUBE SOCKETS ARE VIEWED FROM UNDER SIDE OF CHASSIS.
VOLTAGE READINGS AT INDICATED SOCKET PRONGS ARE TO CHASSIS.
ALIGNMENT IS TO BE MADE AT THE FREQUENCIES SHOWN AT THE TRIMMER CONDENSERS. VOLTAGES MUST BE MEASURED WITH NO SIGNAL WHERE NO VOLTAGE READING IS SHOWN AT SOCKET PRONG, IT INDICATES ZERO VOLTAGE OR A VERY LOW READING.
FIGURES AT CATHODES ARE CATHODE CURRENT IN MILLIAMPERES.
* - PART OF T2

INTERMEDIATE FREQUENCY
465 kc

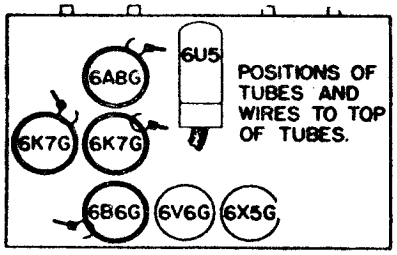

POWER OUTPUT:

Type	Beam
Undistorted	2 watts
Maximum	3.3 watts

POWER SUPPLY:

All models available . . . 105-135 volts, 50-60 cycle, 50 watts
All models available . . . . 105-135 volts, 25 cycle, 55 watts

INSTALLING PHONOGRAPH PICK-UP OR EARPHONE JACK:

DEC. 1, 1937

CHASSIS 101.502

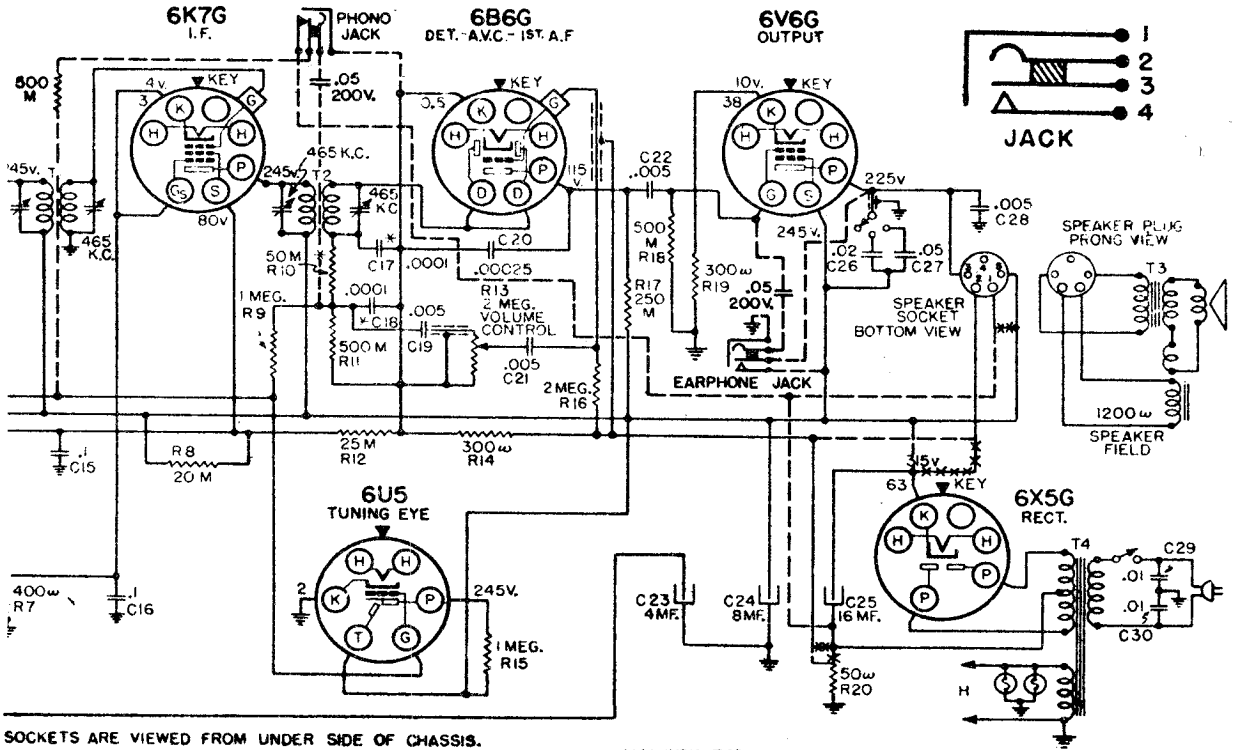

SOCKETS ARE VIEWED FROM UNDER SIDE OF CHASSIS.

XX-INDICATES LEADS TO BE OPENED.
DOTTED LINES INDICATE NEW CONNECTIONS.

©John F. Rider, Publisher

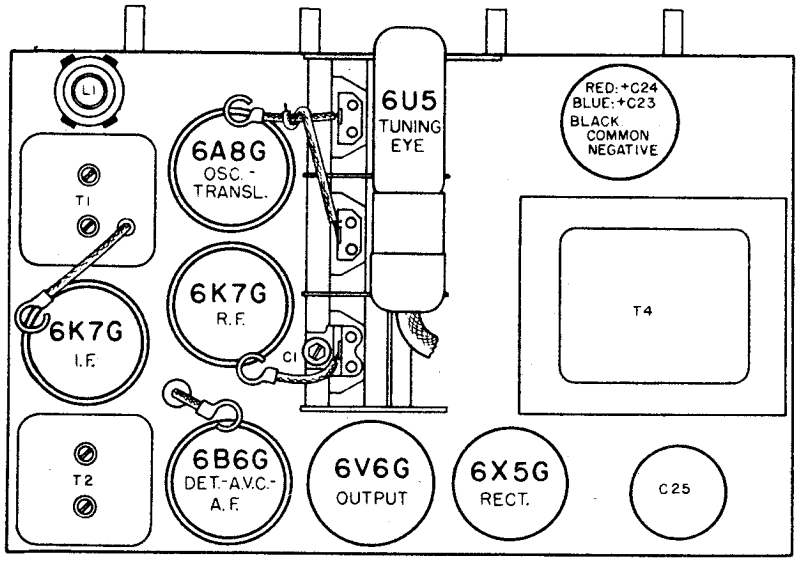

LOCATIONS OF PARTS ON TOP OF CHASSIS.

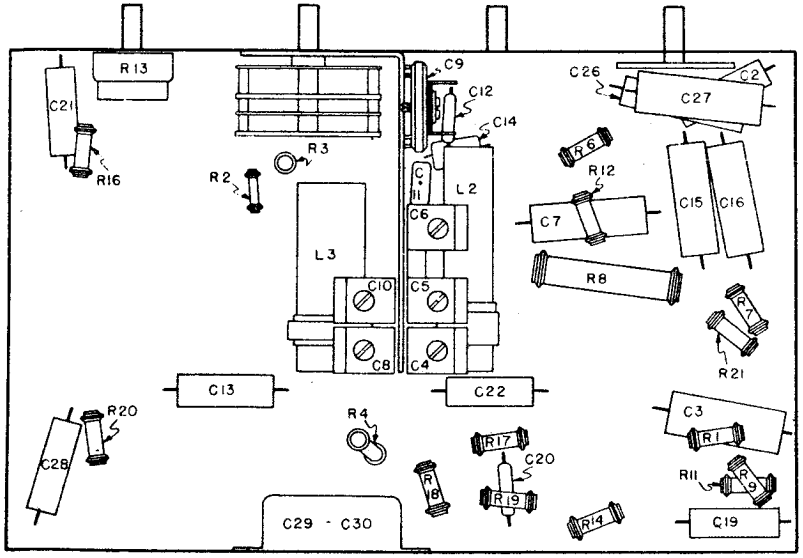

LOCATIONS OF PARTS UNDER CHASSIS.

ALIGNMENT PROCEDURE

PRELIMINARY:

Output meter connections . . . . . Across voice coil leads

Output meter reading to indicate .5 watts output . . . . . 1.04 volts

Average sensitivity in microvolts for .5 watts output . . . . . See chart below

Dummy antenna value to be in series with generator output . . . . . See chart below

Connection of generator output lead . . . . . See chart below

Connection of generator ground lead . . . . . To chassis

Generator modulation . . . . . 30%, 400 cycles

Position of volume control . . . . . Fully clockwise

Position of tone control . . . . . Fully clockwise

Position of dial pointer with variable fully meshed . . . . . To fall along horizontal line of the dial.

WAVE BAND SWITCH POSITION	POSITION OF VARIABLE	GENERATOR FREQUENCY	DUMMY ANTENNA	GENERATOR CONNECTION	TRIMMERS ADJUSTED (IN ORDER SHOWN)	TRIMMER FUNCTION	APPROXIMATE MICROVOLTS
"P"	1.8 mc	465 kc	.1 mfd.	6A8G Grid	T2,T1	IF	60
"A"	1400 kc	1400 kc	.0002 mfd.	Ant. Term.	C8,C4,C1	Oscil.-Transl. Antenna	30
"A"	600 kc (rock)	600 kc	.0002 mfd.	Ant. Term.	C9	Padder	60
"P"	5 mc	5 mc	400 ohms	Ant. Term.	C10	Oscillator	-
"P"	5 mc (rock)	5 mc	400 ohms	Ant. Term.	C5	Translator	45
"F"	15 mc (rock)	15 mc	400 ohms	Ant. Term.	C6	Translator	60

IMPORTANT ALIGNMENT NOTES

Where indicated by the word, "Rock", the variable should be rocked back and forth a degree or two while making the adjustment.

It is advisable to repeat the entire alignment procedure band by band and in the original order to insure greater accuracy.

Always keep the output from the test oscillator at its lowest possible value. As the sensitivity is increased by alignment, the generator output should be reduced correspondingly.

Values shown under, "Microvolts", are only approximate.

ELIMINATING WHISTLE AT 930 KC:

A whistle, due to a beat between the second harmonic (930 kc) of the 465 kc IF, and a 930 kc signal may be experienced. In localities where the 930 kc station is one that is frequently listened to, it will be desirable to shift the whistle to some other point where it will not be objectionable. This can be done by shifting the IF frequency of the receiver.

Determine at what point between 900 kc and 960 kc the whistle will be least objectionable. Dividing this frequency by two will give the new IF frequency to which the receiver should be aligned. For example, if it is determined that a whistle at 915 kc would not be objectionable, the IF should be realigned at 915/2 or 457.5 kc. Try to select the new IF frequency as close as possible to 465 kc.

Align the IF at the new frequency and then realign the rest of the receiver as described under, "ALIGNMENT PROCEDURE".

LOUD SPEAKER:

Type . . . . . Dynamic
Size . . . . . 6" and 8"
Field coil resistance . . . 1200 ohms
App. field coil voltage drop . . . 70 volts

FREQUENCY RANGES:

Band "A" . . . . . 540-1800 kc
Band "P" . . . . . 1760-6300 kc
Band "F" . . . . . 5950-18,500 kc

©John F. Rider, Publisher

SEARS ROEBUCK & CO.

MODELS 4688,4788,4799
Chassis 100.159
Schematic

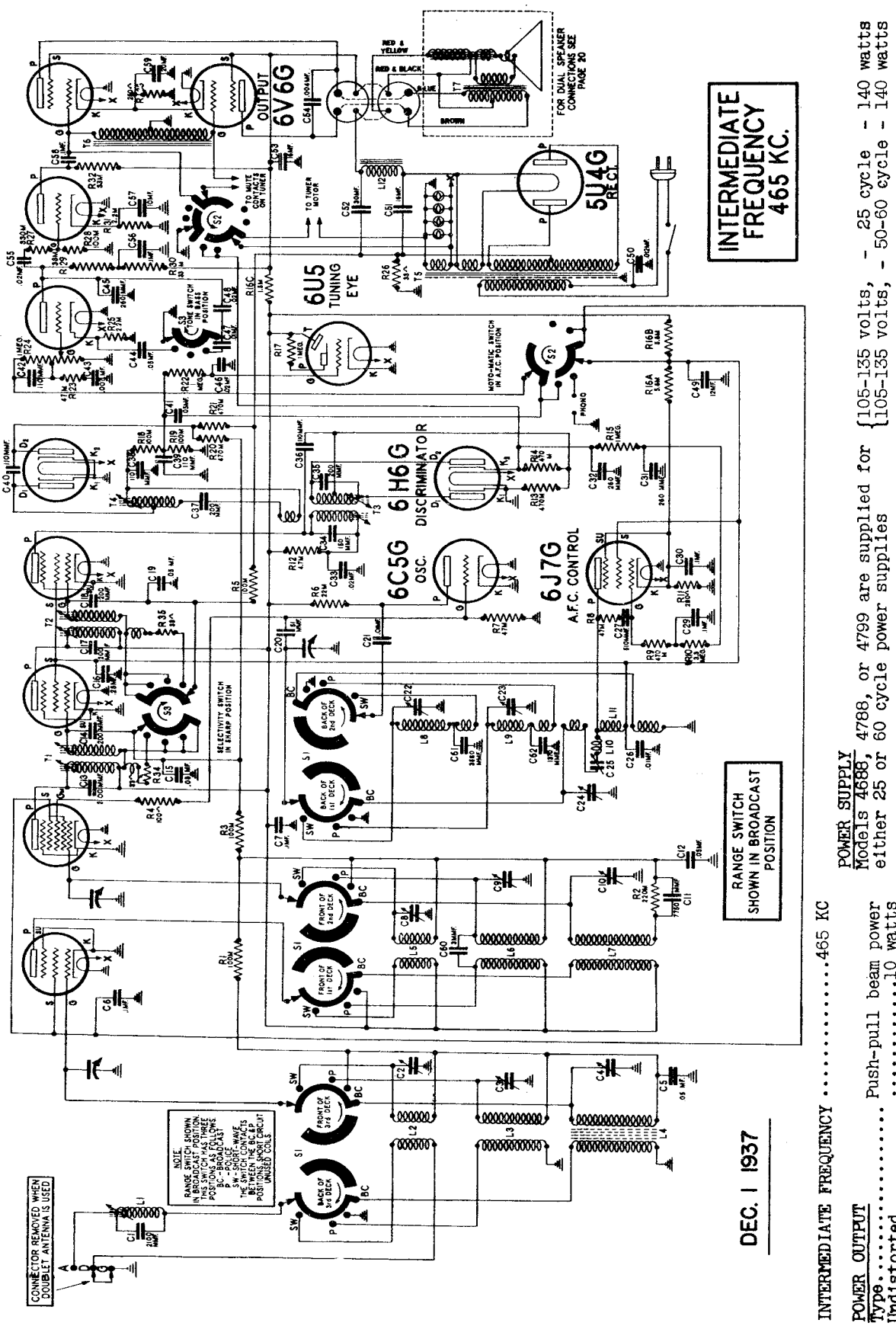

DEC. 1 1937

INTERMEDIATE FREQUENCY .....465 KC

POWER OUTPUT
Type..... Push-pull beam power
Undistorted.....10 watts
Maximum.....14 watts

POWER SUPPLY
Models 4688, 4788, or 4799 are supplied for either 25 or 60 cycle power supplies

{105-135 volts, - 25 cycle - 140 watts
105-135 volts, - 50-60 cycle - 140 watts

©John F. Rider, Publisher

MODELS 4688,4788,4799
Chassis 100.159
Socket,Trimmers
Speaker Connections

SEARS ROEBUCK & CO.

SPEAKER CONNECTIONS FOR DUAL SPEAKER MODELS

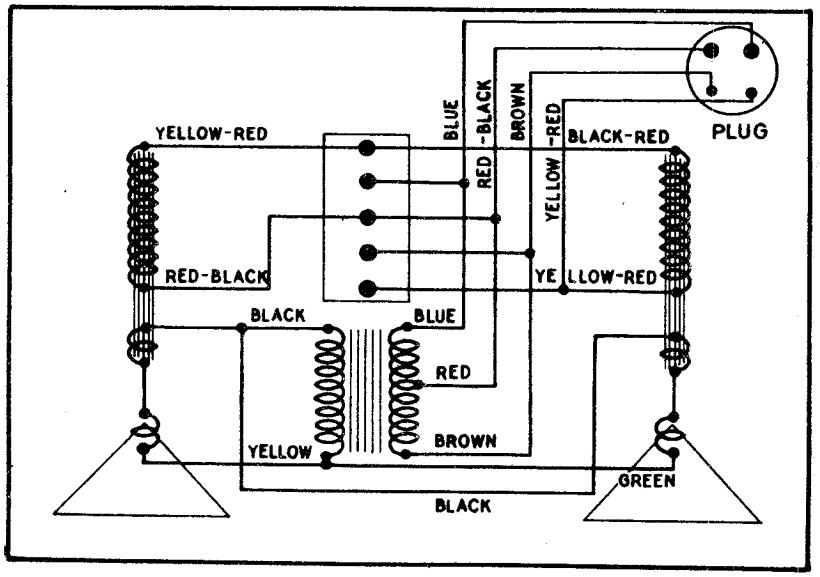

LOUD SPEAKERS

Model	Field Res. (Hot)	Field Coil Voltage
4688	400	60 volts
4788	185	28 volts
4788-4799	175	27 volts
4799	185	28 volts

ALIGNMENT FREQUENCIES

1500 KC.; 600 KC.
5000 KC.
16,000 KC.

FREQUENCY RANGES

Band A	525 to 1680 KC.
Band P	1655 to 5600 KC.
Band F	5540 to 18,100 KC.

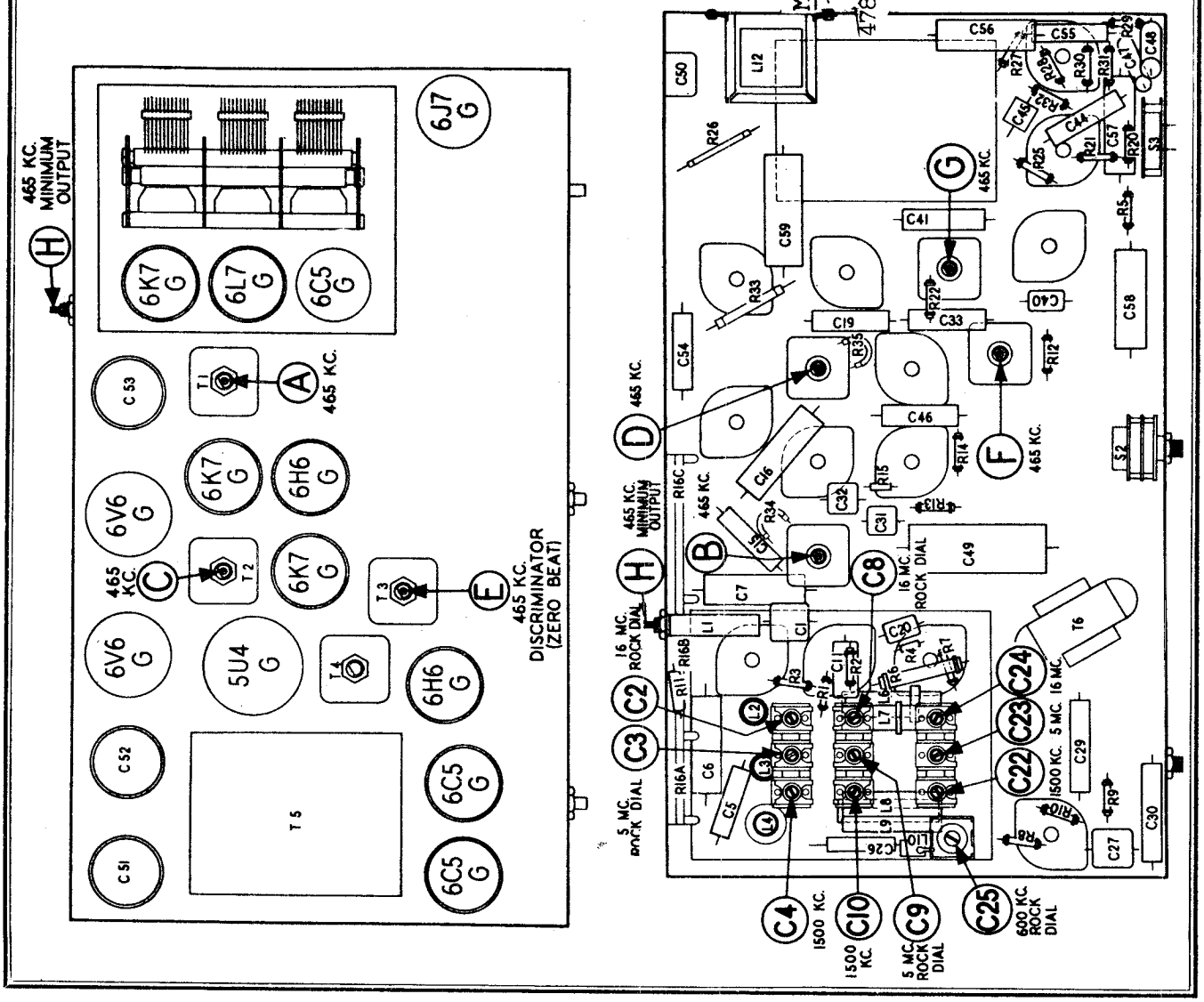

©John F. Rider, Publisher

©John F. Rider, Publisher

ALIGNMENT PROCEDURE

PRELIMINARY

Before attempting to align the receiver check to see that the dial pointer is opposite the last scale division on the low frequency end of the dial when the gang condenser is in full mesh. Also when the gang condenser is in full mesh the stop pin on the left side of the tuner should be resting against the forward stop. If after examination it is found that the gang is in full mesh and the stop pin is against the forward stop, but the pointer is set to the wrong position, it will only be necessary to loosen the set screw on the dial drive gear at the left side of the mechanism. Then grasp the large drum on the same side of the tuner and turn it until the pointer is set correctly. Now retighten the set screw in the gear being careful to see that the gear is meshing properly.

On the other hand if the stop pin does not rest against the forward stop with the gang condenser in full mesh, loosen the set screw on the gang condenser side of the flexible coupler. Then turn the tuning knob until the stop pin rests against the forward stop on the tuner. Now tighten the set screw in the flexible coupler and proceed to set the pointer to its correct position by the method described in the previous paragraph.

Output meter connections.....Across voice coil leads

Output meter reading to indicate 0.5 watt output.....1.0 volts

Average sensitivity in microvolts for 0.5 watt output.....See chart below

Generator ground connection.....Receiver Chassis

Connection of generator output lead.....See chart below

Generator modulation.....30%, 400 cycles

Position of volume control.....Maximum clockwise

-IMPORTANT-

1.-TONE CONTROL MUST BE IN SHARP POSITION.

2.-ALLOW RECEIVER TO WARM UP 15 MINUTES BEFORE ALIGNING.

3.-A.F.C.-ON-OFF SWITCH MUST BE IN THE CENTER NON-A.F.C. POSITION EXCEPT WHERE OTHER POSITION IS SPECIFIED.

ORDER OF ALIGN.	DIAL POINTER POSITION	SIGNAL GENERATOR FREQUENCY	DUMMY ANTENNA	SIGNAL GENERATOR CONNECTION	TRIMMER NUMBER	SENSITIVITY (MICROVOLTS)	BAND SWITCH POSITION
A	ANY POINT WHICH DOES NOT AFFECT SIGNAL	465 KC.	.1 MFD.	6L7-G CONTROL GRID	A-B-C-D-F-G	85	BAND A (Counter-clockwise)
B	ANY POINT WHICH DOES NOT AFFECT SIGNAL	465 KC.	400 OHM CARBON RESISTOR	ANTENNA TERMINAL	H MINIMUM OUTPUT		BAND A (Counter-clockwise)
C	1500 KC.	1500 KC.	400 OHM CARBON RESISTOR	ANTENNA TERMINAL	C22-C10 C4	7	BAND A (Counter-clockwise)
D	* TUNE TO 600 KC. GEN.SIG.	600 KC.	400 OHM CARBON RESISTOR	ANTENNA TERMINAL	C25	6	BAND A (Counter-clockwise)
E	THE A.F.C. SYSTEM MUST NOW BE ALIGNED. SEE "A.F.C. ALIGNMENT" AT TOP OF NEXT PAGE FOR PROCEDURE.						
F	** 5 MC.	5 MC.	400 OHM CARBON RESISTOR	ANTENNA TERMINAL	C23-C9 C3	7	BAND P (Center)
G	* ** 16 MC.	16 MC.	400 OHM CARBON RESISTOR	ANTENNA TERMINAL	C24-C8 C2	8	BAND F (Clockwise)

* When aligning the American band padder C25 at 600 KC. and the short wave detector trimmer C8 at 16 MC. it is necessary to adjust the trimmers while slowly rocking the gang condenser through a small distance. "Rocking" the gang is essential if maximum sensitivity is to be obtained.

** When aligning the short wave or police bands, care should be taken in adjusting trimmers C23 or C24, since two possible adjustments of this trimmer will result in signal peaks. The proper peak is that which occurs with the trimmer screw farthest out.

IMPORTANT:- The following adjustment must be made after every re-adjustment of the I.F. and broadcast band trimmers.

The A.F.C. discriminator should now be adjusted as follows:

1. Place the A.F.C. (Moto-Matic) switch in the center (non A.F.C.) position
2. Loosely couple the output of the signal generator output lead to the insulation on the control grid wire. Set the signal generator to about 465 KC. Then carefully adjust signal generator to resonance with I.F. system by tuning the signal generator dial for maximum output meter deflection.
3. When doing this be sure that the receiver dial is at some point where it has no tuning effect on the generator signal. Switch off the modulation of the signal generator.
4. With the signal generator connected and operating as in #2, connect an antenna to the "A" terminal lug on the back of the chassis and manually tune in a powerful local station in region of 1000 KC. or lower. (Avoid stations around 930 KC. which might beat with second harmonic of the test oscillator.)
5. Adjust the receiver tuning dial to obtain "zero beat" between the test oscillator and the incoming signal. (A very slight adjustment is all that is required. Be careful not to tune off signal.)
6. Turn the A.F.C. (Moto-Matic) switch to the extreme clockwise position (Motor).
7. Adjust the secondary of the discriminator transformer using trimmer E to restore zero beat. NOTE: This trimmer should be adjusted to the point where the frequency of the beat note increases rapidly if the trimmer is turned in either direction. Other zero beat points may be found with the trimmer all the way out or all the way in, but these settings are incorrect!

If the above operation has been performed correctly, turning the A.F.C. switch from center to clockwise position (Regular to Motor) should not change the beat note by more than a slight rumble.

Note: Where a second signal generator is available step #4 above may be varied as follows:

Connect second signal generator (set at about 1000 KC.) to antenna and tune in its signal. Switch off modulation and proceed as before.

This method is somewhat preferable to the first as the zero beat setting is more easily determined when both signals are unmodulated.

HOW TO TEST THE A.F.C. SYSTEM

Connect the antenna and tune in a powerful local station. See that the A.F.C. switch is in the center position. (A.F.C. off)

Next, detune the receiver dial until the music or speech becomes somewhat distorted. Throw the A.F.C. switch into the A.F.C.-on (clockwise) position. This should improve the quality of the program being received.

Similarly detune the receiver in the opposite direction, with A.F.C. switch in center position. Place A.F.C. switch in clockwise position and again check for improved quality of reception.

It will be noted that the correction for mis-tuning afforded by the A.F.C. system is not as marked at stations near the low frequency end of the dial scale as it is at the higher broadcast frequencies. This is characteristic of A.F.C. systems. However, if throwing the A.F.C. switch into the extreme clockwise position has no effect on the signal, or is effective for mistuning in one direction only, check the receiver as follows:

1. Re-align I.F., broadcast band, and discriminator trimmers.
2. Check all tubes in the receiver. Defective 6H6 and 6J7 tubes, also the R.F., 1st Detector and I.F. tubes may cause poor A.F.C. action.
3. If the above procedure fails to remedy the defect in A.F.C. action, check the entire A.F.C. circuit itself for possible troubles.

THE MOTO-MATIC TUNER

HOW TO SET UP STATIONS ON THE TUNER:-

1. Before setting up the "automatic tuner" it is necessary that the receiver be operated for about 20 minutes in order that all internal parts reach a constant temperature and all operating conditions are fully stabilized.

2. Turn the MOTO-MATIC SWITCH knob (lower center control) to the extreme right hand position. When the knob is in this position the word "MOTOR" will appear illuminated in the indicator just below the dial scale.

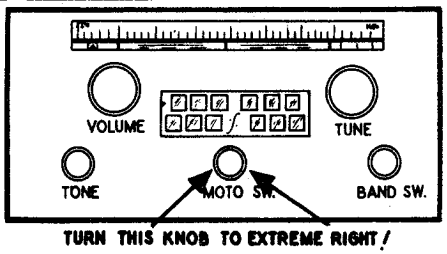

Turn the tone knob (lower-left-hand control) to the extreme left until pointer is pointing to "Sharp" on the indicator and leave this control set to this position during the entire following procedure of setting up the "Moto-Matic Electric Tuner."

3. Remove the large knob on the station selector shaft which is the control in the upper right hand corner of the receiver panel. (see fig. 6) This knob may be removed by simply pulling it away from the panel. As this knob is removed another small knob on the same shaft, partly hidden behind the panel face, will appear.

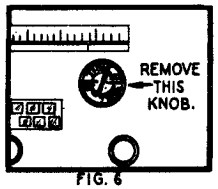

FIG. 6

4. Grasp this knob and pull it out as far as it will go and at the same time "rock" it so that the gears in the mechanism at the rear will mesh properly (see fig. 7).

5. The knob should now be rotated to the right (clockwise) as far as it will go. Keep turning the knob to the right even though it becomes harder to turn as it nears the end of its rotation. The knob will turn rather stiffly and the dial pointer will travel over to the left side of the dial scale. After the pointer reaches the end of the scale continue to turn the knob clockwise about 3/4 of a turn until it reaches a definite stop. This last twist releases the mechanism controling the tuner. THE KNOB MUST BE TURNED AS FAR AS IT WILL POSSIBLY GO OTHERWISE THE MECHANISM WILL NOT BE RELEASED AND IT WILL BE IMPOSSIBLE TO SET THE TUNER TO STATIONS.

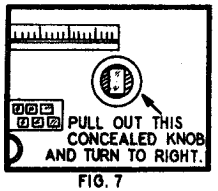

FIG. 7

6. Push any button which you wish to set to a particular station. Be sure the button is pushed all the way in (see fig. 8).

7. Set "Moto-Matic" switch to "Manual", grasp the small station selector knob again and tune the receiver to the desired station. Tune carefully, making use of the tuning eye to be sure that you are correctly tuned to the station in question.

8. The depressed button is set to the station as soon as it is released in either of the two following ways depending on whether you wish to set up more buttons or whether only the one button is to be set up.

A. IF NO MORE BUTTONS ARE TO BE SET UP. Proceed as described under No. 11, 12 and 13.

B. IF ADDITIONAL BUTTONS ARE TO BE SET UP. Turn the "Moto-Matic" switch to "Motor". Release the first button by pushing in the next button you wish to set up and proceed as follows:

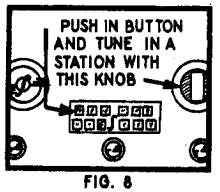

FIG. 8

9. Set "Moto-Matic" switch to "Manual", tune in the station that you wish to receive with the button that is now depressed, again making use of the tuning eye to be sure that you are correctly tuned to the station.

10. Continue to set up as many other buttons as desired in the same manner, that is, push in the button, set the "Moto-Matic" switch to "Manual", tune in the station, set the "Moto-Matic" switch to "Motor", then push the next button.

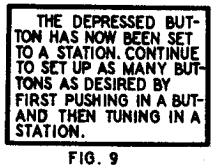

FIG. 9

11. In order to release the last button which now remains depressed, grasp the knob on the station selector shaft and push it back into the cabinet as far as it will go and then pull it out again. Do not forget to "rock" the control when pulling it out in order that its gears may mesh properly (see fig. 10).

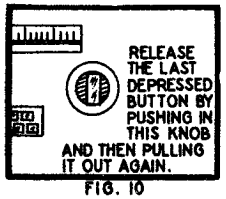

FIG. 10

12. Turn the knob to the LEFT until you reach a definite stop. A firm pressure must be applied otherwise you will not lock all of the internal controls (see fig. 11) The knob will turn rather stiffly and the dial pointer will travel over to the right side of the scale. Continue to turn the knob to the left even after the pointer reaches the end of the dial scale. APPLY A FIRM PRESSURE UNTIL THE KNOB REACHES A DEFINITE STOP.

13. Push the small station selector knob back into the cabinet again and put on the large knob that was originally pulled off of this shaft at the start of operations (see fig. 11).

14. Your "automatic tuner" is now ready for operation. Labels bearing the names of all stations are supplied for use in labeling the push buttons. To label the push buttons you must first remove the cap of the push button. The cap is pulled off by pulling on the top end which has a small hump that holds the cap. Remove the white cardboard tab and insert the label for the station to which the button was set. In replacing the cap start at the bottom and press on the top.

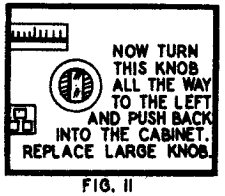

FIG. 11

15. YOU DO NOT NEED TO ADJUST THE AUTOMATIC TUNER AGAIN UNLESS YOU DESIRE TO SET ANY ONE OR MORE OF THE BUTTONS TO DIFFERENT STATIONS.

In order to reset one or more buttons of the "automatic tuner" to different stations, it is only necessary to repeat operations No. 3, 4 and 5; then push in the button that you wish to reset and tune in the new station. Repeat this operation with any other buttons to be changed and then "lock up" the mechanism as explained in operations No. 11, 12 and 13. THE REMAINING BUTTONS WHICH YOU HAVE NOT DISTURBED WILL REMAIN "SET-UP" TO THEIR ORIGINAL STATIONS.

16. It is not advisable to set up the "automatic tuner" for operation on short wave or police band. However, the "tuner" may be set up for stations on the police band but extremely accurate tuning such as is obtainable on the broadcast band cannot be expected. In this case the automatic tuner will only serve to give the approximate location of the station.

HOW THE TUNER OPERATES:-

The "Moto-Matic Tuner" is a mechanical device which has for its prime purpose the accurate noiseless and speedy tuning of a station, by the push of a button. This function is performed in the following manner.

As the push button on the keyboard is depressed, a pawl arm at the rear of the tuner comes forward and rests against a circular cam. It will be noted that these cams have two different heights (that is, a high and a low side). The purpose of the two different levels will be self-evident as this explanation progresses.

Projecting from the rear of the unit is a set of switches which are motivated by a Bakelite switch operating cam and arm. This arm is in turn operated by the movement of the pawls. Therefore, it is readily seen that the position of the pawl arm will control the setting of the electrical contacts of the switches in question.

Since the contacts of this switch are frequently referred to, it is advisable that we designate each set of contacts by name as follows: Reading from the front of the switch to the rear:-

1. REVERSING CONTACTS:- For reversing the direction of motor rotation.
2. STARTING CONTACTS:- For opening and closing the motor power supply line.
3. MUTE CONTACTS:For silencing the audio system to prevent noise coming through to the speaker during automatic tuning.
4. A.F.C. CONTACTS:- The A. F. C. contacts are closed in order to remove A.F.C. until the station is tuned in, thus eliminating the possibility of "grasping" the wrong station before the tuner comes to rest. (A.F.C. is again restored when the mechanism comes to rest).

©John F. Rider, Publisher

©John F. Rider, Publisher

Also located directly above the tuning shaft will be found an auxiliary pair of contacts known as the power contacts. These contacts are the last ones to close when the tuner goes into operation thus allowing all switches to reach their proper settings before any power is actually turned on.

Before any button is depressed or with the tuner in the manual tuning position all contact switches are in the position shown in Figure 13.

Now as the button is depressed the corresponding pawl arm will come forward to rest upon either the high or low side of a cam depending upon the cams position. If the pawl arm comes to rest on the high side of a cam, the bakelite arm will come up only a short distance and the reversing contacts will make in the forward position. If it comes to rest on the low side of a cam, the bakelite arm will come up further and the reversing contacts will make in the rear position. These positions are indicated in figures 14 and 15. Thus it can be seen that the position of the pawl arm, whether on high or low side of cam, will determine the direction of rotation of the motor.

Regardless of whether the pawl is on the high or low side of the cam, the bakelite arm will close the starting contacts, mute contacts, and A.F.C. contacts.

Also after all of the above contacts have been made the power contacts over the tuning shaft will close thus causing the motor to run.

We now have the tuner in operation and the motor proceeds to drive the mechanism to the proper position for the desired station and the following events will occur.

First, the pawl arm will fall into a notch in the circular cam. This in turn causes the Bakelite cam to set the rear contact switches in a new position. The starting contacts then open and the motor stops. Since the pawl is in the notch the mechanism cannot move further. The shock of the sudden stop is taken up by the clutch shown in Figure 12.

FIG. 12 RIGHT SIDE VIEW OF MOTO-MATIC TUNER

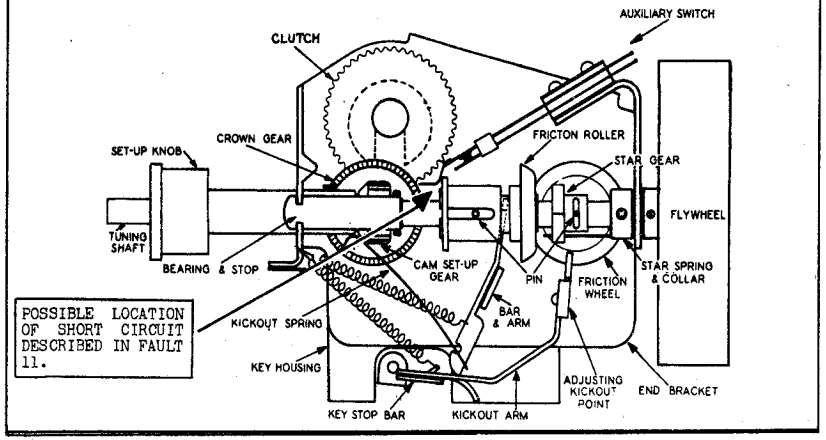

The A.F.C. and mute contacts are both open, thus allowing the signal to come through the receiver and also allowing the A. F. C. to function which in turn puts the finishing touches on a perfectly tuned-in program. This position of the switch showing the station tuned-in is shown in Figure 16

Thus we have completed one entire cycle from push button to the completely tuned program, utilizing the Moto-Matic tuner.

We wish to call your attention to the control mechanism on the right side of the tuner, (see Figure 12) which disengages the manual tuning mechanism when automatic tuning is used. The most important features here are the "kickout arm" and the friction roller.

The friction roller must disengage from the friction wheel when the tuner motor is in operation. This is accomplished by a projection on the push button itself which, when pushed in, pushes the "bar and arm" assembly backward. Since the bar and arm assembly rotates on a pivot, it will cause the upper end of the bar to disengage the friction roller from the rubber friction wheel. The lower end will go backward allowing the kickout arm to come up until the adjustable tip touches a valley in the star-wheel. It may now be seen that the motor does not now have to drive the tuning shaft which eliminates the turning of the tuning knob while the motor is running.

Now when you again grasp the tuning knob to tune manually the star wheel, which is touching the adjustable tip of the kickout arm, will rotate and push the kickout arm down. The kickout arm true to its name "kicks out" the push button and releases the pawl which was engaged with a cam. The mechanism is thus again entirely free to turn and the friction roller and rubber friction wheel are again engaged. Thus by turning the tuning knob you can also tune your station manually, provided the A.F.C. knob is placed in the manual position.

GENERAL SWITCH CONTACT ADJUSTMENT

The moto-matic tuner has two sets of switches, "back switch" and "side switch", which are the heart of the automatic control system. The successful operation of the tuner depends to a considerable degree upon the proper operation of these switches.

The following discussion explains in detail the necessary operations for adjustment of the various switch contacts and should be used in conjunction with figures 13, 14, 15 and 16 appearing on the next page. (Please note that two sets of diagrams are given since a change was made in the design of the bakelite switch operating cam and the back switch. To distinguish which set to use on the receiver that you are repairing, it will only be necessary for you to read the notes at the head of the two pages showing these drawings).

①-BEFORE MAKING ANY ADJUSTMENTS TURN OFF THE POWER.

②-IN ORDER TO PLACE THE MECHANISM IN ANY OF THE POSITIONS SHOWN IN FIGS. 13,14,15,OR 16, IT IS ONLY NECESSARY TO PULL THE SET-UP KNOB OUT, UNLOCK THE CAMS, AND TURN THE SET-UP KNOB TO THE DESIRED POSITION.

ADJUSTMENT OF BACK SWITCH

It is highly important that all contacts of this switch be set in exactly the right position. The contacts should make and break as shown in figures 13, 14, 15 and 16 for any button. Minor adjustments of the switch to secure these settings may be obtained by bending the various blades.

If more than minor adjustments are necessary the following instructions should be carried out in every detail.

1. The back switch should be so positioned as to require a minimum of bending of the switch blade.

2. The contact pressure of all contacts should be such as to cause about 1/64 inch travel of all contacts after they close. This provides adequate wiping action to keep the contact surface clean and insure positive contact.

3. With the back switch in the positions indicated in either figures 13, 14, 15 or 16 the contacts should be adjusted such that:-

(a) The mute contacts should close before the motor contacts do and open after them to provide quiet tuning. To accomplish this the mute contacts should not open as far as the starting contacts do.

(b) Minimum opening of the motor contacts is desirable. This keeps the power on as long as possible and permits the pawl to fall completely into the notch in the cam. On the other hand the contacts must break clean -- far enough apart to prevent excessive arcing.

SEARS ROEBUCK & CO.

(c) The mute and A.F.C. operating blades should not press against each other or against the switch operating arm, but just barely touch. Otherwise they may cause the bakelite cam to bind or "hang".

4. If the back switch arms require too much bending for proper adjustment it will be necessary to loosen the two switch bracket mounting screws and reset the entire switch. The switch should then be set with the mechanism in the position shown in figure 16, with the switch operating arm resting just on the top edge of the hump marked check point "X" in figure 16. If the switch is set too high the operating arm will not come up out of the notch on the bakelite cam far enough to cause the contacts to open. If the switch is set too low the operating arm will open the contacts and cut the power off too soon.

Now to further check the proper position of the back switch, push in another button which will cause a pawl to fall on the high side of its station selector cam as shown in figures 14. The tips of the operating arms of the main and reversing contacts should be approximately 1/16 of an inch from the bottom of the valley in the bakelite cam as shown in figure 14 check point "Y". If this distance is less than this amount, an excessive pressure is exerted on the bakelite cam when in the position shown in figures 13 and 16, thus causing it to bind or "hang". If the distance is greater than that shown here, there is insufficient contact movement for good switch adjustment.

Check each button for the settings outlined above, using the set-up knob to turn the cam shaft rather than turning the power on. Due to slight variations in the pawls, it will not be possible to adjust for all buttons so that the switch operating arm rests exactly at the "check points" referred to, but, all buttons must cause the back switch operating arm to come up out of the notch in the bakelite cam when a pawl falls into its notch on the station selector cam.

In order to check the reversing contacts, run the dial pointer to the high frequency end of the dial, and then push each button in, in turn. Check the reversing contacts to see that they take the position shown in figure 15. The two outside blades of this group must not be in contact with the center blade at the same time, otherwise the 6 volt winding of the power transformer may be short circuited. Make such slight adjustments as may be necessary to secure the proper contact settings by bending the switch blades.

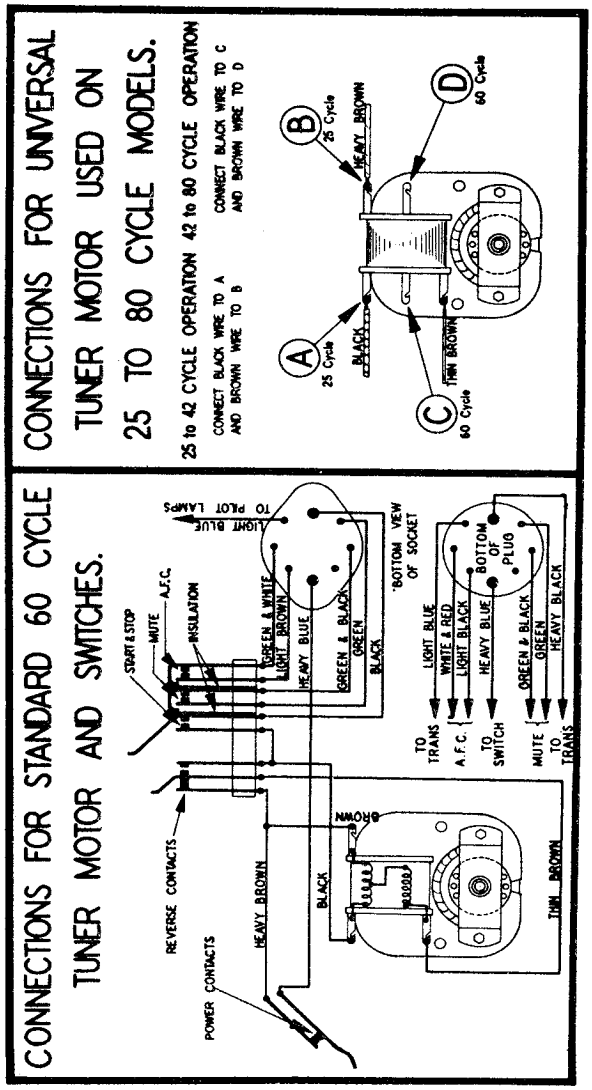

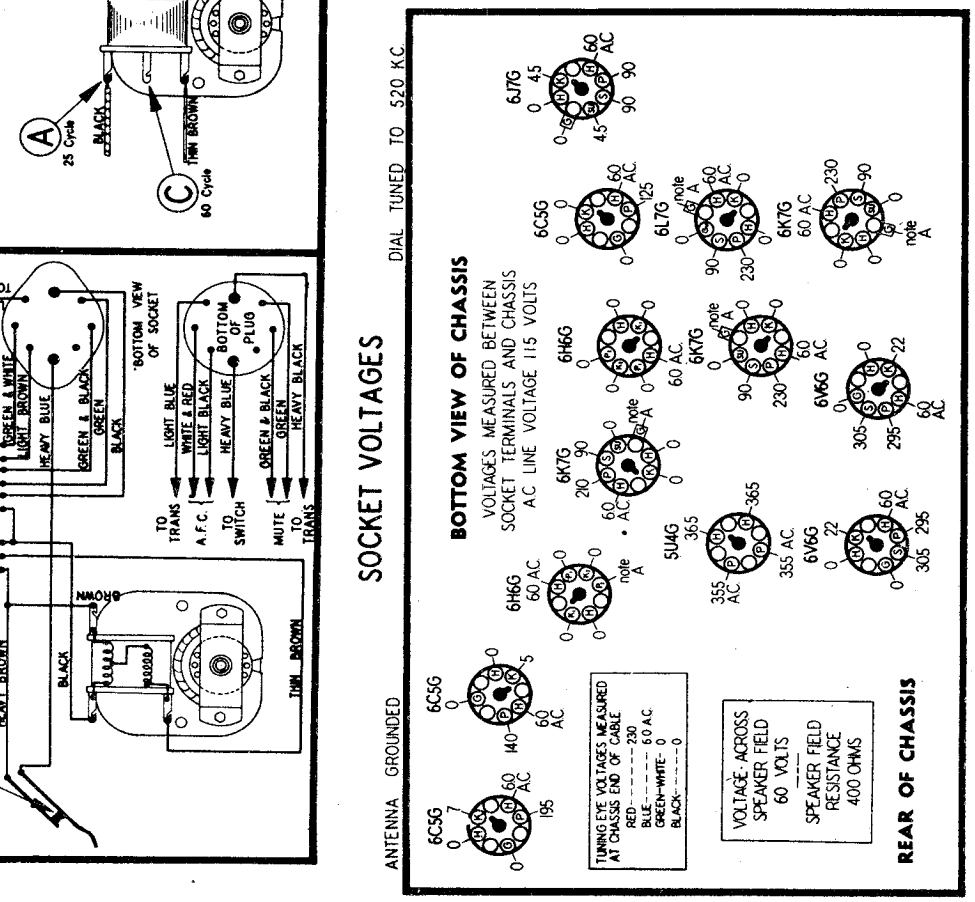

Use a high resistance voltmeter of 1600 ohms per volt.

NOTE A: The bias for the control grids of the 6L7-G, 6K7-G first I.F. 6K7-G, second I.F. and the diode of the 6H6-G 2nd detector tube is -4.5 volts measured across resistor R26.

©John F. Rider, Publisher

©John F. Rider, Publisher

ADJUSTMENT OF SIDE SWITCH

The purpose of the side switch is to keep the power supply for the motor open until the back switch contacts have all had time to reach their proper positions.

To secure such a sequence of contact closing the bakelite ring on the friction roller assembly should not come forward under the operating arm of the side switch until all of the contacts of the back switch are closed. To make this adjustment bend the switch mtg. bracket in such a manner that the switch operating arm will be carried forward or backward relative to the bakelite ring on the friction roller, as the situation may require. This is done in order that the back switch contacts shall all have had time to make contact.

If this adjustment is not obtained, when a button is pushed in slowly or only part way the motor may start too soon or run the wrong direction.

HOW TO RESTRING THE DIAL CORDS

MAIN DIAL POINTER DRIVE CORD

The cord for the main pointer drive system is approximately 65 inches in length. Before attempting to restring this drive cord, the large drum on the left side of the mechanism must be placed in the position shown in the diagram. That is, the two small holes in the drum must be on the back of the drum near the top.

Now put a knot in one end of the cord and thread the cord through the lower of the two holes in the drum, (see point marked "Start Here" in figure 17) leaving the knotted end inside of the hole in the drum. Wind the cord down the back side of the drum in a counter-clockwise direction (when viewed from the left side) until 1-3/4 turns have been made. The cord is now carried up and around pulley G, then across the dial to pulley H. Proceed to carry the cord up around pulley H (see figure 17). After leaving the top of pulley H proceed across to pulley I and then down behind the large drum to pulley F. Carry the cord up around pulley F and back to the front side of the large drum. Wind the cord up over the drum, using the outer (left) edge, until the upper hole in the drum is reached. Thread the cord through the hole and tie the tension spring to its end in such a manner that when the spring is clipped into position the spring will be extended to about 1-1/8 inches.

The main dial pointer should now be clipped on the upper strand of cord that is now stretched between pulleys H and I. The pointer should be clamped in position just opposite the last dial division on the high frequency end of the dial.

(FIG. 17)

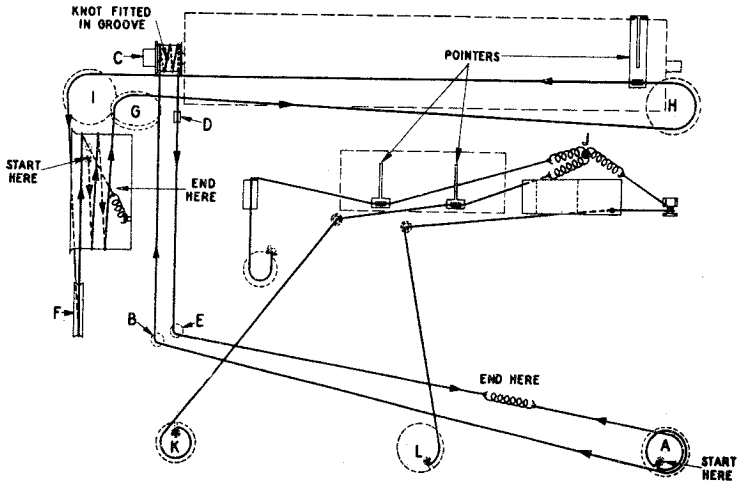

RANGE SWITCH AND ROLLER SCALE DRIVE

The cord for restringing the roller scale range indicator drive should be approximately 55 inches long. To restring this drive cord place the range switch in the American (A) position. Tie a knot approximately 6 inches from one end. Then tie a second knot exactly 27-1/2 inches from the first knot.

Now place the first knot in the slot in pulley A allowing the short end of the cord to project to the right. Take the long end of the cord and wind one complete turn around pulley A in a clockwise direction. Then continue across to the bottom of pulley B and up to the front of pulley C. Wind one complete turn around pulley C in a counter-clockwise direction looking at it from the left end of the mechanism. Now rotate the dial drum until the slot in the pulley exactly meets the knot which you previously tied in the cord and which appears at this point in the winding. Place the knot in the slot in pulley C and taking the free end of the cord proceed to wind one more complete turn around pulley C in the same direction (counter-clockwise).

Now take the cord down over pulley D to the bottom of pulley E. Proceed from pulley E to the right and allow the cord to remain loose until you have finished the following steps.

Take small short end of the cord that extends to the right of pulley A and wind it up over the pulley counter-clockwise and tie the tension spring to its end. Then take the cord that is extending from the left side and tie it to the other side of this tension spring so that the spring is extended to about 1-1/8 inches.

You have now completed the cord circuit, but the rotating scale may not be in the correct position. Since the range switch is in the American position the roller dial should present the American scale to the escutcheon face. If it does not loosen the set screw in pulley C and rotate the drum to the desired position. Then retighten the set screw.

MOTOR-REGULAR-PHONO INDICATOR DRIVE CORD

This cord is approximately 22 inches in length. Start to restring by placing the moto-matic switch in the phono (Maximum counter-clockwise) position.

Now tie a knot in one end of the cord. Tie a second knot exactly 15 inches from the first. Then place the first knot in the slot in the pulley on the moto-matic switch shaft. Wind the cord up around the pulley (1/2 turn counter-clockwise) and up to the eyelet hole in the frame (just under the volume indicator). Then carry the cord to the right and thread it through the hole in the movable section of the Motor-Reg.-Phono indicator. The knot in cord should just reach the back of this movable celluloid slider.

Now taking the cord, which extends from the front of the hole in the slider, tie the tension spring to its end so that the spring will be extended to about 1-1/8" when clipped in position on holder J. (see figure 17.)

OFF-ON AND VOLUME INDICATOR DRIVE

The length of this cord should be approximately 18 inches. Put the volume control and off-on switch in the "off position" (maximum counter-clockwise). Tie one end of the cord around the set screw on the collar appearing on this shaft. Then wind the cord clockwise around the shaft and over the pin about 3/4 of a turn. (Do not wind the cord around the pin itself). Then take the cord up through the last remaining hole in the frame and over to the volume indicator. Clamp the pointer, for this indicator, on the cord so that it points to the word "off" on the indicator. Tie the remaining end of the cord to the tension spring so that when the spring is clipped to hole J (see figure 17) it will be extended to a length of 1-1/8 inches.

TONE AND SELECTIVITY DRIVE CORD

The length of this cord should be approximately 20 inches. Start by placing the tone switch in the bass position (maximum counter-clockwise). Place a knot in one end of the cord and put the knot in the slot in the pulley on the tone switch shaft.

Then wind one complete turn around the pulley on the tone shaft in a clockwise direction. Carry the cord up to the hole in the frame (next to the tuning eye). Take the cord to the right until it is under the tone selectivity indicator. Then holding the cord taut clip the pointer, for this indicator, tightly to the cord so that it points to the word bass on the indicator. The remaining cord should be tied to the tension spring which is then clipped to the hole marked J (see figure 17).

MODELS 4688,4788,4799
Chassis 100.159
Switch Data

SEARS ROEBUCK & CO.

THESE ILLUSTRATIONS APPLY ONLY TO RECEIVERS USING THE NEW BACK SWITCH AND CAM, HAVING SERIAL NUMBERS AS FOLLOWS: MODEL 4688 - ABOVE 934,302 MODEL 4788 - ABOVE 939,000 MODEL 4799 - ALL CHASSIS. For receivers having lower serial numbers see drawings on previous page.

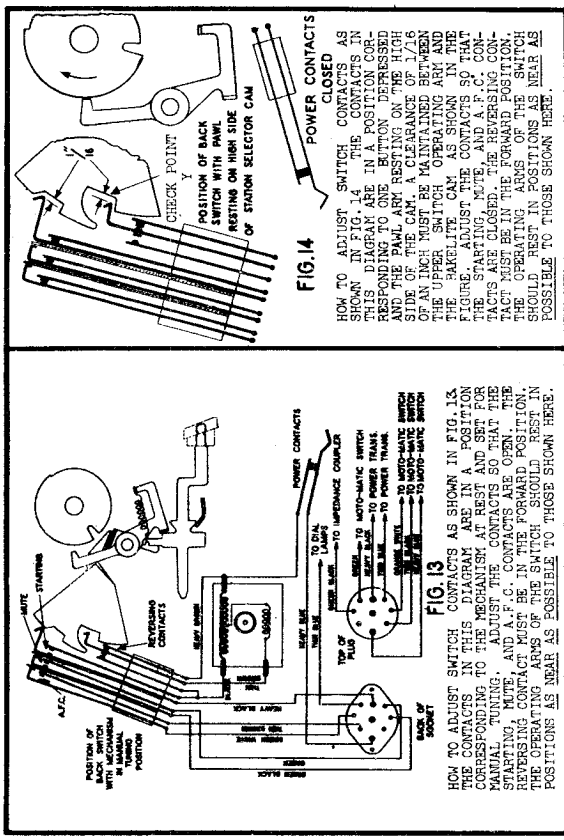

FIG. 13

HOW TO ADJUST SWITCH CONTACTS AS SHOWN IN FIG. 13 THE CONTACTS IN THIS DIAGRAM ARE IN A POSITION CORRESPONDING TO THE MECHANISM AT REST AND SET FOR MANUAL TUNING. ADJUST THE CONTACTS SO THAT THE STARTING, MUTE, AND A.F.C. CONTACTS ARE OPEN. THE REVERSING CONTACT MUST BE IN THE FORWARD POSITION. THE OPERATING ARMS OF THE SWITCH SHOULD REST IN POSITIONS AS NEAR AS POSSIBLE TO THOSE SHOWN HERE.

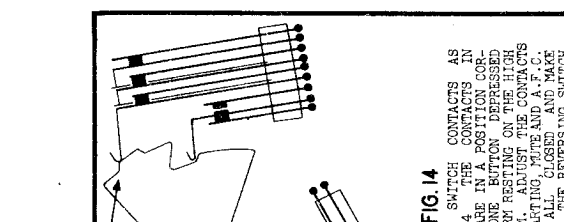

FIG. 14

HOW TO ADJUST SWITCH CONTACTS AS SHOWN IN FIG. 14 THE CONTACTS IN THIS DIAGRAM ARE IN A POSITION CORRESPONDING TO ONE BUTTON DEPRESSED AND THE PAWL ARM RESTING ON THE HIGH SIDE OF THE CAM. ADJUST THE CONTACTS SO THAT THE STARTING, MUTE AND A.F.C. CONTACTS ARE ALL CLOSED AND MAKE GOOD CONTACT. THE REVERSING SWITCH CONTACT MUST BE IN THE FORWARD POSITION.

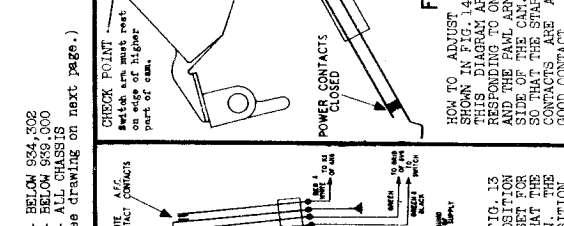

FIG. 13

HOW TO ADJUST SWITCH CONTACTS AS SHOWN IN FIG. 13 THE CONTACTS IN THIS DIAGRAM ARE IN A POSITION CORRESPONDING TO THE MECHANISM AT REST AND SET FOR MANUAL TUNING. ADJUST THE CONTACTS SO THAT THE STARTING, MUTE, AND A.F.C. CONTACTS ARE OPEN. THE REVERSING SWITCH SHOULD HAVE 1/16" CLEARANCE FROM THE OPERATING CAM.

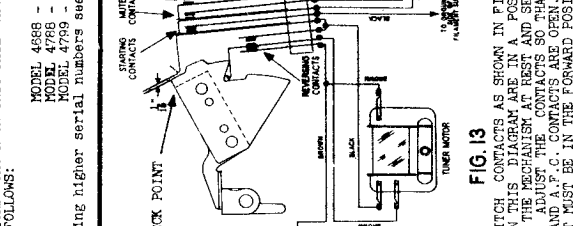

FIG. 15

HOW TO ADJUST SWITCH CONTACTS AS SHOWN IN FIG. 15 THE CONTACTS IN THIS DIAGRAM ARE IN A POSITION CORRESPONDING TO ONE BUTTON DEPRESSED AND THE PAWL ARM RESTING ON THE LOW SIDE OF THE CAM. A CLEARANCE OF 1/16 OF AN INCH MUST BE MAINTAINED BETWEEN THE UPPER SWITCH OPERATING ARM AS SHOWN IN THE FIGURE. ADJUST THE CONTACTS SO THAT THE STARTING, MUTE, AND A.F.C. CONTACTS ARE CLOSED. THE REVERSING CONTACT MUST BE IN THE FORWARD POSITION. THE OPERATING ARMS OF THE SWITCH SHOULD REST IN POSITIONS AS NEAR AS POSSIBLE TO THOSE SHOWN HERE.

IMPORTANT

IN ADJUSTING ALL SWITCH CONTACTS A DEFINITE CONTACT PRESSURE MUST BE MAINTAINED. YOU CAN DETERMINE THIS CONTACT PRESSURE AS FOLLOWS: AFTER THE CONTACT POINTS TOUCH INITIALLY THERE MUST BE A FURTHER MOVEMENT OF THE CONTACT ARMS OF AT LEAST 1/64 OF AN INCH. THIS TYPE OF "WIPING CONTACT" IS IMPERATIVE FOR GOOD OPERATION OF YOUR "MOTO-MATIC TUNER".

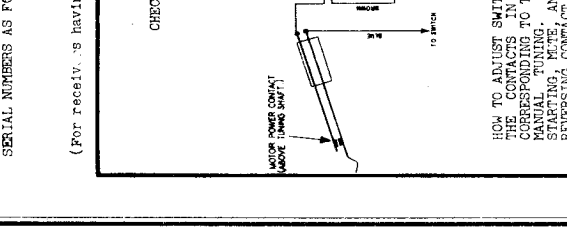

FIG. 14

HOW TO ADJUST SWITCH CONTACTS AS SHOWN IN FIG. 14 THE CONTACTS IN A POSITION CORRESPONDING TO ONE BUTTON DEPRESSED AND THE PAWL ARM RESTING ON THE HIGH SIDE OF THE CAM. A CLEARANCE OF 1/16 OF AN INCH MUST BE MAINTAINED BETWEEN THE UPPER SWITCH OPERATING ARM AND THE HAKELITE CAM AS SHOWN IN THE FIGURE. ADJUST THE CONTACTS SO THAT THE STARTING, MUTE, AND A.F.C. CONTACTS ARE CLOSED. THE REVERSING CONTACT MUST BE IN THE FORWARD POSITION. THE OPERATING ARMS OF THE SWITCH SHOULD REST IN POSITIONS AS NEAR AS POSSIBLE TO THOSE SHOWN HERE.

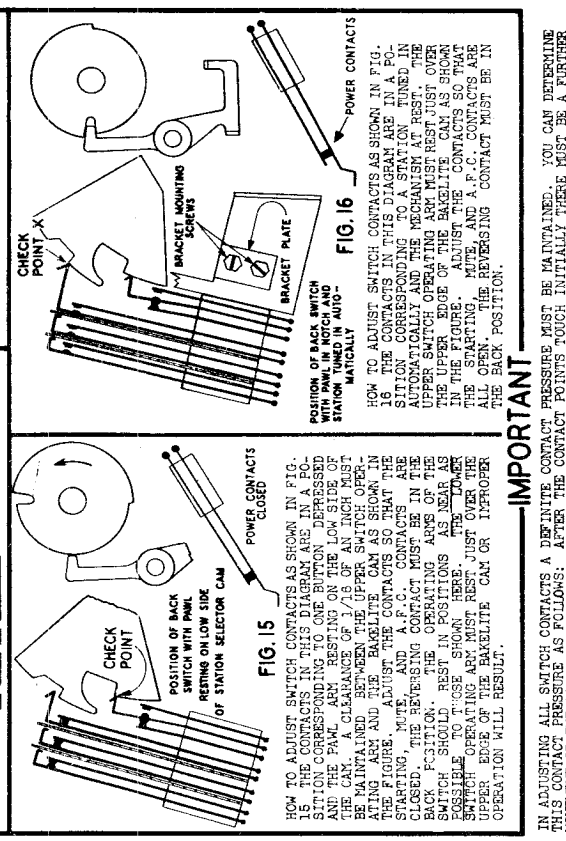

FIG. 16

HOW TO ADJUST SWITCH CONTACTS AS SHOWN IN FIG. 16 THE CONTACTS IN THIS DIAGRAM ARE IN A POSITION CORRESPONDING TO A STATION TUNED IN AUTOMATICALLY AND THE MECHANISM AT REST. THE UPPER SWITCH OPERATING ARM MUST REST JUST OVER THE UPPER EDGE OF THE BAKELITE CAM AS SHOWN IN THE FIGURE. ADJUST THE CONTACTS SO THAT THE STARTING, MUTE, AND A.F.C. CONTACTS ARE ALL OPEN. THE REVERSING CONTACT MUST BE IN THE BACK POSITION.

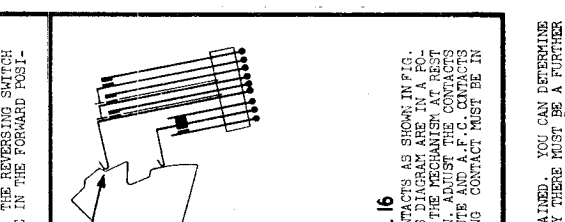

FIG. 15

HOW TO ADJUST SWITCH CONTACTS AS SHOWN IN FIG. 15 THE CONTACTS IN THIS DIAGRAM ARE IN A POSITION CORRESPONDING TO ONE BUTTON DEPRESSED AND THE PAWL ARM RESTING ON THE LOW SIDE OF THE CAM. A CLEARANCE OF 1/16 OF AN INCH MUST BE MAINTAINED BETWEEN THE UPPER SWITCH OPERATING ARM AS SHOWN IN THE FIGURE. ADJUST THE CONTACTS SO THAT THE STARTING, MUTE, AND A.F.C. CONTACTS ARE CLOSED. THE REVERSING CONTACT MUST BE IN THE BACK POSITION. THE OPERATING ARMS OF THE SWITCH SHOULD REST IN POSITIONS AS NEAR AS POSSIBLE TO THOSE SHOWN HERE. THE LOWER SWITCH OPERATING ARM MUST REST JUST OVER THE UPPER EDGE OF THE BAKELITE CAM OR IMPROPER OPERATION WILL RESULT.

IMPORTANT

IN ADJUSTING ALL SWITCH CONTACTS A DEFINITE CONTACT PRESSURE MUST BE MAINTAINED. YOU CAN DETERMINE THIS CONTACT PRESSURE AS FOLLOWS: AFTER THE CONTACT POINTS TOUCH INITIALLY THERE MUST BE A FURTHER MOVEMENT OF THE CONTACT ARMS OF AT LEAST 1/64 OF AN INCH. THIS TYPE OF "WIPING CONTACT" IS IMPERATIVE FOR GOOD OPERATION OF YOUR "MOTO-MATIC TUNER"

THE ILLUSTRATIONS SHOWN ON THIS PAGE APPLY ONLY TO EARLY PRODUCTION RECEIVERS HAVING SERIAL NUMBERS AS FOLLOWS:

MODEL 4688 - BELOW 934,302
MODEL 4788 - BELOW 939,000
MODEL 4799 - ALL CHASSIS

(For receivers having higher serial numbers see drawing on next page.)

©John F. Rider, Publisher

©John F. Rider, Publisher

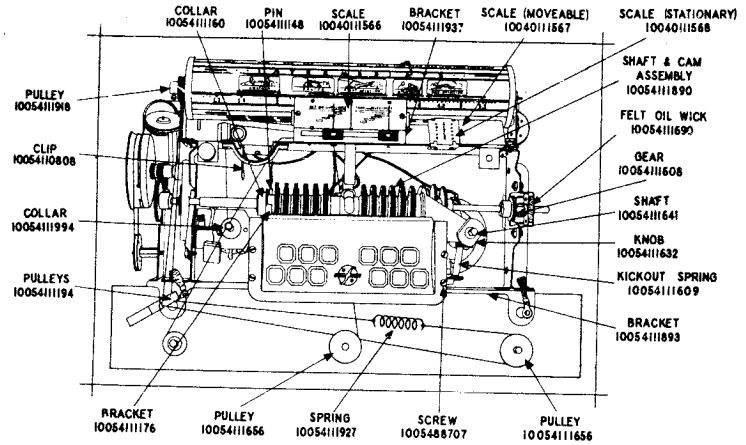

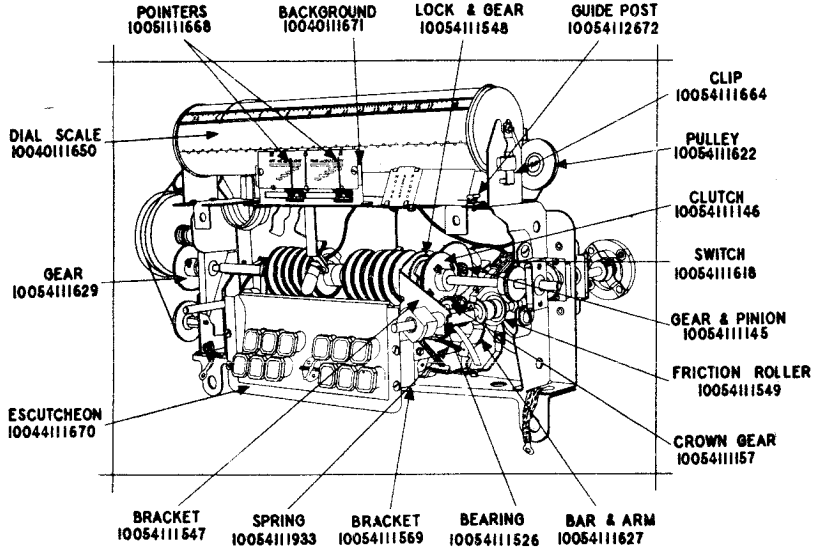

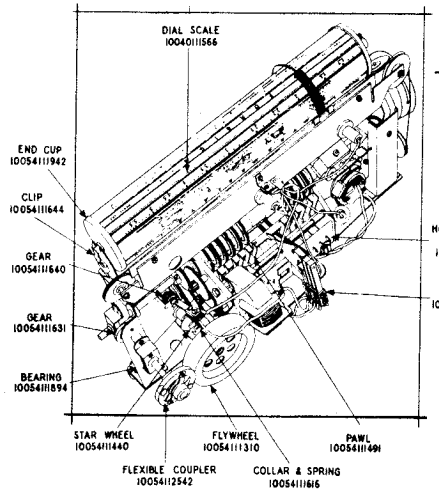

THE DIAL OR TUNER MECHANISM

PUSH BUTTON PARTS

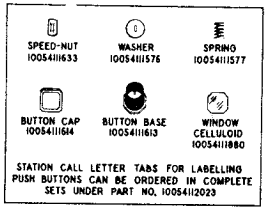

STATION CALL LETTER TABS FOR LABELLING PUSH BUTTONS CAN BE ORDERED IN COMPLETE SETS UNDER PART NO. 100541112023

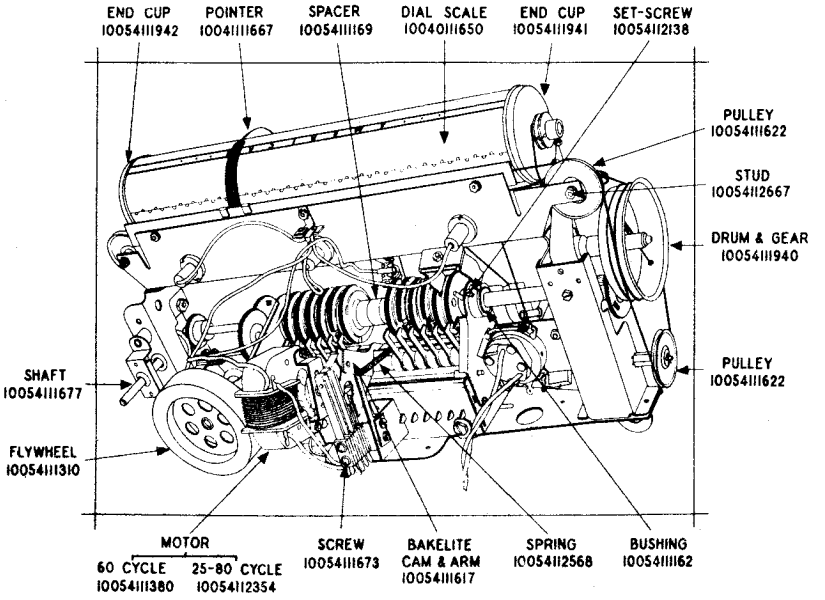

OPERATING FEATURES

Fidelity Rge. (±10DB)	30-7000 cycle
Tone control	4 position
Resonance Indicator	Tuning eye
Volume stabilizer	A.V.C. system
Tuning corrector	A.F.C. system
"Motor-Matic" tuner	Push button control

CHASSIS FEATURES

R. F. stages	one
Number of I.F. stages	two
Number of Cond. in gang	three
Antenna	Conv. or Doublet
Wave trap	465 KC
Combined selectivity & tone control	

MECHANICAL SPECIFICATIONS

OPERATING CONTROLS

1. Upper Left Knob.....Power Sw. & Volume
2. Lower Left Knob..Tone & Selectivity Control
3. Center Knob.....Mot.-Reg.-Phono
4. Upper Right Knob.....Stat. Selector
5. Lower Right Knob.....Band Switch

CONTROL OPERATION

Turning right;.....	Power on Vol. Inc.
Turning right.....	Bass to Brilliant
Turning right.....	Phono.-Reg.-Motor
Spinner Tuning.....	
Turning Right to Left.....	F-P-A

FAULTS—CAUSES—REMEDIES:—

POINTER DOES NOT MOVE WHEN BUTTON IS PUSHED IN

FAULT	PROBABLE CAUSE	REMEDY
(1) Motor hums but does not run	(a) Reversing contacts on back switch not closing.	(a) To correct this fault you must make a thorough check of all switch adjustments as explained under "General Switch Adjustment" and check carefully to see that the reversing contacts are set correctly when the mechanism is in the positions shown in figures 14 and 15.
	(b) Motor stalled due to mechanical overload and clutch not slipping.	(b) Such an overload may be caused by any one or a combination of the following: (1) binding of the dial pointer against the dial, dial frame, or cabinet. Also rough, rusty or bent pointer slide rail. (2) pointer drive cable too tight. (3) jammed or stuck guide pulleys (4) crossed dial cord on dial drum. (5) drive drum gear out of mesh. (6) misalignment or tight cam shaft bearings. (7) cam shaft sprung or bent. (8) collar on left end of cam assembly binding against left end bracket. (9) excessive friction between pawl and station selector cam due to rough or burred surfaces. (10) set-up crown gear assembly binding. (11) gang condenser drive gears out of mesh and binding. (12) tight, jammed or sticking gang condenser. The remedy for any of these faults is fairly obvious and no mention will be made here other then stating that a complete write up on how to restring any part of the dial cord drive is included in following pages of this service manual.
	(c) Defective motor.	(c) Replacement of motor necessary.
	(d) Low line voltage or improper frequency.	(d) Proper line voltage is imperative for operation of the tuner. A special universal motor may be obtained where the frequency of the power supply is other than 60 cycles; see the parts list at rear of manual.
(2) Motor runs but pointer does not move.	(a) Clutch slipping.	(a) This may be due to a mechanical overload or a defective clutch. First examine the clutch (see figure 12) to see that the horse shoe shaped spring has not been weakened or broken also see that no oil or grease is present (If grease is present wash surface clean with carbon tetrachloride). If the fault is due to a mechanical overload you should refer to fault (1) cause (b) for remedies. If the remedies given fail, replace the horseshoe shaped clutch spring. (Part No. 10054111138). Clutch Springs now supplied are somewhat heavier than those used on earlier sets. Later type clutch assemblies have the spring staked to the nub (see illustration). 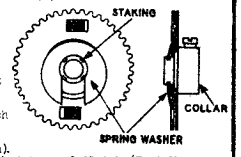 If desired such a staked type of Clutch (Part No. 10054111146) can be installed as follows. 1. Remove the L shaped horizontal brace on the back of the Dial Frame. This is the part supported by the brackets screwed to the sides of the chassis. 2. Take the Side Switch Mounting Screws out and swing the switch out of the way. 3. Drive out the pin through the Friction Roller Assembly. Pull out the pin in the Star Wheel. Loosen the set screws in the Star Spring Collar and Flywheel. The Tuning Shaft can now be pulled out. (NOTE that there is a groove around the tuning shaft. The set screw of the Star Spring Collar fits into this groove, thus fixing the lateral position of the shaft with respect to the End Bracket.) 4. Take the Set-up Knob off. Remove the Tuning Shaft Bearing and pull the Sleeve and Set-up Gear out of the End Bracket. 5. Take the Retaining Ring off the Set-up Crown Gear Stud and remove the Crown Gear Assembly. 6. Remove the Right End Bearing and Bracket 7. Take the Knurled Crown Gear off the Extension Shaft. 8. Loosen the Clutch Set Screw, disassemble the Clutch and slide the Collar and Gear Sections off the Cam Shaft to the right.
	(b) Pointer drive gear slipping on shaft or out of mesh.	(b) Tighten set screw in gear or remesh gears.
	(c) Pointer loose on cord.	(c) Tighten clips on pointer slider.
	(d) Pointer sticking on guide rail due to rust.	(d) Clean guide rail carefully with piece of emery cloth and oil.
(3) Motor does not hum and tuner does not move with button in.	(a) Power contacts on side switch not closing.	(a) Adjust power contact as explained under "General Switch Adjustment", and adjust carefully to see that power contacts are set correctly with the mechanism positions shown in figures 13 and 16.
	(b) Starting contacts on back switch not closing.	(b) Adjust starting contacts on back switch as described in, "General Switch Adjustment", and check carefully to see that starting contacts are set correctly for the mechanism position shown in figures 14 and 15.
	(c) Loose silver contact on switch contact blade.	(c) Replace entire switch.
	(d) Bakelite back switch operating cam binding on contact arms, or out of position.	(d) If the bakelite cam binds against the switch operating arms it will indicate that the cam is either rough or the tension in the spring at its side is insufficient. Cut off several turns of this spring to increase tension and then replace the spring.
(4) Pointer stops at wrong point.	Improper setting up of mechanism. Mechanism not locked up properly.	Set up mechanism again, being careful to tune to stations, using tuning eye to determine exact set-up position. In locking the mechanism be sure to force the set-up knob all the way to the left counter-clockwise until you are positive the knob will not turn further.
(5) Pointer stops at proper point but (a) No signal is heard.	(a) Mute contacts on back switch not opening: (No noise will be heard in this case)	(a) See paragraph on "General Switch Adjustment", and check carefully to see that the mute contacts are set correctly with the mechanism in the positions shown in figures 14 and 15.
	(b) Tuning backlash.	(b) For remedies see fault 12 which covers in detail all possible causes.
	(c) Gang condenser drive gears out of mesh or slipping on shaft.	(c) Re-mesh gears and tighten set screw.
	(d) Flexible coupling slipping on shaft.	(d) Tighten set screw for flexible coupler.
	(e) Station not broadcasting or too weak as in daytime or during period of fading.	(e) Be sure aerial is adequate. Do not attempt to tune this station until reception is suitable.
(b) Signal is not heard clearly.	(a) A.F.C. contact on back switch not opening.	(a) Check A.F.C. contacts with the mechanism in the position shown in figure 16. See that A.F.C. contacts are open in this position.
	(b) A.F.C. not functioning.	(b) Change discriminator or control tube, re-align A.F.C. system, lastly, make check of entire system.
	(c) Weak signal or no aerial.	(c) Do not attempt to set buttons to weak signal stations. Install adequate antenna.
(c) Wrong station comes in.	(a) Desired signal off, weak or faded.	(a) Set up button to another station if desired or wait for next broadcast period of station before attempting to use this button. If the signal is very weak or fading do not attempt to set up button for that station.
	(b) Not set-up properly.	(b) Reset up for the particular station in question.
	(c) Set off calibration.	(c) For incorrect calibration see fault 13 which itemizes in detail the causes for this miscalibration.
(d) Motor continues to run.	(a) Pawl doesn't fall far enough into the station selector cam to cut power off.	(a) It is probable that the starting contacts are not opening properly, i.e. before the pawl has fallen as far into the cam notch as it should. Check switch contact adjustments as described under, "General Switch Adjustment". Burrs on the pawl or cam will also aggravate this condition. Anything that makes the bar carrying the bakelite cam operate stiffly should be corrected also.
	(b) Starting contacts on back switch not adjusted properly.	(b) Check starting contacts with mechanism in position shown in figure 16 to see that starting contacts are open with mechanism at rest. Also, read, "General Switch Contact Adjustments".

©John F. Rider, Publisher

SEARS ROEBUCK & CO.

MODELS 4688,4788,4799
Chassis 100,159
Tuner Faults and Remedies
Part 2

FAULT	PROBABLE CAUSE	REMEDY
(6) Pointer stops at different place each time for a certain button. (continued on next page)	(a) Mechanism not locked up tight.	(a) Reset button, being sure to lock mechanism tightly by forcing set-up knob counter-clockwise until you are sure that the knob will not turn further.
	(b) Dial pointer slipping on cord.	(b) Tighten clips holding dial cord to pointer slider
	(c) Left end bracket bearing loose.	(c) Re-tighten bearing bracket mounting bolts.
	(d) Pointer drive gears slipping out of mesh or slipping on shaft.	(d) Re-set pointer drive gears so that they mesh properly and tighten their set screws firmly so they will not slip.
	(e) Loose set screws.	(e) Re-tighten all set screws to insure against slipping.
(7) Pointer stops off station occasionally.	(a) Pointer back-lash, (Note, pointer back-lash will cause apparent rather than actual mis-tuning.)	(a) Check to see that back-lash is at a minimum at the pointer drive gear on the left side of the mechanism. Also, see that bearing bracket is tight, not moving, which would also cause apparent back-lash.
	(b) Pawl does not fall far enough into station selector cam.	(b) Starting contacts opening too soon. Check switch contact adjustments. Check for burrs on pawl or cam.
(8) Pointer goes to end of dial and motor stalls and hums, or continues to run by slipping the clutch.	(a) Station selector cam turned around beyond its normal operating range.	(a) First unlock cams and then turn station selector cam around so that notch faces pawls.
	(b) Reversing contacts on back switch not adjusted properly.	(b) Check switch contact adjustment with mechanism in position shown in figure 16 and also read paragraph on, "General Switch Adjustments".
	(c) Bakelite cam binding on contact arm, or out of position.	(c) Check bakelite cam for rough spots. Increase spring tension of side operating spring for bakelite cam by clipping off several turns.
(9) Motor continues to operate, moving the pointer back and forth over a short distance after tuning to the approximate frequency to which the button is set.	(a) Reversing contacts on back switch are not adjusted properly - set too close.	(a) Since the reversing contacts are set too close the slightest movement of the operating arm will cause the motor to reverse, therefore the switch contact arms must be spread slightly in order that small movements of the center arm will not cause motor to reverse or "hunt".
(10) Motor starts before button is pushed in far enough to catch. Motor starts in wrong direction then corrects itself as button is pushed the rest of the way in.	(a) Side switch, power contacts are being closed too soon.	(a) Read paragraph on, "General Switch Adjustment", and check to see that power contacts make contact after all of the rear switch contacts have been made or button has been pushed all the way in.
(11) Intermittent operation of motor, lights, etc.	(a) Insufficient contact pressure or dirty contacts on back or side switch.	(a) Check all switch contacts for proper contact pressure. This may be done by noting that the contact is first made and then there is a continued movement of the contact arm in which the first contact wipes the second and both contacts move backward about 1/64 of an inch.
	(b) Loose silver contact on switch blade.	(b) Repair if possible; or, replace entire switch.

FAULT	PROBABLE CAUSE	REMEDY
(12) Tuning back-lash (Note the high tuning ratio greatly exaggerates the effect of most of these conditions)	(a) Clutch slips	(a) This may be due to mechanical overload or a defective clutch. First examine the clutch, (see figure 12) to see that the horse shoe shaped spring has not been weakened or broken, also, see that no oil or grease (if grease is present wash surfaces clean with carbon tetrachloride). If fault is due to mechanical overload you should refer to fault 1, cause (b) for remedies.
	(b) Play between gang condenser drive gears due to insufficient compression in thrust spring in flexible coupling.	(b) Release set screw on flexible coupler and push auxiliary shaft forward until drive gears mesh properly. Retighten set screw.
	(c) Play between gears due to improper setting of anti-back-lash spring.	(c) Check to see that separate sections of the gears having anti-backlash spring ar spread against the spring tension before they are meshed in order that backlash will not occur.
	(d) Play between gear and stud.	(d) See that the stud is not shaky or loose in its mounting and see that the gear is mounted on its shaft snugly so that "wabble" does not take place.
	(e) Gang condenser sways.	(e) Mount more securely by tightening gang condenser mounting bolts.
	(f) Loose set screw in coupling or gear.	(f) Retighten all set screws. Check to see that gears are not slipping on shaft.
	(g) Loose or worn bearings.	(g) Tighten bearing mounting plates. Replace worn bearings.
	(h) Friction roller rotates slightly relative to tuner shaft.	(h) Replace the pin holding the friction roller on the shaft using a larger pin.
(13) Calibration incorrect.	(a) Dial pointer or gang condenser drive gears jump teeth, slip on cam shaft or are out of mesh.	(a) Check to see that gang condenser drive gears mesh properly. Also, see that set screws of these gears are tightened properly so that slipping cannot occur.
	(b) Dial pointer slips on dial cord.	(b) Tighten dial cord clips on pointer slider so that slider will not slip along cord.
	(c) Left end bearing bracket loose.	(c) Retighten mounting bolts for bearing bracket.
	(d) Excessive pointer back-lash.	(d) Tighten dial cord by shortening slightly and retying to tension spring inside of drum. Also, check drive gear on left side of mechanism to see that backlash is not occurring.

BUTTON DOES NOT STAY IN OR DOES NOT RELEASE

FAULT	PROBABLE CAUSE	REMEDY
(14) Button will not stay in when pushed in.	(a) Kickout pointer tip improperly adjusted.	(a) Adjust the tip of the kickout bar so that a key will be held in place when pushed in and the adjustable tip just touches a valley in the star wheel.
	(b) Kickout spring bent out too far.	(b) Adjust kickout spring to position shown in figure 12 with mechanism in manual tuning position.
(continued on next page)	(c) Insufficient tension in key stop bar return spring.	(c) Clip off several turns of this spring to increase its tension and replace. See figure 12.

©John F. Rider, Publisher

FAULT	PROBABLE CAUSE	REMEDY
	(d) Jammed or stuck key stop bar.	(d) Check to see that the adjustable tip of the key stop bar is not stuck on the side of the star wheel, thus causing it to bind or stick.
	(e) Star wheel stuck or not moving freely on tuning shaft.	(e) The wire spring engaging the star wheel may be broken or severely bent; Replace. Burrs between star wheel and tuning shaft may also cause binding.
	(f) Bent or sprung key stop bar.	(f) In this instance replace the key stop bar.
(15) Depressed button does not release when another button is pushed in.	(a) Kickout tip jams against star wheel.	(a) Check to see that end of kickout tip is not catching on tip of star wheel.
	(b) Stuck or jammed pawl.	(b) A pawl may be jammed so tightly into its slot in a cam that it will not release of its own accord. Release the pawl by pulling it out of the slot and check to see that it will not stick when operated again. If it sticks again use sand paper or an oil stone to remove burrs which have evidently caused sticking.
	(c) Stuck or jammed key.	(c) The key may be bent thus causing jamming. Straighten and align key.
(16) Depressed button will not release when tuning knob is turned.	Kickout tip not engaging star wheel.	Adjust the kickout tip so that it will touch the bottom of the valley of the star wheel when a button is pushed in.

DIFFICULTIES OCCURRING DURING SET UP BUT NOT IN NORMAL OPERATION

FAULT	PROBABLE CAUSE	REMEDY
(17) Button does not release when set up knob is worked in or out.	Kickout spring set too far from kickout arm.	Check to see that kickout spring is in position shown in figure 12 when set is on manual tuning.
(18) Mechanism locks up during setting up of a station.	Defective locking mechanism.	Put some oil between the cams and friction washers. If you are sure that you have forced the set-up knob to a maximum clockwise position, and the mechanism still locks up, it will be necessary to replace parts of the locking mechanism.

MANUAL TUNING DIFFICULTIES

FAULT	PROBABLE CAUSE	REMEDY
(19) Set tunes very broadly.	"Moto" switch in "Motor" position.	"Moto" switch should be turned to "Manual" to cut out AFC action.
(20) Tuning knob sticks and catches in going from "automatic" to "manual" tuning.	(a) Burrs on the tip of kickout arm, or star-wheel.	(a) Use piece of emery cloth to carefully clean tip of kickout arm and any burrs which might remain on the teeth of the star wheel.
	(b) Adjustable tip of kickout arm set improperly.	(b) Adjust the tip on the kickout arm so that it will just contact a valley in the star wheel when a button is depressed and when all buttons are released be sure the tip of the star wheel does not contact the adjustable tip on the kickout arm.
(21) Pointer does not move when tuning knob is turned although works OK in automatic position.	(a) Oil or grease on rubber drive ring, on friction wheel.	(a) Clean the rubber drive ring with carbon tetrachloride until it is free from all oil or grease.
	(b) Jammed bar and arm assembly.	(b) If possible straighten the bar and arm, or; if severely bent replacement will be necessary. (continued on next page)
	(c) Insufficient tension in bar and arm assembly return spring.	(c) Clip off several turns of the return tension spring of the bar and arm assembly to increase the tension.
	(d) Bent tuning shaft.	(d) Carefully examine tuning shaft to see if it is bent. If found to be bent it will be necessary to replace the tuning shaft.

MISCELLANEOUS TUNER TROUBLES

FAULT	PROBABLE CAUSE	REMEDY
(22) Dial and automatic lights go out and set is silenced momentarily when a button is pushed in or released.	(a) Both reversing contacts on back switch close at once and short six volt winding of the power transformer.	(a) Examine reversing contacts to see that arms are not spaced too closely and also to see that when reversing contact breaks in one direction it makes a clean break before making contact in the other direction. If the center arm of the reversing switch is still in contact with the front arm when the rear contact is made a momentary short circuit will result.
	(b) Operating arm of the side switch grounding against friction roller assembly at point indicated by arrow and note in figure 12. This will cause momentary short circuit each time a button is pushed.	(b) Bend the tip of the switch operating arm upward slightly so that it will not contact the metal on the friction roller assembly which is probably causing the short circuit.
(23) Gears noisy during automatic tuning.	(a) Motor pinion and first reduction gear not meshing properly.	(a) Check to see that gears are meshed properly.
	(b) Too much compression in the anti-backlash springs in gears.	(b) Unmesh the gear, and rotate one of the gear sections with respect to the other so that the compression in the anti-backlash spring between the gears is reduced slightly. Then remesh the gears.
	(c) Burrs, bent teeth, and other irregularities on gears, especially those that operate at higher speeds.	(c) Inspect gears for such irregularities and if necessary, replace.
(24) Black ground lead near 6H6 tube under chassis heats up and smokes.	(a) Operating arm of side switch grounded against friction roller at point indicated by note in figure 12.	(a) Repair the fault which is causing the ground at the point indicated.
	(b) Tuning shaft bearing stop out of place and grounding power blade of side switch.	(b) Check to see that bearing stop is not out of its clip and sliding back on the tuning shaft thus causing a short. If this is true pull the bearing stop forward and clip it into its socket in the mounting bracket.
	(c) Any short from the 6 volt power line on the tuner mechanism to ground.	(c) Locate short.
(25) Slight hum is heard when motomatic switch is in the "Motor" position.	Untalance in A.F.C. control circuits due to 6H6-G discriminator tube.	Replace 6H6-G discriminator tube which is causing difficulty.
(26) Signals are heard when tuning from one station to another automatically.	Mute contacts on back switch not closing making poor contact.	Check mute contacts with mechanism in positions shown in figure 14 and 15.
(27) Set noisy electrically in starting and stopping during automatic tuning.	Set used with insufficient antenna or mute contacts on back of switch closing too late and opening too soon.	Read paragraph on "General Switch Adjustments" and install adequate antenna.
(28) Mechanism reaches a definite stop before pointer reaches end of dial.	Cam assembly stop pin and the gang condenser stop are not set so they will reach their respective stop at approximately the same time.	Release the set screw on the flexible coupler, close the gang condenser then proceed to turn tuning knob clockwise until cam assembly stop in on left side of the mechanism is touching its front stop, then retighten set screw being sure that the gears at the end of the auxiliary shaft are properly meshed.

©John F. Rider, Publisher

©John F. Rider, Publisher

PARTS LIST-SOURCE NO. 100

PRICES SUBJECT TO CHANGE WITHOUT NOTICE.

MOTO-MATIC TUNER PARTS

Part Number	Description	Selling Price Each
10054111700	Automatic tuning unit only less dial and drive mechanism	35.00
10054112734	Automatic tuning unit complete with dial and drive mechanism	56.00
10054111627	Bar and arm assembly	.60
10054111526	Bearing - on tuning shaft	.50
10054111176	Bracket - left side of cam shaft	.20
10054111547	Bracket - with studs (right side)	.90
10054111569	Bracket - push button escutcheon mtg.	.15
10054111162	Bushing - left end of cam shaft	.18
10054111576	Button washer - in push button	.005
10054111577	Button spring - in push button	.005
10054111613	Button - push button base	.10
10054111614	Button cap - for push button	.08
10054111880	Button window - celluloid per dz.	.07
10054111633	Button speed - nut - inside push button	.02
10054112023	Call letter tabs - for labelling push buttons	.60
10054111168	Cams - station selector	.50
10054111617	Cam - bakelite for master switch operation (with arm)	.62
10054112563	Cam - bakelite, less operating arm, used on Model 4788-with serial Nos. above 939,000 Model 4688-with serial Nos. above 934,302 Model 4799-all chassis.	.10
10054111146	Clutch - bushing, spring and gear	.55
10054111160	Collar - retaining, (less set screw) left side of cam shaft	.15
10054111161	Collar - retainer for pawls	.10
10054111616	Collar & spring - for star wheel	.36
10054111882	Collar - for spring locking cam	.08
10054111137	Drive ring - rubber	.05
10044111565	Escutcheon - around push buttons(on cabinet)	1.76
10044111670	Escutcheon - push buttons (metal)	1.20
10054111310	Flywheel - with set screws	1.25
10054111549	Friction roller - on rear end of tuning shaft	.30
10054111402	Friction wheel - with rubber ring	.66
10054111145	Gear - and pinion (reduction)	.45
10054111157	Gear - crown & pinion for "setting up"	.75
10054111640	Gear - for releasing & setting up (on tuning shaft	.35
10054112733	Housing - with keys	5.00
10054112522	Key stop - kickout assembly	.50
10054111632	Knob - for setting-up	.31
10054111408	Lock - saw tooth (adjacent to cam)	.40
10054111548	Lock - saw tooth with gear	.70
10054111380	Motor - 6 volt - 60 cycles	6.15
10054112354	Motor - 6 volt, 25 to 80 cycles	6.75
10054111491	Pawl and bushing - single unit	.20
10054111887	Pawls & shaft - assembly	3.00
10054111148	Pin - cam shaft, left side	.05
10054111409	Pin - for friction roller	.04
10054111410	Pin - in star wheel	.04
10054111411	Pin - cam shaft - right side	.04
10054111883	Pin - inside or lock	.03
10054111152	Retaining ring - for idler gear	.02
10054111153	Retaining ring - for crown gear	.02
10054111557	Retainer - for left side of pawl shaft(brass)	.03
1005475032	Screw - #4 for kickout tip per C	.50
1005485040	Screw - #6 hex. head for mtg. frame per C	.35
1005488707	Screw - binder head for mtg. push button escutcheon per dz.	.06
10054111673	Screws - (through master switch)	.01
1005485827	Set screws - 8/32 sq. hd. on clutch collar	.02
10054111403	Set screw - 8/32, fluted, head	.12
10054111554	Set screw - #4 headless (for pawl collar)	.01
10054111588	Set screw - for collar & spring mtg. (6/32)	.11
10054112138	Set screw - 8/32 round head	.03
10054111166	Shaft - for pawls	.20
10054111405	Shaft - for key stop bar	.18
10054111406	Shaft - for bar and arm assembly	.18
10054111641	Shaft - tuning	.35
10054111890	Shaft & cam - assem. (with right end bracket)	12.50
10054112630	Socket & bracket - for electrical connections to mechanism	.75
10054111169	Spacer - between cams	.11
10054111440	Star wheel - on tuning shaft	.25
1005485815	Spring - between reduction gear sections (next to motor)	.02
1005489086	Spring - between sections of dial drive gear on left side of mechanism	.01
10054111138	Spring - horseshoe shaped (on clutch)	.02
10054111151	Spring - key stop shaft retainer	.01
10054111528	Spring - coil (inside of lock)	.01
10054111552	Spring - flat, with tongue, on lock	.04
10054111555	Spring - for key and pawls	.06
10054111609	Spring - kickout	.05
10054111933	Spring - coil, keystop return	.03
10054112465	Spring - between reduction gear sections (next to cam shaft)	.01
10054112568	Spring - bakelite cam return	.05
10054111618	Switch - side; two contact	.37
10054111844	Switch - at rear; used on Model 4688 with serial Nos. below 934,302 Model 4788 with serial Nos. below 939,000	1.30
10054112564	Switch - at rear; used on Model 4688 with serial Nos. above 934,302 Model 4788 with serial Nos. above 939,000 Model 4799 all chassis	1.25
10054112521	Tip - adjustable for key stop & kickout arm	.06
1005476999	Washer - lock; for kickout tip per C	.50
1005477113	Washer - flat for kickout tip per C	.50
10054111553	Washer - spring retainer	.02
10054112483	Wrench - for fluted hd. set screws #6	.07
10054112484	Wrench - for fluted hd. set screws #8	.07
10054117468	Spring bender - for sw. adj.	.75

DIAL DRIVE AND MISCELLANEOUS PARTS

PRICES SUBJECT TO CHANGE WITHOUT NOTICE

Part Number	Description	Selling Price Each
10040111671	Background - (white) vol. & tone indicator	.07
10054111601	Bearing - self aligning	.12
10054111692	Bearing retainer - plate; copper	.06
10054111894	Bearing assembly - self aligning; supports gang extension shaft	.40
10054111939	Bearing plate and stud - for left side drive and gear support	.56
10054112629	Belt - metal; for range switch drive	.05
1005475153	Bolt - chassis mtg. (10-32 x 3/4")	.005
1005477969	Bolt - chassis mtg. (1/4-20 x 1-3/8")	.06
1005488831	Bracket - range switch shaft support(under chassis)	.02
10054111669	Bracket - for escutcheon mtg.	.15
10054111684	Bracket - for motor-Reg.-Phono mtg. strip	.07
10054111893	Bracket and mounting plate - for tuner mechanism	3.10
10054111937	Bracket - for mtg. vol. & tone indicator	.50
10054111892	Bushing - hard rubber; tuner mechanism mtg. to chassis	.02
10055111908	Cable & plug - tuning eye	1.10
1005489912	Clip - grounding for tube base	.02
10054110808	Clip - for tuning eye support	.14
10054111664	Clip - right hand end cup retaining	.10
10054111658	Clip - for pulley retaining	.01
10054111944	Collar & Pin - on vol. cont. shaft	.12
10054110782	Cord - for band ind. Supplied 55 in. reg. for Band indic. 18 in. reg. for vol. indic. 20 in. reg. for tone indic. 22 in. reg. for motor indic. Lgths in 6Ft. per ft.	.04
10054111302	Cord - dial drive (6 ft. lengths)	.30
10054111973	Cushion - rubber mtg.	.06
10054111940	Drum & gear - dial cord drive	.52
10054111941	End cup - left side of dial scale	.22
10054111942	End cup - right side of dial scale	.22
10044111558	Escutcheon - dial	4.90
10054111690	Felt - oil wick for bearing	.05
10054112542	Flexible coupler - for gang to unit cplg.	.75
10054111608	Gear - knurled (right side of cam shaft)	.20

MODELS 4688,4788,4799
Chassis 100.159
Parts List

SEARS ROEBUCK & CO.

Part Number	Description	Selling Price Each
10054111629	Gear - dial drive (left side of cam shaft)	.52
10054111631	Gear - crown; knurled on extension gang shaft	.36
10039111560	Knob - tuning	.24
10039111561	Knob - volume	.24
10039111562	Knob - tone	.24
10039111563	Knob - motor - phono - regular	.17
10039111564	Knob - band switch	.17
10041111667	Pointer - main dial	.19
10041111668	Pointer - volume indicator or tone indicator	.12
10054110418	Plug button, chrome plate	.08
10054110496	Plug - speaker (4 prong)	.12
10054112832	Plug - for mechanism connecting (8 prong)	.36
10054111622	Pulley - dial cord drive	.25
10054111656	Pulley - on range switch or motor-phono shafts	.37
10054111918	Pulley - on left end of dial drum	.24
10054111942	Pulley, idler - for band indicator drive	.12
10054112628	Pulley, idler - for range swith (under chassis)	.20
10054844214	Retaining ring - for shafts or dial drum	.02
10040111566	Scale - for vol. & tone indicator	.16
10040111567	Scale - motor, regular, phono (movable)	.10
10040111568	Scale - motor, regular, phono (stationary)	.27
10054488707	Scale - dial (celluloid roll)	1.80
	Screw - binder hd. for mtg. push button escutcheon	per dz. .06
10054111116	Screw - #5 x 5/8; mechanism mtg. (tuner)	.02
10054485827	Set screw - for range switch pulley mtg.	.02
10054112138	Set screw - 8/32 slotted head	.03
10054111677	Shaft - extension(between gang cond. & unit)	.10
10053881161	Shield - tube (short section)	.08
10053881164	Shield cap - tube, grid type	.06
10053881165	Shield cap - for tubes (plain)	.06
10053889911	Shield - tube base	.04
10054111065	Sleeve - (felt) for tuning eye	.03
10018854277	Socket - octal base	.15
10054111008	Socket - push button lamp	.12
10018110501	Socket - 4 prong (for spkr.)	.16
10054111985	Socket - lamp	.26
10054111090	Spacer - steel; mechanism mtg. to chassis	.02
10054111570	Spacer - hard rubber; for tuner mechanism mtg. to chassis	.02
10054111862	Spring - drive cord tension	.03
10054111927	Spring - indicator drive tension	.06
10054112544	Spring - between flexible coupler	.01
10054112872	String guide - post	.05
10054112866	Stud - pulley mtg. (right side or dial)	.06
10054112867	Stud - for pulley mtg. (left side)	.10
10054485086	Terminal strip - G.D.A.	.20
10054111581	Terminal strip - phono	.13
10054437568	Washer - embossed (for mtg. electrolytic)	.05
10054489027	Washer - spring type (for range shaft)	.01
10054489747	Washer - paper; behind knobs	.01
10054112262	Washer - flat steel mtg. (15/16" O.D.)	.02
10054111672	Washer - flat steel mtg. (7/8" O.D.)	.01
10054111972	Washer - extension and top (for mtg.)	.05
10042111559	Window - celluloid for dial escutcheon	1.50

ELECTRICAL PARTS

Part Number		Description	Selling Price Each
10031111079	L1	Coil - wave trap	1.20
10028111062	L2	Coil - antenna (short-wave)	.90
10028111068	L3	Coil - antenna (police)	.80
10028111103	L4	Coil - antenna (broadcast)	1.82
10028111063	L5	Coil - R.F. (short-wave)	.90
10028111059	L6	Coil - R.F. (police)	1.00
10028111056	L7	Coil - R.F. (broadcast)	1.25
10028111064	L8	Coil - Oscillator (short-wave)	.85
10028111060	L9	Coil - oscillator (police)	1.00
10028111480	L10	Coil - compensating inductance	.30
10028111057	L11	Coil - oscillator (broadcast)	1.05
10014112418	L12	Choke - filter	1.30
10019088265	C1	Condenser - mica, 2100 mmfd.	.35
10017111078	C2-C3-C4	Condenser - trimmer (3 section) for R.F. or antenna (all bands)	.75
10019111117	C5	Condenser - lowloss .05 mfd. 150 volt	.35
	C6	Condenser - paper .1 mfd. 300 volt	.25
	C7	Condenser - paper .1 mfd. 400 volt	.25
10017111076	C8-C9-C10	Condenser - trimmer (3 section) for R.F. or antenna (all bands)	.75
10019111123	C11	Condenser - mica, 7750 mmfd. (5%)	.85
10019111117	C12	Condenser - lowloss .05 mfd. 150 volt	.35
10019111342	C13-C14	Condenser - mica, 200 mmfd. (5%)	.18
10019111342	C15	Condenser - mica, 200 mmfd. (5%)	.18
10019111342	C16	Condenser - mica, 200 mmfd. (5%)	.18
10019111342	C17-C18	Condenser - paper .05 mfd. 150 volt	.25
10019111342	C19	Condenser - paper .05 mfd. 150 volt	.25
10019985061	C20	Condenser - mica 51 mmfd.	.15
10019985061	C21	Condenser - paper .01 mfd. 400 volt	.25
10017111069	C22-C23-C24	Condenser - trimmer (3 section) for oscillator (all bands)	.75
10017111115	C25	Condenser - pad (single section)	.63
10019985394	C26	Condenser - paper .01 mfd. 400 volt	.25
	C27	Condenser - mica 510 mmf.	.25
10019985539	C29-C30	Condenser - paper .1 mfd. 150 volt	.25
	C31-C32	Condenser - mica 280 mmfd. 400 volt	.20
	C33	Condenser - paper .02 mfd. 400 volt	.25
10019111910	C34	Condenser - mica, 150 mmfd. (5%)	.18
10019111342	C35	Condenser - mica, 200 mmfd. (5%)	.18
10019985785	C36	Condenser - mica, 110 mmf.	.20
10019111342	C37	Condenser - mica, 200 mmfd. (5%)	.18
10019985785	C38-C39-C40	Condenser - mica, 110 mmf.	.20
	C41	Condenser - paper .05 mfd. 200 volt	.25
	C42	Condenser - paper .02 mfd. 400 volt	.25
	C43	Condenser - .007 mfd. 600 volts	.25
	C44	Condenser - paper .05 mfd. 200 volt	.25
10019985539	C45	Condenser - mica 280 mmfd. 400 volt	.20
	C46	Condenser - paper .02 mfd. 400 volt	.25
	C47	Condenser - paper .01 mfd. 400 volt	.25
	C48	Condenser - paper .02 mfd. 400 volt	.25
10020110552	C49	Condenser - electrolytic 12 mfd. 150 volt	1.35
10019989976	C50	Condenser - shielded .012 mfd. 1000 volt	.40
10020988679	C51	Condenser - electrolytic 16 mfd. 450 volt	1.10
10020989987	C52	Condenser - electrolytic 30 mfd. 450 volt	1.60
10020111469	C53	Condenser - electrolytic 16 mfd. 450 volt	1.30
	C54	Condenser - paper .004 mfd. 750 volt	.24
	C55	Condenser - paper .02 mfd. 400 volt	.25
10020110377	C56	Condenser - paper .1 mfd. 400 volt	.25
	C57	Condenser - electrolytic 10 mfd. 25 volt	.60
	C58	Condenser - paper .1 mfd. 400 volt	.25
10020111689	C59	Condenser - electrolytic 20 mfd. 25 volt	1.20
10019111040	C60	Condenser - 3 mmfd. (wire)	.10
10019111122	C61	Condenser - mica 3580 mmfd. (3%)	.48
10019854467	C62	Condenser - mica 1370 mmfd. (3%)	.30
10013111073		Condenser - variable gang	6.25
10054855221		Connector - ground	.01
10049858398		Lamp - dial - 6 to 8 volt .25 amps.	.15
10049110829		Lamp - 6.3 volt - .25 amps.(over push buttons)	.15
	R1	Resistor - carbon 100,000 ohm 1/4 watt (20%)	.12
10022110553	R2	Resistor - carbon 220,000 ohm 1/4 watt (20%)	.12
	R3	Resistor - carbon 100,000 ohm 1/4 watt (20%)	.12
	R4	Resistor - carbon 100 ohm 1/4 watt	.12
	R5	Resistor - carbon 100,000 ohm 1/4 watt (20%)	.12
	R6	Resistor - carbon 22,000 ohm 1/4 watt	.12
	R7-R8	Resistor - carbon 47,000 ohms 1/4 watt	.12
	R9	Resistor - carbon 470,000 ohms 1/4 watt	.12
	R10	Resistor - carbon 3.3 megohm 1/4 watt	.12
10022111685	R11	Resistor - wire wound 280 ohms 1/2 watt (5%)	.15
	R12	Resistor - carbon 470 ohm 1/4 watt	.12
	R13-R14	Resistor - carbon 470,000 ohms 1/4 watt	.12
	R15	Resistor - carbon 1 megohm 1/4 watt	.12
10021111417	R16A R16B R16C	Resistor - bleeder: Section A 5600 ohms Section B 5600 ohms Section C 1500 ohms	1.15
	R17	Resistor - carbon 1 megohm 1/4 watt	.12
	R18-R19	Resistor - carbon 100,000 ohm 1/4 watt (10%)	.12
	R20-R21	Resistor - carbon 470,000 ohms 1/4 watt	.12
	R22	Resistor - carbon 1 megohm 1/4 watt	.12
	R23	Resistor - carbon 47,000 ohms 1/4 watt	.12
10024111533	R24	Volume Control - 1 megohm(with on-off switch)	1.45
	R25	Resistor - carbon 2,200 1/4 watt	.12
	R26	Resistor - wire wound 33 ohm 1 watt	.12
	R27	Resistor - carbon 330,000 ohm 1/4 watt (10%)	.12
	R28	Resistor - carbon 100,000 ohm 1/4 watt (10%)	.12
	R29-R30	Resistor - carbon 33,000 ohm 1/4 watt	.12
	R31	Resistor - carbon 2,200 ohm 1/4 watt	.12
	R32	Resistor - carbon 33,000 ohm 1/4 watt	.12
	R33	Resistor - wire wound 250 ohm 2 watt	.20
10022111686	R34-R35	Resistor - 33 ohm 1/2 watt	.12
10054111111		R.F. unit - coils, range switch, gang and trimmers - complete (Model 4688 only)	25.00
10058290		Speaker - dynamic (12") (Model 4788 only)	11.80
10058291		Speaker - dynamic (12") (Model 4788 only)	11.80
10058292		Speaker - dynamic (10") (Models 4799 or 4788 only)	10.50

©John F. Rider, Publisher

© John F. Rider, Publisher

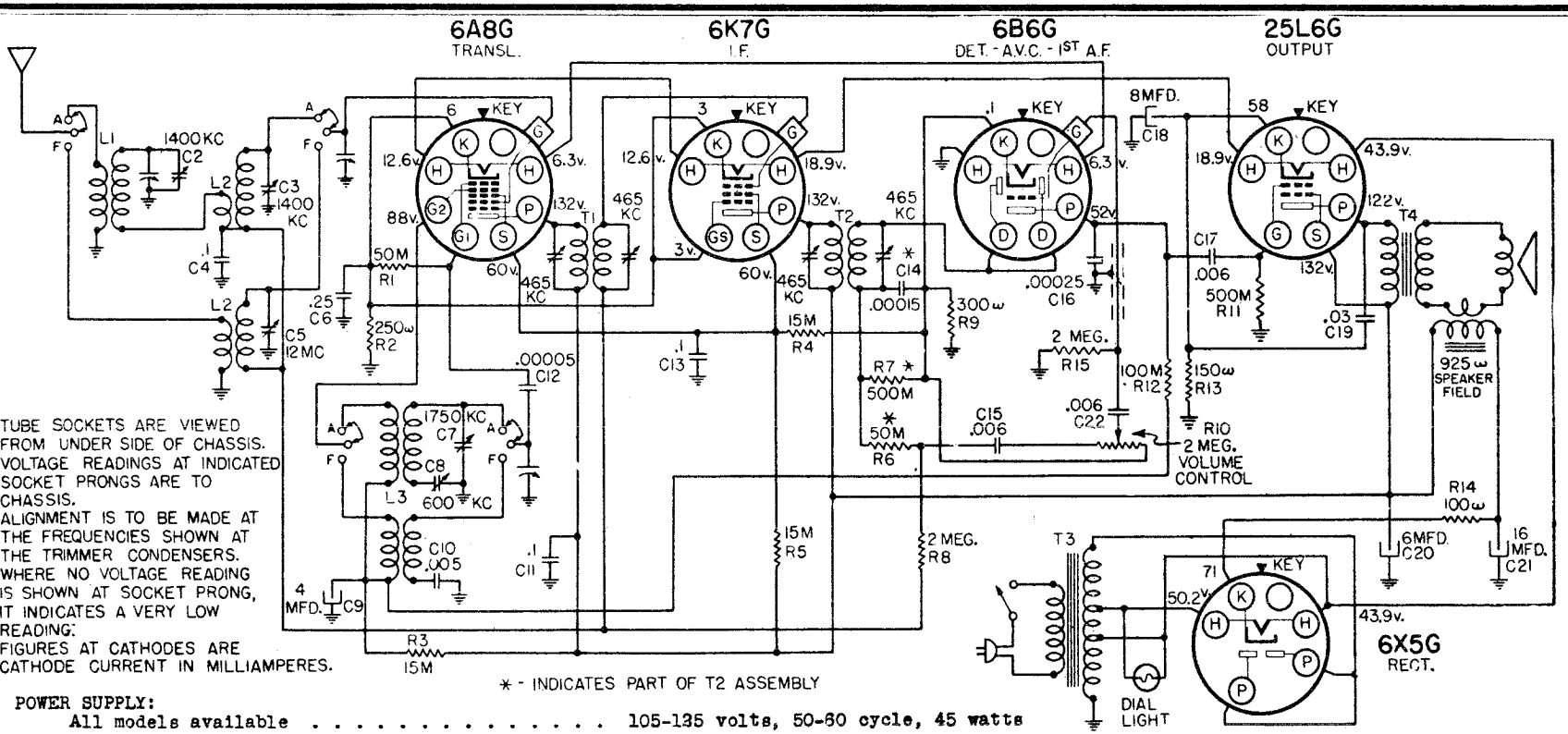

TUBE SOCKETS ARE VIEWED FROM UNDER SIDE OF CHASSIS.
VOLTAGE READINGS AT INDICATED SOCKET PRONGS ARE TO CHASSIS.
ALIGNMENT IS TO BE MADE AT THE FREQUENCIES SHOWN AT THE TRIMMER CONDENSERS.
WHERE NO VOLTAGE READING IS SHOWN AT SOCKET PRONG, IT INDICATES A VERY LOW READING.
FIGURES AT CATHODES ARE CATHODE CURRENT IN MILLIAMPERES.

* - INDICATES PART OF T2 ASSEMBLY

POWER SUPPLY:
All models available . . . . . 105-135 volts, 50-60 cycle, 45 watts

FREQUENCY RANGES:

American	540-1750 kc
Foreign	3800-12,300 kc

ALIGNMENT FREQUENCIES:

	Oscil. Trimmer	Ant.-Transl. Trimmer	Padder
American	1750 kc	1400 kc	600 kc
Foreign	-	13 mc	-

INTERMEDIATE FREQUENCY . . . . . 465 kc

POWER OUTPUT:

Type	Beam tube
Undistorted	1.8 watts
Maximum	2.5 watts

LOUD SPEAKER:

Type	Dynamic
Size	6 inch
Field coil resistance(App.)	935 ohms

POSITIONS OF TUBES AND WIRES TO TOP OF TUBES.

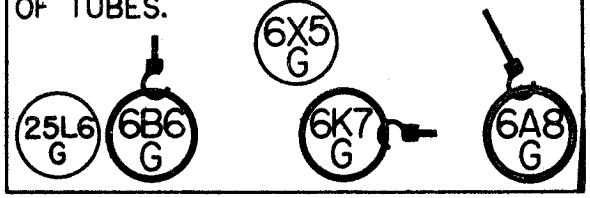

ELIMINATING WHISTLE AT 930 KC:

A whistle, due to a beat between the second harmonic (930 kc) of the 465 kc IF, and a 930 kc signal may be experienced. In localities where the 930 kc station is one that is frequently listened to, it will be desirable to shift the whistle to some other point where it will not be objectionable. This can be done by shifting the IF frequency of the receiver.

Determine at what point between 900 kc and 960 kc the whistle will be least objectionable. Dividing this frequency by two will give the new IF frequency to which the receiver should be aligned. For example, if it is determined that a whistle at 915 kc would not be objectionable, the IF should be realigned at 915/2 or 457.5 kc. Try to choose the new IF frequency as near to 465 kc as possible.

OCTOBER 13, 1937

MODELS 4761,4771
Chassis 101.490

SEARS ROEBUCK & CO.

Socket, Trimmers
Chassis, Alignment
Sensitivity, Transf.

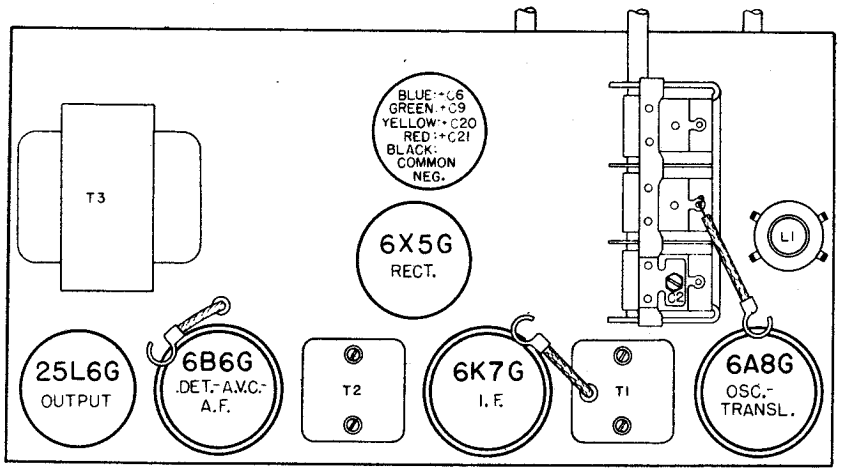

LOCATIONS OF PARTS ON TOP OF CHASSIS.

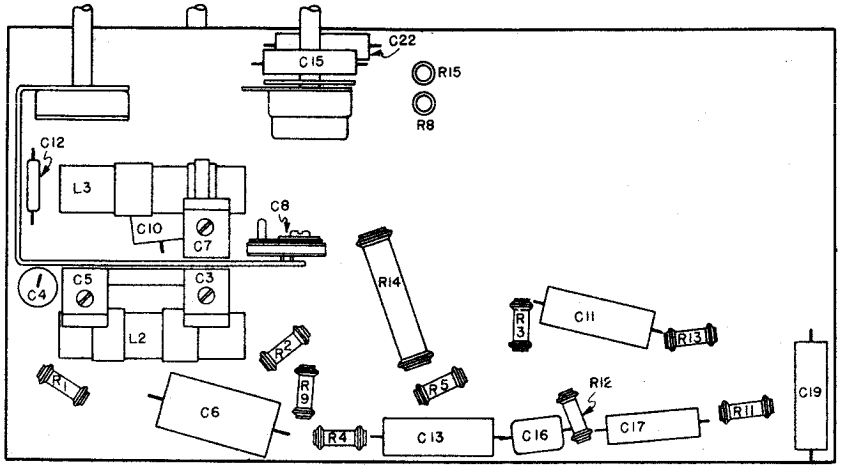

LOCATIONS OF PARTS UNDER CHASSIS.

ALIGNMENT PROCEDURE

PRELIMINARY:

Output meter connections . . . . . Across speaker voice coil

Output meter reading to indicate 50 milliwatts output . . . . . 0.38 volts

Dummy antenna value to be in series with generator output . . . . . See chart below

Connection of generator output lead . . . . . See chart below

Connection of generator ground lead . . . . . To external ground

Generator modulation . . . . . 30%, 400 cycles

Position of Volume Control . . . . . Fully clockwise

Position of Dial Pointer . . . . . To coincide with horizontal center line of dial when variable is fully closed.

WAVE BAND SWITCH POSITION	POSITION OF DIAL POINTER	GENERATOR FREQUENCY	DUMMY ANTENNA	GENERATOR CONNECTION	TRIMMERS ADJUSTED (IN ORDER SHOWN)	TRIMMER FUNCTION	APPROXIMATE MICROVOLTS
"AM"	550 kc	465 kc	.1 mfd.	6A8G grid	T2,T1	IF	75
"AM"	Fully open	1750 kc	.0002 mfd.	*	C7	Oscillator Trimmer	150
"AM"	1400 kc	1400 kc	.0002 mfd.	*	C3,C3	Antenna Translator	100
"AM"	600 kc (rock)	600 kc	.0002 mfd.	*	C8	Padder	50
"FOR"	13 mc (rock)	13 mc	400 ohms	*	C5	Translator Trimmer	70

IMPORTANT ALIGNMENT NOTES

* Push a pin through the attached antenna wire at a point near where it comes out of the chassis so that the pin makes contact with the antenna wire inside the insulation. Connect the generator output lead to the pin. The generator output connection should not be made to the free end of the attached antenna wire.

Where indicated by the word, "Rock", the variable should be rocked back and forth a degree or two while making the adjustment.

The figures given in the "Microvolts" column are only approximate.

The alignment procedure should be repeated stage by stage, in the original order, for greatest accuracy. Always keep the output from the test oscillator at its lowest possible value to make the AVC action of the receiver ineffective.

After the alignment procedure has been completed, tune in a broadcast station at about 900-kc and, if necessary, shift the dial pointer to the station's frequency marking on the dial.

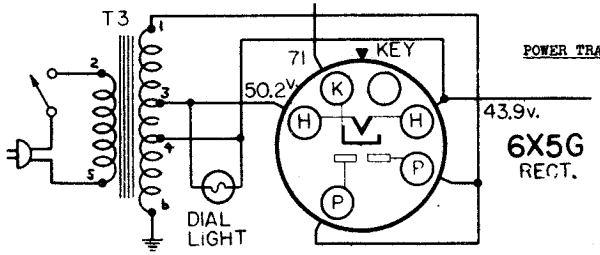

POWER TRANSFORMER COLOR CODE

1. RED
2. GREEN
3. YELLOW
4. BLUE
5. BLACK
6. SLATE

©John F. Rider, Publisher

©John F. Rider, Publisher

	Radio Only	Total
POWER SUPPLY RATINGS AVAILABLE 105-125 volts, 60 cycles . .	75 watts . .	105 watts
105-125 volts, 25 cycles . .	80 watts . .	110 watts

FREQUENCY RANGES:
American Band . . . 540-1720 kc
Foreign Band . . . . 5.8-18 mc

ALIGNMENT FREQUENCIES:
Band "F" . . . . . 15 mc(osc.,det.)
Band "A" . 600 kc(osc.), 1500 kc(osc.)

INTERMEDIATE FREQUENCY . . . . . 460 kc

POWER OUTPUT:
Type . . . . . Pentode
Undistorted . . . . . 2 watts
Maximum . . . . . 4 watts

LOUDSPEAKER:
Type . . . . . Electrodynamic
Size . . . . . 6 inches
V.C. impedance 2.6 ohms at 400 cycles
Field coil resistance . . . . 1290 ohms
App. field coil voltage drop 80 volts

DEC. 10, 1937

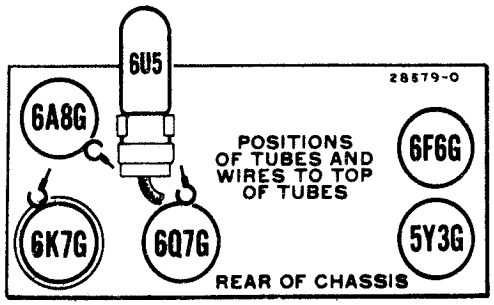

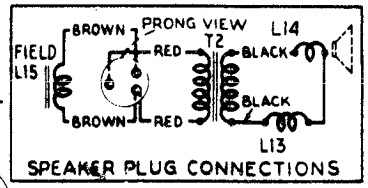

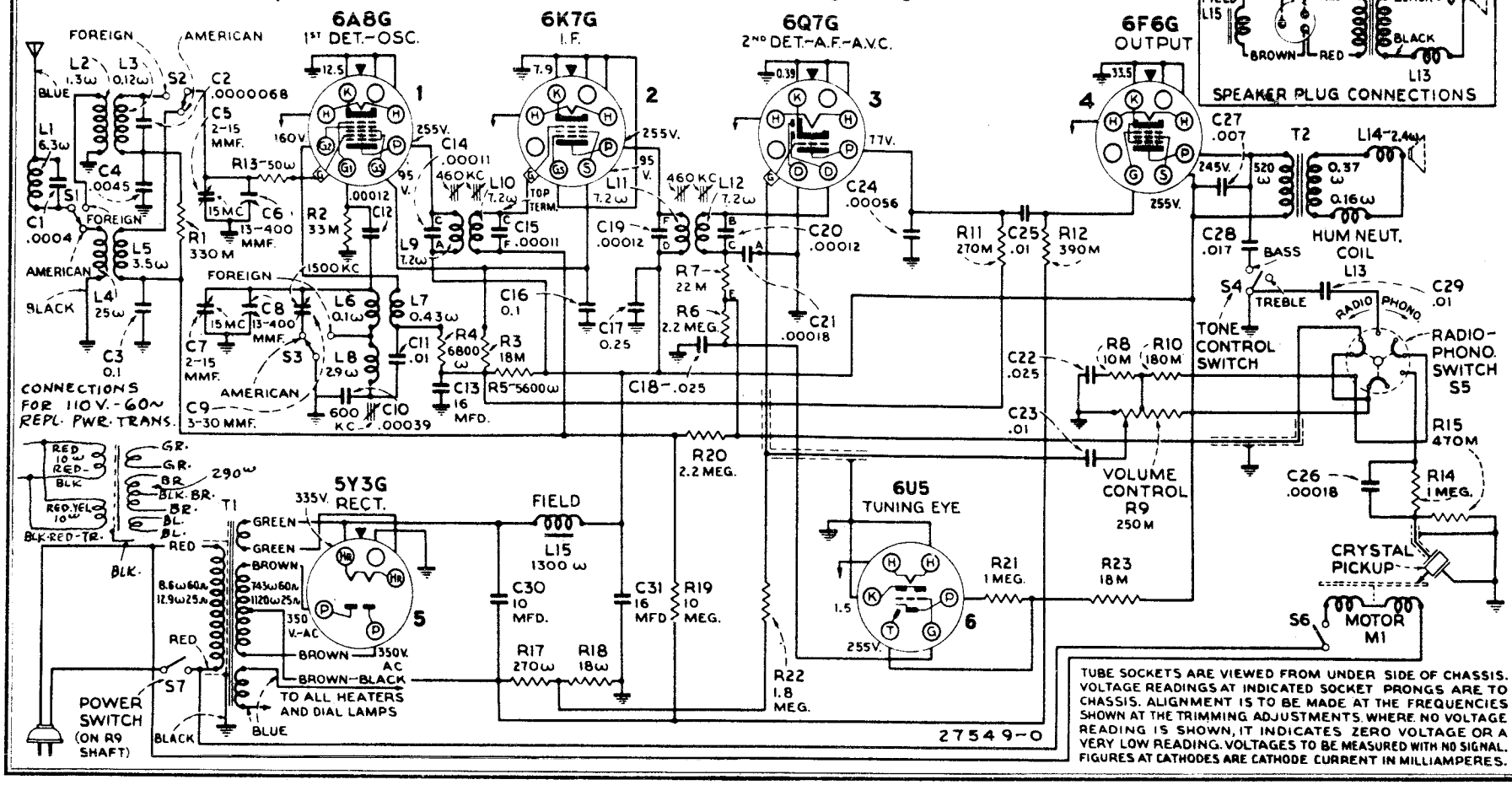

TUBE SOCKETS ARE VIEWED FROM UNDER SIDE OF CHASSIS. VOLTAGE READINGS AT INDICATED SOCKET PRONGS ARE TO CHASSIS. ALIGNMENT IS TO BE MADE AT THE FREQUENCIES SHOWN AT THE TRIMMING ADJUSTMENTS. WHERE NO VOLTAGE READING IS SHOWN, IT INDICATES ZERO VOLTAGE OR A VERY LOW READING. VOLTAGES TO BE MEASURED WITH NO SIGNAL. FIGURES AT CATHODES ARE CATHODE CURRENT IN MILLIAMPERES.

SEARS ROEBUCK & CO.
MODEL 4776
Chassis 126.200

MODEL 4776
Chassis 126.200
Phono. Data

SEARS ROEBUCK & CO.

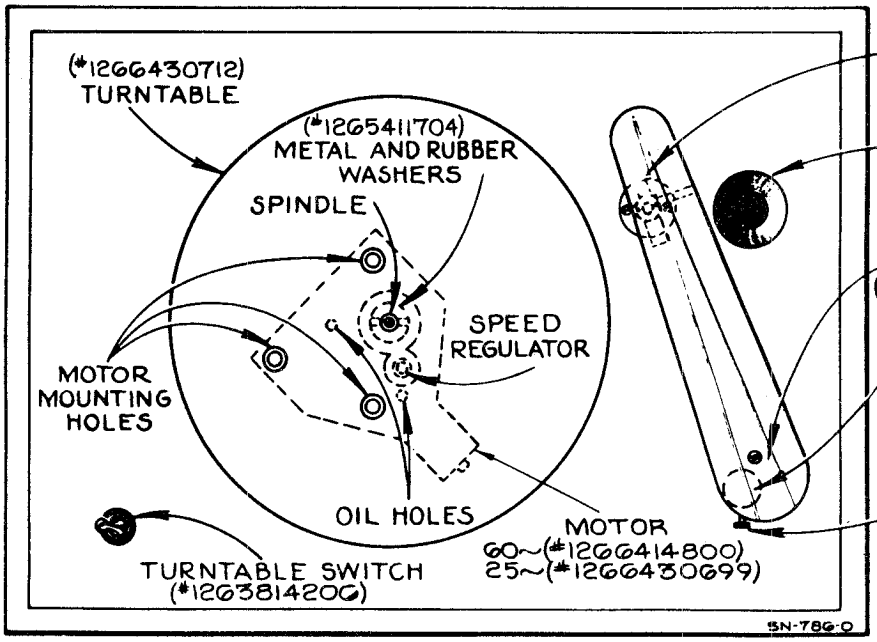

DETAILS OF MOTORBOARD

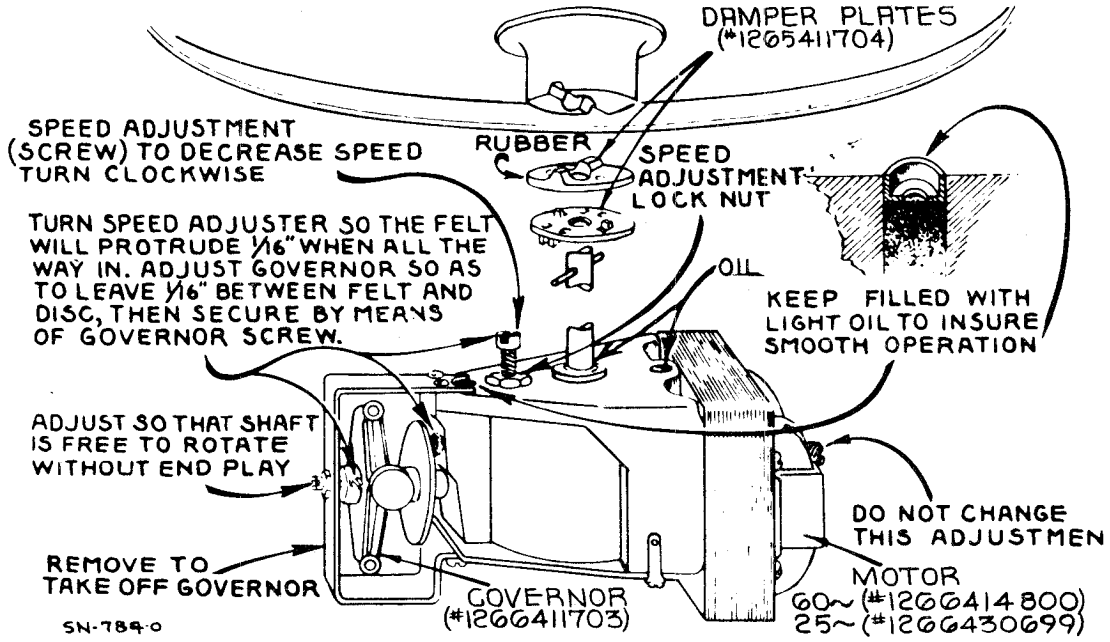

DETAILS OF MOTOR

MOTOR ADJUSTMENTS:

The phonograph motor is of the governor induction type and is designed to be simple and foolproof. Occasionally, however, certain adjustments may be required. These adjustments are shown and explained in the illustration. Application of oil to the felt pad which rubs against the governor disc will insure smooth operation.

LOUDSPEAKER:

Centering of the loudspeaker is made in the usual manner with three, narrow-paper feelers, after first removing the front dust cover. This may be removed by softening its cement with a light application of acetone, using care not to allow the acetone to flow into the air gap. The dust cover should be cemented back in place with ambroid upon completion of adjustment.

DIAL POINTER AND CONDENSER DRIVE HOOK-UP:

The drive hook-up for the dial pointer and the variable condenser is illustrated.

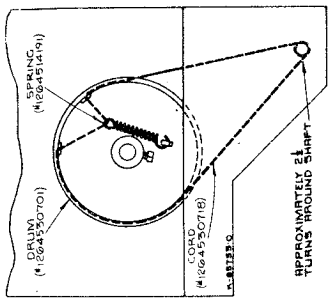

DIAL DRIVE HOOKUP

©John F. Rider, Publisher

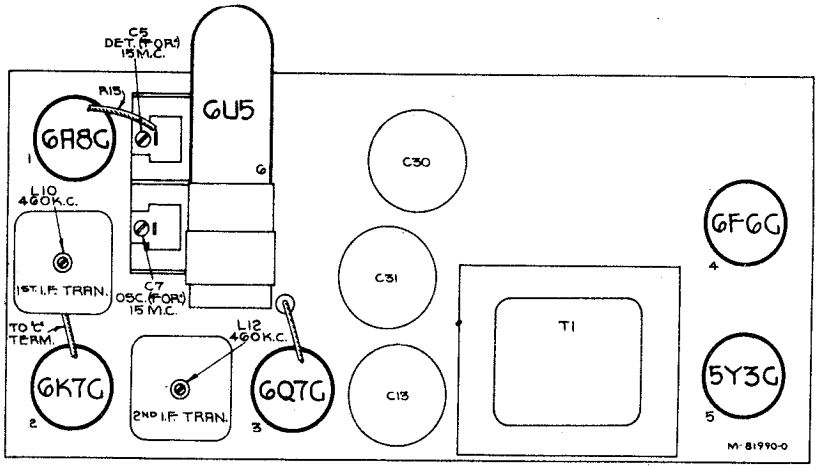

LOCATION OF PARTS AND ALIGNMENT ADJUSTMENTS TOP OF CHASSIS

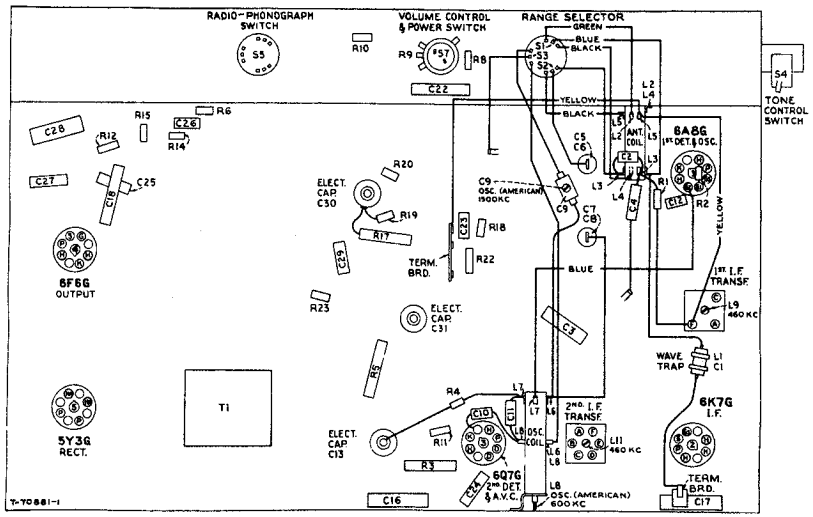

LOCATION OF PARTS AND ALIGNMENT ADJUSTMENTS BOTTOM OF CHASSIS

ALIGNMENT PROCEDURE

PRELIMINARY:

Output meter connections . . . . . Across speaker voice coil

Output meter reading to indicate 1.0 watt output . . . . . 1.61 volts

Approximate average sensitivity in microvolts for 1.0 watt output . . . . . See chart below

Dummy antenna value to be inserted in series with generator output . . . . . See chart below

Connection of generator output lead . . . . . See chart below

Connection of generator ground lead . . . . . To chassis

Generator modulation . . . . . 30%, 400 cycles

Position of Radio-Phono. switch . . . . . Counter-clockwise

Position of Volume Control . . . . . Fully clockwise

Position of Tone Control . . . . . Fully clockwise

Position of Dial Pointer with variable tuning condenser fully closed . . . . To fall on last calibration mark at 540 kc end of "American" band.

WAVE-BAND SWITCH POSITION	POSITION OF DIAL POINTER	GENERATOR FREQUENCY	DUMMY ANTENNA	GENERATOR CONNECTION	TRIMMERS ADJUSTED (IN ORDER SHOWN)	TRIMMER FUNCTION	APPROXIMATE MICROVOLTS
"AM"	No signal 550-750 kc	460 kc	.001 mfd.	6K7-G Grid	L11,L12	2nd I-F Trans.	15,000
"AM"	No signal 550-750 kc	460 kc	.001 mfd.	6A8-G Grid	L9,L10	1st I-F Trans.	200
"FOR"	15 mc	15 mc	300 ohms	Ant. Lead (blue)	C7**	"FOR" Osc.	-
"FOR"	15 mc (rock)	15 mc	300 ohms	Ant. Lead (blue)	C5*	"FOR" Det.	60
"AM"	1500 kc (rock)	1500 kc	.0002 mfd.	Ant. Lead (blue)	C9	"AM" Osc.	-
"AM"	600 kc (rock)	600 kc	.0002 mfd.	Ant. Lead (blue)	L8	"AM" Osc.	29
"AM"	1500 kc (rock)	1500 kc	.0002 mfd.	Ant. Lead (blue)	C9	"AM" Osc.	97

IMPORTANT ALIGNMENT NOTES

**Use maximum capacity peak if two peaks can be obtained.

*Use minimum capacity peak if two peaks can be obtained.

Where indicated by the word "Rock," the variable tuning condenser should be rocked back and forth a degree or two while making this adjustment.

Each step of the alignment should be repeated in its original order for greater accuracy. Always keep the output from the generator at its lowest possible value, to prevent the a-v-c action of the set from interfering with accurate alignment.

Adjustment locations are shown on the top and bottom parts location views of chassis.

Only the dummy antenna indicated in the chart for any particular band should be used. Remove the dummy antenna used for alignment in any other band. Grid cap leads should remain in place during alignment.

Values shown under, "Microvolts," are only approximate.

©John F. Rider, Publisher

MODEL 4700
Schematic, Adjustments

SEARS-ROEBUCK & CO.

Alignment

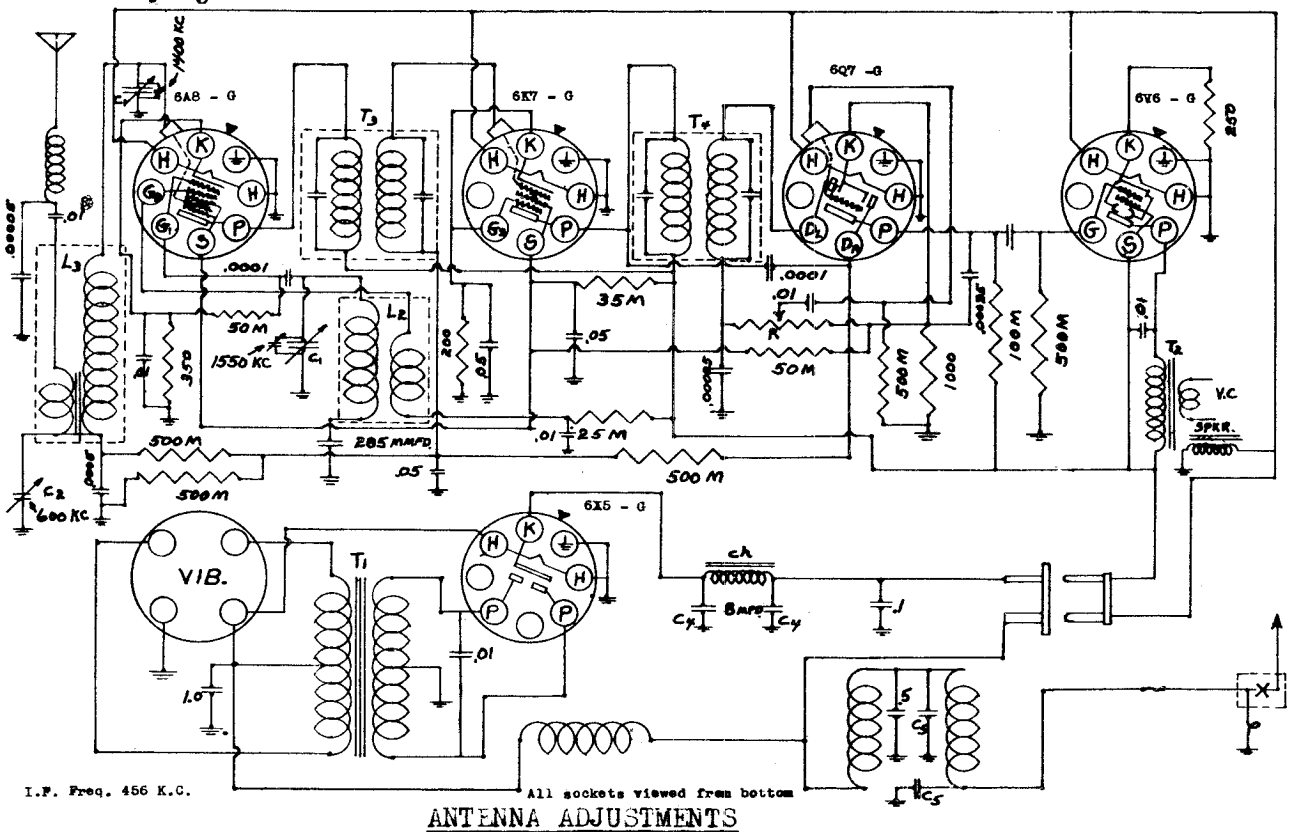

ANTENNA ADJUSTMENTS

See that a suitable aerial has been provided, place the radio on the floor of the drivers compartment and temporarily connect it so that it can be turned on and operated. The control cables and head should be assembled and fastened to the receiver. The case of the radio will have to be grounded against some metal part such as brake or gear shift lever.

Turn on receiver and tune in a station at about 600 on the dial. Near the point where the aerial is connected to the set a plug button will be found. This can be removed and by means of a small screw driver adjust the small screw found under the plug button. Turn this screw for maximum sensitivity. Now replace the plug button and turn the dial to about 1400 KC. Near the front of the case are two plug buttons, one being red color. Do not under any circumstance disturb the adjustment under the red button. This ordinarily does not need adjustment but should it be necessary, only a qualified radio technician must be engaged to make this adjustment. The other adjustment under the button which is of the same color as the case, is to be made for maximum sensitivity.

It is easier to make these adjustments when the receiver is on the floor of the car than after it is mounted and not so accessible.

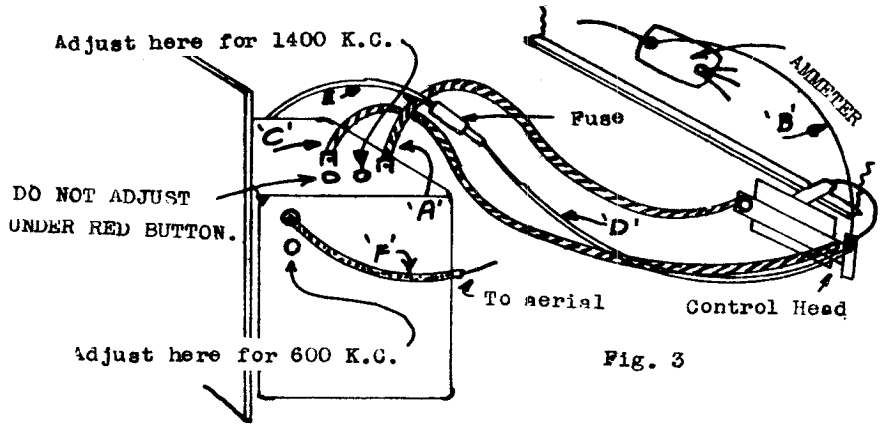

Fig. 3

©John F. Rider, Publisher

©John F. Rider, Publisher

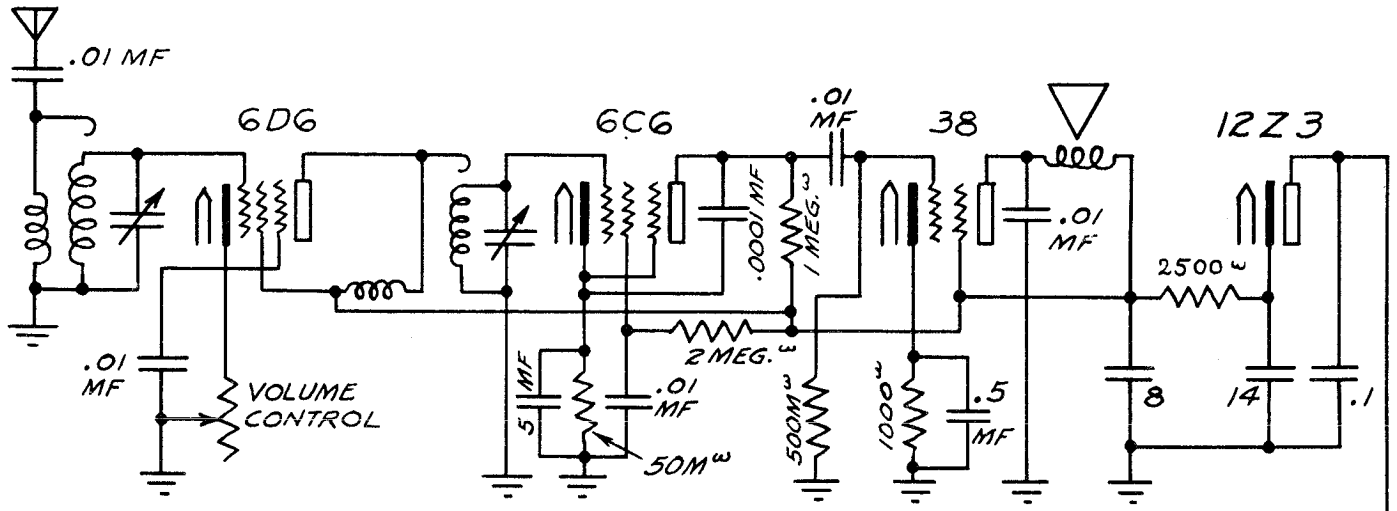

TUBE	POSITION	E_F	E_P	E_{SG}	E_K
6D6	RF	6.3	100	100	2.1
6C6	DET.	6.3	18	14	1.5
38	PWR. OUT.	6.3	90	100	15.
12Z3	RECT.	12	—	—	118

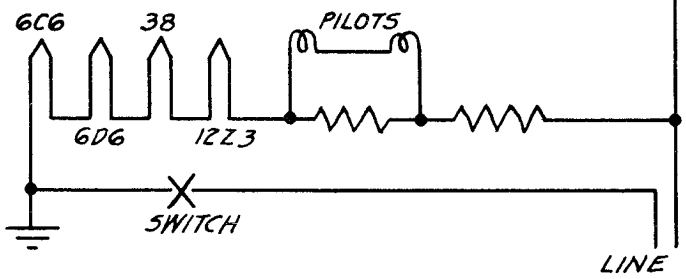

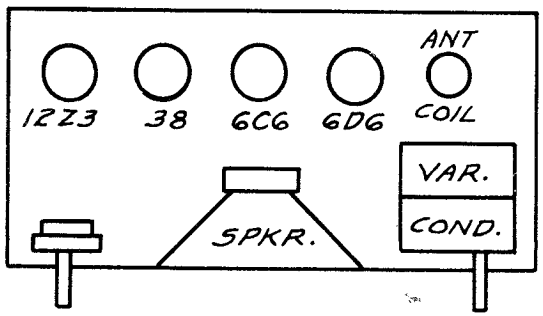

CIRCUIT: A four tube tuned radio frequency AC-DC receiver.

ALIGNMENT PROCEDURE:

Turn tuning knob to the extreme right in a clockwise direction so that the variable condenser is at minimum capacity. Apply a 1720 KC note to the antenna and adjust both trimmers on the variable condenser to maximum gain. Next, tune to the low frequency end and check tracking of coils for maximum gain. It may be necessary to bend plates to increase sensitivity.

MODELS 7181,7182
Socket,Trimmers

SEARS-ROEBUCK & CO.

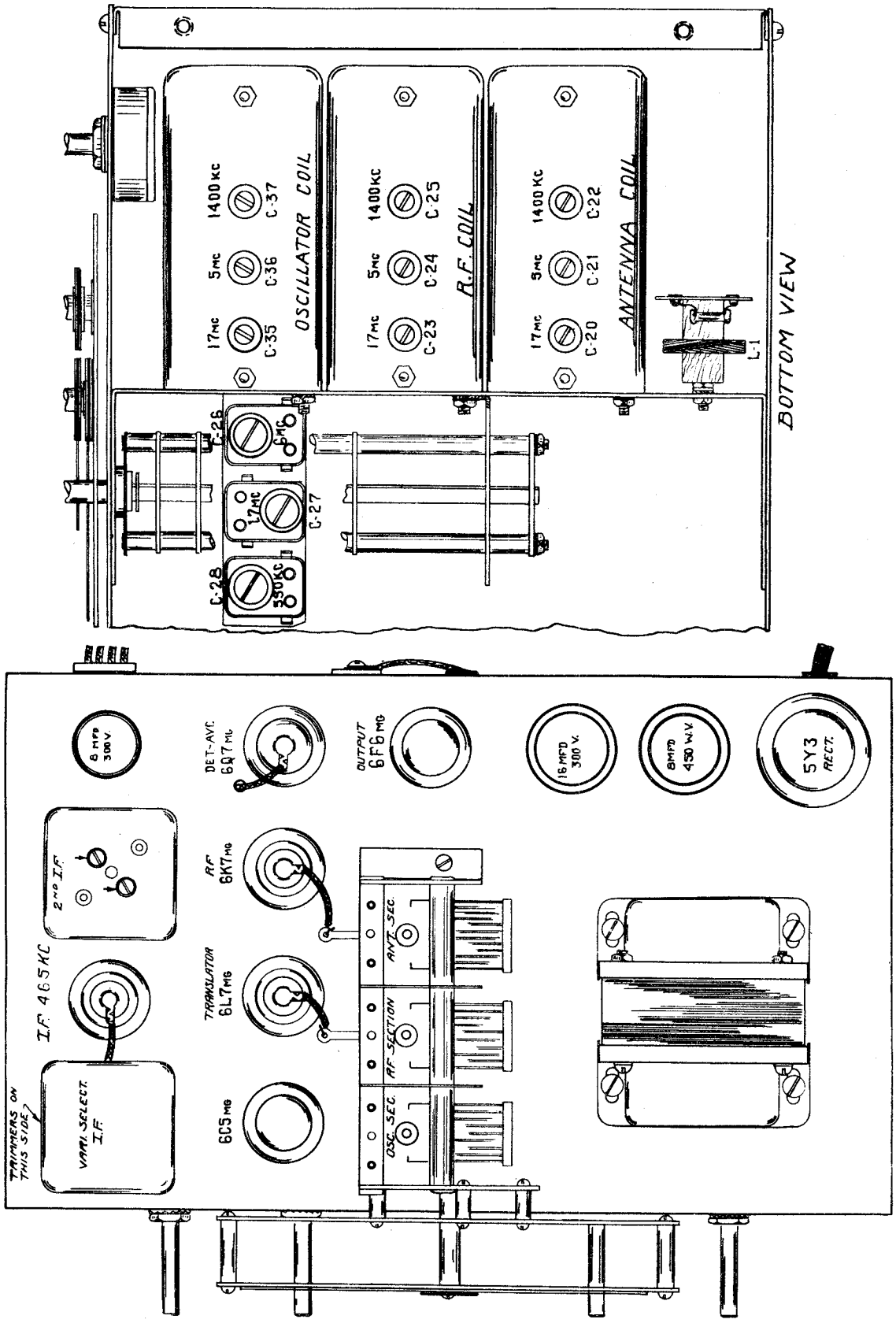

©John F. Rider, Publisher

SEARS-ROEBUCK & CO.

MODELS 7181, 7182
Schematic, Voltage

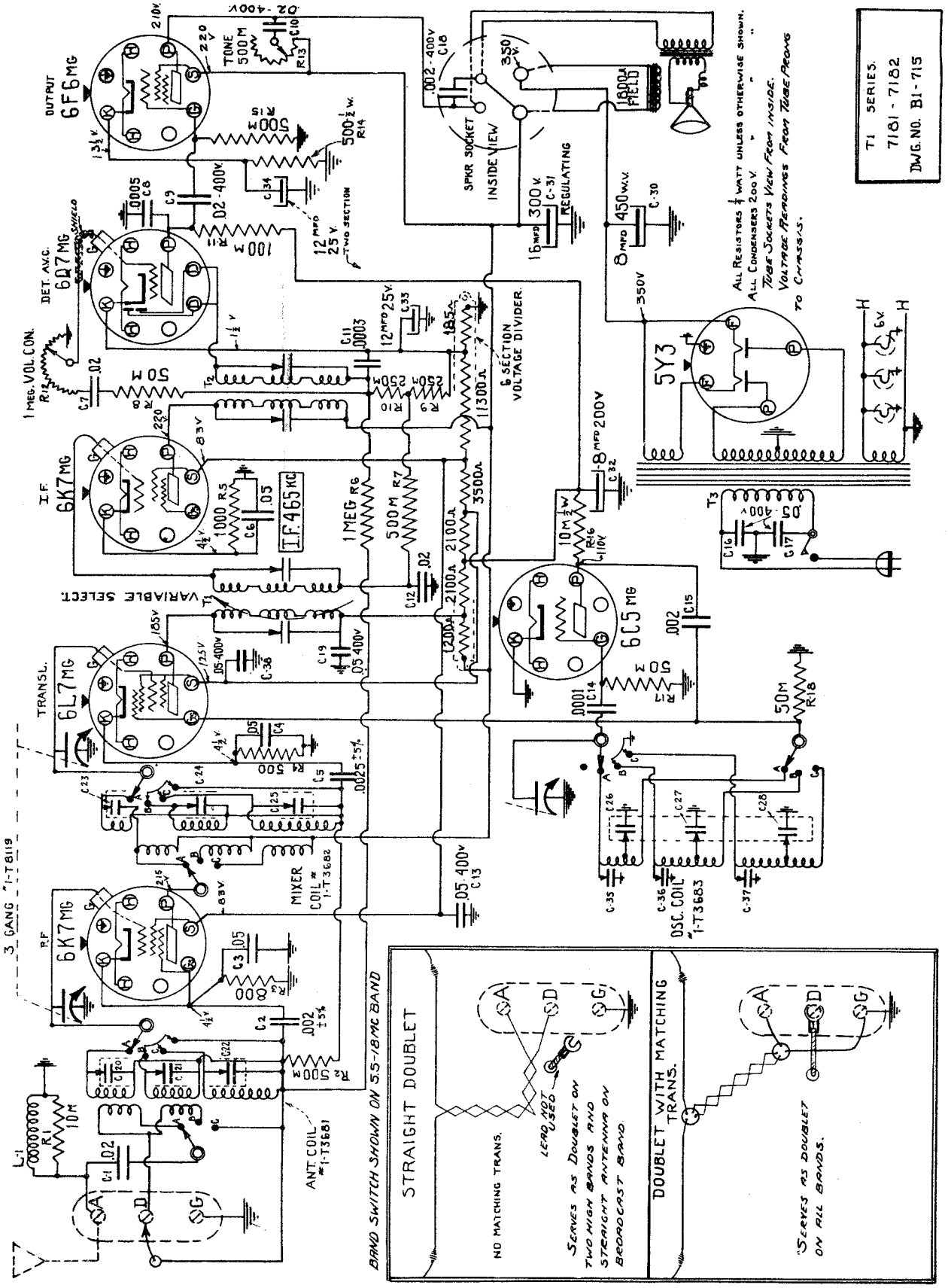

©John F. Rider, Publisher

THE ALIGNMENT PROCEEDURE

The following alignment instructions are given with the assumption that the service station has an oscillator capable of accurately covering the range of the receiver.

The only other apparatus necessary is a meter connected in the output stage to indicate resonance. This can be 0 to 3 volt AC meter connected across the voice coil of the speaker or preferably an output meter connected in the plate circuit of the 42 power tube in series with an 8 MFD paper condenser.

I THE I.F. STAGES

The I.F.'s are aligned by the usual system of feeding the intermediate frequency of 465KC into the grid of the 6L7 tube.

The two trimmers in each of the I.F. cans should be very carefully peaked to resonance as they are very critical and will greatly affect the performance of the set. These are the trimmers in the three I.F. cans. (See pictorial).

THE I.F. STAGES MUST BE ALIGNED WITH THE FIDELITY CONTROL IN THE SHARP POSITION, THAT IS WITH THE SHAFT TURNED ALL THE WAY TO THE LEFT.

The sensitivity of the I.F. system in the sharp position is about 200 microvolts. In the high fidelity position the sensitivity is about 20 microvolts.

Always use as low an output as possible from the signal generator when making the various adjustments.

II ALIGNMENT OF SHORTWAVE BAND 5.5 TO 18 M.C.

First check the position of the dial hand by rotating the condenser shaft to the left to full capacity. At this point the dial hand should be straight across in line with the lines dividing the scale in half. If the hand is off position it can be lined up by removing dial glass and setting hand with screw in center of dial.

1. Set the test oscillator to 17 megacycles.

2. Turn wave band switch all the way to right for highest S.W. band, and set dial hand to 17 M.C.

3. Peak trimmer condenser C-35 of the oscillator coil (See pictorial) to resonance with 17 M.C. fed into antenna.

4. Adjust antenna and R.F. coil trimmers C-20 and C-23 to same frequency after the above mentioned oscillator trimmer has been set.

5. Turn dial hand to 6 M.C. on same band and peak padding condenser C-26 to 6 M.C.

III SHORTWAVE BAND 1.7 TO 5.5 M.C.

1. Set band switch to this band and dial hand to 5 M.C.

2. Peak trimmer C-36 to 5 M.C.

3. Peak antenna and R.F. trimmers C-21 and C-24 to 5 M.C.

4. Rotate dial to 1.7 M.C. and adjust Padding Condenser C-27 to 1.7 M.C.

NOTE: After adjusting the two high bands at 17 megacycles and 5 megacycles the test oscillator input to antenna should be increased and receiver dial advanced to .9 megacycle lower and note if test oscillator signal is heard.

In case there is no response the oscillator trimmers have been pulled down too tightly. The trimmers should be released until this condition exists then go back to original point of alignment - reduce antenna input voltage and correct the trimmer adjustment.

EXAMPLE: The receiver has been adjusted to 17 megacycles. Tune receiver to approximatly 16.9 M.C.

Increase oscillator signal by "opening up" the attenuator. Move the dial back and forth at 16.9 M.C.

If no signal is heard, let oscillator trimmer off until it is heard at 16.9 M.C.

Reduce signal voltage from generator, go back to 17 M.C. and slightly correct this last trimmer adjustment.

The same thing applies to the 5 M.C. adjustment.

IV THE BROADCAST BAND

1. Turn wave band switch all the way to left and dial hand set to 1400KC (the top scale).

2. Peak oscillator trimmer C-37 to 1400 KC and R.F. circuit trimmers C-22 and C-25 to same frequency.

3. Set dial hand to 550 KC and adjust oscillator padding condenser C-28 to 550 KC.

4. Recheck dial at 1400 KC as in number (1) and (2).

5. Points in the middle of the dial may be checked and if necessary the plates of the front section of variable condenser may be bent for alignment.

V NOTES

1. Seal all trimmers after their final adjustment.

2. Be sure that the settings are being made to the true fundamental signal from the oscillator and not on a harmonic or image frequency.

3. Refer to the schematic for the voltages at the tube sockets.

©John F. Rider, Publisher

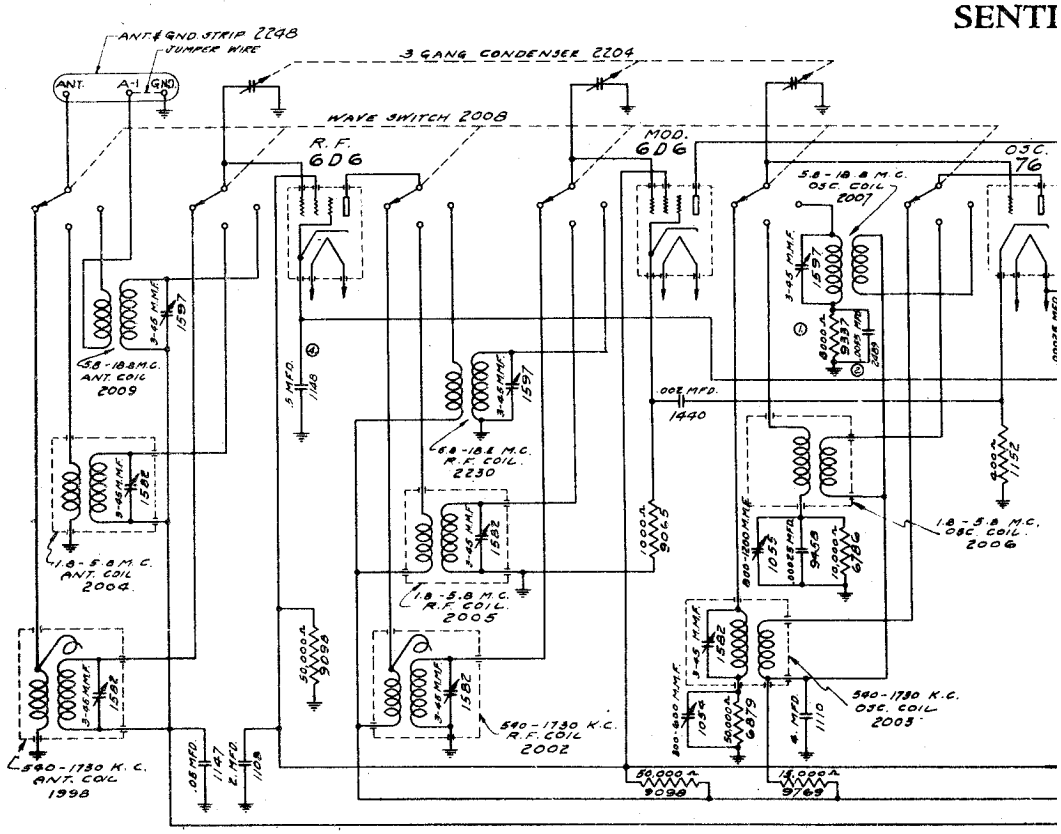

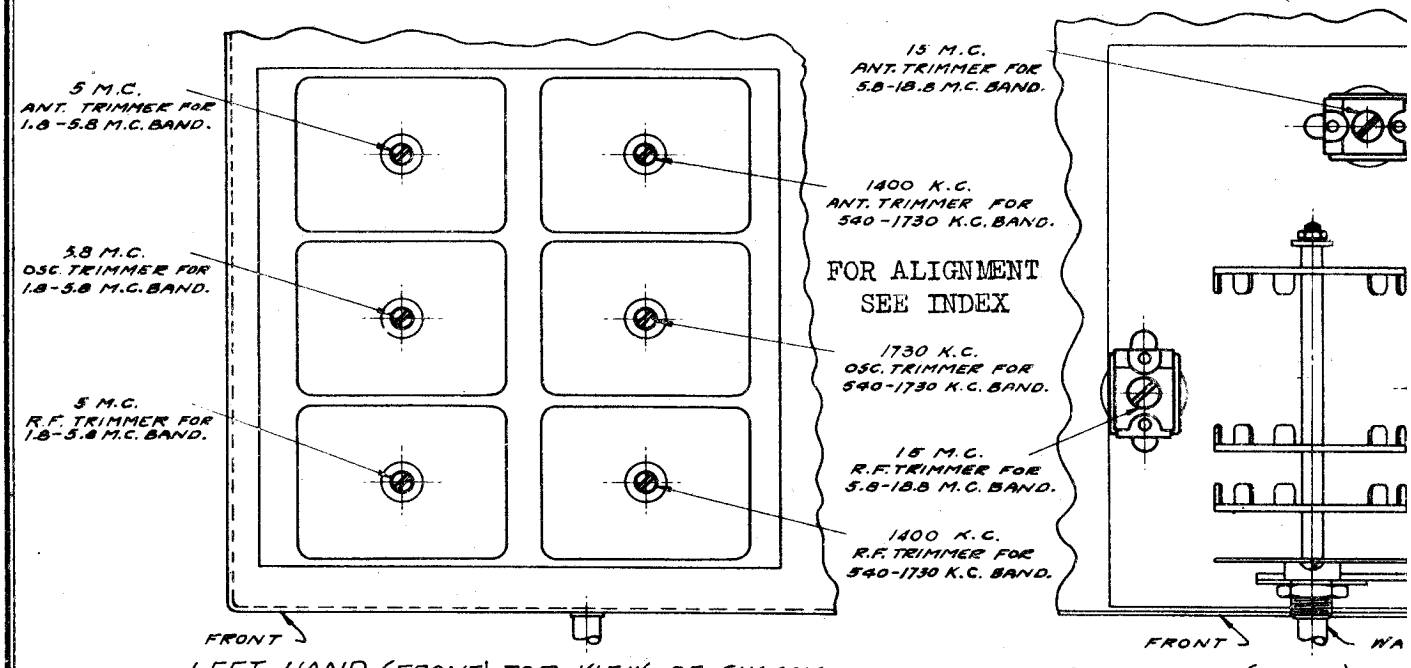

LEFT HAND (FRONT) TOP VIEW OF CHASSIS

RIGHT HAND (FRONT) BOT

©John F. Rider, Publisher

NEL RADIO CORP.

MODEL 14 A
Schematic, Parts
Trimmers

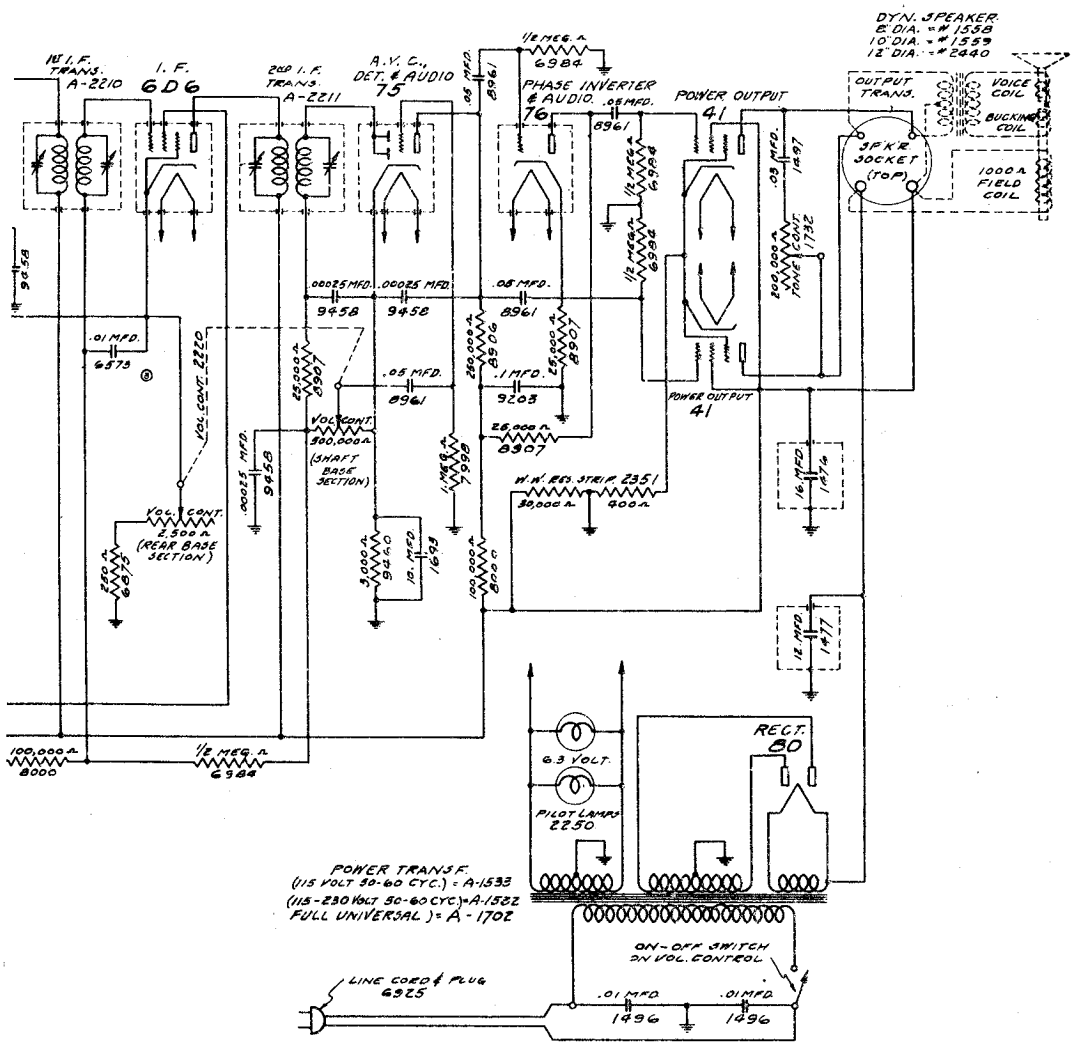

NOTE:

1. I.F. = 465 K.C.
2. ALL Nos. SHOWN RELATIVE TO PARTS ARE OUR PART NUMBERS.
3. NUMBERS SHOWN WITH PREFIX 'A' ARE FOR COMPLETE ASSEMBLIES.

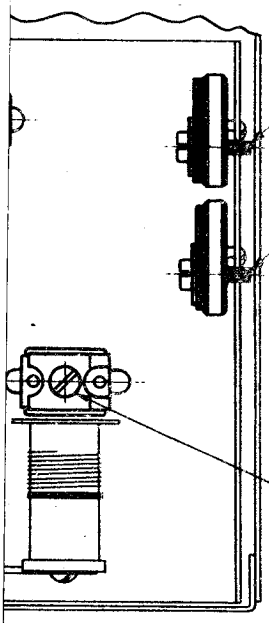

VE SWITCH.

TOM VIEW OF CHASSIS

MODEL 66 B
Schematic, Parts
Socket, Voltage
Trimmers

SENTINE

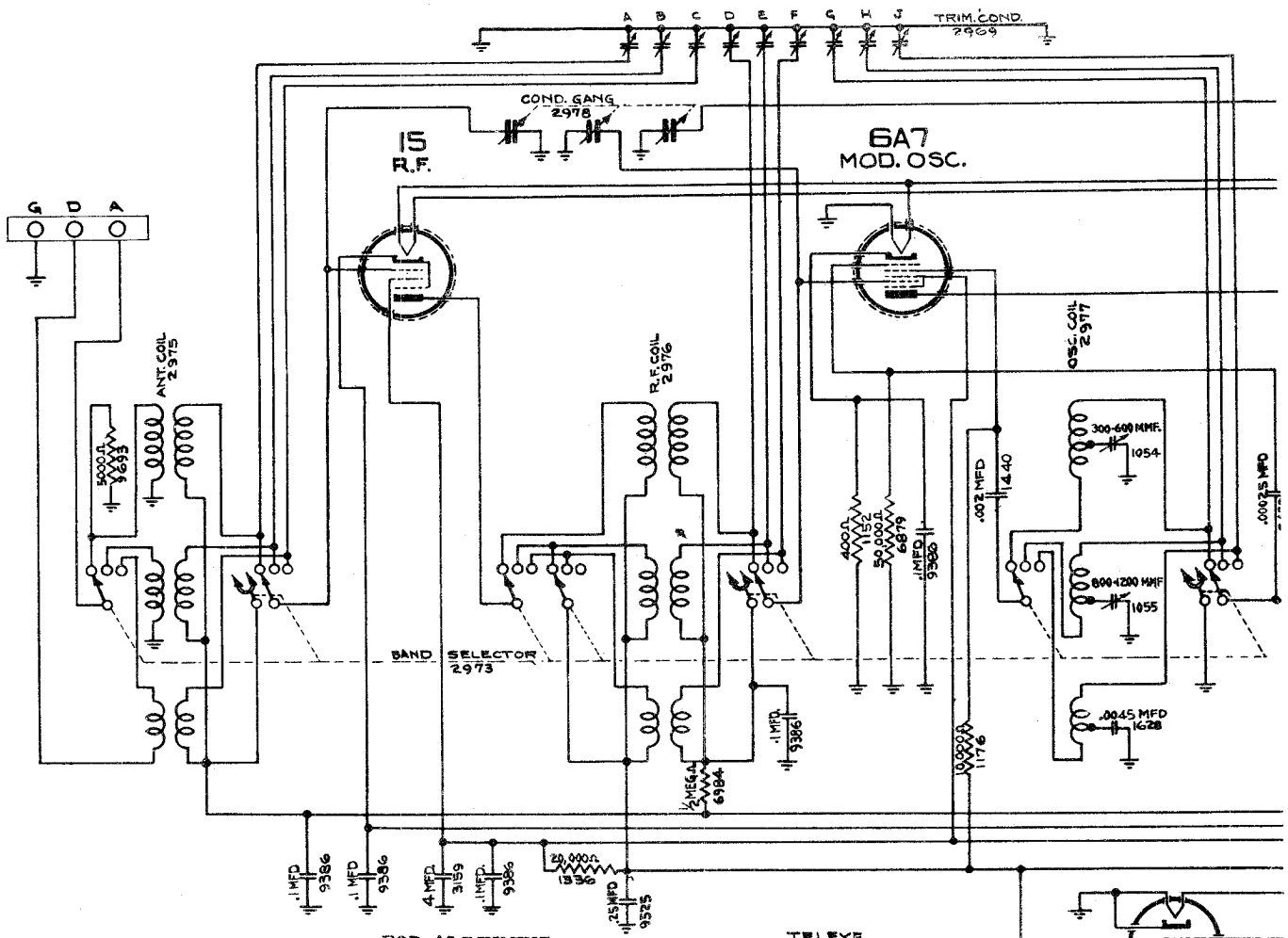

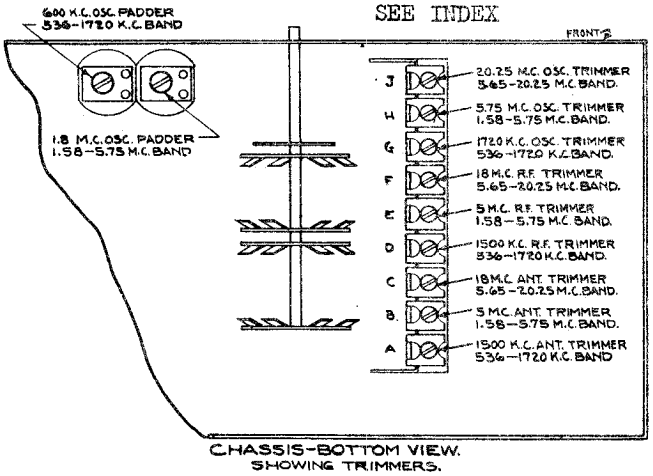

CHASSIS-BOTTOM VIEW.
SHOWING TRIMMERS.

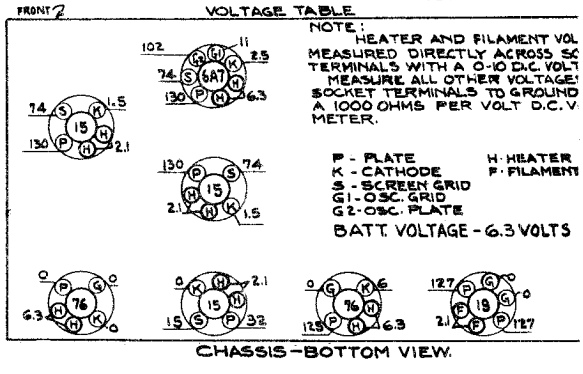

CHASSIS-BOTTOM VIEW.

©John F. Rider, Publisher

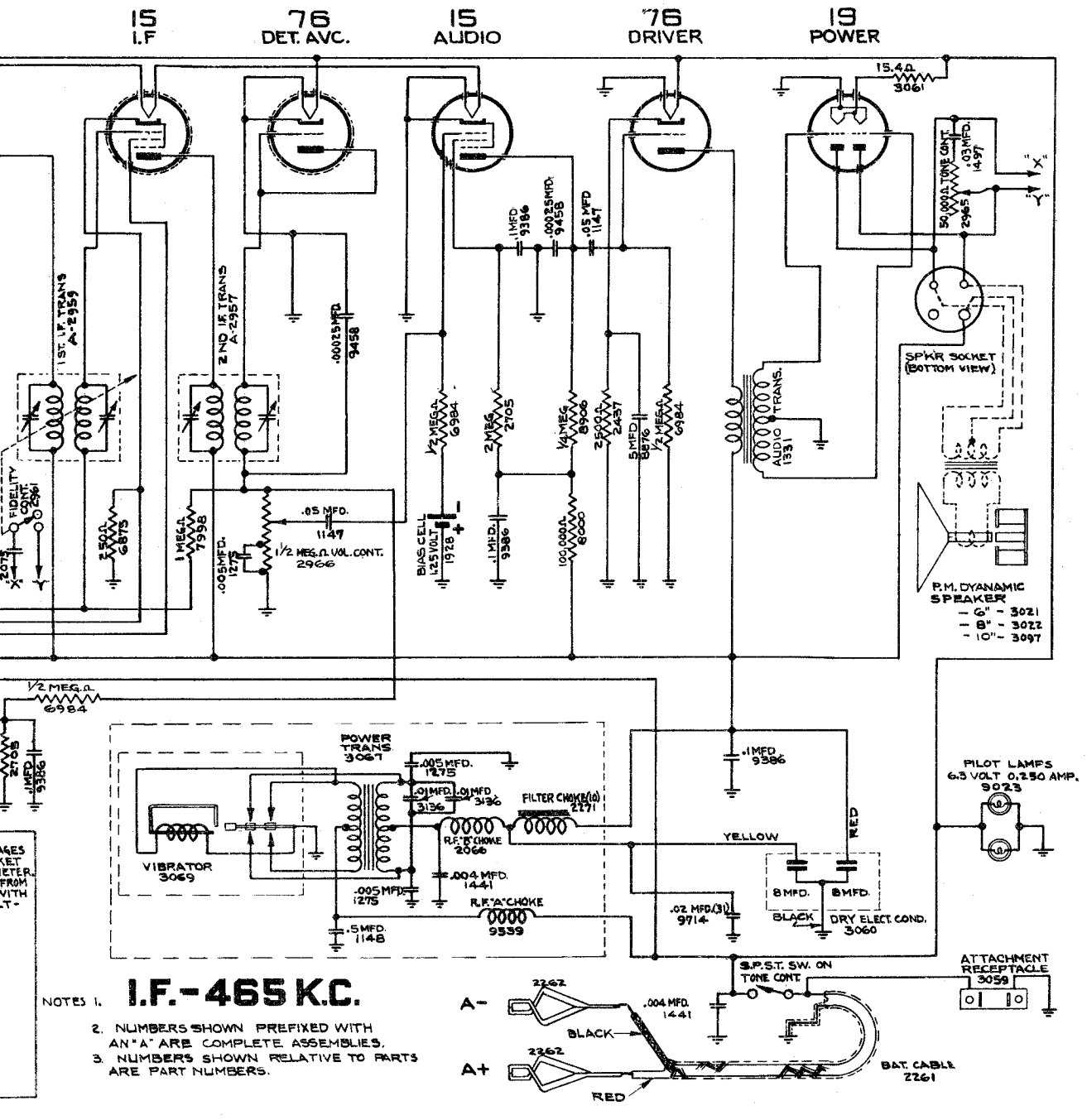

NOTES 1. **I.F.-465 K.C.**

2. NUMBERS SHOWN PREFIXED WITH AN "A" ARE COMPLETE ASSEMBLIES.
3. NUMBERS SHOWN RELATIVE TO PARTS ARE PART NUMBERS.

SENTINEL RADIO CORP.

MODEL 14 A
Alignment, Socket Voltage

TO ALIGN THE VARIABLE CONDENSER:

It is important when aligning the gang condenser, padding and trimmer condensers to follow the procedure carefully, otherwise the receiver will be insensitive and the dial calibration will be incorrect. The padding and trimmer condensers located underneath the chassis and inside of and accessible through the holes found in the top of the catacomb shield (mounted on top and in the left front corner of the receiver) will be referred to by their function as indicated on the circuit diagram.

1. Connect the high output side of the test oscillator through a 400 ohm resistor to the receiver antenna lead and the low side to the set ground.

2. Place the band selector switch for operation on the 5.8 to 18.8 megacycle band, tune the receiver dial, and set the test oscillator frequency to EXACTLY 18.8 MEGACYCLES.

Rotate gang condenser so that plates are completely out of mesh and then tune in the 18.8 MEGACYCLE SIGNAL TO MAXIMUM OUTPUT BY ADJUSTING THE 18.8 MEGACYCLE OSCILLATOR TRIMMER. When adjusting this trimmer two peaks, the fundamental and the image peak will be noticed. CARE MUST BE TAKEN THAT THE FUNDAMENTAL PEAK AND NOT THE IMAGE PEAK IS USED FOR ALIGNING THE RECEIVER AT 18.8 MEGACYCLES. Always back off the trimmer to minimum capacity, then screw down the trimmer (add capacity) until the first peak which is the fundamental and the proper one to use is tuned in. If the trimmer is screwed down beyond the point where the first peak is received, the incorrect image peak will be tuned in. After completing adjustment of the oscillation trimmer at 18 megacycles always check to see if the proper peak has been used. To do this leave the test oscillator frequency at 18.8 megacycles, increase the output of the test oscillator and tune the receiver dial to approximately 17.8 megacycles. Then vary the receiver dial slightly to the right and left of 17.8 megacycles, and if the fundamental peak was used in aligning at 18.8 megacycles the test oscillator signal will be heard at approximately 17.8 megacycles on the receiver dial. If it is not possible to receive the signal, then the fundamental peak was not used and the 18.8 megacycle oscillator trimmer must be properly readjusted.

3. With band selector switch set for operation on 5.8 to 18.8 megacycle band tune the receiver dial and set test oscillator frequency to EXACTLY 15 MEGACYCLES. Adjust 15 megacycle antenna and R.F. trimmers to maximum 15 megacycle signal sensitivity.

4. Leave band selector switch for operation on the 5.8 to 18.8 megacycle band, tune the receiver dial and set the test oscillator frequency to approximately 6 megacycles. While rocking gang condenser slightly to right and left adjust 6 megacycle oscillator padder for maximum sensitivity.

5. Place band selector switch for operation on 1.8 to 5.8 megacycle band, tune the receiver dial, and set test oscillator frequency to EXACTLY 5.8 MEGACYCLES.

Rotate gang condenser so that plates are completely out of mesh and then BRING IN 5.8 MEGACYCLE SIGNAL TO MAXIMUM OUTPUT by adjusting 5.8 megacycle oscillator trimmer.

6. With the band selector switch set for operating on 1.8 to 5.8 Megacycle band tune receiver dial and set test oscillator frequency to EXACTLY 5 MEGACYCLES. Then adjust 5 megacycle antenna and R.F. trimmers for maximum 5 megacycle signal sensitivity.

7. Leave band selector switch for operation on 1.8 to 5.8 megacycle band, tune receiver dial and set test oscillator frequency to approximately 2 megacycles. While rocking gang condenser slightly to right and left adjust 2 megacycle oscillator padder for maximum sensitivity.

8. Replace the 400 ohm resistor in series with test oscillator lead with a 200 Mmfd. condenser, place the band selector switch for operation on the 540 to 1730 kilocycle band and set test oscillator frequency to EXACTLY 1730 KILOCYCLES.

Rotate gang condenser so that plates are completely out of mesh and BRING IN THE 1730 KILOCYCLE SIGNAL TO MAXIMUM OUTPUT BY ADJUSTING 1730 KILOCYCLE OSCILLATOR TRIMMER.

9. With band selector switch placed for operation on the 540 to 1730 kilocycle band set test oscillator frequency and receiver dial to EXACTLY 1400 KILOCYCLES. Adjust 1400 kilocycles R. F. and antenna trimmers for maximum 1400 kilocycle signal sensitivity.

10. Leave band selector switch for operation on 540 to 1720 kilocycle band, tune receiver dial and set test oscillator frequency to approximately 600 kilocycles. While rocking gang condenser slightly to right and left adjust 600 kilocycle oscillator padder for maximum sensitivity.

VOLTAGE TABLE

LINE VOLTAGE : 115 VOLTS AC

MEASURE VOLTAGES BETWEEN CHASSIS AND SOCKET PRONGS

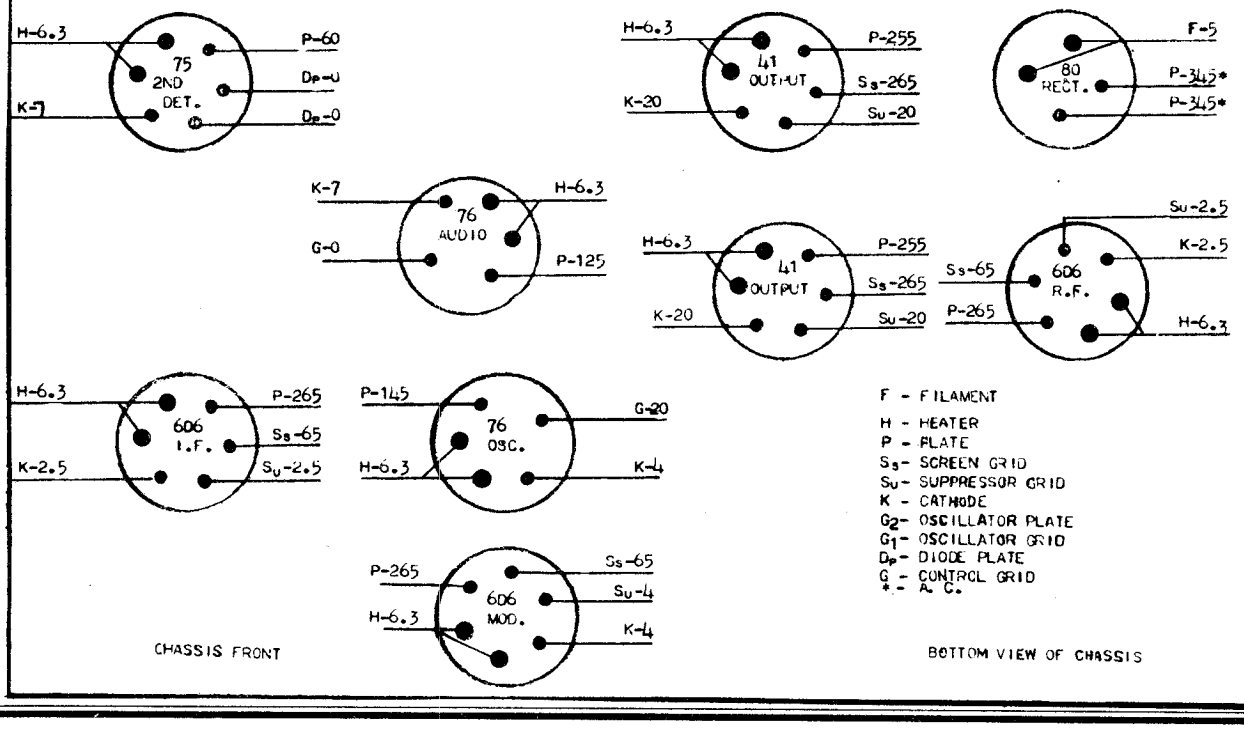

©John F. Rider, Publisher

Model 66B
Eight Tube
Six Volt Battery Operated Superheterodyne Receiver

ALIGNING I.F.STAGE AT 465 KILOCYCLES:

(a) Attach the ground lead of the test oscillator to the chassis. Connect the other lead to the grid cap of the 6A7 tube through a .02 Mfd. series condenser. DO NOT REMOVE GRID CLIP.
(b) Set test oscillator to EXACTLY 465 kilocycles and turn receiver volume control on full.
(c) Peak each of the second I. F. transformer trimmers.
(d) Peak each of the first I.F. transformer trimmers.
To assure most accurate trimmer setting repeat above adjustment several times always using lowest possible test oscillator output consistent with readable output meter scale deflection.

ALIGNING 1720-536 KILOCYCLE BAND:

(a) Check tuning dial adjustment by turning gang condenser until plates touch maximum capacity stop (completely in mesh), at which point the dial needle must be exactly even with the last line at the low frequency end of the dial calibration. If the dial needle does not point exactly to the last line move needle to correct position.
(b) Remove test oscillator lead from grid of 6A7 tube and connect to receiver antenna post through a .00025 Mfd. series condenser.
(c) Adjust band selector switch for operation on the 1720-536 kilocycle band.
(d) Set test oscillator frequency and receiver dial to EXACTLY 1720 kilocycles, and BRING IN 1720 KILOCYCLE TEST OSCILLATOR SIGNAL TO MAXIMUM OUTPUT BY ADJUSTING 1720 KILOCYCLE OSCILLATOR TRIMMER.
(e) Tune receiver dial and set test oscillator frequency to EXACTLY 1500 kilocycles. Adjust 1500 K.C., R.F. and antenna trimmers for maximum sensitivity.
(e) Set test oscillator frequency and receiver dial to approximately 600 kilocycles. Then while rocking gang condenser slightly to right and left, adjust 600 K. C. oscillator padder for maximum signal response.

ALIGNING 1.58-5.75 MEGACYCLE BAND:

(a) Replace .00025 Mfd. test oscillator antenna lead series condenser with a 400 ohm resistor.
(b) Adjust band selector switch to 1.58-5.75 megacycles, tune receiver dial and set test oscillator frequency to EXACTLY 5.75 megacycles. Bring in 5.75 megacycle test band signal to maximum output by adjusting 5.75 M.C. oscillator trimmer.
(c) Tune receiver dial and test oscillator frequency to EXACTLY 5 Megacycles, and adjust 5 M.C. antenna and R.F. trimmers for maximum sensitivity.
(d) Set test oscillator and receiver dial to approximately 1.8 megacycles. Then while rotating gang condenser slightly to right and left adjust 1.8 megacycle oscillator padder.

ALIGNING 5.65-20.25 MEGACYCLE BAND:

(a) Leave 400 ohm resistor in series with test oscillator lead and place band selector switch for operation on 5.65-20.25 megacycle band, tune receiver dial and set test oscillator frequency to EXACTLY 20.25 megacycles.

(b) Adjust 20.25 M.C. oscillator trimmer to bring in 20.25 megacycle test signal to maximum output.

NOTE: When adjusting this trimmer two peaks, the fundamental and the image peak will be noticed. CARE MUST BE TAKEN THAT THE FUNDAMENTAL PEAK AND NOT THE IMAGE PEAK IS USED FOR ALIGNING THE RECEIVER AT 20.25 MEGACYCLES. Always back off the trimmer to minimum capacity, then screw down the trimmer (add capacity) until the first peak which is the fundamental and the proper one to use is tuned in. If the trimmer is screwed down beyond the point where the first peak is received the incorrect image peak will be tuned in. After completing adjustment of the oscillator trimmer at 20.25 megacycles always check to see if the proper peak has been used. To do this leave test oscillator frequency at 20.25 megacycles, increase the output of the test oscillator and tune receiver dial to approximately 19.25 megacycles. Then vary the receiver dial slightly to the right and left of 19.25 megacycles, and if the fundamental peak was used in aligning at 20.25 megacycles the test oscillator signal will be heard at approximately 19.25 megacycles on the receiver dial.

(c) Tune receiver dial and set test oscillator frequency to EXACTLY 18 megacycles.

(d) Rock gang condenser slightly to right and left and adjust 18 M.C. antenna and R.F. trimmers for maximum 18 megacycle test signal response.

©John F. Rider, Publisher

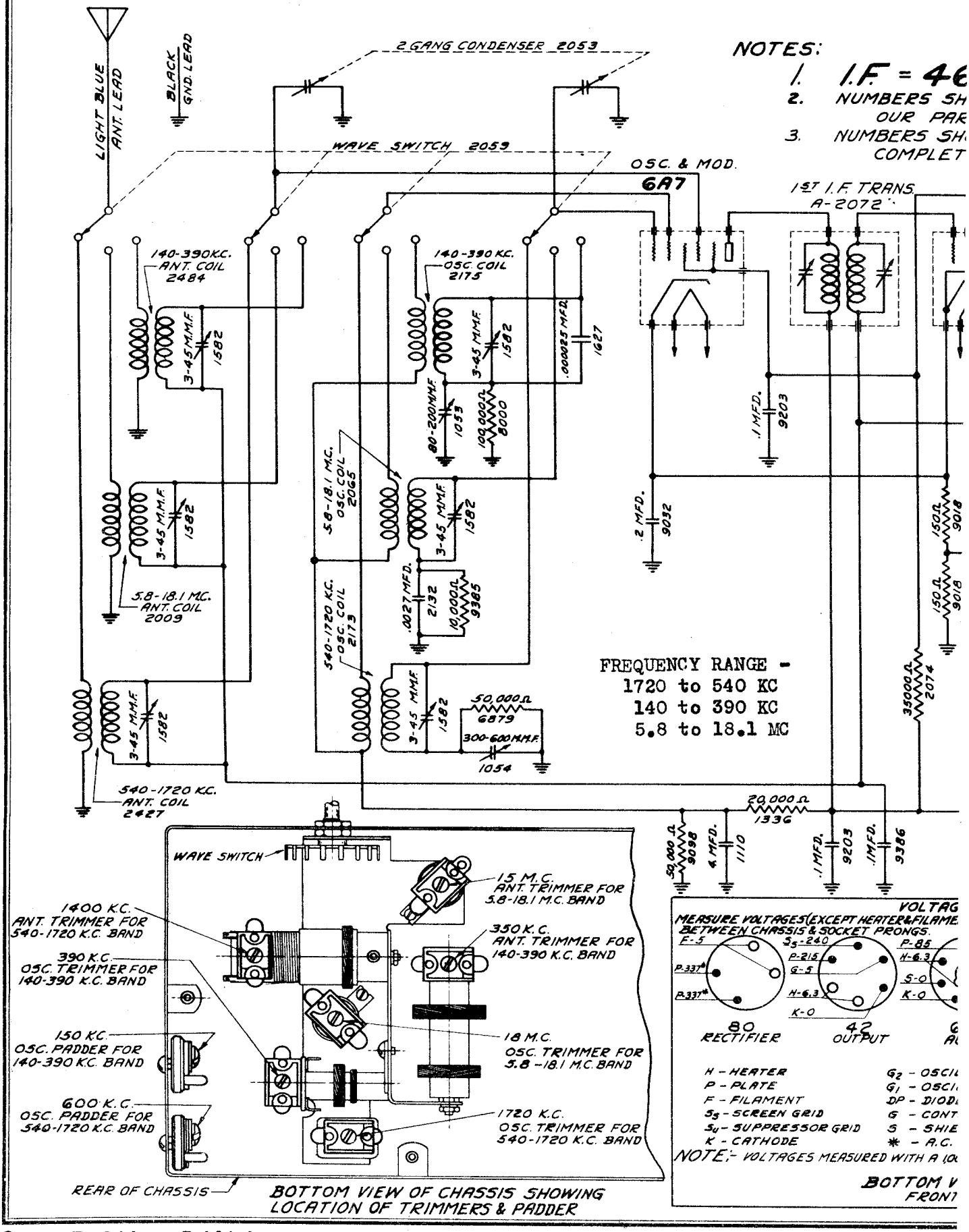

©John F. Rider, Publisher

. RADIO CORP.

MODEL 44 A Socket, Trimmers
Schematic, Parts Voltage

:5 K.C.
'OWN RELATIVE TO PARTS ARE
'T NUMBERS.
)WN WITH PREFIX "A" ARE
E ASSEMBLIES.

DYN. SPEAKER
5" DIA. = 2440
6" DIA. = 2078
8" DIA. = 2079
10" DIA. = 2461

VOICE COIL
BUCKING COIL
1350Ω FIELD COIL
OUTPUT TRANSFORMER
BROWN
GREEN
BLACK
YELLOW
SPEAKER SOCKET (TOP)

I.F. 6D6
2ND I.F. TRANS. A-2052
2ND DET. & A.V.C. 6H6
AUDIO 6F5
POWER AUDIO 42

.0005 MFD. 9459
.0005 MFD. 9459
.0005 MFD. 9459
.0005 MFD. 9459
.01 MFD. 1496
250,000Ω 1943
.004 MFD. 1150
.05 MFD. 1667
1 MEG Ω 7998
½ MEG Ω 6984
½ MEG Ω 6984
.01 MFD. 6573
1.25 VOLT BIAS CELL 1928
50,000 Ω TONE CONT. 2199
250,000Ω 890G
250,000Ω 1943
.1 MFD. 9386
16. MFD. 1476
TOGGLE SWITCH 6123
PHONO. JACKS
500,000Ω VOL. CONT. 2198
275Ω WW 25 STRIP 2485
12. MFD. 1477

FOR ALIGNMENT
SEE INDEX

0.250 AMP 6.3 VOLT PILOT LAMPS 2250
RECT. 80

POWER TRANSF.
(115 VOLT 50 CYC.) Nº 2049
(115-230 VOLT 50 CYC.) Nº 2050
(FULL UNIVERSAL) Nº 2051
LINE CORD & PLUG 6925
.01 MFD. 1496
S.P.S.T. SWITCH ON TONE CONTROL

E TABLE
NT)
LINE VOLTAGE:- 115 VOLTS
K_2-2.2
DP_2-0
H-6.3
S-0
K_1-0
DP_1-0
P-240
H-6.3
S_5-85
S_4-5
K
F5
IDIO
6H6
2ND DET. A.V.C.
6D6
I.F.
.LATOR PLATE
.LATOR GRID
E PLATE
ROL GRID
LD
)0 OHM PER VOLT METER.
'IEW OF CHASSIS
OF CHASSIS
H-6.3
K-5
G_1-10
P-240
S_5-85
G_2-125
6A7
MOD-OSC.

MODEL 46 A

Schematic, Parts, Socket, Voltage

SENTINEL R

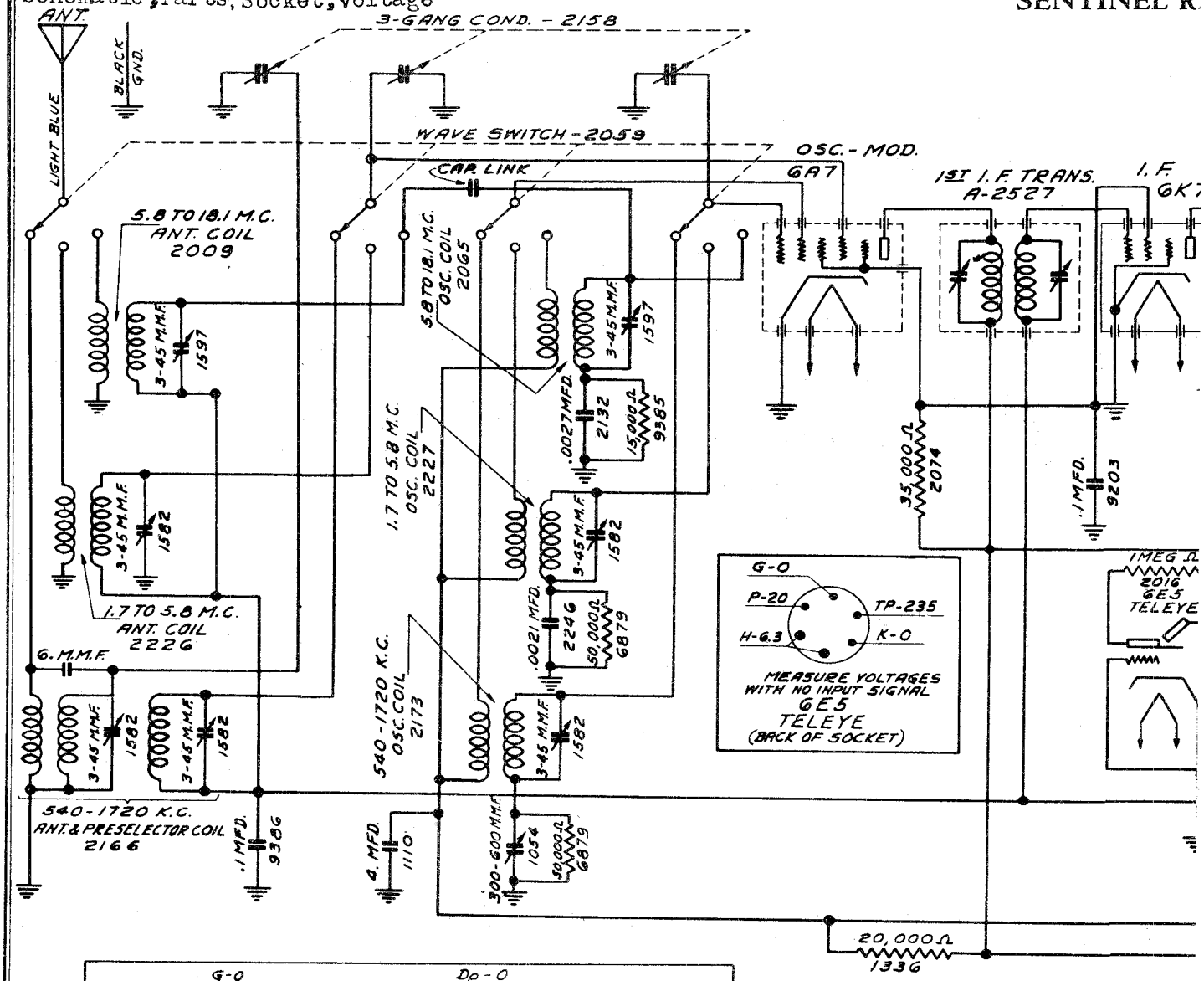

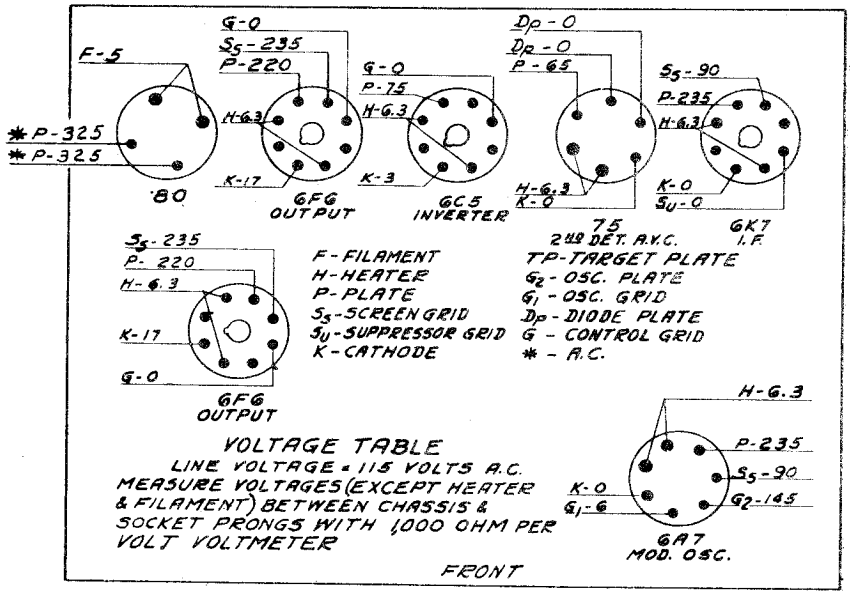

BOTTOM VIEW OF CHASSIS

NOTE:-

1. I.F. = 465

2. NUMBERS SHOWN R
ARE OUR PAR

3. NUMBERS SHOWN W
COMPLETE A

FREQUENCY RANGE -
1720 to
1.7 to
5.8 to 1

©John F. Rider, Publisher

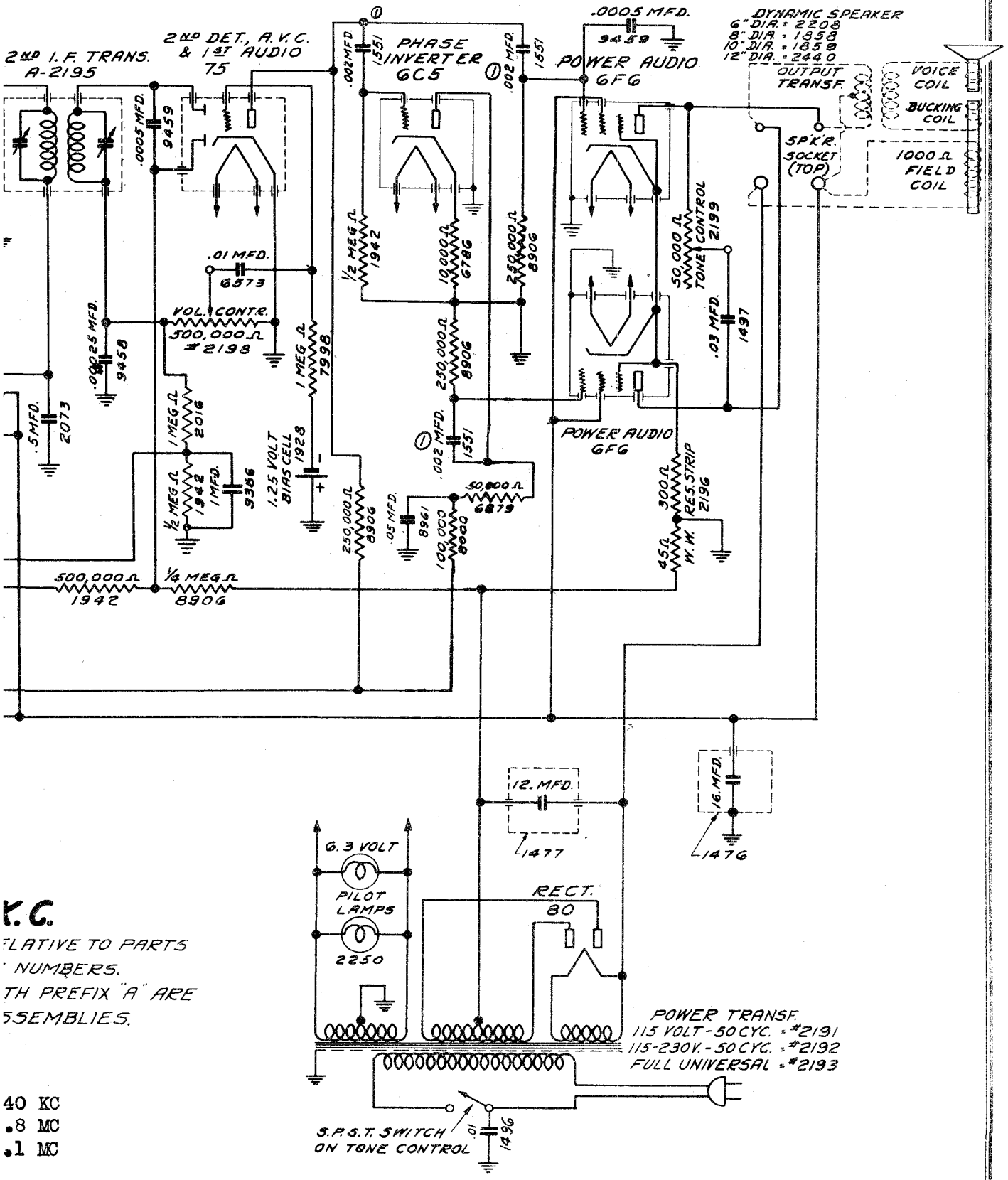

K.C.

FLATIVE TO PARTS
NUMBERS.
TH PREFIX "A" ARE
SSEMBLIES.

40 KC
.8 MC
.1 MC

©John F. Rider, Publisher

Model 44A
Six Tube A. C. Superheterodyne Receiver

INTERMEDIATE ALIGNMENT:

1. Connect the high side of the test oscillator output to the control grid of the 6A7 modulator tube through a .02 Mfd. condenser. Leave the grid cap connected to the grid terminal of the tube, and connect the ground side of the test oscillator to the receiver ground.
2. Set the test oscillator frequency to 465 kilocycles (this must be accurate).
3. Align the second intermediate transformer by turning one ot the trimmer screws accessible through holes in the top of the transformer shields up and down (increasing and decreasing capacity) until maximum reading is obtained on the output meter, after which adjust the other trimmer screw of the same transformer for maximum sensitivity.
4. Adjust the first intermediate transformer in the same manner as the second I. F. transformer.

TO ALIGN THE VARIABLE CONDENSER:

It is important when aligning the gang condenser, padding and trimmer condensers to follow the procedure carefully, otherwise the receiver will be insensitive and the dial calibration will be incorrect. The padding and trimmer condensers located underneath the chassis will be referred to by their function as indicated on the circuit diagram.

1. Connect the high output side of the test oscillator through a 400 ohm resistor to the receiver antenna lead and the low side to the set ground.
2. Place the band selector switch for operation on the 5.8 to 18.1 megacycle band, tune the receiver dial, and set the test oscillator frequency to EXACTLY 18 MEGACYCLES.

Bring in the 18 MEGACYCLE SIGNAL TO MAXIMUM OUTPUT BY ADJUSTING THE 18 MEGACYCLE OSCILLATOR TRIMMER. When adjusting this trimmer two peaks, the fundamental and the image peak will be noticed. CARE MUST BE TAKEN THAT THE FUNDAMENTAL PEAK AND NOT THE IMAGE PEAK IS USED FOR ALIGNING THE RECEIVER at 18 MEGACYCLES. Always back off the trimmer to minimum capacity, then screw down the trimmer (add capacity) until the first peak which is the fundamental and the proper one to use is tuned in. If the trimmer is screwed down beyond the point where the first peak is received, the incorrect image peak will be tuned in.

3. With band selector switch set for operation on 5.8-18.1 megacycle band tune the receiver dial and set test oscillator frequency to EXACTLY 15 MEGACYCLES. Adjust 15 megacycle antenna trimmer to maximum 15 megacycle signal sensitivity.
4. Replace the 400 ohm resistor in series with test oscillator lead with a 200 Mmfd. condenser, place the band selector switch for operation on the 1720-540 kilocycle band and set test oscillator frequency and receiver dial to EXACTLY 1720 KILOCYCLES. BRING IN THE 1720 KILOCYCLE SIGNAL TO MAXIMUM OUTPUT BY ADJUSTING 1720 KILOCYCLE OSCILLATOR TRIMMER.
5. With band selector switch placed for operation on the 1720-540 kilocycle band set test oscillator frequency and receiver dial to EXACTLY 1400 KILOCYCLES. Adjust 1400 antenna trimmer for maximum 1400 kilocycle signal sensitivity.
6. Leave band selector switch for operation on 1720-540 kilocycle band, tune receiver dial and set test oscillator frequency to approximately 600 kilocycles. While rocking gang condenser slightly to right and left adjust 600 kilocycles padder for maximum sensitivity.
7. Place band selector switch for operation on the 390-140 kilocycle band, and set test oscillator frequency and receiver dial to EXACTLY 390 KILOCYCLES. BRING IN THE 390 KILOCYCLE SIGNAL TO MAXIMUM OUTPUT WITH 390 KILOCYCLE OSCILLATOR TRIMMER.
8. With band selector switch set for operation on 390-140 kilocycle band, tune the receiver dial and set test oscillator frequency to EXACTLY 350 KILOCYCLES. Adjust 350 kilocycle antenna trimmer for maximum 350 kilocycle signal response.
9. Leave band selector switch for operation on the 390-140 kilocycle band, tune receiver dial and set test oscillator frequency to approximately 150 kilocycles. Then while rocking gang condenser slightly to right and left adjust 150 kilocycle padding condenser for maximum sensitivity.

Model 46A Eight Tube A. C. Superheterodyne Receiver

INTERMEDIATE ALIGNMENT:

1. Connect the high side of the test oscillator output to the control grid of the 6D6 modulator tube through a .02 Mfd. condenser. Leave the grid cap connected to the grid terminal of the tube, and connect the ground side of the test oscillator to the receiver ground.
2. Set the test oscillator frequency to 465 kilocycles (this must be accurate).
3. Align the second intermediate transtormer by turning one of the trimmer screws accessible through holes in the top of the transformer shields up and down (increasing and decreasing capacity) until maximum reading is obtained on the output meter, after which adjust the other trimmer screw of the same transformer for maximum sensitivity.
4. Adjust the first intermediate transformer in the same manner as the second I. F. transformer.

TO ALIGN THE VARIABLE CONDENSER:

It is important when aligning the gang condenser, padding and trimmer condensers to follow the procedure carefully, otherwise the receiver will be insensitive and the dial calibration will be incorrect. The padding and trimmer condensers located underneath the chassis will be referred to by their function as indicated on the circuit diagram.

1. Connect the high output side of the test oscillator through a 400 ohm resistor to the receiver antenna lead and the low side to the set ground.
2. Place the band selector switch for operation on the 5.8 to 18.1 megacycle band, tune the receiver dial, and set the test oscillator frequency to EXACTLY 18.1 MEGACYCLES.

Tune in the 18.1 MEGACYCLE SIGNAL TO MAXIMUM OUTPUT BY ADJUSTING THE 18.1 MEGACYCLE OSCILLATOR TRIMMER. When adjusting this trimmer two peaks, the fundamental and the image peak will be noticed. CARE MUST BE TAKEN THAT THE FUNDAMENTAL PEAK AND NOT THE IMAGE PEAK IS USED FOR ALIGNING THE RECEIVER at 18.1 MEGACYCLES. Always back off the trimmer to minimum capacity, then screw down the trimmer (add capacity) until the first peak which is the fundamental and the proper one to use is tuned in. If the trimmer is screwed down beyond the point where the first peak is received, the incorrect image peak will be tuned in. After completing adjustment of the oscillator trimmer at 18.1 megacycles always check to see if the proper peak has been used. To do this leave the test oscillator frequency at 18.1 megacycles, increase the output of the test oscillator and tune the receiver dial to approximately 17.1 megacycles, and if the fundamental peak was used in aligning at 18.1 megacycles the test oscillator signal will be heard at approximately 17.1 megacycles on the receiver dial. If it is not possible to receive the signal, then the fundamental peak was not used and the 18.1 megacycle oscillator trimmer must be properly readjusted.

3. With band selector switch set for operation on 5.8 to 18.1 megacycle band tune the receiver dial and set test oscillator frequency to EXACTLY 16 MEGACYCLES. Adjust 16 megacycle antenna trimmer for maximum 16 megacycle signal sensitivity.
4. Place band selector switch for operation on 1.7 to 5.8 megacycle band, tune the receiver dial, and set test oscillator frequency to EXACTLY 5.8 MEGACYCLES. BRING IN 5.8 MEGACYCLE SIGNAL TO MAXIMUM OUTPUT by adjusting 5.8 megacycle oscillator trimmer.
5. With the band selector switch set for operation on the 1.7 to 5.8 megacycle band tune receiver dial and set test oscillator frequency to EXACTLY 5 MEGACYCLES. Then adjust 5 megacycle antenna trimmer for maximum 5 megacycle signal sensitivity.
6. Replace the 400 ohm resister in series with test oscillator lead with a 200 Mmfd. condenser, place the band selector switch for operation on the 540 to 1720 kilocycle band, tune receiver dial, and set test oscillator frequency to EXACTLY 1720 KILOCYCLES. NEXT BRING IN THE 1720 KILOCYCLE SIGNAL TO MAXIMUM OUTPUT BY ADJUSTING 1720 KILOCYCLE OSCILLATOR TRIMMER.
7. With band selector switch placed for operation on the 540 to 1720 kilocycle band set test oscillator frequency and receiver dial to EXACTLY 1400 KILOCYCLES. Adjust 1400 kilocycle preselector and antenna trimmers for maximum 1400 kilocycle signal sensitivity.
8. Leave band selector switch for operation on 540 to 1720 kilocycle band, tune receiver dial and set test oscillator frequency to approximately 600 kilocycles. While rocking gang condenser slightly to right and left adjust 600 kilocycle oscillator padder for maximum sensitivity.

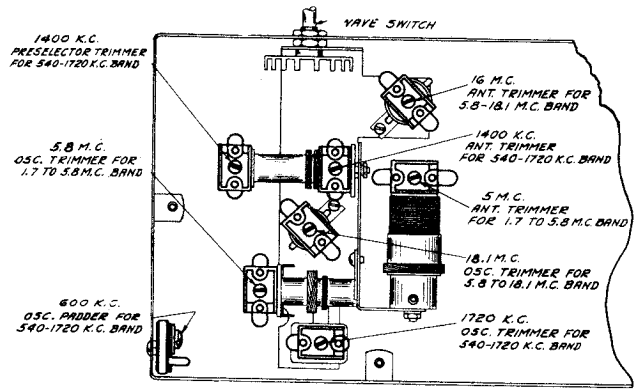

BOTTOM VIEW OF CHASSIS SHOWING LOCATION OF TRIMMERS & PADDER

MODEL 560 TV
Schematic
Parts

SENTINEL RADIO CORP.

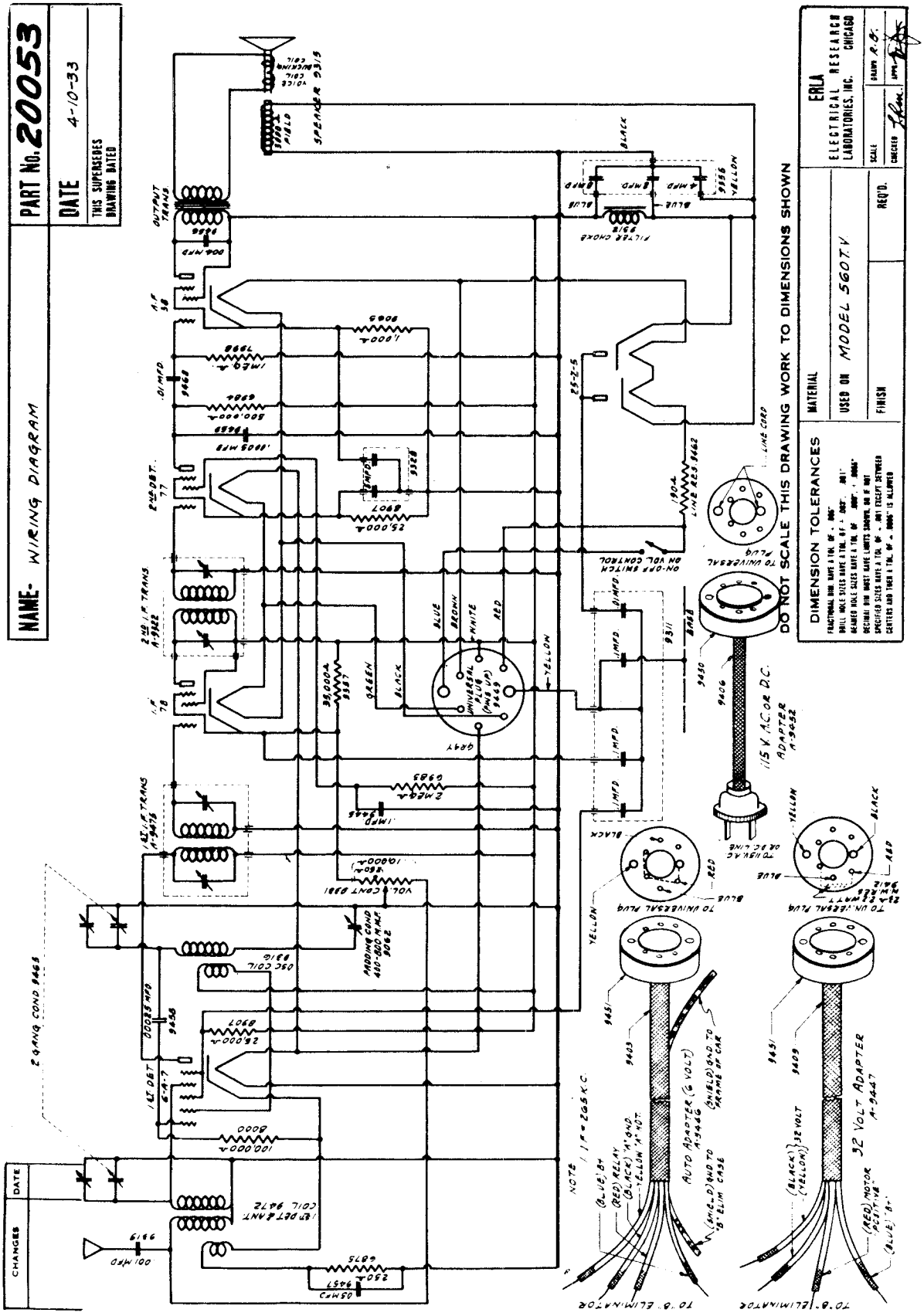

©John F. Rider, Publisher

SENTINEL RADIO CORP.

MODELS 72 A, 72 AE
Schematic, Parts
Socket, Voltage

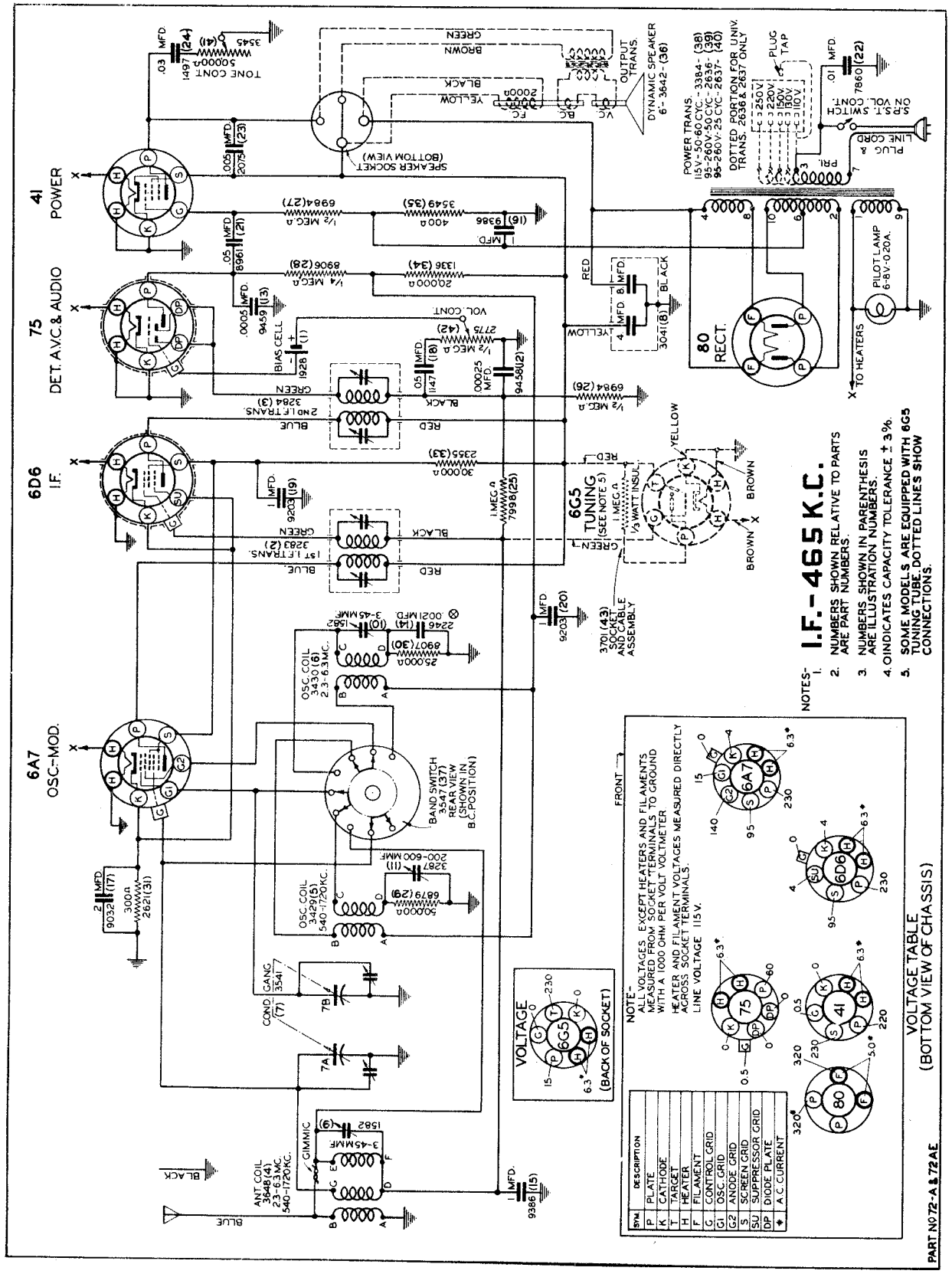

©John F. Rider, Publisher

MODELS 72 A, 72 AE
Socket, Trimmers
Chassis, Alignment

SENTINEL RADIO CORP.

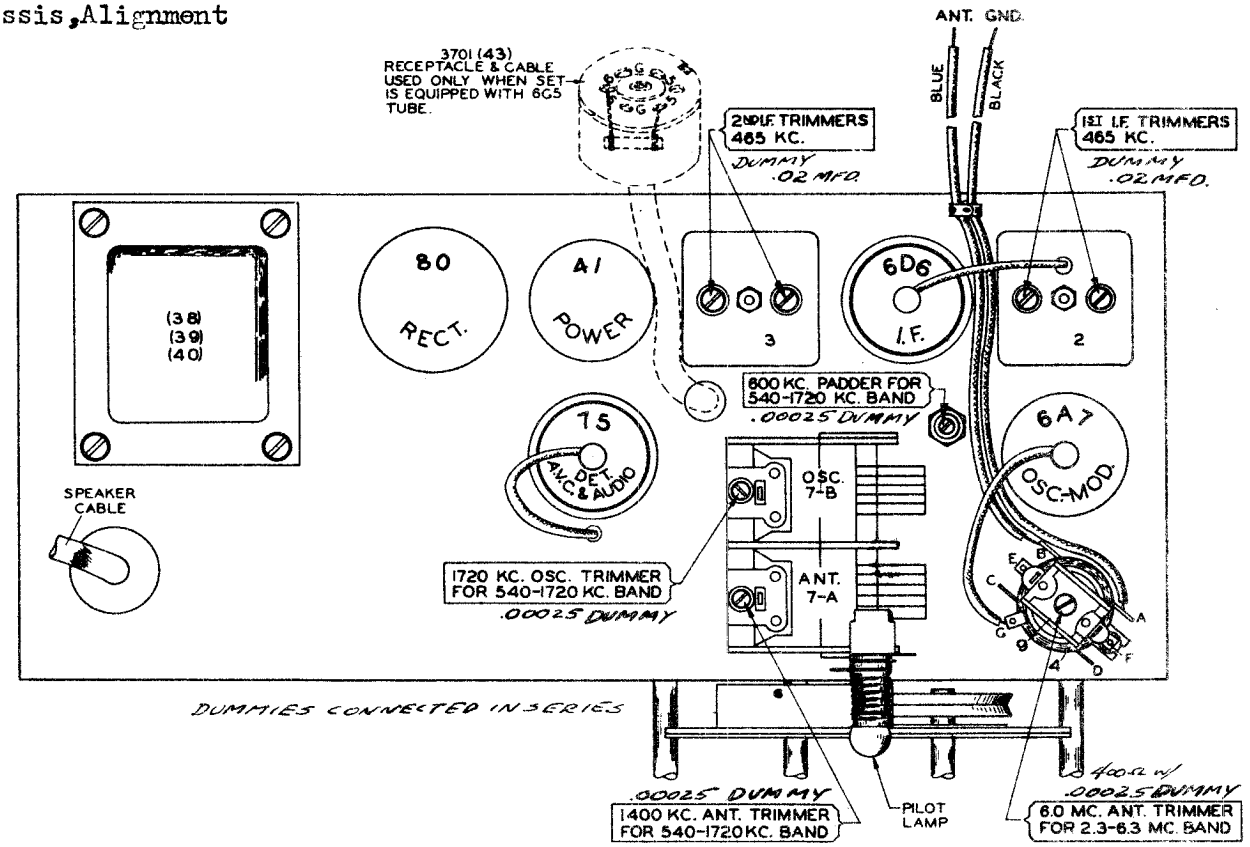

CONVENTIONAL ALIGNMENT SEE SPECIAL SECTION VOL. VIII.

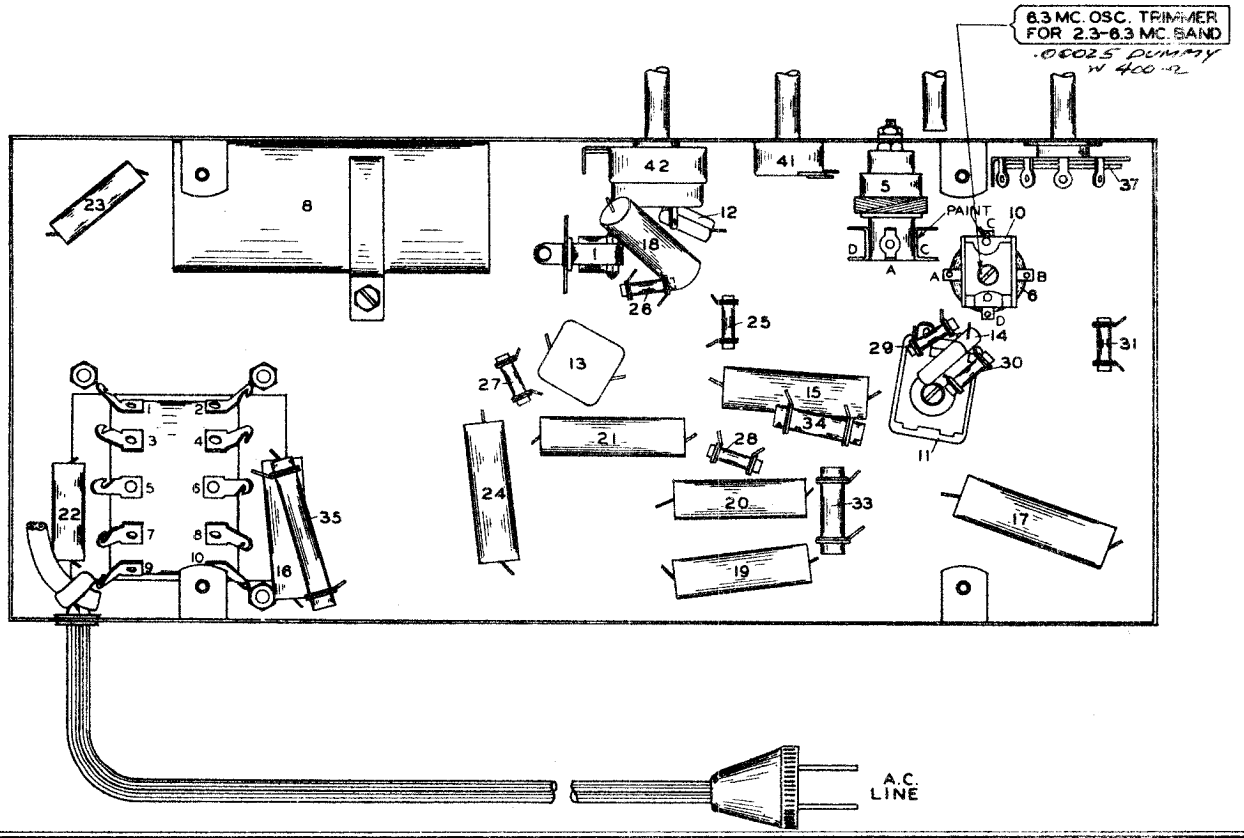

©John F. Rider, Publisher

SENTINEL RADIO CORP.

MODELS 74 A, 74 AE
Schematic, Parts
Socket, Voltage

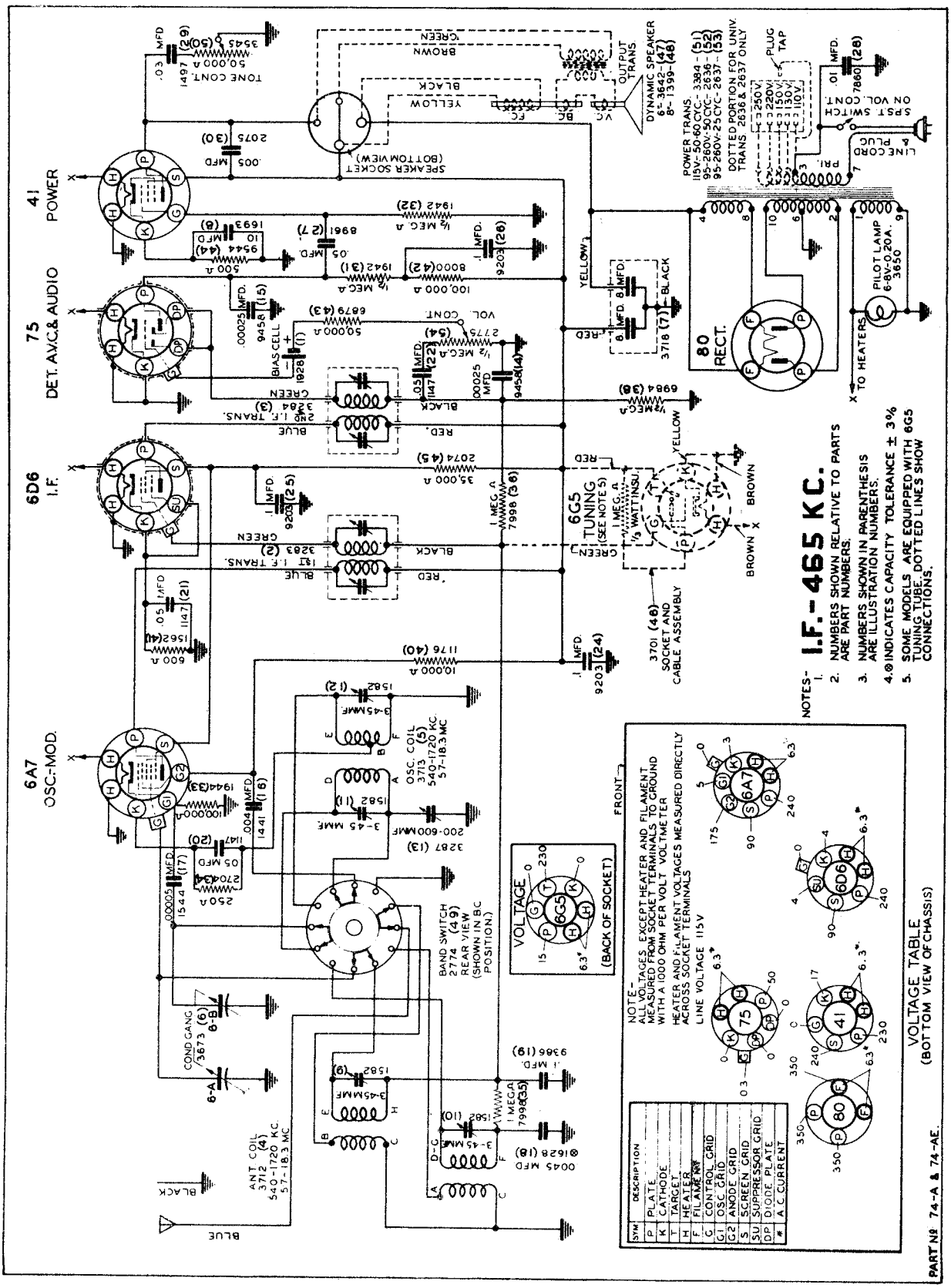

©John F. Rider, Publisher

MODELS 74 A, 74 AE
Socket, Trimmers
Chassis, Alignment

SENTINEL RADIO CORP.

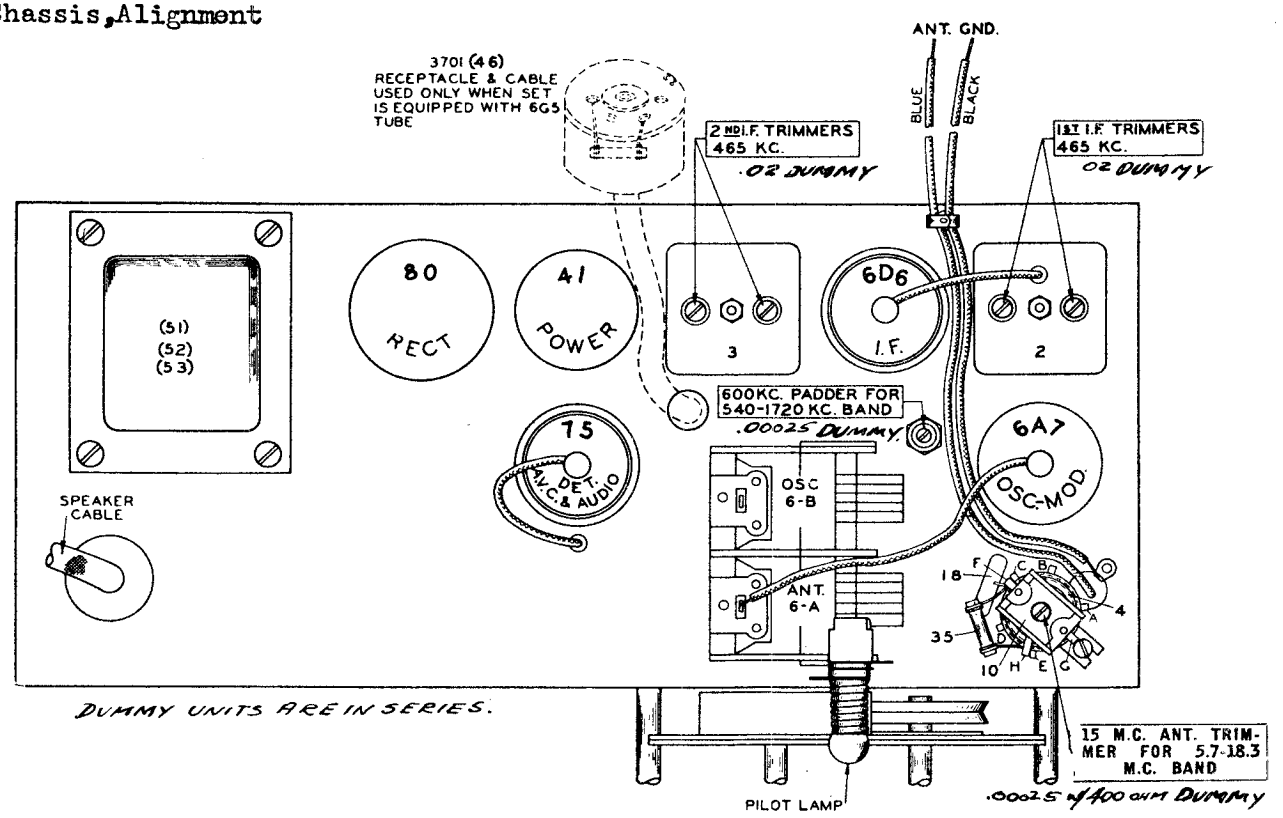

CONVENTIONAL ALIGNMENT SEE SPECIAL SECTION VOL. VIII.

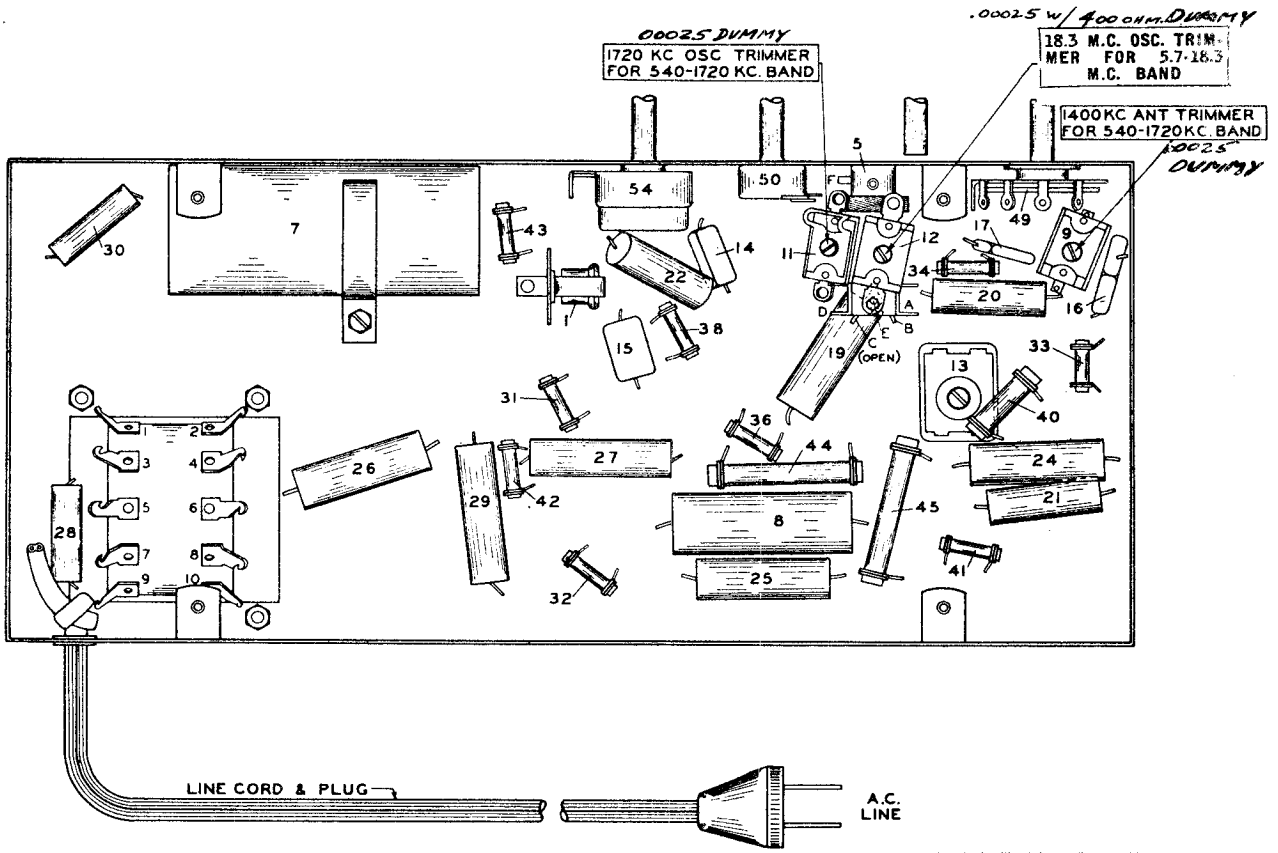

©John F. Rider, Publisher

SENTINEL RADIO CORP.

MODEL 76 A
Schematic, Parts
Socket, Voltage

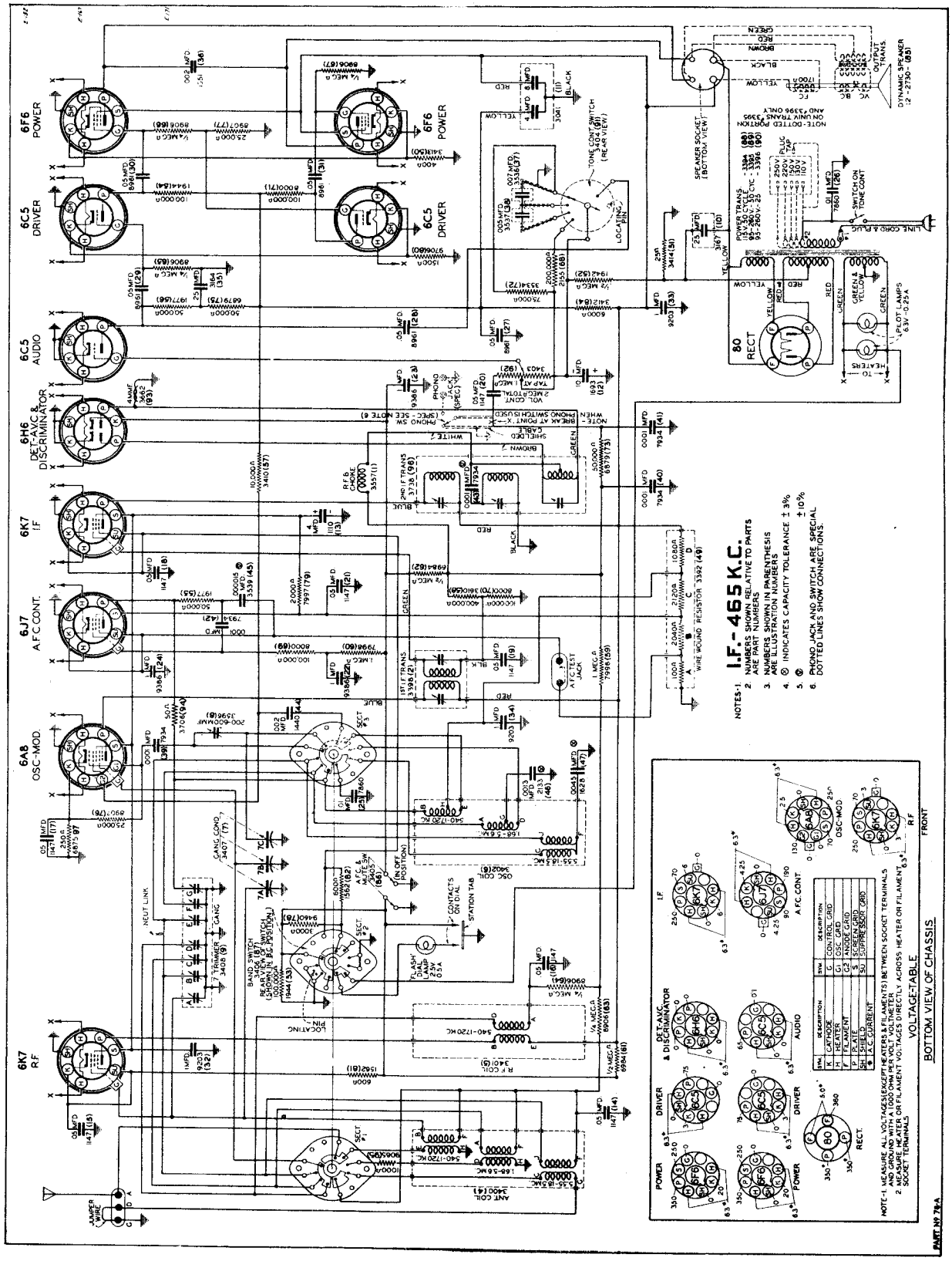

©John F. Rider, Publisher

MODEL 76 A
Socket, Trimmers
Chassis

SENTINEL RADIO CORP.

PARTS LAYOUT FOR MODEL 76-A RECEIVER.

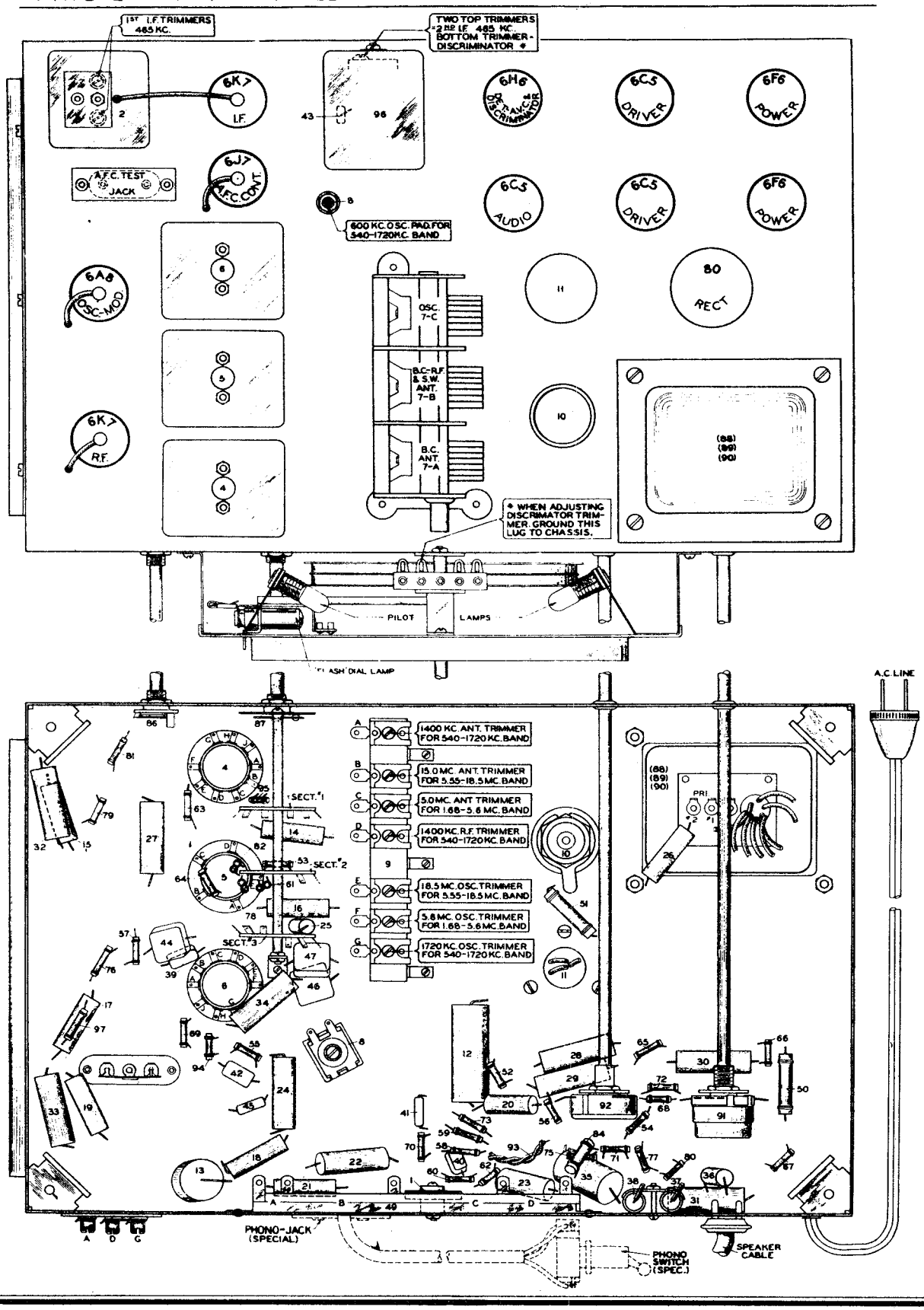

©John F. Rider, Publisher

©John F. Rider, Publisher

ALIGNING I.F. STAGE AT 465 KILOCYCLES:

(a) Place automatic frequency control in the maximum left hand A.F.C. "off" position.

(b) Attach the ground lead of the test oscillator to the chassis. Connect the other lead to the grid cap of the 6A8 tube through a .02 Mfd. series condenser. DO NOT REMOVE GRID CLIP.

(c) Set test oscillator to EXACTLY 465 kilocycles and turn volume control on full.

(d) Remove shields held in position by snap fasteners over A.F.C. test jack and over trimmer screw holes in the first and second I.F. transformer shield cans.

(e) Peak second I.F. transformer trimmers for maximum 465 kilocycle output by adjusting the two trimmers accessible through the two top holes in the second I.F. transformer shield can. DO NOT TOUCH DISCRIMINATOR (BOTTOM) SCREW.

(f) Peak each of the first I.F. transformer trimmers for maximum 465 kilocycle signal output.

ALIGNING 1720-540 KILOCYCLE BAND:

(a) Check tuning dial adjustment by turning gang condenser until plates touch maximum capacity stop (completely in mesh), at which point the dial needle must be exactly even with the last line at the low frequency end of the dial calibration. If the dial needle does not point exactly to the last line, move needle to correct position.

(b) Remove test oscillator lead from grid of 6A8 tube and connect to receiver "A" antenna post through a .00025 Mfd. condenser.

(c) Adjust A.F.C. control to maximum left hand A.F.C. "off" position and band selector switch for operation on the 1720-540 kilocycle band.

(d) Set test oscillator frequency and receiver dial to EXACTLY 1720 kilocycles, and BRING IN 1720 KILOCYCLE TEST OSCILLATOR SIGNAL TO MAXIMUM OUTPUT BY ADJUSTING 1720 KILOCYCLE OSCILLATOR TRIMMER.

(e) Tune receiver dial and set test oscillator frequency to EXACTLY 1400 kilocycles. Adjust 1400 K.C. R.F. and antenna trimmers for maximum sensitivity.

(f) Set test oscillator frequency and receiver dial to approximately 600 kilocycles. Then while rocking gang condenser slightly to right and left, adjust 600 K.C. oscillator padder for maximum signal response.

ALIGNING DISCRIMINATOR CIRCUIT:

(a) After completing 1720-540 kilocycle adjustment, set test oscillator to EXACTLY 465 KILOCYCLES and connect to grid of 6A8 tube through a .02 Mfd. Condenser—insert lead of double scale 0 to 1 and 0 to 5 milliammeter into A.F.C. test jack located on top of chassis adjacent to the 6L7 tube. To avoid possibility of damaging the meter should one of the milliammeter leads short to the metal chassis, ALWAYS TURN OFF RECEIVER WHEN INSERTING OR REMOVING MILLIAMMETER LEADS FROM A.F.C. TEST JACK.

(b) Short out A.F.C. mute switch by grounding the second from the left (looking at the front of the chassis) of the four lugs mounted on top of the dial assembly. The proper lug to ground is indicated in the "Note X" on chassis top parts view.

(c) Turn receiver on, place A.F.C. switch knob in A.F.C. "on" position and if meter needle jumps off scale adjust output of test oscillator until an approximate 2 M.A. deflection is obtained on the 0 to 5 milliammeter scale.

(d) Place band selector switch for operation on 1720-540 K.C. broadcast band—and set receiver dial somewhere near 1000 kilocycles at a point where no station is heard.

(e) Rotate A.F.C. switch knob from A.F.C. "on" to A.F.C. "off" position and note whether the milliammeter reading changes as the position of the A.F.C. switch is changed. No change in reading indicates probable proper discriminator trimmer adjustment, while a noticeable change indicates improper discriminator trimmer adjustment.

(f) IMPORTANT: DO NOT ADJUST DISCRIMINATOR TRIMMER UNLESS IT IS ABSOLUTELY NECESSARY. Place A.F.C. switch in A.F.C. "off" position and note milliammeter reading, then place A.F.C. switch in A.F.C. "on" position and CAREFULLY ADJUST DISCRIMINATOR TRIMMER UNTIL MILLIAMMETER READING IS EXACTLY THE SAME AS IT WAS WITH THE A.F.C. SWITCH IN THE "OFF" POSITION.

NOTE: As the discriminator trimmer screw is screwed in (increasing capacity) the milliammeter reading should decrease ahd as the discriminator trimmer is unscrewed (decreasing capacity) the milliammeter reading should increase. IF WHEN ADJUSTING THE DISCRIMINATOR TRIMMER THE MILLIAMMETER READING DOES NOT SHARPLY INCREASE OR DECREASE AS THE TRIMMER IS ADJUSTED EVEN AFTER SEVERAL TURNS OF THE TRIMMER SCREW, THIS DOES NOT INDICATE PROPER BALANCING BUT DOES INDICATE INCORRECT ADJUSTMENT AND THE DISCRIMINATOR TRIMMER SHOULD BE SET TO ABOUT ½ CAPACITY AND THE ADJUSTMENT OF THE DISCRIMINATOR TRIMMER MADE ALL OVER AGAIN.

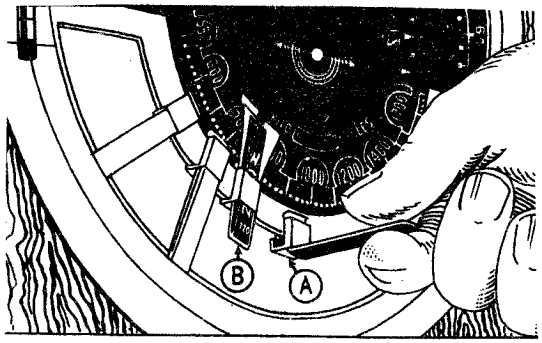

Above Diagram shows method of inserting and setting tabs.

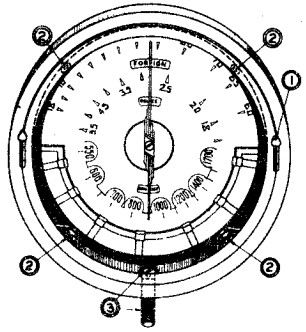

ALIGNING 1.68-5.6 MEGACYCLE BAND:

(a) Replace .00025 Mfd. test oscillator antenna lead series condenser with a 400 ohm resistor.

(b) Adjust band selector switch to 1.68-5.6 megacycles, tune receiver dial and set test oscillator frequency to EXACTLY 5.6 megacycles. Bring in 5.6 megacycle test signal to maximum output by adjusting 5.6 M. C. oscillator trimmer.

(c) Tune receiver dial and test oscillator frequency to EXACTLY 5 Megacycles and adjust 5 M.C. antenna trimmer for maximum sensitivity.

ALIGNING 5.55-18.5 MEGACYCLE BAND:

(a) Leave 400 ohm resistor in series with test oscillator lead and place band selector switch for operation on 5.55-18.5 megacycle band, tune receiver dial and set test oscillator frequency to EXACTLY 18.5 megacycles.

(b) Adjust 18.5 M.C. oscillator trimmer to bring in 18.5 megacycle test signal to maximum output.

NOTE: When adjusting this trimmer two peaks, the fundamental and the image peak will be noticed. CARE MUST BE TAKEN THAT THE FUNDAMENTAL PEAK AND NOT THE IMAGE PEAK IS USED FOR ALIGNING THE RECEIVER AT 18.5 MEGACYCLES. Always back off the trimmer to minimum capacity, then screw down the trimmer (add capacity) until the FIRST peak which is the fundamental and the proper one to use is tuned in. If the trimmer is screwed down beyond the point where the first peak is received the incorrect image peak will be tuned in. After completing adjustment of the oscillator trimmer at 18.5 megacycles, always check to see if the proper peak has been used. To do this leave test oscillator frequency at 18.5 megacycles, increase the output of the test oscillator and tune receiver dial to approximately 17.5 megacycles. Then vary the receiver dial slightly to the right and left of 17.5 megacycles, and if the fundamental peak was used in aligning at 18.5 megacycles the test oscillator signal will be heard at approximately 17.5 megacycles on the receiver dial.

(c) Tune receiver dial and set test oscillator frequency to EXACTLY 15 megacycles.

(c) Rock gang condenser slightly to right and left and adjust 15 M.C. antenna trimmer for maximum 15 megacycle test signal response.

To assure more accurate trimmer setting, repeat all above adjustments several times always using lowest possible test oscillator output consistent with readable output meter scale deflection.

PROCEDURE FOR REMOVING RECEIVER FROM CABINET.

1. Unscrew the two knurled head screws mounted on front of the glass frame and then holding onto the screws pull dial glass away from the cabinet.
2. Swing 'rapid tuning' lever to center position as shown, loosen (do not remove) screw thru hole in bottom center, and remove lever knob.
3. Loosen set screws on all five tuning knobs, and remove knobs from shafts. (Not shown in sketch).
4. Remove four bolts at bottom side of chassis mtg. shelf (not shown in sketch.)
5. Remove wood screws on the pressure brackets at rear of chassis (not shown in sketch) and then slide receiver out of cabinet.
6. When replacing receiver in cabinet, reverse entire procedure given above.

MODELS 85,85 UE
Schematic,Parts

SENTINEL RADIO CORP.

Socket,Voltage
Alignment

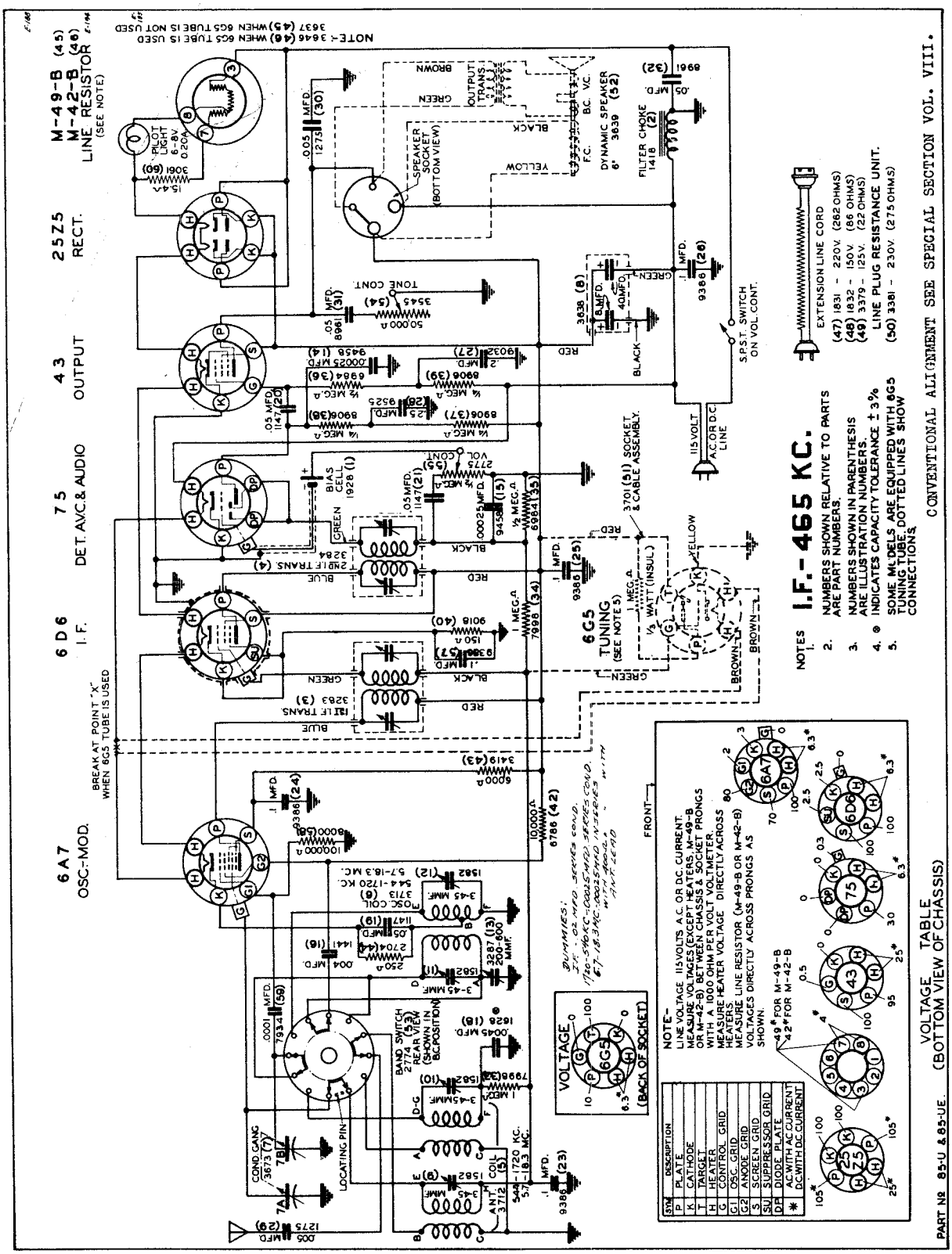

©John F. Rider, Publisher

SENTINEL RADIO CORP.

MODELS 82 A, 82 AE
Schematic, Parts
Socket, Voltage

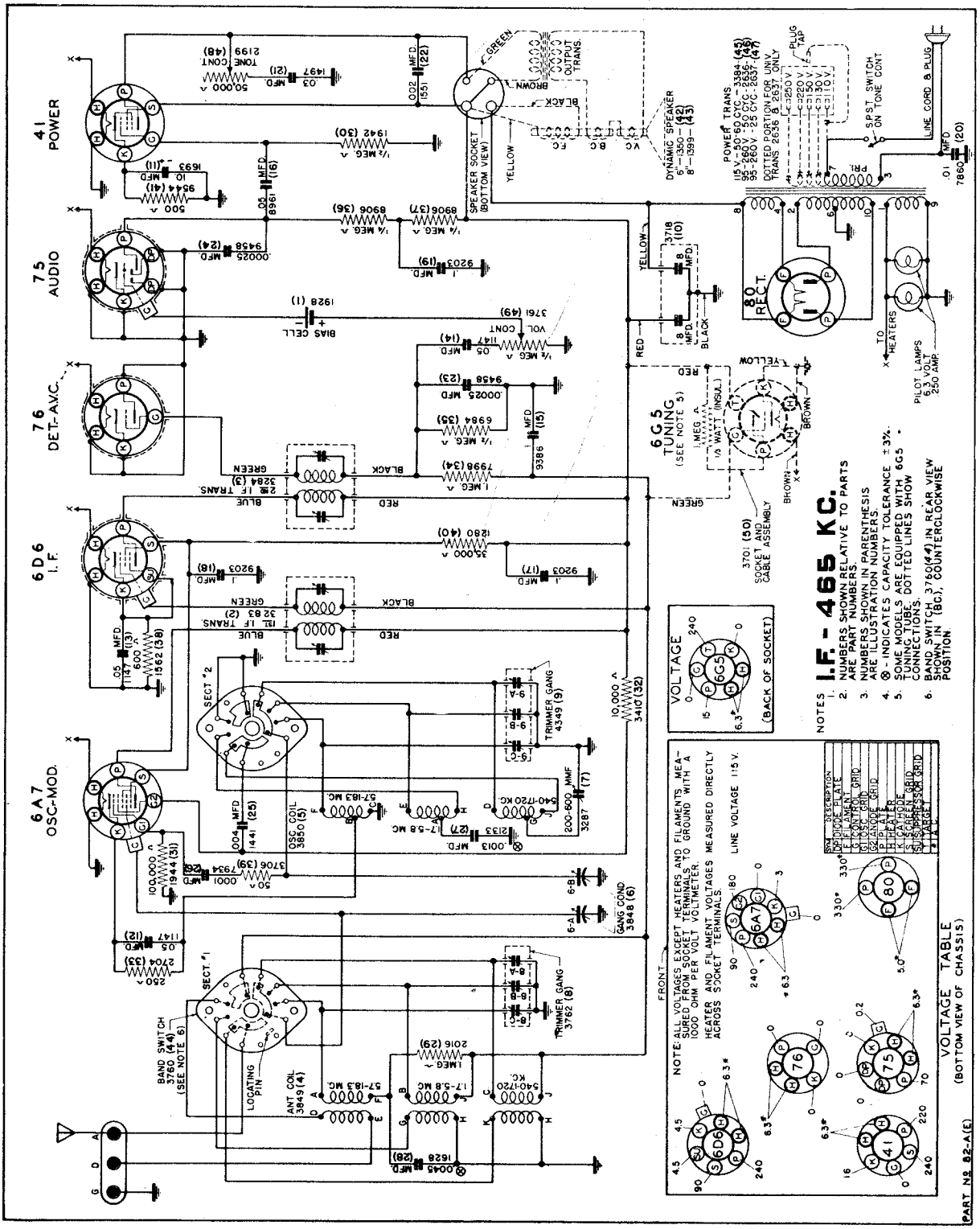

©John F. 'Rider, Publisher

MODELS 82 A, 82 AE
Socket, Trimmers
Chassis, Alignment

SENTINEL RADIO CORP.

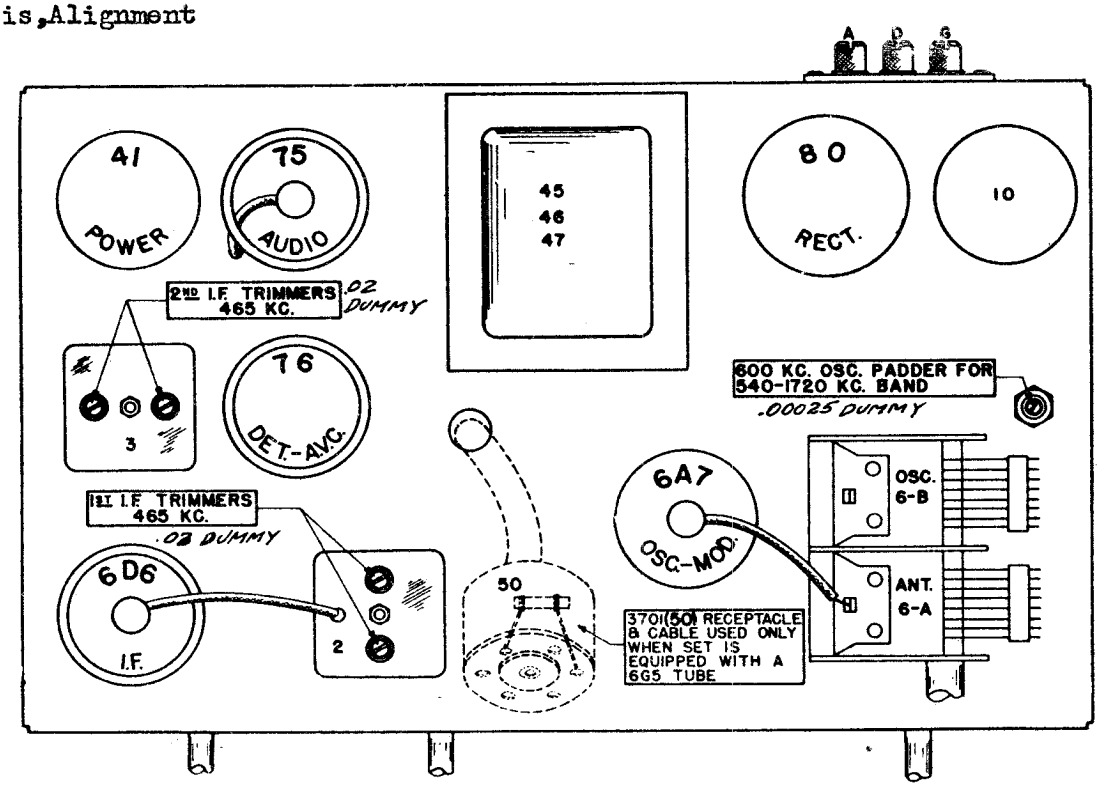

CONVENTIONAL ALIGNMENT SEE SPECIAL SECTION VOL. VIII.

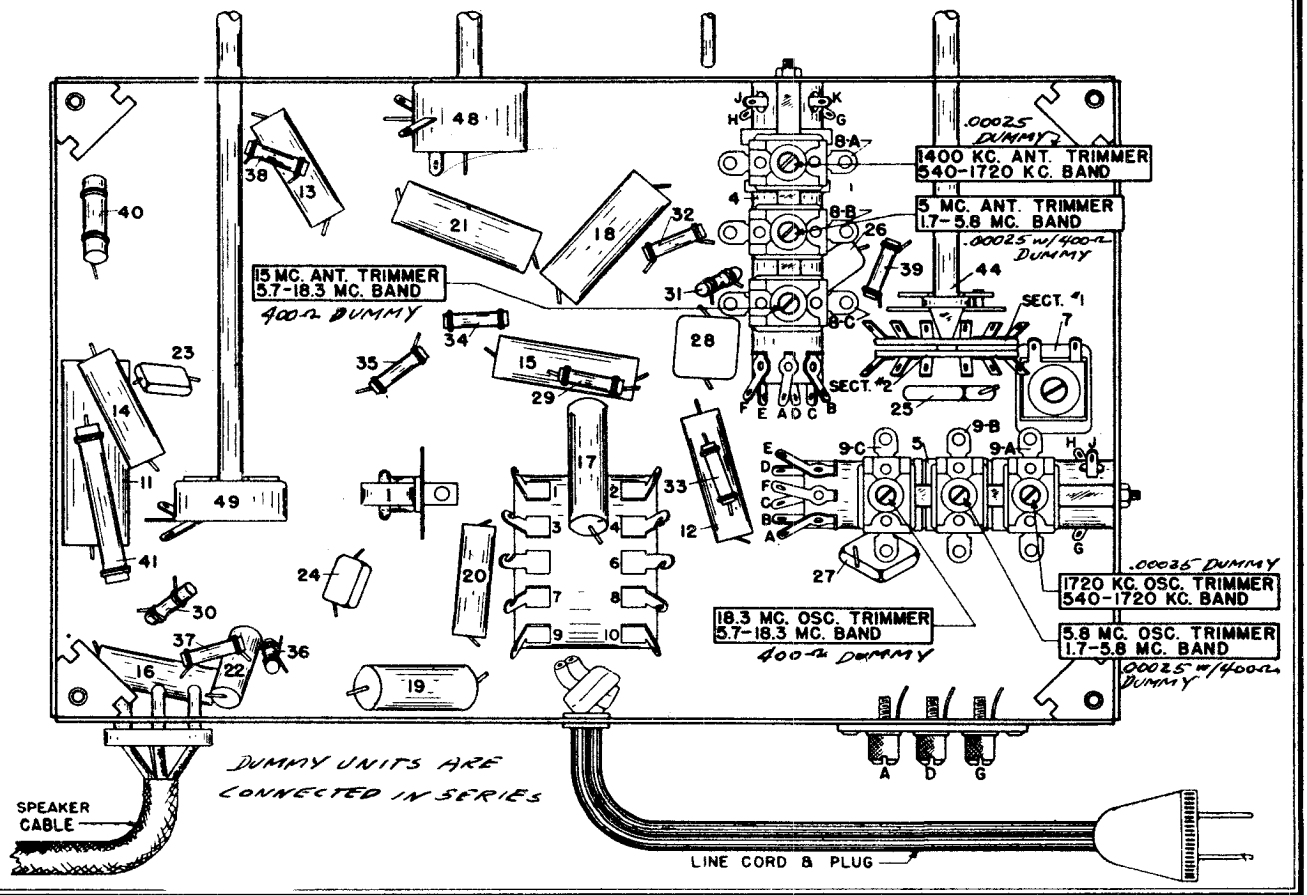

©John F. Rider, Publisher

SENTINEL RADIO CORP.

MODEL 90 B
Schematic, Parts
Socket, Voltage

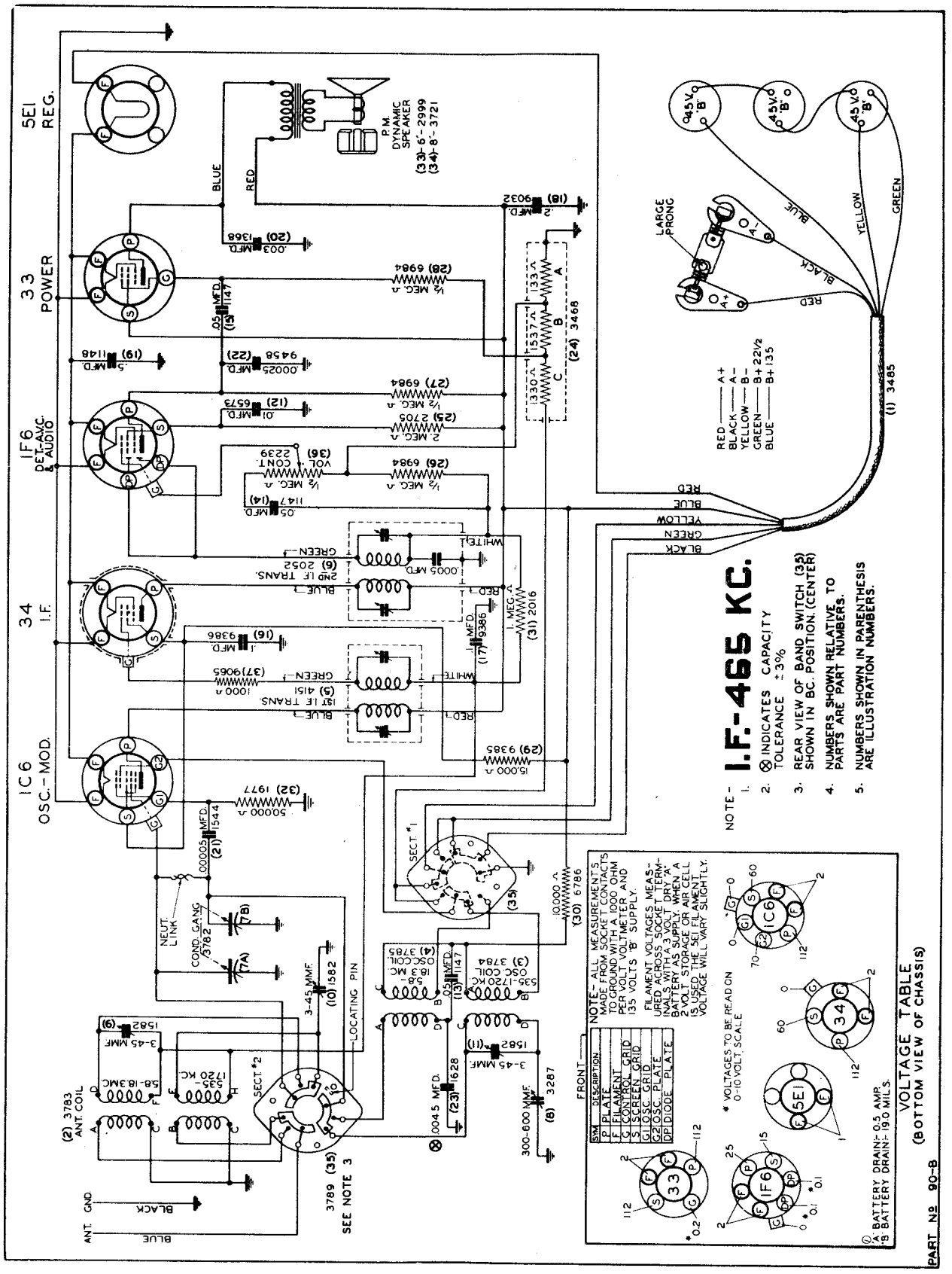

©John F. Rider, Publisher

MODEL 90 B
Socket, Trimmers
Chassis, Alignment

SENTINEL RADIO CORP.

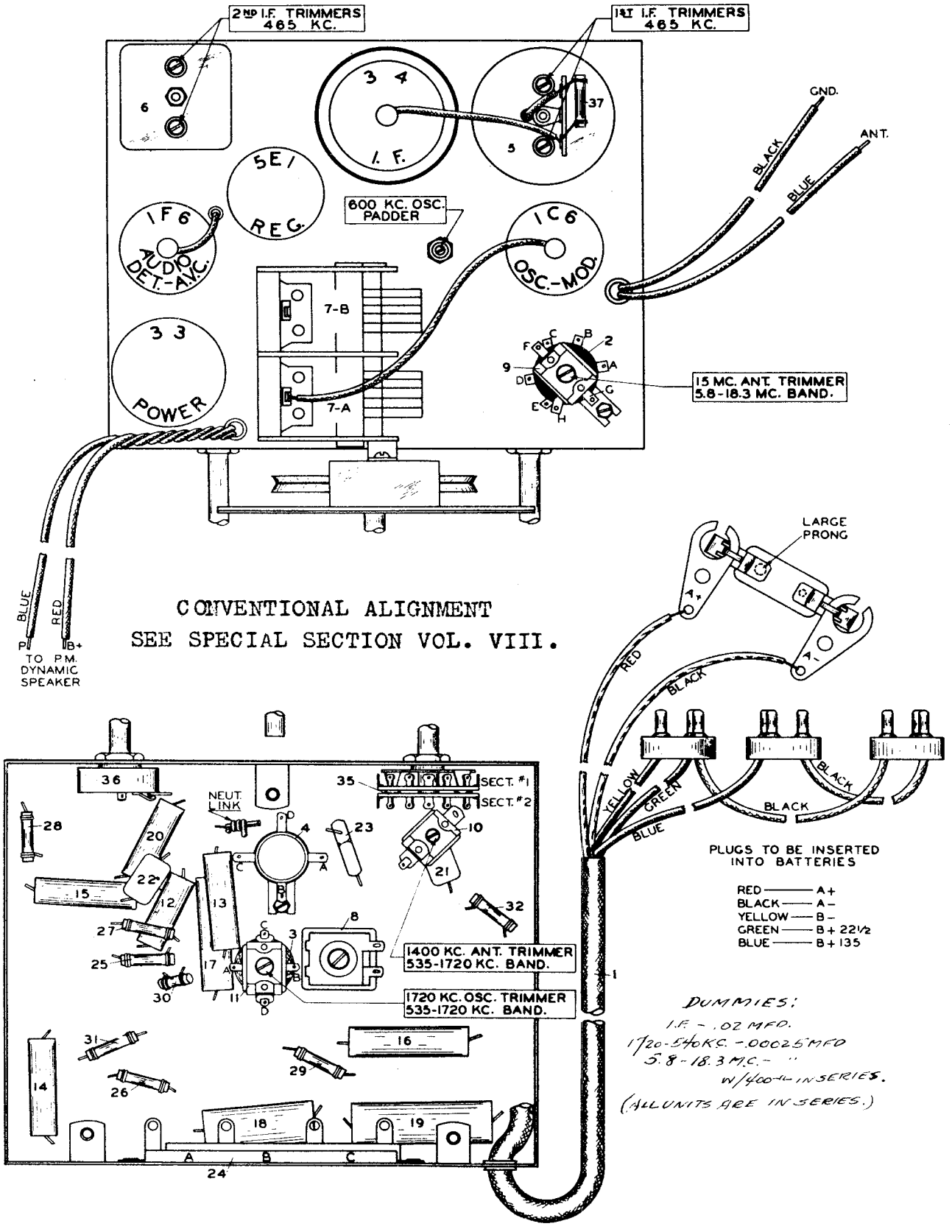

©John F. Rider, Publisher

SENTINEL RADIO CORP.

MODEL 93 L
Schematic, Parts
Socket. Voltage

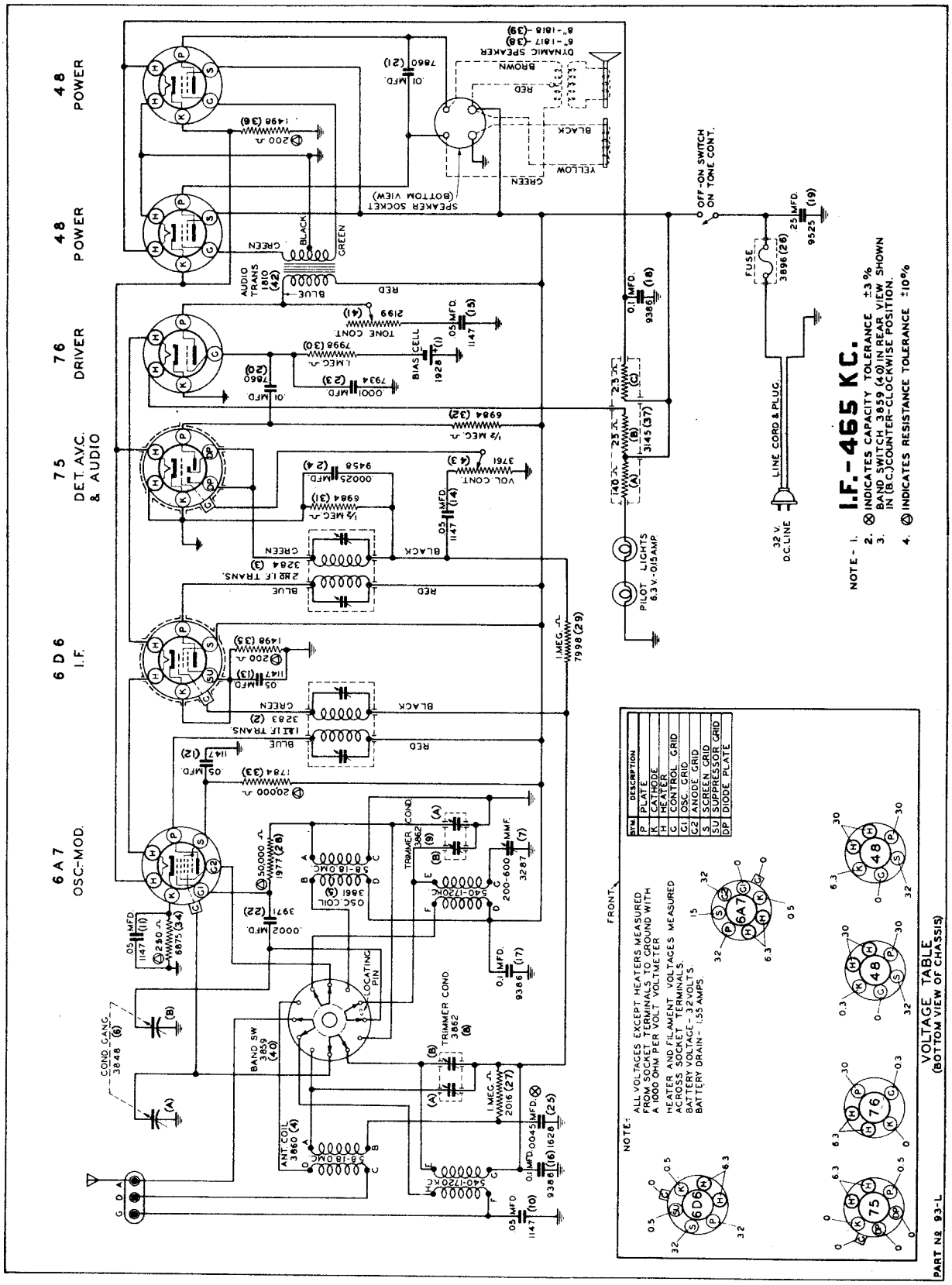

©John F. Rider, Publisher

©John F. Rider, Publisher

CONVENTIONAL ALIGNMENT SEE SPECIAL SECTION VOL. VIII.

ELIMINATION OF INTERFERENCE CAUSED BY A 32-VOLT LIGHT PLANT

General

Two kinds of static-like noise may be heard when you operate your 32 volt radio at the same time the generating plant is charging the plant batteries.

Static-like noise, due to the action of the brushes on the commutator, may reach the set through the supply lines. Such noise can generally be eliminated by the use of .5 Mfd. 200 volt condensers, as shown in Figs. 1 and 3.

Static-like noise, due to the operation of the high tension circuit may radiate through the air to the antenna of the set. Radiation has been found to extend a half mile in extreme cases. Proper placement of the antenna, along with the use of a spark plug suppressor and correct shielding will entirely eliminate this type of noise.

When eliminating these electrical disturbances always apply the remedies given in the order in which they appear.

Usual Installations

Install spark plug suppressor on the spark plug and connect the high tension lead to the suppressor, as shown in Figure 3.

For four cylinder plants use four spark plug supressors, one attached to each spark plug.

CAUTION: Disconnect batteries from generator before attaching suppressor equipment.

Connect one .5 Mfd. 200 volt condenser between one positive brush and the generator frame and one condenser between one negative brush and the generator frame as shown in Figure 1.

FOUR CYLINDER PLANTS. For four cylinder plants attach a condenser to the positive and negative brushes as shown in Figure 2.

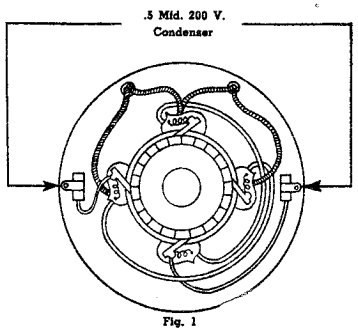

Fig. 1

Extreme Cases

To determine if the high tension wiring is radiating into the antenna disconnect the antenna and ground from the receiver and if the noise is eliminated or materially reduced, the noise is being picked up by the antenna. In such a case, obtain a piece of electrician's loom which will just slide over the high tension wire and a piece of copper braid shielding which will just slip over the loom. Cut a piece of loom just long enough to cover the high tension wire from the coil to the spark plug suppressor. Cut a piece of shielding that will be one inch shorter than the loom when the shielding is extended over the loom.

Ignition Noise on Battery Leads

Sometimes the ignition interference will travel up the battery leads. This condition can be corrected as follows: Attach a .5 Mfd. condenser between the POSITIVE terminal at the top of the control box and the frame of the box. (Be sure the frame of the box is well grounded to the generator frame.) Attach a .5 Mfd. condenser between the NEGATIVE terminal at the top of the control box and the control box frame.

Ignition Interference on Supply Leads

In extreme cases the ignition interference will travel up the supply leads to the radio receiver. This condition can be corrected by attaching a .5 Mfd. condenser between the ungrounded side of the line (in the main switch box) and ground (or the grounded side of the line if one side of the line is grounded).

Grounding

Some cases may require a thorough grounding of the system. This may be accomplished by running a No. 12 B. & S. gauge wire from the generator frame to a good ground. Conduit and metal switch boxes should also be grounded.

If it is necessary to ground one side of the supply lines, first ground them temporarily, one at a time through a 32 volt lamp. One side of the line will light the light, the other will not. The side which WILL NOT light the light should be grounded.

DO NOT apply any of the remedies listed under "Extreme Cases", before trying the ones listed under "Usual Cases".

Slip the loom over the high tension lead. Slip the shielding over the loom so that it is one-half inch from each end of the loom. Wrap some fine copper wire around the shielding near the end of the shielding to hold the shielding in place. Solder the wire to the shielding so it will not slip due to plant vibration. The shield may be taped in place if the tape is very adhesive. DO NOT USE FRICTION TAPE.

Solder a short braid pig-tail to the shielding and ground it under the nearest screw in the generator frame.

This receiver is designed for operation on 32 volt battery plants only and must not be used on battery plants of a HIGHER RATED VOLTAGE than 32 volts without a voltage regulator.

The power plug attached to the end of the power cord must be inserted correctly IN THE 32 VOLT POWER SUPPLY OUTLET OR RECEPTACLE, OTHERWISE THE SET WILL NOT OPERATE. If after inserting the plug and turning the receiver on, the set does not operate after approximately two minutes, remove this plug and turn it half-way around and reinsert it in the power receptacle.

A 4 AMPERE FUSE is located on the back of the chassis underneath receptacle marked "Fuse" and protects the receiver from damage should a defect occur in the set or if it is connected to the improper power supply. Continued burning out of fuses on the proper power supply is indicative of some defect. THE WARRANTY IS VOID IF THE RECEIVER IS OPERATED WITH THE FUSE SHORTED OUT OR WITH A FUSE LARGER THAN 4 AMPERES.

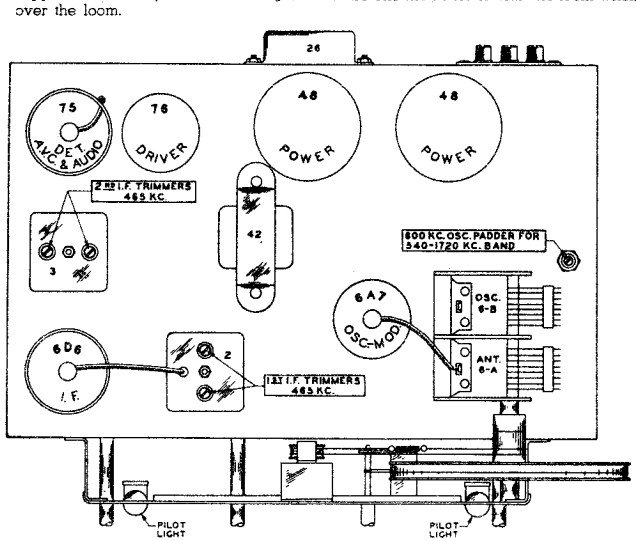

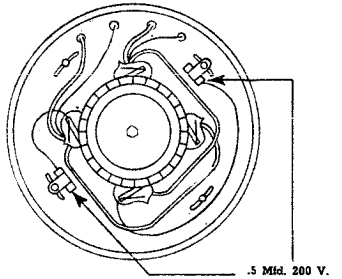

Fig. 2

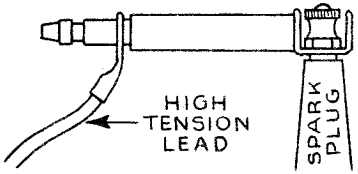

Fig. 3

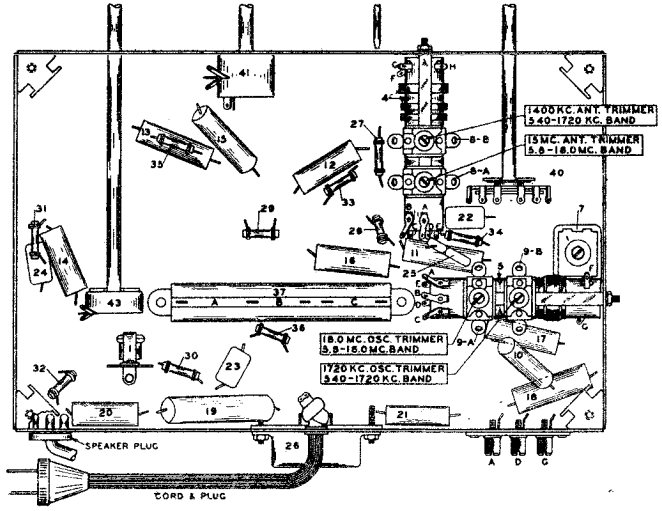

SENTINEL RADIO CORP.

MODEL 97 L
Schematic, Parts
Socket, Voltage

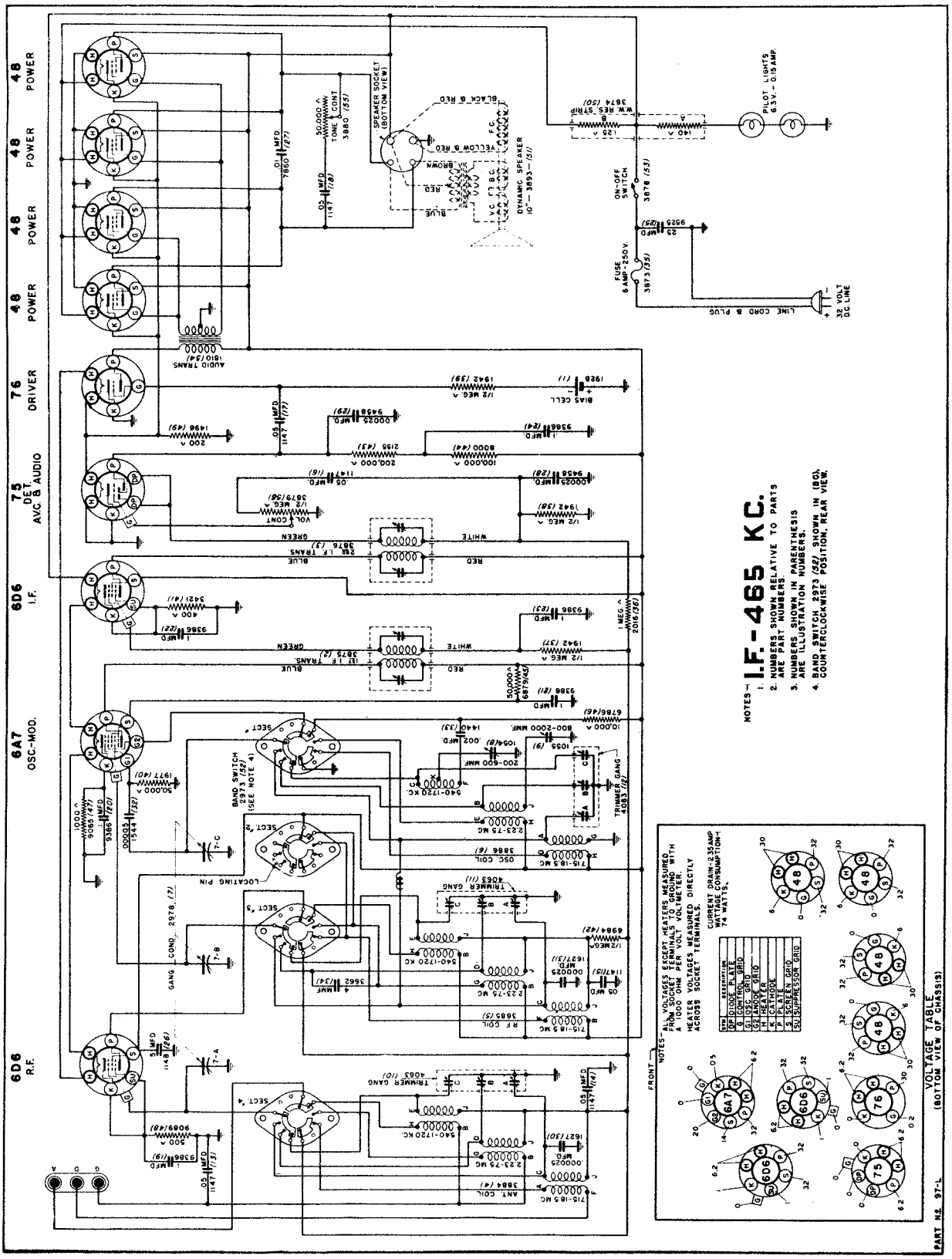

©John F. Rider, Publisher

MODEL 97 L
Socket, Trimmers
Chassis, Alignment

SENTINEL RADIO CORP.

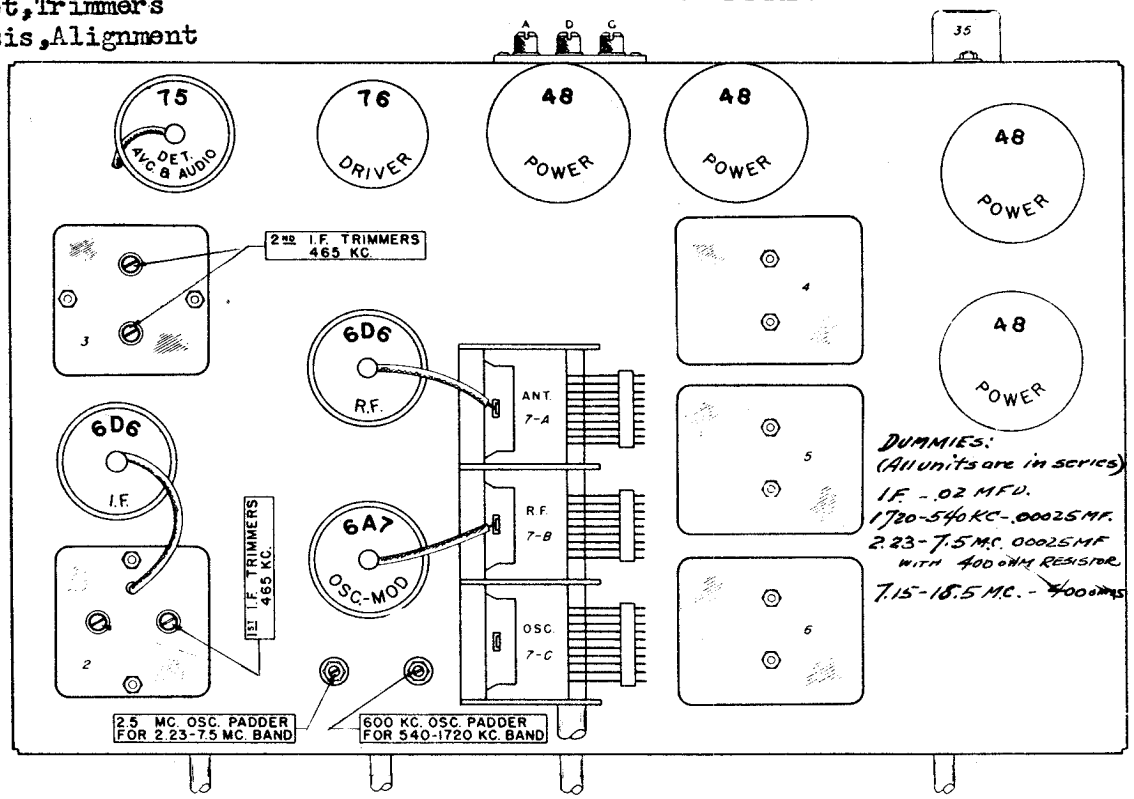

CONVENTIONAL ALIGNMENT SEE SPECIAL SECTION VOL. VIII.

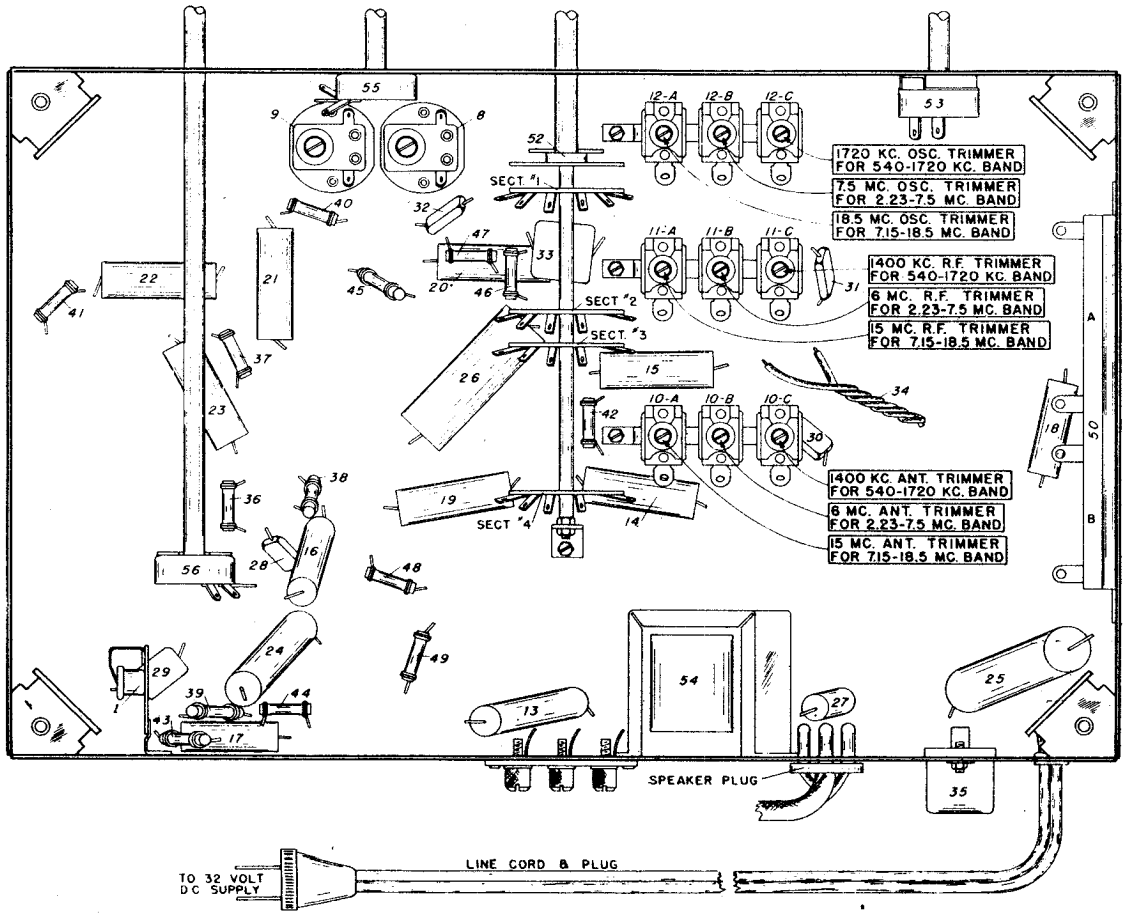

FOR ELIMINATION OF INTERFERENCE CAUSED BY A 32 VOLT PLANT SEE MODEL 93L.

©John F. Rider, Publisher

SENTINEL RADIO CORP.

MODEL 100 X
Schematic, Parts
Socket, Voltage

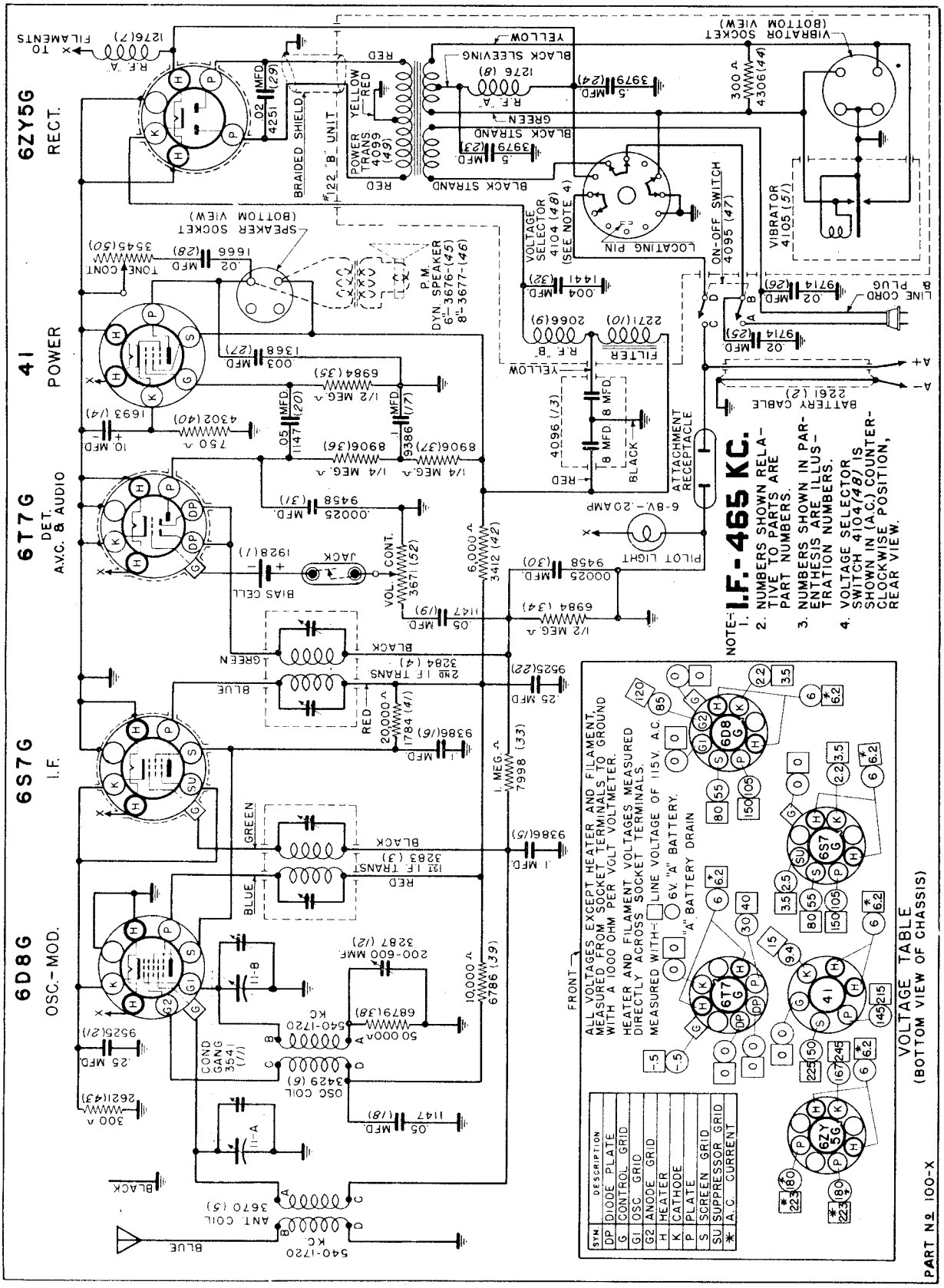

©John F. Rider, Publisher

MODEL 100 X
Socket, Trimmers
Chassis, Alignment

SENTINEL RADIO CORP.

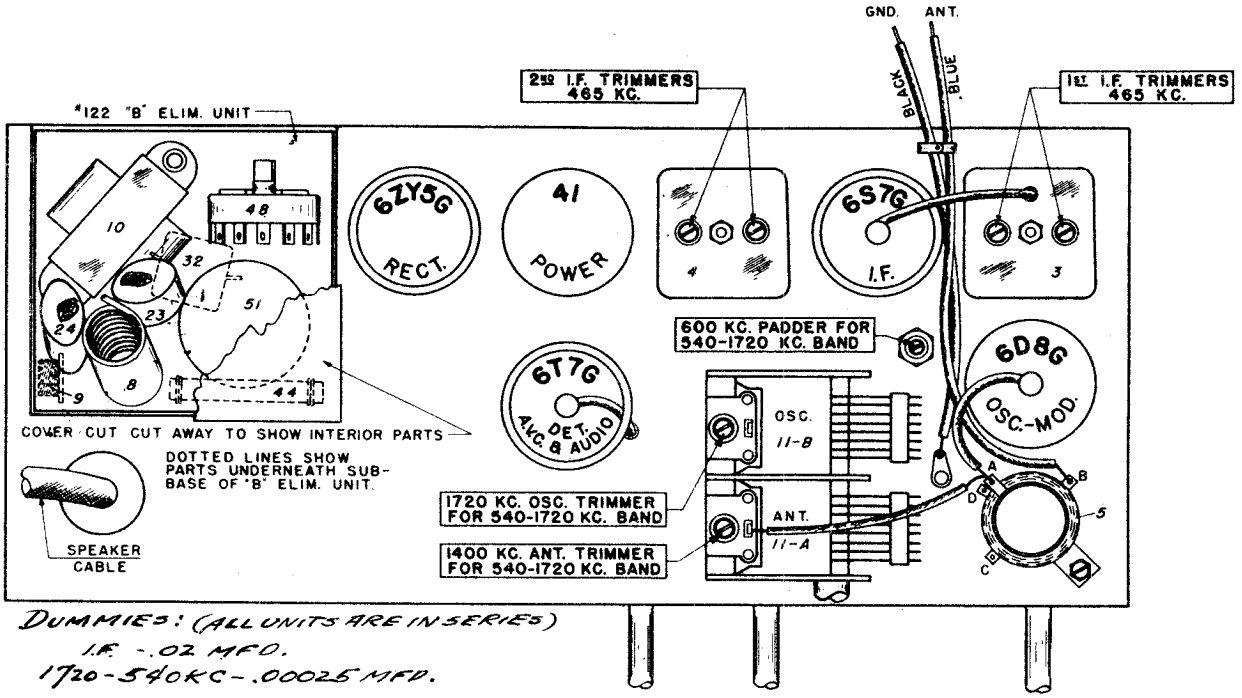

DUMMIES: (ALL UNITS ARE IN SERIES)
I.F. - .02 MFD.
1720-540KC - .00025 MFD.

CONVENTIONAL ALIGNMENT SEE SPECIAL SECTION VOL. VIII.

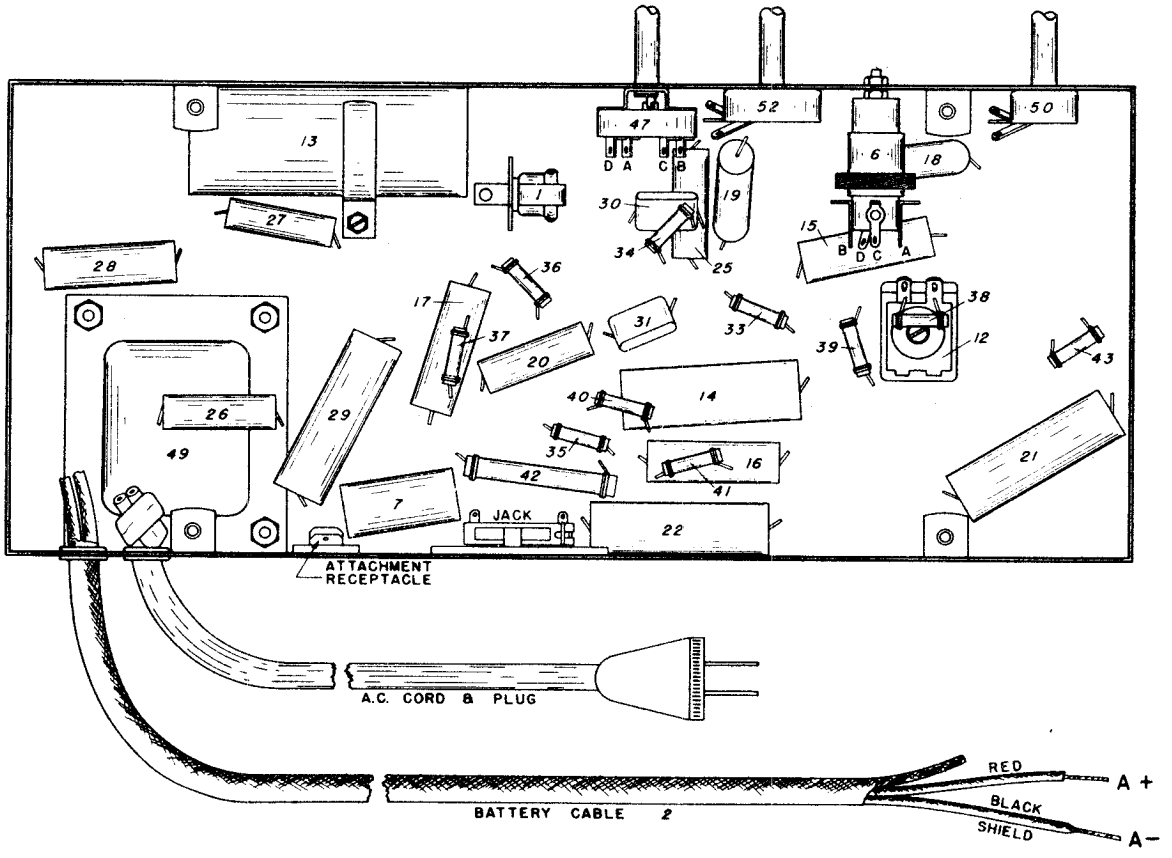

©John F. Rider, Publisher

SETCHELL CARLSON RADIO PRODUCTS

MODEL 332
MODEL 622
Schematics

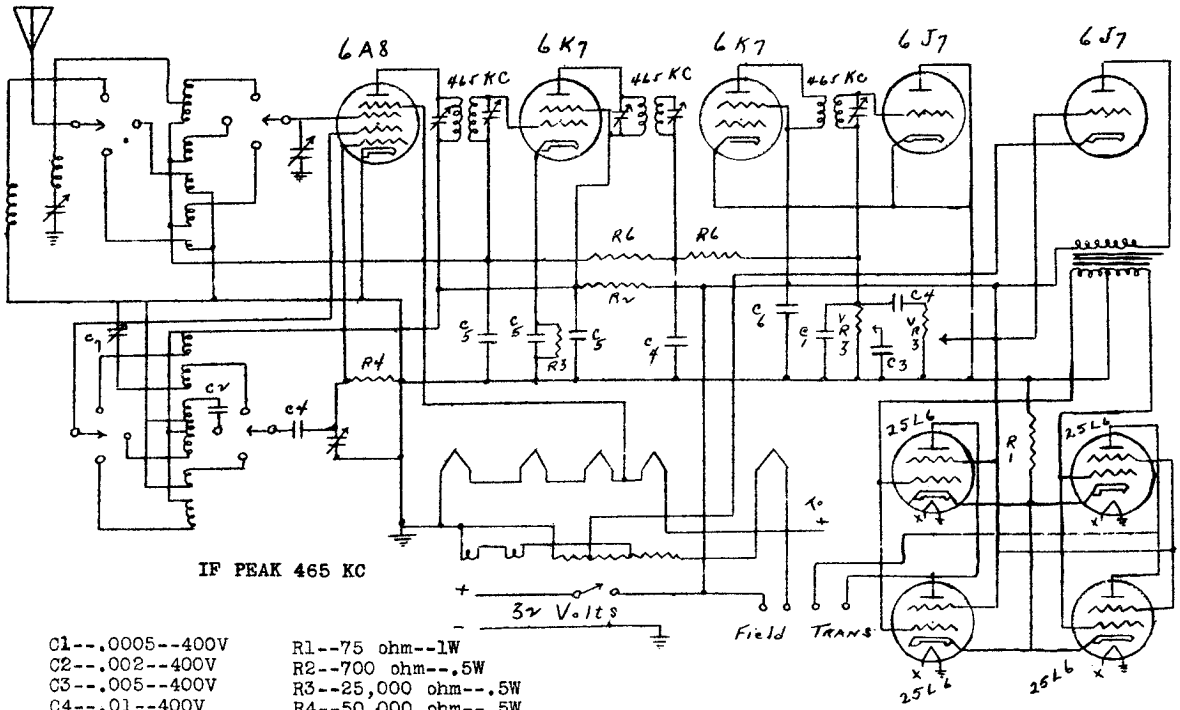

IF PEAK 465 KC

C1--.0005--400V
C2--.002--400V
C3--.005--400V
C4--.01--400V
C5--.1--400V
C6--.25--200V
C7--Adj. Padder

R1--75 ohm--1W
R2--700 ohm--.5W
R3--25,000 ohm--.5W
R4--50,000 ohm--.5W
R5--200,000 ohm--.5W
R6--500,000 ohm--.5W
VR3--.5 meg. pot.

MODEL 332 S. C. RADIO

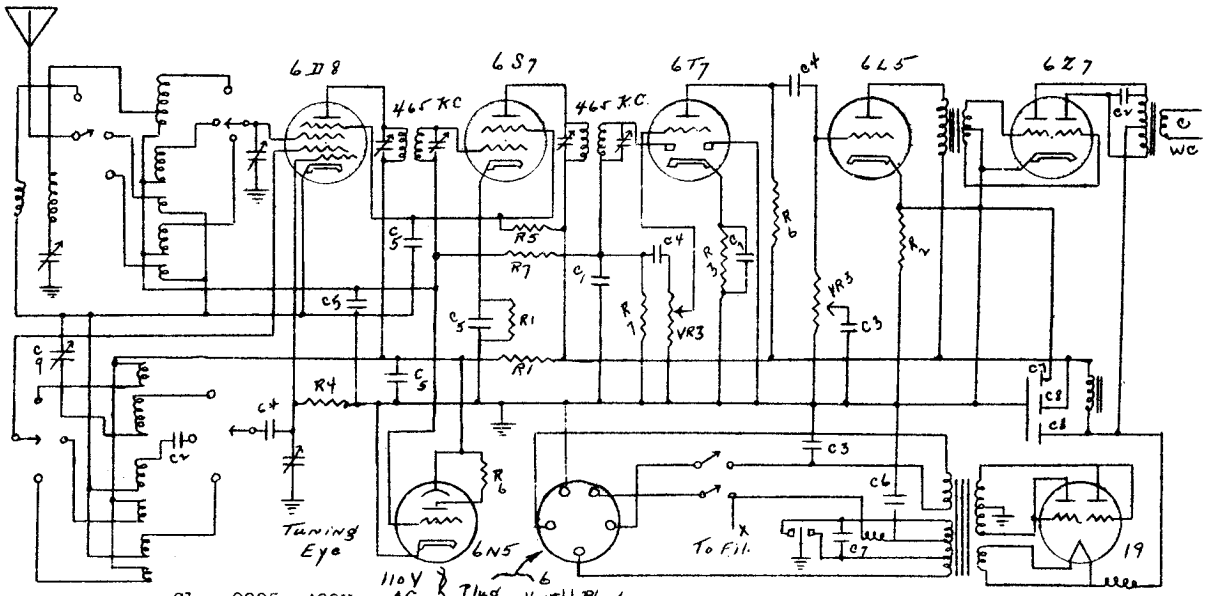

IF PEAK 465 KC

C1--.0005--400V
C2--.002--400V
C3--.005--400V
C4--.01--400V
C5--.1--400V
C6--.25--400V
C7--10--50V
C8--8--600V
C9--Adj. Padder

R1--700 ohm .5 W
R2--1200 "
R3--3000 "
R4--25,000 "
R5--50,000 "
R6--200,000 "
R7--500,000 "
VR3--.5 Meg. Pot.

MODEL 622 S C Radio

©John F. Rider, Publisher

MODEL 600
MODEL 602
MODEL 620
Schematics

SETCHELL CARLSON RADIO PRODUCTS

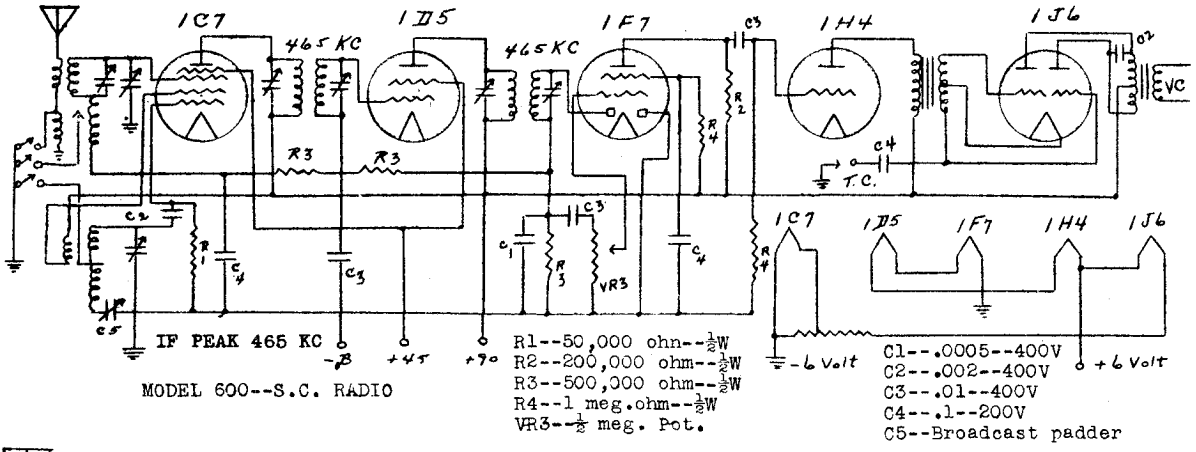

MODEL 600--S.C. RADIO

R1--50,000 ohn--½W
R2--200,000 ohm--½W
R3--500,000 ohm--½W
R4--1 meg.ohm--½W
VR3--½ meg. Pot.

C1--.0005--400V
C2--.002--400V
C3--.01--400V
C4--.1--200V
C5--Broadcast padder

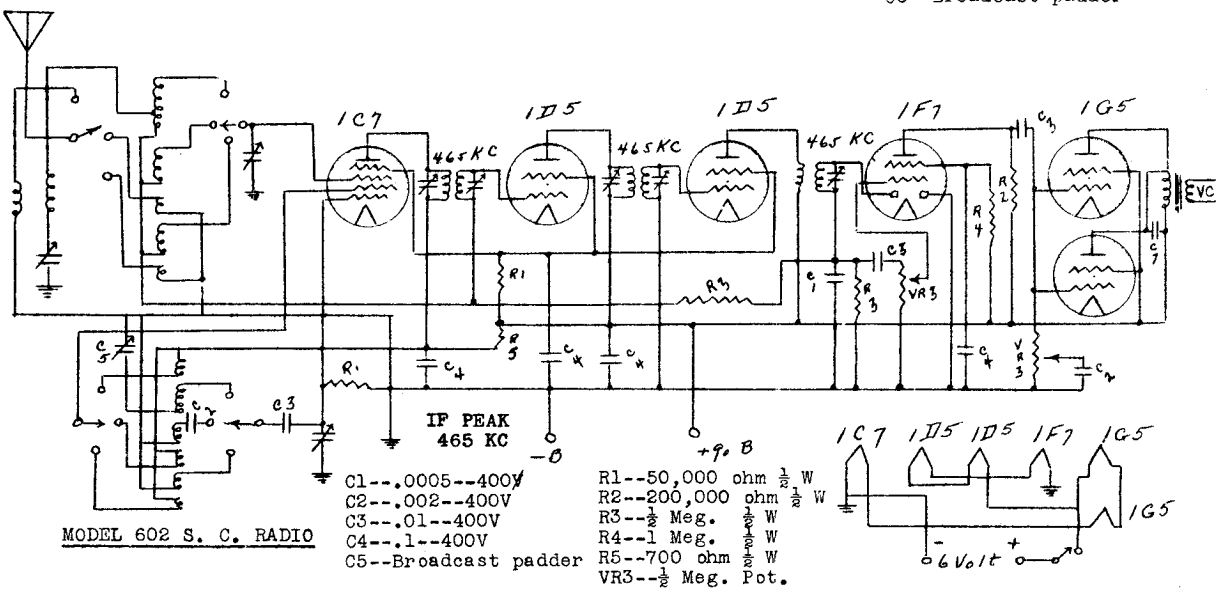

MODEL 602 S. C. RADIO

C1--.0005--400V
C2--.002--400V
C3--.01--400V
C4--.1--400V
C5--Broadcast padder

R1--50,000 ohm ½ W
R2--200,000 ohm ½ W
R3--½ Meg. ½ W
R4--1 Meg. ½ W
R5--700 ohm ½ W
VR3--½ Meg. Pot.

C1--.0005--400V
C2--.002--400V
C3--.005--400V
C4--.01--400V
C5--.1--400V
C6--.25--200V
C7--10--50V
C8--8--600V
C9--Adj. Padder Cond.

R1--700 ohm--½ W
R2--3000 "
R3--14,000 "
R4--25,000 "
R5--50,000 "
R6--200,000 "
R7--500,000 "
VR3--.5 Meg. Pot.

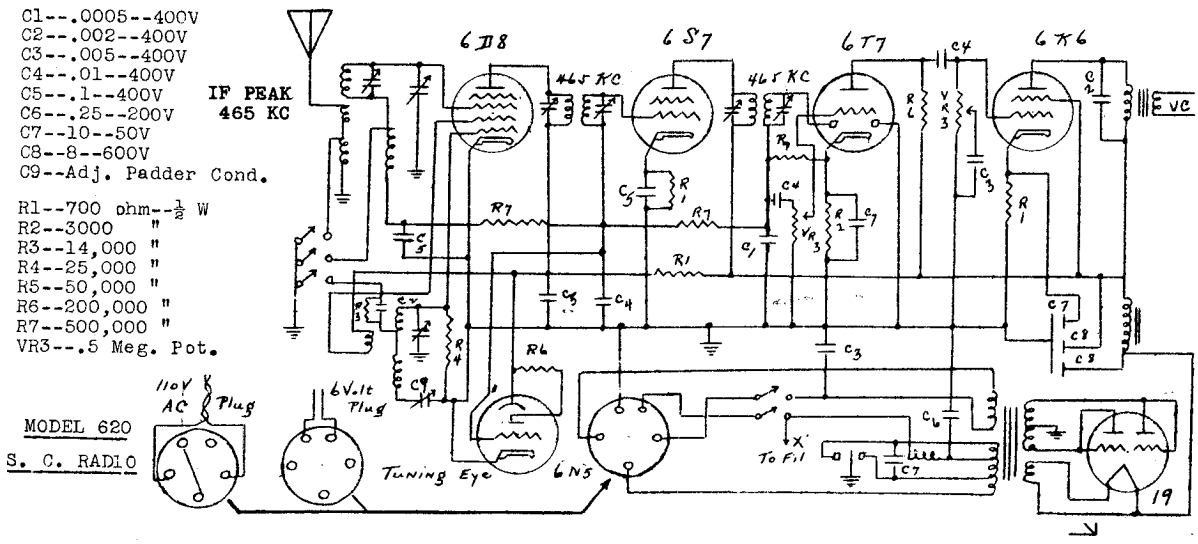

MODEL 620
S. C. RADIO

©John F. Rider, Publisher

SPARKS WITHINGTON CO.

MODEL 46P
Schematic, Parts
Voltage, Resistance
Trimmers, Alignment

Generator at 172.5 KC, connected to grid cap of 36, align IF trimmers to peak. Connect Generator to ANT and Gnd of receiver (Same frequency), align OSC trimmer to maximum peak. Reset generator to 2200 KC, align RF to maximum peak. After set has been installed, tune in a signal of approximately 2200 KC and peak the antenna trimmer for maximum response. Repeat adjustments for maximum performance.

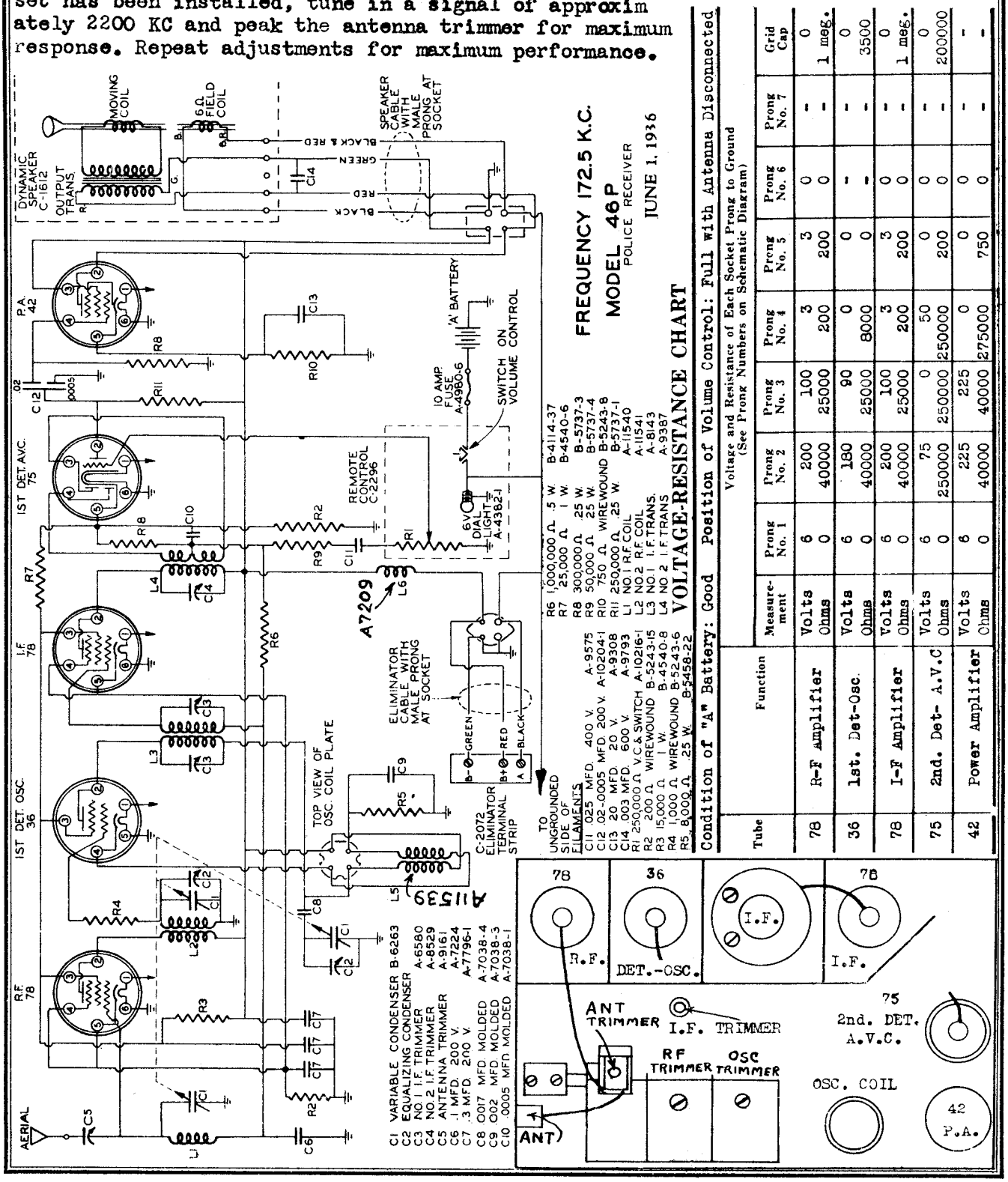

©John F. Rider, Publisher

MODELS 518,518X,558B,558BX,558C
558CX,568,568X,578(1938),578X SPARKS WITHINGTON CO.
Schematic,Parts,Voltage

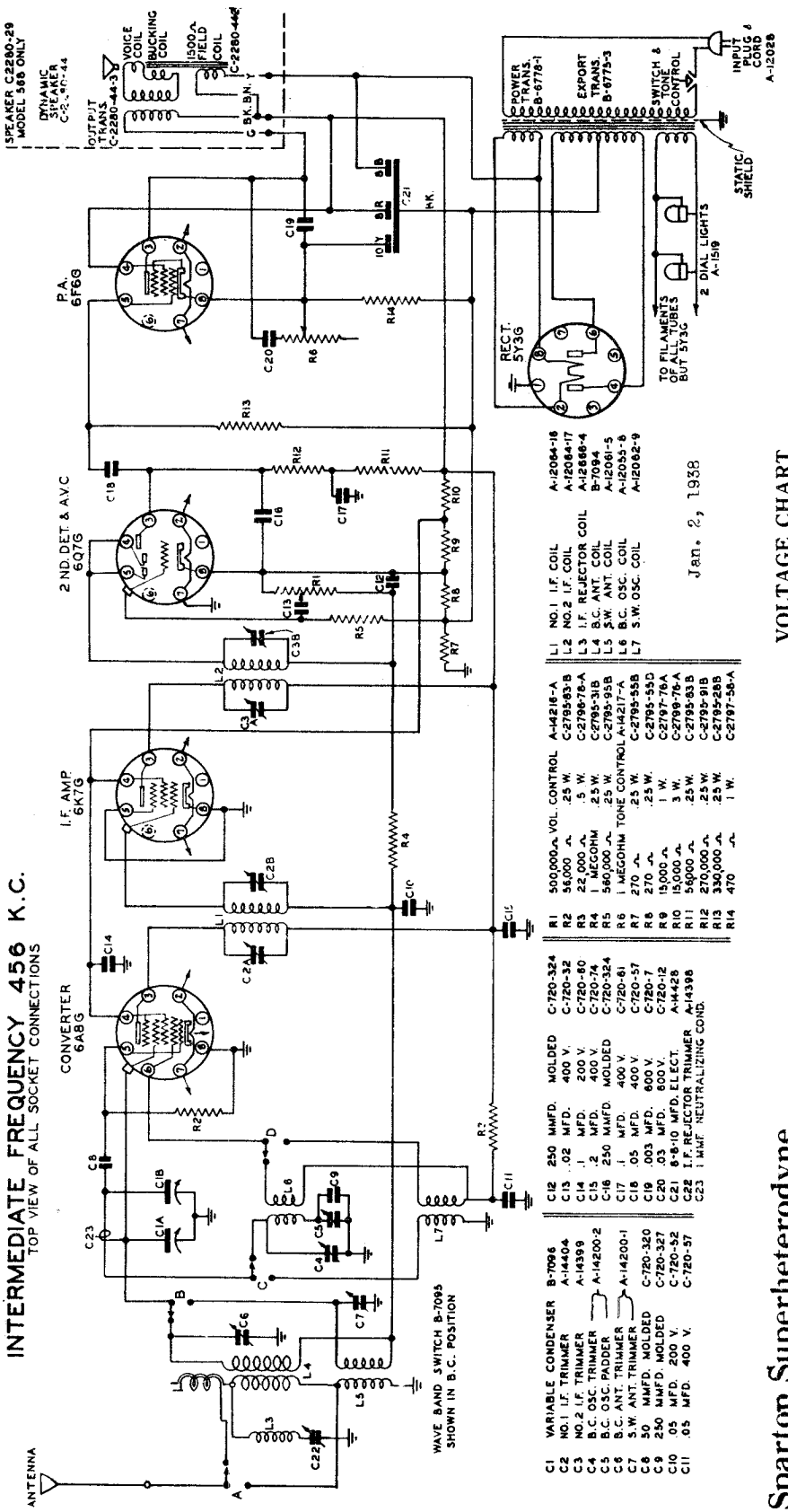

Sparton Superheterodyne

Models

518
518-X
558-B 558-C
558-BX 558-CX
568 578
568-X 578-X

VOLTAGE CHART

Line Voltage: 120 volts — Position of Volume Control: Full with Antenna Disconnected

Tube	Function	Voltage of Socket Prongs to Gnd.(See Prong Nos. on Schematic Diagram)							
		No. 1	No. 2	No. 3	No. 4	No. 5	No. 6	No. 7	No. 8	Grid Cap
6A8G	Converter	0	6.2	250	90	-4.5	152	0	0	-.25
6K7G	I.F. Amp.	0	6.2	250	90	250	0	0	0	-.25
6Q7G	2nd Det. - AVC	0	6.2	56	-2	-2	4	0	2.5	-2.2
6F6G	Power Amp.	0	6.2	235	250	.1	0	0	12	-
5Y3G	Rect.	0	340*	0	340*	0	340*	0	340*	-

Notes: Voltage readings are for schematic diagram. Allow 15% + or - on all measurements. Always use meter scale which will give greatest deflection within scale limits. All DC measurements made with 1000 ohms per volt voltmeter. All AC voltages made with rectifier type voltmeter. Unless designated otherwise, voltages in table are + DC voltages.
*AC volts.

©John F. Rider, Publisher

SPARKS WITHINGTON CO

MODELS 518,518X,558B,558BX,558C
558CX,568,568X,578(1938),578X
Alignment,Socket,Trimmers
MODELS 528-2,588-2
Socket,Trimmers,Alignment

ALIGNMENT (see note)

OPER-ATION	ALIGNMENT OF	GENERATOR CONNECTED TO	DUMMY ANTENNA	GENERATOR FREQUENCY	BAND SWITCH SETTING	TUNING COND. SETTING	TRIMMER	REMARKS
1	I.F.	Conv. Grid	.1 mf.	456	BC.	Open	C5 A,B	2nd I.F. Trans.
							C2 A,B	1st I.F. Trans.
2	Rejector	Ant.	200 mmf.	456	BC.	Closed	C22	Adjust to minimum
3	Broadcast Band	Ant.	200 mmf.	1500	BC.	1500	C4 Osc.	
							C6 Ant.	
4		Ant.	200 mmf.	600	BC.	600	C5 Pad	
5	(Repeat operation 3)							
6	(Check calibration and sensitivity at 1500 KC, 900 KC, 600KC)							
7	S.W. Band	Ant.	*	18 MC.	SW.	18 MC.	C7 Ant.	
8	(Check calibration and sensitivity at 18 MC. and 6 MC.)							
9	(Check operations 1 to 8 inclusive)							

* 100 ohm and 200 mmf. in series.

NOTE: Check to see that dial pointer is parallel to horizontal lines on dial when variable condenser rotor plates are fully meshed with stator plates.

ALIGNMENT (see note)

OPER* ATION	ALIGNMENT OF	GENERATOR CONNECTED TO	DUMMY ANTENNA	GENERATOR FREQUENCY	BAND SWITCH SETTING	TUNING COND. SETTING	TRIMMER	REMARKS
1	I.F.	Conv. Grid	.1 mf.	456	BC	Open	C26 A,B	3rd I.F. Trans.
							C25 A,B	2nd I.F. Trans.
2	Rejector	Ant.	150 mmf.	456	BC		C24 A,B	1st I.F. Trans.
							C7	Adjust to minimum
3	Broadcast Band	Ant.	150 mmf.	1500	BC	1500	C4 Osc.	
							C2 Ant.	
4		Ant.	150 mmf.	600	BC	600	C5 Pad	
5	(Repeat operation 3)							
6	(Check calibration and sensitivity at 1500 KC, 900 KC and 600 KC)							
7	S.W. Band	Ant.	400 ohm	15 MC.	SW	15 MC.	C3 Ant.	
8	(Check operations 1 to 7 inclusive)							

NOTE: Check to see that dial pointer points to last calibrated mark on right hand side of dial when variable condenser rotor plates are fully meshed with stator plates.

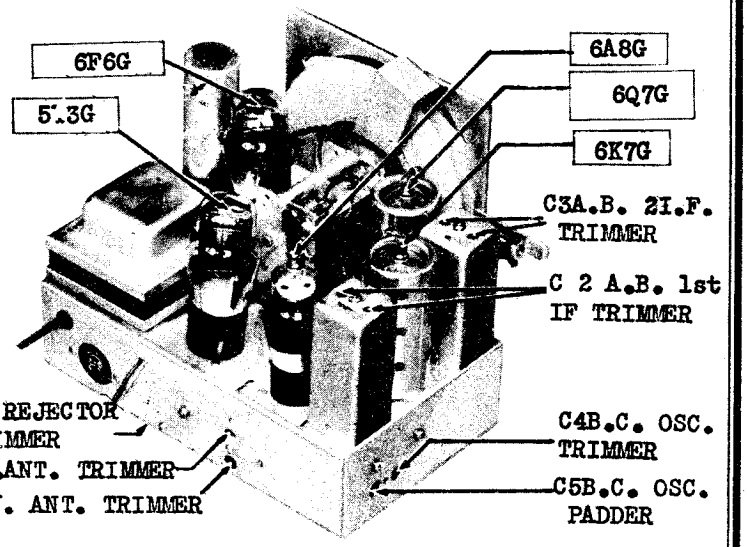

MODEL 528-2 & 588-2

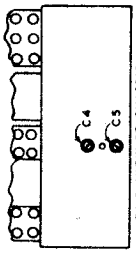

TRIMMER LOCATIONS

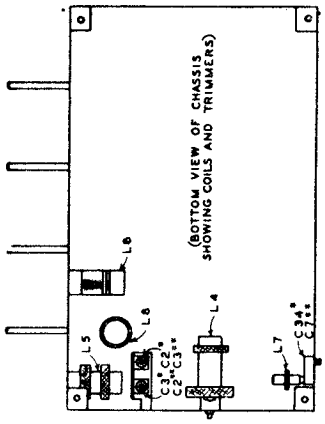

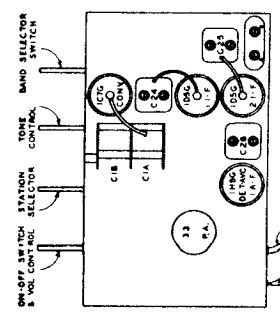

©John F. Rider, Publisher

©John F. Rider, Publisher

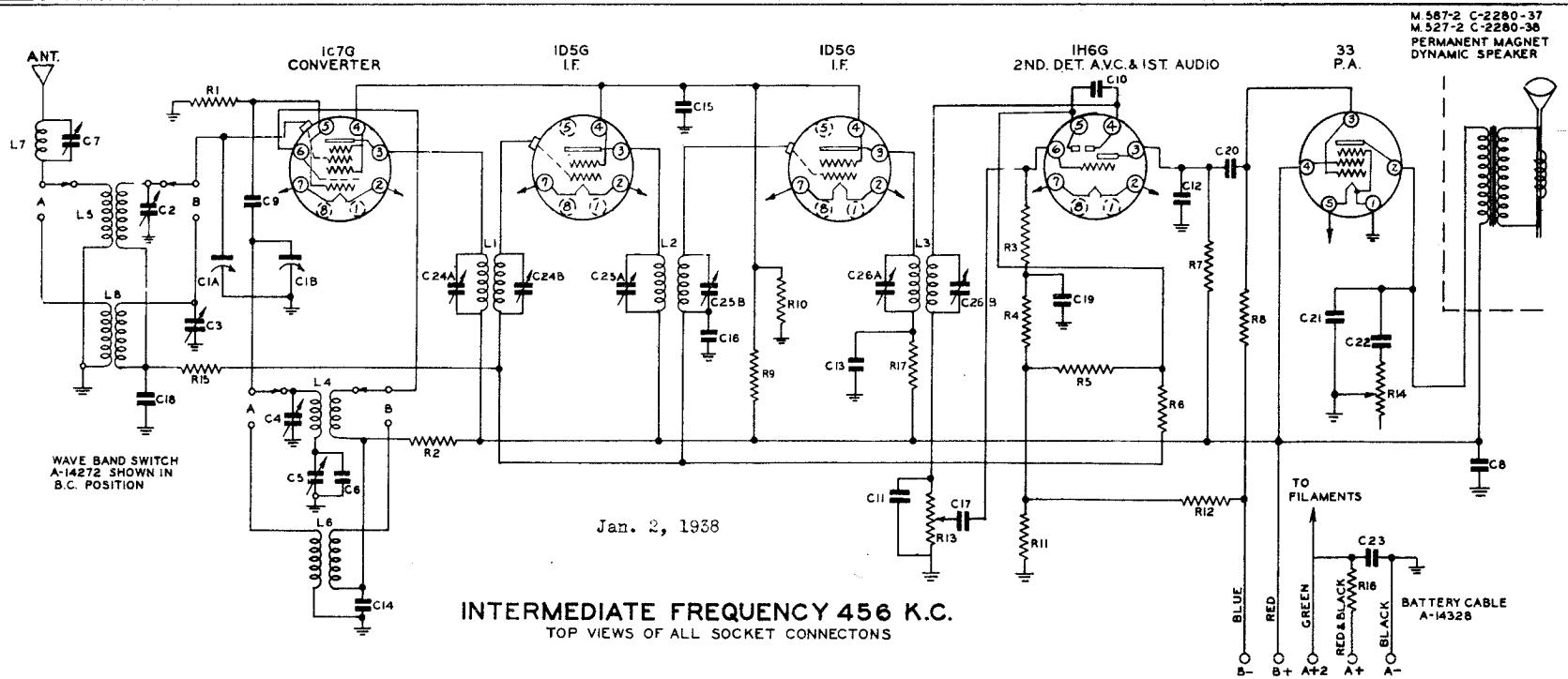

INTERMEDIATE FREQUENCY 456 K.C.

TOP VIEWS OF ALL SOCKET CONNECTONS

C1A&B VARIABLE CONDENSER	B-6776	C14 .1 MFD. 200 V.	C-720-60	R1 47,000 Ω .25 W.	C-2795-82B	R10 56,000 Ω 1 W.	C-2797-83A	L1 NO.1 I.F. COIL	A-12064-14
C2 B.C. ANT. TRIMMER	A-12334	C15 .5 MFD. 200 V.	C-720-104	R2 10,000 Ω .5 W.	C-2796-74A	R11 150 Ω .5 W.	C-2796-52A	L2 NO.2 I.F. COIL	A-12064-14
C3 S.W. ANT. TRIMMER		C16 .05 MFD. 100 V.	C-720-58	R3 470,000 Ω .25 W.	C-2795-94B	R12 390 Ω .5 W.	C-2796-57A	L3 NO.3 I.F. COIL	A-12064-15
C4 B.C. OSC. TRIMMER	A-14388	C17 .05 MFD. 100 V.	C-720-58	R4 220,000 Ω .25 W.	C-2795-90B	R13 500,000 Ω VOL. CONTROL & SWITCH	A-14274-A	L4 B.C. OSC. COIL	A-12055-7
C5 B.C. OSC. PADDER		C18 .1 MFD. 100 V.	C-720-62	R5 470,000 Ω .25 W.	C-2795-94B	R14 1 MEGOHM TONE CONTROL	A-12987-A	L5 B.C. R.F. COIL	A-12056-4
C6 .00025 MFD. MOLDED	C-720-324	C19 .1 MFD. 100 V.	C-720-62	R6 1 MEGOHM .25 W.	C-2795-98B	R15 5600 Ω .25 W.	C-2795-71B	L6 S.W. OSC. COIL	A-12062-11
C7 I.F. REJECTOR TRIMMER	A-12834-1	C20 .05 MFD. 200 V.	C-720-52	R7 220,000 Ω .25 W.	C-2795-90B	R16 .5 OHMS WIREWOUND	B-5243-43	L7 I.F. REJECTOR COIL	A-12866-3
C8 8 MFD. 200 V. ELECT.	A-14273	C21 .001 MFD. 400 V.	C-720-136	R8 470,000 Ω .25 W.	C-2795-94B	R17 4700 Ω .25 W.	C-2795-70B	L8 S.W. R.F. COIL	A-12061-5
C9 .00005 MFD. MOLDED	C-720-315	C22 .03 MFD. 600 V.	C-720-43	R9 15,000 Ω 1 W.	C-2797-76A				
C10 .0001 MFD. MOLDED	C-720-325	C23 1 MFD 100 V.	C-720-102						
C11 .00025 MFD. MOLDED	C-720-324	C24 NO. 1 I.F. TRIMMER	A-14375						
C12 .00025 MFD. MOLDED	C-720-327	C25 NO.2 I.F. TRIMMER	A-14375						
C13 .5 MFD. 200 V.	C-720-104	C26 NO.3 I.F. TRIMMER	A-14375						

VOLTAGE CHART

BATTERY

Sparton Superheterodyne

Models

528-2 588-2

Batteries in Good Condition — Position of Volume Control: Full with Antenna Disconnected

Tube	Function	Voltage of Socket Prongs to Gnd. (See Prong Nos. on Schematic Diagram)								
		No. 1	No. 2	No. 3	No. 4	No. 5	No. 6	No. 7	No. 8	Grid Cap
1C7G	Converter	-	0	115	55	7	78	2	-	-.2
1D5G	1st I.F. Amp.	-	0	115	55	-	-	2	-	0
1D5G	2nd I.F. Amp.	-	0	110	55	-	-	2	-	0
1H6G	Det. AVC	-	0	22	0	2.5	0	2	-	-
33	Power Amp.	2	110	.5	115	0	-	-	-	-

Notes: Voltage readings are for schematic diagram. Allow 15% + or - on all measurements. Always use meter scale which will give greatest deflection within scale limits. All DC measurements made with 1000 ohms per volt voltmeter.
Unless designated otherwise, voltages in table are + DC voltages.

©John F. Rider, Publisher

INTERMEDIATE FREQUENCY 456 K.C.

TOP VIEWS OF ALL SOCKET CONNECTIONS

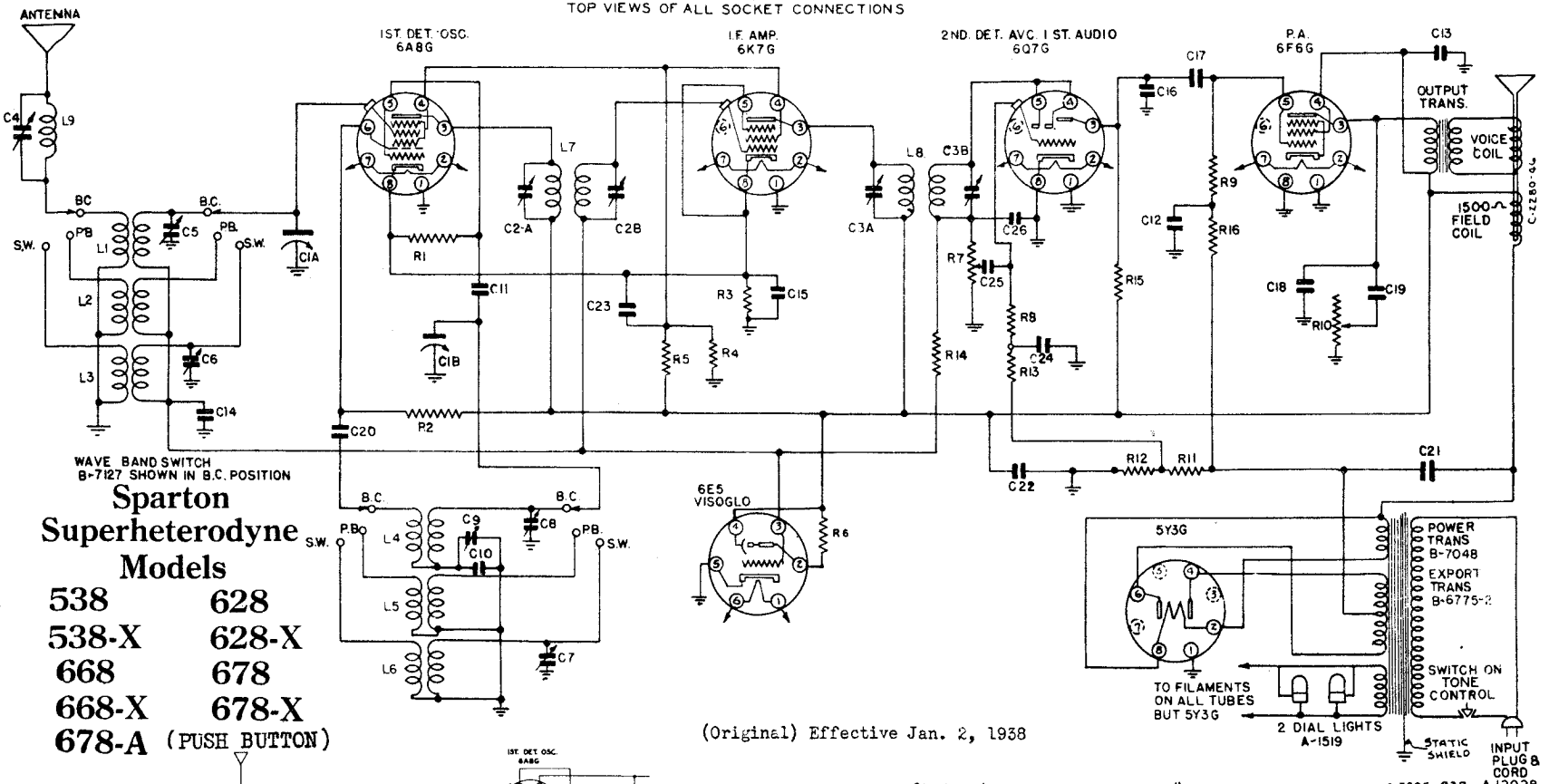

Sparton Superheterodyne Models

538	628
538-X	628-X
668	678
668-X	678-X
678-A (PUSH BUTTON)	

(Original) Effective Jan. 2, 1938

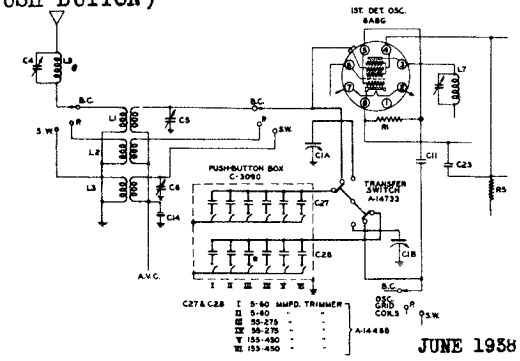

JUNE 1938

DIAGRAM OF CONNECTIONS FOR MODEL 678-A PUSH BUTTON BOX AND TRANSFER SWITCH. REFER TO SCHEMATIC ABOVE.

FOR TUNER DATA SEE INDEX

C1-A C1-B	VARIABLE COND.	B-7108
C2	#1 I.F. TRIMMER	A-14404
C3	#2 I.F. TRIMMER	A-14399
C4	I.F. REJECTOR TRIM	A-12834-1
C5	B.C. ANT. TRIMMER	A-14199
C6	S.W. ANT. TRIMMER	
C7	S.W. OSC. TRIMMER	
C8	B.C. OSC. TRIMMER	A-14388
C9	B.C. OSC. PADDER	
C10	200 MMFD. MOLDED	C-720-350
C11	.00005 MFD.	C-720-320
C12	.1 MFD. 200 V.	C-720-60
C13	.1 MFD. 400 V.	C-720-61
C14	.05 MFD. 100 V.	C-720-58
C15	.1 MFD. 200 V.	C-720-60
C16	250 MMFD. MOLDED	C-720-319
C17	.05 MFD. 400 V.	C-720-46
C18	.006 MFD. 600 V.	C-720-15
C19	.03 MFD. 600 V.	C-720-12
C20	.001 MFD. 400 V.	C-720-136
C21	16 MFD. ELECT.	A-14073
C22	30 MFD. ELECT.	A-14072
C23	.1 MFD. 200 V.	C-720-60
C24	.1 MFD. 200 V.	C-720-60
C25	.05 MFD. 200 V.	C-720-54
C26	250 MMFD. MOLDED	C-720-319

R1	56000 Ω .25 W.	C-2795-838
R2	22000 Ω .5 W.	C-2796-78A
R3	160 Ω .25 W.	C-2795-1408
R4	27000 Ω 1 W.	C-2797-79A
R5	15000 Ω 2 W.	C-2798-76A
R6	1 MEGOHM .25 W. (628 ONLY)	C-2795-968
R7	.5 MEG VOLUME CONTROL	A-14216-A
R8	560,000 Ω .25 W.	C-2795-958
R9	270,000 Ω .25 W.	C-2795-918
R10	1 MEG. TONE CONTROL	A-14211-A
R11	220 Ω 2 W.	C-2798-54A
R12	27 Ω .25 W.	C-2795-438
R13	1 MEGOHM .25 W.	C-2795-988
R14	1 MEGOHM .25 W.	C-2795-968
R15	270,000 .25 W.	C-2795-918
R16	270,000 .25 W.	C-2795-918

L1	B.C. ANT. COIL	A-14478
L3	S.W. ANT. COIL	
L2	P.B. ANT. COIL	A-12061-8
L4	B.C. OSC. COIL	A-14483
L6	S.W. OSC. COIL	
L5	P.B. OSC. COIL	A-12057-3
L7	#1 I.F. COIL	A-12064-15
L8	#2 I.F. COIL	A-12064-17
L9	I.F. REJECTOR COIL	A-12666-3

MODELS 538,538X,628,628X,668
668X,678,678X,678A
Voltage,Alignment,Socket
Trimmers

SPARKS WITHINGTON CO.

MODELS 538-538X, 628-628X, 668-668X, 678-678X, and 678A (push button)

VOLTAGE CHART

Line Voltage: 115 volts — Position of Volume Control: Full with Antenna Disconnected

Tube	Function	Voltage of Socket Prongs to Gnd. (See Prong Nos. on Schematic Diagram)								
		No. 1*	No. 2	No. 3	No. 4	No. 5	No. 6	No. 7*	No. 8	Grid Cap
6A8G	Converter	0	0	245	110	-5	155	6.2	3.2	0
6K7G	I.F. Amp.	0	0	245	110	3.2	-	6.2	3.2	0
6Q7G	2nd Det. AVC-1st Audio	0	0	105	-.1	-.1	-.1	6.2	0	-.1
6F6G	P.A.	0	0	225	235	.1	.3	6.2	0	-
5Y3G	Rect.	0	335*	-	335*	-	335*	-	335*	-
6E5	Viso-Glo	6.3	30	-.1	245	0	0	-	-	-

Voltage readings are for schematic diagram. Allow 15% + or - on all measurements. Always use meter scale which will give greatest deflection within scale limits. All DC measurements made with 1000 ohms per volt voltmeter. All AC voltages made with rectifier type voltmeter. Unless designated otherwise, voltages in table are + DC voltages.
*AC volts.

ALIGNMENT (see note)

OPERATION	ALIGNMENT OF	GENERATOR CONNECTED TO	DUMMY ANTENNA	GENERATOR FREQUENCY	BAND SWITCH SETTING	TUNING COND. SETTING	TRIMMER	REMARKS
1	I.F.	Conv. Grid	.1 mf.	456	BC	Open	C2A C2B	1st I.F.
							C3A C3B	2nd I.F.
2	Rejector	Ant.	200 mmf.	456	BC	Closed	C4	Adjust to minimum
3	Broadcast Band	Ant.	200 mmf.	1500	BC	1500	C8 Osc.	
							C5 Ant.	
4		Ant.	200 mmf.	600	BC	600	C9 Pad	
5	(Repeat operation 3)							
6	(Check calibration and sensitivity at 1500 KC, 900 KC, 600 KC)							
7	Short-Wave Band	Ant.	*	15 MC.	SW.	15 MC.	C7 Osc.	Rock dial slightly while adjusting
							C6 Ant.	
8	(Check calibration and sensitivity at 15 MC. and 6 MC.)							
9	Police Band	Ant.	*		Police	(Check at 6 MC. and 1.95 MC.) No Trimmers		
10	(Check operations 1 to 9 inclusive)							

*100 ohm and 200 mmf. in series

NOTE: Check to see that dial pointer points to last calibrated mark on right hand side of dial when variable condenser rotor plates are fully meshed with stator plates.

CHASSIS ILLUSTRATION

(PUSH-BUTTON BOX NOT SHOWN)

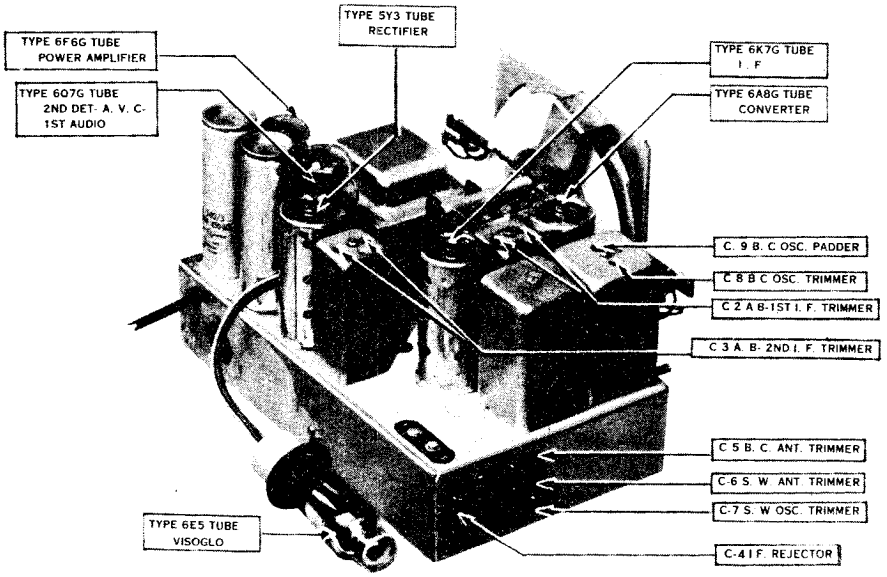

©John F. Rider, Publisher

SPARKS WITHINGTON CO.

SPARTON SUPERHETERODYNE MODELS 548X
INTERMEDIATE FREQUENCY 345 K.C.
TOP VIEWS OF ALL SOCKET CONNECTIONS

MODEL 548X
Schematic
Parts

(Original) Effective Jan. 2, 1938

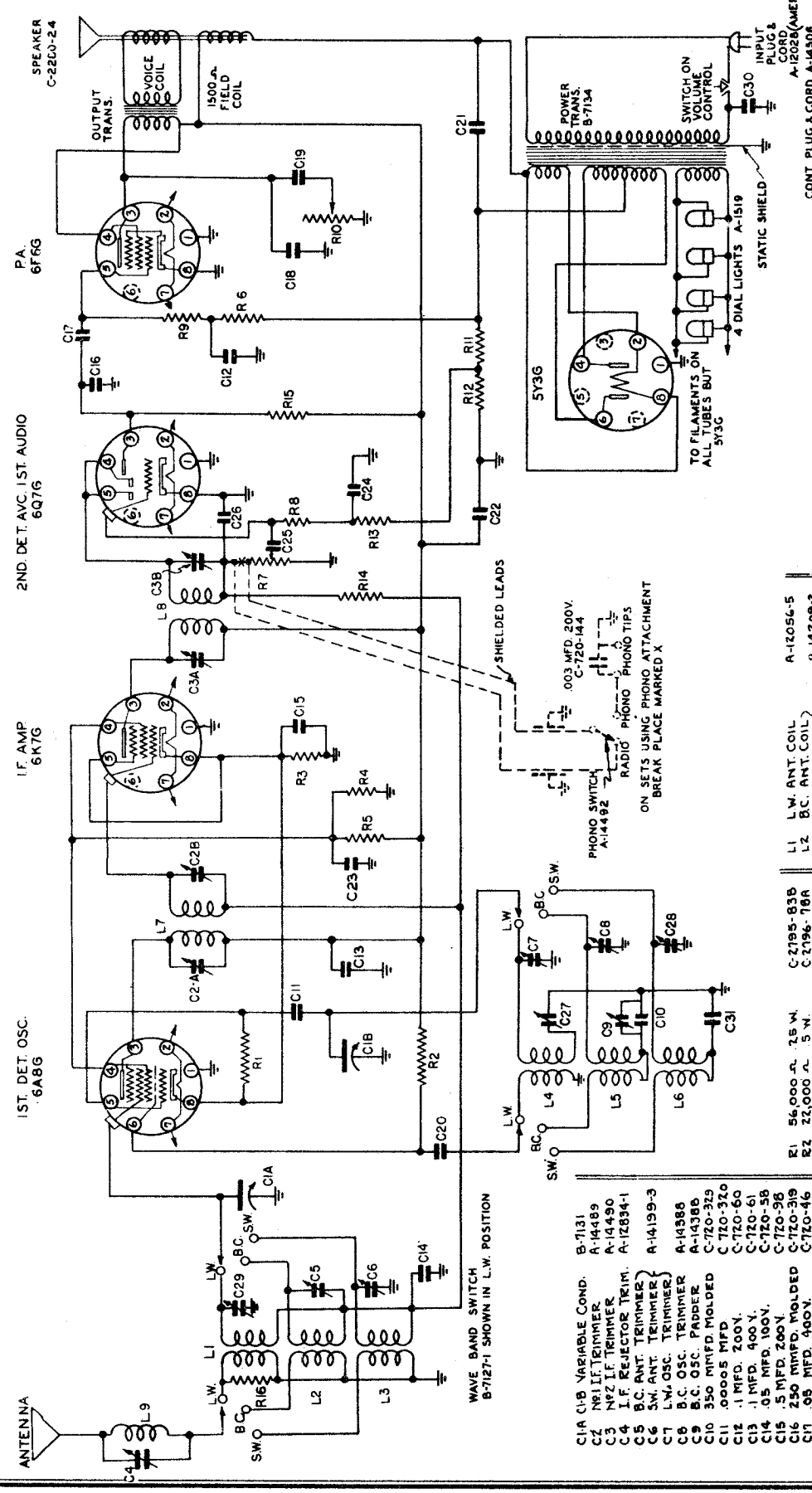

L1	L.W. Ant. Coil	A-12056-5
L2	B.C. Ant. Coil	
L3	S.W. Ant. Coil	A-14209-2
L4	L.W. Osc. Coil	A-12294-4
L5	B.C. Osc. Coil	
L6	S.W. Osc. Coil	A-14213-1
L7	No 1 I.F. Coil	A-12064-20
L8	No 2 I.F. Coil	A-12064-21
L9	I.F. Rejector Coil	A-12666-3

R1	56,000 Ω .25 W.	C-2195-83B
R2	22,000 Ω .5 W.	C-2196-78A
R3	160 Ω .25 W.	C-2195-140B
R4	12,000 Ω 1W.	C-2197-75A
R5	15,000 Ω 2W.	C-2198-76A
R6	270,000 Ω .25 W.	C-2195-91B
R7	.5 MEG. Volume Control	A-14216-A-1
R8	560,000 Ω .25 W.	C-2195-95B
R9	270,000 Ω .25 W.	C-2195-91B
R10	1 MEG. Tone Control	A-14211-A-1
R11	220 Ω 2 W.	C-2198-54A
R12	21 Ω .25 W.	C-2195-43B
R13	1 MEGOHM .25 W.	C-2195-98B
R14	1 MEGOHM .25 W.	C-2195-98B
R15	270,000 .25 W.	C-2195-91B
R16	10,000 Ω .25 W.	C-2195-74B

C1A C1B	Variable Cond.	B-7131
C2	No 1 I.F. Trimmer	A-14489
C3	No 2 I.F. Trimmer	A-14490
C4	I.F. Rejector Trim.	A-12834-1
C5	B.C. Ant. Trimmer	A-14199-3
C6	S.W. Ant. Trimmer	
C7	L.W. Osc. Trimmer	A-14388
C8	B.C. Osc. Trimmer	A-14388
C9	B.C. Osc. Padder	C-720-329
C10	350 MMFD. Molded	C-720-320
C11	.00005 MFD.	C-720-60
C12	.1 MFD. 200V.	C-720-61
C13	.1 MFD. 400 V.	C-720-58
C14	.05 MFD. 100V.	C-720-98
C15	.5 MFD. 200V.	C-720-319
C16	250 MMFD. Molded	C-720-46
C17	.05 MFD. 400V.	C-720-15
C18	.006 MFD. 600V.	C-720-12
C19	.03 MFD. 600V.	C-720-136
C20	.001 MFD. 400V.	A-14073
C21	16 MFD. Elect.	A-14072
C22	30 MFD. Elect.	C-720-60
C23	.1 MFD. 200V.	C-720-54
C24	.1 MFD. 200 V.	C-720-319
C25	.05 MFD. 200V.	
C26	250 MMFD. Molded	
C27	L.W. Osc. Padder	A-14199-2
C28	S.W. Osc. Trimmer	
C29	L.W. Ant. Trimmer	C-720-17
C30	.006 MFD. 600 V.	C-720-351
C31	.004 MFD. Molded	

©John F. Rider, Publisher

MODEL 548X
Voltage, Alignment
Socket, Trimmers

SPARKS WITHINGTON CO.

VOLTAGE CHART

Line Voltage: 112 volts — Position of Volume Control: Full with Antenna Disconnected
Power Transformer on 95-115 V. tap

Tube	Function	Voltage of Socket Prongs to Gnd. (See Prong Nos. on Schematic Diagram)								
		No. 1*	No. 2	No. 3	No. 4	No. 5	No. 6	No. 7*	No. 8	Grid Cap
6A8G	Converter	0	0	270	95	-10	160	6.3	3	0
6K7G	I.F.	0	0	270	95	3	-	6.3	3	0
6Q7G	2nd Det.-AVC-1st Audio	0	0	100	-.1	-.1	-.1	6.3	0	-.1
6F6G	P.A.	0	0	254	272	1	2	6.3	0	-
5Y3G	Rect.	0	320*	-	380*	-	380*	-	320*	-

Voltage readings are for schematic diagram. Allow 15% + or - on all measurements. Always use meter scale which will give greatest deflection within scale limits. All DC measurements made with 1000 ohms per volt voltmeter. All AC voltages made with rectifier type voltmeter. Unless designated otherwise, voltages in table are + DC voltages.
*AC volts.

ALIGNMENT (see note)

OPERATION	ALIGNMENT OF	GENERATOR CONNECTED TO	DUMMY ANTENNA	GENERATOR FREQUENCY	BAND SWITCH SETTING	TUNING COND. SETTING	TRIMMER	REMARKS
1	I.F.	Conv. Grid	.1 mf.	345	BC	Open	C2A C2B	1st I.F.
							C3A C3B	2nd I.F.
2	Rejector	Ant.	200 mmf.	345	BC	Closed	C4	Adjust to minimum
3	Broadcast Band	Ant.	200 mmf.	1500	BC	1500	C8 Osc.	
							C5 Ant.	
4		Ant.	200 mmf.	600	BC	600	C9 Pad	
5	(Repeat operation 3)							
6	(Check calibration and sensitivity at 1500 KC, 900 KC and 600 KC)							
7	Long-Wave Band	Ant.	200 mmf.	300	L.W.	300	C7 Osc.	(with C29 turned tight)
8		Ant.	200 mmf.	300	L.W.	300	C29 Ant.	
9		Ant.	200 mmf.	150	L.W.	150	C27 Pad	
10	(Repeat operations 7, 8 and 9)							
11	Short-Wave Band	Ant.	*	15 MC.	S.W.	15 MC.	C28 Osc.	Rock dial slightly while adjusting
12							C6 Ant.	
13	(Check calibration and sensitivity at 15 MC. and 6 MC.)							
14	(Check operations 1 to 13 inclusive)							

*100 ohm and 200 mmf. in series.
NOTE: Check to see that dial pointer points to last calibrated mark on right hand side of dial when variable condenser rotor plates are fully meshed with stator plates.

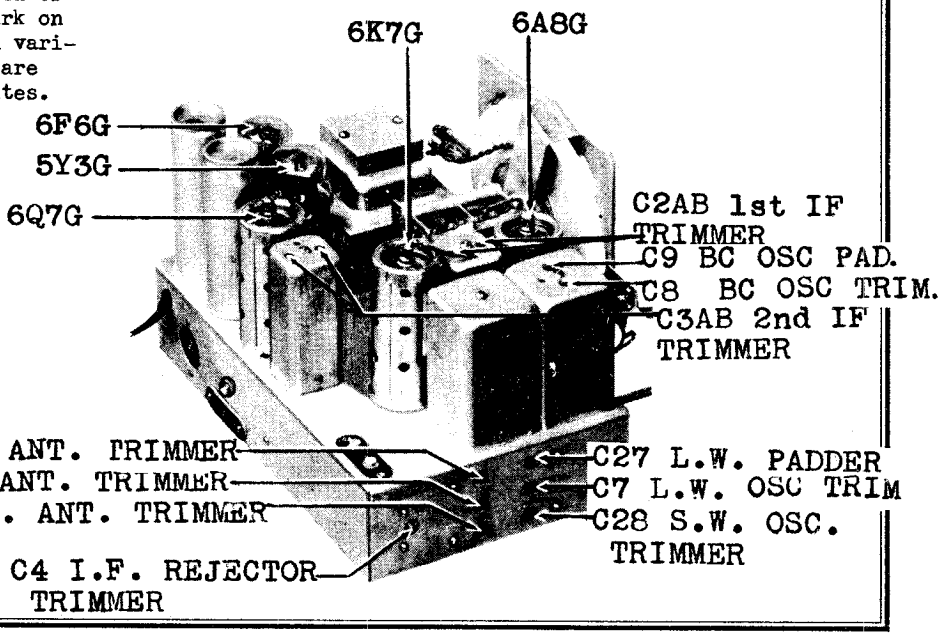

CHASSIS ILLUSTRATION

Model 548-X

©John F. Rider, Publisher

©John F. Rider, Publisher

SPARKS WITHINGTON CO.

Model 417 X

JUNE 1, 1936

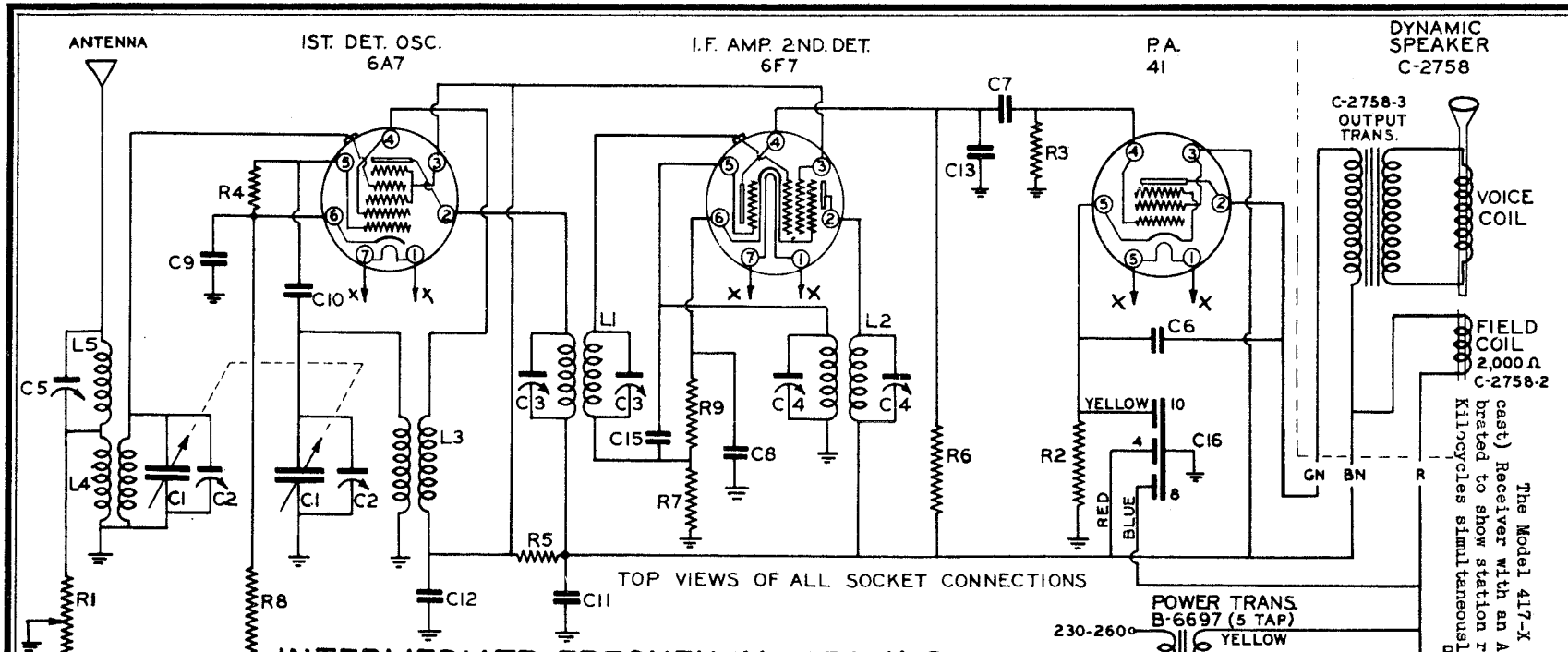

INTERMEDIATE FREQUENCY 456 K:C.

C1 VARIABLE CONDENSER	B-6696	C9 .1 MFD. 100 V.	C-720-69	R1 7,500 Ω V.C. & SWITCH	A-12708		
C2 VAR. COND. TRIMMERS		C10 .00005 MFD. MOLDED	C-720-315	R2 560 Ω	1 W.	C-2797-59A	
C3 NO. 1 I.F. TRIMMER	A-12899	C11 .05 MFD. 400 V.	C-720-57	R3 1,000,000 Ω	.1 W.	C-2794-98A	
C4 NO. 2 I.F. TRIMMER	A-12899	C12 .25 MFD. 200 V.	C-720-137	R4 47,000 Ω	.1 W.	C-2794-23A	
C5 I.F. REJECTOR TRIMMER	A-12834-1	C13 .001 MFD. 400 V.	C-720-136	R5 18,000 Ω	1 W.	C-2797-77A	
C6 .006 MFD. 400 V.	C-720-13	C14 .006-.006 MFD. 1000 V.	C-720-138	R6 1,500,000 Ω	.25 W.	C-2795-32A	
C7 .025 MFD. 400 V.	C-720-41	C15 WIRE CONDENSER	A-12813	R7 1,500 Ω	.25 W.	C-2795-14A	
C8 .5 MFD. 100 V.	C-720-94	C16 4-8-10 ELECTROLYTIC	A-12706	R8 390 Ω	.25 W.	C-2795-57A	
				R9 220 Ω	.25 W.	C-2795-9A	

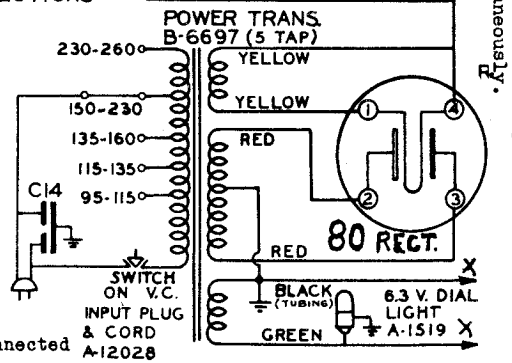

The Model 417-X is a single band (Broadcast) Receiver with an Airplane-type dial calibrated to show station readings in Meters and Kilocycles simultaneously.

L1 NO. 1 I.F. COIL	A-12064-6
L2 NO. 2 I.F. COIL	A-12064-6
L3 OSCILLATOR COIL	A-12055-5
L4 ANTENNA COIL	A-12707
L5 I.F. REJECTOR COIL	A-12666-2

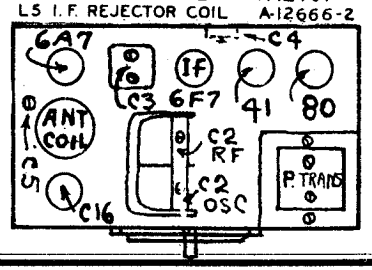

VOLTAGE-RESISTANCE CHART

Voltage Compensator: 115-135
Line Voltage: 115 volts

Position of Volume Control: Full with Antenna Disconnected

* Reading will be zero or 6 volts, depending on twist of heater hook-up wire.

** Cannot be measured with Weston Selective Analyzer No. 665, Type 2.

Tube	Function	Voltage and Resistance of Each Socket Prong to Ground (See Prong Numbers on Schematic Diagram)								
		Measurement	Prong No. 1	Prong No. 2	Prong No. 3	Prong No. 4	Prong No. 5	Prong No. 6	Prong No. 7	Grid Cap
6A7	1st. Det-Oscillator	Volts	*	210	150	150	0	0	*	0
		Ohms	0	250000	250000	250000	55000	400	0	5
6F7	I-F Amplifier-2nd. Det.	Volts	*	225	100	40	0	0	*	0
		Ohms	0	250000	250000	**	0	1500	0	
41	Power Amplifier	Volts	*	300	305	0	0	*	-	-
		Ohms	0	**	**	1 meg.	500	0	-	-
80	Rectifier	Volts	0	310	310	5	-	-	-	-
		Ohms	0	0	0	0	-	-	-	-

MODELS 608,608B,608W,608G
608V,608R,608K
Schematic,Parts,Voltage

SPARKS WITHINGTON CO.

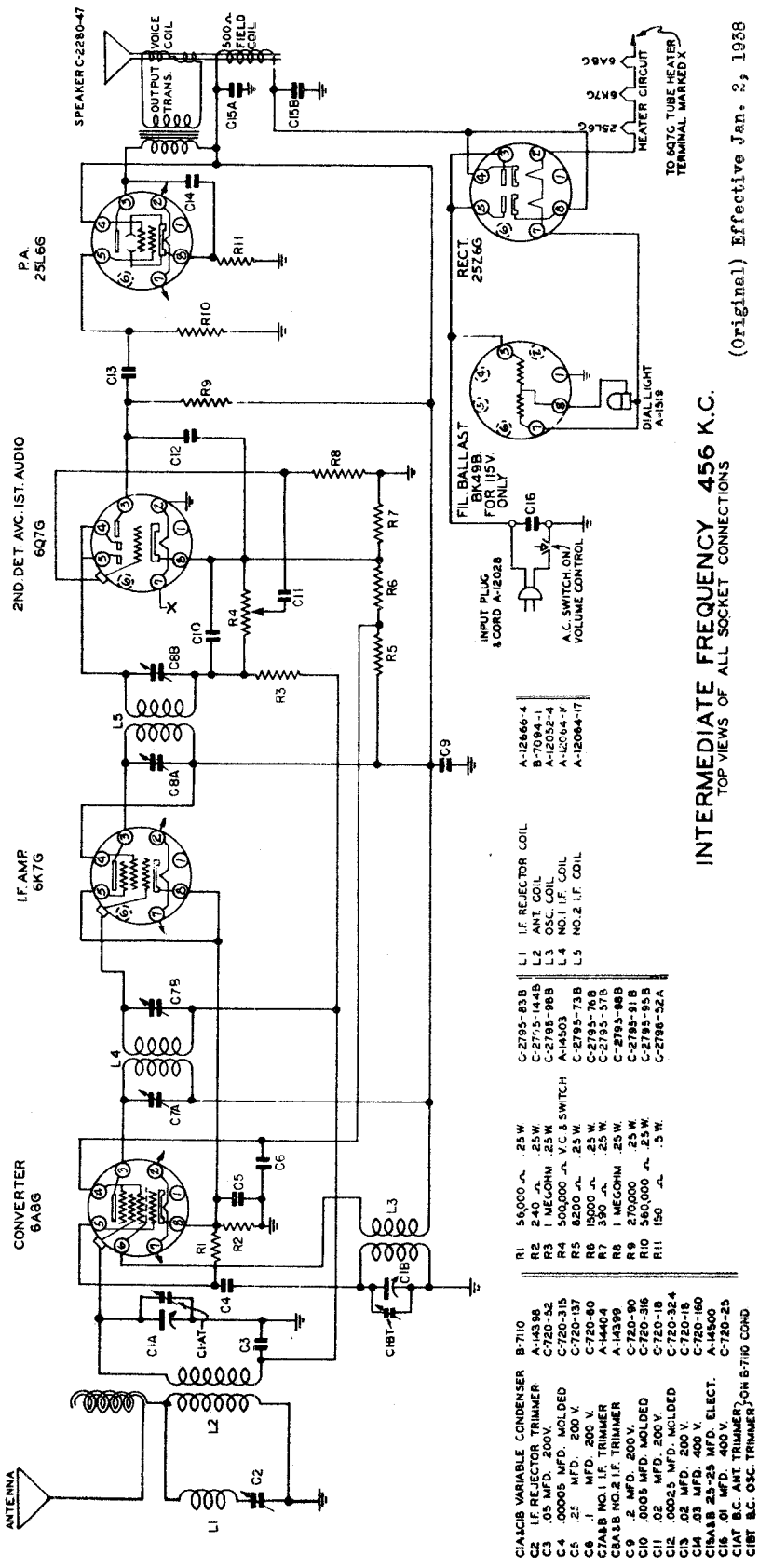

C1A&1B VARIABLE CONDENSER B-7110
C2 I.F. REJECTOR TRIMMER A-14398
C3 .05 MFD. 200V. C-720-52
C4 .00005 MFD. MOLDED C-720-315
C5 .25 MFD. 200 V. C-720-137
C6 .1 MFD. 200 V. C-720-60
C7A&B NO.1 I.F. TRIMMER A-14404
C8A&B NO.2 I.F. TRIMMER A-14399
C9 .2 MFD. 200 V. C-720-90
C10 .0005 MFD. MOLDED C-720-316
C11 .02 MFD. 200 V. C-720-18
C12 .00025 MFD. MOLDED C-720-324
C13 .02 MFD. 200 V. C-720-18
C14 .03 MFD. 400 V. C-720-160
C15A&B 25-25 MFD. ELECT. A-14500
C16 .01 MFD. 400 V. C-720-25
C1AT B.C. ANT. TRIMMER
C1BT B.C. OSC. TRIMMER } ON B-7110 COND

R1 50,000Ω .25 W.
R2 240Ω .25 W.
R3 1 MEGOHM .25 W.
R4 500,000Ω V.C. & SWITCH
R5 8200Ω .25 W.
R6 15000Ω .25 W.
R7 330Ω .25 W.
R8 1 MEGOHM .25 W.
R9 270,000 .25 W.
R10 560,000Ω .25 W.
R11 150Ω .5 W.

C-2795-83B
C-2715-144B
C-2795-98B
A-14503
C-2795-73B
C-2795-76B
C-2795-57B
C-2795-98B
C-2795-91B
C-2795-95B
C-2796-52A

L1 I.F. REJECTOR COIL A-12666-4
L2 ANT. COIL B-7094-1
L3 OSC. COIL A-12052-4
L4 NO.1 I.F. COIL A-14064-1F
L5 NO.2 I.F. COIL A-12064-17

INTERMEDIATE FREQUENCY 456 K.C.

TOP VIEWS OF ALL SOCKET CONNECTIONS

(Original) Effective Jan. 2, 1938

VOLTAGE CHART

Line Voltage: 115 volts AC — Position of Volume Control: Full with Antenna Disconnected

Tube	Function	Voltage of Socket Prongs to Gnd. (See Prong Nos. on Schematic Diagram)								
		No. 1	No. 2	No. 3	No. 4	No. 5	No. 6	No. 7	No. 8	Grid Cap
6A8G	Converter	0	12	95	55	-5	95	6.5	3.5	0
6K7G	I.F.	-	19	95	95	3.5	-	12	3.5	0
6Q7G	2nd Det. AVC - 1st Audio	-	6.5	30	0	0	0	0	1.4	0
25L6G	P.A.	-	44	90	95	0	0	19	6	-
25Z6G	Rect.	-	69	115	125	115	-	44	125	-
BK49B	Fil. Ballast	0	-	115	-	-	-	69	74	-

Notes: Voltage readings are for schematic diagram. Allow 15% + or - on all measurements. Always use meter scale which will give greatest deflection within scale limits. All DC measurements made with 1000 ohms per volt voltmeter. All AC voltages made with rectifier type voltmeter. Unless designated otherwise, voltages in table are + DC voltages. *AC volts.

Sparton Superheterodyne Models

608 &608B
608-W (Walnut)
608-G (Green)
608-V (Ivory)
608-R (Red)
608-K (Black)

©John F. Rider, Publisher

MODELS 638-6,688-6
Socket,Trimmers,Voltage
Alignment

SPARKS WITHINGTON CO.

VOLTAGE CHART

MODELS 608,608B,608W,608G
608V,608R,608K
Socket,Trimmers,Alignment

"A" Battery - Good

Position of Volume Control: Full with Antenna Disconnected

Tube	Function	Voltage of Socket Prongs to Gnd. (See Prong Nos. on Schematic Diagram)								
		No. 1	No. 2	No. 3	No. 4	No. 5	No. 6	No. 7	No. 8	Grid Cap
1C7G	Converter	-	0	110	45	13	72	2	-	-.5
1D5G	1st I.F. Amp.	-	0	110	45	-	-	2	-	-.3
1D5G	2nd I.F. Amp.	-	0	110	50	-	-	2	-	-.5
1H6G	Det. AVC	-	0	5	-.1	-.6	-.2	2	-	-
1H4G	A.F. Amp.	-	0	95	-	.2	-	2	-	-
1E7G	Power Amp.	-	0	105	6	6	105	1.9	110	-

Notes: Voltage readings are for schematic diagram. Allow 15% + or - on all measurements.
Always use meter scale which will give greatest deflection within scale limits. All DC measurements made with 1000 ohms per volt voltmeter.
Unless designated otherwise, voltages in table are + DC voltages.
*AC volts.

ALIGNMENT (see note)

OPERATION	ALIGNMENT OF	GENERATOR CONNECTED TO	DUMMY ANTENNA	GENERATOR FREQUENCY	BAND SWITCH SETTING	TUNING COND. SETTING	TRIMMER	REMARKS
1	I.F.	Conv. Grid	.1 mf.	456	BC	Open	C33 A,B	3rd I.F. Trans.
							C32 A,B	2nd I.F. Trans.
							C31 A,B	1st I.F. Trans.
2	Rejector	Ant.	150 mmf.	456	BC	Open	C34	Adjust to minimum
3	Broadcast Band	Ant.	150 mmf.	1500	BC	1500	C4 Osc.	
							C5 Ant.	
4		Ant.	150 mmf.	600	BC	600	C5 Pad	
5	(Repeat operation 3)							
6	(Check calibration and sensitivity at 1500 KC, 900 KC and 600 KC)							
7	S.W. Band	Ant.	400 ohm	15 MC	SW	15 MC	C2 Ant.	
8	(Check operations 1 to 7 inclusive)							

NOTE: Check to see that dial pointer points to last calibrated mark on right hand side of dial when variable condenser rotor plates are fully meshed with stator plates.

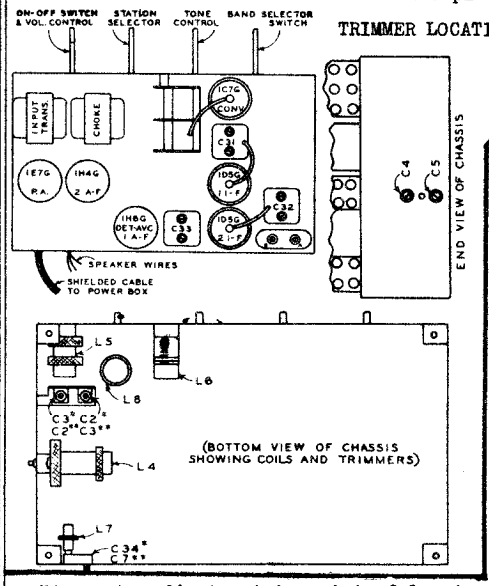

TRIMMER LOCATIONS

MODELS 608,608B,608W,608G,608V,608R,608K.

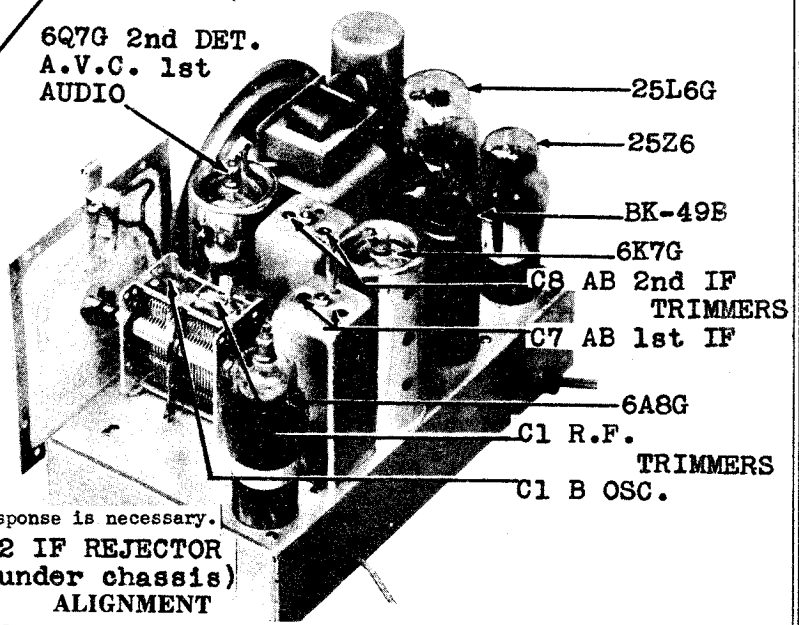

*Accurate adjustment to point of least response is necessary.
NOTE: Check to see that dial pointer is parallel to horizontal lines on dial when variable condenser rotor plates are fully meshed with stator plates.

ALIGNMENT

OPERATION	ALIGNMENT OF	GENERATOR CONNECTED TO	DUMMY ANTENNA	GENERATOR FREQUENCY	BAND SWITCH SETTING	TUNING COND. SETTING	TRIMMER	REMARKS
1	I.F.	Ant.	.1 mf.	456	BC	Open	C7A C7B	1st I.F. Trans.
							C8A C8B	2nd I.F. Trans.
2	Rejector	Ant.	150 mmf.	456	BC	closed	C2	Adjust to minimum*
3	Broadcast Band	Ant.	150 mmf.	1500	BC	1500	C-1AB osc.	
							C-1AT ant.	
4	(Check calibration and sensitivity at 1500 KC, 900 KC and 600 KC)							
5	(Check operations 1 to 4 inclusive)							

MODELS 638-6 and 688-6.

©John F. Rider, Publisher

MODELS 638-6, 688-6
Schematic, Parts

SPARKS WITHINGTON CO.

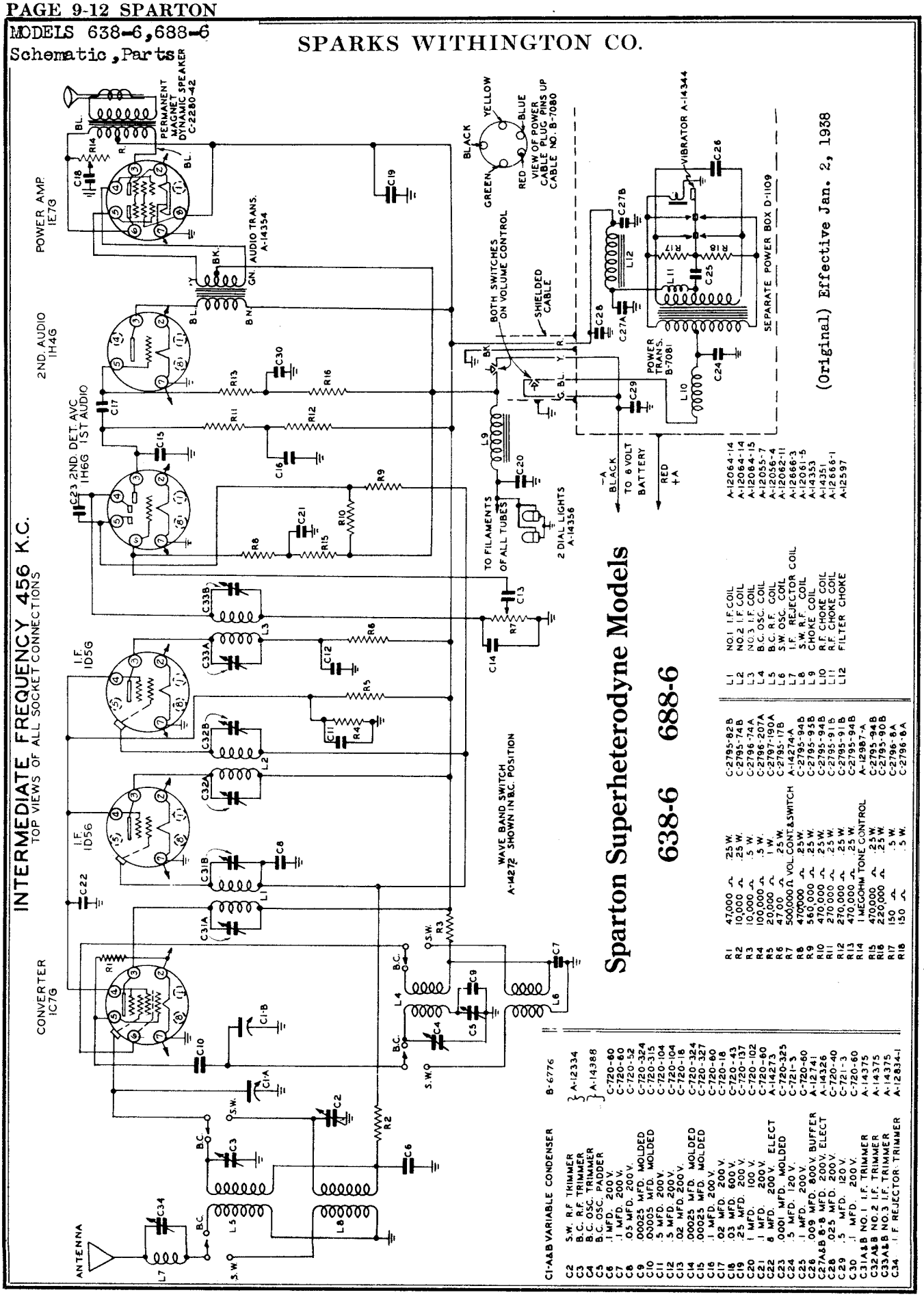

C1-A&B	VARIABLE CONDENSER	B-6776
C2	S.W. R.F. TRIMMER	A-12334
C3	B.C. R.F. TRIMMER	
C4	B.C. OSC. TRIMMER	A-14388
C5	B.C. OSC. PADDER	
C6	.1 MFD. 200 V.	C-720-60
C7	.1 MFD. 200 V.	C-720-60
C8	.05 MFD. 200 V.	C-720-52
C9	.00025 MFD. MOLDED	C-720-324
C10	.00005 MFD. MOLDED	C-720-315
C11	.5 MFD. 200 V.	C-720-104
C12	.5 MFD. 200 V.	C-720-104
C13	.02 MFD. 200 V.	C-720-18
C14	.00025 MFD. MOLDED	C-720-324
C15	.00025 MFD. MOLDED	C-720-327
C16	.1 MFD. 200 V.	C-720-60
C17	.02 MFD. 200 V.	C-720-18
C18	.03 MFD. 600 V.	C-720-43
C19	.25 MFD. 200 V.	C-720-137
C20	1 MFD. 100 V.	C-720-102
C21	.1 MFD. 200 V.	C-720-60
C22	8 MFD. 200 V. ELECT	A-14273
C23	.0001 MFD. MOLDED	C-720-325
C24	.5 MFD. 120 V.	C-721-3
C25	.1 MFD. 200 V.	C-720-60
C26	.009 MFD. 800 V. BUFFER	A-12741
C27A&B	8-8 MFD. 200 V. ELECT	A-14326
C28	.025 MFD. 200 V.	C-720-40
C29	.5 MFD. 120 V.	C-721-3
C30	.1 MFD. 200 V.	C-720-60
C31A&B	NO. 1 I.F. TRIMMER	A-14375
C32A&B	NO. 2 I.F. TRIMMER	A-14375
C33A&B	NO. 3 I.F. TRIMMER	A-14375
C34	I.F. REJECTOR TRIMMER	A-12834-1

R1	47,000 Ω .25 W.	C-2795-82B
R2	10,000 Ω .25 W.	C-2795-74B
R3	10,000 Ω .5 W.	C-2796-74A
R4	100,000 Ω .5 W.	C-2796-207A
R5	20,000 Ω 1 W.	C-2797-190A
R6	47.00 Ω .25 W.	C-2795-17B
R7	500,000 Ω VOL. CONT. & SWITCH	A-14274-A
R8	470,000 Ω .25 W.	C-2795-94B
R9	560,000 Ω .25 W.	C-2795-95B
R10	470,000 Ω .25 W.	C-2795-94B
R11	270,000 Ω .25 W.	C-2795-91B
R12	270,000 Ω .25 W.	C-2795-91B
R13	470,000 Ω .25 W.	C-2795-94B
R14	1 MEGOHM TONE CONTROL	A-12987-A
R15	470,000 Ω .25 W.	C-2795-94B
R16	220,000 Ω .25 W.	C-2795-90B
R17	150 Ω .5 W.	C-2796-8A
R18	150 Ω .5 W.	C-2796-8A

L1	NO.1 I.F. COIL	A-12064-14
L2	NO.2 I.F. COIL	A-12064-14
L3	NO.3 I.F. COIL	A-12064-15
L4	B.C. OSC. COIL	A-12055-7
L5	B.C. R.F. COIL	A-12056-4
L6	S.W. OSC. COIL	A-12062-11
L7	I.F. REJECTOR COIL	A-12666-3
L8	S.W. R.F. COIL	A-12061-5
L9	CHOKE COIL	A-14353
L10	R.F. CHOKE COIL	A-14351
L11	R.F. CHOKE COIL	A-12666-1
L12	FILTER CHOKE	A-12597

©John F. Rider, Publisher

©John F. Rider, Publisher

SPARKS WITHINGTON CO.

MODEL 738
Schematic, Parts
Socket, Trimmers
Voltage

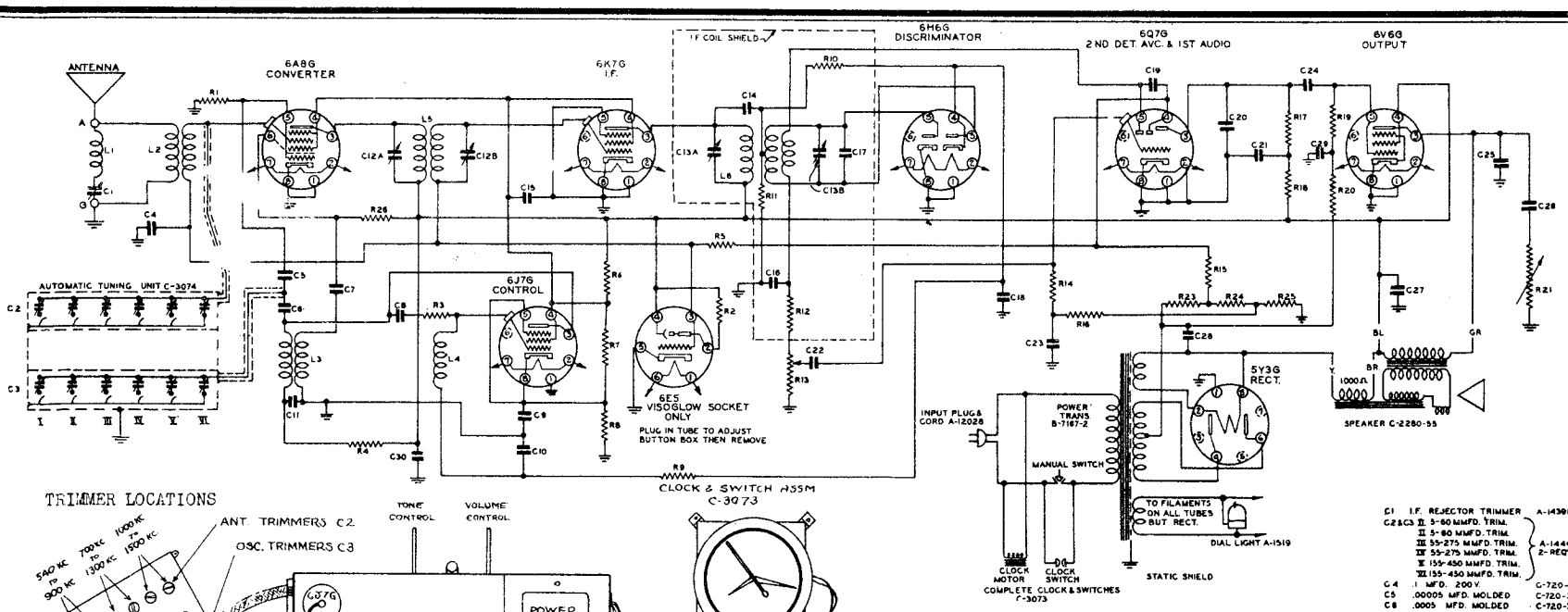

INTERMEDIATE FREQUENCY 456 K.C.
TOP VIEWS OF ALL SOCKET CONNECTIONS

(Original) Effective Jan. 2, 1938

Sparton Superheterodyne Model 738

C1	I.F. REJECTOR TRIMMER	A-14398
C2&C3	I. 3-60 MMFD. TRIM.	A-14448 2-REQ'D
	II. 3-60 MMFD. TRIM.	
	III. 55-275 MMFD. TRIM.	
	IV. 55-275 MMFD. TRIM.	
	V. 155-450 MMFD. TRIM.	
	VI. 155-450 MMFD. TRIM.	
C4	.1 MFD. 200 V.	C-720-80
C5	.00005 MFD. MOLDED	C-720-320
C6	.0005 MFD. MOLDED	C-720-355
C7	.006 MFD. 600 V.	C-720-15
C8	.0001 MFD. MOLDED	C-720-339
C9	.1 MFD. 200 V.	C-720-80
C10	.2 MFD. 200 V.	C-720-90
C11	.2 MFD. 400 V.	C-720-74
C12A&C12B	I.F. TRIMMER	A-14404
C13A&C13B	I.F. TRIMMER	A-14440
C14	.00005 MFD. MOLDED	C-720-320
C15	.05 MFD. 400 V.	C-720-57
C16	.00025 MFD. MOLDED	C-720-318
C17	.00007 MFD. MOLDED	C-720-349
C18	.1 MFD. 200 V.	C-720-80
C19	.0001 MFD. MOLDED	C-720-339
C20	.00025 MOLDED	C-720-319
C21	.1 MFD. 400 V.	C-720-81
C22	.05 MFD. 200 V.	C-720-54
C23	.1 MFD. 200 V.	C-720-80
C24	.05 MFD. 400 V.	C-720-46
C25	.008 MFD. 600 V.	C-720-154
C26	.06 MFD. 600 V.	C-720-155
C27	30 MFD. 300 V.	A-14072
C28	16 MFD. 450 V.	A-14073
C29	.2 MFD. 200 V.	C-720-90
C30	.05 MFD. 400 V.	C-720-57
R1	58 000 Ω .25 W.	C-2795-838
R2	1 MEGOHM .25 W.	C-2795-988
R3	100 000 Ω .25 W.	C-2795-868
R4	36 000 Ω .25 W.	C-2795-838
R5	470 000 Ω .25 W.	C-2795-948
RC	10 000 Ω 2 W.	C-2798-183A
R7	82 00 Ω 5 W.	A-14322-4
R8	330 Ω .25 W.	C-2795-1478
R9	220 000 Ω .25 W.	C-2795-908
R10	470 000 Ω .25 W.	C-2795-948
R11	470 000 Ω .25 W.	C-2795-948
R12	47 000 Ω .25 W.	C-2795-828
R13	VOLUME CONTROL 250 000 Ω	A-14075-A1
R14	1 MEGOHM .25 W.	C-2795-988
R15	1 MEGOHM .25 W.	C-2795-988
R16	220 000 Ω .25 W.	C-2795-908
R17	220 000 Ω .25 W.	C-2795-908
R18	220 000 Ω .25 W.	C-2795-908
R19	510 000 Ω .25 W.	C-2795-2248
R20	100 000 Ω .25 W.	C-2795-868
R21	TONE CONTROL 500 000 Ω	A-14089-A
R23	150 Ω 2 W.	C-2798-52A
R24	24 Ω .25 W.	C-2795-1208
R25	27 Ω .25 W.	C-2795-1218
R26	22 000 Ω .5 W.	C-2798-74A
L1	I.F. REJECTOR COIL	A-12886-5
L2	ANT. COIL	A-14605
L3	OSC. COIL	A-12055-9
L4	R.F. CHOKE	A-12868-4
L5	NO. 1 I.F. COIL	A-14602
L6	NO. 2 I.F. COIL	A-14603

VOLTAGE CHART

Line Voltage: 115 volts — Position of Volume Control: Full with Antenna Disconnected

Tube	Function	Voltage of Socket Prongs to Gnd. (See Prong Nos. on Schematic Diagram)								
		No. 1	No. 2	No. 3	No. 4	No. 5	No. 6	No. 7	No. 8	Grid Cap
6A8G	Converter	0	0	250	100	-5	150	6.2*	0	-.1
6K7G	I.F.	0	0	250	100	0	250	6.2*	0	-.1
6H6G	Discriminator	0	0	.1	0	.1	0	6.2*	0	-
6J7G	A.F.C.	0	0	110	100	4	-	6.2*	4	0
6Q7G	Det.-AVC-1st A-F Amp.	0	0	50	0	0	0	6.2*	0	-.1
6V6G	Output	0	0	250	250	-.1	-	6.2*	0	-
5Y3G	Rectifier	340*	-	350*	-	350*	-	340*	0	-

Notes: Voltage readings are for schematic diagram. Allow 15% + or - on all measurements.
Always use meter scale which will give greatest deflection within scale limits. All DC measurements made with 1000 ohms per volt voltmeter. All AC voltages made with rectifier type voltmeter.
Unless designated otherwise, voltages in table are + DC voltages.
*AC volts.

MODEL 738 (Selectime)
Alignment
Selectronne Data

SPARKS WITHINGTON CO.

SPARTON RADIO

ADJUSTMENT OF
THE SPARTON SELECTRONNE
AND
ALIGNMENT OF
MODEL 738.

WARNING - Never attempt to adjust the Selectronne with the 6H6G Discriminator tube in the socket.

Unless the 6H6G Discriminator tube is removed when the Selectronne is adjusted, automatic frequency control will prevent correct trimmer adjustments, with the result that unsatisfactory reception of stations may occur. With the 6H6G Discriminator tube left in the socket, automatic frequency control action will bring in the station and close the Viso-Glo before the trimmers have been completely adjusted.

ALIGNMENT

OPERATION	ALIGNMENT OF	GENERATOR CONNECTED TO	DUMMY ANTENNA	GENERATOR FREQUENCY	TRIMMER	REMARKS
1	I.F.	6A8 Grid	.1 mf.	456	C13A C12A C12B	2nd I.F. (Pri.) 1st I.F.
2	Discriminator	6A8 Grid	.1 mf.	456	C13B	Adjust to MAXIMUM with bakelite screwdriver.*
3	Rejector	Ant.	200 mmf.	456	C1	Adjust to minimum
4	Selectronne**	Ant.	200 mmf.	1500	C3 (1000 to 1500 KC) Osc. C2 (1000 to 1500 KC) R.F.	
5	Selectronne**	Ant.	200 mmf.	1000	C3 (700 to 1300 KC) Osc. C2 (700 to 1300 KC) R.F.	
6	Selectronne**	Ant.	200 mmf.	600	C3 (540 to 900 KC) Osc. C2 (540 to 900 KC) R.F.	
7	Check AFC by noting output on output meter, then short out AFC by grounding the grid return circuit of 6J7G control tube at a point between L4 R.F. choke and C10 .2 mf. condenser. If output changes appreciably touch up C13B (Discriminator trimmer) until there is no change in output as the short is alternately connected to and removed from the AFC circuit.	6A8 Grid	.1 mf.	1400	C3 (1400 KC) Osc. C2 (1400 KC) R.F.	
8	(Check operations 1 to 7 inclusive)					

* This Discriminator circuit is different than used in Models 1068, 1268, 1568, etc. Do not confuse.

**For adjusting Selectronne to six broadcast stations see Bulletin 17.

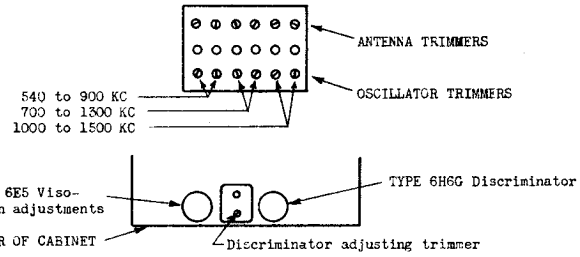

HOW TO ADJUST THE SPARTON SELECTRONNE IN THE MODEL 738 "SELECTIME"

WARNING: All final adjustments of the Selectronne trimmers should be made in the customer's home, with the receiver connected to the regular antenna system with which it will be used.

1. Select six favorite nearby broadcast stations and detach the corresponding call letter tabs from the station call letter tab sheets.

2. Remove the Selectronne escutcheon plate from the front of the cabinet by means of the two screws. This exposes the steel plate with the slots for holding the station call letter tabs.

3. The six buttons of the Selectronne are arranged in three groups according to frequency limits - 540 to 900 kc., 700 to 1300 kc. and 1000 to 1500 kc. (See illustration also back cover of selectronne box). The six tabs corresponding to the six broadcast stations which have been chosen must be arranged in the steel plate so that the frequency (kilocycle) of each station will be included in the frequency limits of the proper group.

For example: A station having a frequency of 610 kc. should be placed in the 540 to 900 kc. group; a station at 950 should be placed in the 700 to 1300 kc. group, etc.

Note: Each group has considerable overlap to allow for the selection of six stations which may have frequency allocations comparatively close together.

4. Remove type 6H6G tube (Discriminator) from chassis (see illustration).

5. Adjust Selectronne trimmers for each one of the six stations as follows:

(A) Two trimmers are provided for each one of the six stations. They are reached through the two holes arranged in rows one above the other in the back cover of the Selectronne.

(B) Obtain 6E5 Viso-Glo from your dealer and insert in 6E5 socket for use as an indicating meter (This tube is not supplied with set).

(C) Now from the back of the cabinet, with an ordinary screw-driver adjust the oscillator trimmer (bottom hole) in the row corresponding to the proper station, until the station is loudest. Screw this trimmer to the right or left until the station is loudest.

Care should be taken in turning the adjusting screws so that they will not become disengaged from the trimmers by being turned out too far.

(D) In the same manner adjust the antenna trimmer (top hole) to this same station.

Note: Perfect adjustment of these trimmers is easily obtained by observing the Viso-Glo tube so that every adjustment of the trimmers may be watched. Perfect adjustment is obtained when further turning of the trimmers will not result in any smaller shaded area between the green light sections of the Viso-Glo.

(E) Re-adjust the oscillator trimmer (bottom hole) while watching the Viso-Glo to see if the shaded area can be made smaller.

6. Repeat the procedure in paragraph 5 for each of the six stations.

7. When all trimmers have been properly adjusted, replace type 6H6G Discriminator tube and attach Selectronne escutcheon plate to front of cabinet.

8. Any of the six stations to which the SPARTON Selectronne has been adjusted, may now be instantly received simply by pushing the Selectronne button for the desired station with the Band Switch knob pushed in; that is, in the automatic position.

NOTE: In case all six of the buttons should become depressed through improper manipulation of the Selectronne, simply reach into the Selectronne box (from the back of the cabinet) through the side, and apply a slight pressure of the fingers under the latching bar which runs across the frame work in front of the trimmer box. This will immediately release all buttons.

IMPORTANT

Always check the discriminator circuit to see if it is in proper adjustment and adjust it if necessary before adjusting the Selectronne.

TO CHECK THE ADJUSTMENT OF THE DISCRIMINATOR CIRCUIT, note carefully the Viso-Glo, then pull Discriminator tube out and see if the Viso-Glo opens or closes. If it opens, the Selectronne is not adjusted right. If it closes, the Discriminator is not adjusted accurately.

IMPORTANT: The Type 6H6G Discriminator tube must be in its socket when adjusting the discriminator circuit, and out of its socket when adjusting the Selectronne trimmers.

TO ADJUST THE DISCRIMINATOR CIRCUIT, tune in a strong station so that the Viso-Glo closes as much as possible. Then put Discriminator tube in and insert an insulated (bakelite) screw driver in the hole nearest the back of the chassis in the aluminum can located between the 6H6G Discriminator tube and the 6E5 Viso-Glo. Turn the Discriminator circuit trimmer very slightly one way or the other until the Viso-Glo closes as far as possible. Then pull Discriminator tube out. The Viso-Glo should show the same position. If it does not, adjust more accurately with Discriminator tube in socket.

CAUTION: The blade of the screw-driver positively must be an insulated (bakelite) one.

WARNING - Do not attempt to adjust the other trimmer in this last can or a trimmer in any of the other cans. Only adjust the trimmer nearest the back of the chassis and in the can located between the 6H6G and 6E5 tubes.

©John F. Rider, Publisher

©John F. Rider, Publisher

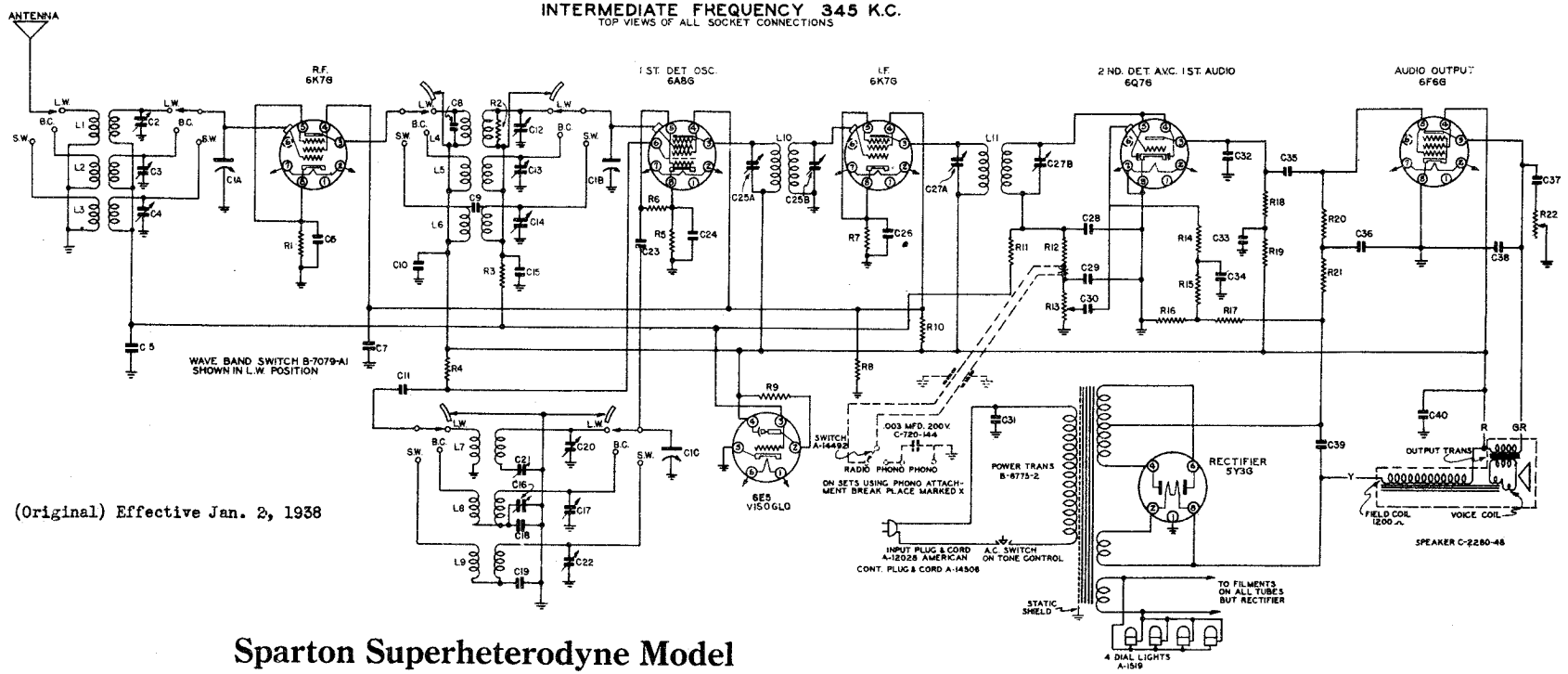

(Original) Effective Jan. 2, 1938

Sparton Superheterodyne Model 748-X

VOLTAGE CHART

Line Voltage: 115 volts

Position of Volume Control: Full with Antenna Disconnected

Tube	Function	Voltage of Socket Prongs to Gnd. (See Prong Nos. on Schematic Diagram)								
		No. 1	No. 2	No. 3	No. 4	No. 5	No. 6	No. 7	No. 8	Grid Cap
6K7G	R-F	0	6.3*	255	115	2	-	0	2	-.2
6A8G	Converter	0	6.3*	255	115	-6	150	0	5	0
6K7G	I-F	0	6.3*	255	115	4	-	0	4	0
6Q7G	Det-AVC-1st A-F Amp.	0	6.3*	55	-.5	-.5	-.5	0	0	-1
6F6G	Power Amplifier	0	6.3*	235	250	.5	1	0	0	-
5Y3G	Rectifier	0	345*	-	350*	-	350*	-	345*	-
6E5	Viso-Glo	6.3*	12	0	250	0	0	-	-	-

Notes: Voltage readings are for schematic diagram. Allow 15% + or - on all measurements. Always use meter scale which will give greatest deflection within scale limits. All DC measurements made with 1000 ohms per volt voltmeter. All AC voltages made with rectifier type voltmeter. Unless designated otherwise, voltages in table are + DC voltages.
*AC volts.

C1A C1B & C1C	VARIABLER COND.	B-7044
C2	L.W. ANT TRIMMER	A-14517-3
C3	B.C. ANT TRIMMER	
C4	S.W. ANT. TRIMMER	
C5	.05 MFD. 200 V.	C-720-52
C6	.05 MFD. 200 V.	C-720-52
C7	.1 MFD. 200 V.	C-720-60
C8	.000025 MFD. MOLDED	C-720-319
C9	12 MMFD. COUPLER	C-720-354
C10	.1 MFD. 400 V.	C-720-61
C11	.006 MFD. 600 V.	C-720-17
C12	L.W. R.F. TRIMMER	A-14517-1
C13	B.C. R.F. TRIMMER	
C14	S.W. R.F. TRIMMER	
C15	.05 MFD. 200 V.	C-720-52
C16	B.C. OSC. PADDER	A-14388
C17	B.C. OSC. TRIMMER	
C18	.00035 MFD. MOLDED	C-720-329
C19	.004 MFD. MOLDED	C-720-351
C20	L.W. OSC. TRIMMER	A-14517-2
C21	L.W. OSC. PADDER	
C22	S.W. OSC. TRIMMER	
C23	.00005 MFD. MOLDED	C-720-320
C24	.05 MFD. 200 V.	C-720-52
C25A&B	NO. 1 I.F. TRIMMER	A-14314
C26	.05 MFD. 200 V.	C-720-52
C27A&B	NO. 2 I.F. TRIMMER	A-14490
C28	.000035 MFD. MOLDED	C-720-329
C29	.0001 MFD. MOLDED	C-720-325
C30	.02 MFD. 200 V.	C-720-145
C31	.05 MFD. 600 V.	C-720-157
C32	.00025 MFD. MOLDED	C-720-319*
C33	.1 MFD. 400 V.	C-720-61
C34	.1 MFD. 200 V.	C-720-60
C35	.05 MFD. 400 V.	C-720-57
C36	.1 MFD. 200 V.	C-720-60
C37	.03 MFD. 600 V.	C-720-12
C38	.002 MFD. 600 V.	C-720-156
C39	16 MFD. 450 V.	A-14073
C40	30 MFD. 300 V.	A-14072

R1	560 Ω .25 W.	C-2795-598
R2	100,000 Ω .25 W.	C-2795-868
R3	100,000 Ω .25 W.	C-2795-868
R4	22,000 Ω 5 W.	C-2796-78A
R5	470 Ω .25 W.	C-2795-588
R6	36,000 Ω .25 W.	C-2795-838
R7	860 Ω .25 W.	C-2795-598
R8	21000 Ω 1 W.	C-2797-79A
R9	1 MEGOHM .25 W.	C-2795-988
R10	15,000 Ω 2 W.	C-2796-76A
R11	1 MEGOHM .25 W.	C-2795-988
R12	54,000 Ω .25 W.	C-2795-838
R13	250,000 Ω VOL. CONTROL	A-14515
R14	960,000 Ω .25 W.	C-2795-958
R15	1 MEGOHM .25 W.	C-2795-988
R16	36 Ω CANDOHM	A-14188
R17	210 Ω CANDOHM	
R18	270,000 Ω .25 W.	C-2795-918
R19	100,000 Ω .25 W.	C-2795-868
R20	270,000 Ω .25 W.	C-2795-918
R21	270,000 Ω .25 W.	C-2795-918
R22	1 MEG. TONE CONT. & SWITCH	A-14217-A1

L1	L.W. ANT COIL	A-12056-6
L2	B.C. ANT COIL	A-14209-1
L3	S.W. ANT COIL	
L4	L.W. R.F. COIL	A-12056-6
L5	B.C. R.F. COIL	A-14210
L6	S.W. R.F. COIL	
L7	L.W. OSC. COIL	A-12294-4
L8	B.C. OSC. COIL	A-14213
L9	S.W. OSC. COIL	
L10	NO. 1 I.F. COIL	A-12064-3
L11	NO. 2 I.F. COIL	A-12064-2Z

MODEL 748X
MODELS 768,768X,778,778X SPARKS-WITHINGTON CO.
Socket,Trimmers,Alignment

MODELS 768, 768-X, 778. 778-X. ALIGNMENT (see note)

OPERATION	ALIGNMENT OF	GENERATOR CONNECTED TO	DUMMY ANTENNA	GENERATOR FREQUENCY	BAND SWITCH SETTING	TUNING COND. SETTING	TRIMMER	REMARKS
1	I.F.	1st. Det. Grid	.1 mf.	456	BC	Open	C35 A,B	2nd I.F. Trans.
							C34 A,B	1st I.F. Trans.
2	Broadcast Band	Ant.	200 mmf.	1500	BC	1500	C8 Osc.	
							C5 RF	
							C2 Ant.	
3		Ant.	200 mmf.	600	BC	600	C11 Pad	*
4	(Repeat operation 2)							
5	(Check calibration and sensitivity at 1500 KC, 900 KC and 600 KC)							
6	1st short wave band	Ant.	100 ohm 200 mmf. series	6 MC.	1st S.W.	6 MC.	C9 Osc.	
							C6 RF	
							C3 Ant.	
7	(Check calibration at 1.95 MC and 6 MC.)							
8	2nd short wave band	Ant.	100 ohm 200 mmf. series	18 M.C.	2nd S.W.	18 MC.	C10 Osc.	Rock dial slightly while adjusting
							C7 RF	
							C4 Ant.	
9	(Check calibration and sensitivity at 18 MC. and 6 MC.)							
10	(Check operations 1 to 9 inclusive)							

*Rock variable condenser slightly while adjusting for maximum output.

NOTE: Check to see that dial pointer is parallel to horizontal lines on dial when variable condenser rotor plates are fully meshed with stator plates.

MODEL 748-X ALIGNMENT (see note)

OPERATION	ALIGNMENT OF	GENERATOR CONNECTED TO	DUMMY ANTENNA	GENERATOR FREQUENCY	BAND SWITCH SETTING	TUNING COND. SETTING	TRIMMER	REMARKS
1	I.F.	Conv. Grid	.1 mf.	345	BC	Open	C27A C27B	2nd I.F. Trans.
							C25A C25B	1st I.F. Trans.
2	Broadcast Band	Ant.	200 mmf.	1500	BC	1500	C17 Osc.	
							C13 RF	
							C5 Ant.	
3		Ant.	200 mmf.	600	BC	600	C16 Pad	
4	(Repeat operation 2)							
5	(Check calibration and sensitivity at 1500 KC, 900 KC and 600 KC)							
6	Long-Wave Band	Ant.	200 mmf.	300	L.W.	300	C20 Osc.	
							C12 RF	
							C2 Ant.	
7		Ant.	200 mmf.	150	L.W.	150	C21 Pad	
8	(Repeat operation 6)							
9	(Check calibration and sensitivity at 300 KC and 150 KC)							
10	Short-Wave Band	Ant.	100 ohm 200 mmf. series	18 MC.	SW.	18 MC.	C22 Osc.	Rock dial slightly while adjusting
							C14 RF	
							C4 Ant.	
11	(Check calibration and sensitivity at 18 MC. and 6 MC.)							
12	(Check operations 1 to 11 inclusive)							

NOTE: Check to see that dial pointer points to last calibrated mark on right hand side of dial when variable condenser rotor plates are fully meshed with stator plates.

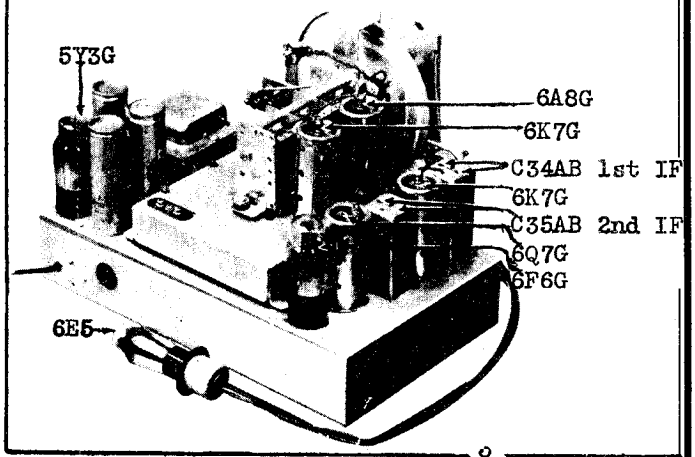

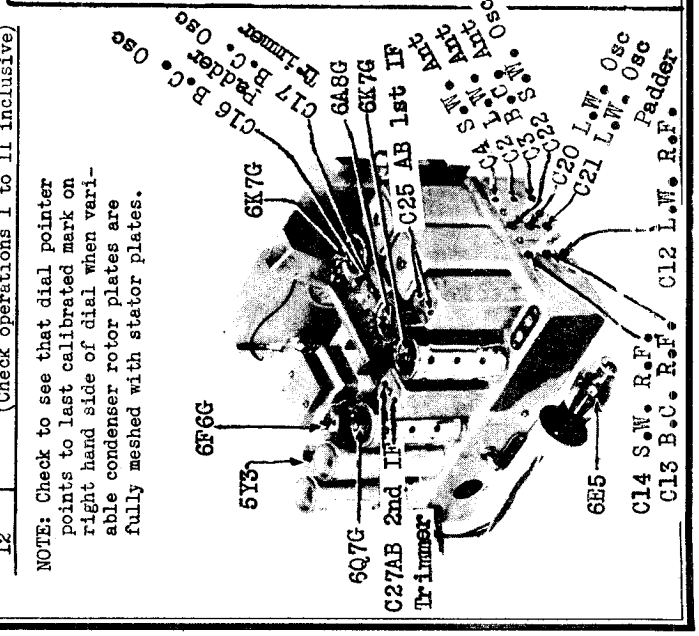

©John F. Rider, Publisher

©John F. Rider, Publisher

(Original) Effective Jan. 2, 1938

INTERMEDIATE FREQUENCY 456 K.C.

TOP VIEWS OF ALL SOCKET CONNECTIONS

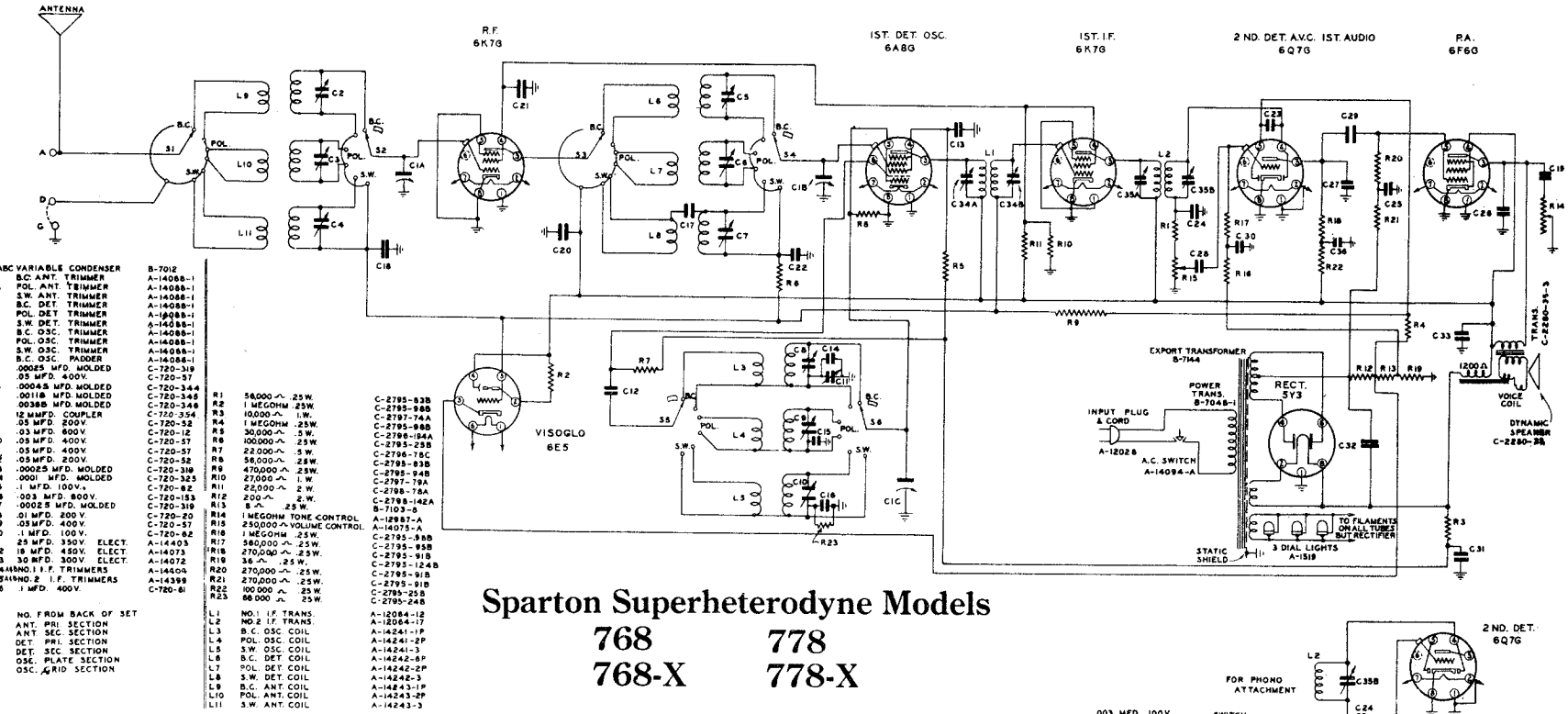

C1	ABC VARIABLE CONDENSER	B-7012
C2	B.C. ANT. TRIMMER	A-14088-1
C3	POL. ANT. TRIMMER	A-14088-1
C4	S.W. ANT. TRIMMER	A-14088-1
C5	B.C. DET. TRIMMER	A-14088-1
C6	POL. DET. TRIMMER	A-14088-1
C7	S.W. DET. TRIMMER	A-14088-1
C8	B.C. OSC. TRIMMER	A-14088-1
C9	POL. OSC. TRIMMER	A-14088-1
C10	S.W. OSC. TRIMMER	A-14088-1
C11	B.C. OSC. PADDER	A-14084-1
C12	.00025 MFD. MOLDED	C-720-319
C13	.05 MFD. 400V.	C-720-57
C14	.00045 MFD. MOLDED	C-720-344
C15	.00118 MFD. MOLDED	C-720-348
C16	.0038 MFD. MOLDED	C-720-349
C17	12 MMFD. COUPLER	C-720-354
C18	.05 MFD. 200V.	C-720-52
C19	.03 MFD. 600V.	C-720-12
C20	.05 MFD. 400V.	C-720-57
C21	.05 MFD. 400V.	C-720-57
C22	.05 MFD. 200V.	C-720-52
C23	.00025 MFD. MOLDED	C-720-319
C24	.0001 MFD. MOLDED	C-720-323
C25	.1 MFD. 100V.	C-720-82
C26	.003 MFD. 800V.	C-720-153
C27	.00025 MFD. MOLDED	C-720-319
C28	.01 MFD. 200V.	C-720-20
C29	.05 MFD. 400V.	C-720-57
C30	.1 MFD. 100V.	C-720-82
C31	25 MFD. 350V. ELECT.	A-14403
C32	16 MFD. 450V. ELECT.	A-14073
C33	30 MFD. 300V. ELECT.	A-14072
C34	& C35 NO. 1 I.F. TRIMMERS	A-14404
C34	& C35 NO. 2 I.F. TRIMMERS	A-14399
C36	1 MFD. 400V.	C-720-81

R1	56,000 Ω .25W.	C-2795-53B
R2	1 MEGOHM .25W.	C-2795-98B
R3	10,000 Ω 1W.	C-2797-74A
R4	1 MEGOHM .25W.	C-2795-98B
R5	30,000 Ω .5W.	C-2796-184A
R6	100,000 Ω .25W.	C-2795-25B
R7	22,000 Ω .5W.	C-2796-78C
R8	56,000 Ω .25W.	C-2795-93B
R9	470,000 Ω .25W.	C-2795-94B
R10	27,000 Ω 1W.	C-2797-79A
R11	22,000 Ω 2W.	C-2798-78A
R12	200 Ω 2W.	C-2798-142A
R13	8 Ω .25W.	B-7103-6
R14	1 MEGOHM TONE CONTROL	A-12987-A
R15	250,000 Ω VOLUME CONTROL	A-14075-A
R16	1 MEGOHM .25W.	C-2795-98B
R17	560,000 Ω .25W.	C-2795-95B
R18	270,000 Ω .25W.	C-2795-91B
R19	36 Ω .25W.	C-2795-124B
R20	270,000 Ω .25W.	C-2795-91B
R21	270,000 Ω .25W.	C-2795-91B
R22	100,000 Ω .25W.	C-2795-25B
R23	66,000 Ω .25W.	C-2795-24B

L1	NO. 1 I.F. TRANS.	A-12084-12
L2	NO. 2 I.F. TRANS.	A-12064-17
L3	B.C. OSC. COIL	A-14241-1P
L4	POL. OSC. COIL	A-14241-2P
L5	S.W. OSC. COIL	A-14241-3
L6	B.C. DET. COIL	A-14242-6P
L7	POL. DET. COIL	A-14242-2P
L8	S.W. DET. COIL	A-14242-3
L9	B.C. ANT. COIL	A-14243-1P
L10	POL. ANT. COIL	A-14243-2P
L11	S.W. ANT. COIL	A-14243-3

NO. FROM BACK OF SET

S1	ANT. PRI. SECTION
S2	ANT. SEC. SECTION
S3	DET. PRI. SECTION
S4	DET. SEC. SECTION
S5	OSC. PLATE SECTION
S6	OSC. GRID SECTION

Sparton Superheterodyne Models

768 778
768-X 778-X

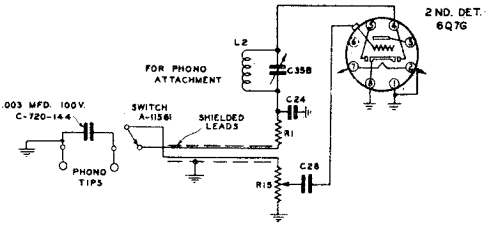

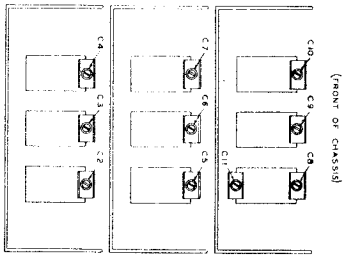

VOLTAGE CHART

Line Voltage: 115 volts

Position of Volume Control: Full with Antenna Disconnected

Tube	Function	Voltage of Socket Prongs to Gnd. (See Prong Nos. on Schematic Diagram)								
		No. 1	No. 2	No. 3	No. 4	No. 5	No. 6	No. 7	No. 8	Grid Cap
6K7G	R.F.	0	0	250	100	0	-	6.1*	0	-1.
6A8G	1st Det. Osc.	0	0	250	109	-24	148	6.1*	0	-.2
6K7G	1st I.F.	0	0	250	100	0	-	6.1*	0	-.2
6Q7G	2nd Det. AVC - 1st Audio	0	0	49	-.2	-.2	-	6.1*	0	-.2
6F6G	P.A.	0	0	240	250	-.4	-	6.1*	0	-
5Y3	Rect.	0	330*	-	340*	-	340*	-	330*	-
6E5	Viso-Glo	6	1.9	-2.2	250	-3.3	0	-	-	-

Notes: Voltage readings are for schematic diagram. Allow 15% + or - on all measurements. Always use meter scale which will give greatest deflection within scale limits. All DC measurements made with 1000 ohms per volt voltmeter. All AC voltages made with rectifier type voltmeter. Unless designated otherwise, voltages in table are + DC voltages.
*AC volts.

MODELS 968,968X
Schematic,Parts
Socket,Trimmers

SPARKS WITHINGTON CO.

(Original) Effective Jan. 2, 1938

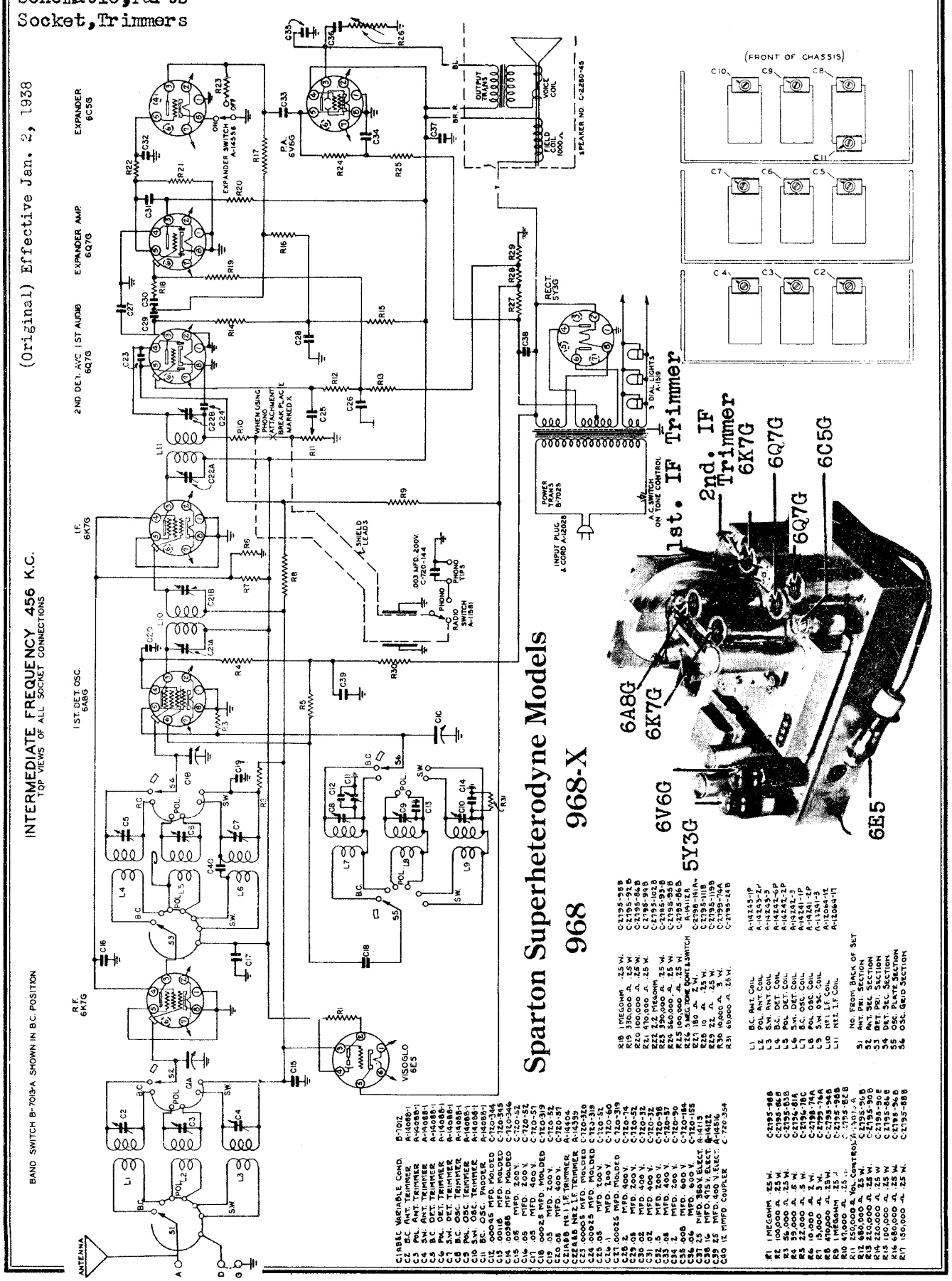

Sparton Superheterodyne Models

968 968-X

C1	B.C. ANT. TRIMMER	A-14088-1	
C2	POL. ANT. TRIMMER	A-14088-1	
C3	POL. ANT. TRIMMER	A-14088-1	
C4	SW. ANT. TRIMMER	A-14088-1	
C5	B.C. DET. TRIMMER	A-14088-1	
C6	POL. DET. TRIMMER	A-14088-1	
C7	SW. DET. TRIMMER	A-14088-1	
C8	B.C. OSC. TRIMMER	A-14088-1	
C9	POL. OSC. TRIMMER	A-14088-1	
C10	SW. OSC. TRIMMER	A-14088-1	
C11	B.C. OSC. PADDER	A-14088-1	
C12	.00045 MFD. MOLDED	C-720-344	
C13	.00118 MFD. MOLDED	C-720-345	
C14	.00388 MFD. MOLDED	C-720-346	
C15	.1 MFD. 200 V.	C-720-52	
C16	.05 MFD. 400 V.	C-720-57	
C17	.05 MFD. 400 V.	C-720-57	
C18	.00025 MFD. MOLDED	C-720-319	
C19	.05 MFD. 200 V.	C-720-52	
C20	.05 MFD. 400 V.	C-720-57	
C21A&B	1st I.F. TRIMMER	A-14088-1	
C22A&B	1st I.F. TRIMMER	A-14339	
C23	.00005 MFD. MOLDED	C-720-320	
C24	.00025 MFD. MOLDED	C-720-319	
C25	.05 MFD. 200 V.	C-720-52	
C26	.1 MFD. 200 V.	C-720-60	
C27	.00025 MFD. MOLDED	C-720-319	
C28	.25 MFD. 200 V.	C-720-74	
C29	.05 MFD. 200 V.	C-720-52	
C30	.02 MFD. 400 V.	C-720-32	
C31	.02 MFD. 400 V.	C-720-32	
C32	.5 MFD. 200 V.	C-720-98	
C33	.05 MFD. 200 V.	C-720-52	
C34	.1 MFD. 200 V.	C-720-90	
C35	.008 MFD. 600 V.	C-720-184	
C36	.06 MFD. 600 V.	C-720-155	
C37	.25 MFD. 350V. ELECT.	A-14113	
C38	.1 MFD. 450 V. ELECT.	A-14112	
C39	.05 MFD. 400 V. ELEC.	A-14055	
C40	11 MMFD. COUPLER	C-720-354	

R1	1 MEGOHM .25 W.	C-2195-98B	
R2	100,000Δ .25 W.	C-2195-96B	
R3	1 MEGOHM .25 W.	C-2195-98B	
R4	39,000Δ .25 W.	C-2195-81B	
R5	22,000Δ .5 W.	C-2196-78C	
R6	10,000Δ 2 W.	C-2198-74A	
R7	15,000Δ 3 W.	C-2799-16A	
R8	470,000Δ .25 W.	C-2198-94B	
R9	1 MEGOHM .25 W.	C-2195-98B	
R10	47,000Δ .25 W.	C-2195-88B	
R11	250,000Δ Vol. Control	A-14131-A	
R12	680,000Δ .25 W.	C-2195-96B	
R13	220,000Δ .25 W.	C-2195-90B	
R14	220,000Δ .25 W.	C-2195-90B	
R15	1 MEGOHM .25 W.	C-2195-98B	
R16	680,000Δ .25 W.	C-2195-96B	
R17	150,000Δ .25 W.	C-2195-88B	
R18	1 MEGOHM .25 W.	C-2195-98B	
R19	330,000Δ .25 W.	C-2195-92B	
R20	100,000Δ .25 W.	C-2195-90B	
R21	1 MEGOHM .25 W.	C-2195-98B	
R22	390,000Δ .25 W.	C-2195-94B	
R23	560,000Δ .25 W.	C-2195-95B	
R24	100,000Δ .25 W.	C-2195-90B	
R25	MEG. POT. & SWITCH	A-14141-A	
R26	10Δ .25 W.	C-2195-1118	
R27	22Δ .25 W.	C-2195-1198	
R28	10,000Δ 3 W.	C-2799-74A	
R29	68,000Δ .25 W.	C-2195-124B	

L1	B.C. ANT. COIL	A-14243-1P	
L2	POL. ANT. COIL	A-14243-2P	
L3	S.W. ANT. COIL	A-14243-3	
L4	B.C. DET. COIL	A-14242-1P	
L5	POL. DET. COIL	A-14242-2P	
L6	S.W. DET. COIL	A-14242-3	
L7	B.C. OSC. COIL	A-14241-1P	
L8	POL. OSC. COIL	A-14241-2P	
L9	S.W. OSC. COIL	A-11241-3	
L10	1ST I.F. COIL	A-14244-1C	
L11	1ST I.F. COIL	A-11064-11	

S1	NO. FROM BACK OF SET	
S2	ANT. PRI. SECTION	
S3	ANT. SEC. SECTION	
S4	DET. PRI. SECTION	
S5	DET. SEC. SECTION	
S6	OSC. PLATE SECTION	
S7	OSC. GRID SECTION	

©John F. Rider, Publisher

MODELS 1068,1068X,1078 1078X SPARKS WITHINGTON CO. MODELS 968,968X

Socket,Trimmers,Alignment — Voltage,Alignment

MODEL 968, 968-X. VOLTAGE CHART

Line Voltage: 115 volts — Position of Volume Control: Full with Antenna Disconnected

Tube	Function	Voltage of Socket Prongs to Gnd.(See Prong Nos. on Schematic Diagram)								
		No. 1	No. 2	No. 3	No. 4	No. 5	No. 6	No. 7*	No. 8	Grid Cap
6K7G	R.F.	0	0	≥90	95	0	-	6	0	-
6A8G	Converter	0	0	290	78	-34	150	6	0	-.1
6K7G	I.F.	0	0	290	90	0	-	6	0	-2
6Q7G	2nd Det. A.V.C.	0	0	105	-.1	0	-.1	6	0	-.1
6Q7G	Expander Amp.	0	0	175	0	0	-	6	0	-.5
6C5G	Expander	0	0	6	0	.1	2	6	0	-
6V6G	P.A.	0	0	270	300	.5	10	6	0	-
5Y3G	Rect.	0	370*	-	380*	-	380*	0	370*	-
6E5	Viso-Glo	0	50	-.2	280	-3	6	-	-	-

Notes: Voltage readings are for schematic diagram on back of sheet. Allow 15% + or - on all measurements. Always use meter scale which will give greatest deflection within scale limits. All DC measurements made with 1000 ohms per volt voltmeter. All AC voltages made with rectifier type voltmeter. Unless designated otherwise, voltages in table are + DC voltages.
*AC volts.

ALIGNMENT With expander - off (see note)

OPERATION	ALIGNMENT OF	GENERATOR CONNECTED TO	DUMMY ANTENNA	GENERATOR FREQUENCY	BAND SWITCH SETTING	TUNING COND. SETTING	TRIMMER	REMARKS
1	I.F.	Conv. Grid	.1 mf.	456	BC	Open	C21A C21B	1st I.F.
							C22A C22B	2nd I.F.
2	Broadcast Band	Ant.	200 mmf.	1500	BC	1500	C8 Osc.	
							C5 RF	
							C2 Ant.	
3		Ant.	200 mmf.	600	BC	600	C11 Pad	
4	(Repeat operation 2)							
5	(Check calibration and sensitivity at 600 KC, 900 KC and 1500 KC)							
6	1st short wave band	Ant.	100 ohm 200 mmf. series	6 MC.	1st S.W.	6 MC.	C9 Osc.	
							C6 RF	
							C3 Ant.	
7	(Check calibration and Sensitivity at 6 MC. and 1.95 MC.)							
8	2nd short wave band	Ant.	100 ohm 200 mmf. series	18 MC.	2nd S.W.	18 MC.	C10 Osc.	
							C7 RF	
							C4 Ant.	
9	(Check calibration and sensitivity at 6 MC. and 18 MC.)							
10	(Check operations 1 to 9 inclusive)							

NOTE: Check to see that dial pointer is parallel to horizontal lines on dial when variable condenser rotor plates are fully meshed with stator plates.

SPARTON SUPERHETERODYNE MODELS
1068 1078
1068-X 1078-X

TRIMMER LOCATIONS
(under chassis)

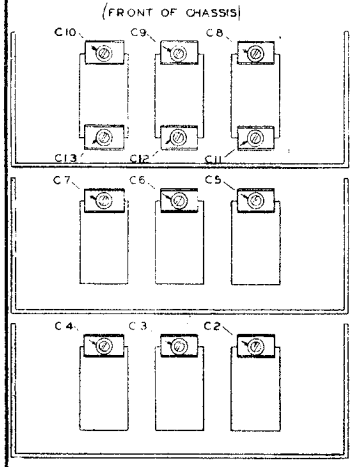

SPARTON SUPERHETERODYNE MODEL 1068,1078,1068X & 1078X

ALIGNMENT (see note)

Viso-Glo tube in socket
AFC Switch "OFF"

OPERATION	ALIGNMENT OF	GENERATOR CONNECTED TO	DUMMY ANTENNA	GENERATOR FREQUENCY	BAND SWITCH SETTING	TUNING COND. SETTING	TRIMMER	REMARKS
1	I.F.	Conv. Grid	.1 mf.	456	BC	Open	C47 A,B	1st I.F. Trans.
							C48 A,B	2nd I.F. Trans.
							C48 A	3rd I.F. (Pri.)
2	Discrim.	Conv. Grid	.1 mf.	456	BC	Open	C49 B	Adjust to minimum
3	Broadcast Band	Ant.	200 mmf.	1500	BC	1500	C8 Osc.	
							C5 RF	
							C2 Ant.	
4		Ant.	200 mmf.	600	BC	600	C11 Pad	
5	(Repeat operation 3)							
6	(Check calibration and sensitivity 1500 KC, 900 KC and 600 KC) *							
7	1st Short Wave	Ant.	100 ohm 200 mmf. series	6 MC.	1st S.W.	6 MC.	C9 Osc.	
							C6 RF	
							C5 Ant.	
8		Ant.	200 mmf.	1.95 MC.	1st S.W.	1.95 MC.	C12 Pad	
9	(Repeat operation 7)							
10	(Check calibration and sensitivity at 6 MC. and 1.95 MC.)							
11	2nd Short-Wave Band	Ant.	100 ohm 200 mmf. series	18 MC.	2nd S.W.	18 MC.	C10 Osc.	Rock dial slightly while adjusting
							C7 R.F.	
							C4 Ant.	
		Ant.		6 MC.	2nd S.W.	6 MC.	C13 Pad	
12	(Repeat operation 11)							
13	(Check calibration and sensitivity at 18 MC. and 6 MC.)							
14	(Check operations 1 to 14 inclusive)							

* Check AFC by connecting generator to converter grid cap and tuning generator and receiver to 1500 KC. Note output meter reading with AFC switch "off". Switch AFC "on" and if output changes appreciably, touch up discriminator trimmer until there is no change in sensitivity.

NOTE: Check to see that dial pointer is parallel to horizontal lines on dial when variable condenser rotor plates are fully meshed with stator plates.

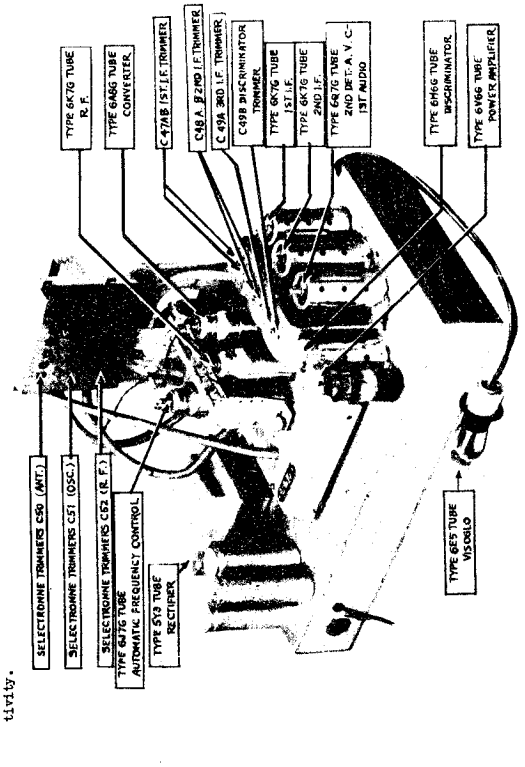

©John F. Rider, Publisher

MODELS 1068,1068X,1078,1078X
Schematic,Parts,Voltage

SPARKS WITHINGTON CO.

Voltage readings are for schematic diagram Allow 15% + or - on all measurements.
Always use meter scale which will give greatest deflection within scale limits. All DC measurements made with 1000 ohms per volt voltmeter. All AC voltages made with rectifier type voltmeter.
Unless designated otherwise, voltages in table are + DC voltages.
*AC volts.

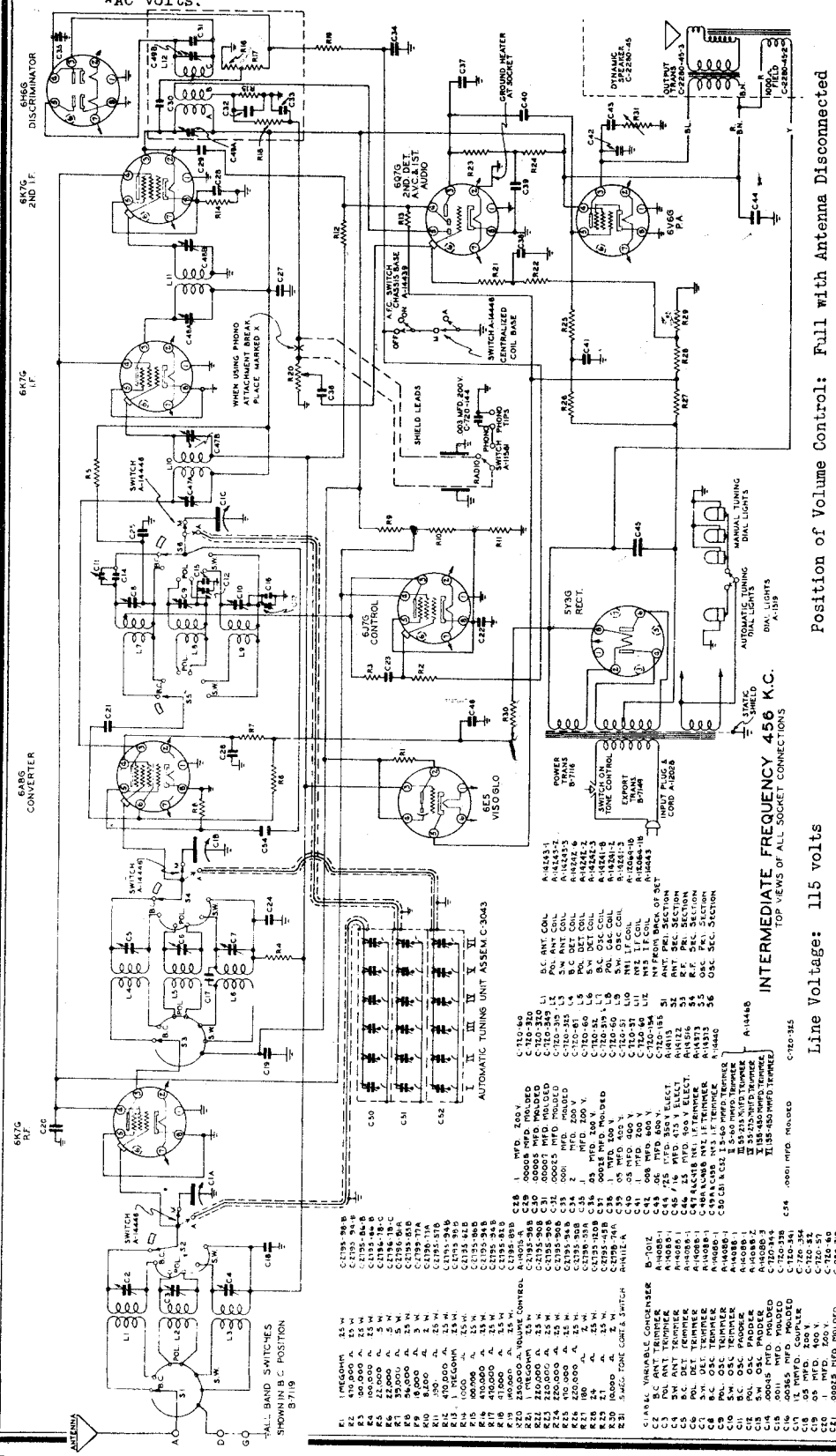

Position of Volume Control: Full with Antenna Disconnected

Line Voltage: 115 volts

VOLTAGE CHART

Tube	Function	Voltage of Socket Prongs to Gnd.(See Prong Nos. on Schematic Diagram)								
		No. 1	No. 2	No. 3	No. 4	No. 5	No. 6	No. 7*	No. 8	Grid Cap
6K7G	R.F.	0	0	300	75	0	-	6.3	0	-.2
6A8G	Converter	0	0	300	91	-5.5	135	6.3	0	-.2
6K7G	I.F.	0	0	300	75	0	-	6.3	0	-2.6
6K7G	2nd I.F.	0	0	300	75	4	-	6.3	4.1	0
6H6G	Discriminator	0	0	.5	0	.5	-	6.3	0	-
6J7G	A.F.C.	0	0	300	85	4.5	-	6.3	4.4	0
6G7G	2nd Det. AVC-1st audio	0	0	100	-.2	-.1	-	6.3	0	0
6V6G	P.A.	0	0	275	290	.5	.6	6.3	0	-
5Y3G	Rect.	-	350*	-	350*	-	350*	-	350*	-
6E5	Viso-Glo	6.3	50	-3	280	-4	0	-	-	-

Sparton Superheterodyne Models

1068 1078
1068-X 1078-X

(Original) Effective Jan. 2, 1938

©John F. Rider, Publisher

©John F. Rider, Publisher

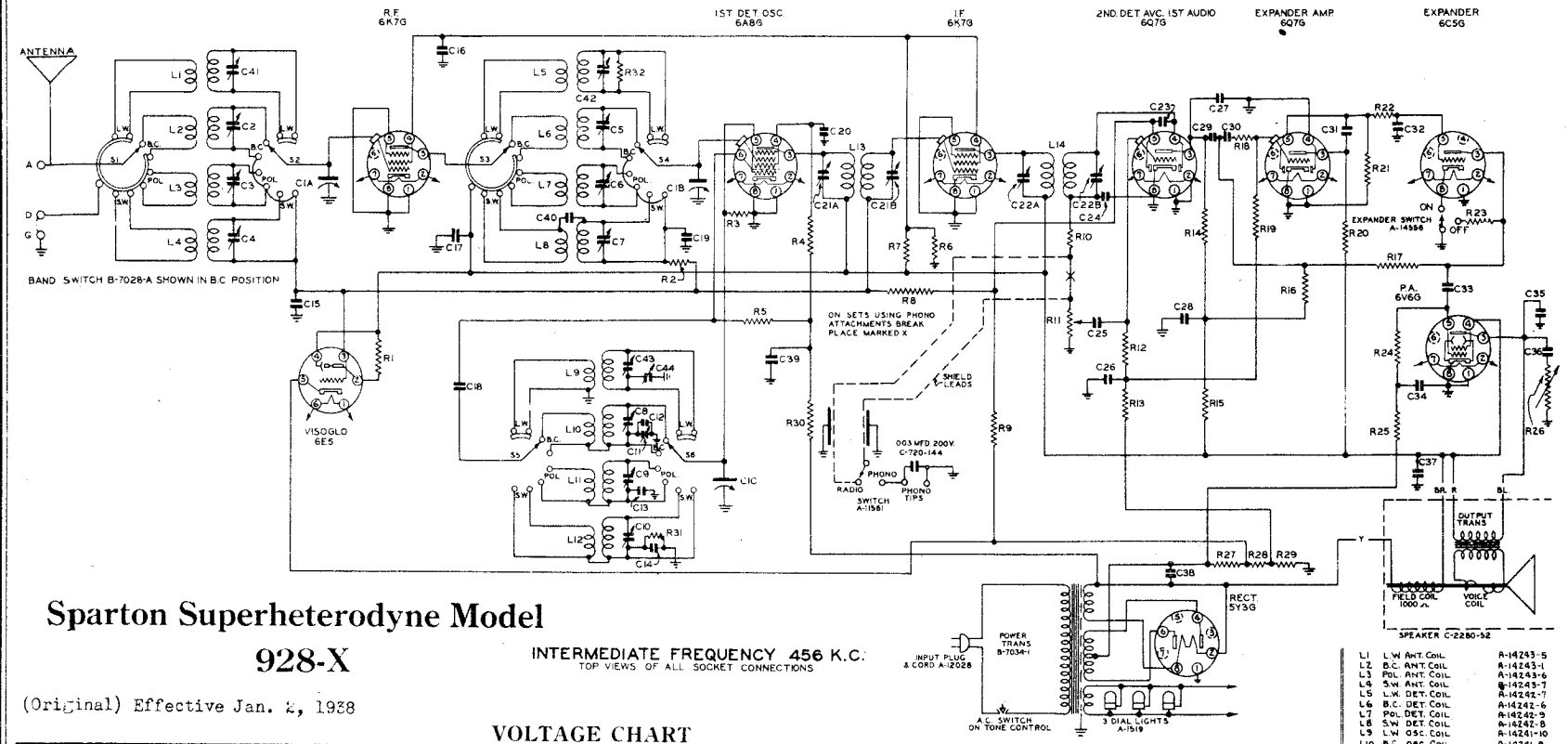

Sparton Superheterodyne Model 928-X

(Original) Effective Jan. 2, 1938

INTERMEDIATE FREQUENCY 456 K.C.
TOP VIEWS OF ALL SOCKET CONNECTIONS

VOLTAGE CHART

Line Voltage: 115 volts — Position of Volume Control: Full with Antenna Disconnected

Tube	Function	Voltage of Socket Prongs to Gnd. (See Prong Nos. on Schematic Diagram)								
		No. 1	No. 2	No. 3	No. 4	No. 5	No. 6	No. 7*	No. 8	Grid Cap
6K7G	R.F.	0	0	290	95	0	-	6	0	-2
6A8G	Converter	0	0	290	78	-34	150	6	0	-.1
6K7G	I.F.	0	0	290	90	0	-	6	0	-2
6Q7G	2nd Det. A.V.C.	0	0	105	-.1	0	-.1	6	0	-.1
6Q7G	Expander Amp.	0	0	175	0	0	-	6	0	-.5
6C5G	Expander	0	0	6	0	.1	2	6	0	-
6V6G	P.A.	0	0	270	300	.5	10	6	0	-
5Y3G	Rect.	0	370*	-	380*	-	380*	0	370*	-
6E5	Viso-Glo	0	50	-.2	280	-3	6	-	-	-

Notes: Voltage readings are for schematic diagram. Allow 15% + or - on all measurements. Always use meter scale which will give greatest deflection within scale limits. All DC measurements made with 1000 ohms per volt voltmeter. All AC voltages made with rectifier type voltmeter. Unless designated otherwise, voltages in table are + DC voltages.
*AC volts.

C1A&B&C	Variable Cond.	B-7012
C2	B.C. Ant. Trimmer	A-14088-1
C3	Pol. Ant. Trimmer	A-14088-1
C4	S.W. Ant. Trimmer	A-14088-1
C5	B.C. Det. Trimmer	A-14088-1
C6	Pol. Det. Trimmer	A-14088-1
C7	S.W. Det. Trimmer	A-14088-1
C8	B.C. Osc. Trimmer	A-14088-1
C9	Pol. Osc. Trimmer	A-14088-1
C10	S.W. Osc. Trimmer	A-14088-1
C11	B.C. Osc. Padder	A-14088-1
C12	.00045 Mfd. Molded	C-720-344
C15	.00111 Mfd. Molded	C-720-352
C14	.00361 Mfd. Molded	C-720-353
C15	.05 Mfd. 200 V.	C-720-52
C16	.05 Mfd. 200 V.	C-720-52
C17	.05 Mfd. 400 V.	C-720-57
C18	.00015 Mfd. Molded	C-720-319
C19	.05 Mfd. 200 V.	C-720-52
C20	.05 Mfd. 400 V.	C-720-57
C21A&B	No. 1 I.F. Trimmer	A-14404
C22A&B	No. 2 I.F. Trimmer	A-14389
C23	.00005 Mfd. Molded	C-720-320
C24	.00025 Mfd. Molded	C-720-319
C25	.05 Mfd. 200 V.	C-720-52
C26	.1 Mfd. 200 V.	C-720-60
C27	.00025 Mfd. Molded	C-720-319
C28	.2 Mfd. 400 V.	C-720-74
C29	.05 Mfd. 200 V.	C-720-52
C30	.01 Mfd. 400 V.	C-720-32
C31	.02 Mfd. 400 V.	C-720-32
C32	.5 Mfd. 200 V.	C-720-98
C33	.05 Mfd. 400 V.	C-720-57
C34	.2 Mfd. 200 V.	C-720-90
C35	.008 Mfd. 600 V.	C-720-154
C36	.06 Mfd. 600 V.	C-720-155
C37	25 Mfd. 350 V. Elect.	A-14113
C38	16 Mfd. 475 V. Elect.	A-14122
C39	25 Mfd. 400 V. Elect.	A-14516
C40	12 Mmfd. Coupler	C-720-354
C41	L.W. Ant. Trimmer	A-14088-1
C42	L.W. Det. Trimmer	A-14088-1
C43	L.W. Osc. Trimmer	A-14088-1
C44	L.W. Osc. Padder	A-14088-3

L1	L.W. Ant. Coil	A-14243-5
L2	B.C. Ant. Coil	A-14243-1
L3	Pol. Ant. Coil	A-14243-6
L4	S.W. Ant. Coil	A-14243-7
L5	L.W. Det. Coil	A-14242-7
L6	B.C. Det. Coil	A-14242-6
L7	Pol. Det. Coil	A-14242-9
L8	S.W. Det. Coil	A-14242-8
L9	L.W. Osc. Coil	A-14241-10
L10	B.C. Osc. Coil	A-14241-9
L11	Pol. Osc. Coil	A-14241-11
L12	S.W. Osc. Coil	A-14241-12
L13	No. 1 I.F. Coil	A-12064-12
L14	No. 2 I.F. Coil	A-12064-17

No. From Back of Set

S1	Ant. Pri. Section
S2	Ant. Sec. Section
S3	Det. Pri. Section
S4	Det. Sec. Section
S5	Osc. Pri. Section
S6	Osc. Sec. Section

R1	1 Megohm .25 W.	C-2195-98B
R2	100,000 Ω .25 W.	C-2195-86B
R3	56,000 Ω .25 W.	C-2195-85B
R4	39,000 Ω .5 W.	C-2196-81A
R5	22,000 Ω .5 W.	C-2196-78C
R6	10,000 Ω 2 W.	C-2198-74A
R7	15,000 Ω 3 W.	C-2199-76A
R8	470,000 Ω .25 W.	C-2195-94B
R9	1 Megohm .25 W.	C-2198-98B
R10	47,000 Ω .25 W.	C-2195-82B
R11	250,000 Ω Vol. Control	A-14013-A
R12	680,000 Ω .25 W.	C-2195-96B
R13	220,000 Ω .25 W.	C-2195-90B
R14	220,000 Ω .25 W.	C-2196-90B
R15	100,000 Ω .25 W.	C-2195-86B
R16	680,000 Ω .25 W.	C-2195-96B
R17	150,000 Ω .25 W.	C-2195-88B
R18	1 Megohm .25 W.	C-2195-98B
R19	330,000 Ω .25 W.	C-2195-92B
R20	100,000 Ω .25 W.	C-2195-86B
R21	470,000 Ω .25 W.	C-2195-94B
R22	2.2 Megohm	C-2195-102B
R23	390,000 Ω .25 W.	C-2195-93B
R24	560,000 Ω .25 W.	C-2195-95B
R25	100,000 Ω .25 W.	C-2195-86B
R26	.5 Meg. Tone Cont. & Switch	A-14112-A
R27	150 Ω 2 W.	C-2195-14IA
R28	10 Ω .25 W.	C-2195-111B
R29	22 Ω .25 W.	C-2195-119B
R30	10,800 Ω 3 W.	C-2199-74A
R31	68,000 Ω .25 W.	C-2195-74B
R32	100,000 Ω .25 W.	C-2195-86B

MODEL 678A
Selectronne Adjustments

MODEL 928X
Socket, Trimmers, Alignment

SPARKS WITHINGTON CO.

MODEL 928-X

ALIGNMENT (see note)

OPERATION	ALIGNMENT OF	GENERATOR CONNECTED TO	DUMMY ANTENNA	GENERATOR FREQUENCY	BAND SWITCH SETTING	TUNING COND. SETTING	TRIMMER	REMARKS
1	I.F.	Conv. Grid	.1 mf.	456	BC	Open	C34A C34B	1st I.F. Trans.
							C35A C35B	2nd I.F. Trans.
2	Broadcast Band	Ant.	200 mmf.	1500	BC	1500	C8 Osc.	
							C5 RF	
							C2 Ant.	
3		Ant.	200 mmf.	600	BC	600	C11 Pad	
4	(Repeat operation 2)							
5	Long-Wave Band	Ant.	200 mmf.	400	L.W.	400	C39 Osc.	
							C38 R.F.	
							C37 Ant.	
6		Ant.	200 mmf.	150	L.W.	150	C40 Pad	
7	(Repeat operation 5)							
8	(Check calibration and sensitivity at 400 KC and 150 KC)							
9	1st short wave band	Ant.	100 ohm 200 mmf. series	7 MC.	1st S.W.	7 MC.	C9 Osc.	
							C6 RF	
							C5 Ant.	
10	(Check calibration and sensitivity at 7 MC and 2.5 MC)							
11	2nd short-wave band	Ant.	100 ohm 200 mmf. series	21 MC.	2nd S.W.	21 MC.	C10 Osc.	
							C7 RF	
							C4 Ant.	
12	(Check calibration and sensitivity at 8 MC. and 21 MC.)							
13	(Check operations 1 to 12 inclusive)							

NOTE: Check to see that dial pointer is parallel to horizontal lines on dial when variable condenser rotor plates are fully meshed with stator plates.

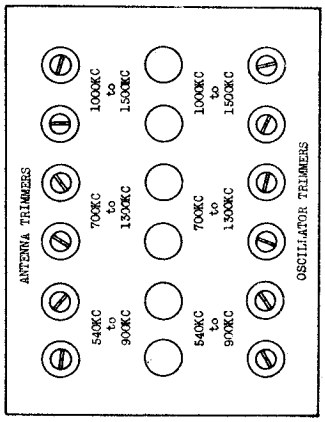

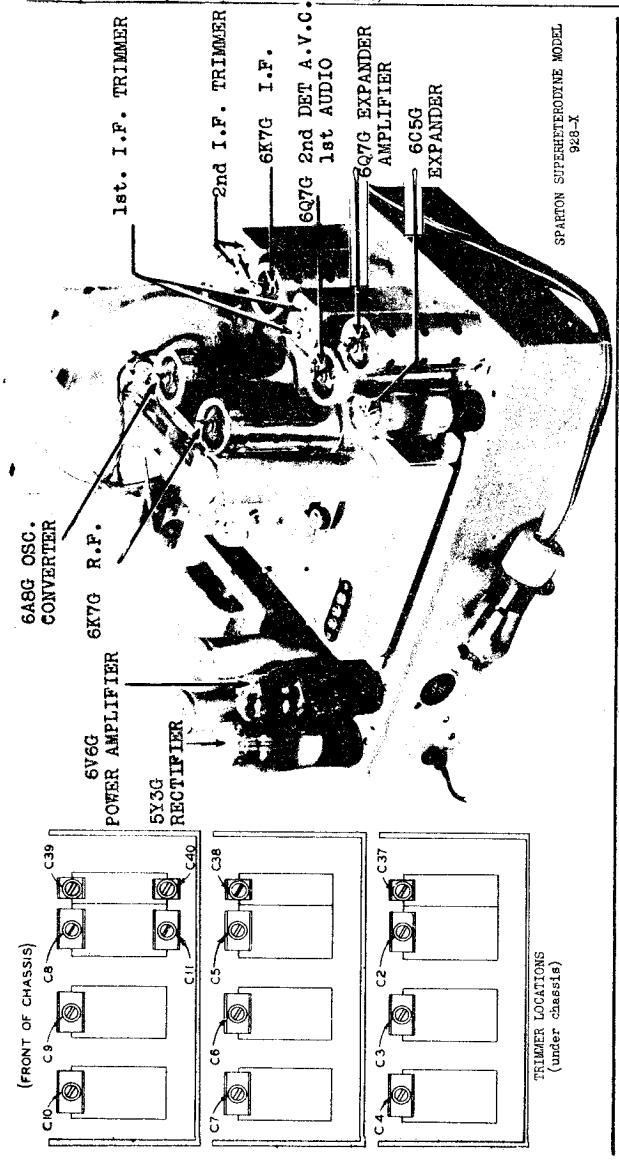

HOW TO ADJUST THE SPARTON SELECTRONNE IN THE MODEL 678-A

WARNING: All final adjustments of the Selectronne trimmers should be made in the customer's home, with the receiver connected to the regular antenna system with which it will be used.

1. Select six favorite nearby Broadcast Stations and detach the corresponding call letter tabs from the station call letter tab sheets.

2. Remove the Selectronne escutcheon plate from the front of the cabinet by means of the two screws. This exposes the steel plate with the slots for holding the station call letter tabs.

3. The six buttons of the Selectronne are arranged in three groups according to frequency limits - 540 to 900 kc., 700 to 1300 kc. and 1000 to 1500 kc. (See illustration also back cover of Selectronne box). The six tabs corresponding to the six broadcast stations which have been chosen must be arranged in the steel plate so that the frequency (kilocycle) of each station will be included in the frequency limits of the proper group.

For example: A station having a frequency of 610 kc. should be placed in the 540 to 900 kc. group; a station at 950 should be placed in the 700 to 1300 kc. group, etc.

Note: Each group has considerable overlap to allow for the selection of six stations which may have frequency allocations comparatively close together.

4. Adjust Selectronne trimmers for each one of the six stations as follows:

(A) Two trimmers are provided for each one of the six stations. They are reached through the two holes arranged in rows one above the other in the back cover of the Selectronne.

(B) Tune in the station in the usual way using manual tuning, watching the Viso-Glo so that the station will be perfectly "tuned in".

(C) Turn the "manual-automatic" switch knob to the "automatic" position.

(D) Push in the Selectronne button which corresponds to the station just tuned in.

(E) Now from the back of the cabinet, with an ordinary screw-driver adjust the oscillator trimmer (bottom hole) in the row corresponding to the proper station, until the same station that was tuned in manually is heard. This station may be heard faintly until the remaining trimmer has been adjusted.

It is important that the same station is heard with this adjustment and not some other network station carrying the same program. Screw this trimmer to the right or left until the station is loudest.

Care should be taken in turning the adjusting screws so that they will not become disengaged from the trimmers by being turned out too far.

(F) In the same manner adjust first the antenna trimmer (top hole) to this same station.

Note: Perfect adjustment of these trimmers is easily obtained by removing the Viso-Glo tube and socket from its clamp and turning the tube toward the back of the cabinet so that every adjustment of the trimmers may be watched in the Viso-Glo. Perfect adjustment is obtained when further turning of the trimmers will not result in any smaller shaded area between the green light sections of the Viso-Glo.

(G) Re-adjust the oscillator trimmer (bottom hole) while watching the Viso-Glo to see if the shaded area can be made smaller.

(H) Check the above adjustments by turning the "manual-automatic" switch to the "manual" position and without touching the manual tuning controls, observe if the Viso-Glo shows any difference in the amount of shaded area in the tube as compared to the shaded area with the switch knob in the "automatic" position. If the shaded area is larger with the switch in the "automatic" position, re-adjust the Selectronne trimmers until the shaded area is equal to that obtained with the switch knob in the "manual" position.

5. Repeat the procedure in paragraph 4 for each of the six stations.

6. When all trimmers have been properly adjusted, replace Viso-Glo tube and socket in clamp, and attach Selectronne escutcheon plate to front of cabinet.

7. Any of the six stations to which the SPARTON Selectronne has been adjusted, may now be instantly received simply by pushing the Selectronne button for the desired station with the switch knob in the automatic position.

Note: In case all six of the buttons should become depressed through improper manipulation of the Selectronne, simply reach into the Selectronne box (from the back of the cabinet) and apply a slight pressure of the fingers under the latching bar which runs across the frame work in front of the trimmer box. This will immediately release all buttons.

©John F. Rider, Publisher

MODEL 977
Schematic, Parts
Socket, Trimmers

SPARKS WITHINGTON CO.

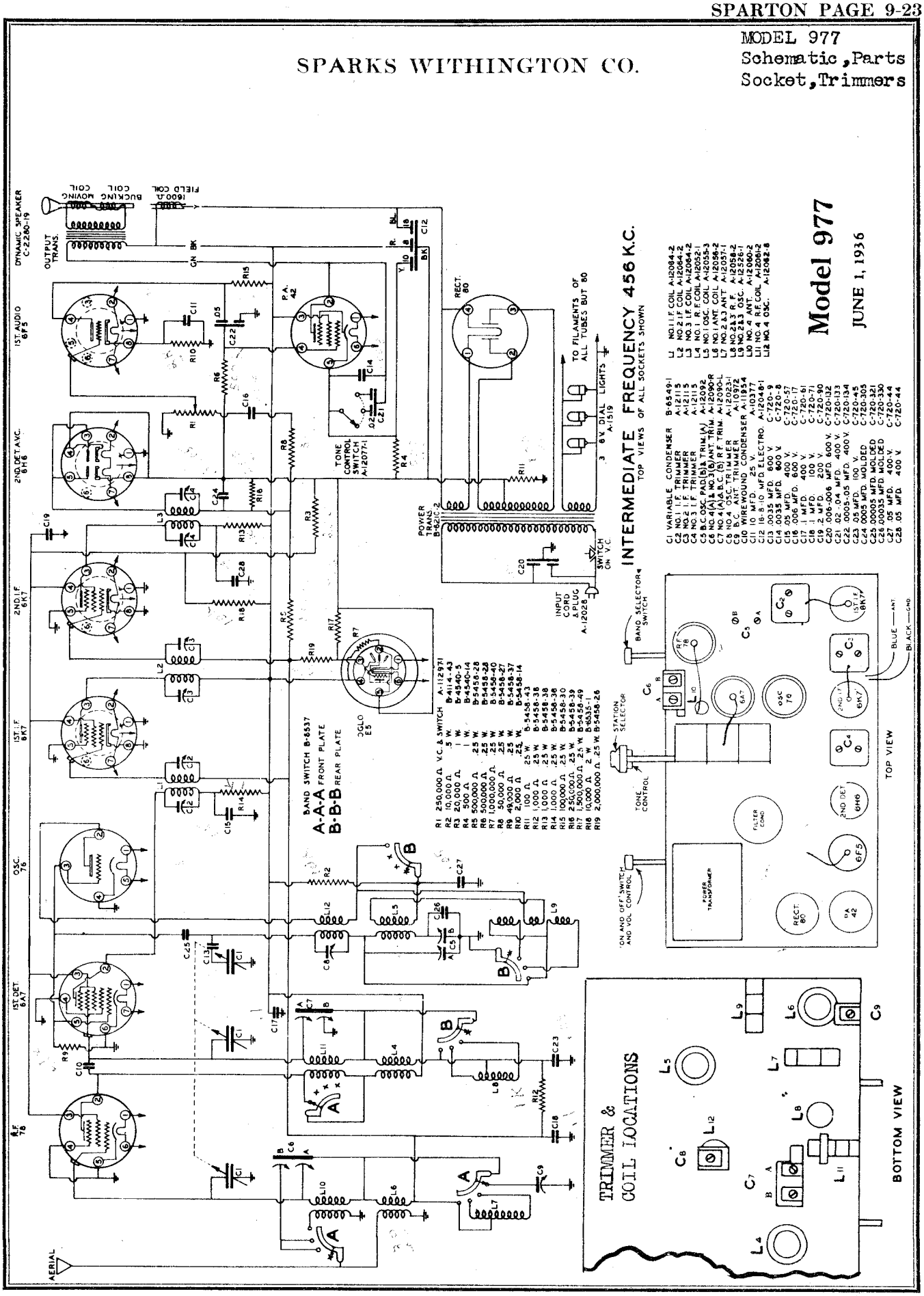

©John F. Rider, Publisher

MODEL 977
Voltage, Resistance
Alignment

SPARKS-WITHINGTON CO.

A. Alignment of Intermediate-Frequency Stages.

(1) Turn on receiver and test oscillator and allow both to operate several minutes before attempting to adjust any condensers.

(2) Turn the band selector switch to the No. 1 (broadcast) position and turn the station selector knob until the rotor plates are completely out of mesh with the stator plates.

(3) Connect "antenna" of test oscillator to grid cap of Type 6A7 1st detector-oscillator tube and "ground" of test oscillator to chassis frame of receiver. Connect output meter "low tap" across voice coil of speaker.

Note: It is advisable to read carefully the operating instructions included with the test oscillator.

(4) Tune test oscillator to obtain a signal of 456 kilocycles.

(5) Turn the volume control of receiver on full and adjust I.F. condensers C4, C3 and C2 which are reached from the top of the chassis. (See Fig 21).

Note: The intermediate frequency circuits are quite selective and care must be taken to insure proper adjustment.

B. Alignment of Broadcast Band.

(1) Disconnect "antenna" lead of test oscillator from grid cap of first detector-oscillator tube and connect in series with a 150 mmf. condenser dummy antenna to the antenna terminal of the chassis.

(2) Tune test oscillator to obtain a signal of 1350 kilocycles.

(3) Turn the station selector of the receiver to 1350 kilocycles and without disturbing the setting of the test oscillator or the station selector, adjust condensers C5A, C7B and C9 in the order given.

(4) Tune test oscillator and receiver to 600 kilocycles and adjust condenser C5B, at the same time the station selector knob is moved back and forth to obtain maximum deflection of the output meter.

(5) Retune test oscillator and receiver to 1350 kilocycles and check the adjustments of condensers C5A, C7B and C9.

(6) Calibration of the broadcast band should also be checked at 900 kilocycles and 600 kilocycles.

C. Alignment of Band No. 4 (6.5 to 20 Megacycles).

(1) Turn the band selector switch to the third short wave band (blue section of the dial).

(2) Disconnect "antenna" lead of test oscillator from antenna terminal, remove the 150 mmf. condenser and replace with a 400 ohm non-inductive resistor dummy antenna and connect to grid cap of Type 78 R.F. tube.

(3) Tune test oscillator and receiver to 16 megacycles and adjust condenser C8 and condenser C7A.

CAUTION: On this band care must be taken to adjust the various condensers to the fundamental of the signal and not to the image. The image signal is equal to the fundamental minus twice the intermediate frequency of the receiver. A set that is adjusted to the image frequency instead of to the fundamental may be detected by tuning over the band and checking the sensitivity at various points. If a dead spot appears near the center of the band, the adjustable condensers for that band have probably been adjusted to the image instead of the fundamental.

This type of mis-alignment may also be detected by tuning the test oscillator to a frequency of 15 megacycles and the station selector to approximately 15,900 kilocycles. If a strong signal is found approximately at this frequency, it indicates that the band has been adjusted to the image frequency. The normal image frequency for 15,000 kilocycles would be 15,000 kilocycles minus twice 456 kilocycles or approximately 14,100 kilocycles. Therefore a signal of this frequency may be found with the test oscillator generating a 15,000 kilocycle signal.

(4) Disconnect the "antenna" of the test oscillator from the grid cap of the Type 78 (Type 6K7 in Model 966) R.F. tube and, using the 400 ohm resistor in series, connect to the antenna terminal.

(5) Adjust condenser C6A. Note: Due to the inter-action between the various circuits, it is necessary to move the station selector knob slightly while adjusting these trimmers in order to realize the maximum possible gain.

(6) Retune the test oscillator and receiver to 9 megacycles and check sensitivity and calibration.

D. Alignment of Band No. 3 (3.2 to 8.0 Megacycles).

(1) Turn the band selector switch to the second short wave band (red section of the dial).

(2) Tune test oscillator and receiver to 7.2 megacycles.

(3) Adjust condenser C6B.

(4) Tune test oscillator and receiver to 3.6 megacycles and check calibration and sensitivity.

E. Alignment of Band No. 2 (1.3 to 3.8 Megacycles).

Note: There are no adjustable condensers for this band. However, it is advisable to check the calibration of the dial and the general operation of the receiver at both 1.7 megacycles and 3 megacycles. CAUTION: All adjustments should be rechecked to assure accuracy and stability of adjustment and calibration.

VOLTAGE-RESISTANCE CHART

Line Voltage: 120 volts

Position of Volume Control: Full with Antenna Disconnected

Position of Band Selector Switch: Broadcast

Tube	Function	Voltage and Resistance of Each Socket Prong to Ground (See Prong Numbers on Schematic Diagram)									
		Measurement	Prong No. 1	Prong No. 2	Prong No. 3	Prong No. 4	Prong No. 5	Prong No. 6	Prong No. 7	Prong No. 8	Grid Cap
78	R-F Amplifier	Volts	*	260	110	0	0	*	-	-	0
		Ohms	0	30000	20000	0	0	0	-	-	750000
6A7	1st. Detector	Volts	*	250	120	0	0	0	*	-	0
		Ohms	0	30000	20000	0	50000	0	0	-	750000
76	Oscillator	Volts	*	260	0	0	*	-	-	-	-
		Ohms	0	40000	50000	0	0	-	-	-	
6K7	1st. I-F Amplifier	Volts	0	*	260	100	0	-	*	0	0
		Ohms	0	0	30000	20000	0	-	0	0	750000
6K7	2nd. I-F Amplifier	Volts	0	*	280	110	0	-	*	0	0
		Ohms	0	0	30000	20000	0	-	0	0	750000
6H6	2nd. Det- A.V.C.	Volts	0	*	0	0	0	-	*	0	-
		Ohms	0	0	300000	0	300000	-	0	100	-
6F5	1st A-F Amplifier	Volts	0	*	-	180	-	-	*	0	0
		Ohms	0	0	-	300000	-	-	0	2000	250000
42	Power Amplifier	Volts	*	310	315	0	0	*	-	-	-
		Ohms	0	30000	30000	500000	600	0	-	-	-
80	Rectifier	Volts	0	380	380	0	-	-	-	-	-
		Ohms	32000	0	0	32000	-	-	-	-	-
6E5	Viso-Glo	Volts	*	50	0	250	0	*	-	-	-
		Ohms	0	1 meg.	1 meg.-	30000	100	0	-	-	-

* Zero or 6 volts depending on twist of heater hook-up wire at sockets.

©John F. Rider, Publisher

©John F. Rider, Publisher

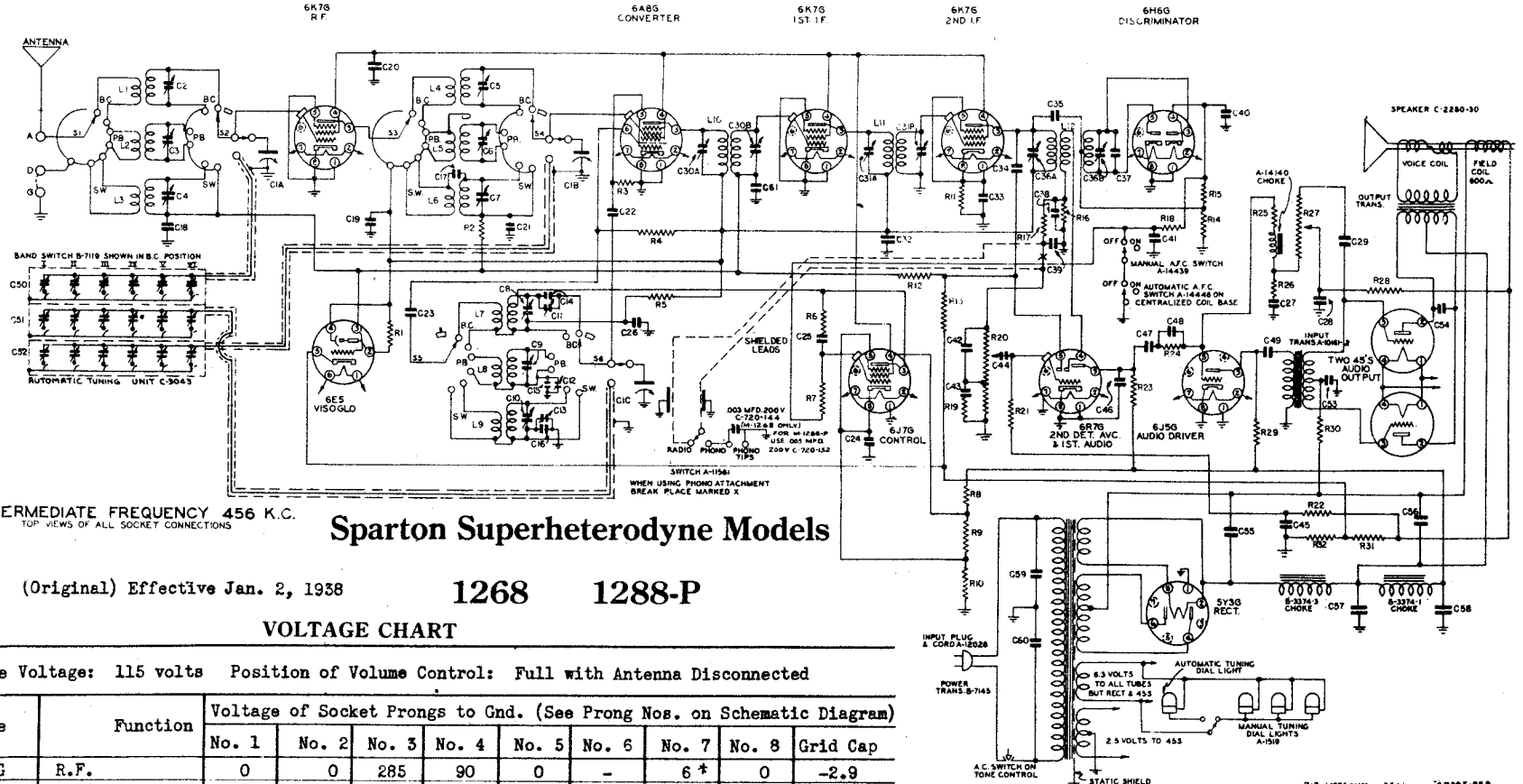

INTERMEDIATE FREQUENCY 456 K.C.
TOP VIEWS OF ALL SOCKET CONNECTIONS

Sparton Superheterodyne Models

(Original) Effective Jan. 2, 1938 **1268** **1288-P**

VOLTAGE CHART

Line Voltage: 115 volts Position of Volume Control: Full with Antenna Disconnected

Tube	Function	Voltage of Socket Prongs to Gnd. (See Prong Nos. on Schematic Diagram)								
		No. 1	No. 2	No. 3	No. 4	No. 5	No. 6	No. 7	No. 8	Grid Cap
6K7G	R.F.	0	0	285	90	0	-	6 *	0	-2.9
6A8G	Converter	0	0	285	90	-2	165	6 *	0	-.1
6J7G	A.F. Control	0	0	255	90	4	0	6 *	4.5	0
6K7G	1st I.F.	0	0	285	90	0	-	6 *	0	-3
6K7G	2nd I.F.	0	0	285	90	40	-	6 *	4	0
6R7G	Det. AVC	0	6.3*	125	-.1	0	-6.5	0	0	0
6H6G	Discriminator	0	6.3*	1	0	.2	0	0	0	-
6J5G	2nd Audio	0	6.3*	165	0	.1	0	0	0	-
45	Power Amp.	1	300	48	1	-	-	-	-	-
45	Power Amp.	1	300	48	1	-	-	-	-	-
5Y3G	Rect.	0	340*	-	375*	-	375*	-	340*	-
6E5	Viso-Glo	0	50	-.2	280	4	6	-	-	-

Voltage readings are for schematic diagram on back of sheet. Allow 15% + or - on all measurements. Always use meter scale which will give greatest deflection within scale limits. All DC measurements made with 1000 ohms per volt voltmeter. All AC voltages made with rectifier type voltmeter. Unless designated otherwise, voltages in table are + DC voltages.
*AC volts.

C1-ABC Variable Condenser B-7012
C2 B.C. Ant. Trimmer A-14088-1
C3 Pol. Ant. Trimmer A-14088-1
C4 S.W. Ant. Trimmer A-14088-1
C5 B.C. Det. Trimmer A-14088-1
C6 Pol. Det. Trimmer A-14088-1
C7 S.W. Det. Trimmer A-14088-1
C8 B.C. Osc. Trimmer A-14088-1
C9 Pol. Osc. Trimmer A-14088-1
C10 S.W. Osc. Trimmer A-14088-1
C11 B.C. Osc. Padder A-14088-1
C12 Pol. Osc. Padder A-14088-2
C13 S.W. Osc. Padder A-14088-3
C14 .00045 Mfd. Molded C-720-344
C15 .001 Mfd. Molded C-720-338
C16 .00345 Mfd. Molded C-720-341
C17 1% Mmfd. Coupler C-729-364
C18 .05 Mfd. 200 V. C-720-52
C19 .08 Mfd. 400 V. C-720-57
C20 .1 Mfd. 200 V. C-720-60
C21 .05 Mfd. 200 V. C-720-52
C22 .0001 Mfd. Molded C-720-326
C23 .00025 Mfd. Molded C-720-319
C24 .1 Mfd. 200 V. C-720-60
C25 .00005 Mfd. Molded C-720-320
C26 .1 Mfd. 200 V. C-720-60
C27 .001 Mfd. 400 V. C-720-156
C28 .1 Mfd. 200 V. C-720-60
C29 .01 Mfd. 400 V. C-720-26
C30A&B Mtl. I.F. Trimmer A-14313
C31 A&B Mtl. I.F. Trimmer A-14313
C32 .2 Mfd. 400 V. C-720-74
C33 .1 Mfd. 200 V. C-720-60
C34 .00005 Mfd. Molded C-720-320
C35 .00005 Mfd. Molded C-720-320
C36 A&B. Mtl. I.F. Trimmer A-14440
C37 .00001 Mfd. Molded C-720-349
C38 .00025 Mfd. Molded C-720-319
C39 .0001 Mfd. Molded C-720-325
C40 .1 Mfd. 200 V. C-720-60
C41 .2 Mfd. 200 V. C-720-57
C42 .01 Mfd. 200 V. C-720-319
C43 .01 Mfd. 200 V. C-720-20
C44 .05 Mfd. 200 V. C-720-52
C45 .1 Mfd. 200 V. C-720-60
C46 .00025 Mfd. Molded C-720-319
C47 .05 Mfd. 400 V. C-720-57
C48 .0005 Mfd. Molded C-720-316
C49 .2 Mfd. 400 V. C-720-74
C50 C51 C52 55-516 Mmfd. Trim. 56-66 Mmfd. Trim. 155-216 Mmfd. Trim. 158-216 Mmfd. Trim. 186-450 Mmfd. Trim. 165-450 Mmfd. Trim. A-14466
C53 .5 Mfd. 200 V. C-720-159
C54 .005 Mfd. 600 V. C-720-347
C55 16 Mfd. 450 V. Elect. A-14013
C56 16 Mfd. 400 V. Elect. A-14138
C57 16 Mfd. 350 V. Elect. A-14139
C58 25 Mfd. 325 V. Elect. A-14184
C59 .006 Mfd. 600 V. C-720-347
C60 .006 Mfd. 600 V. C-720-347
C61 .01 Mfd. 200 V. C-720-20
R1 1 Megohm 1/2 W. C-2195-96
R2 100,000 Ω 2 W. C-2195-86
R3 56,000 Ω .25 W. C-2195-83
R4 22,000 Ω 1 W. C-2196-78
R5 22,000 Ω 1 W. C-2196-78
R6 100,000 Ω .25 W. C-2195-86
R7 470,000 Ω .25 W. C-2195-94
R8 12,000 Ω 3 W. C-2199-15
R9 8200 Ω 1 W. C-2196-74
R10 390 Ω .25 W. C-2195-51
R11 1000 Ω .25 W. C-2195-42
R12 470,000 Ω .25 W. C-2195-94
R13 1 Megohm .25 W. C-2195-98
R14 470,000 Ω .25 W. C-2195-94
R15 470,000 Ω .25 W. C-2195-94
R16 100,000 Ω .25 W. C-2195-86
R17 47,000 Ω .25 W. C-2195-82
R18 180,000 Ω .25 W. C-2195-88
R19 47,000 Ω .25 W. C-2195-82
R20 1 Megohm Vol. Control A-14533
R21 470,000 Ω .25 W. C-2195-94
R22 470,000 Ω .25 W. C-2195-94
R23 68,000 Ω .25 W. C-2195-85
R24 120,000 Ω .25 W. C-2195-87
R25 56,000 Ω .25 W. C-2195-83
R26 100,000 Ω .25 W. C-2195-86
R27 1 Megohm Tone Control A-14547
R28 270,000 Ω .25 W. C-2195-91
R29 27,000 Ω .25 W. C-2195-79
R30 36,000 Ω .25 W. C-2195-81
R31 22 Ω .25 W. C-2195-42
R32 39 Ω .25 W. C-2195-45
L1 B.C. Ant. Coil A-14243-1
L2 Pol. Ant. Coil A-14243-2
L3 S.W. Ant. Coil A-14243-3
L4 B.C. Det. Coil A-14242-6
L5 Pol. Det. Coil A-14242-2
L6 S.W. Det. Coil A-14242-5
L7 B.C. Osc. Coil A-14241-8
L8 Pol. Osc. Coil A-14241-2
L9 S.W. Osc. Coil A-14241-5
L10 1st I.F. Coil A-12064-16
L11 2nd I.F. Coil A-12064-16
L12 3rd I.F. Coil A-14445
No. From Back of Set
S1 Ant. Pri. Section
S2 Ant. Sec. Section
S3 R.F. Pri. Section
S4 R.F. Sec. Section
S5 Osc. Pri. Section
S6 Osc. Sec. Section

MODELS 1268,1288P
Socket,Trimmers
Alignment

SPARKS WITHINGTON CO.

AFC Switch "OFF"
Viso-Glo Tube in Socket

ALIGNMENT (see note)

OPERATION	ALIGNMENT OF	GENERATOR CONNECTED TO	DUMMY ANTENNA	GENERATOR FREQUENCY	BAND SWITCH SETTING	TUNING COND. SETTING	TRIMMER	REMARKS
1	I.F.	Conv. Grid	.1 mf.	456	BC	Open	C30 A,B	1st I.F. Transformer
							C31 A,B	2nd I.F. Transformer
							C36A	3rd I.F. Trans. (Pri.)
2	Discrim.	Conv. Grid	.1 mf.	456	BC	Open	C36B	Adjust for minimum
3	Broadcast Band	Ant.	200 mmf.	1500	BC	1500	C8 Osc.	
							C5 RF	
							C2 Ant.	
4		Ant.	200 mmf.	600	BC	600	C11 Pad	
5	(Repeat operation 3)							
6	(Check calibration and sensitivity at 1500 KC, 900 KC and 600 KC) *							
7	1st Short-Wave Band	Ant.	100 ohm 200 mmf. series	6 MC.	1st S.W.	6 MC.	C9 Osc.	
							C6 RF	
							C3 Ant.	
8		Ant.	200 mmf.	1.95 MC.	1st S.W.	1.95 MC.	C12 Pad	
9	(Repeat operation 7)							
10	(Check calibration and sensitivity at 6 MC and 1.95 MC)							
11	2nd Short Wave Band	Ant.	100 ohm 200 mmf. series	18 MC.	2nd S.W.	18 MC.	C10 Osc.	Rock dial slightly while adjusting
							C7 RF	
							C4 Ant.	
12		Ant.		6 MC.	2nd S.W.	6 MC.	C13 Pad	
13	(Repeat operation 11)							
14	(Check calibration and sensitivity at 18 MC. and 6 MC.)							
15	(Check operations 1 to 14 inclusive)							

* Check AFC by connecting generator to converter grid cap and tuning generator and receiver to 1500 KC. Note output meter reading with AFC switch "off". Switch AFC "on" and if output changes appreciably, touch up discriminator trimmer until there is no change in sensitivity.

NOTE: Check to see that dial pointer is parallel to horizontal lines on dial when variable condenser rotor plates are fully meshed with stator plates.

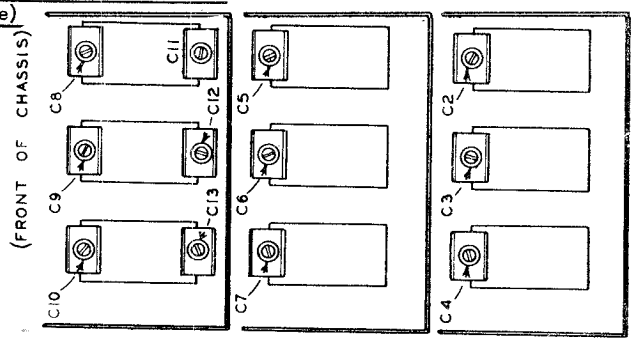

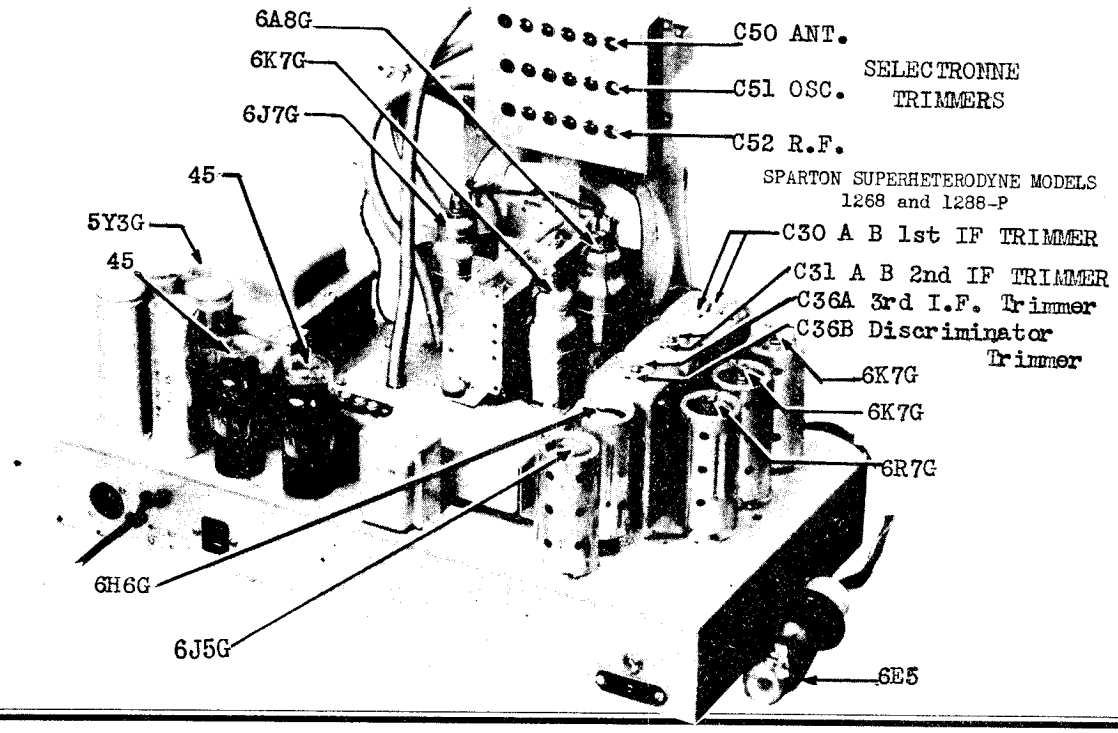

©John F. Rider, Publisher

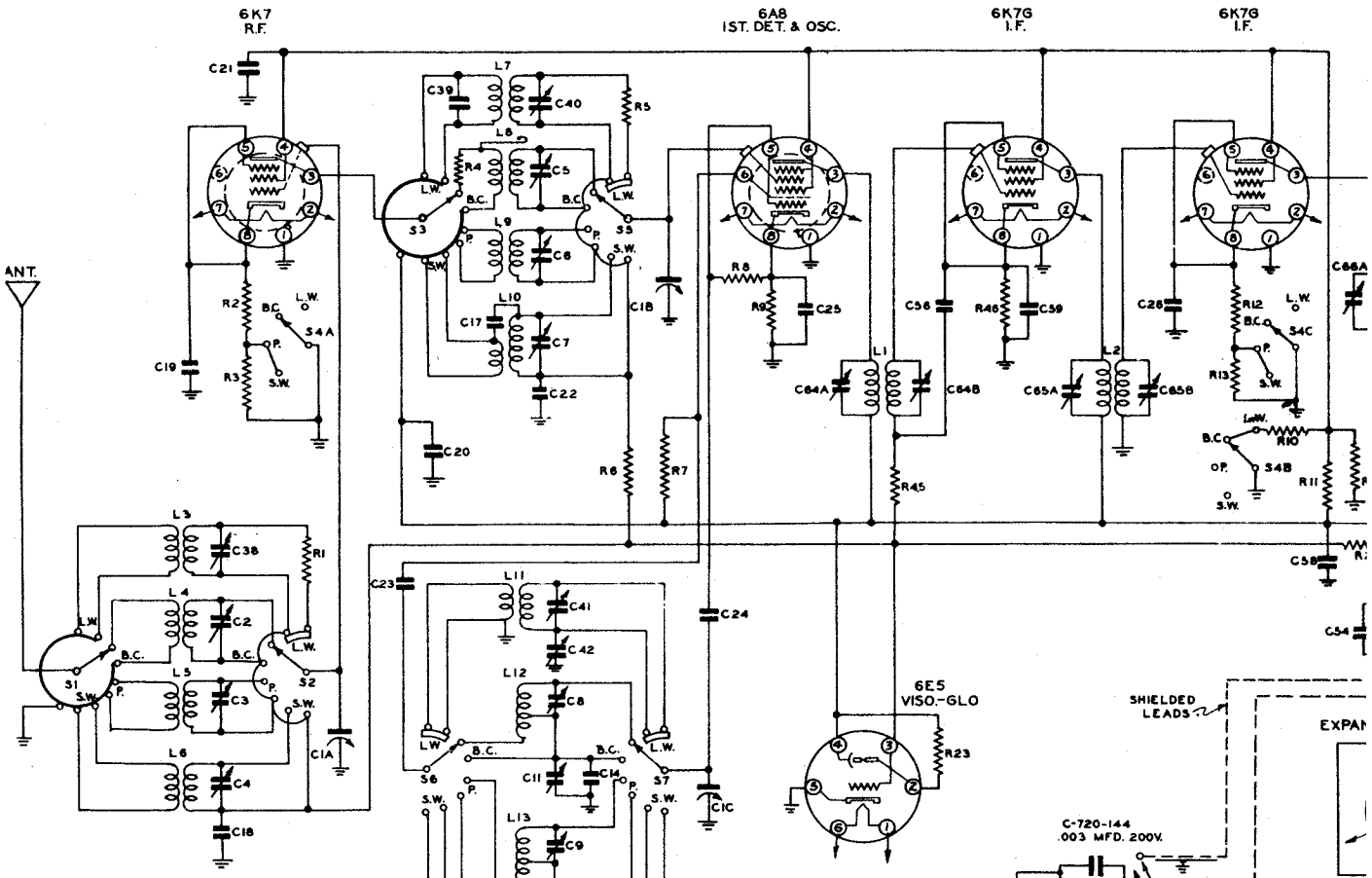

C1A	B&C VARIABLE CONDENSER	B-7012
C2	ANT. B.C. TRIMMER	A-14088-1
C3	ANT. POL. TRIMMER	A-14088-1
C4	ANT. S.W. TRIMMER	A-14088-1
C5	R.F. B.C. TRIMMER	A-14088-1
C6	R.F. POL. TRIMMER	A-14088-1
C7	R.F. S.W. TRIMMER	A-14088-1
C8	OSC. B.C. TRIMMER	A-14088-1
C9	OSC. POL. TRIMMER	A-14088-1
C10	OSC. S.W. TRIMMER	A-14088-1
C11	OSC. B.C. PADDER	A-14088-1
C12	OSC. POL. PADDER	A-14088-2
C13	OSC. S.W. PADDER	A-14088-3
C14	.00045 MFD. MOLDED	C-720-344
C15	.0011 MFD. MOLDED	C-720-338
C16	.00365 MFD. MOLDED	C-720-341
C17	COUPLER CONDENSER	A-10896
C18	.05 MFD. 200 V.	C-720-52
C19	.1 MFD. 100 V.	C-720-62
C20	.05 MFD. 400 V.	C-720-57
C21	.05 MFD. 400 V.	C-720-57
C22	.05 MFD. 200 V.	C-720-52
C23	.006 MFD. 600 V.	C-720-17
C24	.00005 MFD. MOLDED	C-720-320
C25	.1 MFD. 100 V.	C-720-62
C26	.1 MFD. 100 V.	C-720-62
C27	.0001 MFD. MOLDED	C-720-325
C28	.05 MFD. 400 V	C-720-57
C29	.00025 MFD. MOLDED	C-720-319
C30	.1 MFD. 100 V.	C-720-62
C31	.1 MFD. 400 V.	C-720-61
C32	.00025 MFD. MOLDED	C-720-319
C33	.05 MFD. 400V.	C-720-57
C34	.1 MFD. 100V.	C-720-62
C35	16 MFD. 400V. ELECT.	A-14138
C36	16 MFD 450 V. ELECT.	A-14073
C37	16 MFD. 350 V. ELECT.	A-14139
C38	ANT. L.W. TRIMMER	A-14088-1
C39	.00025 MFD. MOLDED	C-720-319
C40	R.F. L.W. TRIMMER	A-14088-1
C41	OSC. L.W. TRIMMER	A-14088-1
C42	OSC. L.W. PADDER	A-14088-3
C43	.05 MFD. 200V.	C-720-52
C44	.006 MFD. 600 V.	C-720-17
C45	.3 MFD. 200 V.	C-720-91
C46	.2 MFD. 200V.	C-720-87
C47	.5 MFD. 200 V.	C-720-104
C48	.002 MFD. 200V.	C-720-143
C49	.01 MFD. 200 V.	C-720-20
C50	.01 MFD. 200 V.	C-720-20
C51	.2 MFD. 400 V.	C-720-86
C52	.3 MFD. 200V	C-720-91
C53	.006-006 MFD. 600V.	C-720-150
C54	.0001 MFD. MOLDED	C-720-325
C55	.02 MFD. 1000	C-720-146
C56	.1 MFD. 100V.	C-720-62
C57	.25 MFD. 325 V. ELECT	A-14184
C58	.1 MFD. 400 V.	C-720-61
C59	.1 MFD. 100V.	C-720-62
C60	.002 MFD. MOLDED	C-720-312
C61	16 MFD. 450 V. ELECT.	A-14073
C62	16 MFD. 425 V. ELECT.	A-14260
C63	25 MFD. 100 V. ELECT.	A-14259
C64	NO. 1 I.F. TRIMMER	A-14373
C65	NO. 2 I.F. TRIMMER	A-14373
C66	NO. 3 I.F. TRIMMER	A-14375

L1	NO.1 I.F. COIL	A-12064-2
L2	NO.2 I.F. COIL	A-12064-2
L3	ANT. L.W. COIL	A-14243-4
L4	ANT. B.C. COIL	A-14243-1
L5	ANT. POL. COIL	A-14243-2
L6	ANT. S.W. COIL	A-14243-3
L7	R.F. L.W. COIL	A-14242-4
L8	R.F. B.C. COIL	A-14242-1
L9	R.F. POL. COIL	A-14242-2
L10	R.F. S.W. COIL	A-14242-3
L11	OSC. L.W. COIL	A-14241-4
L12	OSC. B.C. COIL	A-14241-1
L13	OSC. POL. COIL	A-14241-2
L14	OSC. S.W. COIL	A-14241-3
L15	NO. 3 I.F. COIL	A-14254

	NO. FROM BACK OF SET
S1	ANT. PRI. SECTION
S2	ANT. SEC. SECTION
S3	R.F. PRI. SECTION
S4A	R.F. BIAS SECTION
S4B	SCREEN SECTION
S4C	I.F. BIAS SECTION
S5	R.F. SEC. SECTION
S6	OSC. PRI. SECTION
S7	OSC. SEC. SECTION

R1	100 Ω .1 W.	C-2794-50B	
R2	270 Ω .25 W.	C-2795-55B	
R3	1000 Ω .25 W.	C-2795-62B	
R4	2200 Ω .1 W.	C-2794-66B	
R5	100 Ω .1 W.	C-2794-50B	
R6	100 000 Ω .25 W	C-2795-25B	
R7	22 000 Ω .5 W.	C-2796-78C	
R8	56 000 Ω .25 W.	C-2795-83B	
R9	330 Ω .25 W.	C-2795-56B	
R10	22 000 Ω .25 W.	C-2796-78C	
R11	18 000 Ω 3 W.	C-2798-77A	
R12	270 Ω .25 W.	C-2795-55B	
R13	470 Ω .25 W.	C-2795-58B	
R14	TONE CONTROL & A.C. SWITCH	A-14137	
R15	VOLUME CONTROL	A-14110	
R16	56 000 Ω .25 W.	C-2795-83B	
R17	1 MEGOHM .25 W.	C-2795-98B	
R18	270 000 Ω .25 W.	C-2795-91B	
R19	100 000 Ω .25 W.	C-2795-25B	
R20	1 MEGOHM .25 W.	C-2795-98B	
R21	270 000 Ω .25 W.	C-2795-91B	
R22	1 MEGOHM .25 W.	C-2795-98B	
R23	1 MEGOHM .25 W.	C-2795-98B	
R24	1 MEGOHM .25 W.	C-2795-98B	
R25	470 000 Ω .25W.	C-2795-94B	
R26	56 000 Ω .25 W.		
R27	680 000 Ω .25 W.		
R28	120 000 Ω .25 W.		
R29	82 00 Ω 1 W.		
R30	2400 Ω .5 W.		
R31	27 Ω .25 W.		
R32	27 Ω .25 W.		
R33	100 000 Ω .25 W.		
R34	470 000 Ω .25 W.		
R35	56 000 Ω .25 W.		
R36	27 000 Ω 1 W.		
R37	750 Ω .25 W.		
R38	27 000 Ω 2 W.		
R39	700 Ω 7 W.		
R40	470 000 Ω .25 W.		
R41	1 MEGOHM .25 W.		
R42	910 Ω 2 W.		
R43	56 000 Ω .25 W.		
R44	47 000 Ω 1 W.		
R45	100 000 Ω .25 W.		
R46	10 000 Ω .25 W.		
R47	470 000 Ω .25 W.		
R48	220 000 Ω .25 W.		

SCHEMATIC DIAGRAM
SPARTON SUPERHETERODYNE MODEL 15
INTERMEDIATE FREQUENCY 456 K.C.

Line Voltage: 115 volts

Symphonic Expander Control: C

Position of Volume Control: Full with Antenna Disco

Position of Band Selector Switch: Broadcast Band

o	500 volt scale	*	0 or 6.1
oo	Direct Current	**	50 volt
ooo	1 volt scale	***	100 volt

(ORIGINAL) EFFECTIVE OCT 28, 1936

©John F. Rider, Publisher

HINGTON CO.

MODEL 1567
Schematic, Parts
Voltage

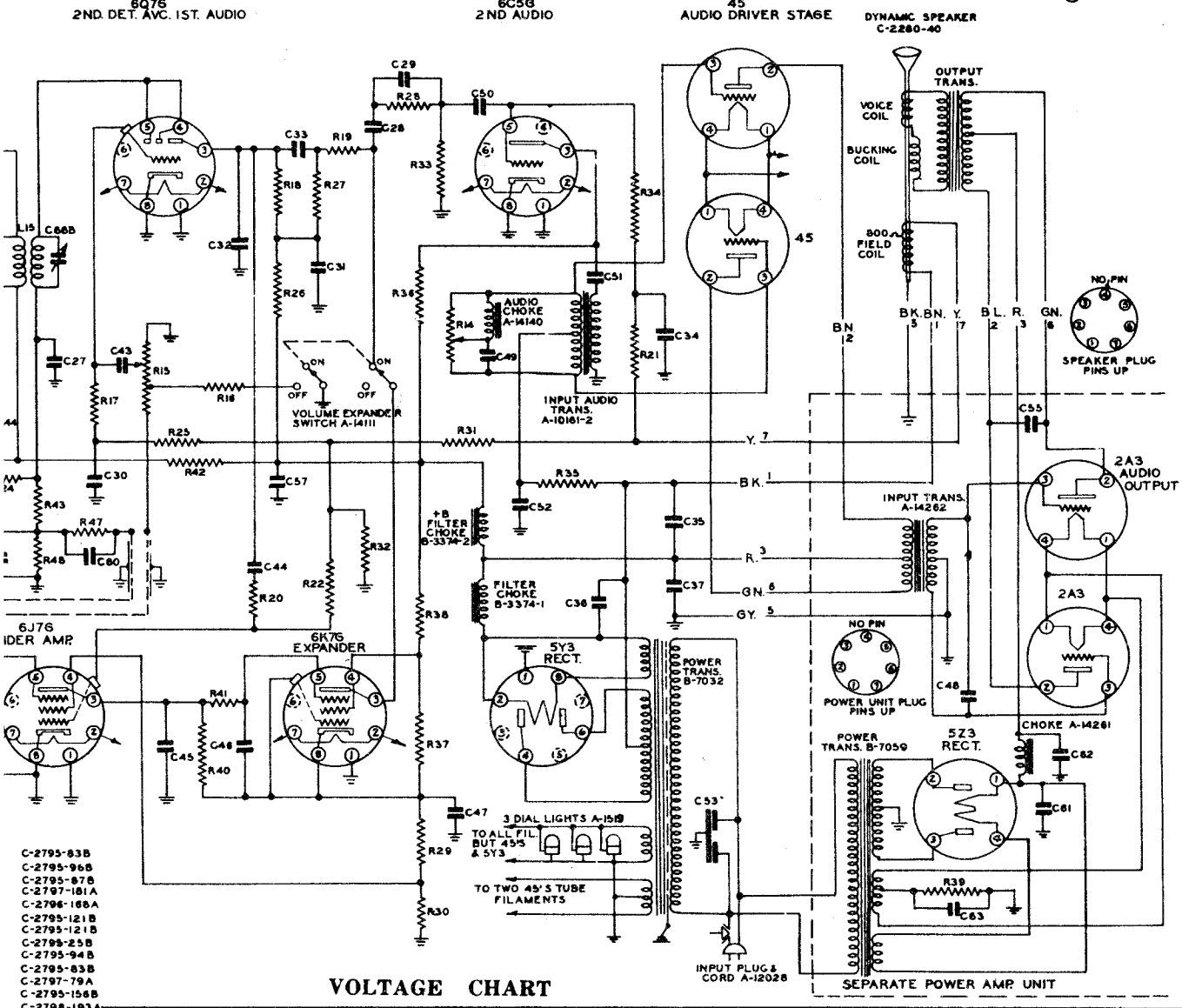

C-2795-83B
C-2795-96B
C-2795-87B
C-2797-181A
C-2796-168A
C-2795-121B
C-2795-121B
C-2795-25B
C-2795-94B
C-2795-83B
C-2797-79A
C-2795-156B
C-2798-193A
A-14263
C-2795-94B
C-2795-98B
C-2798-158A
C-2795-83B
C-2797-82A
C-2795-25B
C-2795-74B
C-2795-94B
C-2795-90B

67.

ff

nnected

. volts
scale
; scale

VOLTAGE CHART

Tube	Function	Voltage of Each Socket Prong to Ground (See Prong Numbers on Schematic Diagram)								
		Prong No. 1	Prong No. 2	Prong No. 3	Prong No. 4	Prong No. 5	Prong No. 6	Prong No. 7	Prong No. 8	Grid Cap
6K7	R-F Amplifier	0	*	260	88	0	-	*	0	0
6A8	1st. Det-Oscillator	0	*	275	105	0	260	*	0	0
6K7G	1st. I-F Amplifier	0	*	265	85	0	-	*	0	0
6K7G	2nd. I-F Amplifier	0	*	270	90	0	-	*	0	0
6Q7G	2nd. Det-AVC-1st. A-F Amplifier	0	*	38**	0	0	-	*	0	0
6J7G	Expander Amplifier	0	*	70***	16	0	-	*	0	0
6K7G	Symphonic Expander	0	*	0	80	20 °	72	*	72	72
6C5G	2nd. A-F Amplifier	0	*	270	-	0	-	*	0	-
45	Audio Driver	1.24	300	34**	1.24	-	-	-	-	-
45	Audio Driver	1.24	300	34**	1.24	-	-	-	-	-
2A3	Power Amplifier	54 °°	370	0	54 °°	-	-	-	-	-
2A3	Power Amplifier	54 °°	370	0	54 °°	-	-	-	-	-
5Y3G	Rectifier (Upper Chassis)	0	0	-	370	-	370	-	0	-
5Z3	Rectifier (Lower Chassis)	1 °°°	350	350	5	-	-	-	-	-
6E5	Viso-Glo	6.1	12	0	260	0	0	-	-	-

MODEL 1567
Socket, Chassis

SPARKS WITHINGTON CO.

Model 1567

CHASSIS DIAGRAM

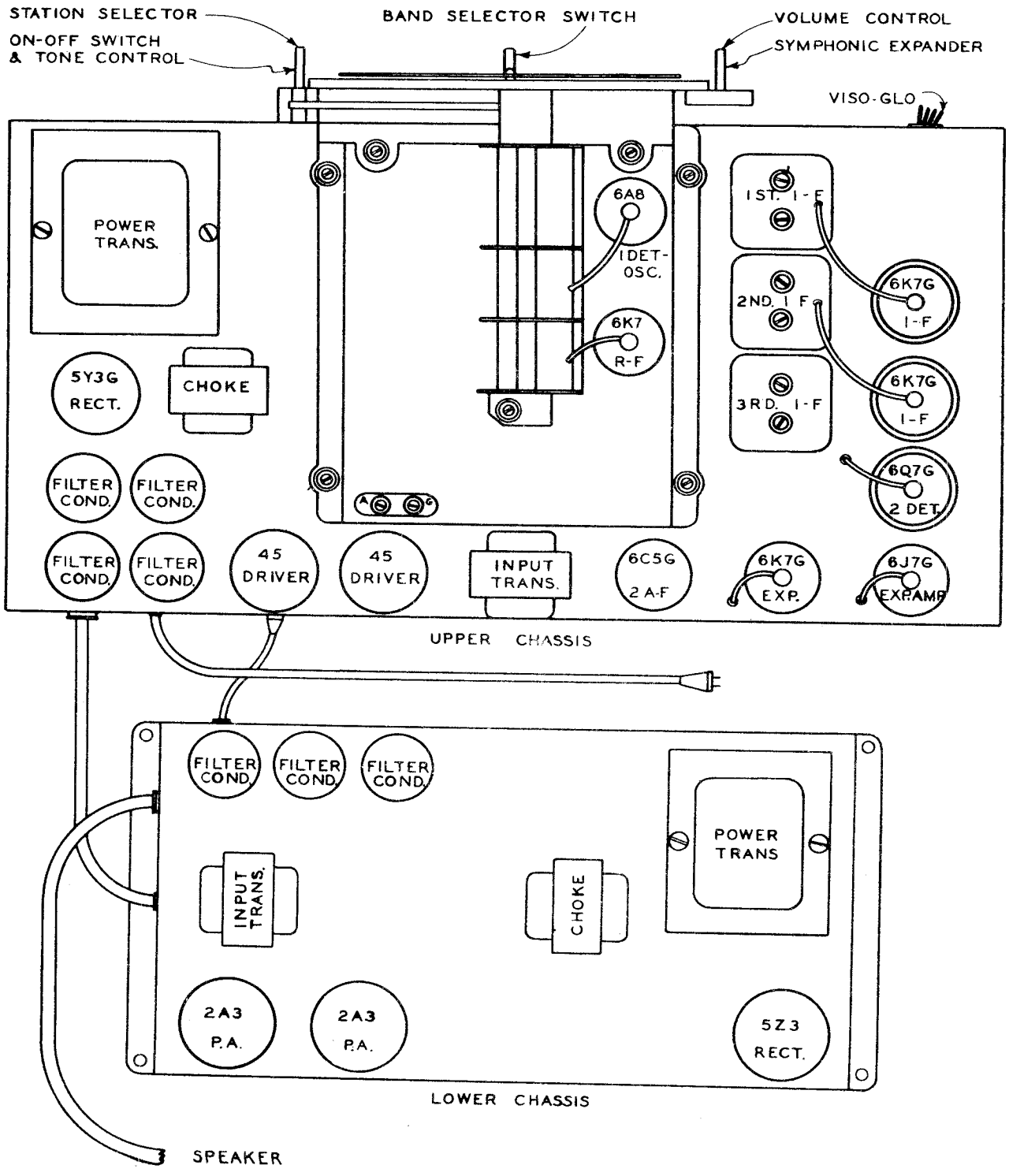

©John F. Rider, Publisher

MODELS 676(Late) 686,D686
H686
Schematic,Parts,Socket
Trimmers,Voltage,Resistance
Alignment

SPARKS WITHINGTON CO.

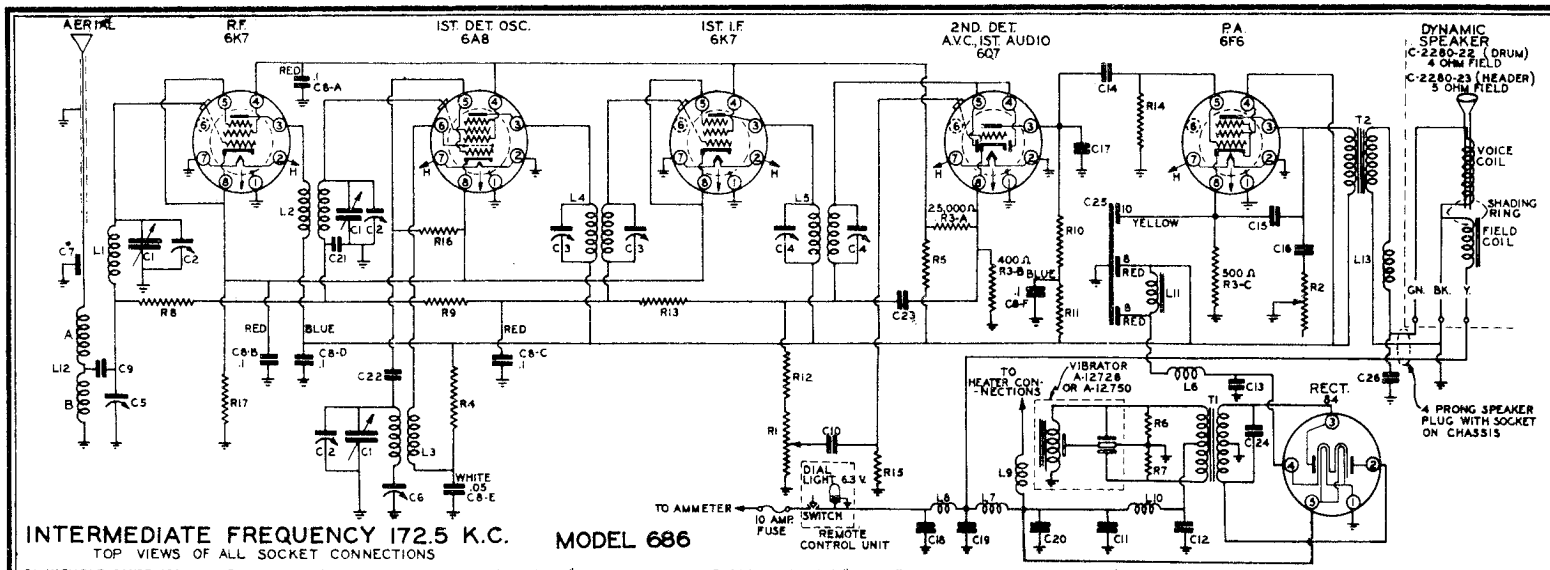

INTERMEDIATE FREQUENCY 172.5 K.C.

TOP VIEWS OF ALL SOCKET CONNECTIONS

MODEL 686

C1	VARIABLE CONDENSER	B-6690	C14	.02 MFD. 400 V.	C-721-5	R1	250,000 Ω VOLUME CONT.	A-14013	R14	270,000 Ω .25 W.	C-2795-81A	L1	ANTENNA COIL	A-12293-7
C2	VAR. COND. TRIMMERS		C15	.004 MFD. 600 V.	C-721-6	R2	1,000,000 Ω TONE CONT.	A-12681	R15	270,000 Ω .25 W.	C-2795-91A	L2	R.F. COIL	A-12052-3
C3	NO. 1 I.F. TRIMMER	A-12668	C16	.03 MFD. 600 V.	C-721-7	R3-A,B & C	CANDOHM	A-12657	R16	47,000 Ω .25 W.	C-2795-199A	L3	OSCILLATOR COIL	A-12055-4
C4	NO. 2 I.F. TRIMMER	A-12668	C17	.00025 MFD. MOLDED	C-720-324	R4	18,000 Ω .5 W.	C-2796-77A	R17	270 Ω .25 W.	C-2795-55A	L4	NO. 1 I.F. COIL	A-12064-5
C5	ANTENNA PADDER	A-14012-1	C18	.0001 MFD. MOLDED	C-720-325	R5	18,000 Ω 1 W.	C-2797-77A				L5	NO. 2 I.F. COIL	A-12064-4
C6	OSCILLATOR PADDER	A-14012-2	C19	.0001 MFD. MOLDED	C-720-325	R6	100 Ω .25 W.	C-2795-7A				L6	+B R.F. FILTER CHOKE	A-12666-1
C7	ANTENNA FILTER CONDENSER		C20	.0001 MFD. MOLDED	C-720-325	R7	100 Ω .25 W.	C-2795-7A				L7	R.F. FILTER CHOKE 2ST.	A-12660
C8-A,B,C,D,E&F	BYPASS BLOCK	A-12673	C21	.001 MFD. MOLDED	C-720-323	R8	100,000 Ω .25 W.	C-2795-86A				L8	R.F. FILTER CHOKE 1ST.	A-12660-1
C9	.005 MFD. 200 V.	C-721-1	C22	.00005 MFD. MOLDED	C-720-315	R9	100,000 Ω .25 W.	C-2795-86A				L9	FILAMENT CHOKE 2&T.	A-12660-2
C10	.02 MFD. 200 V.	C-721-2	C23	.00025 MFD. MOLDED	C-720-324	R10	100,000 Ω .25 W.	C-2795-86A				L10	R.F. CHOKE	A-12670
C11	.5 MFD. 120 V.	C-721-3	C24	.009 MFD. MOLDED	A-12741	R11	100,000 Ω .25 W.	C-2795-86A				L11	CHOKE	A-12597
C12	.5 MFD. 120 V.	C-721-3	C25	8-8-10 MFD. ELECTRO.	A-12674	R12	47,000 Ω .25 W.	C-2795-82A				L12	ANT.(A)& MODULATION(B) CHOKE	A-12772
C13	.1 MFD. 400 V.	C-721-4	C26	.00085 MFD. MOLDED	C-720-324	R13	470,000 Ω .25 W.	C-2795-29A				L13	VOICE COIL FILTER CHOKE	A-12683

T1 POWER TRANSFORMER B-6685
T2 OUTPUT TRANSFORMER A-12678

CONVENTIONAL ALIGNMENT - SEE SPECIAL SECTION VOLUME VIII

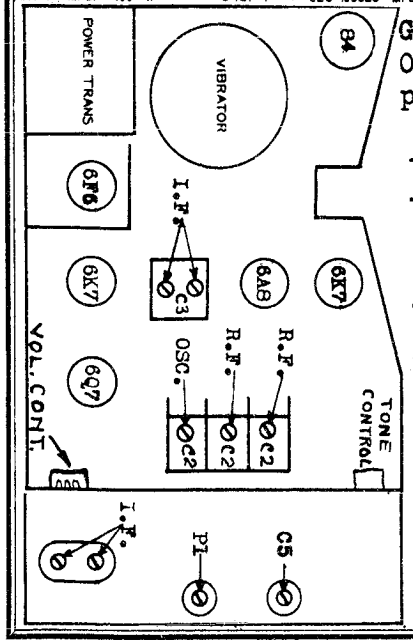

Generator to cap of 6A8, align IF trimmers at 172.5 KC. Generator at 1350 KC, peak Oscillator and RF trimmers for maximum, Generator at 600 KC, adjust oscillator padder to maximum peak while rocking gang condenser. Repeat adjustments.

JUNE 1, 1936 VOLTAGE-RESISTANCE CHART

Condition of "A" Battery: Good Position of Volume Control: Full with Antenna Disconnected

Tube	Function	Voltage and Resistance of Each Socket Prong to Ground (See Prong Numbers on Schematic Diagram)									
		Measurement	Prong No. 1	Prong No. 2	Prong No. 3	Prong No. 4	Prong No. 5	Prong No. 6	Prong No. 7	Prong No. 8	Grid Cap
6K7	R-F Amplifier	Volts	0	6	220	66	2.3	-	0	2.2	0
		Ohms	0	4	40000	23000	230	-	0	250	550000
6A8	1st. Det-Osc	Volts	0	0	220	74	.5	6	2.5	0	
		Ohms	0	0	40000	23000	45000	60000	4	250	550000
6K7	I-F Amplifier	Volts	0	6	220	66	2.3	-	0	2.5	0
		Ohms	0	4	40000	24000	230	-	0	250	500000
6Q7	2nd. Det-A.V.C.	Volts	0	0	68	0	0	-	6	1	0
		Ohms	0	0	300000	300000	400000	-	4	400	200000
6F6	Power Amplifier	Volts	0	0	250	250	0	0	6	0	-
		Ohms	0	0	44000	42000	250000	-	4	500	-
84	Rectifier	Volts	0	28	28	-3	6	-	-	-	-
		Ohms	0	150	130	40000	4	-	-	-	-

©John F. Rider, Publisher

MODEL 100
Chassis X-8
Schematic, Socket
Voltage, Trimmers

SPIEGEL, INC.

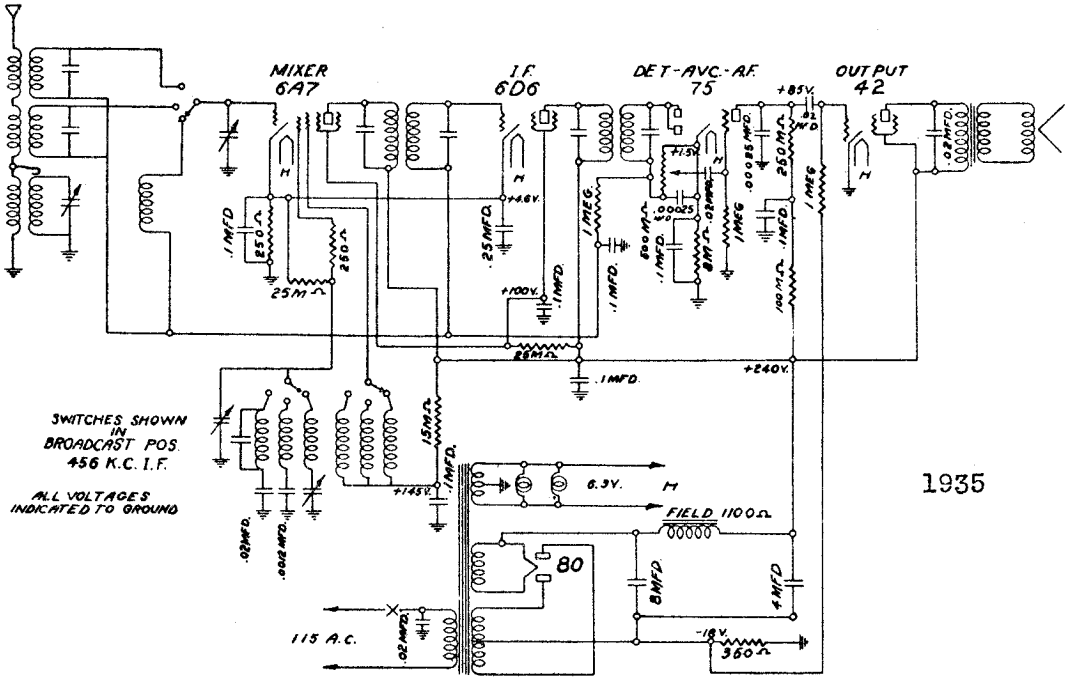

1935

Five Tube A.C. Superheterodyne X8

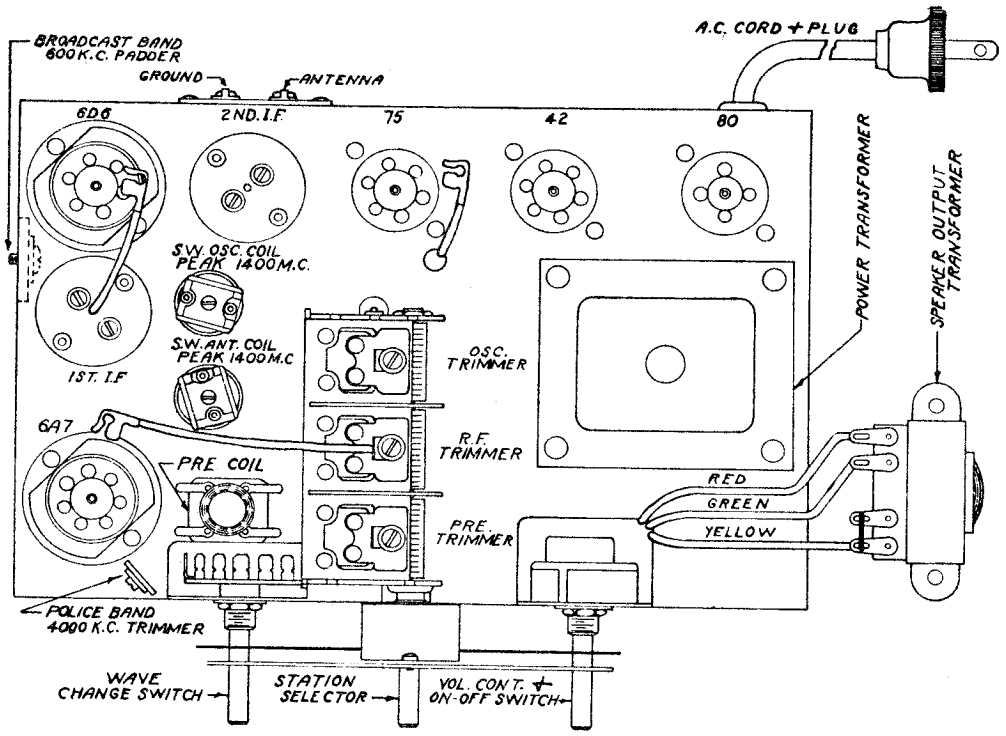

©John F. Rider, Publisher

©John F. Rider, Publisher

Five Tube A.C. All Wave Superheterodyne X8

This receiver is designed to operate over three tuning ranges. The broadcast range which extends from 540 to 1700 Kilocycles (KC) (175 to 550 meters), Police and Aviation Band which extends from 1700 to 5000 Kilocycles (KC) (52 to 175 Meters) and the International Short Wave Band which extends from 5800 to 15,200 Kilocycles (KC) (18.5 to 52 meters). This short wave range is the one which includes the four internationally assigned bands—the 19, 25, 31 and 49 meter bands.

ALIGNMENT DATA AND SERVICING

BROADCAST BAND ALIGNMENT Adjust the oscillator to 1400 KC and connect the output to the antenna post marked "A" through a .0001 mfd. mica condenser to give the equivalent of an antenna about 60 feet. Set the receiver pointer to 1400 KC and adjust the rear gang condenser trimmer (oscillator circuit) to peak. After this has been carefully done, the next step is to adjust the center and front trimmers of the gang condenser to peak. The center gang section tunes the R.F. or grid coil of the 6A7 tube and the front condenser section tunes the pre-selector stage circuit.

Next, re-set the dial pointer on the receiver and the test oscillator to 600 KC. Slowly increase or decrease the oscillator padding condenser and at the same time continuously tune back and forth across the signal with the receiver until the maximum reading is obtained on the output meter. This adjustment seems a little complicated but is the easiest way to adjust the oscillator to the pre-selector or R.F. section. The padding condenser is located on the left hand end of the chassis near the 6D6 tube.

Return to 1400 KC and again go over the adjustments of this frequency to be certain that they were not put slightly out of alignment when adjustment was made at 600 KC.

This completes the correct sequence of operations in properly aligning the receiver for the Broadcast Band, and **must always be done before** attempting to align the Short Wave Bands.

FOREIGN BAND The Foreign Band of 19 to 49 meters can be adjusted by the two trimmers on the short wave coil located on the top of the chassis. Set the test oscillator to 14,000 KC. The oscillator coil is located near the 1st I.F. Transformer and the antenna or R.F. coil is located directly in front of the Short Wave oscillator coil and about midway between the 1st I.F. Transformer and the 6A7 tube. These two trimmers should be adjusted for peak at 14,000 KC and as the inherent design of the circuit has been expressly designed for simplicity in servicing, no other adjustments are necessary for aligning this band. **Note:** Always start this procedure by having the oscillator coil trimmer loose (out all the way), and the antenna coil trimmer fairly tight (in all the way); otherwise it is possible to make a false alignment on the image frequency.

Important: Do not attempt any adjustment of the gang condenser trimmers in aligning the Foreign Band as this will throw the Broadcast Band out of alignment.

POLICE BAND There is only one adjustment to be made in the alignment of the Police Band. Due to the circuit design and correct matching of the coils, no oscillator adjustment is necessary.

Set the dial pointer to 4000 KC (also the test oscillator) and adjust the antenna coil trimmer to resonance. The two police band coils are under the chassis, but the antenna coil trimmer for this band is on top of the chassis and is located at the left front corner along side of wave band switch.

Important: This is the only adjustment necessary for the Police Band. Do not attempt any adjustment of the gang condenser trimmers in aligning the Police Band, otherwise the Broadcast Band will be thrown out of alignment.

This receiver is designed to operate from a power supply main of 110-120 volts, 60 cycle alternating current (AC). **Never plug into a DC outlet.**

GENERAL DATA The alignment of this receiver requires the use of a test oscillator that will cover the frequencies of 456, 600, 1400, 1800, 4000, 6000, and 14,000 KC and an output meter to be connected across the primary or secondary of the output transformers. If possible, all alignments should be made with the volume control on maximum and the test oscillator ouput as low as possible, to prevent the AVC from operating and giving false readings.

CORRECT ALIGNMENT PROCEDURE The intermediate frequency (I.F.) stage should be aligned properly as the first step. After the I.F. transformers have been properly adjusted and peaked, the Broadcast Band should always be the next procedure; after which, either or both of the Short Wave Bands may be aligned.

I.F. ALIGNMENT Adjust the test oscillator to 456 KC and connect the output to the grid of the first detector tubes (6A7) through a .05 or .1 mfd. condenser. The ground on the test oscillator can be connected to the chassis ground. Align all four I.F. trimmers to peak or maximum reading on the output meter.

PARTS LIST

Part No.	Description	Part No.	Description
P166	25,000 Ohm ¼ Watt Resistor	P160	Elect. Condenser
P165	25,000 Ohm 1 Watt Resistor	P170	350 Ohm Resistor
P280	100,000 Ohm ¼ Watt Resistor	P173	Oscillator Coil
P138	250,000 Ohm ¼ Watt Resistor	P176	A.C. Plug & Cord
P162	1 Megohm ¼ Watt Resistor	P182	Speaker Output Transformer
P143	.02 Mfd. 400 Volt Condenser	P189	1st I.F. Transformer
P142	.1 Mfd. 200 Volt Condenser	P190	2nd I.F. Transformer
P276	.1 Mfd. 400 Volt Condenser	P617	Padding Condenser
P141	.25 Mfd. 200 Volt Condenser	G560	Short Wave Antenna Coil
P478	.0012 Mfd. 200 Volt Condenser	G561	Short Wave Oscillator Coil
P147	.00025 Mica Condenser	P193	Pre-Selector Coil
P435	6" Speaker Cone Only	P306	Power Transformer
P438	Speaker Field Coil	G562	Police Band Antenna Coil
G564	Spider & Voice Coil Unit—Complete 6" Dynamic Speaker	G563	Police Band Oscillator Coil
		P642	3 Gang Condenser
P634	Knob	P630	Volume Control & "On-Off" Switch
P639	Dial Glass	P629	Wave Change Switch
P632	Dial & Scale—Complete	P136	250 Ohm ¼ Watt Resistor
P124	Pilot Light	P168	8,000 Ohm ¼ Watt Resistor
		P258	15,000 Ohm ¼ Watt Resistor

SPIEGEL, INC.

MODELS 120,140
Chassis L-5
Schematic, Voltage
Socket, Trimmers

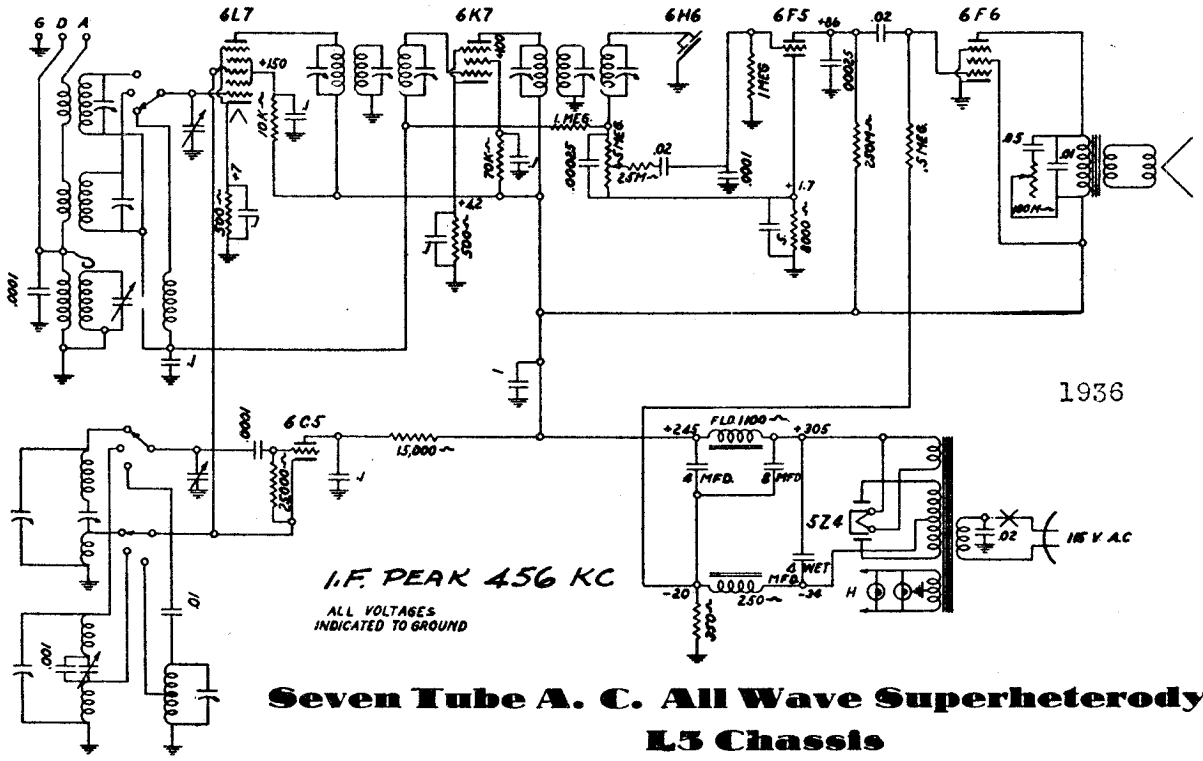

Seven Tube A. C. All Wave Superheterodyne
L5 Chassis

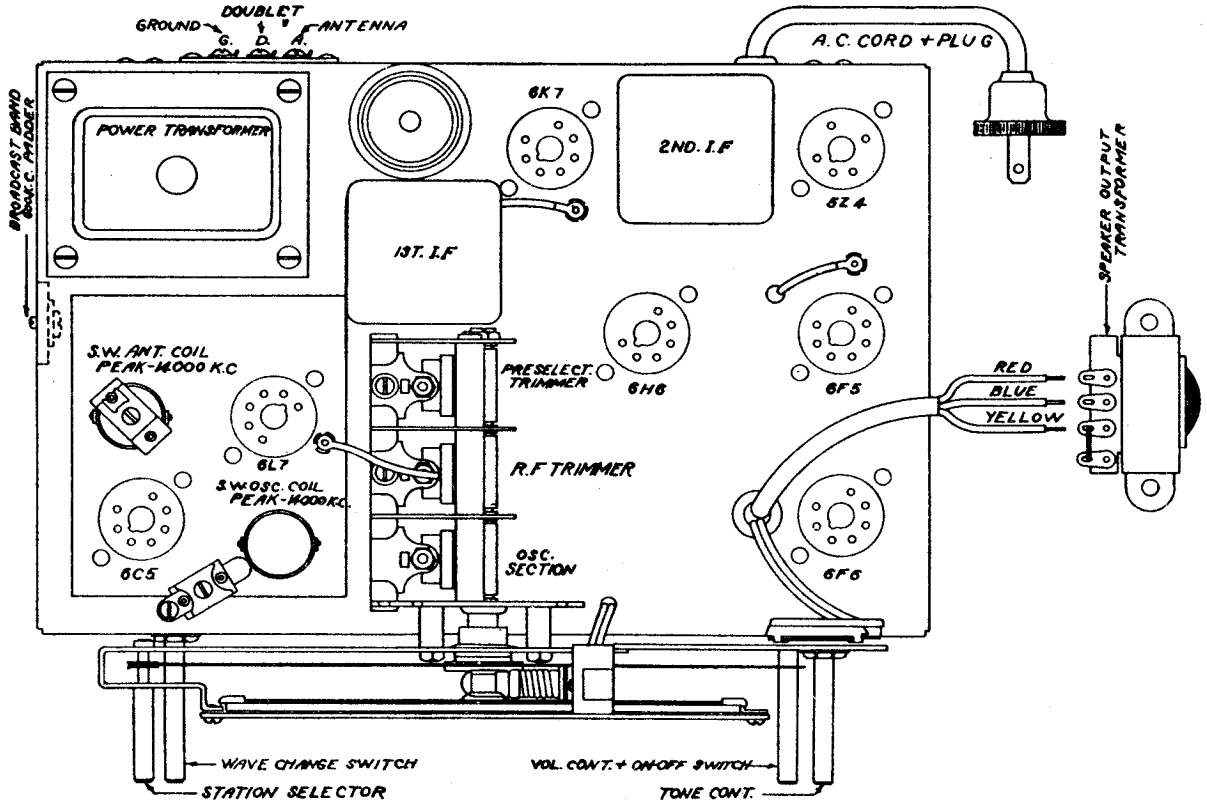

©John F. Rider, Publisher

L5

Seven Tube A. C. All Wave Superheterodyne

This receiver is designed to operate over three tuning ranges: the broadcast range which extends from 540 to 1700 Kilocycles (KC) (175 to 550 meters), Police and Aviation Band which extends from 1700 to 5000 Kilocycles (KC) (52 to 175 Meters) and the International Short Wave Band which extends from 5800 to 15,200 Kilocycles (KC) (18.5 to 52 meters). This latter range is the one which includes the four internationally assigned bands —the 19, 25, 31 and 49 meter bands.

ALIGNMENT DATA AND SERVICING

This receiver is designed to operate from a power supply main of 110-120 volts, 60 cycle alternating current (AC). **Never plug into a DC outlet.**

GENERAL DATA The alignment of this receiver requires the use of a test oscillator that will cover the frequencies of 456, 600, 1400, 1800, 4000, 6000, and 14,000 KC and an output meter to be connected across the primary or secondary of the output transformers. If possible, all alignment should be made with the volume control on maximum and the test oscillator output as low as possible, to prevent the AVC from operating and giving false readings.

CORRECT ALIGNMENT PROCEDURE The intermediate frequency (I.F.) stage should be aligned properly as the first step. After the I.F. transformers have been properly adjusted and peaked, the Broadcast Band should always be the next procedure; after which, either or both of the Short Wave Bands may be aligned.

I.F. ALIGNMENT Adjust the test oscillator to 456 KC and connect the output to the grid of the first detector tubes (6L7) through a .05 or .1 mfd. condenser. The ground on the test oscillator can be connected to the chassis ground. Align all six I.F. trimmers to peak or maximum reading on the output meter.

BROADCAST BAND ALIGNMENT Adjust the oscillator to 1400 KC and connect the output to the antenna post marked "A" through a .0001 mfd. mica condenser to give the equivalent of an antenna about 60 feet. Set the receiver pointer to 1400 KC and adjust the oscillator trimmer to peak. This trimmer is mounted on the oscillator coil and is located directly under the 6C5 socket. (This adjustment must be made from the bottom of the chassis.) After this has been carefully done, the next step is to adjust the center and rear trimmers of the gang condenser to peak. The center gang section tunes the R.F. or grid coil of the 6L7 tube and the rear condenser section tunes the pre-selector stage circuit.

Next, re-set the dial pointer on the receiver and the test oscillator to 600 KC. Slowly increase or decrease the oscillator padding condenser and at the same time continuously tune back and forth across the signal with the receiver until the maximum reading is obtained on the output meter. This adjustment seems a little complicated but is the easiest way to adjust the oscillator to the pre-selector or R.F. section. The padding condenser is located in the left end of the chassis. Return to 1400 KC and again go over the adjustments of this frequency to be certain that they were not put slightly out of alignment when adjustment was made at 600 KC.

If it is found that in returning to 1400 KC the pointer is accurately on scale, the only readjustments that should be made (in this recheck) are the center and rear trimmers of the gang condenser. If the pointer is found off scale, it may be corrected and put on scale by reallignment of the oscillator trimmer. Alignment of the pointer can **only** be corrected by adjustment of the oscillator trimmer.

This completes the correct sequence of operations in properly aligning the receiver for the Broadcast Band, and **must always be done before** attempting to align the Short Wave Bands.

FOREIGN BAND The Foreign Band of 19 to 49 meters can be adjusted by the two trimmers located on the top of the chassis. The R.F. trimmer is located directly on top of the R.F. or Antenna coil and the oscillator trimmer is mounted on the chassis near the front of the oscillator coil. Set the test oscillator to 14,000 KC. In preparing the test oscillator for alignment of this band, connect a 400 ohm carbon resistor in series with the .0001 mfd. condenser on the output lead of the test oscillator. This resistor is used with the test oscillator only on the Short Wave Bands and should not be used for Broadcast Band alignment. The next operation is to adjust the R.F. and oscillator trimmers for peak at 14,000 KC and as the inherent design of the circuit has been expressly engineered for simplicity in servicing, no other adjustments are necessary for aligning this band.

Note: In order to prevent alignment on the image frequency, it is suggested that alignment be started with the antenna coil trimmer screwed down tightly. To check this adjustment, readjust the pointer to 13100 KC where the image frequency should be found. If properly aligned, the image frequency will be found to be weaker. If, however, the signal at 13100 KC is found to be stronger than the signal at 14000 KC, it signifies that alignment was incorrectly made on the image frequency.

Important: Do not attempt any adjustment of the gang condenser trimmers in aligning the Foreign Band as this will throw the Broadcast Band out of alignment.

POLICE BAND In preparing the test oscillator for alignment of this band, connect a 400 ohm carbon resistor in series with a .0001 mfd. condenser on the output lead of the test oscillator. This resistor is used with the test oscillator only on the Short Wave Bands and should not be used for Broadcast Band alignment.

Set the receiver pointer to 4000 KC (also test oscillator) and adjust the oscillator circuit trimmer to peak. The oscillator trimmer is mounted on the oscillator coil, which is located underneath the chassis. The oscillator coil is wound with enamel wire and is mounted to the front edge of the chassis. After this has been carefully done, the next step is to adjust the antenna trimmer to peak. The antenna trimmer is attached to the antenna coil; also mounted underneath the chassis and wound with enamel wire. The antenna coil is located nearest the power transformer. Now reset the dial pointer and the test oscillator to 1800 KC in preparation for adjusting the police band padding condenser. This padding condenser is mounted on the underside of the chassis, directly underneath the gang condenser. Slowly increase or decrease the oscillator padding condenser and at the same time continuously tune back and forth across the signal with the receiver until the maximum reading is obtained on the output meter. This adjustment seems a little complicated, but is the easiest way to correctly adjust the oscillator to the R.F. or antenna section.

Return to 4000 KC and again go over the adjustments of this frequency to be certain that they were not put slightly out of alignment when adjustment was made 1800 KC.

If it is found that in returning to 4000 KC the pointer is accurately on scale, the only readjustment that should be made (in this recheck) is the trimmer on the enamel wire antenna coil located underneath the chassis near the power transformer. If the pointer is found off scale, it may be corrected and put on scale by readjustment of the oscillator trimmer. Alignment of the pointer can only be corrected by adjustment of the oscillator trimmer.

Important: There are only three trimmer adjustments necessary for the Police Band. Do not attempt any adjustment of the gang condenser trimmers in aligning the Police Band; otherwise, the Broadcast Band will be thrown out of alignment.

SERVICE DATA FOR ALL BANDS

If it is suspected that the oscillator has stopped but is doubtful due to the presence of the usual amount of noise level, it is suggested that the oscillator plate voltage be checked. An approximate normal minimum oscillating voltage for the plate of the 6C5 (oscillator tube) at 115 volt line potential is as follows:

Broadcast Band	600 KC	124 Volts
	1400 KC	106 Volts
Foreign Band	6000 KC	137 Volts
	14000 KC	140 Volts
Police Band	1700 KC	128 Volts
	4000 KC	110 Volts

Another way of ascertaining whether the tube is oscillating is to ground the grid of the 6C5. If oscillating properly, grounding the grid will cause an appreciable drop in oscillator voltage.

Provisions have been made in this receiver for all types of antennas.

REGULAR ANTENNA Use a standard outside antenna of at least 50 feet including lead-in. Connect to antenna post marked **"A."**

In remote locations that are far away from powerful broadcasting stations, a longer antenna may be used for increased receiving range. Antennas as long as 150 to 200 feet may be employed in "dead spots." (Longer antennas increase sensitivity and decrease selectivity slightly.)

PARTS LIST

Part No.	Description
G730	Police Band Antenna Coil
G731	Police Band Oscillator Coil
P178	A.C. Cord & Plug
P170	350 Ohm Resistor
P279	500 Ohm ½ Watt Resistor
P168	8,000 Ohm ¼ Watt Resistor
P673	10,000 Ohm ½ Watt Resistor
P258	15,000 Ohm ¼ Watt Resistor
P186	25,000 Ohm ¼ Watt Resistor
P675	70,000 Ohm ¼ Watt Resistor
P139	250,000 Ohm ¼ Watt Resistor
P137	500,000 Ohm ¼ Watt Resistor
P162	1 Megohm ¼ Watt Resistor
P480	.0001 Mica Condenser
P147	.00025 Mica Condenser
P335	.01 Mfd. 400 Volt Condenser
P160	Elect. Condenser
P870	3 Gang Condenser
P617	Padding Condenser
P878	Pre Selector Coil
P857	1st I.F. Transformer
P858	2nd I.F. Transformer
P856	Oscillator Coil
P689	Power Transformer
P182	Output Transformer
P485	Choke
P859	Wave Change Switch
P660	Volume Control & "On-Off" Switch
P661	Tone Control
G728	Short Wave Antenna Coil
G729	Short Wave Oscillator Coil
P143	.02 Mfd. 400 Volt Condenser
P148	.05 Mfd. 200 Volt Condenser
P334	.05 Mfd. 400 Volt Condenser
P142	.1 Mfd. 200 Volt Condenser
P276	.1 Mfd. 400 Volt Condenser
P474	4 Mfd. 430 Volt Condenser
P672	.001 Mica Condenser
P478	.0012 Mfd. 200 Volt Condenser
P304	5 Mfd. Elect. Condenser
P733	12" Speaker Field Coil
P683	12" Speaker Cone & Voice Coil Assembly 12" Dynamic Speaker
P868	Dial Glass
P848	Dial & Scale—Complete
P834	Knob
P134	Pilot Light

©John F. Rider, Publisher

MODELS 130,134,146,190
Chassis L-6
Schematic, Voltage
Socket, Trimmers

SPIEGEL, INC.

1936

FOR ALIGNMENT
SEE INDEX

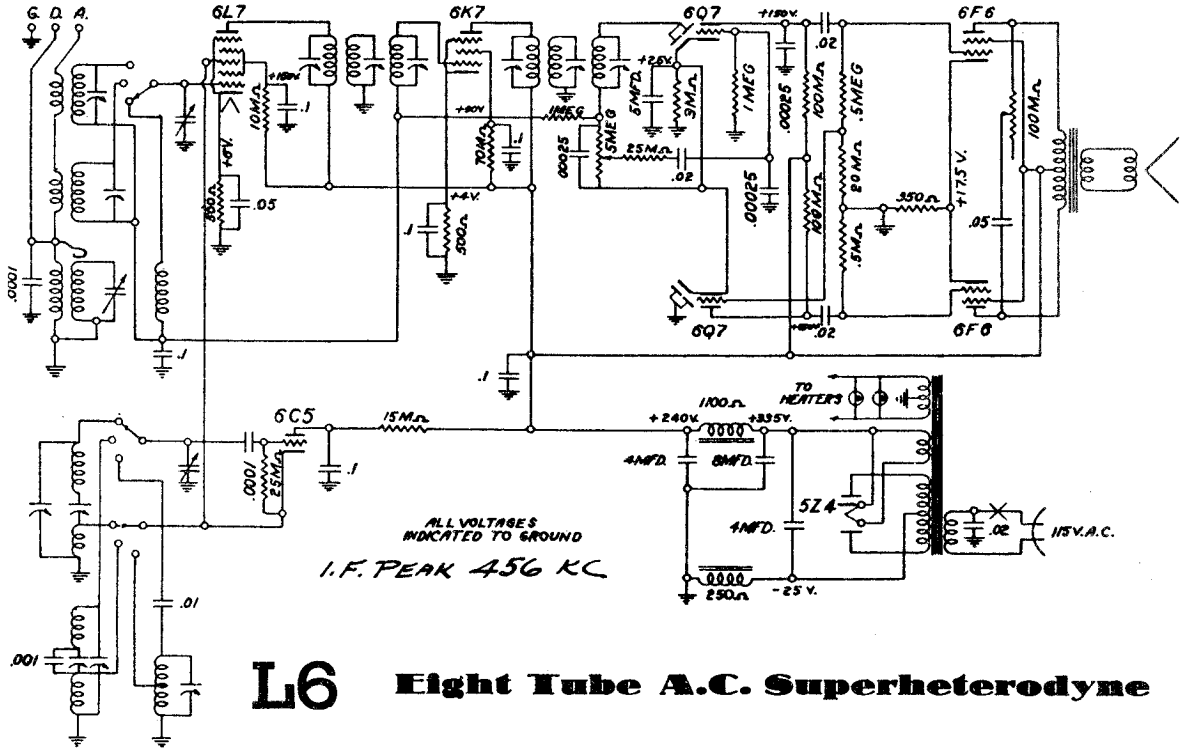

L6 Eight Tube A.C. Superheterodyne

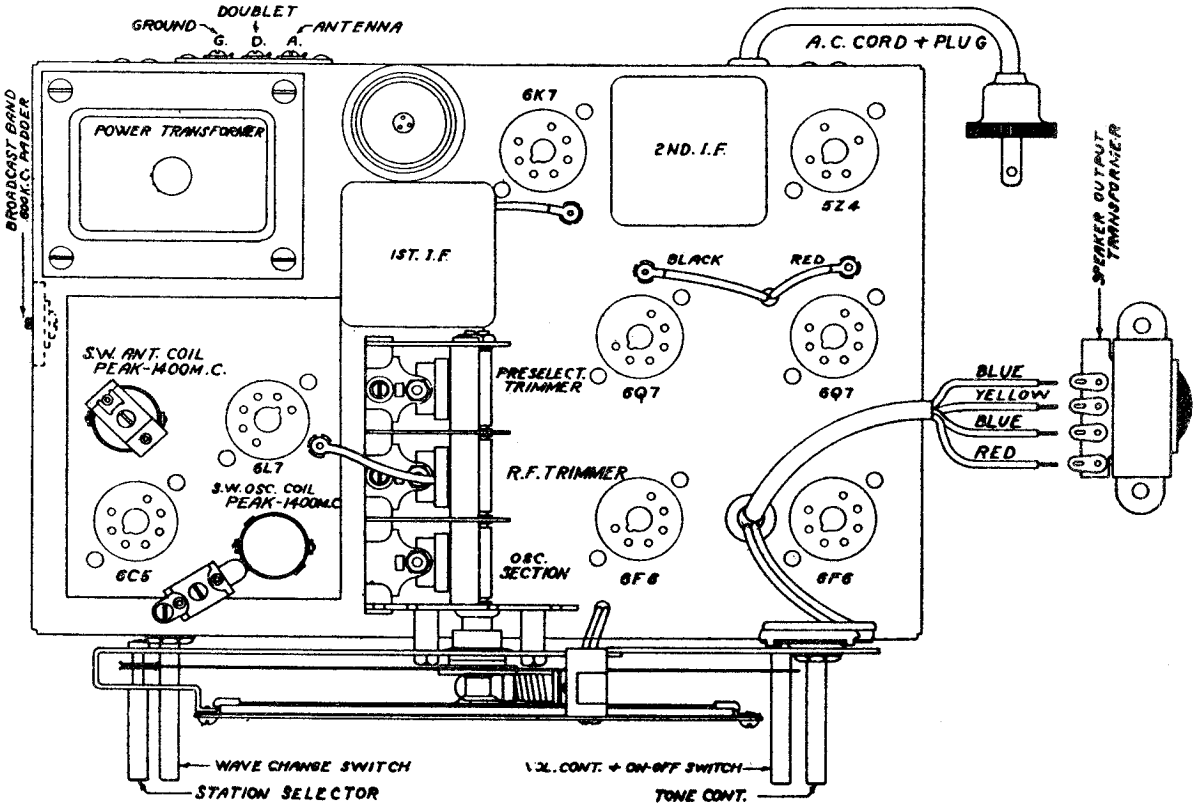

©John F. Rider, Publisher

MODELS 144,152,178
Chassis L-7
Schematic,Voltage
Socket,Trimmers

SPIEGEL, INC.

Seven Tube 6 Volt Battery All Wave Superheterodyne

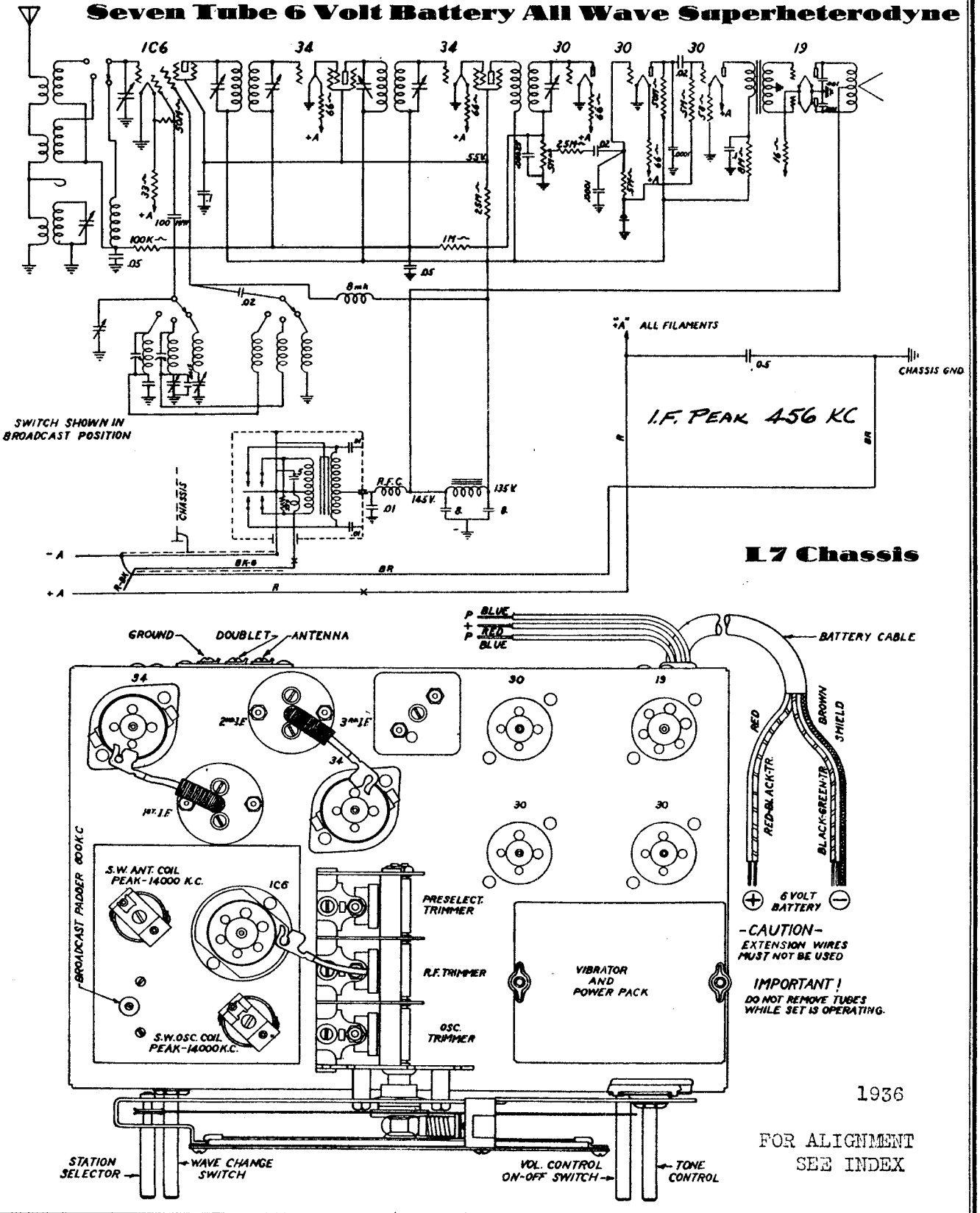

1936

FOR ALIGNMENT SEE INDEX

©John F. Rider, Publisher

SPIEGEL, INC.

MODEL 132
Chassis 58
Schematic, Voltage

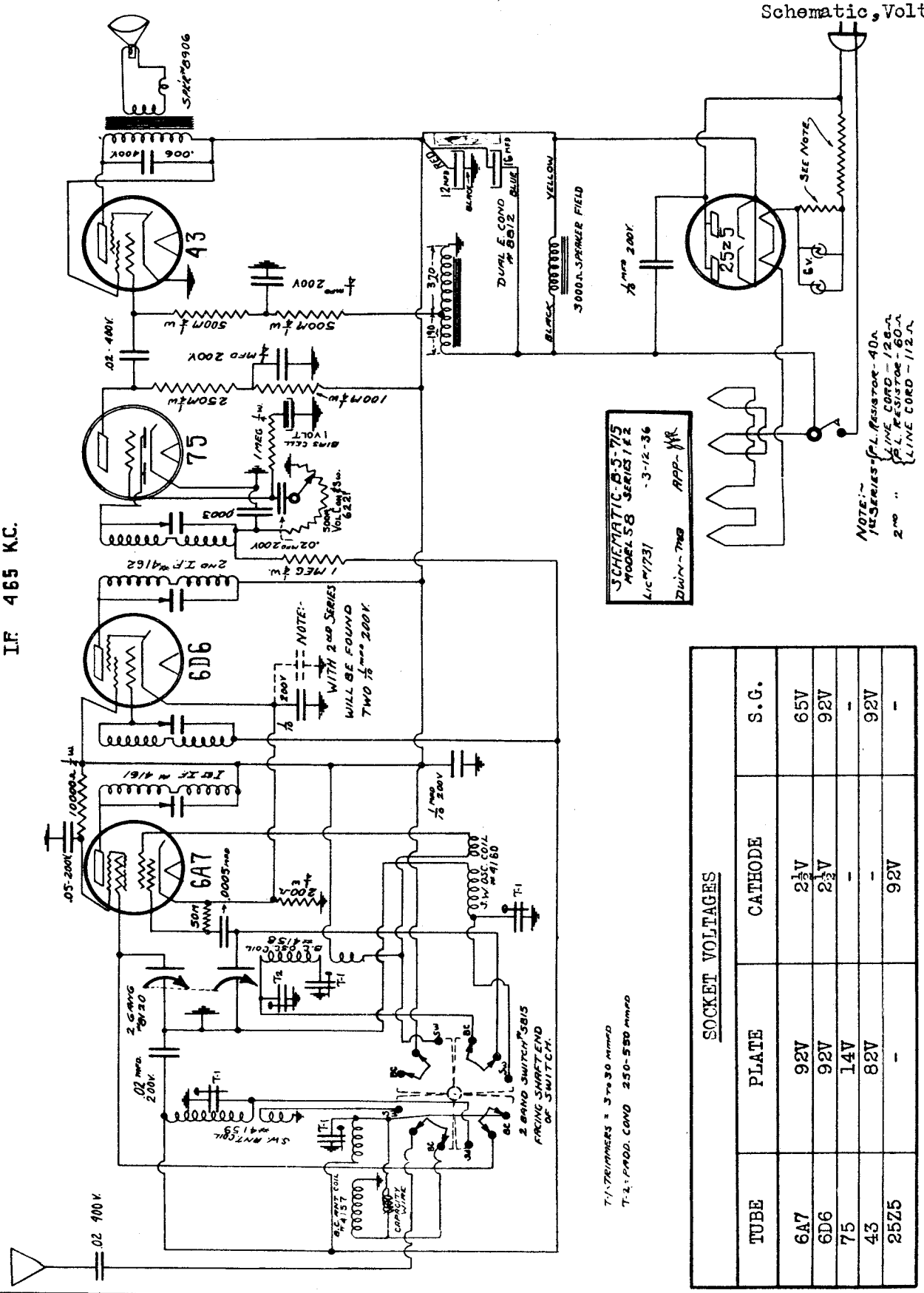

SOCKET VOLTAGES

TUBE	PLATE	CATHODE	S.G.
6A7	92V	2½V	65V
6D6	92V	2½V	92V
75	14V	-	-
43	82V	-	92V
25Z5	-	92V	-

Taken from ground with line voltage at 115 V.

©John F. Rider, Publisher

MODEL 132 SPIEGEL, INC. CO.

Chassis 58

Alignment, Socket Trimmers, Parts

THE ALIGNMENT PROCEEDURE

The following alignment instructions are given with the assumption that the service station has a signal generator capable of accurately covering the range of the receiver.

The only other apparatus necessary is a meter connected in the output stage to indicate resonance. This can be a 0 to 3 volt AC meter connected across the voice coil of the speaker or preferably an output meter connected in the plate circuit of the 42 power tube in series with an 8 MFD paper condenser.

The schematic circuit of the set will be found on the back side of the chassis.

1. THE I.F. STAGES

The I.F.'s are aligned by the usual system of feeding the intermediate frequency of 465KC into the grid of the 6A7 tube.

The two trimmers in each of the I.F. cans should be very carefully peaked to resonance as they are very critical and will greatly affect the performance of the set. These are trimmers number C1, C2, C3, C4. (See pictorial diagram).

The sensitivity of the I.F. stages will be 25 microvolts for a 50 milliwatt output.

Always use as low an output as possible from the signal generator in making the various adjustments.

2. ALIGNMENT OF SHORTWAVE BAND 5.5 TO 18 M.C.

First check the position of the dial hand by rotating the tuning knob to the left to full capacity. At this point the dial hand should be straight across in line with the lines dividing the scale in half. If the hand is off position it can easily be lined up by removing the dial glass to get at the screw holding the dial hand.

1. Turn wave band switch all the way to the right for the Short Wave Band.

2. Tune dial hand to 17 megacycles.

3. NOTE: FOR ADJUSTMENT AT 17 MEGACYCLES THE OUTPUT FROM THE SIGNAL GENERATOR MUST NOT BE COUPLED DIRECT TO THE ANTENNA LEAD OF THE SET. FOR TRUE ALIGNMENT STRETCH OUT THE RADIO ANTENNA LEAD IN SUCH A MANNER THAT IT WILL PICK UP THE SO CALLED "WILD" SIGNAL OF 17 MEGACYCLES EMITTING FROM THE GENERATOR. IT IS ALSO IMPORTANT THAT THIS SIGNAL ONLY BE STRONG ENOUGH TO JUST BE HEARD.

4. When the above set-up is arranged peak oscillator condenser C5 to the 17 megacycle weak signal.

5. After adjusting the oscillator trimmer, peak the S.W. antenna condenser C6 to 17 megacycles.

NOTE: After adjusting the short wave band at 17 megacycles, the signal generator output to antenna should be increased and receiver dial advanced to .9 megacycle lower and note if test oscillator signal is heard.

In case there is no response the oscillator trimmers have been pulled down too tightly. The trimmers should be released until this condition exists then go back to original point of alignment - reduce antenna input voltage and correct the trimmer adjustment.

EXAMPLE: The receiver has been adjusted to 17 megacycles. Tune receiver to approximately 16.9 MC.

Increase oscillator signal by "opening up" the attenuator. Move the dial back and forth at 16.9 MC.

If no signal is heard, let oscillator trimmer off until it is heard at 16.9 MC.

Reduce signal voltage from generator, go back to 17 MC and slightly correct this last trimmer adjustment.

3. THE BROADCAST BAND

1. Turn wave band switch all the way to left and dial hand set to 1400 KC (the top scale). The signal generator may be coupled direct to the antenna lead on this band, through a standard 200 MMFD Condenser.

2. Peak oscillator trimmer C7 to 1400 KC from the signal generator.

3. Peak antenna trimmer C8 to 1400 KC after adjusting oscillator.

4. Set dial hand to 550 KC and adjust oscillator padding condenser C9 to 550 KC.

5. Recheck dial at 1400 KC as in Section 1.

6. Points in the middle of the dial may be checked and if necessary the plates of the back section (oscillator) of the variable condenser may be bent for alignment.

4. NOTES

1. Seal all trimmers after their final adjustment.

2. Be sure that the settings are being made to the true fundamental signal from the oscillator and not on a harmonic or image frequency.

3. Refer to the chart included for the voltages at the tube sockets.

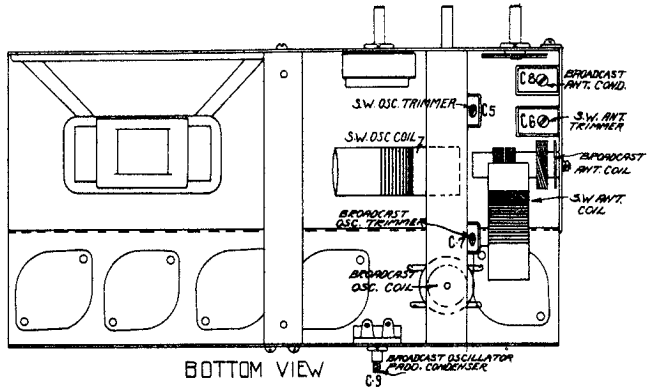

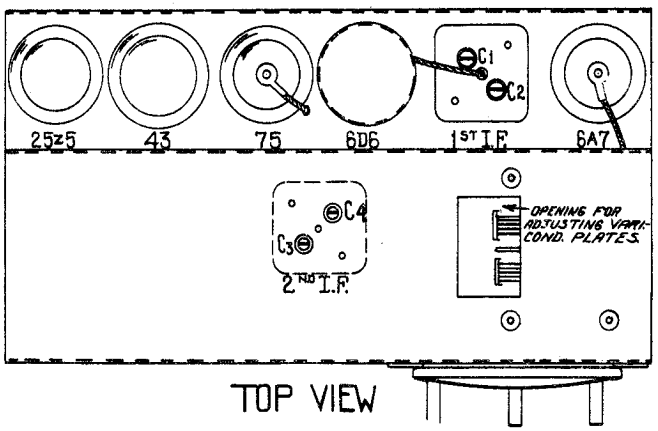

Part No.	PRICES SUBJECT TO CHANGE WITHOUT NOTICE Description	Price
7601	Bias Cell - 1 Volt	.20
4157	Coil - Antenna B.C.	.50
4158	Coil - Oscillator B.C.	.55
4159	Coil - Antenna S.W.	.40
4160	Coil - Oscillator S.W.	.40
4161	Coil - 1st. I.F. Complete with can and grid cap	.90
4162	Coil - 2nd. I.F. Complete with can and grid cap	.90
4530	Choke - 500 ohm, tapped at 190 ohms	1.00
5525	Cord - line, 125 ohms	.64
5527	Cord - line, 112 ohms	.64
8180	Condenser - variable, 2 gang	2.25
8612	Condenser - 16-12 Mfd. Electrolytic - 200 volt	1.00
8216	Condenser - Padding 250-550 Mmfd.	.20
3127	Condenser - Trimmer 5-30 Mfd.	.18
2219	Condenser - .1 Mfd. 200 Volt	.16
3513	Condenser - .02 Mfd. 200 Volt	.16
3517	Condenser - .02 Mfd. 400 Volt	.20
2183	Condenser - .05 Mfd. 200 Volt	.16
2475	Condenser - .25 Mfd. 200 Volt	.16
3515	Condenser - .006 Mfd. 400 Volt	.24
8304	Condenser - .0003 Moulded Mica	.12
3410	Condenser - .00005 Moulded Mica	.12
6221	Control - Volume and switch - 500M ohms	.92
4063	Dial card - calibrated	.35

Part No.	REPLACEMENT PARTS LIST	
4014	Dial hand and screw	.10
4057	Drive disc - 1/4" hub (yyrolin)	.30
4036	Dial glass	.15
7112	Knob - plain	.15
7113	Knob - coded (specify colors)	.17
1919-A	Lamp - dial - 6 volt (brown bead)	.12
2765	Resistor - 200 ohms - 1/4 Watt	.12
1845	Resistor - 10M ohms - 1/4 Watt	.12
3327	Resistor - 500K ohms - 1/4 Watt	.12
3355	Resistor - 250M ohms - 1/4 Watt	.12
3338	Resistor - 500M ohms - 1/4 Watt	.12
3561	Resistor - 1 Megohm - 1/4 Watt	.12
2362	Resistor - 40 ohm candohm	.20
2746	Resistor - 60 ohm candohm	.20
2747	Socket - 6 prong	.14
4020	Socket - 7 prong	.14
8906	Speaker - pilot light (slotted)	.14
5815	Socket - 5" - 5,000 ohms	3.75
6800	Switch - 8 band	.60
6801	Tube shield - base	.04
6802	Tube shield - shell	.06
3463	Tube shield - top	.04
	Wire - 20 Ft. antenna roll	.20

©John F. Rider, Publisher

SPIEGEL, INC.

MODELS 167,182,183
Chassis Z-5
Schematic, Socket
Trimmers

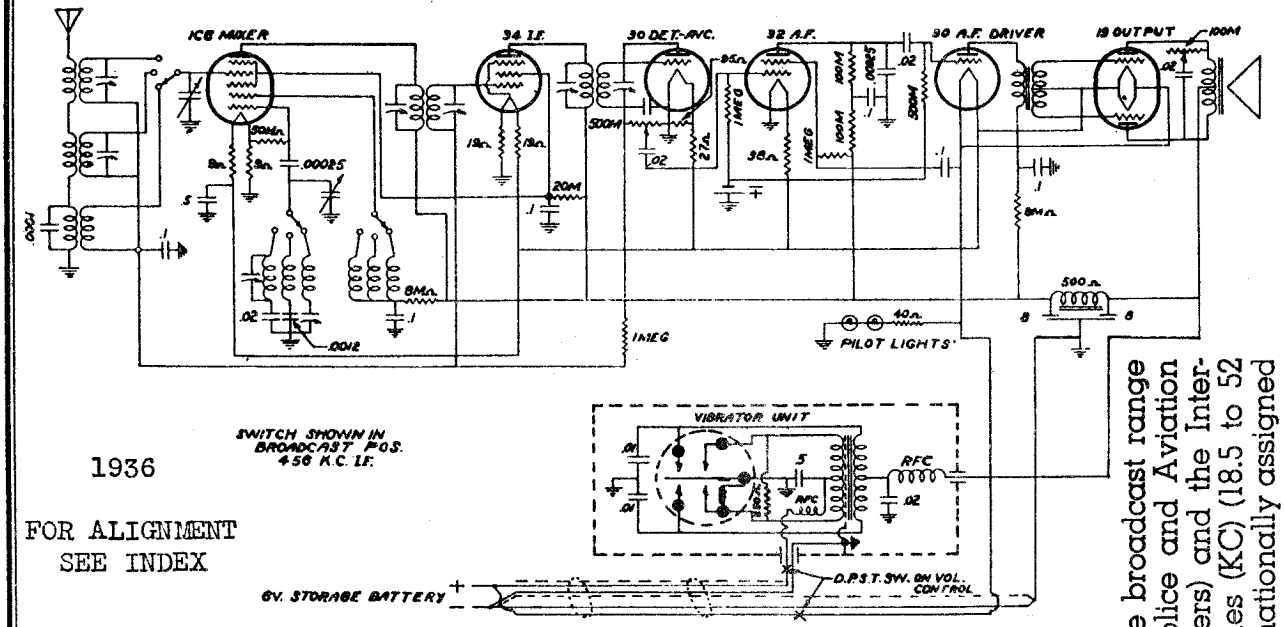

1936

FOR ALIGNMENT
SEE INDEX

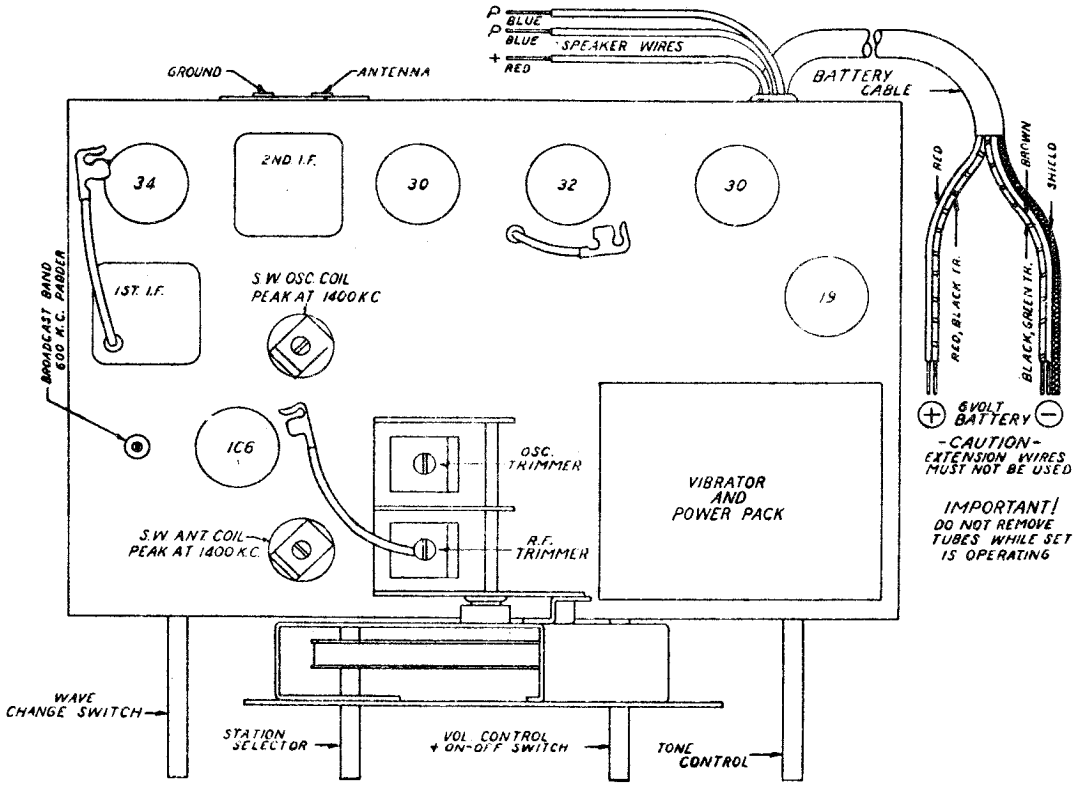

Six Tube 6 Volt Battery Superheterodyne
Z5 Chassis

This receiver is designed to operate over three tuning ranges. The broadcast range which extends from 545 to 1715 Kilocycles (KC) (175 to 550 meters), Police and Aviation Band which extends from 1715 to 5350 Kilocycles (KC) (56 to 175 Meters) and the International Short Wave Band which extends from 5760 to 16200 Kilocycles (KC) (18.5 to 52 meters). This short wave range is the one which includes the four internationally assigned bands—the 19, 25, 31 and 49 meter bands.

©John F. Rider, Publisher

MODELS 186,5300,6800
Chassis U-6
Schematic,Socket
Trimmers,Alignment

SPIEGEL, INC.

1936

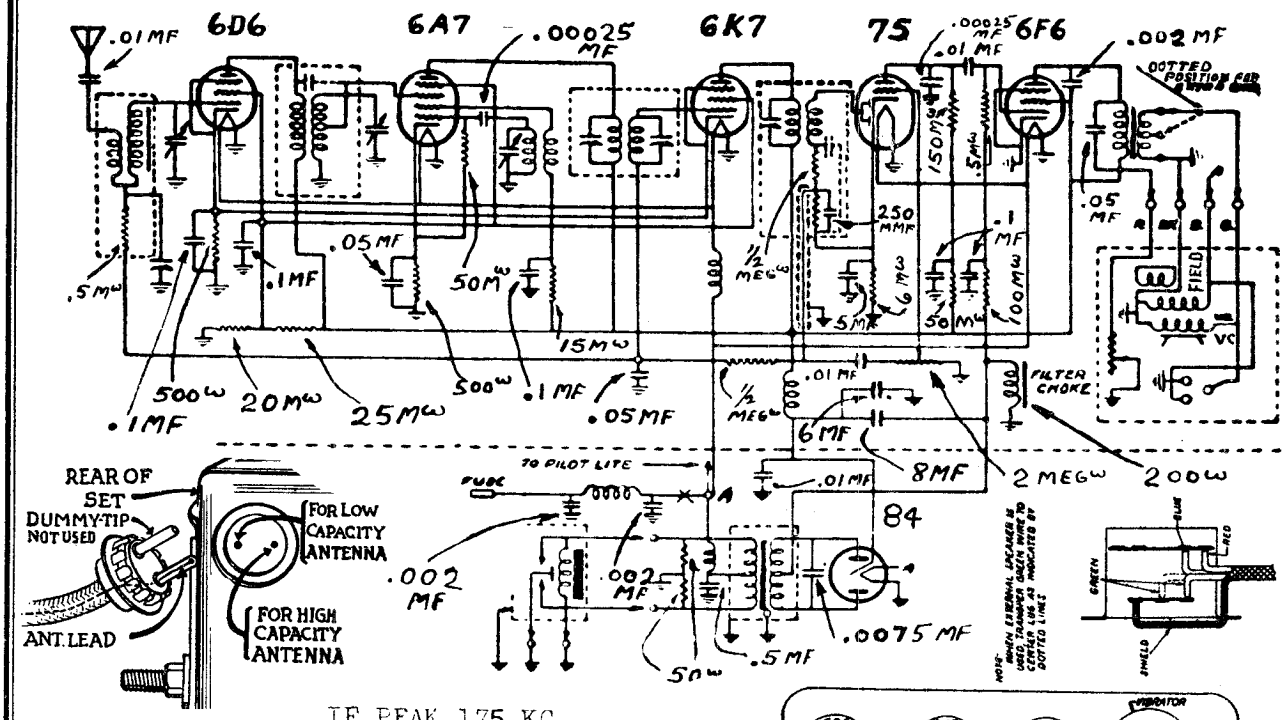

IF PEAK 175 KC.

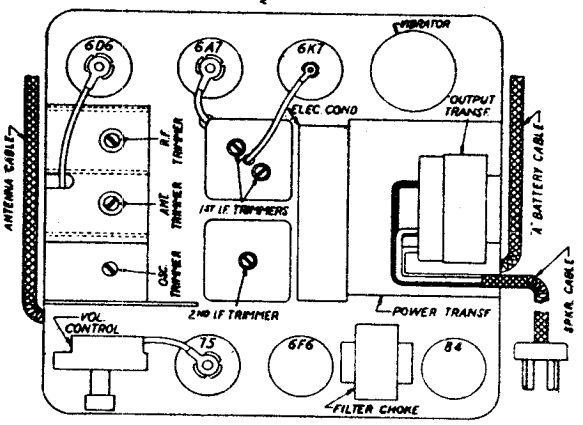

ALIGNMENT DATA AND SERVICING

GENERAL DATA The alignment of this receiver requires the use of a test oscillator that will cover the frequencies of 175, 600 and 1400 K.C., and an output meter to be connected across the primary or secondary of the output transformer. If possible, all alignment should be made with the volume control on maximum and the test oscillator output as low as possible, to prevent the AVC from operating and giving false readings.

CORRECT ALIGNMENT PROCEDURE The intermediate frequency (I.F.) transformers should be aligned properly as the first step.

I.F. ALIGNMENT Adjust the test oscillator to 175 K.C. and connect the output directly to the grid of the first detector tube (6A7), without the use of any series condenser or resistor; the omission of series condenser and resistor to block out the AVC action. The ground on the test oscillator can be connected to the chassis ground. Align the trimmers of the first and second I.F. transformers to peak or maximum reading on the output meter.

OSCILLATOR ALIGNMENT Adjust the test oscillator to 1400 K.C. and connect the output to the antenna through a .0001 mfd. mica condenser to give the equivalent of a low capacity type average auto antenna. Set the dial pointer to 1400 K.C. and adjust the oscillator trimmer to peak. (Front section of gang condenser.)

R.F. ALIGNMENT The next step is to adjust the center and rear trimmers of the gang condenser to peak. The center section of the gang condenser tunes the R.F. antenna amplifier stage (6D6 tube), and the rear condenser section tunes the detector grid coil of the 6A7 tube.

LOW FREQUENCY PADDING Next, reset the dial pointer on the control head and the test oscillator to 600 K.C., adjust the antenna compensator condenser to peak. This adjustment is best reached from the bottom of the chassis and the location of the condenser will be found near the volume control.

The adjustment of the antenna compensator should again be gone over after the auto set has been again installed in the car, to compensate for the difference that may exist in the capacity of the car antenna and the .0001 mfd. capacitor used with the test oscillator.

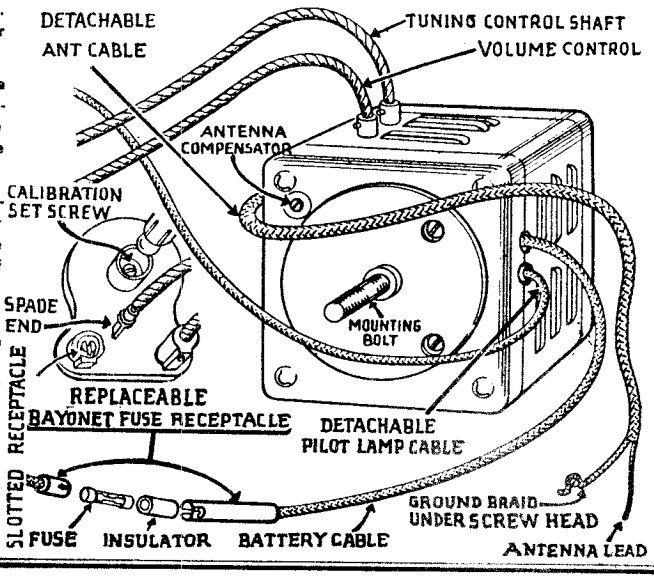

©John F. Rider, Publisher

©John F. Rider, Publisher

SPIEGEL, INC.

MODELS 150,188,1910
Chassis 37-B
Schematic, Parts
Alignment

1935

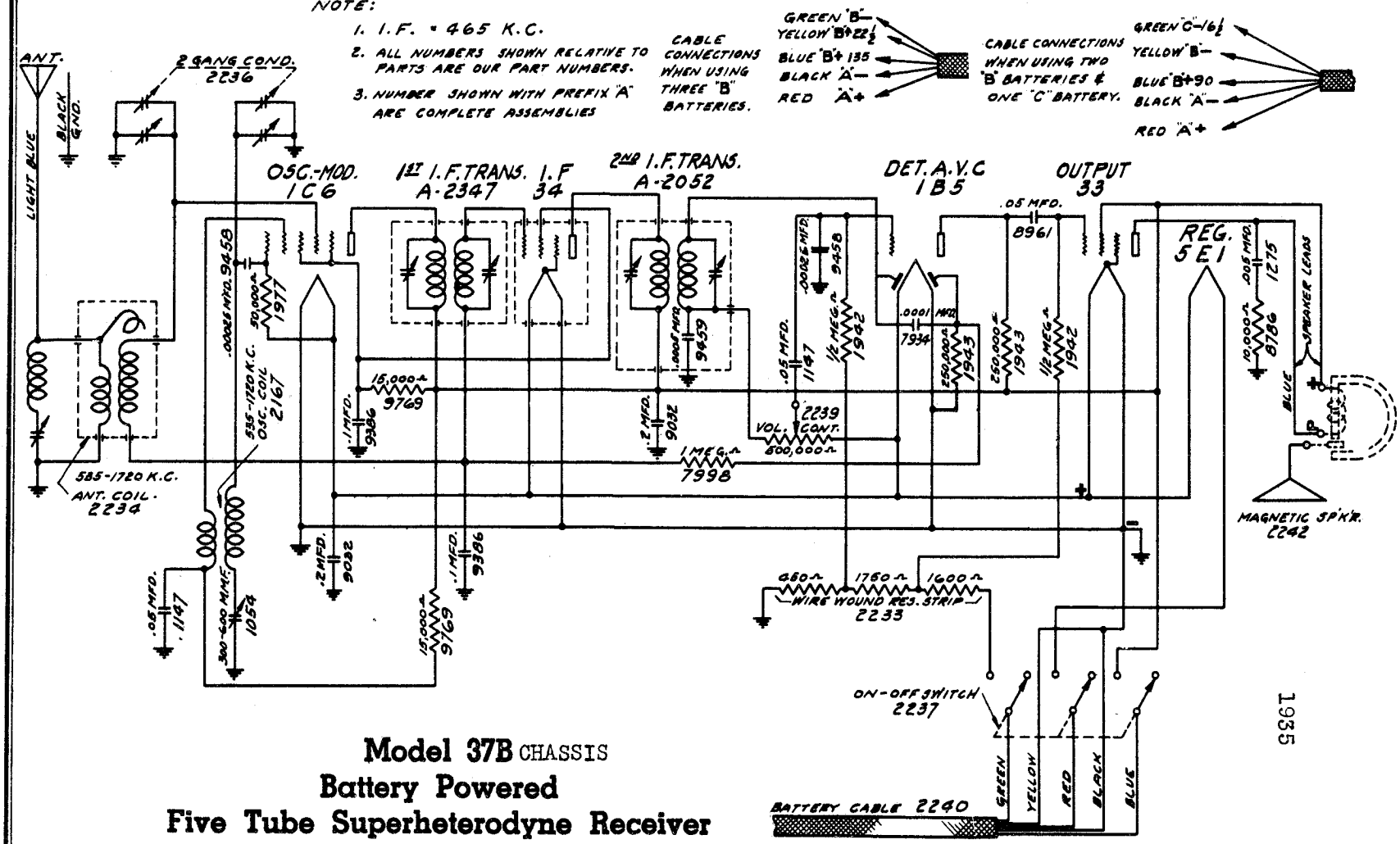

Model 37B CHASSIS
Battery Powered
Five Tube Superheterodyne Receiver

FREQUENCY RANGE - 1720 to 535 KC.

CONVENTIONAL ALIGNMENT - see special section.

Peak IF transformers at 465 KC. BROADCAST BAND - Dial and generator to 1715 KC, trim oscillator to maximum peak. Dial and generator to 1400 KC, adjust antenna trimmer to maximum peak. Dial and generator to 600 KC, pad oscillator circuit to maximum peak. (BOTTOM OF CHASSIS, REAR)

(REAR SECT)

Adjust antenna wave trap at 465 KC. (BOTTOM OF CHASSIS, WITH COIL ON IT)

MODELS 2000,2001
2050,2051
Chassis 6-W

SPIEGEL, INC.

Schematic, Socket
Trimmers, Parts
Alignment

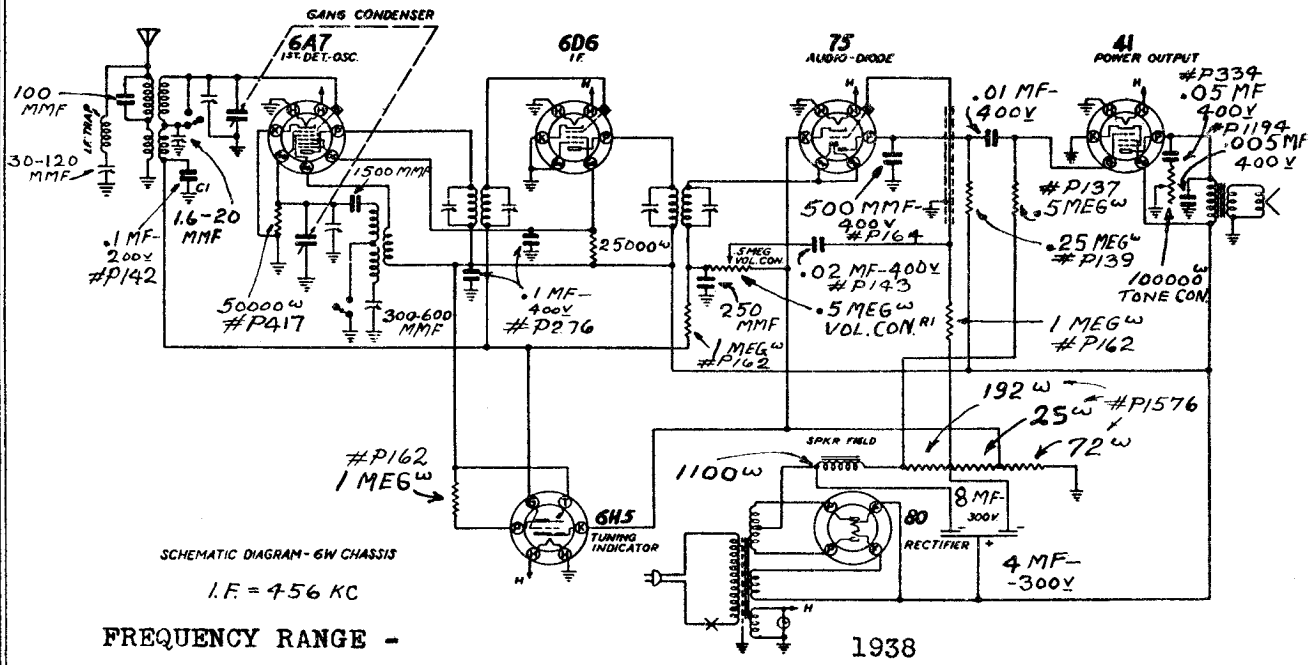

FREQUENCY RANGE -
535 to 1750 KC
5600 to 18100 KC

1938

CONVENTIONAL ALIGNMENT. SEE SPECIAL SECTION VO. VIII

6 Tube AC Superheterodyne
6W Chassis

P1368	4 Prong Socket
P1277	Type 41 Socket
P521	Type 75 Socket
P492	Type 80 Socket
P506	Type 6A7 Socket
P536	Type 6D6 Socket
P617	Padding Condenser
P1576	Candohm Resistor
P1577	Trimmer Cond. with Bracket
P1578	Gang Condenser
P1663	Dial Pointer
P1641	Dial Scale
P1642	Tone Control
P334	.05 Mfd. 400V Condenser
P1643	Escutcheon
P1672	Selector Knob
P1673	Tone Knob
P1674	Volume Knob
P1675	Band Switch Knob
P166	25,000 Ohm ¼ Watt Resistor
P417	50,000 Ohm ¼ Watt Resistor
P162	1 Megohm ¼ Watt Resistor
P139	250,000 Ohm ¼ Watt Resistor
P137	500,000 Ohm ¼ Watt Resistor
P817	.00025 Mfd. Mica Condenser
P336	.005 Mfd. Mica Condenser
P1194	.005 Mfd. 400V Condenser
P142	.1 Mfd. 200V Condenser
P164	.01 Mfd. 400V Condenser
P276	.1 Mfd. 400V Condenser
P916	1st I.F. Transformer Coil
P1579	Volume Control and Switch
P143	.02 Mfd. 400V Condenser
P1580	Band Change Switch
P1581	Oscillator Coil
P1582	Antenna Coil
P1557	Riveted Mica Condenser
P1503	Pilot Light Socket
P1504	Pilot Light Bulb
P914n	Power Transformer
P929	AC Cord and Plug
P1591	Elec. Condenser
P917	2nd I.F. Transformer
P1455	Tube Shield
P1645	Magic Eye Socket & Cable Assembly
P1574	.0015 Mica Condenser

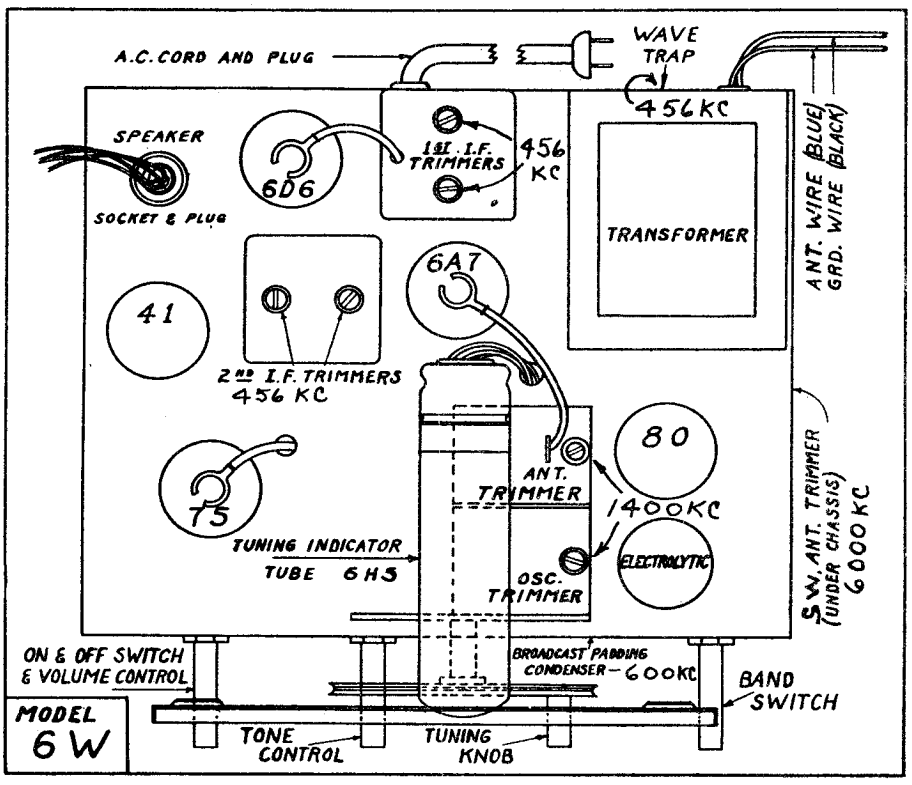

©John F. Rider, Publisher

SPIEGEL, INC.

MODELS 2058,2059(1938)
4054(1937)
Chassis 11-S
Schematic,Socket,Parts
Trimmers

IF PEAK 456 KC

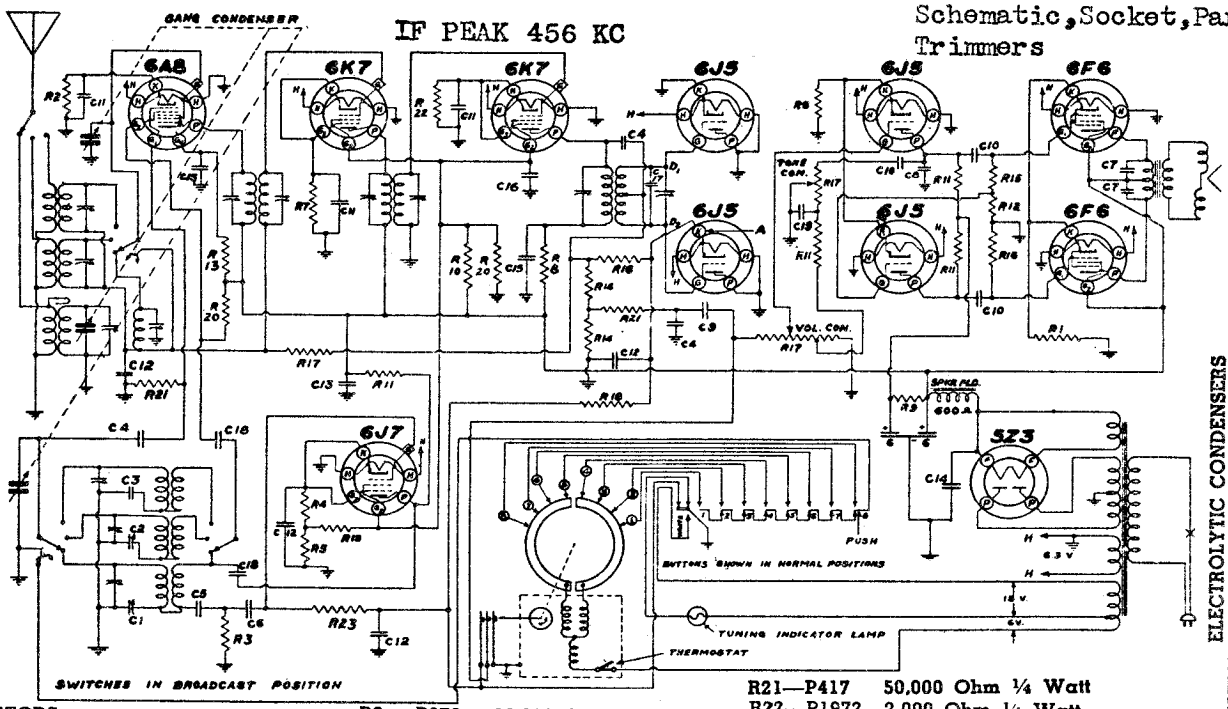

ELECTROLYTIC CONDENSERS
C14—P1937 .25 Mid. Wet Electrolytic
P1939—Dual 6 Mid. 450 W. V.

RESISTORS

R1 —P1818	210 Candohm Resistor 10% Tolerance	
R2 —P1942	250 Ohm ¼ Watt 10% Tolerance	
R3 —P1950	350 Ohm ¼ Watt 10% Tolerance	
R4 —P279	500 Ohm ¼ Watt	
R5 —P1951	650 Ohm ¼ Watt 5% Tolerance	
R6 —P1729	750 Ohm ¼ Watt	
R7 —P1973	1,000 Ohm ¼ Watt 10% Tolerance	
R8 —P1216	5,000 Ohm ¼ Watt	
R9 —P673	10,000 Ohm ½ Watt	
R10—P1944	15,000 Ohm 2 Watt	
R11—P166	25,000 Ohm ¼ Watt	
R12—P1943	35,000 Ohm ¼ Watt 10% Tolerance	
R13—P1952	50,000 Ohm ½ Watt	
R14—P139	250,000 Ohm ¼ Watt	
R15—P1843	455,000 Ohm ¼ Watt 10% Tolerance	
R16—P137	500,000 Ohm ¼ Watt	
R17—P162	1,000,000 Ohm ¼ Watt	
R18—P310	4,000,000 Ohm ¼ Watt	
R19—P1949	15,000 Ohm ½ Watt	
R20—P165	25,000 Ohm 1 Watt	
R21—P417	50,000 Ohm ¼ Watt	
R22—P1972	2,000 Ohm ¼ Watt 10% Tolerance	
R23—P280	100,000 Ohm ¼ Watt	

PAPER CONDENSERS

C3 —P1947	.004 Mfd. 400 V.	
C7 —P904	.002 Mfd. 600 V.	
C9 —P164	.01 Mfd. 400 V.	
C10—P334	.05 Mfd. 400 V.	
C11—P148	.05 Mfd. 200 V.	
C12—P142	.10 Mfd. 200 V.	
C13—P1789	.25 Mfd. 400 V.	
C15—P276	.10 Mfd. 400 V.	
C16—P141	.25 Mfd. 200 V.	
C18—P1193	.002 Mfd. 400 V.	

MICA CONDENSERS

C4 —P480	.0001 Mfd.	
C5 —P1044	.0002 Mfd.	
C6 —P672	.001 Mfd.	
C8 —P336	.0005 Mfd.	
C17—P1044	.0002 Mfd. 5% Tolerance	
C19—P1683	.004 Mfd.	

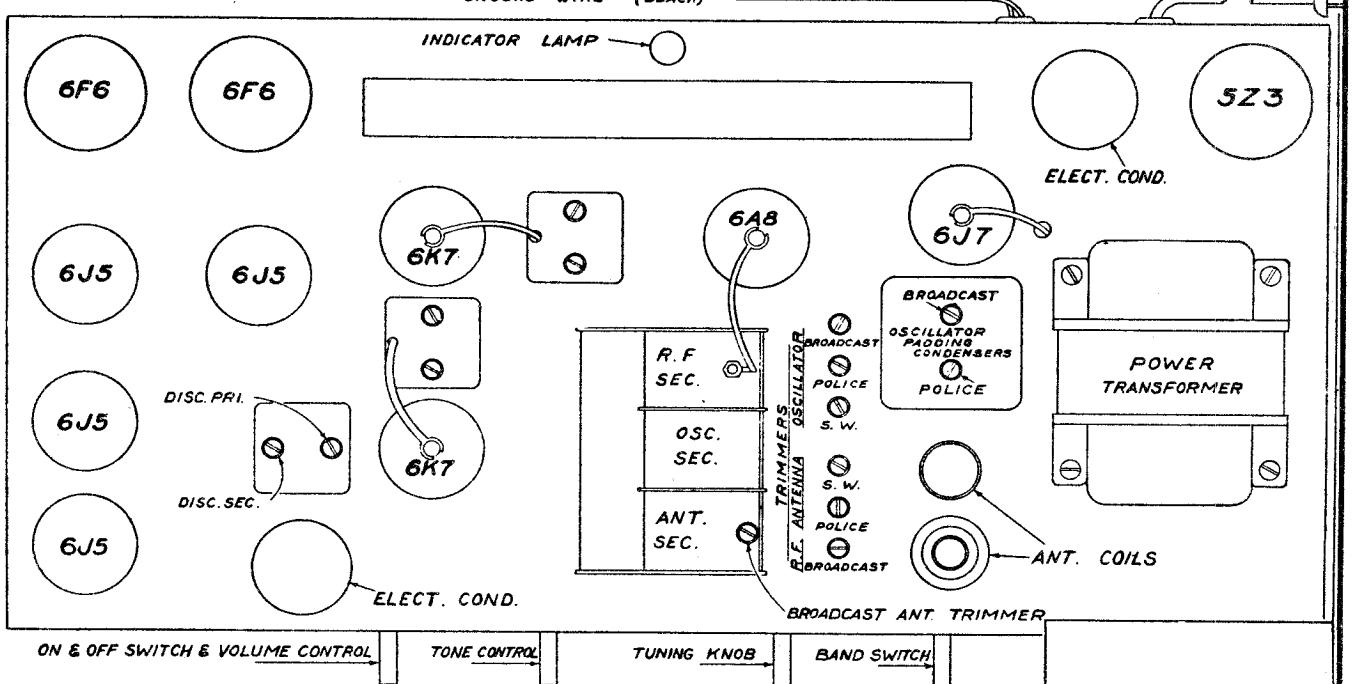

©John F. Rider, Publisher

MODELS 2058,2059,4054
Chassis 11-S
Alignment,Notes

SPIEGEL, INC.

ALIGNMENT DATA AND SERVICING

GENERAL DATA The alignment of this receiver requires the use of a test oscillator that will cover the frequencies of 456, 600, 1400, 1730, 1800, 4000, 5600, 6000, 16,000 and 18,100 KC and an output meter to be connected across the primary or secondary of the output transformers. If possible, all alignments should be made with the volume control on maximum and the test oscillator output as low as possible, to prevent the AVC from operating and giving false readings.

CORRECT ALIGNMENT PROCEDURE The intermediate frequency (I.F.) stage should be aligned properly as the first step. After the I.F. transformers have been properly adjusted and peaked, the Broadcast Band should always be the next procedure, after which, either or both of the Short Wave Bands may be aligned.

I.F. ALIGNMENT With the wave switch in the Broadcast Band and the gang condenser set at minimum push in the white button until it locks. Adjust the test oscillator to 456 KC and connect the output to the grid of the first detector tube (6A7) through a .05 or .1 mfd. condenser. The ground on the test oscillator can be connected to the chassis ground. Align the first four I.F. trimmers to peak or maximum reading on the output meter.

After the first two I.F. transformers have been tuned, the discriminator transformer should be aligned. This is a critical adjustment and must be performed with care.

First — connect a 0-200 micro ammeter between the ungrounded cathode of the 6J5G tube serving as a diode rectifier, and ground. This cathode is indicated as point "A" in the circuit diagram. Then place a .0001 mfd. mica condenser across the secondary of the discriminator transformer. These terminals are indicated as points "D1" and "D2" on the circuit diagram. This condenser is used to detune completely the secondary circuit during the following primary adjustment.

The primary is tuned by impressing an I.F. signal on the convertor (6A8-G) grid and adjusting the trimmer marked "DISC. PRI." on the chassis layout diagram, to give maximum audio output. Signal strength should be the same as in an ordinary aligning operation. For this particular receiver about 30-micro volts of I.F. signal is required for standard output. (50 milliwatts). At this point it would be well to go over the adjustments of the two other I.F. transformers and bring the entire system to maximum sensitivity. Now without further adjustments of either the frequency setting of the signal generator or the I.F. transformer trimmers the "DISC. SEC." trimmer should be tuned.

After removing the .0001 mfd. mica condenser from the 6J5G grids "D1 and D2" increase the I.F. signal input to the maximum that the signal generator will supply (at least 100,000 micro volts). Then, with the volume control turned down to limit the audio output, slowly turn the "DISC. SEC." trimmer until a sudden, sharp drop in current as indicated by the micro ammeter is seen. The meter will now probably read in reverse and off scale. The trimmer should be reversed and the meter reading brought to zero. If a metallic screw driver is used it will be necessary, continually, to lift the screw driver away from the trimmer screw after each slight adjustment to observe the meter reading.

It is sometimes convenient to use an offset of "remote zero" setting of the micro ammeter in making this adjusiment so that the zero current setting is higher on the scale than the conventional zero point.

After the current has been brought to zero by the above described method the I.F. alignment and discriminator tuning is completed and the R.F. tracking may be done.

BROADCAST BAND ALIGNMENT Connect the output of the signal generator to the antenna lead (blue) through at .0002 mfd. mica condenser. Set the gang condenser to minimum and the oscillator to 1730 KC and adjust the "oscillator trimmer" to receive this signal. Make no other adjustments at this frequency. Then set the generator to 1400 KC and tune in this signal by rotating the gang to 1400 on the dial. Adjust the "preselector" and "antenna" trimmer to maximum signal. Set the signal generator to 600 KC and tune in the signal on the receiver. **Note:** approximately the same sensitivity should be noted at this point as was at 1400 KC. The signal strength may sometimes be improved by padding the circuits. This is done by slowly increasing or decreasing the oscillator padding condenser and, at the same time, continuously tuning back and forth across the signal with the receiver until the maximum reading is obtained on the output meter. This adjustment may seem a little complicated but is the easiest way to adjust the oscillator to the preselector of the R.F. section. Return to 1400 KC and again go over the adjustments of this frequency to be certain that they were not put slightly out of alignment when adjustment was made at 600 KC.

POLICE BAND ALIGNMENT The police band is adjusted by first replacing the .0002 dummy with a 400 ohm resistor and setting the generator to 5600 KC. With the gang set at minimum, adjust the "police oscillator trimmer" to receive this signal, then set the signal generator to 4000 KC and adjust "police antenna trimmer" to give maximum output. Next, set the oscillator to 1800 KC and "pad" the circuit of this frequency as described in the instructions for padding the broadcast circuits.

SHORT WAVE BAND ALIGNMENT The short wave band is adjusted by setting the generator to 18,100 KC and with the gang at minimum, adjust the "short wave oscillator trimmer" to receive the signal. Set the generator at 16,000 KC, tune in the signal and adjust the "short wave antenna" trimmer to give maximum output. As there is no variable low frequency padding condenser on this band, the sensitivity of the receiver should be checked at 6000 KC to determine whether the circuits are in line at this frequency. Should the receiver lack sensitivity at 6000 KC, the antenna and oscillator coils, as well as the .004 mica padding condenser, should be tested for defects as sometimes these components become subject to mechanical or electrical injuries, despite their rugged construction and liberal ratings.

CONTROLS AND OPERATION

RIGHT HAND KNOB **(Three Position Wave Band Selecting Switch)**—Turned to the right, it is set for Standard Broadcast Band; turned to the extreme left, it is set for Foreign and American Short Wave Reception; when in the center position, it is set for reception of Police, Aviation, Amateurs, and Ships at Sea.

SHORT WAVE TUNING

When tuning short wave stations, the selector knob must be turned more slowly and carefully, due to the sharp selectivity of the receiver in these bands. If you tune rapidly, many stations will be skipped entirely. When a response is heard, work the dial a little from left to right until you hit a point where the station comes in at maximum volume. This critical tuning is necessary if results are to be expected. It may require a little patient experimenting to become accustomed to short wave tuning. The use of a short wave "log" will be of great assistance in picking up short wave stations. Such logs are available from any of the leading radio magazines. They list the location, frequency and operating time schedules of short wave stations all over the world.

LEFT HAND KNOB **(Manual Volume Control and "On-Off" Switch**—Turn the left hand knob to the extreme right. The switch will click and the dial will become illuminated. Wait about one-half minute for the tubes to become heated.

LEFT CENTER KNOB **(Continuous Variable Tone Control**—The tone control permits tonal regulation to meet individual musical taste. When turned completely to the right the normal proportion of high to low notes is obtained. Upon turning the control from the extreme right position toward the center a gradually increasing emphasis of the low notes is noted. Further, increase in this direction serves to eliminate the more extreme "highs" which result in a greater apparent bass increase. A very useful application of this particular type of tone control is its ability to compensate for apparent lack of base at low volume levels. If when listening to a musical program at a low volume level the tone control is set at a position half way between its extreme settings a very pleasing effect is obtained.

©John F. Rider, Publisher

SPIEGEL, INC.

MODELS 2058, 2059, 4054
Chassis 11-S
Electric Tuning Data

11S Chassis

INSTRUCTIONS FOR ADJUSTMENT AND OPERATION OF THE ELECTRIC TUNER

It is very important to read the following instructions carefully before attempting to adjust the electric tuner.
The electric tuner is made up of three integral units:

PUSH BUTTON SWITCH: The push button switch consists of one (1) white button (extreme left), and eight (8) brown buttons whose numerical sequence is reckoned from left to right. The white button is provided for converting the set from automatic electric push button tuning to manual knob tuning. The brown buttons are provided for automatic electric tuning.

SELECTOR MECHANISM: The selector mechanism is made up of the selector plate, eight (8) thumb screws, and the adjustment light bulb.

ELECTRIC MOTOR: The power for this tuner is provided by a small, efficient electric motor, of the brushless variety. It is fitted with an automatic clutch and a silent gear train. The bearings and the oil retainer hold sufficient oil to lubricate the motor for a lifetime.

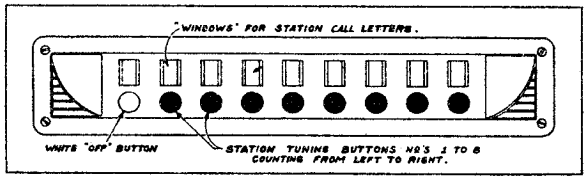

Fig. 1

The first step to take in adjusting the electric push button device incorporated into this receiver is to choose eight (8) of the most powerful local stations, stations which are free from excess fading. Turn on the receiver (broadcast band) and press in the white button; tune in the station of the **lowest frequency,** using the station selector knob. Now hold the white button in and press in button number one (1), next to the white button. (See Figure 1). Both buttons are now locked into place; a small pilot lamp located at the rear of the chassis will light up unless the thumb screw at the rear accidently happens to be correctly set. Loosen thumb screw number one (See Figure 2 for order of thumb screws) enough to allow it to slide freely back and forth until the light goes out. Now tighten the thumb screw; the adjustment for the first station is now complete. Out of the station call letter sheet supplied remove the proper station call block and insert into the window directly above button number one. Now release button number one by pressing the white button in as far as it will go.

With the white button still in, tune in the station of the next highest frequency and holding the white button, press in button number two. Both buttons are now locked into place. Loosen thumb screw number two (see Figure 2) and slide back and forth until a point is reached at which the pilot lamp in the rear goes out; tighten the thumb screw. Insert the proper station call into the window of button number two.

Follow this same procedure for the remaining stations, always choosing the station with the next highest frequency. After all eight (8) stations have been adjusted, check each adjustment by tuning in each station. Note: In the window above the white button insert the word "OFF" found in the call letter sheet.

HOW TO TUNE IN STATIONS USING THE ELECTRIC PUSH BUTTON TUNER

In order to operate the receiver satisfactorily—using the electric push button tuner, the white button must be in released position, that is, all the way out. To tune in a station, merely press the selector button which designates the station desired. **Note:** Should the station fail to come in clearly, check the adjustment by following the adjustment procedure described in the paragraph above. If by chance all of the buttons are pressed in, they may be released by pressing any one button all the way in.

To change from electric tuning to manual selecting, simply press in the white button. When the white button is in, the set may be tuned as a conventional receiver. **Note:** If it is desired to tune Short Wave or Police while the set is being operated with push buttons, it is not necessary to change over from push button tuning to manual tuning. Simply turn the band switch and proceed to tune with the selector knob. When the band switch is returned to broadcast the station last selected by button will automatically tune in by itself.

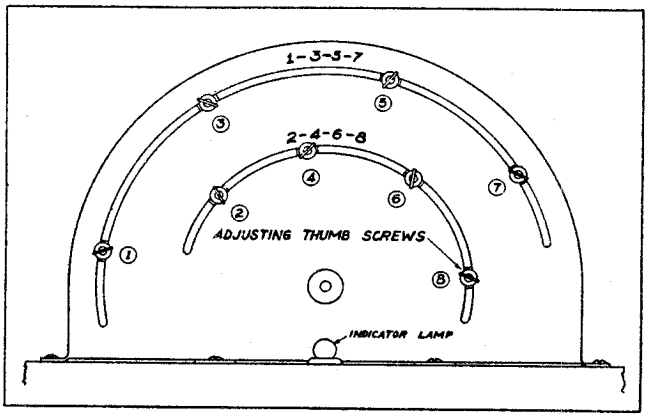

Fig. 2

NOTE: The white push button must be pressed in, in order to tune the set manually.

RIGHT CENTER KNOB **(Station Selector)**—Rotate the indicator needle slowly over a narrow range of the dial at a point where the desired station is located, until the station is received with maximum volume; then re-adjust the volume control to the proper level. **Never** use the station selector to adjust volume as this practice results in distorted tone quality and deficient bass response. The Volume Control **only** is to be used for this purpose. For maximum clarity the indicator needle should be adjusted to the center of the area covered by the station being tuned.

©John F. Rider, Publisher

MODELS 2080, 2081
Chassis 147(1938)
MODELS 5006, 5052, 6544, 6568
Chassis 14-127ES(1936)

SPIEGEL, INC.

Schematic, Socket, Trimmers
Alignment, Parts

©John F. Rider, Publisher

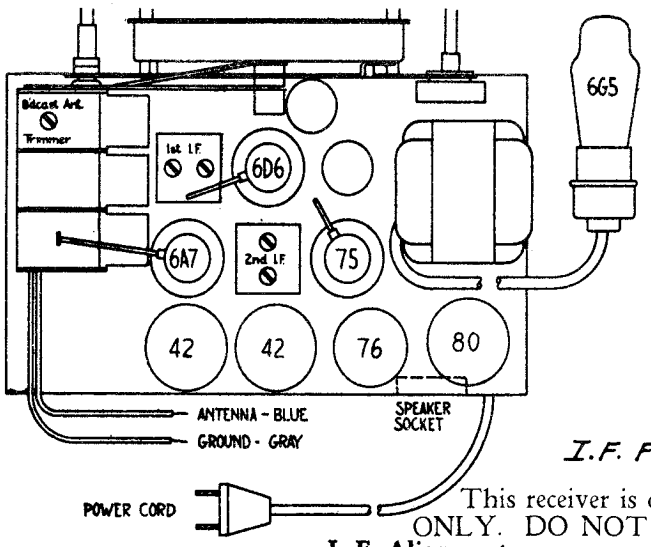

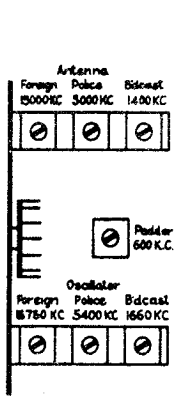

I.F. PEAK 456KC

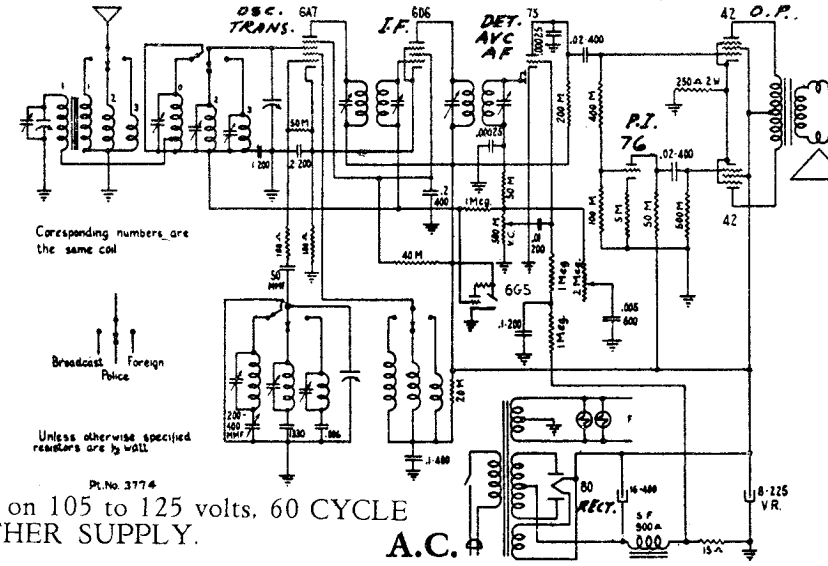

This receiver is designed to work on 105 to 125 volts, 60 CYCLE ONLY. DO NOT USE ANY OTHER SUPPLY.

A.C.

I. F. Alignment

The I.F. frequency of this receiver is 456 K.C. For realignment, use the following procedure.

It is necessary to use an accurately calibrated signal generator. Couple the signal generator to the grid of the 6A7 tube with a tenth microfarad condenser in series with the "high" lead of the signal generator. Connect the ground side of the signal generator to the chassis. Set the signal generator to 456 K.C. Be sure the wave switch of the set is in the broadcast position and the volume control set at maximum. Attenuate the signal generator so that the signal is just audible in the speaker. If an ouput meter is used, it should be connected across the voice coil terminals of the speaker. Use ½ volt as standard output.

Adjust the 2nd I.F. transformer first. Each screw should be adjusted for maximum output. After number two I.F. has been adjusted, number one I.F. should be adjusted for maximum output. After both transformers have been adjusted, it is necessary to recheck No. 2 transformer and then recheck No. 1.

See TUBE LAYOUT for location of I.F. and R.F. trimmers and padder.

R.F. (See above diagram for location of trimmers.) Using 200 mmf condenser in series with the generator, feed 1660 kc to antenna lead and adjust broadcast oscillator trimmer for top frequency. Set generator to 1400 kc, tune receiver and adjust the *two* antenna trimmers. Set generator to 600 kc, tune receiver to signal and adjust padder. The tuning condenser should be rocked back and forth through the signal while the padder is being set in order to secure perfect alinement.

Using 400 ohm resistor in series with generator, set band selector in center position, set generator to 5400 kc and adjust oscillator trimmer for top frequency. Set generator to 5000 kc, tune receiver to signal and adjust antenna trimmer.

Turn band selector to extreme clockwise position. Using 400 ohm resistor in series with generator, set oscillator top frequency for 15,750 kc—screw trimmer down tight, then unscrew to *second* peak. Set generator to 15,000 kc, tune receiver to signal and adjust antenna trimmer—Screw trimmer down tight, then unscrew to *first* peak, rocking the tuning condenser back and forth through the signal while the adjustment is being made. **Above procedure for alinement at 15,000 kc must be followed exactly to insure proper tracking. A dead spot at about 12,000 kc will result if antenna and oscillator circuits are not set in proper relation to each other.**

Part No.	Req.	Description
2163		Cable, Drive, Approx. 20"
3351	1	Cond. 8 MF. 225 V. Reg. Wet El.
3774		Schematic Diagram
3775		Tube Sticker
2560	1	Condenser, Padder
2597	4	Condenser, Trimmer, 1-10
1611	1	Condenser, Trimmer, 5-35
3157	1	Condenser, Trimmer
1286	1	Condenser, Mica, .00025
2780	1	Condenser, Mica, .00005
2741	1	1 Condenser, Mica, 1330
2872	1	Variable Condenser
576	2	Condenser, .02, 400 V., Paper
572	2	Condenser, .1, 200 V., Paper
565	1	Condenser, .01, 200 V., Paper
581	1	Cond., .005, 600 V., Paper
2792	1	Condenser, .2, 200 V., Paper
2793	1	1 Cond., .006, 600 V., Paper
3352	1	Condenser, .2, 400 V., Paper
575	1	Condenser, .1, 400 V., Paper
624	2	Resistor, 1/3 W., 1 Meg.
2731	1	Resistor, 1/3 W., 500 M.
2730	1	Resistor, 1/3 W., 200 M.
631	2	Resistor, 1/3 W., 50 M.
617	1	Resistor, 1/3 W., 20 M.

Part No.	Req.	Description
3353	1	Resistor, 2 W., 250 Ohm
2689	2	Resistor, 1/3 W., 100 Ohm
2883	1	Resistor, 1/3 W., 5 M.
2882	1	Resistor, 1/3 W., 15 Ohm
2881	1	Resistor, 1/3 W., 400 M.
2880	1	Resistor, 1/3 W., 100 M.
636	1	Resistor, 1/3 W., 40 M.
2724	1	Switch, Band
2837	1	Coil, Antenna
2772	1	Coil, Oscillator
2845	1	Coil, B. C. Antenna
3343	1	Transformer, Power
3344	1	Transformer, 1st I. F.
3345	1	Transformer, 2nd I. F.
3375	1	Cond. Elec. 16 MF., 400 V
2908	1	Spring, Drive Cable
3374	1	Indicator
2378	1	Pointer
2726	1	Control, Vol. & Switch
2737	1	Control, Tone
1732	1	A. C. Cord
3778	1	Book, Instruction
2897	1	Escutcheon Tuning Tube
2981	1	Tuning Tube Cable
3710	1	Speaker, 8"
3377	1	Escutcheon

Schematic, Socket, Trimmers, Alignment

SPIEGEL, INC.

MODELS 2154, 2155 (1938)
MODELS 4500, 4502, 4504, 4550, 4512, 4514 (1937)
Chassis 6-Q

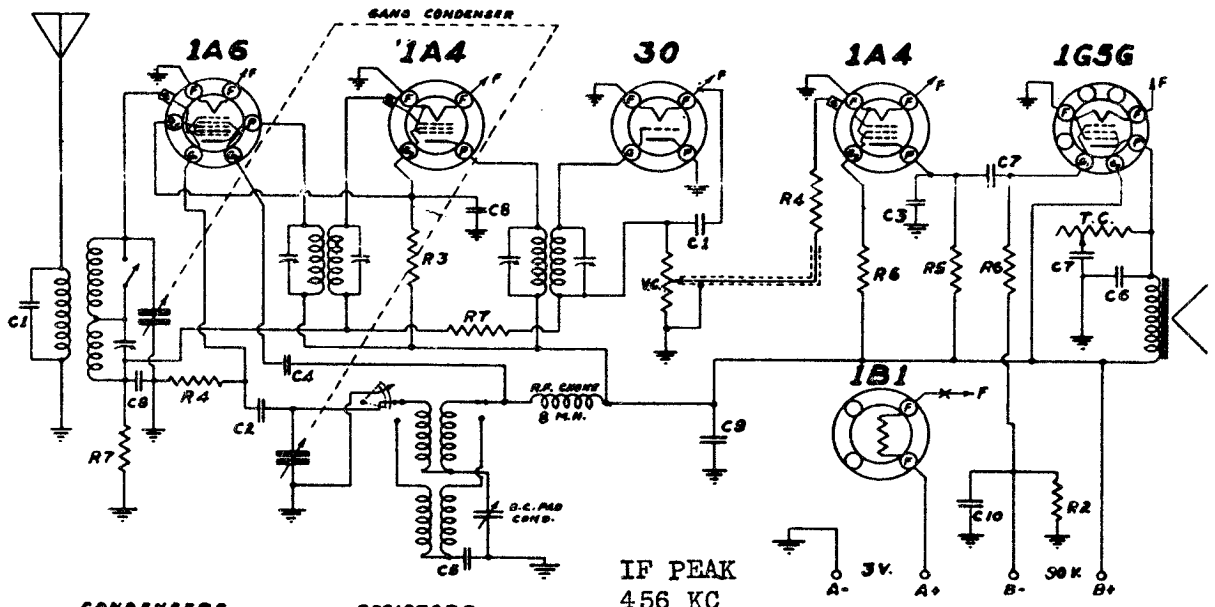

CONDENSERS

No.	MFD.	
1	.0001	MICA
2	.00025	"
3	.0005	"
4	.001	"
5	.0015	"
6	.002	200 VOLTS
7	.01	200 "
8	.05	200 "
9	.25	
10	10.0	ELECT. 25 V.

RESISTORS

No.	OHMS	WATTS
1	50.	1/2
2	535. ± 5%	1/2
3	10,000.	1/2
4	50,000.	1/2
5	200,000.	1/2
6	1. MEG.	1/2
7	2. MEG.	1/2

V.C. - VOLUME CONTROL - 1 MEGOHM.
T.C. - TONE CONTROL - 100,000 OHMS.
SWITCHES IN BROADCAST POSITION.

FREQUENCY RANGE -
535 to 1730 KC
2.2 to 6.5 MC

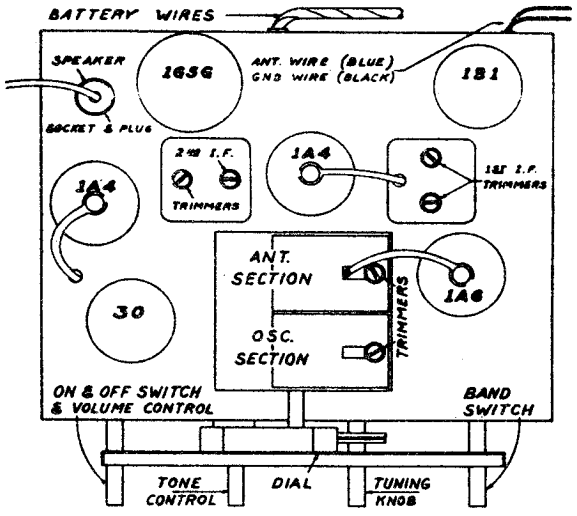

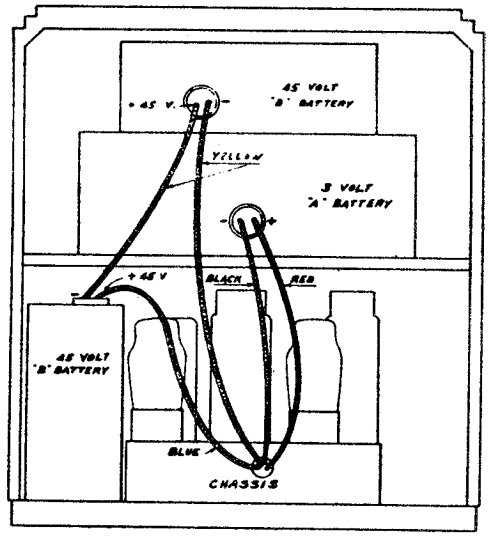

IF ALIGNMENT - Wave change Sw. in BC position. Gang condenser at minimum, generator at 456 KC, output to 1A6 CG thru .05 MFD condenser, Generator grounded to receiver, align four trimmers of IF transformers.

BROADCAST - Generator connected to antenna lead thru 200 MMFD condenser, and set at 1400 KC. Gang condenser at minimum. Trim oscillator then Antenna trimmers. Pad the oscillator circuit at 600 KC while rocking gang condenser.

SHORT WAVE - Generator at 6000 KC, start rotating gang condenser from HF end, when signal is heard, adjust antenna trimmer (SW) for maximum peak.

Repeat all adjustments for maximum performance.

©John F. Rider, Publisher

MODELS 2212-2215,2254-2257 incl.
2280,2281 Chassis 145E(1938)
MODELS 6712,6716,6766,6772
5218,Chassis 14-129(1936)

SPIEGEL, INC.

Schematic, Socket, Trimmers
Alignment, Parts

©John F. Rider, Publisher

6T7G Detector—automatic volume cont
first audio amplifier
6L5G Phase inverter
1H4G Bias rectifier
6D8G Oscillator-translator
6S7G Intermediate frequency amp
33 Power output

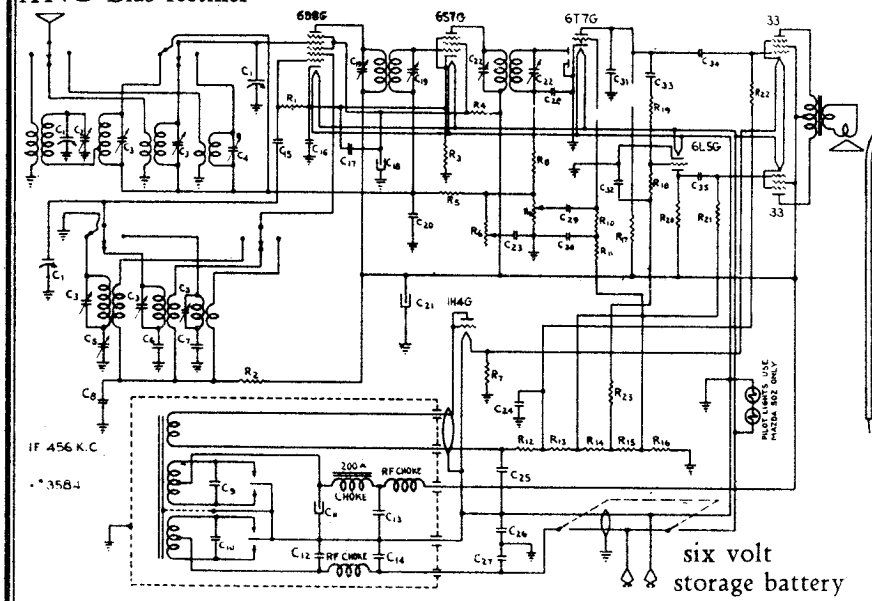

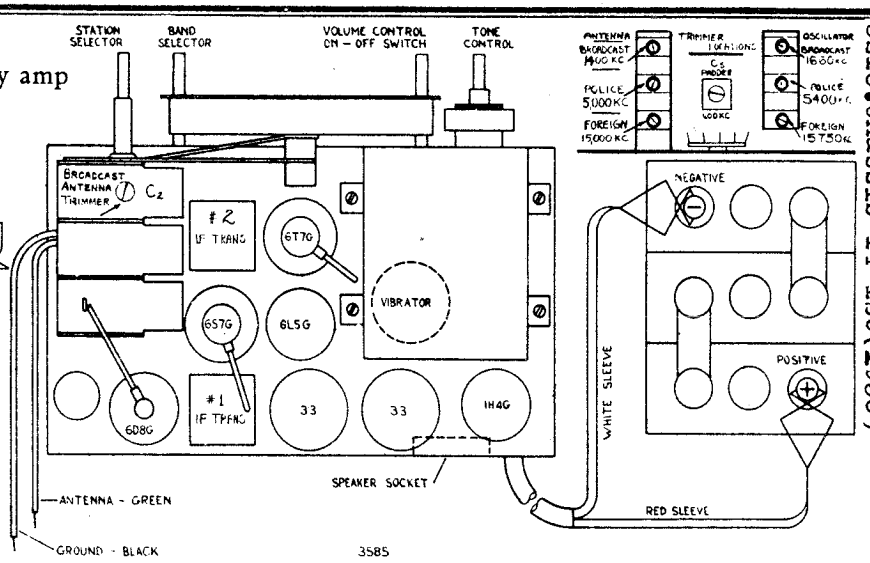

ALINEMENT PROCEDURE

Connect a high impedance AC voltmeter across loud-speaker terminals. Volume control should be set a few degrees back of maximum volume position. Use a weak signal from generator, strong signals tend to cause improper adjustments.

IF. Connect generator ground to received ground. Using .1 mfd condenser in series with "high" side of generator, apply 456 kc signal to grid of 6S7G and adjust second IF transformer; same for first IF, applying signal to grid of 6D8G. (See above diagram for location of tubes and transformers.)

RF. (See above diagram for location of trimmers.) Using 200 mmf condenser in series with the generator, feed 1660 kc to antenna lead and adjust broadcast oscillator trimmer for top frequency. Set generator to 1400 kc, tune receiver and adjust the *two* antenna trimmers. Set generator to 600 kc, tune receiver to signal and adjust padder. The tuning condenser should be rocked back and forth through the signal while the padder is being set in order to secure perfect alinement.

Using 400 ohm resistor in series with generator, set band selector in center position, set generator to 5400 kc and adjust oscillator trimmer for top frequency. Set generator to 5000 kc, tune receiver to signal and adjust antenna trimmer.

Turn band selector to extreme clockwise position. Using 400 ohm resistor in series with generator, set oscillator top frequency for 15,750 kc—screw trimmer down tight, then unscrew to *second* peak. Set generator to 15,000 kc, tune receiver to signal and adjust antenna trimmer—Screw trimmer down tight, then unscrew to *first* peak, rocking the tuning condenser back and forth through the signal while the adjustment is being made. **Above procedure for alinement at 15,000 kc must be followed exactly to insure proper tracking. A dead spot at about 12,000 kc will result if antenna and oscillator circuits are not set in proper relation to each other.**

Symbol	Part No.	Description
C1	2872	350 MMF Variable
C2,3	2597	1-10 trimmer
C4	1611	3-35 trimmer
C5	2560	360 MMF padder
C6	2741	1330 MMF padder
C7	2793	.006±5%
C8,17	565	.01 200V
C9	3579	.01 1600V
C10,12,14	3003	.5 160V
C11	3575	8 MF 250WV
C13	563	.05 400V
C15	2780	50 MMF mica
C16	2792	.2 200V
C18	3574	8 MF 150WV
C19,22		IF trimmers
C20,30,32	572	.1 200V
C21	3574	16 MF 200 WV
C23	581	.005 600V
C24	566	.5 200V
C25	579	.25 200V
C26,27	680	.05 200V
C28	1286	250 MMF mica
C29,33,34,35	576	.02 400V
C31	1285	100 MMF mica
R1	631	50M 1/3 w
R2	617	20M 1/3 w
R3	2689	100 ohms±10%
R4	609	15M 1/3 w
R5,10,11,23	624	1 Meg.
R6	3571	2 Meg. TC
R7	3580	10 ohms±5%
R8	631	50M 1/3 w
R9	3418	500M VC with DPST Switch
R12	2688	60M 1/3 w ± 10%
R13,16	3581	3M 1/3 w ± 10%
R17	602	250M 1/3 w
R18	3582	75M 1/3 w ± 10%
R19	2599	1 Meg. ± 10%
R20	603	100M 1/3 w
R21,22	615	500M 1/3 w
	3412	#1 IF transformer
	3465-1	#2 IF transformer
	3573	Power transformer
	3416	Filter choke
	2724	Band switch
	2771	Antenna coil
	2772	Oscillator coil
	L-1020	Choke coil
	2845	B.C. Antenna coil
	3421	Vibrator
	2378	Pointer
	1408	Pointer screw
	2163	Drive cable
	3268	8 Prong socket
	2165	7 Prong socket
	2221	6 Prong socket
	1489	5 Prong socket
	833	4 Prong socket
	3426	Pilot lamp
	3431	Battery connector
	3586	8" PM Dynamic speaker
	3660	6" PM Dynamic speaker

SPIEGEL, INC.

MODELS 4400,4420
Chassis 7-J
Schematic, Socket
Trimmers, Alignment
Parts

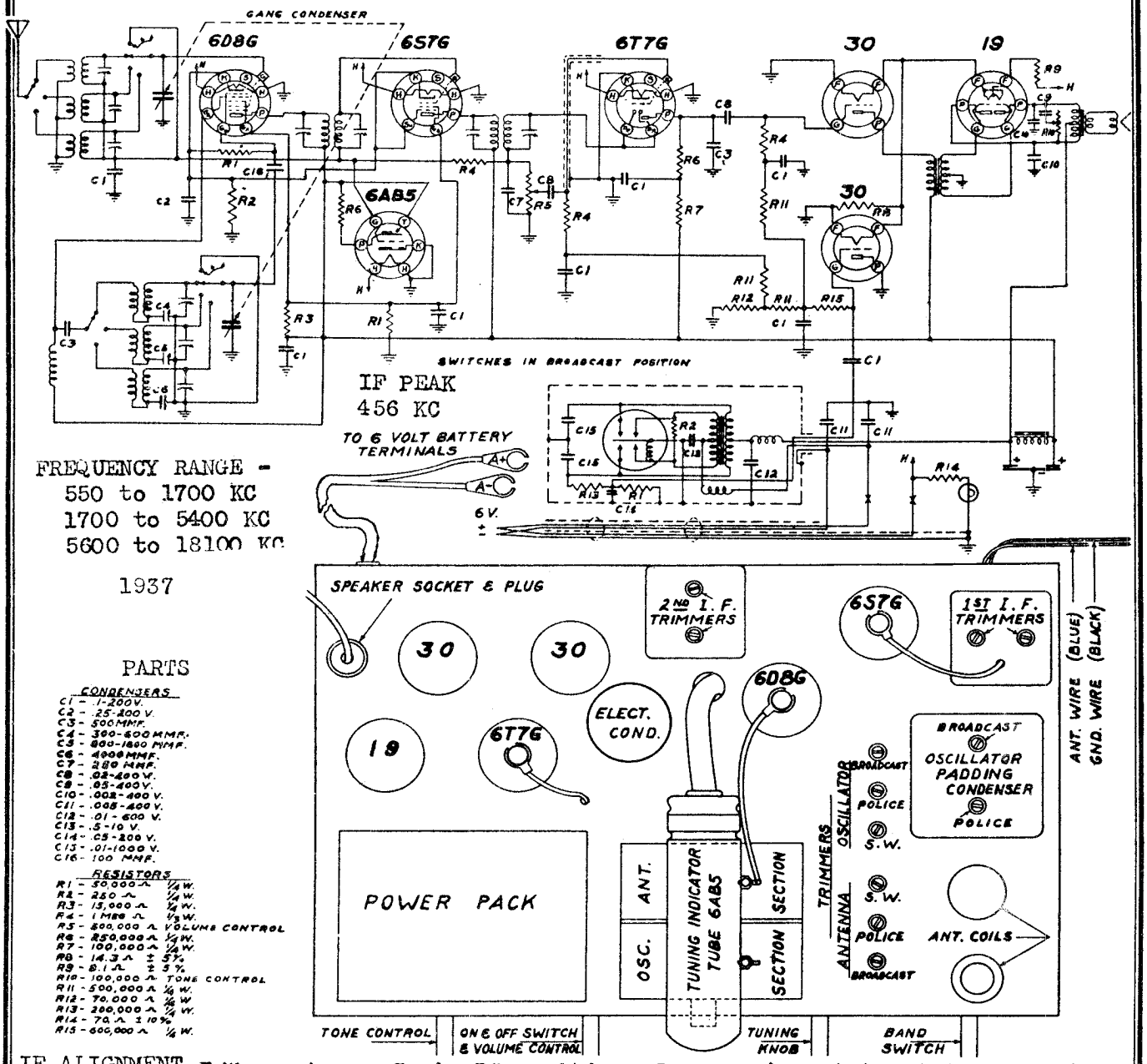

PARTS

CONDENSERS

C1 - .1-200V.
C2 - .25-400 V.
C3 - 500 MMF.
C4 - 390-600 MMF.
C5 - 800-1800 MMF.
C6 - 4000 MMF.
C7 - 280 MMF.
C8 - .02-400 V.
C9 - .05-400 V.
C10 - .002-400 V.
C11 - .008-400 V.
C12 - .01 - 600 V.
C13 - .5 - 10 V.
C14 - .05-200 V.
C15 - .01-1000 V.
C16 - 100 MMF.

RESISTORS

R1 - 50,000 Ω 1/4 W.
R2 - 250 Ω 1/4 W.
R3 - 15,000 Ω 1/4 W.
R4 - 1 MEG Ω 1/2 W.
R5 - 500,000 Ω VOLUME CONTROL
R6 - 250,000 Ω 1/2 W.
R7 - 100,000 Ω 1/4 W.
R8 - 14.3 Ω ± 5%
R9 - 8.1 Ω ± 5%
R10 - 100,000 Ω TONE CONTROL
R11 - 500,000 Ω 1/2 W.
R12 - 70,000 Ω 1/2 W.
R13 - 200,000 Ω 1/4 W.
R14 - 70 Ω ± 10%
R15 - 600,000 Ω 1/4 W.

IF ALIGNMENT - Wave change Sw. in BC position. Gang cond. set to minimum, test oscillator at 456 KC, to CG of 6D8G thru .05 MFD cond., GND to set, Align IF.

BROADCAST - Gen. connected to ANT lead thru 200 MMFD condenser, Gang at minimum. Osc. to 1730 KC, and adjust OSC. trimmer of set. Shift Gen. and dial to 1400 KC, and adjust ANT trimmer. Generator at 600 KC, pad oscillator to maximum peak.

POLICE - Replace 200 MMFD cond. with 400 ohm resistor, Generator at 5600 KC, Gang condenser at minimum, trim Osc. circuit, Gen. at 4000 KC, trim ANT trimmer. Gen. at 1800 KC and pad Police Oscillator circuit to maximum peak.

SHORT WAVE - Generator at 18100 KC, gang condenser at minimum, adjust oscillator trimmer to peak, Generator at 16000 KC adjust SW ANT trimmer to peak. No padding required on this band but check 6000 KC for alignment & sensitivity. For maximum performance, all above adjustments should be repeated. Rock Gang condenser for padding adjustments.

©John F. Rider, Publisher

MODEL 4500
Chassis 4536
Schematic, Socket
Voltage, Alignment

SPIEGEL, INC.

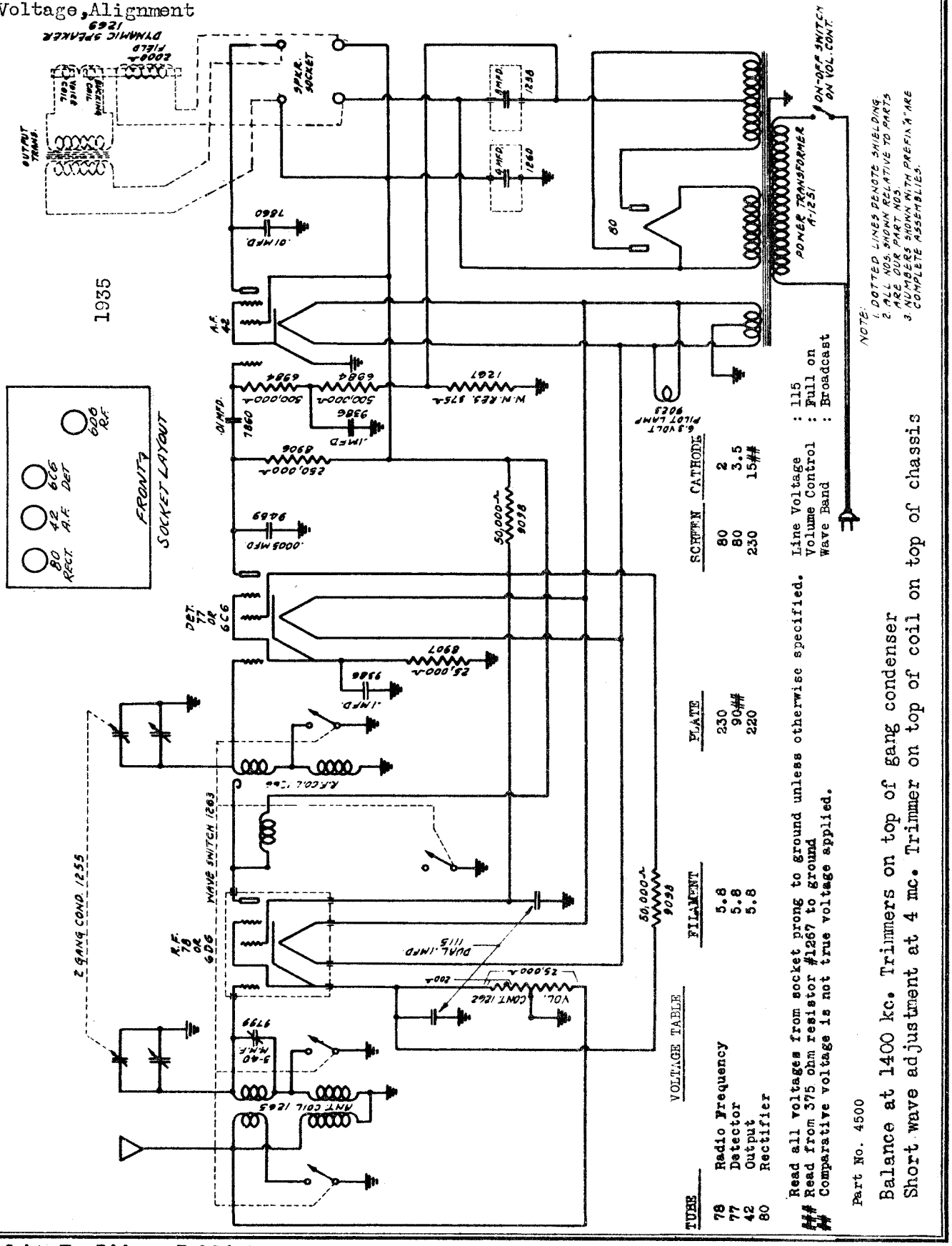

TUBE	VOLTAGE TABLE FILAMENT	PLATE	SCREEN	CATHODE
78 Radio Frequency	5.8	230	80	2
77 Detector	5.8	90##	80	3.5
42 Output	5.8	220	230	15##
80 Rectifier				

Line Voltage : 115
Volume Control : Full on
Wave Band : Broadcast

Read all voltages from socket prong to ground unless otherwise specified.
Read from 375 ohm resistor #1267 to ground
Comparative voltage is not true voltage applied.

Part No. 4500

Balance at 1400 kc. Trimmers on top of gang condenser
Short wave adjustment at 4 mc. Trimmer on top of coil on top of chassis

©John F. Rider, Publisher

SPIEGEL, INC.

MODELS 4404,4452
Chassis 6-P
Schematic,Alignment

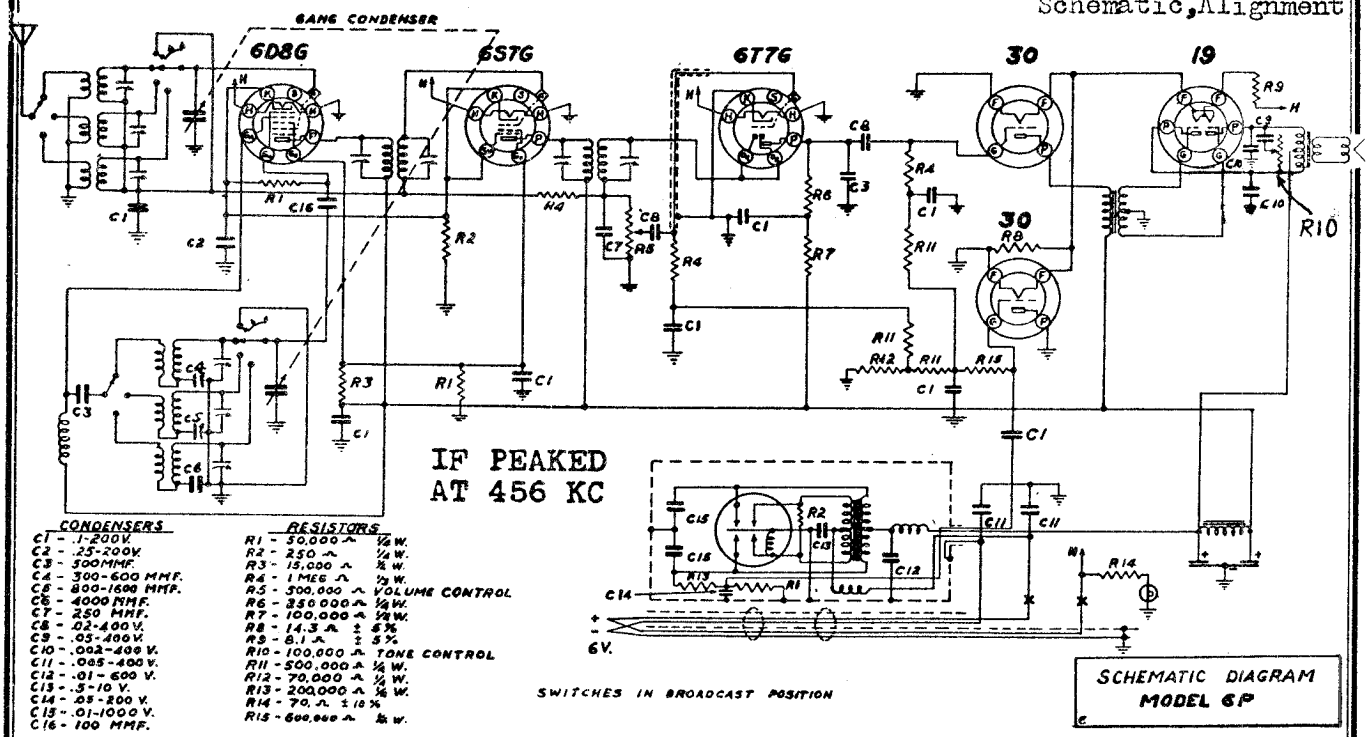

CONDENSERS

C1 - .1-200V.
C2 - .25-200V.
C3 - 500MMF.
C4 - 300-600 MMF.
C5 - 800-1600 MMF.
C6 - 4000 MMF.
C7 - 250 MMF.
C8 - .02-400 V.
C9 - .05-400V.
C10 - .002-400 V.
C11 - .005-400 V.
C12 - .01 - 600 V.
C13 - .5-10 V.
C14 - .05 - 200 V.
C15 - .01-1000 V.
C16 - 100 MMF.

RESISTORS

R1 - 50,000 Ω 1/6 W.
R2 - 250 Ω 1/4 W.
R3 - 15,000 Ω 1/2 W.
R4 - 1 MEG Ω 1/2 W.
R5 - 500,000 Ω VOLUME CONTROL
R6 - 350 000 Ω 1/2 W.
R7 - 100,000 Ω 1/2 W.
R8 - 14.3 Ω ± 5%
R9 - 8.1 Ω ± 5%
R10 - 100,000 Ω TONE CONTROL
R11 - 500,000 Ω 1/2 W.
R12 - 70,000 Ω 1/2 W.
R13 - 200,000 Ω 1/2 W.
R14 - 70. Ω ± 10%
R15 - 600,000 Ω 1/2 W.

FREQUENCY RANGE-
550 to 1700 KC
1700 to 5400 KC
5600 to 18100 KC

Six Tube 6 Volt Battery Superheterodyne 6P Chassis

ALIGNMENT DATA AND SERVICING

GENERAL DATA

The alignment of this receiver requires the use of a test oscillator which will cover the frequencies of 456, 600, 1400, 1730, 1800, 4000, 5600, 6000, and 18,000 KC and an output meter which is to be connected across the primary or secondary of the output transformer. If possible, all alignments should be made with the volume control on maximum and the test oscillator output as low as possible, to prevent the AVC from operating and giving false readings.

CORRECT ALIGNMENT PROCEDURE

The intermediate frequency (I.F. stage should be aligned properly as the first step. After the I.F. transformers have been properly adjusted and peaked, the Broadcast Band should always be the next procedure; after which, both of the Short Wave Bands may be aligned.

I.F. ALIGNMENT

With the wave switch in the broadcast band and the gang condenser set at minimum, adjust the test ocillator to 456 KC and connect the output to the grid of the first detector tube (6D8G) through a .05 or .1 mfd. condenser. The ground on the test oscillator can be connected to the chassis ground. Align all four I.F. trimmers to peak or maximum reading on the output meter.

BROADCAST BAND ALIGNMENT

Connect the output of the signal generator to the antenna lead (blue) through a .0002 mfd. mica condenser. Set the gang condenser to minimum and the oscillator to 1730 KC and adjust the "oscillator trimmer" to receive this signal. Make no other adjustments at this frequency. Then set the generator to 1400 KC and tune in this signal by rotating the gang to 1400 on the dial. Adjust the "antenna" trimmer to maximum signal. Set the signal generator to 600 KC and tune in the signal on the receiver. **Note:** Approximately the same sensitivity should be noted at this point as was at 1400 KC. The signal strength may sometimes be improved by padding the circuits. This is done by slowly increasing or decreasing the oscillator padding condenser and, at the same time, continuously tuning back and forth across the signal with the receiver until the maximum reading is obtained on the output meter. This adjustment may seem a little complicated but is the easiest way to adjust the oscillator to the antenna. Return to 1400 KC and again go over the adjustments of this frequency to be certain that they were not put slightly out of alignment when adjustment was made at 600 KC.

POLICE BAND ALIGNMENT

The police band is adjusted by first replacing the .0002 dummy with a 400 ohm resistor and setting the generator to 5600 KC. With the gang set at minimum, adjust the "police oscillator trimmer" to receive this signal, then set the signal generator to 4000 KC and adjust "police antenna trimmer" to give maximum output. Next, set the oscillator to 1800 KC and "pad" the circuit at this frequency as described in the instructions for padding the broadcast circuits.

SHORT WAVE BAND ALIGNMENT

The short wave band is adjusted by setting the generator to 18,100 KC and with the gang at minimum, adjust the "short wave oscillator trimmer" to receive the signal. Set the generator at 16,000 KC and adjust the "short wave antenna" to give maximum output. As there is no variable low frequency padding condenser on this band, the sensitivity of the receiver should be checked at 6000 KC to determine whether the circuits are in line at this frequency. Should the receiver lack sensitivity at 6000 KC, the antenna and oscillator coils, as well as the .004 mica padding condenser, should be tested for defects as sometimes these components become subject to mechanical or electrical injuries, despite their rugged construction and liberal ratings.

SERVICE DATA FOR ALL BANDS

If it is suspected that the oscillator has stopped but is doubtful due to the presence of the usual amount of noise level, it is suggested that the oscillator plate voltage be checked. To ascertain whether the tube is oscillating, ground the oscillator grid of the 6D8G (short stator and rotor plates of oscillator section on gang condenser). If oscillating properly, grounding the grid will cause an appreciable drop in oscillator voltage.

©John F. Rider, Publisher

©John F. Rider, Publisher

This receiver is designed to operate over three tuning ranges; the broadcast range which extends from 550 to 1700 Kilocycles (KC) (176 to 545 meters), Police and Aviation Band which extends from 1700 to 5400 Kilocycles (KC) (56 to 176 Meters) and the International Short Wave Band which extends from 5600 to 18,100 Kilocycles (KC) 16.5 to 53 Meters). This latter range is the one which includes the four internationally assigned bands —the 19, 25, 31 and 49 meter bands.

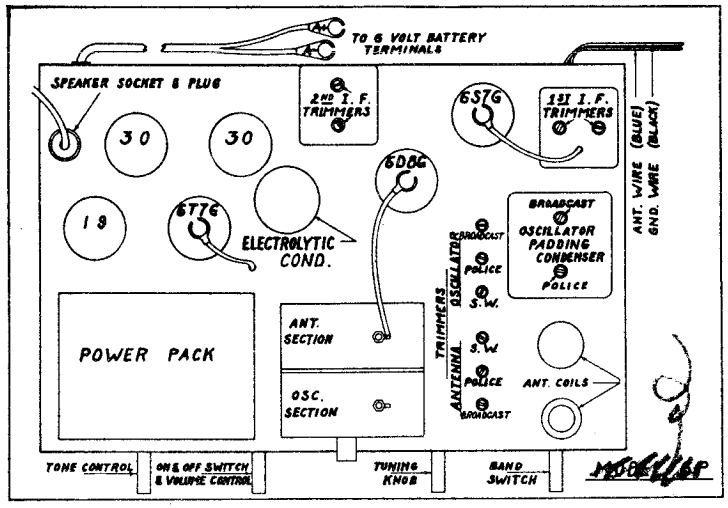

NOTICE — MICROPHONIC NOISE CORRECTION
If this radio instrument appears to be microphonic during operation, loosen the four (4) mounting screws that secure the chassis to the cabinet and remove the two (2) wooden strips that are underneath the chassis. This allows the chassis to float and rest on the four (4) rubber pads used for this purpose.
After the strips have been removed, adjust the chassis in the cabinet so that the dial will be in the center of the front escutcheon plate. Do not retighten the mounting screws.
"Should this radio set be moved any great distance, it is best to put the wooden strips back under the chassis and have the mounting screws securely tightened. If this is not done, damage may be done to the instrument, cabinet or tubes."

INSTALLATION

BATTERY CONNECTIONS At the rear of the receiver there will be found extending from the right end of the chassis, the battery connecting cable. Observation will show that 5 wires are brought out from the braided cable. The **red** and **red with black tracer wires** are joined together and should **both** be securely fastened to the positive (+) terminal of the 6 volt storage battery. The other 3 wires which are **brown. black with green tracer** and **Metallic shield lead** are also joined together and should be securely connected to the negative (—) post of the battery.

Note: It is extremely important that only the best possible means of obtaining a secure connection to the battery terminals be employed. If a battery with automobile terminal posts is used, the **large** post is the positive (+) post; the **smaller post** is the **negative** (—) terminal. It is suggested, when using a battery with auto type posts that large heavy lead covered battery clips be used in making connections. Make sure that **all wires** are firmly connected to clips (solder if possible). Also see that the jaw teeth of the clips are clean, and firmly bite into the post. It is very important that the battery posts and battery clip teeth be cleaned at frequent intervals to assure maintaining good connections. Corrosion may be readily removed by cleaning with a solution of 3 tablespoons of bicarbonate of soda (baking soda) and one cup of water. This solution neutralizes the acid coating that causes the corrosion and leaves a protective condition that retards further corrosion. It is important that this solution does not in any way enter the interior of the battery.

ANTENNA

REGULAR ANTENNA Use a standard outside antenna of at least 50 feet including lead-in. Connect the antenna to the "Blue" lead.
In remote locations that are far away from powerful broadcasting stations, a longer antenna may be used for increased receiving range. Antennas as long as 150 to 200 feet may be employed in "dead spots." (Longer antennas increase sensitivity and decrease selectivity slightly.)

GROUND **This receiver requires a good ground.** Water pipes make a very desirable ground connection. Where the wire makes contact, the pipe must be clean and free of paint or corrosion. The ground wire should be connected to the "Black" lead.

Where the above mentioned ground facilities are not available, a good outside ground may be had by sinking a metal pipe or ground rod about six feet into moist earth. An excellent bed can be prepared by digging a hole and filling with charcoal, in which the ground rod is placed. The charcoal bed surrounding the ground rod will maintain a desirable moist condition throughout the year.

IMPORTANT NOTE: The battery must never be charged while set is in operation. If a windcharger is used, it should always be disconnected from the battery when the receiver is being used. An inexpensive single pole switch can be used for disconnecting the windcharged from the battery. This will increase the life of the tubes and give additional economy to the use of the receiver.

P1727	Antenna Coil
P392	Battery Cable
P402	Vibrator Unit
P406	Vibrator Socket
P411	Filter Choke
P551	Type 30 Socket
P687	Type 19 Socket
P1666	Type 6T7G7 Socket
P1667	Type 6D8G Socket
P1668	Type 6S7G Socket
P1388	Speaker Socket
P1735	1st I.F. Transformer
P954	Power Transformer
P958	Electrolytic Condenser
P1180	6 Gang Trimmer
P1455	Tube Shield
P1540	Escutcheon
P1605	Knob (Volume)
P1606	Knob (Selector
P1607	Knob (Band Switch)
P1608	Knob (Tone)
P1764	Tone Control
P1220	200,000 Ohm ¼ Watt 20% Resistor
P1500	200,000 Ohm 1/3 Watt 20% Resistor
P162B	1 Megohm 1/3 Watt Resistor
P1715	14.3 Ohm ½ Watt 5% Wire Wound Resistor
P1716	8.1 Ohm ½ Watt 5% Wire Wound Resistor
P141	.25 Mfd. 200 Volt Condenser
P142	.1 Mfd. 200 Volt Condenser
P143	.02 Mfd. 400 Volt Condenser
P1653	Rubber Mounting Pads
P1676	Gang Condenser
P1677	Volume Control and Switch
P1692	Trimmer Condenser
P1683	Pointer
P1685	Band Switch
P1686	Pilot Light Socket
P1687	Pilot Light Bulb
P1688	Dial Scale
P1690	2nd I.F. Transformer
P719	Input Audio Transformer
P1696	6" P. M. Speaker
P1697	8" P. M. Speaker for Console
P675	20,000 ¼ Watt 20% Resistor
P139	250 Ohm ¼ Watt 20% Resistor
P1732	70 Ohm ½ Watt 10% Wire Wound Resistor
P136	250 Ohm ¼ Watt 20% Resistor
P137	500 Ohm ¼ Watt 20% Resistor
P258	15,000 Ohm ¼ Watt 20% Resistor
P280	100,000 Ohm ¼ Watt 20% Resistor
P417	50,000 Ohm ¼ Watt 20% Resistor
P148	.05 Mfd. 200 Volt Condenser
P334	.05 Mfd. 400 Volt Condenser
P335	.01 Mfd. 600 Volt Condenser
P395	.5 Mfd. 10 Volt Condenser
P1079	.01 Mfd. 1000 Volt Condenser
P1193	.002 Mfd. 400 Volt Condenser
P1194	.005 Mfd. 400 Volt Condenser
P336	.0005 Mfd. Mica Condenser
P490	.0001 Mfd. Mica Condenser
P1683	.004 Mfd. Mica Condenser
P147	.00025 Mfd. Mica Condenser

SPIEGEL, INC.

MODELS 4508,9905,9911
Chassis 2005
Schematic,Parts

1934

June, 1934

Fig. 5—Phonograph Connections

Fig. 1—Schematic Circuit Diagram

CONDENSERS

Part No.	Code	Capacity	Volts	Type
P-80919	C1	250 mmfd.		Moulded
P-80862	C2	.05 mfd.	200V.	Tubular
P-80888	C3	.25 mfd.	200V.	Tubular
P-80862	C4	.05 mfd.	200V.	Tubular
P-80862	C5	.05 mfd.	200V.	Tubular
P-80888	C6	.25 mfd.	200V.	Tubular
P-80862	C7	.05 mfd.	200V.	Tubular
P-81005	C8	.35 mmfd.	600V.	Moulded
*P-80997	C9	.01 mfd.	600V.	Condenser in metal can
*P-80888	C10	.25 mfd.	200V.	Tubular
P-80985	C11	.15 mfd.	200V.	Tubular
P-81039	C12	16.0 mfd.	400V.	Wet Electrolytic
P-81018	C13	6.0 mfd.	150V.	Dry Electrolytic
	C16	2.0 mfd.	300V.	
	C18	2.0 mfd.	300V.	
P-80862	C14	.05 mfd.	200V.	Tubular
P-80864	C15	.10 mfd.	200V.	Tubular
P-81005	C17	.35 mmfd.	600V.	Moulded
P-80863	C19	.004 mfd.	600V.	Tubular
P-81041	C20	.10 mfd.	600V.	Tubular
P-2102	C21	3-40 mmfd.		Ant. S.W. Trimmer
P-2102	C22	3-40 mmfd.		1st Det. S.W. Trimmer
P-2103	C23	200± 50 mmfd.		Dual Trimmer
	C24	200± 50 mmfd.		Part of I.F. Assem.
P-2103	C25	200± 50 mmfd.		Dual Trimmer
	C26	200± 50 mmfd.		Part of I.F. Assem.
P-1685	C27	70± 30 mmfd.		3rd I.F. Coil Trimmer
P-2112	C28	300-500 mmfd.		600 K.C. Trimmer
P-2102	C29	3-40 mmfd.		Osc. S.W. Trimmer
P-1685	C30	70± 30 mmfd.		6000 K.C. Trimmer
P-81027		Three Gang Condenser		

RESISTORS

Part No.	Code	Resistance	Watts	Type
P-A95204	R1	200,000 ohm	.2	Carbon
P-98023	R2	150 ohm	.5	Flex. Wire Wound
P-A95105	R3	1 megohm	.2	Carbon
P-A95205	R4	2 megohm	.2	Carbon
P-98024	R5	400 ohm	.5	Flex. Wire Wound
P-A94304	R6	300,000 ohm	.2	Carbon
P-A95104	R7	100,000 ohm	.2	Carbon
P-A94252	R8	2,500 ohm	.2	Carbon
P-98022	R9	30,000 ohm	2.0	Carbon
P-A95104	R10	100,000 ohm	.2	Carbon
P-C94303	R11	30,000 ohm	1.0	Carbon
P-96005	R12	2 megohm		Volume Control and Switch
	R13	780 ohm	3.0	
P-98006	R14	6000 ohm	1.4	Armored Wire Wound
	R15	460 ohm	.2	
P-97003	R16	3 megohm		Tone Control

*Used in Early Models only.

Part No.	Item
P-50638	Power Transformer 115V. 60 cycles T 10
P-50639	Power Transformer 115V. 25 cycles T 10
P-50640	Power Transformer 115-230V. 40-60 cycles T 10
P-50641	Power Choke L 1
P-50642	Audio Output Transformer T 12
P-50643	Audio Input Transformer T 11
P-5176	Antenna R.F. Trans. T 1 and T 2 less can
P-5177	Interstage R.F. Trans. T3 and T4 less can
P-5178	Oscillator Coil Assembly T8 and T9 less can
P-5186	3rd I. F. Coil T7 less can
P-40433	Cans for the above coils
P-5184	1st I.F. Coil & Can Assembly T5
P-5185	2nd I.F. Coil & Can Assembly T6
P-5190	H. F. Oscillator Tracking Coil L3
P-5151	I.F. Plate Isolating Reactor L4
P-70702	A.C. Cord & Plug
P-1421	Single Insulated Terminal Strip
P-1441	Double Insulated Terminal Strip
P-2060	Small Knob
P-2062	Large Knob
P-30342A	Grid Cap only
P-30456	Small Pointer
P-20912	Large Double End Pointer
P-2012	Pilot Light Bulb
P-10272	Rubber Mounting Feet
P-10320	Glass Crystal
P-20875	Crystal Retaining Ring
P-2152	8" Dynamic Speaker Mantel L2
P-1968	10" Dynamic Speaker Console L2
P-2101	Three Position Band Change Switch
P-20905	Condenser Shield
P-2126	8" Black Drive Cord (V.C. or T.C. Ind.)
P-20911	29" Black Drive Cord (Cond. Drive)
P-1011A	Pilot Lamp Socket & Clip Assembly
P-1193	Bottom Shield
P-2025	Phono-Radio Switch
P-1643	Phono Jack
P-2022	No. 80 Socket
P-1885	No. 45 Socket
P-1637	No. 76 Socket
P-40434	No. 6D6 Socket
P-40424	Speaker Socket
	Tube Shield—Aluminum (for earlier models)
	Tube Shield Base—Aluminum (for earlier models)

©John F. Rider, Publisher

©John F. Rider, Publisher

Replacing Drive Cord

Remove chassis from cabinet.

Take off the pilot light assembly by lifting off the two sockets and spring clips.

Detach the large pointer by removing the screw at the center of the dial.

Loosen the dial assembly by taking out the two screws which secure the bottom of this assembly to the chassis.

Then lay the complete dial assembly face downward in front of the chassis. It is not necessary to remove the volume control and tone control collars which hold the indicator cords of these two controls in position.

Turn the drive drum until the opening in this drum is approximately vertical and with the hole at the top as shown in Fig. 4.

Remove the tension spring and the old drive cord.

See that the eyelet is in the hole in the drive drum as shown in Fig. 4. Insert one end of the drive cord from the outside through the hole in the eyelet in the drive drum.

Tie the end of the cord which has been inserted in the hole to one end of the tension spring.

Wrap the cord in a clockwise direction (facing front of chassis) around the drive drum approximately one-half turn.

Then tilt the chassis up on its back panel and bring the cord mentioned in the previous paragraph down to the drive shaft. Wrap it two and one-half times around the drive shaft as shown in Fig. 4.

Then bring this cord up from the drive shaft and wrap it around the drive drum approximately one and one fifth turns in a clockwise direction until it is up to the hole in this drum as illustrated.

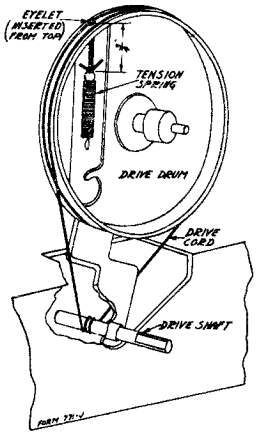

Fig. 4—Drive Cord Replacement

Insert the free end of the cord through the hole in the eyelet and tie it to the end of the tension spring. The end of the spring, when hanging free, should be approximately ¾" from the flange of the drum as shown in Fig. 4. Cut off the surplus length of cord after it is knotted.

Then secure the other end of the tension spring over the spur on the drive drum.

Replace the dial assembly and pointer.

Replace the pilot light assembly after which the chassis may be reinstalled in the cabinet.

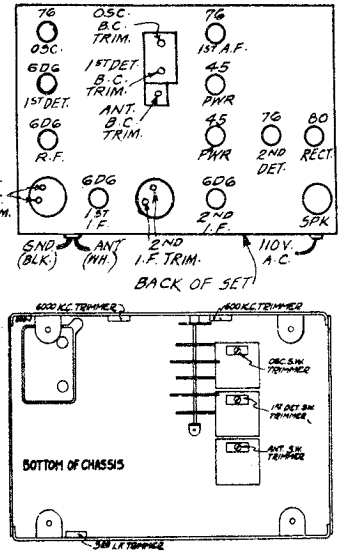

Fig. 2—Tube Arrangement & Location of Trimmers

Voltages at Sockets

LINE VOLTAGE — 115

ANTENNA SHORTED TO GROUND

Type of Tube	Function	Across Fila. or Heater	Plate to Cath.	Screen to Cath.	Cath. to Ground	Normal Plate M. A.
6D6	R. F.	6.3	95	95	2.8	7.0
6D6	1st Det.	6.3	88	95	9.2	2.9
76	Osc.	6.3	110	—	—	5.0
6D6	1st I. F.	6.3	95	95	2.8	7.0
6D6	2nd I. F.	6.3	300	95	3.3	6.0
76	2nd Det.	6.3	—	—	—	—
76	1st Audio	6.3	160	—	9.0	4.0
45	Output	2.5	245	—	48.0	30.0
80	Rectifier	5.0	890 V. A. C. pl. to pl.			58.0 per plate

Phono Connections

Phonograph connections can be made as shown in Fig. 5. A single pole double throw switch and double pin jack are required. These should be mounted on the back panel of the chassis close to the 2nd detector. The connections are made by opening the diode circuit at the point shown in the illustration and completing the connections to the switch and pin jacks as indicated. A high impedance pick-up should be used. If a low impedance pick-up is used a step-up transformer will be required for sufficient volume. The volume control of the set will regulate the phono volume.

Change in Early Models

In the early models of this receiver the side of the trimmer condenser C27 which is shown in Fig. 1 as connected to ground was connected to the B+ side of the 3rd I. F. coil primary.

Condenser Alignment

Correct alignment is extremely important in connection with all wave receivers. The receivers are all properly aligned at the factory with precision instruments and realignment should not be attempted unless all other possible causes of the faulty operation have first been investigated and unless the service technician has the proper equipment. A signal generator that will provide an accurately calibrated signal of 456 K. C. and accurately calibrated signals over the broadcast and short wave bands, 530-1740 K. C. and 5.8-18.3 M. C., is required. An output indicating meter is also necessary. It will be practically impossible to align the receiver if unsatisfactory apparatus is used.

Use a non-metallic screw driver for the adjustments. The complete procedure is as follows:

Intermediate Frequency Adjustment

Set the signal generator for 456 K. C. Connect the antenna lead of the signal generator to the grid of the 1st detector through a .05 mfd. condenser. Turn the tuning condenser rotor until the plates are completely out. The ground lead from the signal generator goes to the ground lead of the receiver. The volume control should be at the maximum position. Reduce the signal so that A. V. C. action is not obtained.

Then adjust the five I. F. trimmer condensers until maximum output is obtained. The adjusting screws for the 1st and 2nd trimmer condensers are reached from the top of the chassis and are in the round I. F. cans - See Fig. 2. The openings to these trimmer condensers are covered over by small cover plates which are held in position by screws. Loosen these screws until the cover plates can be swung around. **CAUTION - Use an insulated screwdriver for adjusting trimmers to prevent short circuiting to ground.** In the 3rd I. F. coil, only the primary has a variable trimmer condenser. This condenser is mounted on the back panel of the chassis as shown in Fig. 2 and the adjustment screw is reached through a hole in the back panel.

Broadcast Band Adjustment

The broadcast short wave switch should be in the broadcast position. Set the signal generator for 1740 K. C. Turn the rotor to the full open position. The antenna lead from the signal generator is in this instance connected to the antenna lead of the receiver. Reduce the signal so that A. V. C. action is not obtained. Adjust the oscillator broadcast trimmer until maximum output is obtained. This trimmer is on the tuning condenser and its location is shown in Fig. 2.

Then set the signal generator for 1500 K. C. Turn the rotor until maximum output is obtained. Loosen the set screw in the pointer hub and set the pointer at the 1500 K. C. mark on the broadcast band scale. Retighten the hub set screw. Then adjust the antenna and 1st detector broadcast trimmers until maximum output is obtained.

Next set the signal generator for 600 K. C. and adjust the 600 K. C. trimmer. The adjusting screw is reached through a hole in the front panel of the chassis as shown in Fig. 2. Turn the tuning condenser rotor until maximum output is obtained. Then turn the rotor slowly back and forth over this setting at the same time adjusting the 600 K. C. trimmer screw until the highest output is obtained.

Short Wave Band Adjustment

CAUTION—After the broadcast band alignment as described above has been made, do not change the adjustment of any of the broadcast band trimmers.

In aligning the short wave band of the receiver, it will be noted that the signal will be heard with the signal generator set at two points 912 K. C. apart. That is, if the receiver is tuned to 15,000 K. C. a signal will be heard when the signal generator is set at 15,000 K. C. and again at approximately 15,912 K. C. This is due to image reception or the fact that a 456 K. C. beat is obtained when the signal is 456 K. C. lower than the receiver oscillator and also when the signal is 456 K. C. higher than the receiver oscillator. Care should be taken to see that the receiver is tracked with the signal generator adjusted to the lower of the two frequencies at which a signal is heard, in order that the oscillator in the receiver will be 456 K.C. higher in frequency than the signal.

Turn the broadcast short wave switch to the short wave position. Turn the rotor to the full open position. As explained above, the volume control should be at the maximum position and the signal should be reduced to prevent A. V. C. action. Set the signal generator for 18,300 K. C. Then adjust the oscillator short wave trimmer for maximum output. This trimmer is reached from under the chassis and its position is shown in Fig. 2. If a maximum output peak cannot be reached, it may be due to the fact that the antenna and 1st detector short wave trimmers are screwed down too far. Back off these two trimmer screws two or three turns and then adjust the oscillator short wave trimmer for maximum output.

Next set the signal generator for 15,000 K. C. Turn the rotor until maximum output is obtained. Then adjust the antenna and 1st detector short wave trimmers for maximum output.

Next set the signal generator for 6000 K. C. and adjust the 6000 K. C. trimmer. This condenser is mounted on the front panel of the chassis as shown in Fig. 2 and is reached through a hole in the front panel. Turn the tuning condenser rotor until maximum output is obtained. Then turn the rotor slowly back and forth over this setting, at the same time adjusting the 6000 K. C. trimmer screw until the highest output is obtained.

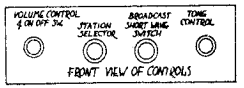

Fig. 3—Arrangement of Controls

D. C. Resistance of Windings

Following are the D.C. resistances of the various windings in the chassis.

Part No.	Item	Code		D.C. Resistance in Ohms
P-5176	S.W. and B.C. Antenna R.F. Transformer Primaries (in series)	T1	T2	27.9
	B.C. Antenna R.F. Transformer Secondary	T1		5.0
	S.W. Antenna R.F. Transformer Secondary	T2		Small
P-5177	S.W. and B.C. Interstage R.F. Transformer Primaries (in series)	T3	T4	2.7
	B.C. Interstage R.F. Transformer Secondary	T4		4.4
	S.W. Interstage R.F. Transformer Secondary	T3		Small
P-5178	S.W. Oscillator Grid Coil	T9		Small
	S.W. Oscillator Plate Coil	T9		.25
	B.C. Oscillator Grid Coil	T8		3.5
P-5190	S.W. Oscillator Tracking Coil	L3		1.27
P-5184	1st I.F. Coil Primary	T5		5.0
	1st I.F. Coil Secondary	T5		5.0
P-5185	2nd I.F. Coil Primary	T6		5.0
	2nd I.F. Coil Secondary	T6		5.0
P-5186	3rd I.F. Coil Primary	T7		9.3
	3rd I.F. Coil Secondary	T7		26.3
P-50643	Audio Input Transformer Primary	T11		2800.
	Audio Input Transformer Secondary Center Tap to Outside	T11		2600.
	Audio Input Transformer Secondary Center Tap to Inside	T11		2000.
P-50642	Audio Output Transformer Primary Center Tap to Outside	T12		360.
	Audio Output Transformer Primary Center Tap to Inside	T12		320.
	Audio Output Transformer Secondary	T12		.44
P-1968	Speaker Voice Coil			3.0
	Speaker Field Coil	L2		5000.
P-50641	Filter Choke	L1		150.
P-50638	Power Transformer 115V. 60 Cycles Pri.	T10		5.3
	Power Transformer 115V. 60 Cycles H.T. Sec. Center Tap to Outside	T10		120.
	Power Transformer 115V. 60 Cycles H.T. Sec. Center Tap to Inside	T10		110.
	Power Transformer 115V. 60 Cycles Sec. (80 Fil.)	T10		Small
	Power Transformer 115V. 60 Cycles Sec. (AA Fil.)	T10		Small
	Power Transformer 115V. 60 Cycles Sec. (BB Fil.)	T10		Small

MODELS 4509, 9912
Chassis 22B7
Schematic, Socket
Trimmers, Parts

SPIEGEL, INC.

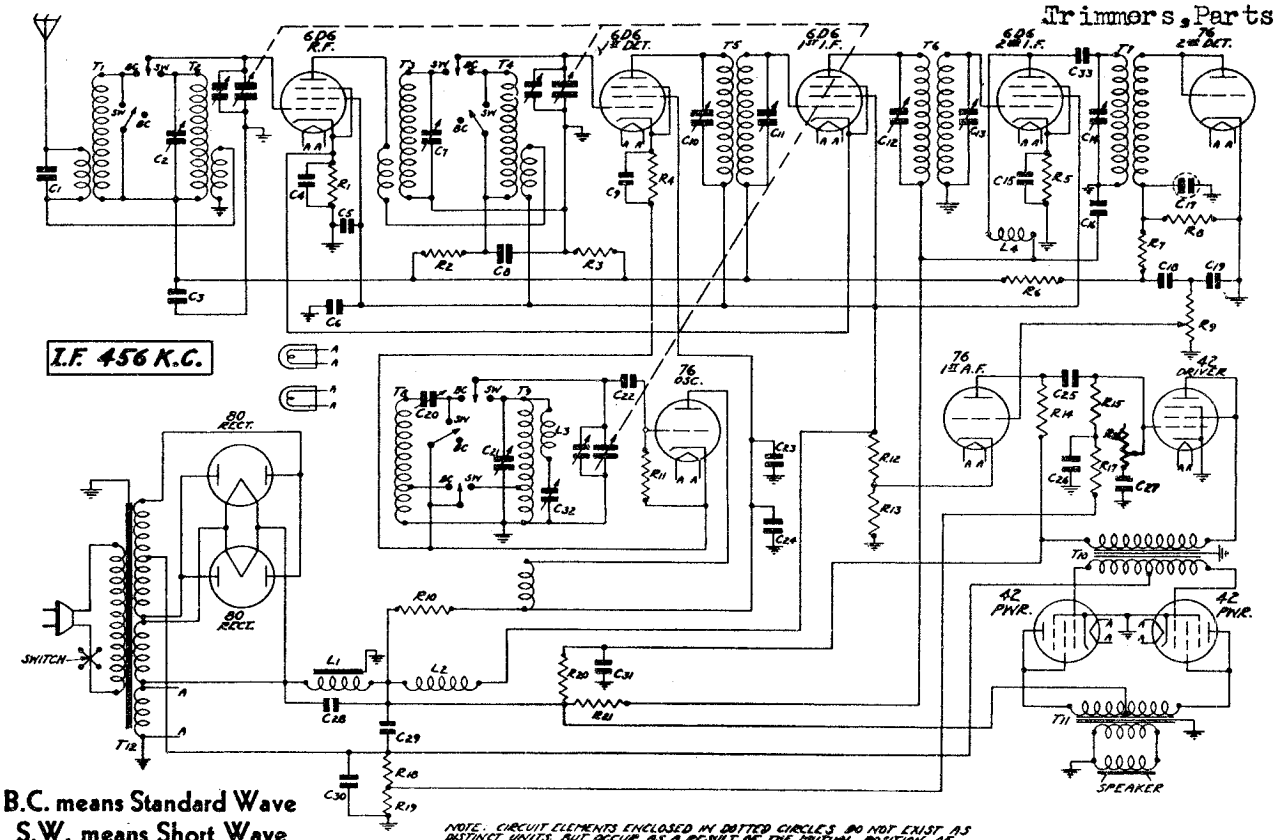

NOTE: CIRCUIT ELEMENTS ENCLOSED IN DOTTED CIRCLES DO NOT EXIST AS DISTINCT UNITS BUT OCCUR AS A RESULT OF THE MUTUAL POSITION OF OTHER CIRCUIT ELEMENTS OR THEIR PARTS.

Fig. 1—Schematic Circuit Diagram

Aug., 1934

RESISTORS

Part No.	Code	Resistance	Wattage	Type
P-A93141ww	R1	140 Ohm		Wire Wound
P-A95204	R2	200,000 Ohm	0.2	Carbon
P-A95105	R3	1.0 Megohm	0.2	Carbon
P-A94252	R4	2,500 Ohm	0.2	Carbon
P-A93401ww	R5	400 Ohm	0.2	Wire Wound
P-A95205	R6	2.0 Megohm	0.2	Carbon
P-A95104	R7	100,000 Ohm	0.2	Carbon
P-A94304	R8	300,000 Ohm	0.2	Carbon
P- 96005	R9	2.0 Megohm		Volume Control and Switch
P-E94403	R10	40,000 Ohm	3.0	Carbon
P-A95104	R11	100,000 Ohm	0.2	Carbon
P- 98038	R12	4,000 Ohm	2.5	Armored Wire Wound
	R13	390 Ohm	0.5	
	R18	128 Ohm	2.5	
	R19	145 Ohm	3.0	
P-B95603	R14	60,000 Ohm	0.5	Carbon
P-A95603	R15	60,000 Ohm	0.2	Carbon
P- 97011	R16	150,000 Ohm		Tone Control
P-A95203	R17	20,000 Ohm	0.2	Carbon
P- 98037	R20	4,000 Ohm	4.0	Armored Wire Wound
	R21	6,000 Ohm	2.0	

CONDENSERS

Part No.	Code	Capacity	Voltage	Type
P-80919	C1	250 mmf	600V	Moulded
P-2102	C2	3—40 mmf		Short Wave Ant. Trimmer
P-81076	C3	0.05 mf	200V	Tubular
P-81111	C4	0.25 mf	200V	Tubular
P-81117	C5	0.25 mf	200V	Tubular
P-81056	C6	6.0 mf	150V	Dry Electrolytic
	C24	2.0 mf	350V	
P-2102	C7	3—40 mmf		Short Wave Inter. Trimmer
P-81076	C8	0.05 mf	200V	Tubular
P-81076	C9	0.05 mf	200V	Tubular
P-2103	C10	150—250 mmf		Double (Part of 1st I. F. Trans. Trimmer)
	C11	150—250 mmf		
P-2103	C12	150—250 mmf		Double (Part of 2nd I. F. Trans. Trimmer)
	C13	150—250 mmf		
P-1685	C14	40—100 mmf		3rd I. F. Trans. Pri. Trimmer
P-81076	C15	0.05 mf	200V	Tubular
P-81097	C16	0.10 mf	500V	Tubular
	C17			Integral Part of 3rd I. F. Assem.
P-81076	C18	0.05 mf	200V	Tubular
P-81081	C19	35 mmf		Wire Capacitor
P-2112	C20	300—500 mmf		Osc. Std. W. Padding Cond.
P-2102	C21	3—40 mmf		Osc. Sho. W. Trimmer
P-81081	C22	35 mmf		Wire Capacitor
P-81118	C23	0.10 mf	400V	Tubular
P-81096	C25	0.25 mf	400V	Tubular
P-81117	C26	25 mf	200V	Tubular
P-81076	C27	0.05 mf	200V	Tubular
P-81099	C28	0.15 mf	220V	AC Tubular
P-81058	C29	16 mf	450V	Wet Electrolytic
P-82000	C30	30 mf	50V	Dry Electrolytic
P-81039A	C31	16 mf	400V	Wet Electrolytic
P-1685	C32	40—100 mmf		Osc. Sho. W. Padding Cond.
P-80919	C33	250 mmf	600V	Moulded

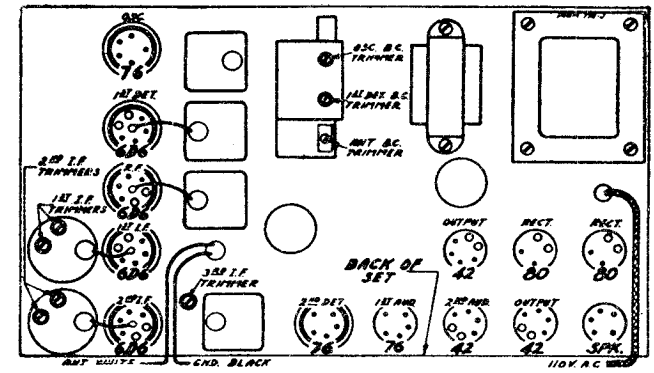

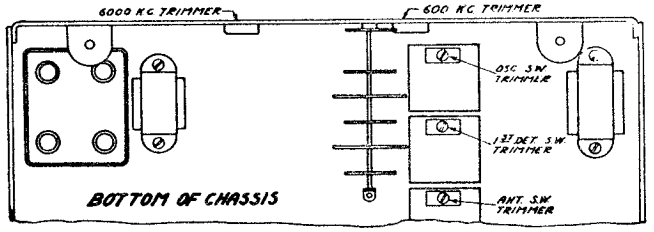

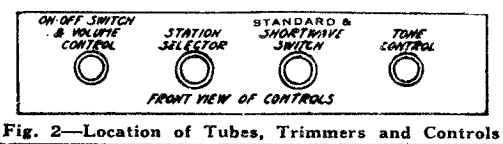

Fig. 2—Location of Tubes, Trimmers and Controls

©John F. Rider, Publisher

SPIEGEL, INC.

Intermediate Frequency Adjustment

Set the signal generator for 456 K. C. Connect the antenna lead of the signal generator to the grid of the 1st detector through a .05 mfd. condenser. Turn the tuning condenser rotor until the plates are completely out. The ground lead from the signal generator goes to the ground lead of the receiver. The volume control should be at the maximum position. Reduce the signal so that A. V. C. action is not obtained.

Then adjust the five I. F. trimmer condensers until maximum output is obtained. The adjusting screws for the 1st and 2nd trimmer condensers are reached from the top of the chassis and are in the round I. F. cans—See Fig. 2. The openings to these trimmer condensers are covered over by small cover plates which are held in position by screws. Loosen these screws until the cover plates can be swung around. **CAUTION - Use an insulated screwdriver for adjust ng trimmers to prevent short circuiting to ground.** In the 3rd I. F. coil, only the primary has a variable trimmer condenser. This condenser is mounted on the top panel of the chassis as shown in Fig. 2 and the adjustment screw is reached through a hole in the top panel.

Standard Wave Band Adjustment

The standard-short wave switch should be in the standard wave position. Set the signal generator for 1740 K. C. Turn the rotor to the full open position. The antenna lead from the signal generator is in this instance connected to the antenna lead of the receiver. Reduce the signal so that A. V. C. action is not obtained. Adjust the oscillator standard wave trimmer until maximum output is obtained. This trimmer is on the tuning condenser and its location is shown in Fig. 2.

Then set the signal generator for 1500 K. C. Turn the rotor until maximum output is obtained. Loosen the set screw in the pointer hub and set the pointer at the 1500 K. C. mark on the standard wave band scale. Retighten the hub set screw. Then adjust the antenna and 1st detector standard wave trimmers until maximum output is obtained.

Next set the signal generator for 600 K. C. and adjust the 600 K. C. trimmer. The adjusting screw is reached through a hole in the front panel of the chassis as shown in Fig. 2. Turn the tuning condenser rotor until maximum output is obtained. Then turn the rotor slowly back and forth over this setting at the same time adjusting the 600 K. C. trimmer screw until the highest output is obtained.

Short Wave Band Adjustment

CAUTION—After the standard wave band alignment as described above has been made, do not change the adjustment of any of the standard wave band trimmers.

In aligning the short wave band of the receiver, it will be noted that the signal will be heard with the signal generator set at two points 912 K. C. apart. That is, if the receiver is tuned to 15,000 K. C. a signal will be heard when the signal generator is set at 15,000 K. C. and again at approximately 15,912 K. C. This is due to image reception or the fact that a 456 K. C. beat is obtained when the signal is 456 K. C. lower than the receiver oscillator and also when the signal is 456 K. C. higher than the receiver oscillator. Care should be taken to see that the receiver is tracked with the signal generator adjusted to the lower of the two frequencies at which a signal is heard, in order that the oscillator in the receiver will be 456 K. C. higher in frequency than the signal.

Turn the standard-short wave switch to the short wave position. Turn the rotor to the full open position. As explained above, the volume control should be at the maximum position and the signal should be reduced to prevent A. V. C. action. Set the signal generator for 18,300 K. C. Then adjust the oscillator short wave trimmer for maximum output. This trimmer is reached from under the chassis and its position is shown in Fig. 2. If a maximum output peak cannot be reached, it may be due to the fact that the antenna and 1st detector short wave trimmers are screwed down too far. Back off these two trimmer screws two or three turns and then adjust the oscillator short wave trimmer for maximum output.

Next set the signal generator for 15,000 K. C. Turn the rotor until maximum output is obtained. Then adjust the antenna and 1st detector short wave trimmers for maximum output.

Next set the signal generator for 6000 K. C. and adjust the 6000 K. C. trimmer. This condenser is mounted on the front panel of the chassis as shown in Fig. 2 and is reached through a hole in the front panel. Turn the tuning condenser rotor until maximum output is obtained. Then turn the rotor slowly back and forth over this setting, at the same time adjusting the 6000 K. C. trimmer screw until the highest output is obtained.

Voltages at Sockets

LINE VOLTAGE — 115
ANTENNA SHORTED TO GROUND

Type of Tube	Function	Across Fila. or Heater	Plate to Cath.	Screen to Cathode	Grid to Cath.	Normal Plate M. A.
6D6	R. F.	6.3	105	105	2.8	8.8
6D6	1st Detector	6.3	95	105	10.0	3.3
76	Oscillator	6.3	115		0.0	5.8 (1) 7.7 (2)
6D6	1st I. F.	6.3	260	105	2.8	8.8
6D6	2nd I. F.	6.3	260	105	3.2	7.2
76	2nd Detector	6.3				
76	1st Audio	6.3	170		11.0	1.2
42	Driver Stage	6.3	235	235	18 (3)	26.5
42	Output	6.3	350	350	38.0	21.0
80	Rectifier	4.6	435			35.5 per plate

(1) Switch in Standard Wave position.
(2) Switch in Short Wave position (No Signal).
(3) Measured across resistor R19.

D. C. Resistance of Windings

Following are the D. C. resistances of the various windings in the chassis.

Part No.	Item	Code	D. C. Resistance in Ohms
P-5176	B. C. Antenna Transformer Primary	T1	28.
	B. C. Antenna Transformer Secondary	T1	4.9
	S. W. Antenna Transformer Primary	T2	.3
	S. W. Antenna Transformer Secondary	T2	Small
P-5241	B. C. & S. W. Interstage R. F. Transformer Primaries in series	T4	2.9
	B. C. Interstage R. F. Trans. Sec.	T4	7.8
	S. W. Interstage R. F. Trans. Sec.	T3	Small
P-5243	1st I. F. Transformer Primary	T5	4.8
	1st I. F. Transformer Secondary	T5	4.8
P-5244	2nd I. F. Transformer Primary	T6	5.
	2nd I. F. Transformer Secondary	T6	5.
P-5245	3rd I. F. Transformer Primary	T7	12.0
	3rd I. F. Transformer Secondary	T7	30.0
P-5183	B. C. Oscillator Grid Coil	T8	3.3
	S. W. Oscillator Grid Coil	T9	Small
	S. W. Oscillator Plate Coil	T9	0.25
P-50653-2B	Audio Input Transformer Primary	T10	400.
	Audio Input Transformer Secondary (Center Top to Inside)	T10	200.
	Audio Input Transformer Secondary (Center Tap to Outside)	T10	280.
P-50642A-2B	Audio Output Transformer primary (Center Tap to Inside)	T11	300.
	Audio Output Transformer Primary (Center Tap to Outside)	T11	340.
	Audio Output Transformer Secondary	T11	.4
P-50620-2B	Power Trans. (115V 60 Cycles) prim.	T12	2.5
	Power Transformer (115V 60 Cycles) H. T. Sec. (Center Tap to Inside)	T12	150.
	H. T. Sec. (Center Tap to Outside)	T12	165.
	Power Transformer (115V 60 Cycles) Secondary (80 Filament)	T12	Small
	Power Transformer (115V 60 Cycles) Secondary A-A (Filament)	T12	Small
P-50650-2B	Power Choke	L1	140.
P-5190	H. F. Oscillator Tracking Coil	L3	1.2
P-5246	2nd I. F. Plate Reactor	L4	57.
P-1925	Speaker Voice Coil		1.6
	Speaker Field Coil	L2	5300.

Power Output

The maximum undistorted power output is 15 watts, measured with a 7000 ohm load resistor connected between the plates of the type 42 PWR tubes. The speaker voice coil must be disconnected for this measurement.

Sensitivity

Standard Wave Band
Over entire band—2 microvolts absolute
Short Wave Band
6.0 MC—5 microvolts absolute
15.0 MC—2 microvolts absolute

©John F. Rider, Publisher

SPIEGEL, INC.

MODELS 4512,9914,9915
9932,9933
Chassis 7700
Schematic,Parts
Voltage

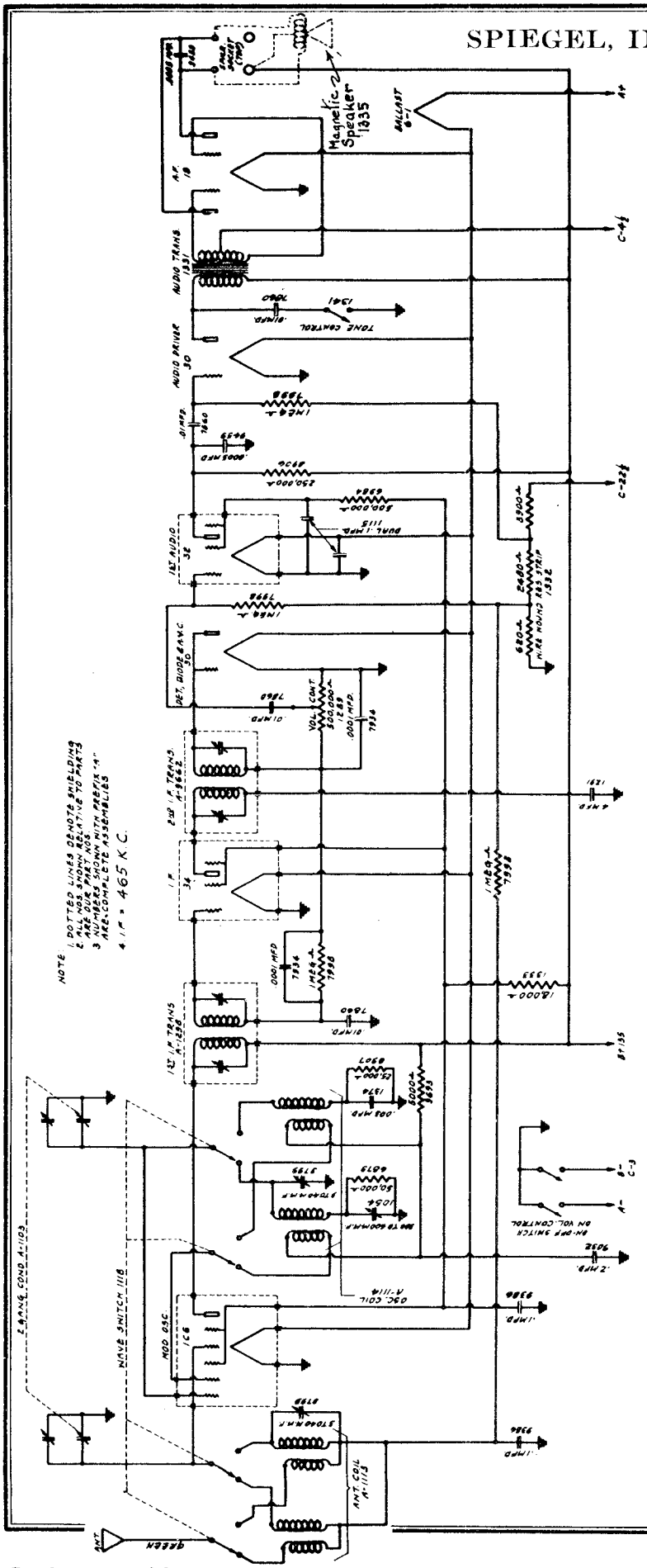

VOLTAGE TABLE
"A" Battery - 3 Volt Dry Cell
"B" Battery - 3 45 Volt "B" Batteries
"C" Battery - 1 22½ Volt Battery

TUBE		FIL.	PLATE	SCREEN	GRID NO.2	GRID NO 3 & 5
106	Oscillator & 1st Detector	2.1	135		115	
30	Second Detector	2.1				67½
34	I. F.	2.1	135	67½		
32	1st Audio	2.1	37.5##	20##		
30	Driver	2.1	135			
19	Output	2.1	135 each plate			

Total "B" Drain - .023 Amperes
Total "A" Drain - .620 Amperes

Comparative voltage only
Read all voltages from socket to chassis

When making tube voltage checks use batteries that deliver full voltage with the receiver turned on.

©John F. Rider, Publisher

MODELS 4512,9914,9915
9932,9933

SPIEGEL, INC.

Alignment, Parts

Chassis 7700

PART NUMBER		LIST PRICE
1113	ANTENNA COIL	$1.63
1114	OSCILLATOR COIL	1.63
1298	1ST I. F. TRANSFORMER	2.05
9662	2ND I. F. TRANSFORMER	2.05
1331	AUDIO TRANSFORMER	1.40
1291	4 MFD. WET ELECTROLYTIC CONDENSER	.85
1115	DUAL .1 MFD. 200 VOLT CONDENSER	.35
7860	.01 MFD. 400 VOLT CONDENSER	.17
9032	.2 MFD. 200 VOLT CONDENSER	.23
9459	.0005 MFD. MICA MOULD CONDENSER	.21
7934	.0001 MFD. MICA MOULD CONDENSER	.21
1374	.003 MFD. MICA MOULD CONDENSER	.21
1332	WIRE WOUND RESISTOR STRIP	.35
7998	1 MEG OHM 1/3 WATT RESISTOR	.19
6984	500,000 OHM 1/3 WATT RESISTOR	.19
8906	250,000 OHMS 1/3 WATT RESISTOR	.19
6879	50,000 OHM 1/3 WATT RESISTOR	.19
1335	SPEAKER	6.25
1118	WAVE SWITCH	.75
1333	18,000 OHM 1/2 WATT RESISTOR	.19
9693	5,000 OHM 1/3 WATT RESISTOR	.19
8907	25,000 OHM 1/3 WATT RESISTOR	.19
1292	6 CONDUCTOR BATTERY CABLE	.68
1289	VOLUME CONTROL WITH D. P. S. T. SWITCH	1.24
1341	TONE CONTROL SWITCH	.40

PART NUMBER		LIST PRICE
1103	TWO GANG CONDENSER USED WITH EARLY TYPE DIAL	$3.93
1657	TWO GANG CONDENSER USED WITH AEROPLANE TYPE DIAL	4.00
1106	DRIVE DISC WITH METAL HUB	.32
1641	CALIBRATED DIAL (CALIBRATION #1371) WITH FRAME AND GASKET	.50
1641	CALIBRATED DIAL (CALIBRATION #1653) WITH FRAME AND GASKET	.50
1744	CALIBRATED DIAL (CALIBRATION #1405) WITH FRAME AND GASKET	.50
1744	CALIBRATED DIAL (CALIBRATION #1745) WITH FRAME AND GASKET	.50
	GLASS FOR ABOVE DIALS	.35
1206	ESCUTCHEON PLATE MARKED FOREIGN AND BROADCAST	.13
1207	ESCUTCHEON PLATE MARKED ON AND OFF	.13
1361	TUBE SHIELD	.15
9988	TUBE SHIELD	.11
1053	PADDING CONDENSER	.50
1054	PADDING CONDENSER	.55
9799	TRIMMER CONDENSER	.15
6-1	VOLTAGE REGULATOR TUBE	3.00
1179	KNOB, LARGE	.15
1180	KNOB, SMALL WITH DOT	.14
9758	KNOB, SMALL	.17
1370	TUNING DIAL EARLY TYPE	.30

PRICES ARE SUBJECT TO CHANGE WITHOUT NOTICE.

SERVICE NOTES
for the
BATTERY OPERATED
SEVEN TUBE SUPERHETERODYNE RECEIVER

ALIGNMENT PROCEDURE: For properly aligning either the intermediate transformer or the gang condenser it is necessary that an accurately calibrated oscillator be used with some type of output measuring device.

INTERMEDIATE ALIGNMENT:

1. Connect the high side of the oscillator output to the control grid of the 1C6 tube leaving the grid cap disconnected. Connect the ground side of the oscillator to the receiver chassis.

2. Set the test oscillator frequency to 465 kilocycles (this must be accurate).

3. Align the first intermediate ansformer by turning one of the trimmer screws up and down until maximum reading is obtained on the output meter, and then adjust the other trimmer screw of the same transformer for maximum sensitivity.

4. Adjust the second intermediate transformer in the same manner.

NOTE: Two type intermediate transformer trimmers have been used in this receiver. One type has two parallel slots in the top of the shield, one for each trimmer. The other type has a brass hex nut for adjusting one trimmer, the other intermediate trimmer being adjusted with the trimmer screw located inside of the brass hex nut. Regardless of which type trimmer is used the procedure is the same.

TO ALIGN THE VARIABLE CONDENSER: It is important when aligning to follow the procedure carefully, otherwise the receiver will lack sensitivity and the dial calibration will be incorrect.

1. Connect the high output side of the oscillator to the receiver antenna lead and the ground to the chassis.

2. Place the band selector switch for operation on the short wave band, tune the receiver to exactly 15 megacycles on the dial and set the test oscillator frequency to exactly 15 megacycles. THEN TUNE IN THE 15 MEGACYCLE SIGNAL BY ADJUSTING THE TRIMMER MOUNTED ON TOP OF THE OSCILLATOR SECTION OF THE GANG CONDENSER TO MAXIMUM OUTPUT.

Looking at the front of the receiver the oscillator section is the rear section of the gang condenser.

3. Set the band selector switch for operation on the broadcast band, adjust the test oscillator frequency to 1400 kilocycles and set the receiver dial to exactly 1400 kilocycles. NEXT, BRING IN THE 1400 KILOCYCLE SIGNAL TO MAXIMUM OUTPUT BY ADJUSTING THE TRIMMER LOCATED UNDERNEATH AND NEAR THE CENTER FRONT OF THE CHASSIS.

4. After making this adjustment tune the dial to 1720 kilocycles and set theoscillator frequency to 1720 kilocycles. If the 1720 kilocycle signal cannot be received reduce the 1400 kilocycle trimmer capacity until the 1720 kilocycle signal is brought in.

5. Next, set the receiver dial and test oscillator to exactly 1400 kilocycles, and adjust the trimmer located on the front section of the gang condenser for maximum sensitivity.

6. Leave the band selector switch for operation on the broadcast band, tune the receiver and set the oscillator to approximately 600 kilocycles. Then adjust the 600 kilocycle padding condenser, which is located on and accessible through the small hole in the front of the chassis, for maximum sensitivity. As this adjustment is quite critical it is necessary to rock the condenser slightly to the right and left to find the point of greatest sensitivity.

7. Place the band selector switch for operation on the short wave band, adjust the test oscillator frequency to exactly 15 megacycles and set the receiver dial to 15 megacycles. Turn the receiver on its back with the dial up and adjust the trimmer, which is mounted on the top of the coil underneath and near the right hand side of the chassis, for maximum output. Be sure to rock the condenser slightly to the right and left when making this adjustment.

This completes the alignment procedure. It is recommended that all of the adjustments be gone over again generally it will be found that improved results can be obtained if this is done.

©John F. Rider, Publisher

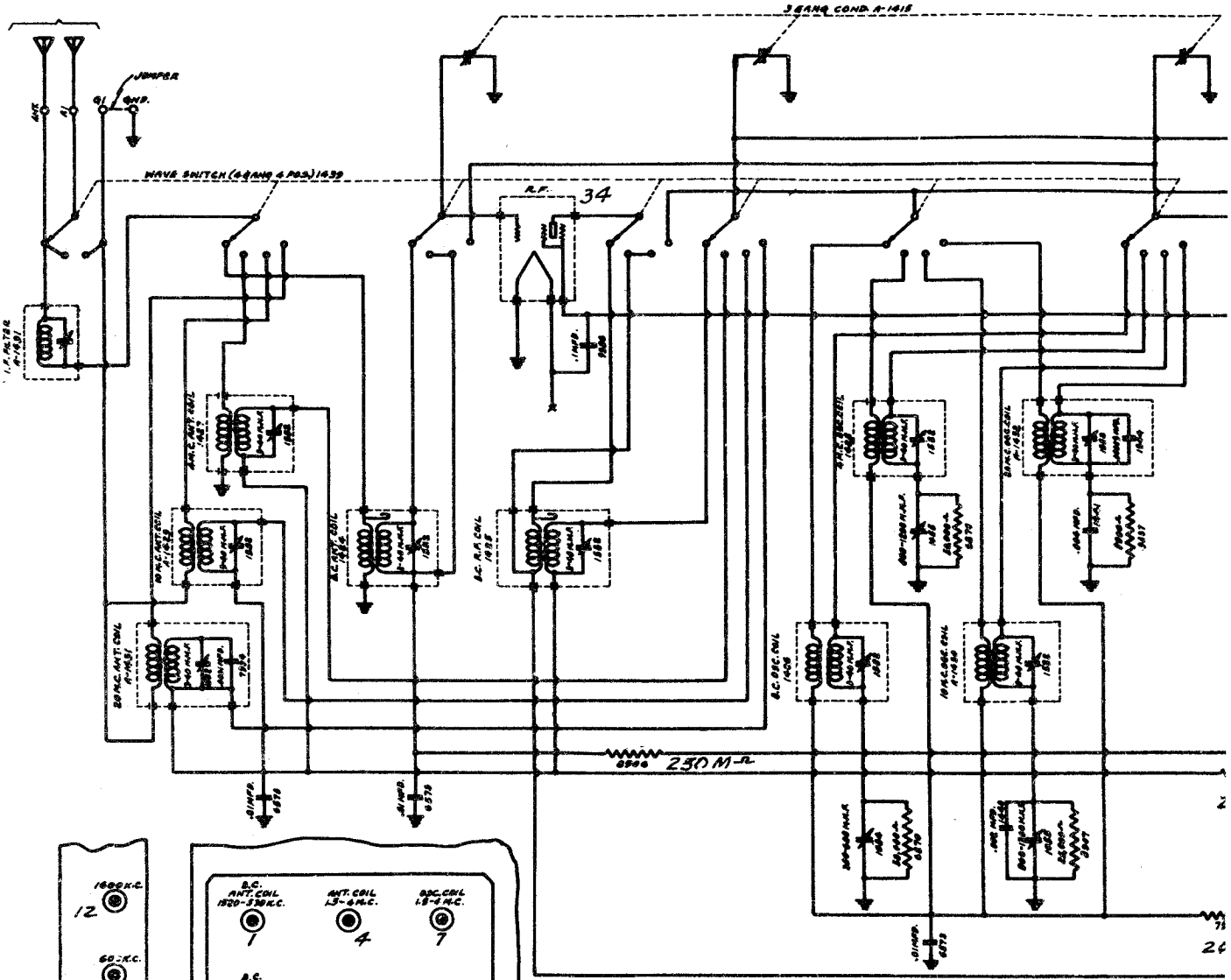

NOTE:
1. DOTTED LINES DENOTE SHIELDING.
2. ALL NOS. SHOWN RELATIVE TO PARTS ARE OUR PART NUMBERS
3. NUMBERS SHOWN WITH PREFIX "A" ARE COMPLETE ASSEMBLIES.
4. I.F. = 465 K.C.

VOLTAGE TABLE

"A" Battery - 3 Volt Dry Cell
"B" Battery - 3 45 Volt "B" Battery
"C" Battery - 1 22½ Volt "C" Battery

TUBE		FILAMENT	PLATE	SCREEN	GRID NO. 2	GRID NO. 3 & 5
106	Oscillator & 1st Detector	1.9	135		135	75
34	Radio Frequency	1.9	135	75		
34	1st Intermediate Frequency	1.9	135	75		
34	2nd Intermediate Frequency	1.9	135	75		
30	2nd Detector & AVC	1.9				
30	1st Audio	1.9	60#	(Total "A" Drain 600 M.A.)		
30	Audio Driver	1.9	125	(Total "B" Drain 23 M. A. with no si		
30	Output	1.9	125			
30	Output	1.9	125			

Comparative voltage only. Read all voltages from socket to chassis with 1,000 ohm per vol
When making voltage checks use batteries that deliver full voltage with the receiver turn

NOTE: NEVER LIFT THE RECEIVER BY G
ING THE RECEIVER.

©John F. Rider, Publisher

NC.

MODEL 4514
Chassis 9148
Schematic, Voltage
Trimmers, Batt. Data

1935

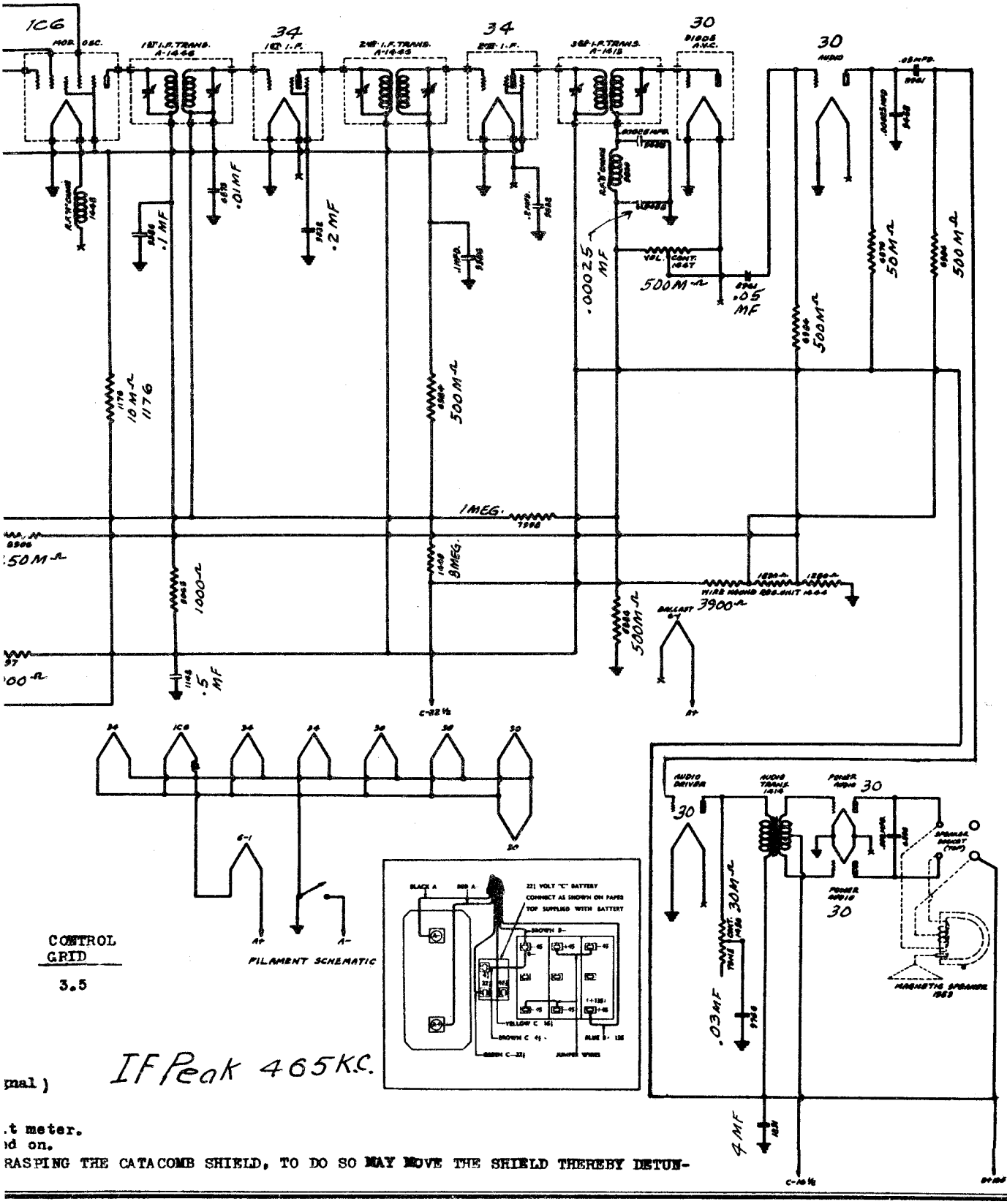

IF Peak 465 K.C.

nal)

.t meter.
)d on.
RASPING THE CATACOMB SHIELD, TO DO SO MAY MOVE THE SHIELD THEREBY DETUN-

SPIEGEL, INC.

MODEL 4514
Chassis 9148
Alignment

INTERMEDIATE ALIGNMENT:

1. Connect the high side of the oscillator output to the control grid of the 1C6 tube, leaving the grid cap disconnected. Connect the ground side of the oscillator to the receiver ground post.

2. Set the test oscillator frequency to 465 kilocycles. (This must be accurate).

3. Align the first intermediate transformer by turning one of the trimmer screws up and down (increasing and decreasing capacity) until maximum reading is obtained on the output meter, after which adjust the other trimmer screw of the same transformer for maximum sensitivity.

4. Adjust the other intermediate transformers in the same manner.

TO ALIGN THE VARIABLE CONDENSER:

Adjustment of the trimmer condensers, located inside of and accessible through the holes found in the top of the catacomb (mounted on top and in the left hand front corner of the receiver) will be referred to by numbers as indicated on the circuit diagram showing the relative location of these trimmers.

1. Connect the high output side of the oscillator through a 250 mmfd. (.00025 Mfd.) to the receiver antenna post and the ground to the ground post.

2. Place the band selector switch for operation on the 1520 to 535 kilocycle band (broadcast), tune the receiver to exactly 1400 kilocycles on the dial and set the test oscillator frequency to exactly 1400 kilocycles. THEN BRING IN THE 1400 KILOCYCLE SIGNAL TO MAXIMUM OUTPUT BY ADJUSTING TRIMMER MARKED No. 2 ON CATACOMB DIAGRAM, after which adjust No. 1 and No. 3 trimmers in the order named for maximum sensitivity.

3. Leave the band selector switch for operation on the broadcast band (1520-535 kilocycles) and tune the receiver and set the test oscillator to approximately 600 kilocycles. Then while rocking the condenser slightly to the right and left adjust the 600 kilocycle padding condenser No. 11, which is located on and accessible through the hole provided on the left hand side of the chassis, for maximum sensitivity.

4. Recheck the alignment at 1400 kilocycles as the 600 kilocycle adjustment may have changed the alignment at 1400 kilocycles.

5. Place the band selector switch for operation on the 1.5 to 4.2 megacycle band and set the test oscillator frequency and tune the receiver dial to EXACTLY 3.8 MEGACYCLES. THEN TUNE IN THIS 3.8 MEGACYCLE SIGNAL TO MAXIMUM OUTPUT BY ADJUSTING CATACOMB TRIMMER NO. 7. Next adjust catacomb trimmer No. 4 for maximum sensitivity.

6. With the band selector switch in the same position (1.5-4.2 megacycle band) tune the receiver dial and set the oscillator frequency to approximately 1600 kilocycles, and then while rocking the variable condenser slightly to the right and left adjust the 1600 kilocycle trimmer No. 12 located on the left hand side of the chassis for maximum sensitivity.

7. Recheck 3.8 megacycle adjustments.

8. Adjust the band selector switch for operation on the 4 to 11 megacycle band and tune the receiver dial and set the oscillator frequency to exactly 10.5 megacycles. When adjusting catacomb trimmer No. 5 two peaks (the fundamental and the image peak) will be noticed. CARE MUST BE TAKEN SO THAT THE FUNDAMENTAL PEAK AND NOT THE IMAGE PEAK IS USED FOR ALIGNING THE RECEIVER AT 10.5 MEGACYCLES. First back off catacomb trimmer No. 5 to minimum capacity, next screw down the trimmer (add capacity) until the first peak which is the fundamental and the one you are to use is tuned in. If the trimmer is screwed down beyond the point where this first peak is received the incorrect image peak will be tuned in. When the first peak has been located adjust catacomb trimmer No. 5 to BRING IN THE 10.5 MEGACYCLE SIGNAL TO MAXIMUM OUTPUT After completing this adjustment always check to see if the proper peak has been used. To do this leave the test oscillator frequency at 10.5 megacycles, increase its output, and tune the receiver dial to approximately 9.5 megacycles. Vary the receiver dial slightly to the right and left of 9.5 megacycles and if the fundamental peak was used in aligning at 10.5 megacycles the test oscillator signal will be heard at approximately 9.5 megacycles on set dial. If it is not possible to receive the signal then the fundamental peak was not used and the 10.5 megacycle adjustment of trimmer No. 5 must be gone over and properly adjusted. After correctly completing catacomb trimmer No. 5 adjustment adjust catacomb trimmer No. 6 for maximum sensitivity. Should two peaks be noticed with this trimmer always adjust trimmer No. 6 to the one that requires the most capacity.

9. With the band selector switch adjusted for operation on the same band (4-11 megacycles) set the test oscillator frequency and tune the receiver dial to approximately 4.8 megacycles. Then while rocking the variable condenser slightly to the right and left adjust the 4.8 megacycle trimmer No. 10, located on the left hand side of the chassis for maximum sensitivity.

10. Recheck the 10.5 megacycle adjustment.

11. Adjust the band selector switch for operation on the 10 to 20 megacycle band, tune the receiver dial and set the oscillator frequency to exactly 19 megacycles. When adjusting catacomb trimmer No. 8 two peaks (the fundamental and the image peak) will be noticed. CARE MUST BE TAKEN SO THAT THE FUNDAMENTAL PEAK AND NOT THE IMAGE PEAK IS USED FOR ALIGNING THE RECEIVER AT 19 MEGACYCLES. First back off catacomb trimmer No. 8 to minimum capacity, next screw down the trimmer (add capacity) until the first peak which is the fundamental and the one you are to use is tuned in. If the trimmer is screwed down beyond the point where this first peak is received the incorrect image peak will be tuned in. When the first peak has been located adjust catacomb trimmer No. 8 to BRING IN THE 19 MEGACYCLE SIGNAL TO MAXIMUM OUTPUT. After completing this adjustment always check to see if the proper peak has been used. To do this leave the test oscillator frequency at 19 megacycles, increase its output, and tune the receiver dial to approximately 18 megacycles. Vary the receiver dial slightly to the right and left of 18 megacycles and if the fundamental peak was used in aligning at 19 megacycles the test oscillator signal will be heard at approximately 18 megacycles on set dial. If it is not possible to receive the signal then the fundamental peak was used and the 19 megacycle adjustment of trimmer No. 8 must be gone over and properly adjusted. After correctly completing catacomb trimmer No. 8 adjustment adjust catacomb trimmer No. 9 for maximum sensitivity. Should two peaks be noticed with this trimmer always adjust trimmer No. 9 to the one that requires the most capacity.

12. Some code and aircraft signals are broadcast on a frequency exactly the same or near the IF frequency of the receiver. To eliminate interference from these signals a 465 kilocycle filter (mounted in the coil shield located underneath and towards the front of the chassis) is incorporated in the set. To adjust, set the oscillator frequency (with oscillator output connected to set antenna and ground) TO EXACTLY 465 KILOCYCLES, turn the receiver on end and adjust the trimmer located on and accessible through the top of the filter shield for MINIMUM 465 KILOCYCLE SIGNAL.

©John F. Rider, Publisher

©John F. Rider, Publisher

NOTE:
1. DOTTED LINES DENOTE SHIELDING.
2. ALL NOS. SHOWN RELATIVE TO PARTS ARE OUR PART NOS.
3. NUMBERS SHOWN WITH PREFIX "A" ARE COMPLETE ASSEMBLIES.

2 GANG COND. A-1321

I.F. = 465 K.C.

VOLTAGE TABLE

Tube	Fil.	Plate	Screen	Grid#2	Grid #3-#4	Con.Grid
Osc.-Mixer	2.1	135		135	67.5	2.6
I-F	2.1	135	67.5			
2nd Det. AVC	2.1					
1st A-F	2.1	45##	20##			.1##
Output	2.1	135				-5##

Comparative voltage only. Read all voltages from socket to chassis. Total "B" drain .023 ampere. Total "A" drain .5 ampere.

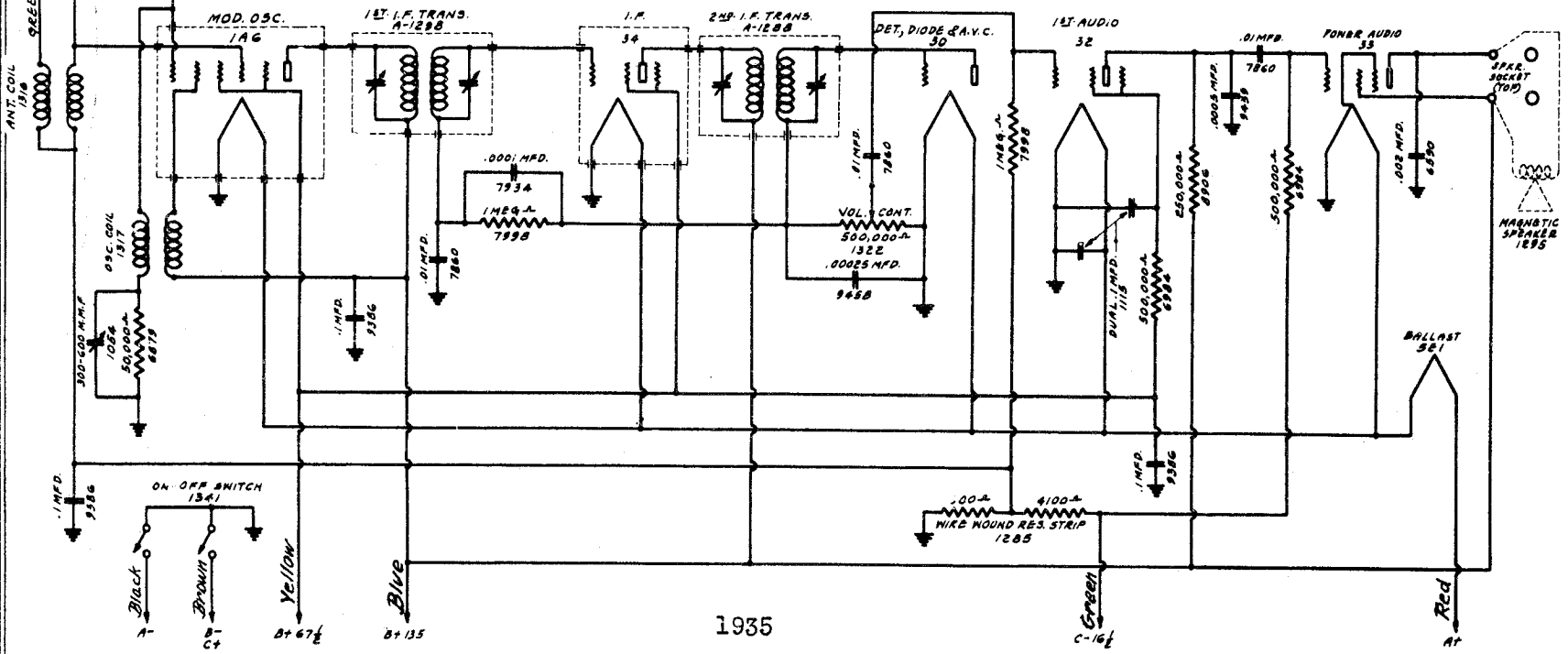

1935

INTERMEDIATE ALIGNMENT

Align at 465 kc. Two types of i-f trimmers are used in this receiver. One type has two parallel holes in the top of the shield, one for each trimmer. The other type has a brass hex nut for one trimmer, the other intermediate trimmer being adjusted by means of of the trimmer screw located within the brass hex nut.

MIXER-OSCILLATOR ALIGNMENT

Connect test oscillator to antenna post and ground or chassis. Set test oscillator and receiver dial to 1720 kc. Then adjust trimmer condenser located on top of the oscillator (front section) unit of the gang condenser.

Then tune the receiver to 600 kc. and reset the test oscillator to this frequency. Then rock the tuning condenser slightly to the right and left, while adjusting the 600 kc. oscillator padding condenser, which is accessible through the hole provided on the front of the chassis. Repeat all the adjustments for maximum output.

SPIEGEL, INC.

MODEL 5102
Chassis 1070B
Schematic, Voltage
Socket

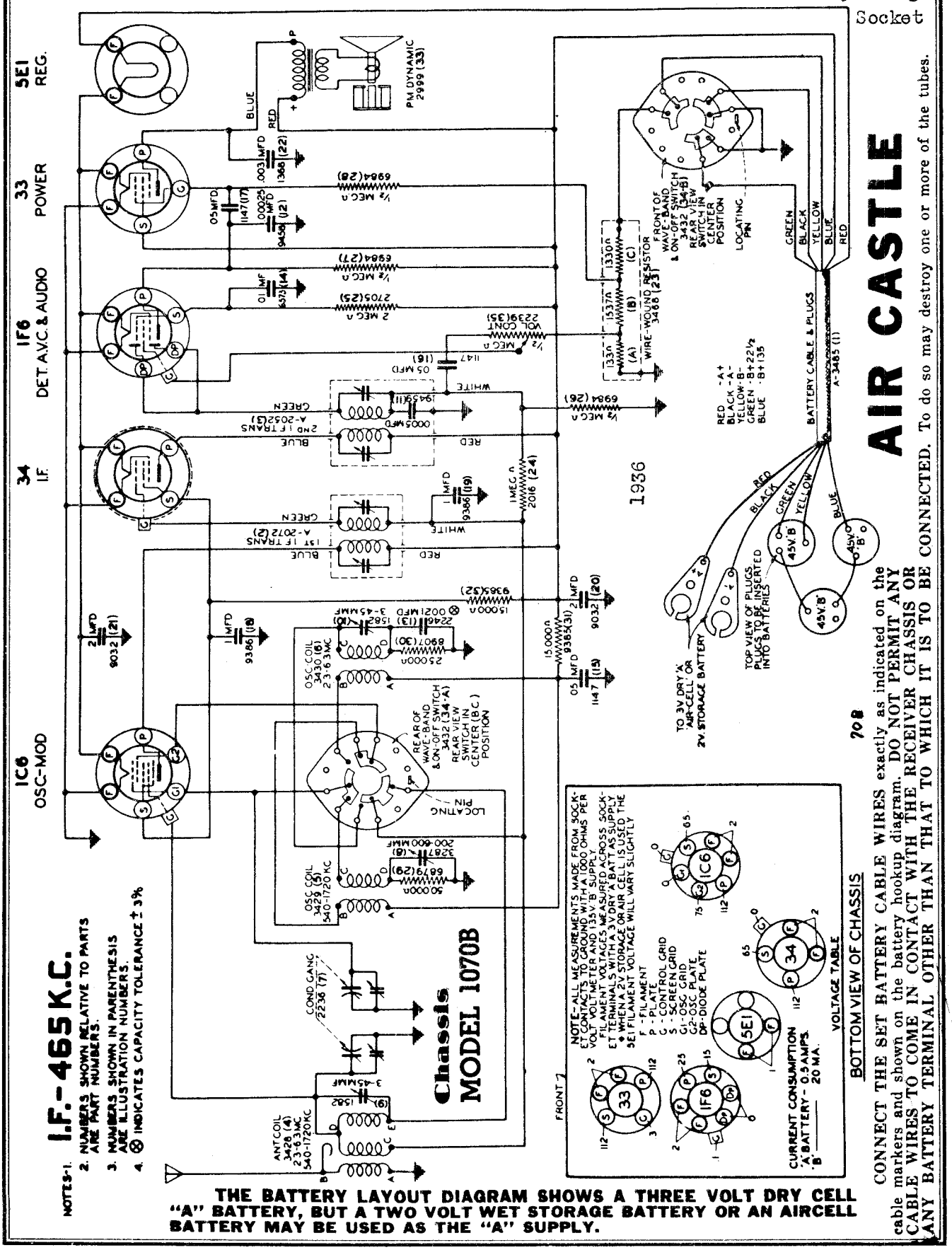

©John F. Rider, Publisher

©John F. Rider, Publisher

Alignment of this receiver should never be necessary unless one of the coils has been replaced.

Lack of sensitivity, selectivity or poor tone quality may be due to any one or a combination of causes such as weak or defective tubes or speaker, open or grounded bias resistor, bypass condenser, inadequate or excessively long antenna, improperly connected or low batteries, etc. Never attempt to realign set until all other possible sources of trouble have been first thoroughly investigated and definitely proven not to be the cause.

NOTE: BE SURE TO FOLLOW PROCEDURE CAREFULLY WHEN ALIGNING, OTHERWISE THE RECEIVER WILL BE INSENSITIVE AND THE DIAL CALIBRATION WILL BE INCORRECT. THE TRIMMER AND PADDING CONDENSERS WILL BE REFERRED TO BY THEIR FUNCTION.

IT IS ABSOLUTELY NECESSARY THAT AN ACCURATELY CALIBRATED TEST OSCILLATOR WITH SOME TYPE OF OUTPUT MEASURING DEVICE BE USED WHEN ALIGNING THE RECEIVER.

ALIGNING I. F. STAGE AT 465 KILOCYCLES:

(a) Connect the ground lead of the test oscillator to the chassis or set ground lead. Connect the other lead of the test oscillator to the grid cap of the 1C6 tube through a .02 Mfd. series condenser. DO NOT REMOVE GRID CLIP.
(b) Set test oscillator to EXACTLY 465 kilocycles and turn receiver volume control on full.
(c) Peak each of the second I.F. transformer trimmers.
(d) Peak each of the first I.F. transformer trimmers.
To assure most accurate trimmer setting repeat above adjustment several times always using lowest possible test oscillator output consistent with readable output meter scale deflection.

ALIGNING 1720-540 KILOCYCLE BAND:

(a) Remove test oscillator lead from grid of the 1C6 tube and attach it to the receiver antenna lead through a .00025 Mfd. series condenser.
(b) Check tuning dial adjustment by turning gang condenser until plates touch maximum capacity stop (completely in mesh), at which point the dial needle must be exactly even with the last line at the low frequency end of the dial calibration. If the dial needle does not point exactly to the last line move needle to correct position.
(c) Set receiver dial and test oscillator frequency to EXACTLY 1720 kilocycles.
(d) Bring in 1720 KC test oscillator signal to maximum output by adjusting the trimmer condenser mounted on top of the oscillator section of the gang condenser.
Looking at the front of the receiver the rear section of the gang condenser is the oscillator section.
(e) Tune receiver dial and set test oscillator frequency to EXACTLY 1400 kilocycles.
(f) Adjust trimmer on top of the front section gang condenser (antenna section) for maximum 1400 kilocycle test signal response.
(g) Tune receiver dial and set test oscillator frequency to approximately 600 kilocycles.
(h) While rocking the tuning condenser back and forth adjust 600 KC oscillator padder condenser which is accessible through the hole in the top of the chassis adjacent to the gang condenser for maximum 600 kilocycle signal response.

ALIGNING 2.3-6.3 MEGACYCLE BAND:

(a) Replace .00025 Mfd. condenser in series with test oscillator lead with a 400 ohm resistor.
(b) Place band selector switch for operation on 2.3-6.3 megacycle band, tune the receiver dial, and set test oscillator frequency to EXACTLY 6.3 MEGACYCLES.
(c) BRING IN 6.3 MEGACYCLE SIGNAL TO MAXIMUM OUTPUT by adjusting 6.3 megacycle oscillator trimmer, which is mounted on top of coil located underneath chassis.
(d) Tune receiver dial and set test oscillator frequency to EXACTLY 6 MEGACYCLES.
(e) Adjust 6 megacycle antenna trimmer which is mounted on coil located on top of chassis for maximum 6 megacycle signal sensitivity.

Illus. No.	*Part No.*	*Part Name*	*Description*
1	3485	Cable	5 Conductor Battery With Plugs
2	2072	Coil	1st I.F. Transformer
3	2052	Coil	2nd I.F. Transformer
*4	3428	Coil	Antenna, 1720-540 K.C. 2.3-6.3 M.C. Band
5	3429	Coil	Oscillator, 1720-540 K.C. Band
6	3430	Coil	Oscillator, 2.3-6.3 M.C. Band
7	2236	Condenser	2 Gang Tuning
8	3287	Condenser	Padding (340-460 M.M.F.)
9	1582	Condenser	Trimmer (3-45 M.M.F.)
10	1582	Condenser	Trimmer (3-45 M.M.F.)
11	9459	Condenser	Mica .0005 Mfd.
12	9458	Condenser	Mica .00025 Mfd.
**13	2246	Condenser	Mica .0021 Mfd. (Yellow Dot)
14	6573	Condenser	Tubular .01 Mfd. 200 Volt
15	1147	Condenser	Tubular .05 Mfd. 200 Volt
16	1147	Condenser	Tubular .05 Mfd. 200 Volt
17	1147	Condenser	Tubular .05 Mfd. 200 Volt
18	9386	Condenser	Tubular .1 Mfd. 200 Volt
19	9386	Condenser	Tubular .1 Mfd. 200 Volt
20	9032	Condenser	Tubular .2 Mfd. 200 Volt
21	9032	Condenser	Tubular .2 Mfd. 200 Volt
22	1368	Condenser	Tubular .003 Mfd. 400 Volt
23	3468	Resistor	Wire Wound
24	2016	Resistor	Carbon 1 Meg Ohm 1/3 Watt Ins.
25	2705	Resistor	Carbon 2 Meg Ohm 1/3 Watt
26	6984	Resistor	Carbon ½ Meg Ohm 1/3 Watt
27	6984	Resistor	Carbon ½ Meg Ohm 1/3 Watt
28	6984	Resistor	Carbon ½ Meg Ohm 1/3 Watt
29	6879	Resistor	Carbon 50.000 Ohm 1/3 Watt
30	8907	Resistor	Carbon 25.000 Ohm 1/3 Watt
31	9385	Resistor	Carbon 15.000 Ohm 1/3 Watt
32	9385	Resistor	Carbon 15.000 Ohm 1/3 Watt
33	2999	Speaker	P.M. Dynamic (6")
34	3432	Switch	"On-Off" and Band Selector
35	2239	Volume Control	
36	3647	Condenser	Mica .0019
37		Coil	Antenna 1720-540 & 2.3-6.3 M. C. Band

*Replaced by No. 36
**Replaced by No. 37

MISCELLANEOUS

9987	Base	Tube Shield
3507	Dial Assem.	Complete Tuning
3325	Dial Scale	Calibrated Scale
2795	Dial Indicator	"On-Off" Scale
2796	Esc. with Glass	For Dial
3031	Knob	Small
3032	Knob	Large
3043	Pointer	For Tuning Dial
3488	Shield	Tube

PART No. 3565—70B

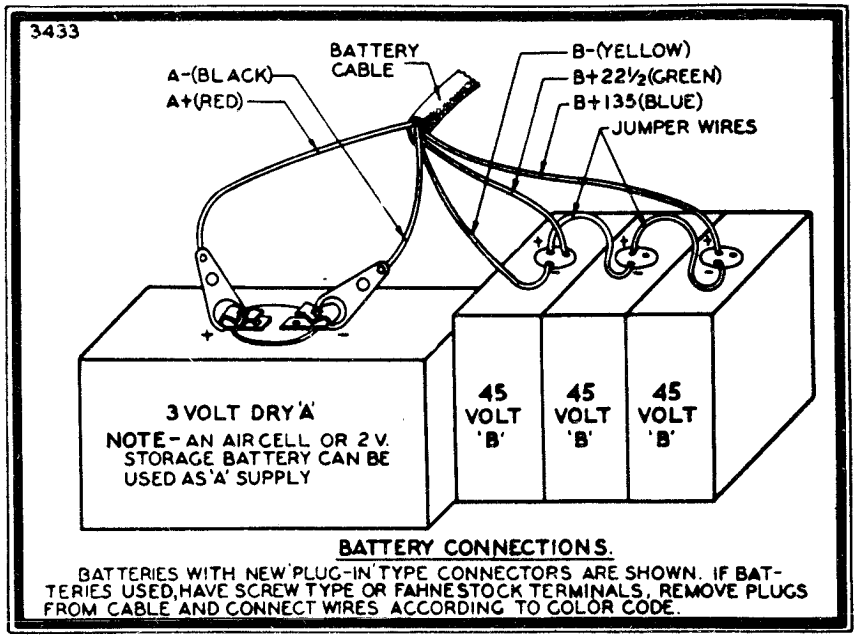

BATTERY CONNECTIONS.

BATTERIES WITH NEW PLUG-IN TYPE CONNECTORS ARE SHOWN. IF BATTERIES USED, HAVE SCREW TYPE OR FAHNESTOCK TERMINALS, REMOVE PLUGS FROM CABLE AND CONNECT WIRES ACCORDING TO COLOR CODE.

SPIEGEL, INC.

1937

MODELS 5058,5060
Chassis 613
MODEL 6504
Chassis 601
Schematics, Voltage
Socket, Trimmers
Alignment, Parts

BOTH CHASSIS HAVE CONVENTIONAL ALIGNMENT. SEE SPECIAL SECTION OF VOLUME VIII

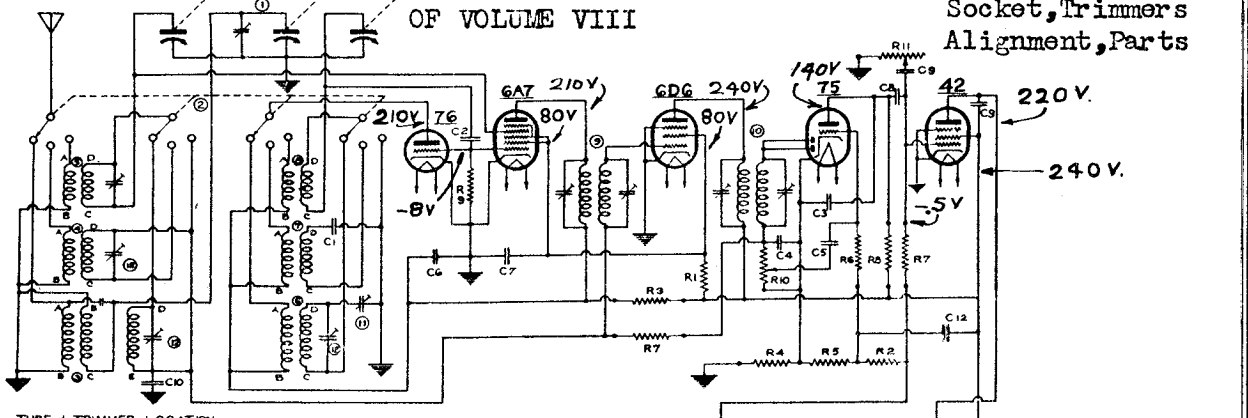

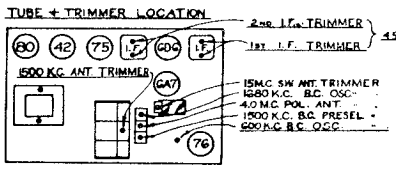

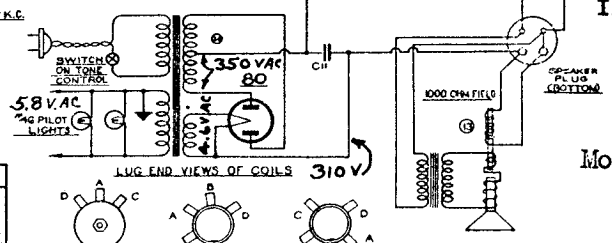

Model 6504

CIRCUIT DATA

	PART No.	DESCRIPTION
C1	18000c	.0009 MFD. MICA 3%
C2	1803	.00005 " "
C3	1802	.0005 " "
C4	1804	.00028 " "
C5	1605	.02 " 400 v
C6	1802	.1 " 600 v
C7	1801	.1 " 400 v
C8	1448	.03 " 600 v
C9	1651	.004 " "
C10	1622	.05 " 200 v
C11	18-208	10.0 ELECTROLYTIC
C12	18 201	12.0 "
R1	6211	15 000 OHMS 1W.
R2	60-100	2.00 " 1W 5%
R3	6115	1000 " ½ W. "
R4	60-103	30 " " 5%
R5	60-104	20 " " "
R6	6020	2.0 MEG. " ⅓W "

	PART No.	DESCRIPTION
R7	6018	600,000 OHMS ⅓ W
R8	6024	250 000 " "
R9	6025	50000 " "
R10	84-101	500 000 VOL. CONTR
R11	86-101	500 000 TONE CONTR
1	19-106	GANG
2	69-103	SWITCH
3	10-137	B.C. ANT. + PRESELECTOR
4	10-135	POL. " COIL
5	10-132	S.W. " "
6	10-134	B.C. OSC. " "
7	10-136	POL. " "
8	10-133	S.W. " "
9	1123	1ST I.F.
10	1124	2ND I.F.
11	20-100	B.C. OSC. PADDER
12	20-101	TRIMMER + GANG
13		SPEAKER
14	80-105	POWER TRANSF.

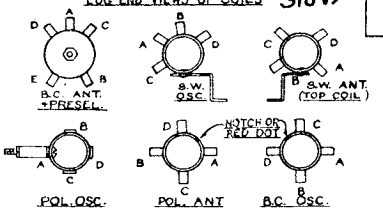

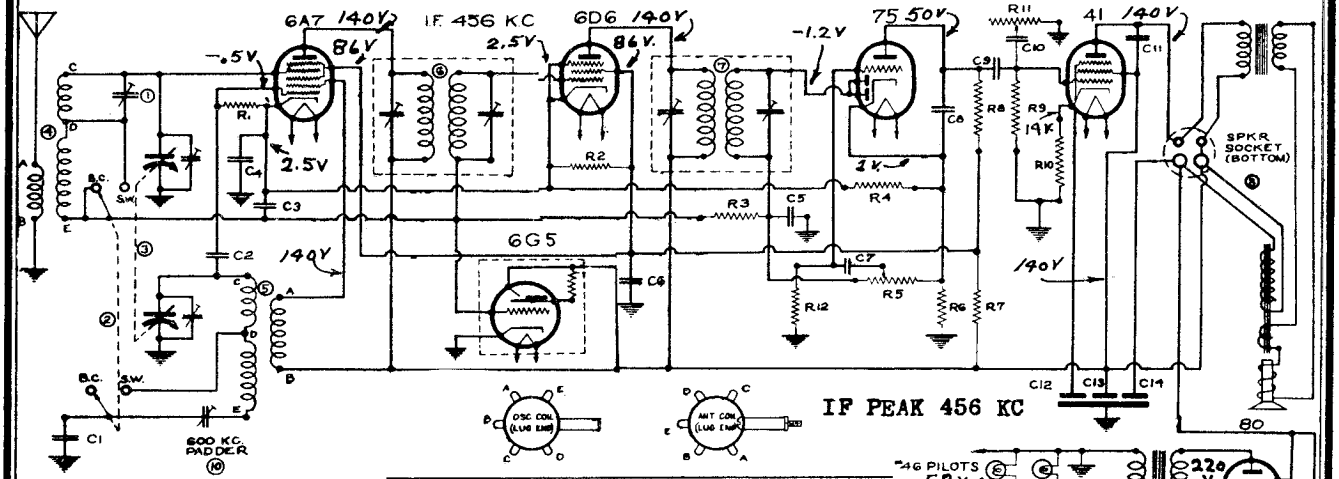

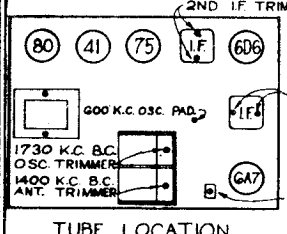

TUBE LOCATION

CIRCUIT DATA

	PART No.	DESCRIPTION
C1	15-100	.00157 MFD
C2	1501	.0001 "
C3	19128	.05 " 200v
C4	1614	.25 " "
C5	1504	.00025 " "
C6	1607	.05 " 400v
C7	1603	.01 " "
C8	1504	.00025 " "
C9	1603	.01 " "
C10	1651	.004 " 600v
C11	1651	.004 " 600v
C12	18-102	4 MFD 25v YELLOW
C13		4 " 250v GREEN
C14		8 " 250v RED
1	2054	3 W ANT TRIMMER
2	6922	WAVE BAND SW
3	19-107	GANG COND.
4	10-185	ANT. COIL

	PART No.	DESCRIPTION
R1	6028	40,000 OHMS ⅓ W
R2	6117	25,000 " ½ W
R3	6018	500,000 " ⅓ W
R4	6011	100 " "
R5	24-101	500,000 " VOL. CONT
R6	6009	50 " ⅓ W
R7	6105	10,000 " ½ W
R8	6056	200,000 " ⅓ W
R9	6018	500,000 " "
R10	6052	800 " "
R11	26-101	500,000 " TONE CONT
R12	6017	10 MEG "
5	10-147	OSC. COIL
6	1123	1ST I.F.
7	1124	2ND I.F.
8	79-204	6 INCH SPEAKER
9	80-104	POWER TRANSFORMER
10	20-100	PADDER
6	79-206	8 INCH SPEAKER

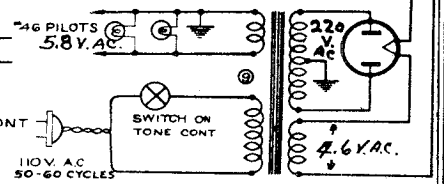

Models 5058,5060

©John F. Rider, Publisher

MODELS 5200,5210,5214,5216
Chassis 651
MODEL 6590
Chassis 633
Schematics, Voltage

SPIEGEL, INC.

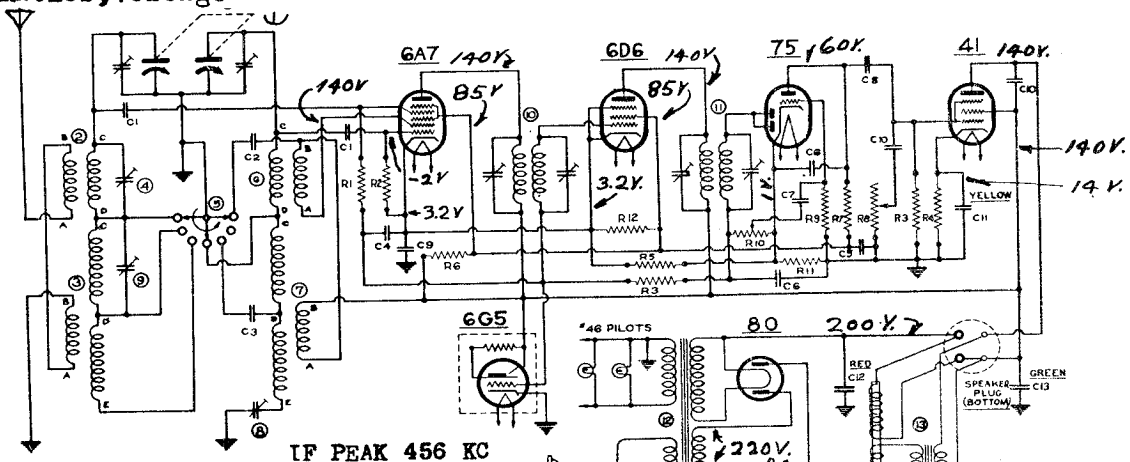

IF PEAK 456 KC

Chassis 633

CIRCUIT DATA

	PART No.	DESCN
C1	1501	.0001 MFD MICA
C2	1509	.002 " "
C3	15-101	.00157 " " 3%
C4	1622	.05 " " 200v
C5	1607	.05 " " 400v
C6	1504	.00025 " MICA
C7	1603	.01 " " 400v
C8	1603	.01 " " 400v
C9	1614	.25 " " 200v
C10	1651	.004 " " 600v
C11	18-102	.4 MFD -25+ ELECTC
C12		.6 " " 50v
C13		.4 " " 250v
R1	6020	2 MEG OHM 1/3 W
R2	6028	40,000 " "
R3	6018	500,000 " "
R4	6052	800 " "
R5	6011	100 " "
R6	6105	10,000 " 1/2 W
R7	6056	200,000 " 1/3 W
R8	26-101	500,000 ^ TONE CONT.
R9	6017	1 MEG OHM 1/3 W
R10	24-101	5,000,000 " VOL. CT
R11	6009	50 " 1/3 W
R12	6117	25,000 " 1/2 W

	PART No.	DESCN
1	19-107	GANG COND.
2	10-124	S.W. ANT COIL
3	10-129	POL + B.C. ANT.
4	2052	S.W. ANT TRIMMER
5	69-102	WAVE SWITCH
6	10-127	S.W. OSC. COIL
7	10-128	POL + B.C. OSC. COIL
8	20-100	600 K.C. B.C. OSC. PAD
9	2054	POL. ANT TRIMMER
10	1123	1st I.F.
11	1124	2nd I.F.
12	80-104	POWER TRANSFMR.
13		SPEAKER

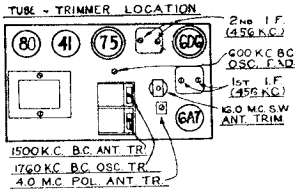

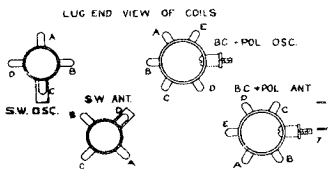

1937

BOTH CHASSIS HAVE CONVENTIONAL ALIGNMENT. SEE SPECIAL SECTION OF VOLUME VIII

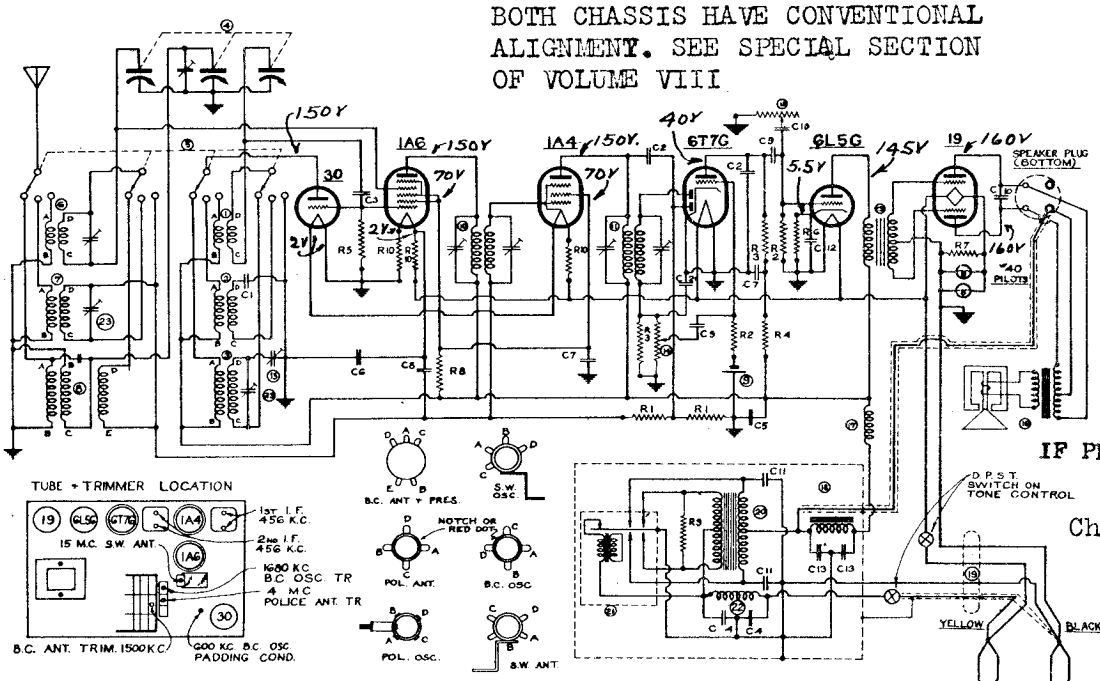

IF PEAK 456 KC

Chassis 651

	PART NO.	DESCRIPTION
C1	1500C	.001 MFD. MICA 5%
C2	1504	.00025 " "
C3	1510	.000025 " "
C4	1635	.8 " " 150v
C5	1618	.25 " " 400v
C6	1614	.25 " " 200v
C7	1601	.1 " " 400v
C8	1600	.1 " " 200v
C9	1603	.01 " " 400v
C10	1611	.006 " " 600v
C11	1604	.01 " " 600v
C12	18-100	10 M.F.D. 25v. ELECTROLYTIC
C13	1645	8 " " 150v "

	PART NO.	DESCRIPTION
R1	6017	1 MEG OHM 1/3 W.
R2	6018	.5 " " "
R3	6024	.25 " " "
R4	6028	100,000 " "
R5	6025	50,000 " "
R6	6006	1500 " "
R7	6007	800 " "
R8	6117	25,000 " 1/2 W.
R9	6101	100 " "
R10	60-108	33 1/3 " WIRE WOUND

	PART NO.	DESCRIPTION
1	10-133	S.W. OSC. COIL
2	10-138	POLICE OSC. COIL
3	10-134	B.C. OSC. COIL
4	19-106	3 GANG CONDENSER
5	69-103	WAVE SWITCH
6	10-132	S.W. ANT. COIL
7	10-135	POLICE ANT. COIL
8	10-137	B.C. ANT. & PRESEL. C'L
9	4600	BIAS CELL
10	1133	1ST. I.F. TRANSFORMER
11	1134	2ND. I.F. TRANSFORMER
12	26-106	TONE CONTROL
13	6010	PUSH-PULL AUDIO TRANS.

	PART NO.	DESCRIPTION
14	24-101	VOLUME CONTROL
15	20-100	B.C. OSC. PADDER
16		SPEAKER
17	3303	R.F. "B" CHOKE
18	3307	FILTER
19	23-103	BATTERY CABLE
20	8041	POWER TRANFORMER
21	3407	VIBRATOR
22	3313	R.F. "A" CHOKE
23	26-102	TRIMMER STRIP

©John F. Rider, Publisher

SPIEGEL, INC.

MODELS 6510,6514,6520
Chassis B 1
Schematic,Socket
Trimmers,Alignment

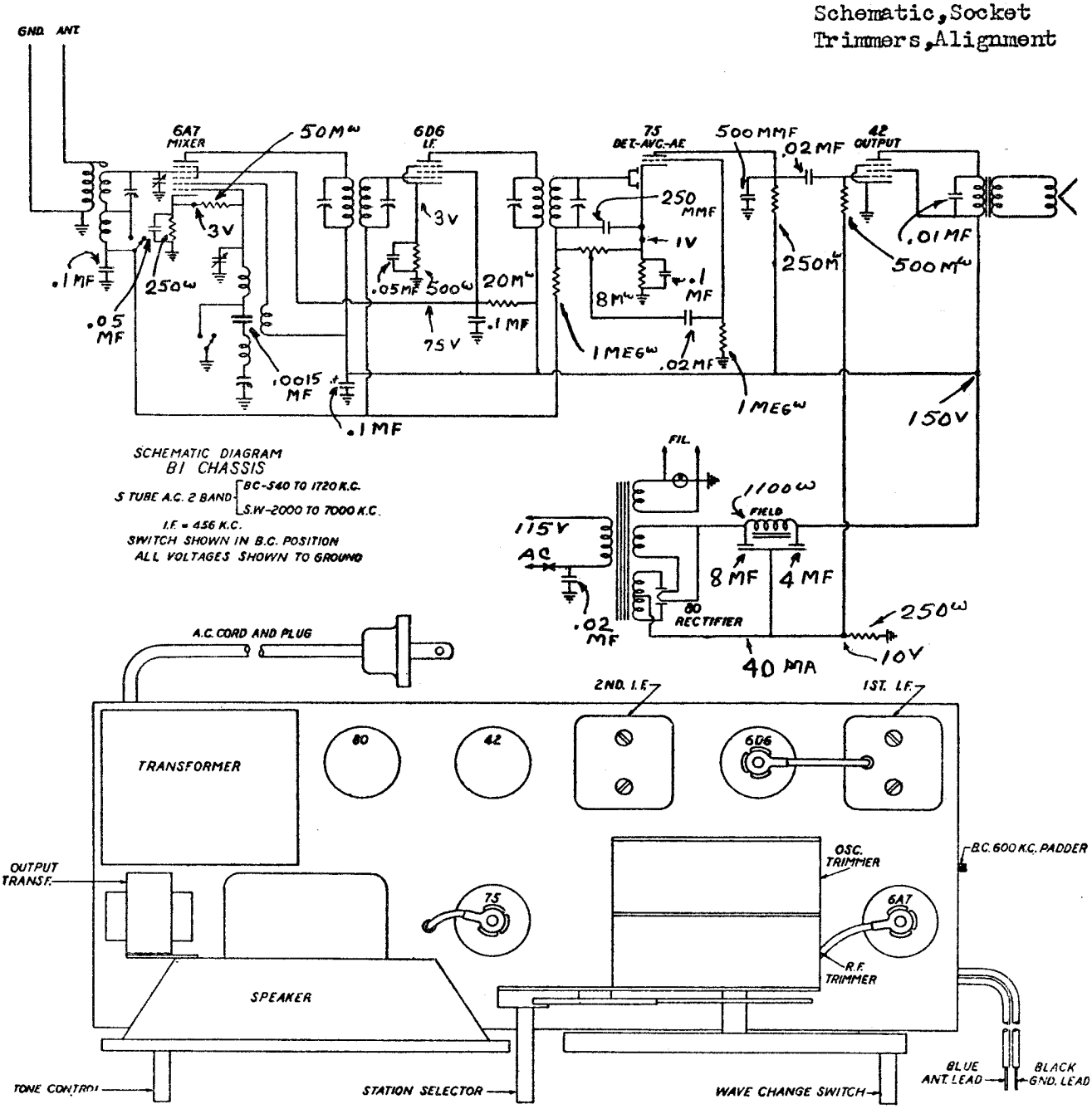

ALIGNMENT

INTERMEDIATE FREQUENCY - Connect the Signal Generator to grid of 6A7 tube through a .05 MFD condenser. Ground Generator to Ground of chassis. Set Generator at 456 KC and adjust trimmers on IF transformers for Max. Peak.
BROADCAST BAND - Connect the Generator to the antenna of receiver through a 1000MMFD condenser. Ground Generator to ground of chassis. Range switch in Broadcast position. Set Generator to 1400 KC and adjust Oscillator and RF trimmers to maximum peak. Dial of receiver set on 1400 KC. Pad the Broadcast band at 600 KC, rocking gang condenser during the adjustment.
SHORT WAVE BAND - Set Receiver and Generator to 6000 KC. Range switch in SW position. Adjust SW antenna trimmer for maximum peak. No padding adjustment is required on this band.

©John F. Rider, Publisher

MODEL 6600
Chassis 1060 B
Schematic, Voltage

SPIEGEL, INC.

Alignment, Parts
Socket

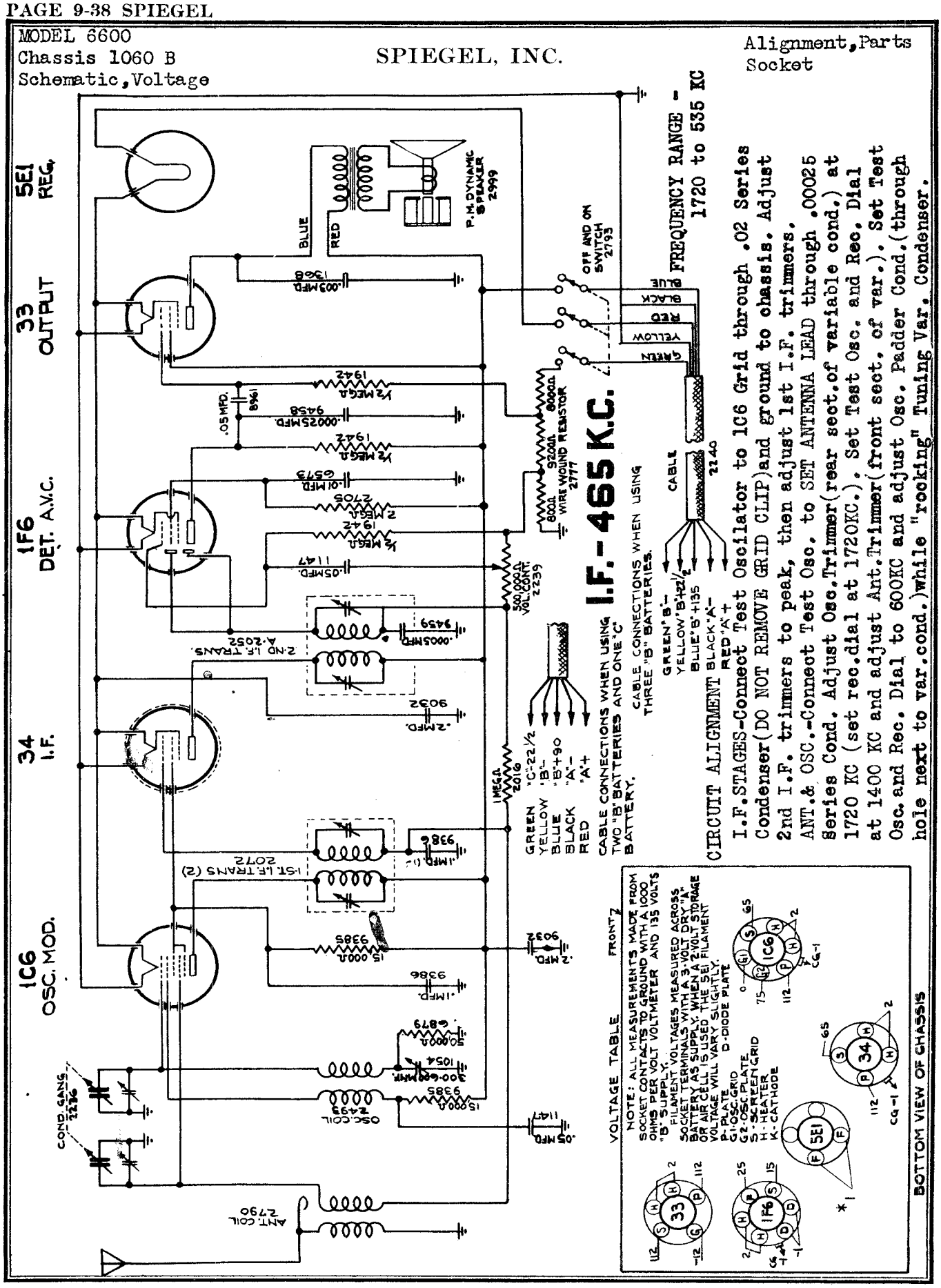

©John F. Rider, Publisher

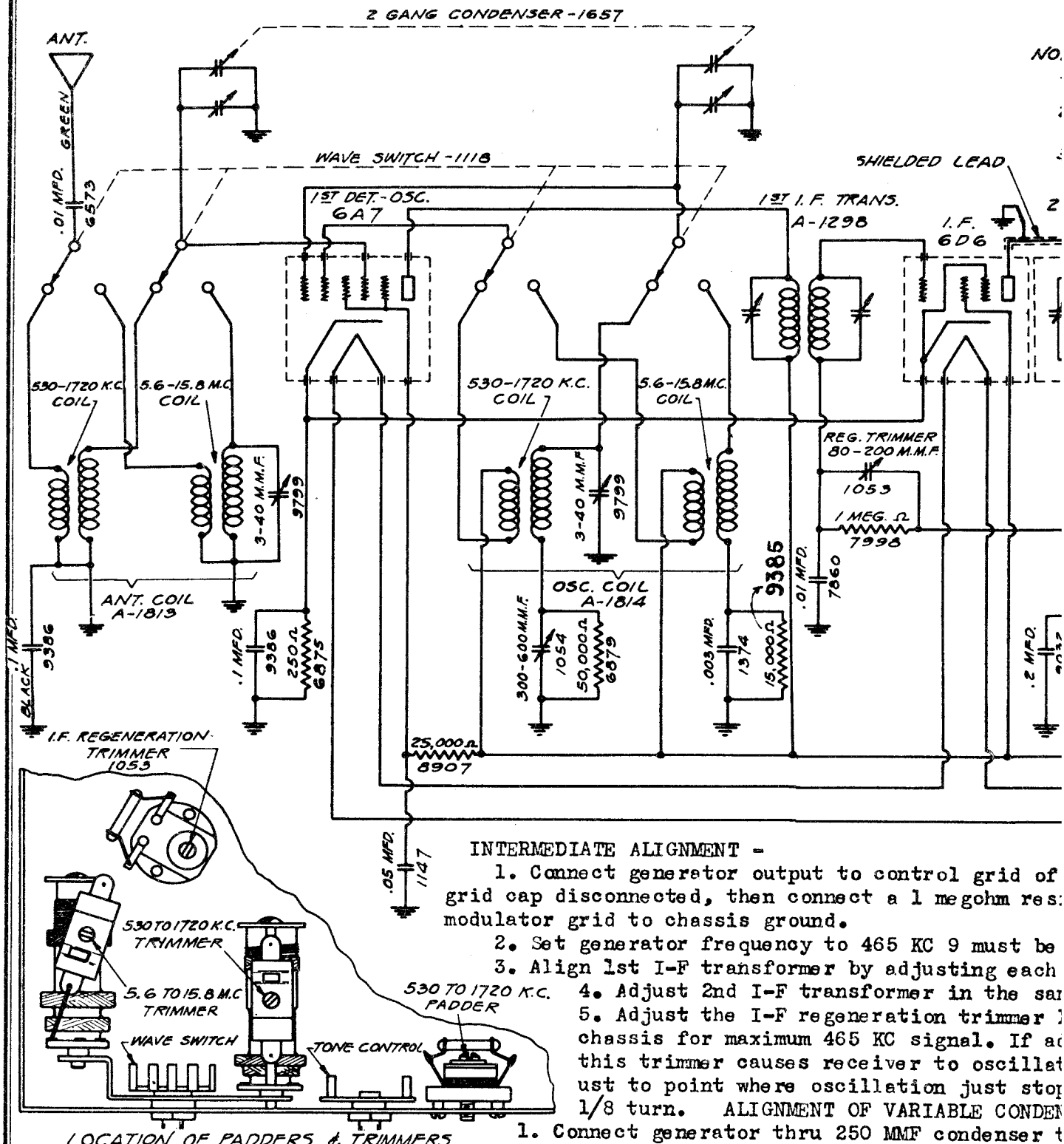

LOCATION OF PADDERS & TRIMMERS IN LEFT HAND (FRONT) BOTTOM OF CHASSIS

INTERMEDIATE ALIGNMENT -

1. Connect generator output to control grid of grid cap disconnected, then connect a 1 megohm res: modulator grid to chassis ground.

2. Set generator frequency to 465 KC 9 must be

3. Align 1st I-F transformer by adjusting each

4. Adjust 2nd I-F transformer in the sa

5. Adjust the I-F regeneration trimmer chassis for maximum 465 KC signal. If a this trimmer causes receiver to oscillat ust to point where oscillation just sto 1/8 turn. ALIGNMENT OF VARIABLE CONDE

1. Connect generator thru 250 MMF condenser t lead and the ground to chassis.

2. Place band selector SW. on 15.8 to 5.6 MC receiver to exactly 14 MC. Then bring receiver to maximum output by adjusting trimmer located on top of gang condenser (OSC section). When adjusting this trimmer, two peak mental and image peak will be noticed. Care must be taken that the fundamental is used ustment. Back trimmer to minimum capacity, next screw down until 1st peak (fundamental When fundamental peak is obtained adjust trimmer to maximum output at 14 MC.

©John F. Rider, Publisher

, INC.

1934

Trimmers, Alignment Parts

Chassis 6946
Schematic, Voltage

re:
1. ALL NOS. SHOWN RELATIVE TO PARTS ARE OUR PART NUMBERS.
2. NUMBERS SHOWN WITH A PREFIX "A" ARE COMPLETE ASSEMBLIES.
3. I. F. = 465 K.C.

FREQUENCY RANGE -
1720 to 530 KC
5.6 to 15.8 MC

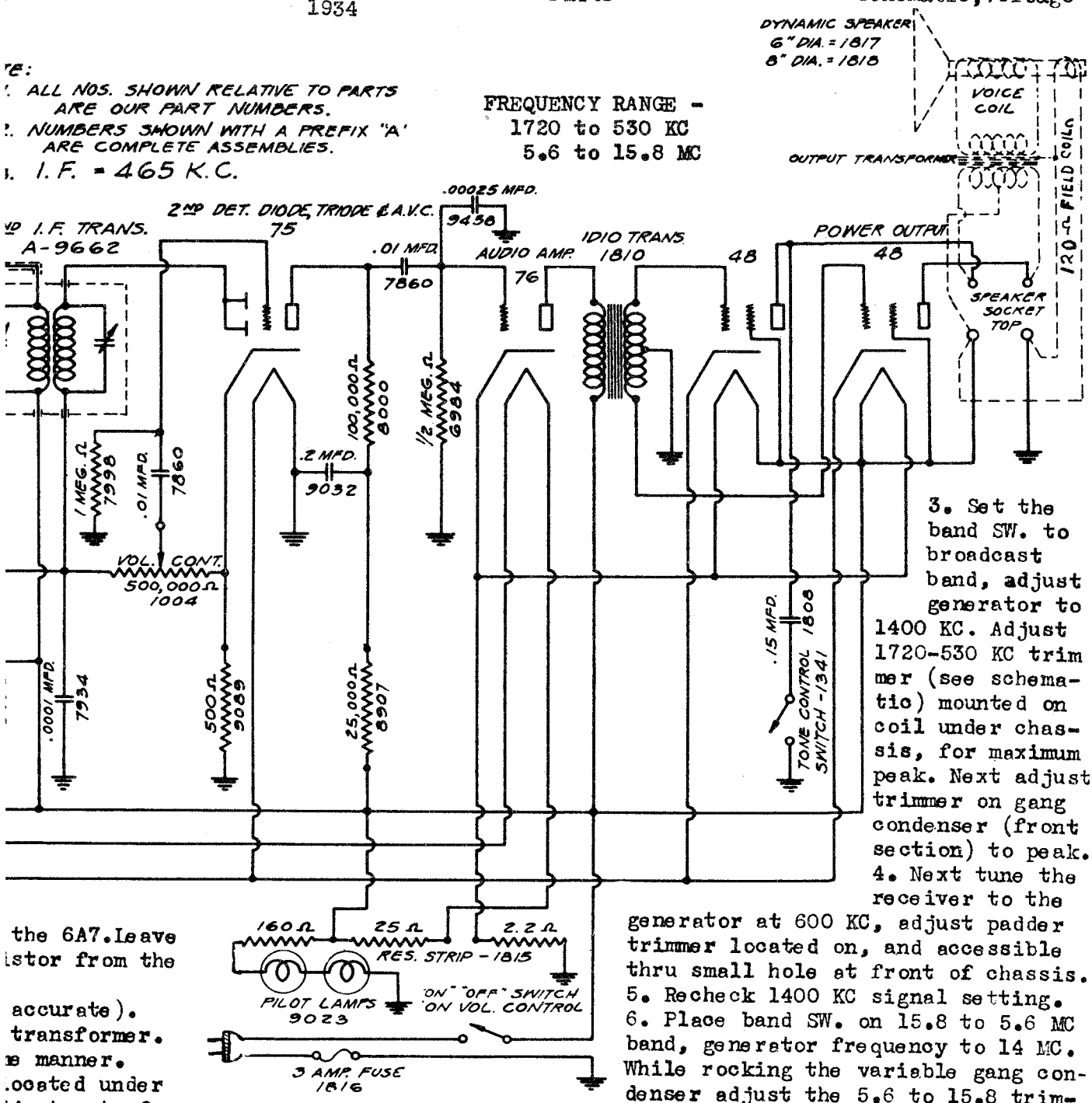

the 6A7. Leave
istor from the

accurate).
transformer.
e manner.
located under
ljustment of
e, always adj-
s, then back
SER
o set antenna

band, tune the
condenser
s, the funda-
for the adj-
) is obtained.

CONVENTIONAL ALIGNMENT
(see special section)

3. Set the band SW. to broadcast band, adjust generator to 1400 KC. Adjust 1720-530 KC trimmer (see schematic) mounted on coil under chassis, for maximum peak. Next adjust trimmer on gang condenser (front section) to peak.
4. Next tune the receiver to the generator at 600 KC, adjust padder trimmer located on, and accessible thru small hole at front of chassis.
5. Recheck 1400 KC signal setting.
6. Place band SW. on 15.8 to 5.6 MC band, generator frequency to 14 MC. While rocking the variable gang condenser adjust the 5.6 to 15.8 trimmer, mounted one one of the coils underneath the chassis.

VOLTAGE TABLE

Battery Voltage - 32 Volts
Wave Band - Broadcast

TUBE		FILAMENT	PLATE	SCREEN	CATHODE	GRID NO.2	GRID NO. 3 & 5
6A7	1st Detector & Oscillator	6	32		.5	32	15
6D6	I. F. Amplifier	6	32	32	.6		
75	2nd Detector & A.V.C	6	5*				
76	1st Audio	6	30				
48	Output	6	30	32	5		
48	Output	6	30	32	5		

Triode plate comparative voltage only
Read all voltages from socket to chassis

Schematic, Socket, Trimmers
Alignment

SPIEGEL, INC.

MODELS 6525, 6532, 6540
6560
Chassis 14-136EA, 14-152ES

I. F. Alignment

The I.F. frequency of this receiver is 456 K.C. For realignment, use the following procedure.

It is necessary to use an accurately calibrated signal generator. Couple the signal generator to the grid of the 6A7 tube with a tenth microfarad condenser in series with the "high" lead of the signal generator. Connect the ground side of the signal generator to the chassis. Set the signal generator to 456 K.C. Be sure the wave switch of the set is in the broadcast position and the volume control set at maximum. Attenuate the signal generator so that the signal is just audible in the speaker. If an output meter is used, it should be connected across the voice coil terminals of the speaker. Use ½ volt as standard output.

Adjust the 2nd I.F. transformer first. Each screw should be adjusted for maximum output. After number two I.F. has been adjusted, number one I.F. should be adjusted for maximum output. After both transformers have been adjusted, it is necessary to recheck No. 2 transformer and then recheck No. 1.

See TUBE LAYOUT for location of I.F. and R.F. trimmers and padder.

R. F. Alignment

To align the broadcast band, proceed as follows: First, connect the ground side of the signal generator to the chassis. Connect the high side of the signal generator with a .00025 condenser, in series, to the antenna lead of the set. Make sure the band switch of the set is in the broadcast position. Set the volume control to maximum. Turn the station selector to the highest frequency (as far as it will go). Set the signal generator to 1720 K.C. Adjust the oscillator trimmer until the signal is heard. After the oscillator has been set at 1720 K.C., turn the station selector to 1400 K.C. Set the signal generator to 1400 K.C. When the signal is heard, adjust the first detector trimmer for maximum output.

When the set has been adjusted at 1400 K.C., turn the station selector dial to 600 K.C. Set the signal generator to 600 K.C. When the signal is heard, adjust the padder condenser by rocking the selector back and forth. While adjusting the padder screw, it is necessary to move the selector so that the signal may be kept in tune while adjusting the padder screw. This procedure should be followed until maximum output is obtained.

The foregoing procedure should be repeated. That is, the set is to be rechecked at 1720, 1400 and 600 K.C.

When aligning the R.F., use the same output standard as was used on the I.F. alignment.

Short Wave Alignment

Turn the band selector switch of the set to short wave. Set the signal generator to 6000 K.C. Connect a 400 ohm resistor in series with the .00025 condenser. Tune the set until the signal is heard. If two signals are heard, always align to the highest frequency heard on the receiver. Adjust the small trimmer on the antenna coil for maximum output.

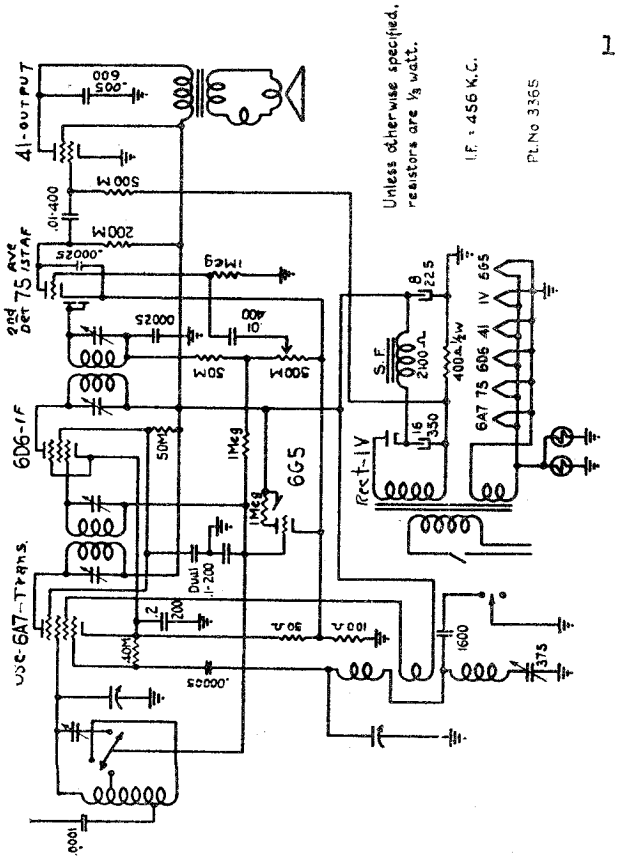

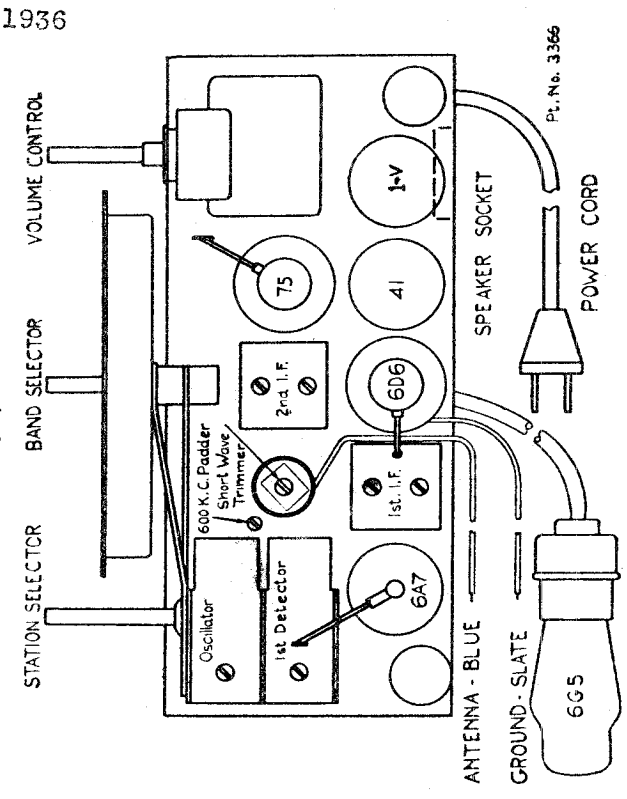

MODELS 9902, 9908
Chassis 5700B

SPIEGEL, INC.

1935

Schematic, Socket Voltage, Alignment

Line : 115 Volume : Full on

TUBE		FIL.	PLATE	SCREEN	CATHODE	GRID NO.1	GRID NO.2	GRID 3 & 5
58	I. F. Amplifier	2.45	205	80	2			
	Oscillator & 1st Detector	2.45	205		2.5	1.5	160	80
	2nd Detector Diode AVC & Triode	2.45	100*		1			
2A5	Output	2.45	190	205	.8**			
80	Rectifier	4.85						

*Triode Plate
**From Grid To Chassis

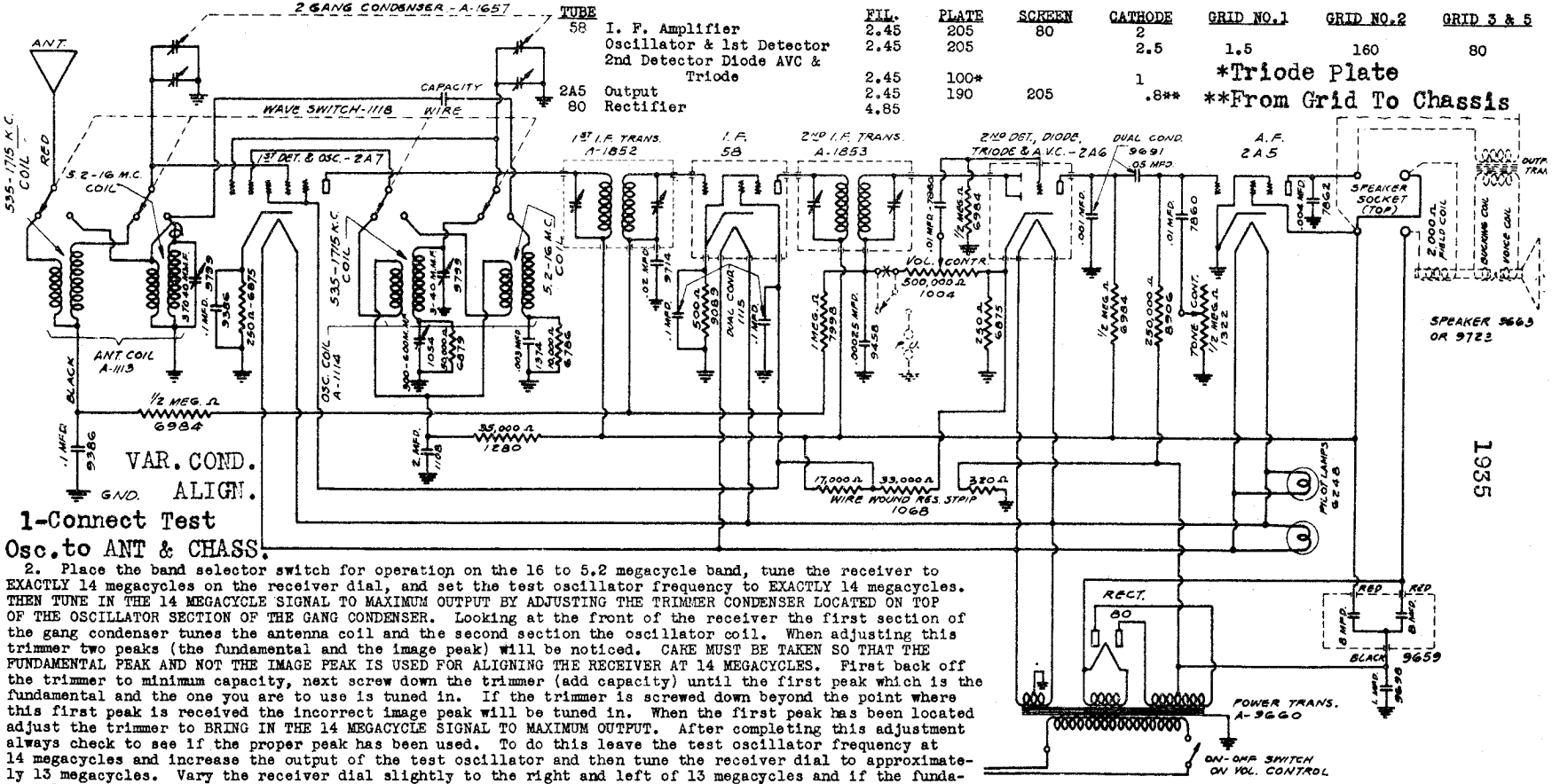

VAR. COND. ALIGN.

1-Connect Test Osc. to ANT & CHASS.

2. Place the band selector switch for operation on the 16 to 5.2 megacycle band, tune the receiver to EXACTLY 14 megacycles on the receiver dial, and set the test oscillator frequency to EXACTLY 14 megacycles. THEN TUNE IN THE 14 MEGACYCLE SIGNAL TO MAXIMUM OUTPUT BY ADJUSTING THE TRIMMER CONDENSER LOCATED ON TOP OF THE OSCILLATOR SECTION OF THE GANG CONDENSER. Looking at the front of the receiver the first section of the gang condenser tunes the antenna coil and the second section the oscillator coil. When adjusting this trimmer two peaks (the fundamental and the image peak) will be noticed. CAKE MUST BE TAKEN SO THAT THE FUNDAMENTAL PEAK AND NOT THE IMAGE PEAK IS USED FOR ALIGNING THE RECEIVER AT 14 MEGACYCLES. First back off the trimmer to minimum capacity, next screw down the trimmer (add capacity) until the first peak which is the fundamental and the one you are to use is tuned in. If the trimmer is screwed down beyond the point where this first peak is received the incorrect image peak will be tuned in. When the first peak has been located adjust the trimmer to BRING IN THE 14 MEGACYCLE SIGNAL TO MAXIMUM OUTPUT. After completing this adjustment always check to see if the proper peak has been used. To do this leave the test oscillator frequency at 14 megacycles and increase the output of the test oscillator and then tune the receiver dial to approximately 13 megacycles. Vary the receiver dial slightly to the right and left of 13 megacycles and if the fundamental peak was used in aligning at 14 megacycles the test oscillator signal will be heard at approximately 13 megacycles on the set dial. If it is not possible to receive the signal then the fundamental peak was not used and the 14 megacycle adjustment of the trimmer must be gone over and properly adjusted.

3. Place the band selector switch for operation on the 1715 to 535 kilocycle band, set the oscillator to EXACTLY 1400 kilocycles and tune the receiver dial to EXACTLY 1400 kilocycles. BRING IN THIS 1400 KILOCYCLE SIGNAL TO MAXIMUM OUTPUT BY ADJUSTING THE SMALL TRIMMER CONDENSER which is located underneath near the center and towards the front of the chassis.

4. Next adjust the trimmer condenser on top of the antenna section of the gang condenser (front section) for maximum 1400 kilocycle signal output.

5. Leave the band selector switch for operation on the 1715 to 535 kilocycle band, set the test oscillator frequency to approximately 600 kilocycles, and adjust the receiver dial to approximately 600 kilocycles. Then while rocking the variable condenser slightly to the right and left adjust the 600 kilocycle padding condenser, which is located below the speaker and accessible through the hole in the front of the chassis for maximum output.

6. Recheck the 1400 kilocycle adjustment.

7. Place the band selector switch for operation on the 16 to 5.2 megacycle band, tune the receiver dial and set the oscillator frequency to EXACTLY 14 megacycles. Then adjust the trimmer condenser, which is located underneath and near the center of the right hand side of the chassis for maximum 14 megacycle signal output.

IF. PEAK 465 KC.

I.F. ALIGNMENT

Connect Test Oscillator to 2A7 Cont. Grid and ground to chass. Leave grid clip lead off and connect a 1-Meg Resistor from 2A7 Cont. Grid to chassis. Adjust 1st I.F. Transf. and then the 2nd I.F. Turn NUT adj. to MAX. before turning the SCREW adj. to MAX.

©John F. Rider, Publisher

SPIEGEL, INC.

MODELS 9904, 9910, 9926
9928
Chassis 27D
Schematic, Socket
Trimmers, Alignment

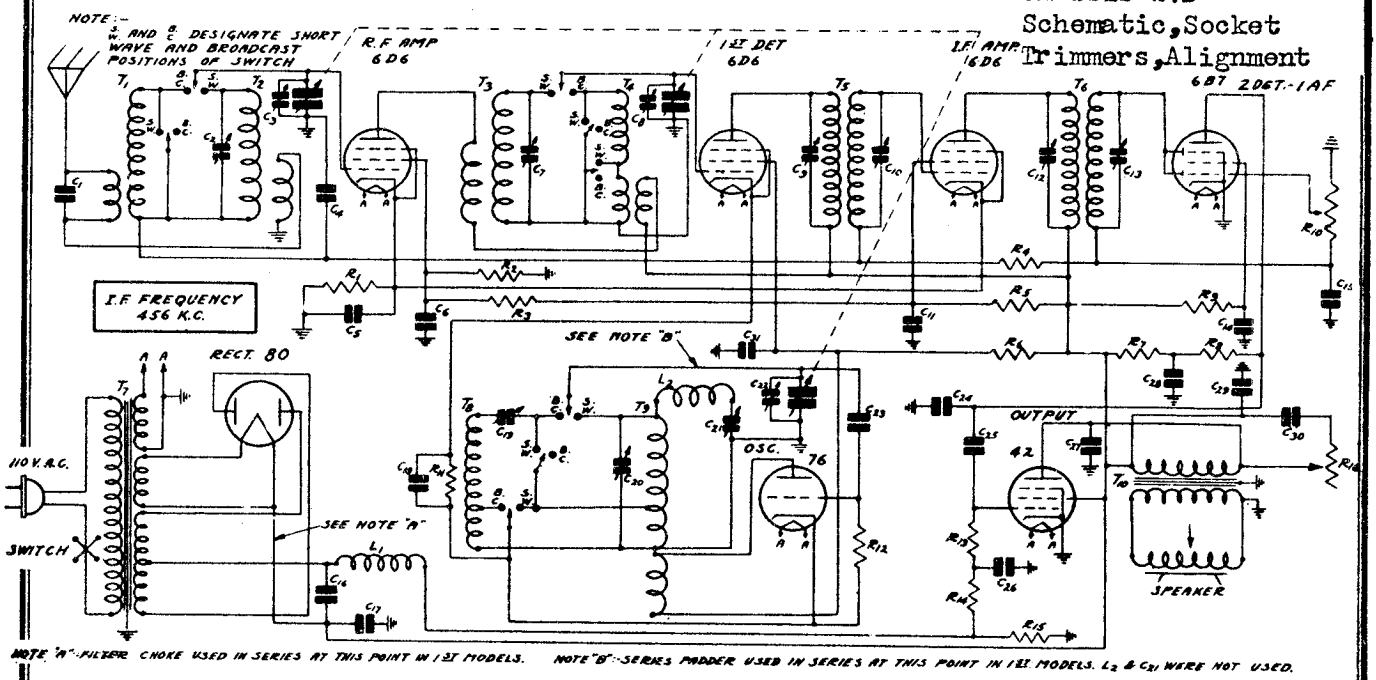

1934

Fig. 1—Schematic Circuit Diagram

Condenser Alignment

Correct alignment is extremely important in connection with all wave receivers. The receivers are all properly aligned at the factory with precision instruments and realignment should not be attempted unless all other possible causes of the faulty operation have first been investigated and unless the service technician has the proper equipment. A signal generator that will provide an accurately calibrated signal of 456 K. C. and accurately calibrated signals over the broadcast and short wave bands, 530-1740 K. C. and 5.8-18.3 M. C., is required. An output indicating meter is also necessary. It will be practically impossible to align the receiver if unsatisfactory apparatus is used.

Use a non-metallic screw driver for the adjustments. The complete procedure is as follows:

Intermediate Frequency Adjustment

Set the signal generator for 456 K. C. Connect the antenna lead of the signal generator to the grid of the 1st detector through a .05 mfd. condenser. Turn the tuning condenser rotor until the plates are completely out. The ground lead from the signal generator goes to the ground lead of the receiver. The volume control should be at the maximum position. Attenuate the signal so that A. V. C. action is not obtained.

Then adjust the four I. F. trimmer condensers until maximum output is obtained. The adjusting screws for these condensers are reached from the top of the chassis and are in the round I. F. cans—See Fig. 2. The openings to the trimmer condensers are covered over by a small cover plate which is held in position by a screw. Loosen these screws until the cover plates can be swung around.

Broadcast Band Adjustment

The broadcast short wave switch should be in the broadcast position. Set the signal generator for 1740 K. C. Turn the rotor to the full open position. The antenna lead from the signal generator is in this instance connected to the antenna lead of the receiver. Attenuate the signal so that A. V. C. action is not obtained. Adjust the oscillator broadcast trimmer until maximum output is obtained. This trimmer is on the tuning condenser and its location is shown in Fig. 2.

Then set the signal generator for 1500 K. C. Turn the rotor until maximum output is obtained. Loosen the pointer screw and set the pointer at the 1500 K. C. mark on broadcast band scale. Retighten pointer screw. Then adjust the antenna and 1st detector broadcast trimmers until maximum output is obtained.

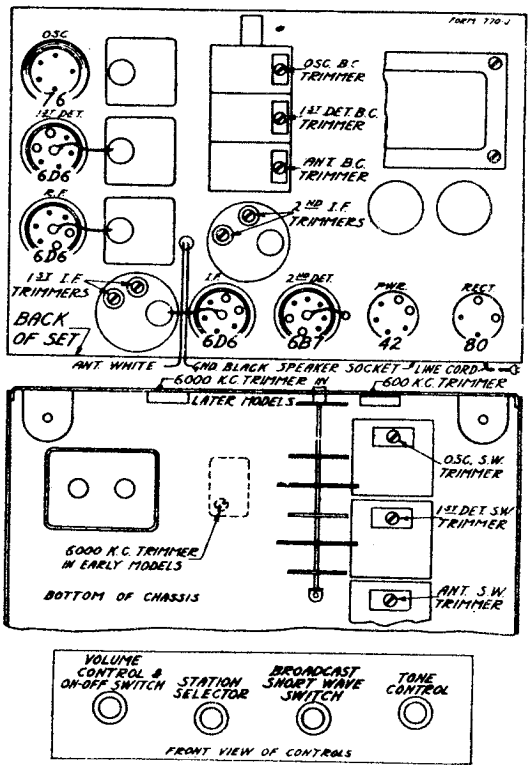

Fig. 2—Tube Arrangement and Location of Trimmers

Next set the signal generator for 600 K. C. and adjust the 600 K. C. trimmer. The adjusting screw is reached through a hole in the front panel of the chassis as shown in Fig. 2. Turn the tuning condenser rotor until maximum output is obtained. Then turn the rotor slowly back and forth over

©John F. Rider, Publisher

©John F. Rider, Publisher

this setting at the same time adjusting the 600 K. C. trimmer screw until the highest output is obtained.

Short Wave Band Adjustment

CAUTION—After the broadcast band alignment as described above has been made, do not change the adjustment of any of the broadcast band trimmers.

Turn the broadcast short wave switch to the short wave position. Turn the rotor to the full open position. As explained above, the volume control should be at the maximum position and the signal should be attenuated to prevent A. V. C. action. Set the signal generator for 18,300 K. C. Then adjust the oscillator short wave trimmer for maximum output. This trimmer is reached from under the chassis and its position is shown in Fig. 2.

Next set the signal generator for 15,000 K. C. Turn the rotor until the dial pointer is at the 15,000 K. C. mark on the short wave portion of the dial scale. Then adjust the antenna and 1st detector short wave trimmers until maximum output is obtained.

In aligning the short wave band of the receiver, it will be noted that the signal will be heard with the signal generator set at two points 912 K. C. apart. That is, if the receiver is tuned to 15,000 K. C. a signal will be heard when the signal generator is set at 15,000 K. C. and again at approximately 15,912 K. C. This is due to image reception or the fact that a 456 K. C. beat is obtained when the signal is 456 K. C. lower than the receiver oscillator and also when the signal is 456 K. C. higher than the receiver oscillator. Care should be taken to see that the receiver is tracked with the signal generator adjusted to the lower of the two frequencies at which a signal is heard, in order that the oscillator in the receiver will be 456 K.C. higher in frequency than the signal.

Next set the signal generator for 6000 K. C. and adjust the 6000 K. C. trimmer. In the first models of this receiver, this condenser was located at the point shown in Fig. 2 in dashed lines. In the later models it is reached through a hole in the front panel of the chassis as shown in the same illustration. Turn the tuning condenser rotor until maximum output is obtained. Then turn the rotor slowly back and forth over this setting, at the same time adjusting the 6000 K. C. trimmer screw until the highest output is obtained. In the early models this adjustment is broad while in the later models it is more critical.

Caution

The can of electrolytic condenser C16 is not at ground potential. Therefore in any work on the chassis, care should be taken not to touch this can and any other grounded point such as the other electrolytic condenser can.

Replacing Drive Cord

Remove chassis from cabinet.

Take off the pilot light assembly by lifting off the two sockets and spring clips.

Detach the large pointer by removing the screw at the center of the dial.

Loosen the dial assembly by taking out the two screws which secure the bottom of this assembly to the chassis.

Then lay the complete dial assembly face downward in front of the chassis. It is not necessary to remove the volume control and tone control collars which hold the indicator cords of these two controls in position.

Turn the drive drum until the opening in this drum is approximately vertical and with the hole at the top as shown in Fig. 3.

Remove the tension spring and the old drive cord.

See that the eyelet is in the hole in the drive drum as shown in Fig. 3. Insert one end of the drive cord from the outside through the hole in the eyelet in the drive drum.

Voltages at Sockets
LINE VOLTAGE — 115
ANTENNA SHORTED TO GROUND

Type of Tube	Function	Across Fila. or Heater	Plate to Cath.	Screen to Cath.	Control Grid to Cath.	Normal Plate M. A.
6D6	R. F.	6.3	246	100	3.6(1)	5.3
6D6	1st Det.	6.3	237	97	8.0(2)	3.4
76	Osc.	6.3	115		0	4.8
6D6	I. F.	6.3	246	130	3.6(1)	8.3
6B7	2nd Det.	6.3	50(3)	40(3)	0	2.7
42	Power	6.3	230	245	17.0(4)	33.0
80	Rectifier	5.0				37.0 per plate

(1) Cathode to ground
(2) Subject to variation
(3) Read with 1,000,000 ohm meter
(4) As read across R15

Tie the end of the cord which has been inserted in the hole to one end of the tension spring.

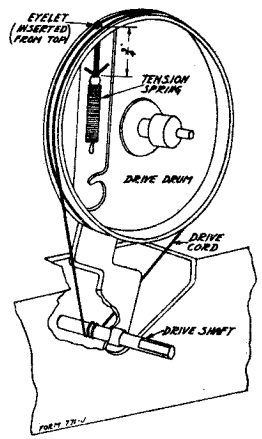

Fig. 3—Drive Cord Replacement

Wrap the cord in a clockwise direction (facing front of chassis) around the drive drum approximately one-half turn.

Then tilt the chassis up on its back panel and bring the cord mentioned in the previous paragraph down to the drive shaft. Wrap it two and one-half times around the drive shaft as shown in Fig. 3.

Then bring this cord up from the drive shaft and wrap it around the drive drum approximately one and one fifth turns in a clockwise direction until it is up to the hole in this drum as illustrated.

Insert the free end of the cord through the hole in the eyelet and tie it to the end of the tension spring. The end of the spring, when hanging free, should be approximately ¼" from the flange of the drum as shown in Fig. 3. Cut off the surplus length of cord after it is knotted.

Then secure the other end of the tension spring over the spur on the drive drum.

Replace the dial assembly and pointer.

Replace the pilot light assembly after which the chassis may be reinstalled in the cabinet.

Changes in Early Models

There are two points at which the early models of this receiver differ from the present models. These points are indicated in Fig. 1 and described below.

Power Unit

In the early models a separate filter choke was used in series at the point indicated in note A in Fig. 1. The values of the two filter condensers C16 and C17 were less than as used at present. The values of the old and new condensers are shown in the parts list. A different power transformer was also used with the early filter system and this is likewise shown in the parts list.

The two power transformers are not interchangeable and care must be taken in ordering for replacement purposes to order the correct one. The original chassis can be identified by the separate filter choke.

Short Wave Oscillator

Referring to Fig. 1 it will be noted that there is a tracking coil L2 and a trimmer condenser C21 connected in series between the short wave oscillator coil and ground. In the first models of this receiver these two units, which are required for tracking the short wave oscillator, are not used. Instead a series padding condenser was used at the point in the circuit indicated by note B in Fig. 1.

At the time this change was made a change was also made in the oscillator assembly and care must be taken in ordering for replacement purposes to order the correct one. Early models with the original oscillator assembly have no spot of paint or a green spot of paint on the 80 socket rivet. Later models with the new oscillator assembly and new tracking system have a red spot of paint on the 80 socket rivet.

Twenty-five Cycle Receivers

The twenty-five cycle receiver differs from the sixty-cycle, receiver, only in the fact that a different power transformer is used. The correct power transformer is shown in the parts list.

The twenty-five cycle chassis can be operated satisfactorily from a sixty-cycle power supply. However, the reverse is not true, the sixty-cycle receiver cannot be operated from a twenty-five cycle power supply.

A 110-220 Volt, 40-60 cycle Power Transformer is also available for this model.

REPAIR PARTS LIST FOR 7 TUBE BROADCAST AND SHORT WAVE RECEIVER

When ordering parts be sure and give the part number. Also give the series number which will be found in the License Notice label. If there is a spot of paint on the chassis, give this color.

Part No.	Item	List Price
P-1441	Double Mounting Strip	.10
P-1421	Single Mounting Strip	.10
P-2060	Knob Small	.20
P-2062	Knob Large	.20
P-10337	Small Tone & Volume Control Disc	.10
P-20912	Pointer, Large	.20
P-2012	Pilot Light Bulb 6-8 volt	.15
P-10272	Rubber Mounting Feet	.10
P-10820	Glass Crystal	.15
P-20675	Crystal Retainer Ring	.10
P-2090	6" Speaker Mantel Sets L1 - 1250 ohm	6.00
P-2091	8" Speaker Console Sets L1 - 1250 ohm	6.75
	8" Black Drive Cord (V. C. or T. C. Ind.)	.05
	29" Black Drive Cord (Cond. Drive)	.10
P-2136	Pilot Lamp Socket & Clip Assembly	.10
P-2101	Broadcast-Short Wave Switch	1.88
P-1885	No. 6D6 Socket	$ .15
P-2022	No. 76 Socket	.15
P-1944	No. 6B7 Socket	.15
P-1884	No. 42 Socket	.15
P-2025	No. 80 Socket	.15
P-1637	Speaker Socket	.10
P-40445	Tube Shield for 6D6 & 6B7 Tubes	.15
P-40444	Tube Shield for 76 Tube	.15
P-40443	Tube Shield Bases	.10
*P-50634	Power Transformer 115 Volts, 60 Cycles	3.00
*P-50635	Power Transformer 115 Volts, 25 Cycles	4.50
*P-50636	Power Transformer 115-230 Volts, 40-60 Cycles	3.25
†P-50646	Power Transformer 115 Volts, 60 Cycles	3.25
†P-50647	Power Transformer 115 Volts, 25 Cycles	4.50
†P-50648	Power Transformer 115-230 Volts, 40-60 Cycles	3.75
*P-50637	Filter Reactor	.85
P-50599 A	Output Transformer T 10	1.15
P-5176	Antenna R.F. Trans. less can T1 & T2	1.80
P-5177	Inter-Stage R. F. Trans. less can T3 & T4	1.75
*P-5178	Oscillator Coil Assembly Less can T8 & T9	1.70
†P-5183	Oscillator Coil Assembly Less can T9 & T9	1.70
P-40433	Cans for the above Assemblies	.15
†P-5190	High Frequency Oscillator Tracking Coil L2	.35
P-5179	1st I. F. Assembly Complete with Can T5	2.15
P-5180	2nd I. F. Assembly Complete with Can T6	1.75
P-30342-A	Grid Cap Only	.10
P-76702	AC Cord & Plug	.70
P-1504	8 Terminal Mounting Strip	.10

Part No.	Code	Resistance	Watts	Type	List Price
P-98016	R1	200 ohm	.2	Flex. Wire Wound	$ .15
P-B93303	R2	30,000 ohm	.5	Carbon	.20
P-B94602	R3	6,000 ohm	.5	Carbon	.15
P-A95205	R4	2.0 megohm	.2	Carbon	.15
P-98020	R5 16,000 ohm / R6 25,000 ohm		1.5 / 1.0	Armored wire wound	.65
P-A94203	R7	20,000 ohm	.2	Carbon	.15
P-B94603	R8	60,000 ohm	.5	Carbon	.15
P-B94254	R9	250,000 ohm	.5	Carbon	.15
P-96014	R10	500,000 ohm		Vol. Control & Switch	1.05
P-A94252	R11	2,500 ohm	.2	Carbon	.15
P-A94104	R12	100,000 ohm	.2	Carbon	.15
P-A95504	R13	500,000 ohm	.2	Carbon	.20
P-A94104	R14	100,000 ohm	.2	Carbon	.15
P-98015	R15	235 ohm	2.0	Flex. Wire Wound	.15
P-97011	R16	150,000 ohm		Tone Control	.75

Part No.	Code	Capacity	Volts	Type	List Price
P-80919	C1	.00025 mfd.		Moulded	$ .20
P-2102	C2	3-40 mmfd.		Ant. S.W. Trimmer	.15
	C3	(See 3 Gang Cond.)		Gang Trimmer	
P-80862	C4	.05 mfd.	200V.	Tubular	.15
P-80888	C5	.25 mfd.	200V.	Tubular	.25
P-80890	C6	.05 mfd.	400V.	Tubular	.20
P-2102	C7	3-40 mmfd.		1st Det.S.W. Trim.	.15
	C8	(See 3 Gang Cond.)		Gang Trimmer	
P-1386-B	C9 90±30 mmfd. / C10 90±30 mmfd.			Dual Trimmer Part of I. F. Assem.	
P-81034	C11	.25 mfd.	300V.	Tubular	.30
P-1386-B	C12 90±30 mmfd. / C13 90±30 mmfd.			Dual Trimmer Part of I. F. Assem.	
P-81040	C14	.25 mfd.	400V.	Tubular	.35
P-80977	C15	.0001 mfd.		Moulded	.20
†P-81043	C16	18.0 mfd.	300V.	Electrolytic Wet	1.30
*P-80916	C16	8.0 mfd.	450V.	Electrolytic Wet	1.25
*P-81032	C17	8.0 mfd.	300V.	Electrolytic Wet	1.30
†P-81042	C17	14.0 mfd.	400V.	Electrolytic Wet	1.45
P-80862	C18	.05 mfd.	200V.	Tubular	.15
P-2112	C19	300-500 mmfd.		600 K.C. Trimmer	.45
P-2102	C20	3-40 mmfd.		Osc. S.W. Trimmer	.15
†P-1685	C21	70±30 mmfd.		6000 K.C. Trimmer	.35
	C22	(See 3 Gang Cond.)		Gang Trimmer	
P-81005	C23	.000035 mfd.		Moulded	.15
P-80914	C24	.002 mfd.	600V.	Tubular	.20
P-80981	C25	.01 mfd.	400V.	Tubular	.20
P-81044	C26	.03 mfd.	400V.	Tubular	.15
P-80914	C27	.002 mfd.	600V.	Tubular	.20
P-81033	C28	.25 mfd.	400V.	Tubular	.35
P-80887	C29	.1 mfd.	400V.	Tubular	.20
P-80890	C30	.05 mfd.	400V.	Tubular	.20
P-80887	C31	.1 mfd.	400V.	Tubular	.20
P-81027-B	3 Gang Condenser				3.35
*P-2113		600-1200 mmfd.		6000 K.C. Trimmer	.61

* Used in early Models. See Article on changes in this Manual
† Used in Later Models. See Article on changes in this Manual

PRICES ARE SUBJECT TO CHANGE WITHOUT NOTICE

Schematic, Socket Trimmers, Parts

SPIEGEL, INC.

MODELS 9916, 9917
Chassis 29B

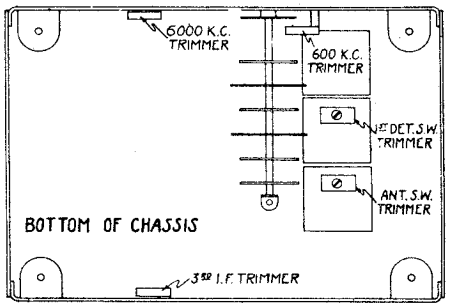

Fig. 3—Trimmer Locations

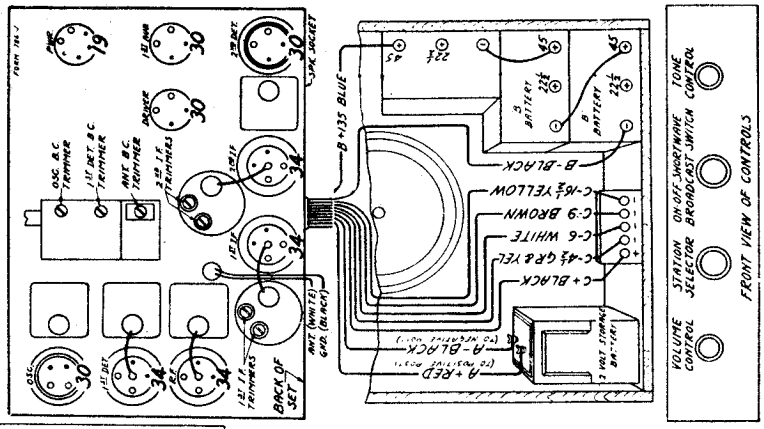

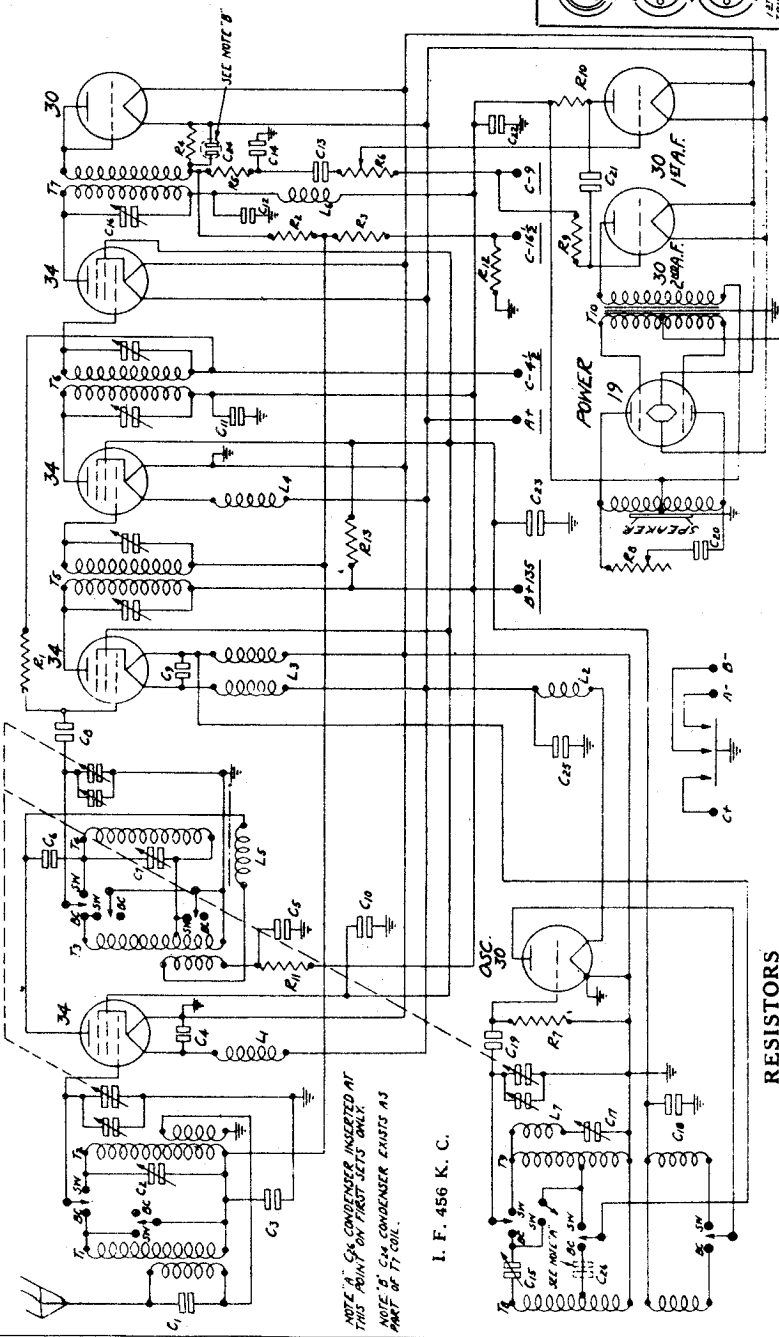

RESISTORS

Part No.	Code	Resistance	Wattage	Type
P-A95305	R1	3 Megohm	.2	Carbon
P-A95305	R2	3 Megohm	.2	Carbon
P-A94805	R3	8 Megohm	.2	Carbon
P-A94304	R4	300,000 Ohm	.2	Carbon
P-A95104	R5	100,000 Ohm	.2	Carbon
P- 96016	R6	2 Megohm		Volume Control
P-A94104	R7	100,000 Ohm	.2	Carbon
P- 97013	R8	45,000 Ohm		Tone Control
P-A94105	R9	1 Megohm	.2	Carbon
P-A94104	R10	100,000 Ohm	.2	Carbon
P-A95102	R11	1,000 Ohm	.2	Carbon
P-A95153	R12	15,000 Ohm	.2	Carbon
P-B94652	R13	6,500 Ohm	.2	Carbon
*P- 97011		150,000 Ohm		Tone Control
*P-A95603		60,000 Ohm	.2	Carbon

* These parts were used on first models only—see article on "Changes in Early Models."

CONDENSERS

Part No.	Code	Capacity	Voltage	Type
P-80919	C1	250 mmf.		Moulded
P- 2102	C2	3-40 mmf.		Trimmer
P-81076	C3	.05 mf.	200V	Tubular
P-81076	C4	.05 mf.	200V	Tubular
P-81076	C5	.05 mf.	200V	Tubular
P-81094	C6	.006 mf.	600V	Tubular
P- 2102	C7	3-40 mmf.		Trimmer
P-81800	C8	50 mmf.		Wire Capacitor
P-81076	C9	.05 mf.	200V	Tubular
P-81102	C10	.25 mf.	140V	Tubular
P-81110	C11	.25 mf.	200V	Tubular
P-81076	C12	.05 mf.	200V	Tubular
P-81076	C13	.05 mf.	200V	Tubular
P-80977	C14	100 mmf.		Wire Capacitor
P- 2112	C15	300-500 mmf.		Trimmer
P- 1685	C16	40—100 mmf.		Trimmer
P- 1685	C17	40—100 mmf.		Trimmer
P-81076	C18	.05 mf.	200V	Tubular
P-81005	C19	35 mmf.		Moulded
P-81071	C20	.05 mf.	400V	Tubular
P-81094	C21	.006 mf.	600V	Tubular
P-82001	C22	4.0 mf.	150V	Electrolytic
	C23	8.0 mf.	150V	
	C24	Part of 3rd I. F. Coil		Assembly T7
P-81102	C25	.25 mf.	140V	Tubular
*P-81076	C26	.05 mf.	200V	Tubular
P-81027	3 Gang Condenser			

1934

©John F. Rider, Publisher

MODELS 9916,9917
Voltage,Resistance
Alignment

SPIEGEL, INC.

Condenser Alignment

Use a non-metallic screw driver for the adjustments. The complete procedure is as follows:

Intermediate Frequency Adjustment

Set the signal generator for 456 K. C. Connect the antenna lead of the signal generator to the grid of the 1st detector through a .05 mfd. condenser. Turn the tuning condenser rotor until the plates are completely out. The ground lead from the signal generator goes to the ground lead of the receiver. The volume control should be at the maximum position. Reduce the signal so that A. V. C. action is not obtained.

Then adjust the five I. F. trimmer condensers until maximum output is obtained. The adjusting screws for the 1st and 2nd trimmer condensers are reached from the top of the chassis and are in the round I. F. cans—See Fig. 2. The openings of these trimmer condensers are covered over by small cover plates which are held in position by screws. Loosen these screws until the cover plates can be swung around. **CAUTION—Use an insulated screwdriver for adjusting trimmers to prevent short circuiting to ground.** In the 3rd I. F. coil, only the primary has a variable trimmer condenser. This condenser is mounted on the back panel of the chassis as shown in Fig. 3 and the adjustment screw is reached through a hole in the back panel.

Broadcast Band Adjustment

The broadcast short wave switch should be in the broadcast position. Set the signal generator for 1730 K. C. Turn the rotor to the full open position. The antenna lead from the signal generator is in this instance connected to the antenna lead of the receiver. Reduce the signal so that A. V. C. action is not obtained. Adjust the oscillator broadcast trimmer until maximum output is obtained. This trimmer is on the tuning condenser and its location is shown in Fig. 2.

Then set the signal generator for 1500 K. C. Turn the rotor until maximum output is obtained. Loosen the set screw in the pointer hub and set the pointer at the 1500 K. C. mark on the broadcast band scale. Retighten the hub set screw. Then adjust the antenna and 1st detector broadcast trimmers until maximum output is obtained.

Next set the signal generator for 600 K. C. and adjust the 600 K. C. trimmer. The adjusting screw is reached through a hole in the front panel of the chassis as shown in Fig. 3. Turn the tuning condenser rotor until maximum output is obtained. Then turn the rotor slowly back and forth over this setting at the same time adjusting the 600 K. C. trimmer screw until the highest output is obtained.

Short Wave Band Adjustment

CAUTION—After the broadcast band alignment as described above has been made, do not change the adjustment of any of the broadcast band trimmers.

In aligning the short wave band of the receiver, it will be noted that the signal will be heard with the signal generator set at two points 912 K. C. apart. That is, if the receiver is tuned to 15,000 K. C. a signal will be heard when the signal generator is set at 15,000 K. C. and again at approximately 15,912 K. C. This is due to image reception or the fact that a 456 K. C. beat is obtained when the signal is 456 K. C. lower than the receiver oscillator and also when the signal is 456 K. C. higher than the receiver oscillator. Care should be taken to see that the receiver is tracked with the signal generator adjusted to the lower of the two frequencies at which a signal is heard, in order that the oscillator in the receiver will be 456 K. C. higher in frequency than the signal.

Turn the broadcast short wave switch to the short wave position. As explained above, the volume control should be at the maximum position and the signal should be reduced to prevent A. V. C. actior.

Next set the signal generator for 15,000 K. C. Turn the rotor until maximum output is obtained. Then adjust the antenna and 1st detector short wave trimmers for maximum output.

Next set the signal generator for 6000 K. C. and adjust the 6000 K. C. trimmer. This condenser is mounted on the front panel of the chassis as shown in Fig. 3 and is reached through a hole in the front panel. Turn the tuning condenser rotor until maximum output is obtained. Then turn the rotor slowly back and forth over this setting, at the same time adjusting the 6000 K. C. trimmer screw until the highest output is obtained.

Voltages at Sockets

Antenna Shorted to Ground
Batteries Up to Rated Voltages. See Fig. 1
Voltages Read from Negative Filament Terminal

Type of Tube	Function	Across Filament	Plate to Gnd.	Control Grid to Ground	Screen to Gnd.	Normal Plate M. A.
34	R. F.	2.0	135	4.5(1)	80	2.8
34	1st Det.	2.0	135	4.5(1)	80	3.0
30	Osc.	2.0	80			2.8
34	1st I. F.	2.0	135	4.5(1)	80	2.8
34	2nd I. F.	2.0	135	4.5	80	2.8
30	2nd Det.	2.0				
30	1st Audio	2 0	95	9.0(2)		0.35
30	2nd Audio	2.0	135	9.0(3)		3.0
19	Output	2.0	135	6.0		1.3

(1) Computed figure—cannot be read because of high resistance cir.
(2) Volume Control at minimum.
(3) As read at battery.

D. C. Resistance of Windings

Following are the D. C. resistances of the various windings in the chassis. The values given below will vary slightly in different sets.

Part No.	Item	Code	D. C. Resistance in Ohms
P-5176	B. C. Antenna R. F. Transformer, Primary	T1	28.0
	B. C. Antenna R. F. Transformer, Secondary	T1	5.0
	S. W. Antenna R. F. Transformer, Primary	T2	0.25
	S. W. Antenna R. F. Transformer, Secondary	T2	Small
P-5236	B. C. Interstage R. F. Transformer, Primary	T3	5.25
	B. C. Interstage R. F. Transformer, Secondary	T3	5.0
	S. W. Interstage R. F. Transformer, Secondary	T4	Small
P-5224	B. C. Oscillator Grid Coil	T8	2.4
	B. C. Oscillator Plate Coil	T8	3.5
	S. W. Oscillator Grid Coil	T9	1.0
	S. W. Oscillator Plate Coil	T9	Small
P-5179-A	1st I. F. Coil Primary	T5	12.0
	1st I. F. Coil Secondary	T5	13.0
P-5185	2nd I. F. Coil Primary	T6	5.5
	2nd I. F. Coil Secondary	T6	5.5
P-5186	3rd I. F. Coil Primary	T7	12.0
	3rd I. F. Coil Secondary	T7	30.0
P-50586-B	Audio Transformer Primary	T10	910.0
	Audio Transformer Secondary, Center tap to outside	T10	590.0
	Audio Transformer Secondary, Center tap to inside	T10	530.0
P-5189	Filament Reactor	L1	0.65
P-5189	Filament Reactor	L2	0.65
P-5235	Double Filament Reactor (each)	L3	0.3
P-5189	Filament Reactor	L4	0.65
P-5228	S. W. R. F. Interstage Plate Reactor	L5	28.0
P-5227	I. F. Isolating Reactor	L6	1.6
P-2179	Speaker Voice Coil, Center tap to outside		300.0
	Speaker Voice Coil, Center top to inside		250.0

©John F. Rider, Publisher

Schematic, Socket Trimmers, Voltage Parts

SPIEGEL, INC.

MODEL 9930
Chassis 25Y

VOLTAGES AT SOCKETS

Input 6.3 Volts—Antenna Disconnected at Connector

Type of Tube	Function	Volts at Heater	Plate to Cathode	Screen to Cathode	Grid to Cathode	Normal Plate M.A.
6D6	R. F.	6.2	154	95	3.0	5.2
6C6	1st Det. & Osc.	6.2	160	97	0	3.0
6D6	I. F.	6.2	154	95	3.0	5.2
75	2nd Det. & 1st A. F.	6.2	110	—	1.	.25
41	Power	6.2	143	146	14.	13.0

1934

Dec, 1934

Fig. 1—*Schematic Circuit Diagram*

On the Voltage Chart are given the voltages at the sockets with all tubes in and the set in operating condition. The antenna should be disconnected at the bayonet connector.

Fig. 2—*Location of Tubes and Vibrator*

CONDENSERS

Part No.	Code	Capacity	Voltage	Type
P-81814	C1	250 mmf.	Part of	Antenna Coil Assembly
P-82600D	C2	.50 mf.	200V.	Bypass Block
	C4	.10 mf.	140V.	
	C10	.25 mf.	140V.	
	C14	.05 mf.	300V.	
	C15	.10 mf.	200V.	
P-81116	C3	.05 mf.	200V.	Tubular
P-81815	C5	.35 mmf.	Part of	Grid Leak Assembly
P-81806	C6	70 mmf.	Part of	1st I. F. & Osc. Coil Assembly
	C7	70 mmf.		
P-81806	C8	70 mmf.	Part of	2nd I. F. Coil Assembly
	C9	70 mmf.		
P-81115	C11	.05 mf.	300V	Tubular
P-81114	C12	.006 mf.	600V.	Tubular
P-81814	C13	250 mmf.		Moulded
P-81132	C16	.10 mf.	300V.	Tubular
	C17	.01 mf.	120V.	In Choke Condenser Unit
	C18	.01 mf.	120V.	
P-81120	C19	.007 mf.	1600V.	Tubular
P-81122	C20	.10 mf.	300V.	Tubular
P-81121	C21	.50 mf.	140V.	Tubular
P-81816	C22	.002 mf.		Moulded
P-82002	C23	4.0 mf.	250V.	Dry Electrolytic Block
	C24	2.0 mf.	250V.	
	C25	4.0 mf.	25V.	
P-82500	Gang Condenser			

RESISTORS

Part No.	Code	Resistance	Watts	Type
P-B94351ww	R1	350 Ohm	.5	Flexible Wire Wound
P-B95253	R2	25,000 Ohm	.5	Carbon
P-B95103	R3	10,000 Ohm	.5	Carbon
P-A95105	R4	1 Megohm	.2	Carbon
P-A95105	R5	1 Megohm	.2	Carbon
P-A95504	R6	500,000 Ohm	.2	Carbon
P-A94752	R7	7,500 Ohm	.2	Carbon
P-A95104	R8	100,000 Ohm	.2	Carbon
P- 96017	R9	2 Megohm		Volume Control and Switch
P-A95503	R10	50,000 Ohm	.2	Carbon
P-A95204	R11	200,000 Ohm	.2	Carbon
P-A95504	R12	500,000 Ohm	.2	Carbon
P-B94801ww	R13	800 Ohm	.5	Flexible Wire Wound

In the first models of this receiver a bypass condenser block (P-82600) containing condensers: C2, C4, C10, C14, C15 and C16 was used. Condenser C16 was removed in the later models and added as a separate tubular condenser (P-81132) while the other condensers remained in the block (P-82600-D).

A second condenser change from the earlier models was in the electrolytic filter block (P-82002). In this block section C24 was changed from an 8 mfd., 250 volt to a 2 mfd., 250 volt condenser.

©John F. Rider, Publisher

©John F. Rider. Publisher

Condenser Alignment

Misalignment or mistracking of condensers generally manifests itself as broad tuning and lack of volume at portions or all of the standard wave band. The receivers are all properly aligned at the factory with precision instruments and realignment should not be attemped unless all other possible causes of the faulty operation have first been investigated and unless the service technician has the proper equipment. A signal generator that will provide accurately calibrated signals over the standard wave band and an output meter are required for indicating the effect of adjustments.

First remove the cover of the box. Leave the antenna and battery cables connected to the chassis.

Disconnect the car antenna and connect antenna cable lead to the lead from the signal generator.

Set the signal generator for 1650 K. C. Turn the rotor to the full open position. The antenna lead from the signal generator adjustment is connected to the antenna lead of the receiver. Adjust the trimmer of the oscillator section of the 3 gang condenser until maximum output is obtained. The oscillator section is the one with the cut plate rotor.

Now set the signal generator for 1400 K. C. and turn the rotor until maximum output is obtained. Adjust the other two trimmers on the gang condenser for maximum output.

To calibrate the receiver, tune in a station of known frequency at about the center of the dial. Remove the escutcheon plate and glass. The pointer is held in position by friction. Grasp the pointer at the center and turn it until it points to the frequency of the station being received.

The use of the cut plate type of condenser eliminates the necessity of a 600 K. C. padder and, therefore, no adjustment at this frequency is required.

Adjusting Antenna Trimmer

After the receiver is installed and the car antenna is connected it will be necessary to adjust the antenna trimmer. Tune in a weak signal between 1200 and 1400 K. C. with the volume control about three-fourths on. Drop the chassis from the cover. The location of the antenna trimmer is shown in Fig. 2. Turn the adjusting screw of this condenser up or down until maximum output is obtained. CAUTION—Do not turn any of the other trimmer adjusting screws for this adjustment.

Removing Chassis From Case

First unsolder the black, brown, yellow, and green speaker leads which connect to the terminal strip adjacent to the vibrator unit. Next, notice the small length of braided shielding which is soldered to the solder lug that is secured to the chassis case between the dial scale and the station selector control shaft. Unsolder this shielding at the lug.

Remove the 4 screws which hold the chassis in the case — 2 are in the side and 2 on the speaker panel of the chassis case. (Do not remove the four speaker mounting screws.)

Remove the two control knobs by pulling them off of the shaft.

Next remove the volume control. To do this first loosen the hexagonal nut on the inside of the case with a flat wrench. Then unscrew and remove the round knurled nut from the front.

The chassis may then be taken out.

Replacing Vibrator Unit

The vibrator unit is plugged in in the same manner as a tube. This unit may, in case of failure, be readily replaced. CAUTION—Polarity, as explained in the label on the unit and in the label on the metal box in the chassis, must be observed when plugging in vibrator unit.

In replacing the vibrator unit be sure to replace the corrugated cardboard pad, which prevents the unit from working its way out of the socket.

When servicing this receiver, a new vibrator unit should be tried out in the same manner as a new set of tubes would be tried out.

One or more vibrator units should be kept on hand for replacement purposes.

Replacing Volume Control

To remove the volume control and the switch, first pull the knob from the volume control shaft. Next loosen the hexagonal nut on the inside of the case with a flat end wrench. Then unscrew and remove the round knurled nut from the front.

The old volume control and switch connections may now be unsoldered and the new unit put in its place and the leads resoldered.

Fasten the volume control to the case in the reverse order in which it was removed.

D. C. Resistance of Windings

Following are the D. C. resistances of the various windings in the chassis. The values given below will vary slightly in different sets.

Part No.	Item	Coils	D.C. Resistance in Ohms
P-5247	Antenna Trans. Pri. in Series		17.50
	Antenna Trans. Sec.	T1	5.25
P-5248	R. F. Interstage Trans. Pri.	T2	2.31
	R. F. Interstage Trans. Sec. (Center Tap to Inside)	T2	3.23
	(Center Tap to Outside)		3.98
P-5249	1st I. F. Trans. Primary	T3	100.00
	1st I. F. Trans. Secondary	T3	100.00
	Oscillator Cathode Coil (Total)	T4	4.50
	Oscillator Plate Coil	T4	9.00
P-5250	2nd I. F. Trans. Pri.	T5	100.00
	2nd I. F. Trans. Sec.	T5	100.00
P-50656	Power Trans. Pri.	T7	0.36
	Power Trans. Sec.	T7	860.00
P-5174	"B" R. F. Choke	L1	1.65
P-50657	Power Choke	L2	390.00
P-5251	"A" Choke	L3	Small
P-5253	Line Choke	L4	Small
P-5252	Choke Coil	L5	Small
P-2228	Output Trans. Pri.	To	600.00
	Output Trans. Sec. and Voice Coil in Par.		0.80
	Speaker Field		6.00

When ordering parts be sure and give the part number. Also give the complete serial number which includes the Series No.

Part No.	Item
P-1883	6B6 Tube Socket
P-1886	6C6 Tube Socket
P-1775	75 Tube Socket
P-1911	41 Tube Socket
P-5247	Antenna Coil Assembly Less Can
P-40415B	Can for above assembly Part of Gang Condenser Assembly
P-5248	R. F. Interstage Coil Assembly Less Can
P-40447C	Can for above assembly Part of Chassis Assembly
P-5249	1st I. F. and Oscillator Coils and Can Assembly
P-5250	2nd I. F. Coil and Can Assembly
P-2228	Dynamic Speaker
P-10359	Cardboard Baffle for Speaker
P-2229	Vibrator Unit
P-3030	Vibrator Socket
P-50656	Power Transformer
P-5251	R. F. "A" Choke Coil
P-5174	R. F. "B" Choke Coil
P-50657	Power Choke Coil Assembly
P-5253	Filament Choke Coil
P-2220	2 Half Tube Shields with Clamping Ring
P-2240	Grid Leak and Condenser Assembly
P-2224	Knobs
P-20960	Thumb Screws
P-10356	Glass Crystal
P-10361	Gasket for Glass Crystal
P-30342A	Grid Clip only
P-10213	Wide Rubber Bands for Tubes
P-70774	Shielded Antenna Cable
P-70781	"A" Battery Cable
P-1421	Single Lug Terminal Strip
P-2082	Double Insulated Terminal Strip
P-2232	Five Lug Terminal Strip
P-1933	Cinch Terminal Lug
P-20701	Drive Tension Spring
P-20963	Horse-shoe Lock (Washer)
P-2227	Dial Strip
P-20954	Dial Pointer

Replacing Drive Cord

The drive cord in this receiver may be replaced as follows:

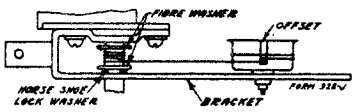

Fig. 3—*Cord Drive—Top View*

First remove the chassis from the case as explained on page 4.

Some of the first models did not have two fibre "end" washers on the drive shaft to protect the drive cord as shown in Fig. 2. If this is the case, these washers should be put on as follows:

Separate and take off the horse-shoe lock washer which holds the drive shaft in position. This may be done with a fine jawed, long nose plier.

Now pull the drive shaft out just far enough to permit the two fibre washers to be slipped over the end of the shaft.

Then slip the shaft back into place and replace the horse-shoe lock washer.

Knot one end of the new drive cord and with the condenser plates in a completely closed position, slip the drive cord through the small hole "A" in the drive drum — see Fig. 4. The knot will then be on the inside of the drum.

Now wrap the cord around the lower half of the drive drum as indicated and bring it up to the drive shaft. Proceed by wrapping it in a clockwise direction (from front) around the drive shaft three and one-quarter turns between the two fibre washers, progressing towards the front of the chassis. Be sure that the condenser plates are kept in a closed position and that the cord is held tight.

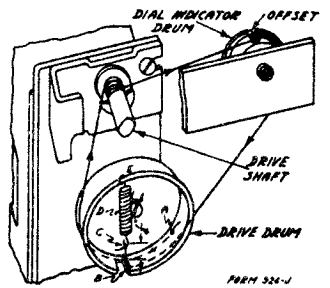

Fig. 4—*Cord Drive Replacement*

Set the dial indicator drum so that the offset is at the top or a little to the right of the center — see Fig. 4.

Wrap the cord from the drive shaft once around the offset in the dial indicator drum and then approximately one and one-half turns around the drum itself in a clockwise direction, progressing toward the back.

From the dial indicator drum draw the cord over the lower right hand quarter of drive drum as shown in Fig. 4.

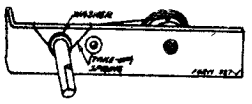

Fig. 5—*Drive "Take-up" Spring*

Then bring the cord inside of the drum by way of the turned-in portion of the flange at "B".

Tie the drive tension spring "D" to the loose end of the cord at the point "C" just above the top edge of the lip "B" as shown in the illustration. This should be done so that the lower hook of spring "D" at point "C" will be between ⅛" and ⅜" from top edge of the turned-in portion of the flange "B" in the flange of the drive drum. After the spring is hooked and the drive turned over several times the tension in the cord will cause this distance to become about ¼".

Now, by applying a tension on the drive spring "D", hook the other end of the spring into the small hole "E" near the top of the drive drum. Hook spring from the inside out.

After the cord has been put on it may be necessary to calibrate the receiver as explained in the article on condenser alignment.

All of the earlier models did not have drive shaft "take-up" springs. This spring will prevent any tendency toward change of setting should the receiver be subjected to vibration. To insert these springs and fibre washers on the drive shaft proceed as follows:

Remove the station selector knob by pulling it off of the shaft.

Slip the small fibre washer over the shaft and clip the "take-up" spring to the drive bracket as shown in Fig. 5.

The chassis may now be replaced into the case in the reverse order of the manner in which it was removed.

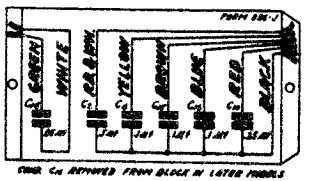

Fig. 6—*Condenser Block Internal Wiring*

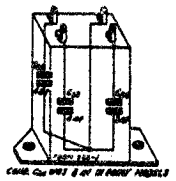

Fig. 7—*Electrolytic Block Internal Wiring*

©John F. Rider, Publisher

STEWART-WARNER CORP.

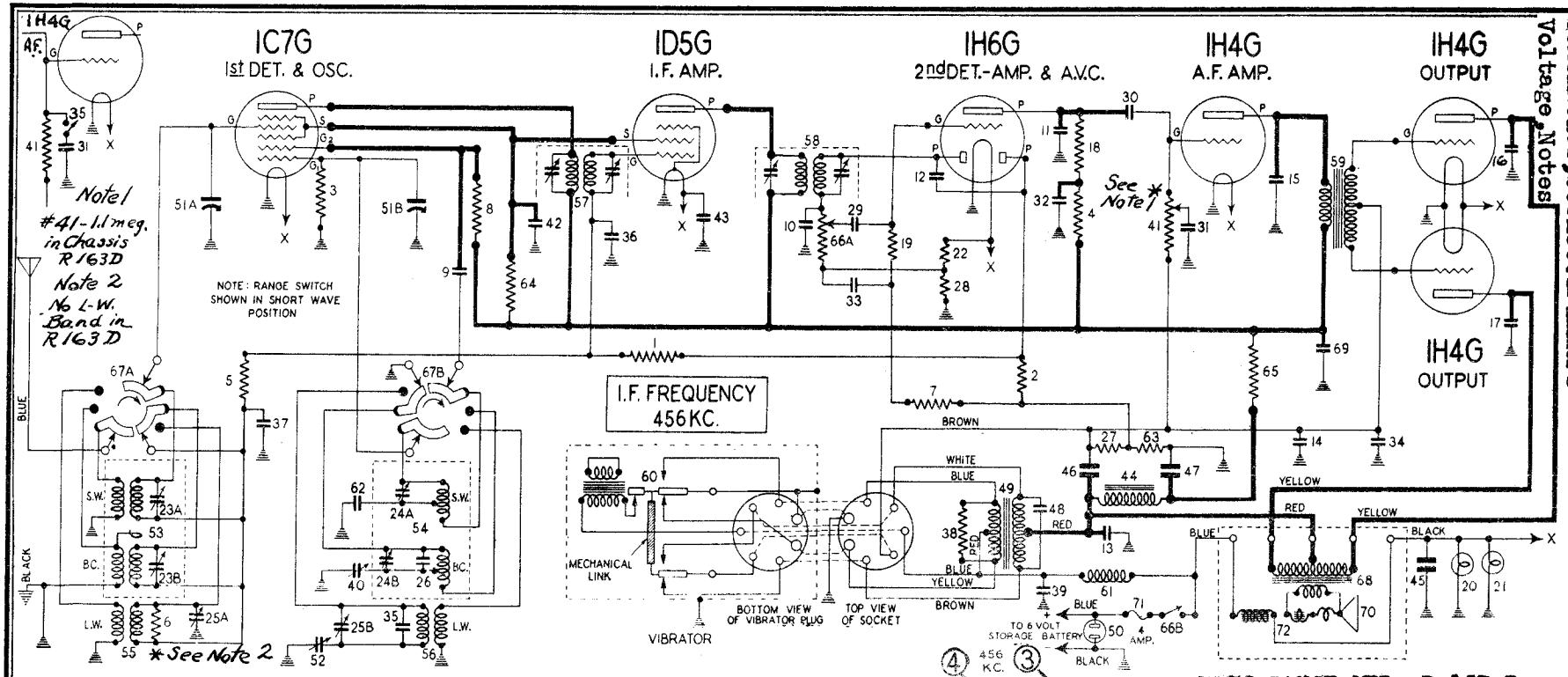

A BATTERY VOLTAGE 6.0 VOLTS DIAL TUNED TO 530 KC.

BOTTOM VIEW OF CHASSIS

VOLTAGES MEASURED BETWEEN SOCKET TERMINALS AND CHASSIS
D.C CURRENT DRAIN 1.95 AMPERES
SEE NOTE (X)

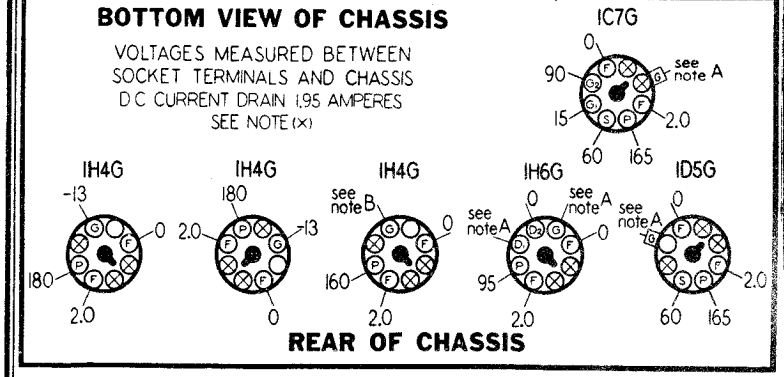

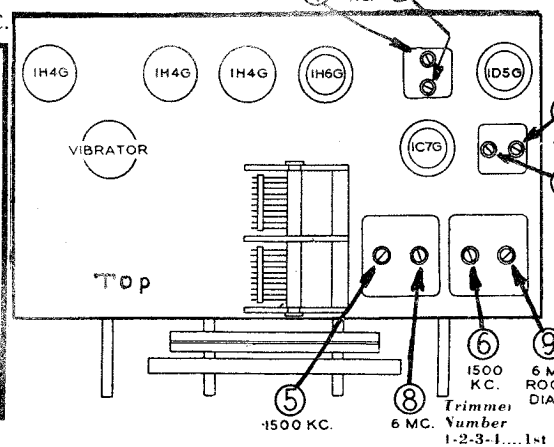

FREQ. RANGE MOD. R-164D
140 to 400 KC
540 to 1750 KC
2.2 to 7.0 MC

FREQ. RANGE MOD. R-163-D
540 to 1750 KC
2.2 to 7 MC

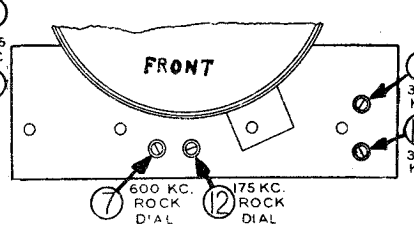

November 5, 1936

TRIMMER LOCATIONS

Trimmer Number		Alignment Frequency
1-2-3-4	1st and 2nd I.F. transformer trimmers	456 KC.
5	Broadcast oscillator shunt trimmer	1500 KC.
6	Broadcast antenna shunt trimmer	1500 KC.
7	Broadcast oscillator series padder	600 KC.
8	Short wave oscillator shunt trimmer	6 MC.
9	Short wave antenna shunt trimmer	6 MC.
10	Long wave oscillator shunt trimmer	350 KC.
11	Long wave antenna shunt trimmer	350 KC.
12	Long wave oscillator series padder	175 KC.

IMPORTANT: Use a high resistance voltmeter of 1,000 ohms per volt.

NOTE A: The grid bias for the 1C7G, 1D5G, 1H6G and the A.V.C. delay voltage for one diode of the 1H6G is —2.7 volts measured across resistor 63.

NOTE B: The grid bias on the 1H4G 1st audio and output tubes is —13.0 volts measured across resistors 27 and 63.

NOTE (X): These terminals indicate tube pins which are not internally connected to any element.

MODELS 1631D-1639D incl.
MODELS 1641D-1649D "
Alignment, Parts, Notes

STEWART WARNER CORP.

ALIGNING EQUIPMENT: For proper alignment, an output meter and an accurately calibrated oscillator with a tuning range from 175 KC. to 6 MC. are required.

Connect the output meter across the plates of the output tubes. Convenient points to make the plate connections are the yellow wires on the speaker terminal strip.

ALIGNING THE I.F. AMPLIFIER: Turn the volume control to maximum volume position and keep it in this position throughout the entire alignment procedure. Turn the range switch to the broadcast position (center position).

Connect the test oscillator output leads to the 1C7G control grid and chassis with a 1 mfd. condenser in series with the oscillator output. Set the oscillator to exactly 456 KC. Set the receiver dial at any point where it has no tuning effect on the oscillator signal.

Adjust the four I.F. trimmers, Nos. 1, 2, 3 and 4, for maximum output meter deflection, then repeat the trimmer adjustment.

BROADCAST BAND CALIBRATION AND ALIGNMENT: With the gang condenser in full mesh, the dial pointer should be on the yellow horizontal line below 530 KC. on the dial scale.

Leave the range switch in the center position. Connect a 400 or 500 ohm carbon resistor in series with the oscillator output and the receiver antenna lead (blue wire in the back of the chassis). Connect the grounded oscillator output wire to the receiver ground lead (black wire in back of chassis).

Adjust the test oscillator to exactly 1500 KC. Tune in the 1500 KC. oscillator signal or a station above 1300 KC. on the dial and determine whether the dial calibration is correct at the high frequency end of the dial. If the calibration is correct, do not adjust the broadcast oscillator shunt trimmer No. 5. If the calibration is incorrect, adjust trimmer No. 5 to give proper calibration.

Carefully tune the receiver to the 1500 KC. oscillator signal and adjust trimmer No. 6 for maximum output.

Adjust the test oscillator to 600 KC. and tune the receiver to the signal. Adjust trimmer No. 7 for maximum output. Then try to increase the output meter reading by detuning No. 7 slightly and retuning the receiver dial. If the output goes down, detune the trimmer in the opposite direction. Continue detuning the trimmer and retuning the receiver dial until maximum output meter deflection is secured. This operation is commonly known as "rocking" and when performed as described will give maximum selectivity and sensitivity even though the dial may be slightly off calibration at 600 KC.

Repeat the adjustment of Nos. 5 and 6 at 1500 KC.

SHORT WAVE BAND CALIBRATION AND ALIGNMENT: Turn the range switch to the short wave band (maximum counter-clockwise position).

Adjust the test oscillator to exactly 6.0 MC.

Tune in the 6 MC. oscillator signal at or near 6 MC. on the receiver dial to determine whether the receiver dial calibration is correct at 6 MC. If it is, do not adjust the short wave band oscillator shunt trimmer No. 8. If the calibration is incorrect, set the dial pointer to 6 MC. on the dial, and adjust the oscillator shunt trimmer No. 8 until the oscillator signal comes in at this point. If there are two peaks, the proper one is that with the trimmer screw farthest out.

Carefully tune the receiver to the signal and adjust trimmer No. 9 for maximum output. Then try to increase the output by detuning No. 9 slightly and retuning the receiver. Continue detuning No. 9 and retuning the receiver until the output meter deflection is a maximum.

LONG WAVE BAND CALIBRATION AND ALIGNMENT: Turn the range switch to the long wave band position (maximum clockwise position) and adjust the test oscillator to exactly 350 KC.

Tune in the oscillator signal at or near 350 KC. on the receiver dial to determine whether the dial calibration is correct at this point. If it is, do not adjust trimmer No. 10. If the calibration is incorrect, set the receiver dial pointer to 350 KC. and adjust trimmer No. 10 for maximum output.

Carefully tune the receiver to the signal, then adjust trimmer No. 11 for maximum output.

Adjust the test oscillator to 175 KC. and tune in the signal at or near 175 KC. on the receiver dial. Adjust padder No. 12 for maximum output, then try to increase the output by detuning padder No. 12 and retuning the receiver dial.

Repeat the adjustment of trimmers Nos. 10 and 11 at 350 KC.

PROPER SIZE OF FUSE

The early production of this model was equipped with 3-ampere fuses. If one of these blow out, and if there is nothing wrong in the set to cause it to blow, replace with a 4-ampere fuse.

PRICES SUBJECT TO CHANGE WITHOUT NOTICE

Diagram Number	Part Number	Description	List Price
1, 2	83072	510,000 ohm ¼ watt carbon resistor	$0.12
3, 4	83080	51,000 ohm ¼ watt carbon resistor	.12
5, 6, 7	83082	260,000 ohm ¼ watt carbon resistor	.12
8	83286	21,000 ohm ¼ watt carbon resistor	.12
9, 10, 11	83539	260 mmfd. mica condenser	.20
12	83783	110 mmfd. mica condenser	.20
13, 14, 15, 16, 17	83784	.0011 mfd. mica condenser	.25
18	84198	110,000 ohm ¼ watt carbon resistor	.12
19	84235	1.1 megohm ¼ watt carbon resistor	.12
20, 21	84515	Dial lamp 2 Volt .06 ampere	.25
22	84888	300 ohm ½ watt wirewound resistor	.15
23A, 23B, 24A, 24B, 25A, 25B	85087	Dual trimmer	.35
26	85454	11 mmfd. mica condenser	.15
27	85691	500 ohm ½ watt wirewound resistor	.20
28	88009	200 ohm ½ watt wirewound resistor	.15
29, 30	88026	.02 mfd. 400 volt paper condenser	.25
31	88030	.01 mfd. 400 volt paper condenser	.25
32, 33	88046	.1 mfd. 150 volt paper condenser	.25
34	88170	10 mfd. 25 volt electrolytic condenser	.80
35	88173	50 mmfd. mica condenser	.20
36, 37	88189	.05 mfd. 200 volt paper condenser	.25
38	88204	210 ohm ½ watt carbon resistor	.15
39	88285	1.25 mfd. 150 volt paper condenser	.80
40	88478	Variable padding condenser	.38
41	88488	Tone Control—500,000 ohms	.80
42, 43	88990	.5 mfd. 150 volt paper condenser	.35
44	89117	Filter choke	1.35
45	89145	100 mfd. 12 volt electrolytic condenser	.85
46, 47	89147	8 mfd. 250 volt electrolytic condenser	.90
48	89153	.005 mfd. 1500 volt paper condenser	$0.10
49	89164	Power transformer (6 volt primary)	3.60
50	89170	Reading lamp plug receptacle	.15
51A&51B	89205	Gang condenser	4.00
52	89206	Variable Padding condenser	.15
53	89207	Antenna coil & shield Assembly (B.C. & S.W.) with trimmers	1.90
54	89209	Oscillator Coil & Shield Assembly (B.C. & S.W.) with trimmers	3.00
55	89211	Antenna coil assembly (L.W.)	1.40
56	89212	Oscillator coil assembly (L.W.)	1.00
57	89226	1st I.F. transformer & shield assembly	2.50
58	89227	2nd I.F. transformer & shield assembly	2.50
59	89228	Push Pull input transformer	3.50
60	89272	Vibrator	5.00
61	89273	"A" choke assembly	.30
62	89275	.002 mfd. mica condenser	.40
63	89276	140 ohm ½ watt wirewound resistor	.12
64	89277	35,000 ohm ½ watt carbon resistor	.15
65	89278	1100 ohm ¼ watt carbon resistor	.35
66A, 66B	89332	Volume control 500,000 ohm with off on switch	1.20
67A&67B	89357	Range switch	1.50
68	89401	Output transformer for R257D & R258D speakers	2.60
69	89421	.1 mfd. 200 volt paper condenser	.25
70	89428	Diaphragm, voice coil and spider assembly for R257D speaker. For R258D speaker—order complete	1.75
71	89828	4 ampere 25 volt fuse	.05
72	R257D	6" Dynamic Speaker	6.75
	R258D	8" Dynamic Speaker	8.00
88165		Tube shield cap—plain	.06
88249		"A" lead with cap (short section of battery cable)	.05
88571		Vibrator shield assembly	.23
89169		Vibrator socket shield (under chassis)	.25
89437		"A" battery clip	.20
89438		"A" battery cable, clips and fuse holder	1.65
89460		Knob—for range switch	.30
89461		Knob—tone, tuning and volume controls	.25

The very low battery drain of 1.7 to 2.0 amperes is obtained by the use of two volt tubes and an efficient vibrator power supply. The filaments of the tubes and the dial bulbs are connected in parallel and the field coil of the dynamic speaker is used to reduce the voltage from six to two volts. Thus the set uses little current and also has the excellent tone quality made possible by the use of a dynamic speaker. 60 milliampere dial light bulbs are used. In replacing these, be sure to use the correct type. If ordinary 2.5 volt dial light bulbs or flashlight bulbs are used, the tube filaments will not receive the proper voltage.

Since a gas engine charger usually charges at a high rate, it is absolutely essential to stop the engine before turning on the radio set. However, when a Windcharger is used, ordinarily the voltage will not be excessive unless the set has been used very little or the wind has been blowing hard for some time. Thus, with a Windcharger it is usually satisfactory to operate the set while charging the battery although there is some danger of injuring the tubes if the battery is fully charged.

©John F. Rider, Publisher

©John F. Rider, Publisher

STEWART WARNER CORP. Chassis R-167S, R-168
MODELS 1671 - 1689 incl.
Schematic, Voltage, Socket
Trimmers

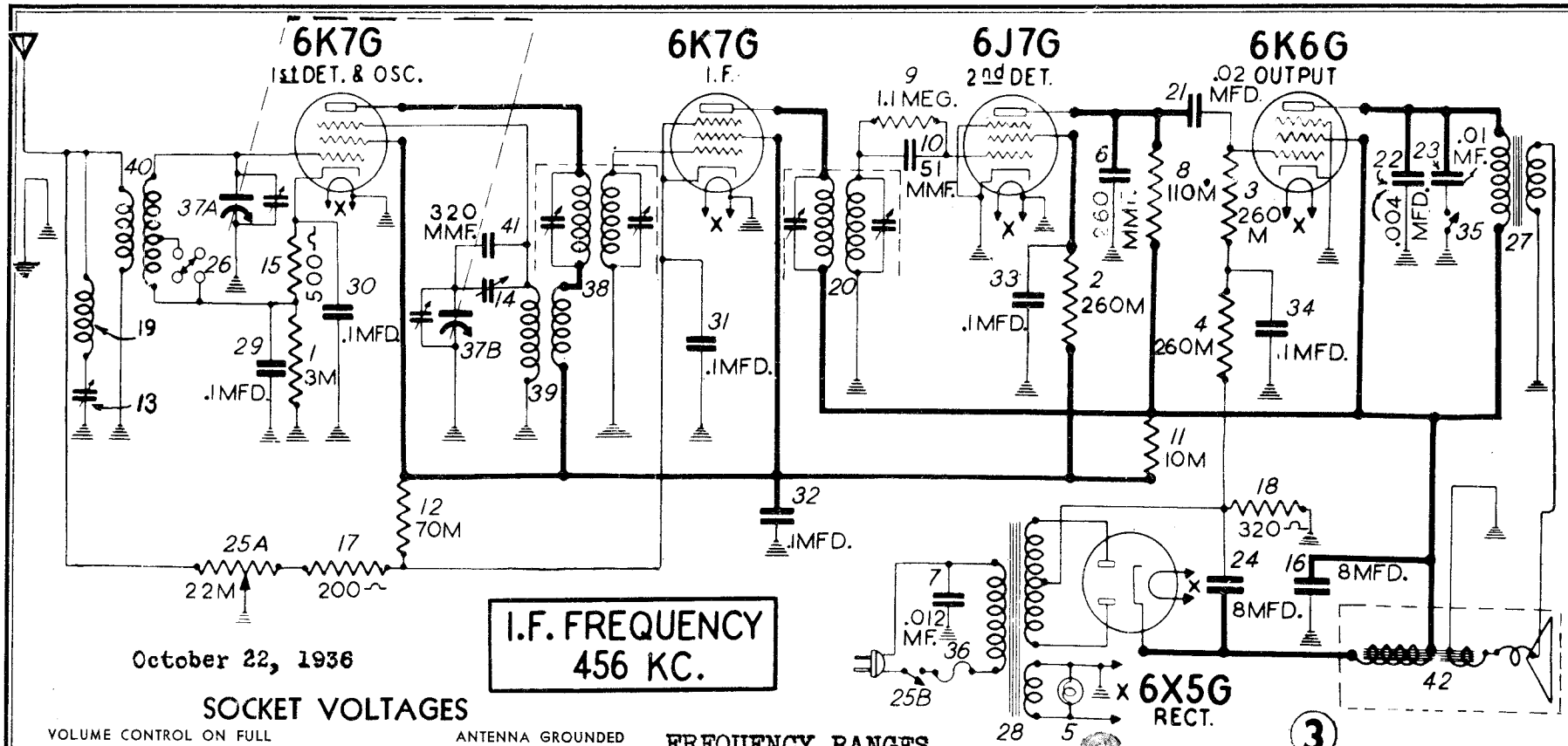

October 22, 1936

SOCKET VOLTAGES

VOLUME CONTROL ON FULL
RANGE SWITCH SET ON BROADCAST POSITION

ANTENNA GROUNDED
DIAL TUNED TO 525 KC.

BOTTOM VIEW OF CHASSIS

VOLTAGES MEASURED BETWEEN SOCKET TERMINALS AND CHASSIS

A.C. LINE VOLTAGE 115 VOLTS

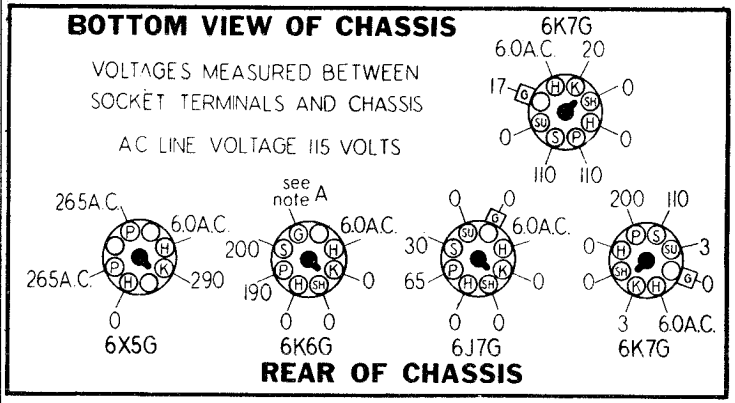

REAR OF CHASSIS

IMPORTANT: Use a high resistance voltmeter of 1000 ohms per volt.

NOTE A: The grid bias for the 6K6G is —14.0 volts measured across resistance 18.

FREQUENCY RANGES

BROADCAST BAND
1750 to 540 KC

POLICE BAND
(No alignment frequency required)

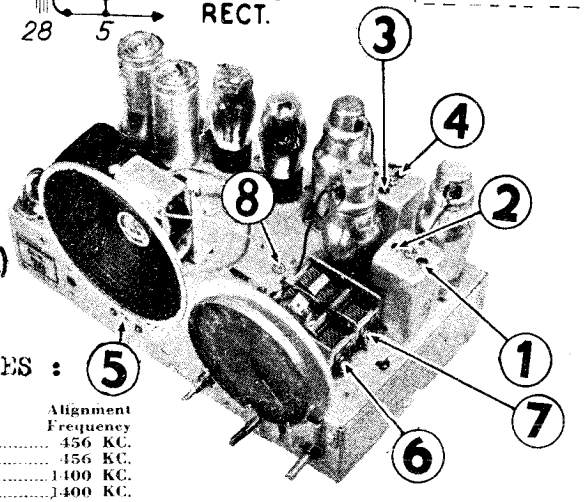

ALIGNMENT FREQUENCIES :

Trimmer Number	Trimmer Location	Alignment Frequency
1, 2, 3, 4	I.F. Trimmers	456 KC.
5	Wave trap trimmer	456 KC.
6	Oscillator shunt trimmer	1400 KC.
7	Antenna trimmer	1400 KC.
8	Oscillator padding trimmer	600 KC.

MODELS 1671 - 1689 incl.
Chassis R-167S,R-168

STEWART WARNER CORP.

Circuit Data,Alignment
Parts List

CIRCUIT DESCRIPTION

The R-167-S and R-168 chassis are identical with the exception of the size and location of the speaker and the physical location of a few other parts. The R-167-S, which is used in the table model cabinet, has a 5 inch speaker mounted on the chassis and the variable condenser, dial and the control shafts are located on the right side of the chassis. The R-168 is used in the console with a separate 8 inch speaker while the variable condenser, dial, and shafts are in the center of the chassis.

These receivers use a superheterodyne circuit which employs five glass tubes with octal bases. The intermediate frequency is 456 KC. The tuning range of this chassis includes, in addition to the standard broadcast band, the two police radio bands. The 2500 KC. police band can be tuned in around 1600 KC. on the broadcast dial with the range switch in the short-wave position (counter clockwise).

The volume control is double acting. It simultaneously changes the antenna signal input and the I. F. stage bias. Because of the sensitivity of this receiver, and due to the fact that it does not have A. V. C., it requires an antenna that is shorter than usual. The short antenna is particularly necessary where interference from powerful local stations is encountered, and where difficulty is experienced in properly controlling the volume.

When tuning on the short wave band, local broadcast stations can be heard in the background at their regular positions on the dial. This is a normal condition, and is due to the tapped coil method of tuning the antenna coil secondary to the short wave band. No aligning adjustments are required on the short wave band.

A wave trap is connected across the primary of the antenna coil to reduce code interference from stations with a frequency near 456 KC.

ALIGNING EQUIPMENT

For proper alignment of this receiver, an output meter and a high grade modulated service oscillator are essential. The oscillator should be capable of generating the frequencies of 456 KC., 600 KC. and 1400 KC. The test oscillator calibration should be checked, using broadcast station signals as standards. For trimmer adjustment, it is advisable to use an all bakelite screwdriver, although one with a small metal tip may be used.

ALIGNING THE I.F. CIRCUIT

1. (a) Connect the output meter in series with a .25 mfd. condenser between the plate of the 6K6G tube and ground, or across the voice coil, depending on the type of meter.

(b) Turn the volume control to the maximum volume position. (Note: The volume control should be kept in this position throughout the entire alignment procedure.) Ground the antenna lead to the chassis.

(c) Turn the range switch to the right (clockwise) to the broadcast position.

(d) Adjust the test oscillator to exactly 456 KC. and connect its output in series with a .1 mfd. condenser to the control grid of the 6K7G first detector tube and the chassis.

(e) Align I. F. trimmers No. 1, 2, 3 and 4 for maximum output as indicated on the output meter. No inward or sideward pressure should be applied to the alignment tool, or the condenser may spring back to a different setting as soon as the tool is removed.

(f) Repeat all I. F. trimmer adjustments since the changing of each trimmer may affect the others.

456 KC. WAVE TRAP ADJUSTMENT

2. (a) Disconnect the antenna lead from ground.

(b) Connect the test oscillator output in series with a .00025 mfd. condenser to the antenna lead, and connect the test oscillator ground lead to the receiver chassis. Ground the chassis.

(c) Without changing the test oscillator from the frequency setting used in aligning the I. F. stage, adjust trimmer No. 5 for **MINIMUM** output. Increase the test oscillator output as a minimum is reached, in order to obtain a clearly defined setting of the trimmer. NOTE: If code interference transmitted on a frequency slightly different than 456 KC. is troublesome, the wave trap should be adjusted for **MINIMUM** output with the test oscillator set to the same frequency as the signal that is causing interference.

DIAL CALIBRATION

3. (a) The dial pointer should indicate 530 KC. with the gang condenser in full mesh.

(b) Adjust the test oscillator to exactly 1400 KC.

(c) Tune in a broadcast station with a known frequency of about 1300 to 1400 KC. to determine whether the dial calibration is correct at the high frequency end of the dial. If no such station can be heard, tune in the 1400 KC. oscillator signal to check calibration.

(d) If the calibration is correct, do not adjust trimmer No. 6 (oscillator shunt trimmer). If the calibration is not correct, adjust trimmer No. 6 to give proper calibration at the high frequency end of the dial.

ALIGNMENT

4. (a) With the test oscillator set at 1400 KC. tune the receiver to the signal for maximum output.

(b) Adjust trimmer No. 7 for maximum output. Do not touch trimmer No. 6 as this will change the calibration.

(c) Adjust the test oscillator to exactly 600 KC. and tune the receiver to the signal. Adjust trimmer No. 8 for maximum output. Then try to increase the output by detuning the trimmer and retuning the receiver dial. If this reduces the output, detune the trimmer in the opposite direction. Continue detuning the trimmer and retuning the dial until a maximum output meter deflection is secured. This operation is commonly known as "rocking." The object of this adjustment is to find the combination of trimmer adjustment and tuning condenser position which gives the maximum output. This adjustment should not be changed regardless of whether the dial reads exactly 600 KC. or slightly off 600 KC. for maximum output.

(d) Check the adjustment of trimmers No. 6 and 7 at 1400 KC.

No trimmers are provided for alignment on the short wave band.

Diagram Number	Part Number	Description	List Price
1	71657	3000 ohm ¼ watt carbon resistor	$ .25
2-3-4	83082	260,000 ohm ¼ watt carbon resistor	.12
5	83278	Pilot lamp, No. 40, 6-8 volts	.15
6	83539	260 mmfd. mica condenser	.20
7	83976	.012 mfd. 1000 V. shielded condenser	.40
8	84198	110,000 ohm ¼ watt carbon resistor	.12
9	84235	1.1 megohm ¼ watt carbon resistor	.12
10	85061	51 mmfd. mica condenser	.15
11	85061	10,000 ohm 1 watt carbon resistor	.20
12	85266	70,000 ohm ¼ watt carbon resistor	.20
13	85285	456 KC. wave trap trimmer	.40
14	85285	Variable padding condenser	.40
15	85691	500 ohm ½ watt wire wound resistor	.20
16	88007	8 mfd. 250 V. electrolytic condenser	1.00
17	88009	200 ohm ½ watt wire wound resistor	.15
18	88010	320 ohm 1½ watt wire wo'd resistor	.15
19	88014	456 KC. wave trap coil	.50
20	88017	2nd I.F. transformer	2.00
21	88026	.02 mfd. 400 V. paper condenser	.25
22	89826	.004 mfd. 750 V. paper condenser	.24
23	88030	.01 mfd. 400 V. paper condenser	.25
24	88033	.8 mfd. 350 V. electrolytic condenser	1.10
25-A/25-B	88036	Volume control (22,000 ohm) / A.C. line switch	1.25
26	88037	Range switch	.60
27	88040	Output transformer (R-246-A or R-265-A speaker)	1.50
28	88044	Power transformer, 115 V. 60 cycle (167AS, 168A)	$4.20
28	88138	Power transformer, 115 V. 25 cycle (167BS, 168B)	5.50
28	89251	Power transformer, 220 V. 50 cycle (167KS)	3.75
28	89756	Power transformer, 105 to 250 V., 50 to 133 cycles (167WS)	7.00
29-30-31/32-33-34	88046	.1 mfd. 150 V. paper condenser	.25
35	88054	Tone control switch	.30
36	88055	Fuse, ¾ ampere	.12
28	88138	Power transformer, 115 V. 25 cycle (167BS, 168B)	5.50
28	89251	Power transformer, 220 V. 50 cycle (167KS)	3.75
37-A to B	89500	Two gang condenser	3.25
38	89575	1st I.F. transformer	2.25
39	89576	Oscillator coil assembly	.75
40	89581	Antenna coil assembly	1.00
41	89587	320 mmfd. mica condenser	.24
28	89756	Power transformer, 105 to 250 V., 50 to 133 cycles (167WS)	7.00
22	89826	.004 mfd. 750 V. paper condenser	.24
42	R-246-A / R-265-A	5" dynamic speaker (R-167) / 8" dynamic speaker (R168)	4.50 / 5.80

13923	Spring washer for drive shaft	$ .05
88106	Dial gasket	.01
89361	Dial frame and bracket assembly	.25
89365	Driven disc and bearing assembly	.36
89378	Drive disc and shaft assembly	.30
89386	Dial glass	.15
89400	Dial scale	.50
89453	Pointer and stud assembly	.05
89613	Escutcheon	.55

MISCELLANEOUS PARTS

Part Number	Description	List Price
67590	Flat steel washer	$0.01
83552	No. 10x⅞ S.H.H. screw	.03
84805	Felt washer for knob	.01
88056	Fuse mounting	.15
88057	Fuse cover	.08
88115	Knob (push on)	.20
88161	Tube shield section	.08
88164	Tube shield cap	.06
89363	Light bracket assembly	.16
89381	Bearing drive for dial shaft	.05
89627	No. 2x¼ oval head wood screw	.01

PRICES SUBJECT TO CHANGE WITHOUT NOTICE

©John F. Rider, Publisher

©John F. Rider, Publisher

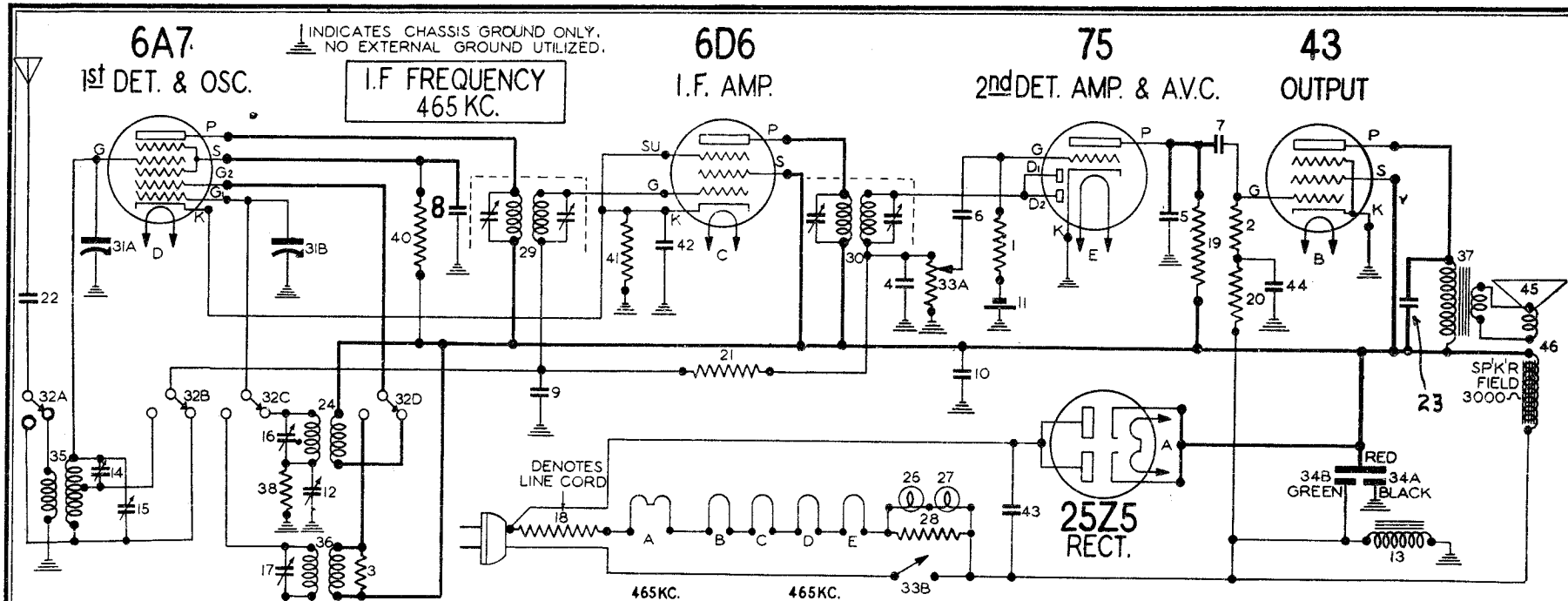

MODEL R-171
November 18, 1936

TUNING RANGE

535 to 1720 KC
2.3 to 6.15 MC

ALIGNMENT

Trimmer Number		Alignment Frequency
1.	2nd I.F. Transformer Trimmer	465 KC.
2.	2nd I.F. Transformer Trimmer	465 KC.
3.	1st I.F. Transformer Trimmer	465 KC.
4.	1st I.F. Transformer Trimmer	465 KC.
5.	Broadcast oscillator shunt trimmer	1720 KC.
6.	Broadcast antenna trimmer	1400 KC.
7.	Broadcast oscillator series padder	600 KC.
8.	Short-wave oscillator shunt trimmer	6 MC.
9.	Short-wave antenna shunt trimmer	6 MC.

TRIMMER LOCATIONS

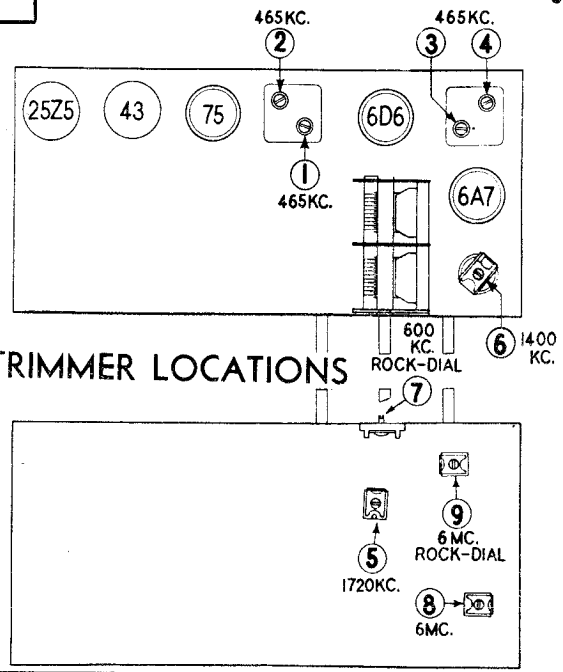

SOCKET VOLTAGES

VOLUME CONTROL ON FULL
RANGE SWITCH SET ON BROADCAST POSITION

ANTENNA GROUNDED
DIAL TUNED TO 535 KC.

BOTTOM VIEW OF CHASSIS

LINE VOLTAGE 115 VOLTS
HEATER VOLTAGES MEASURED DIRECTLY ACROSS SOCKET TERMINALS. ALL OTHER VOLTAGES MEASURED BETWEEN SOCKET TERMINALS AND CHASSIS.

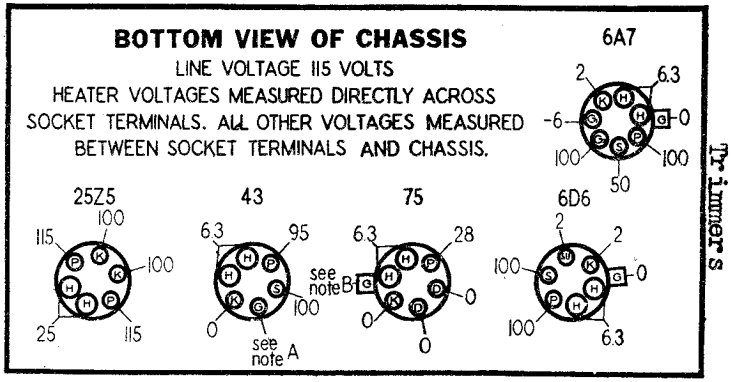

REAR OF CHASSIS

IMPORTANT: Use a high resistance voltmeter of 1,000 ohms per volt.
NOTE A: The control grid voltage of the 43 output tube is —16 volts measured across choke 13.
NOTE B: The control grid bias of the triode section of the 75 tube is —1 volt as supplied by the bias cell (number 11), however, this voltage can be measured only with a vacuum tube voltmeter.

Schematic, Socket Voltage
Trimmers

©John F. Rider, Publisher

ALIGNING THE I.F. AMPLIFIER

(a) Turn the volume control to maximum volume position and keep it in this position throughout the entire alignment procedure.

(b) Turn the range switch to the broadcast position (fully clockwise).

(c) Connect the test oscillator output leads to the 6A7 control grid and chassis with a .1 mfd. condenser in series with the oscillator output.

(d) Set the oscillator to exactly 465 KC.

(e) Set the receiver dial at any point where it has no tuning effect on the oscillator signal.

(f) Adjust the four I.F. trimmers, Nos. 1, 2, 3 and 4, for maximum output meter deflection, then repeat the trimmer adjustment.

BROADCAST BAND CALIBRATION AND ALIGNMENT

(a) With the gang condenser in full mesh, the dial pointer should be on the horizontal line below 540 KC. on the dial scale.

(b) Turn the range switch to the clockwise position and connect the test oscillator output to the antenna lead of the receiver with a 400 ohm carbon resistor in series with the antenna lead and the oscillator output.

(c) Adjust the test oscillator to exactly 1720 KC. and turn the receiver dial pointer to 1720 KC. on the tuning dial.

(d) To calibrate the dial, adjust trimmer No. 5 for maximum output.

(e) Adjust the test oscillator to 1400 KC. and carefully tune the receiver to the signal.

(f) Adjust trimmer No. 6 for maximum output.

(g) Adjust the test oscillator to 600 KC. and tune the receiver to the signal.

(h) Adjust trimmer No. 7 for maximum output. Then try to increase the output meter reading by detuning No. 7 slightly and retuning the receiver dial. If the output goes down, detune the trimmer in the opposite direction. Continue detuning the trimmer and retuning the receiver dial until maximum output meter deflection is secured. This operation is commonly known as "rocking" and when performed as described will give maximum selectivity and sensitivity, even though the dial may be slightly off calibration at 600 KC.

(i) Check the adjustment of trimmer 5 at 1720 KC. and trimmer 6 at 1400 KC.

SHORT WAVE BAND CALIBRATION AND ALIGNMENT

(a) Turn the range switch to the short wave position (counter-clockwise).

(b) Adjust the test oscillator to exactly 6.0 MC.

(c) Tune in the 6 MC. oscillator signal at or near 6 MC. on the receiver dial to determine whether the receiver dial calibration is correct at 6 MC. If it is, do not adjust the oscillator shunt trimmer No. 8.

(d) If the calibration is incorrect, set the dial pointer to 6 MC. on the dial, and adjust the oscillator shunt trimmer No. 8, until the oscillator signal comes in at this point. If there are two peaks, the proper one is that with the trimmed screw farthest out.

(e) Carefully tune the receiver to the signal and adjust trimmer No. 9 for maximum output. Then try to increase the output by detuning No. 9 slightly and retuning the receiver dial. Continue detuning No. 9 and retuning the dial until the output meter deflection is a maximum.

PARTS LIST

Diagram Number	Part Number	DESCRIPTION	List Price
1-2	67262	500,000 ohm, ¼ watt carbon resistor	$0.12
3	67580	6,000 ohm, ¼ watt carbon resistor	.25
4-5	81155	500 mmfd. molded mica condenser	.25
6-7	88189	.05 mfd. 200 volt paper condenser	.25
8-9-10	89421	.1 mfd. 200 volt paper condenser	.25
11	89849	Grid bias cell (1 volt)	.22
12	89938	Padding trimmer (300 to 600 mmfd.)	.55
13	89939	Filter choke	.92
14-15 16-17	89940	Trimmer condenser (3 to 45 mmfd.)	.21
18	89941	Line cord (130 ohms)	1.00
19-20	89942	250,000 ohm ¼ watt carbon resistor	.19
21	89943	1 megohm ¼ watt carbon resistor	.19
22-23	89944	.005 mfd. 600 volt paper condenser	.18
24	89945	Broadcast oscillator coil	.65
25	89946	2100 mmfd. molded mica condenser	.28
26-27	89947	Dial lamp (6.3 volt 0.25 ampere)	.19
28	89948	140 ohm 1½ watt wire-wound resistor	.28
29	89949	1st I.F. transformer and shield	1.25
30	89950	2nd I.F. transformer and shield	$1.25
31A-31B	89951	Two-gang variable condenser	2.50
32A to D	89952	Range switch	.69
33A 33B	89953	Volume control (500,000 ohms) Line switch	1.00
34A 34B	89954	12 mfd. 150 volt dry elect. condenser 20 mfd. 150 volt dry elect. condenser	1.50
35	89955	Antenna coil	.85
36	89956	Short-wave oscillator coil	.85
38	89959	50,000 ohm, ¼ watt carbon resistor	.19
39-40	89960	25,000 ohm, ¼ watt carbon resistor	.19
41	89961	150 ohm, ¼ watt carbon resistor	.19
42	89962	2 mfd. 200 volt paper condenser	.23
43	89963	.05 mfd. 400 volt paper condenser	.18
44	89964	.25 mfd. 200 volt paper condenser	.24
46	89966	5" Dynamic speaker (complete)	4.75

MISCELLANEOUS AND DIAL PARTS

Part Number	DESCRIPTION	List Price
89967	Dial escutcheon less glass	$0.45
89971	Knob (small), volume control and range switch	.19
89972	Knob (large), tuning control	.18
89973	Dial assembly (complete)	.54
89974	Dial scale	.39
89975	Dial glass for escutcheon	.35

PRICES SUBJECT TO CHANGE WITHOUT NOTICE

©John F. Rider, Publisher

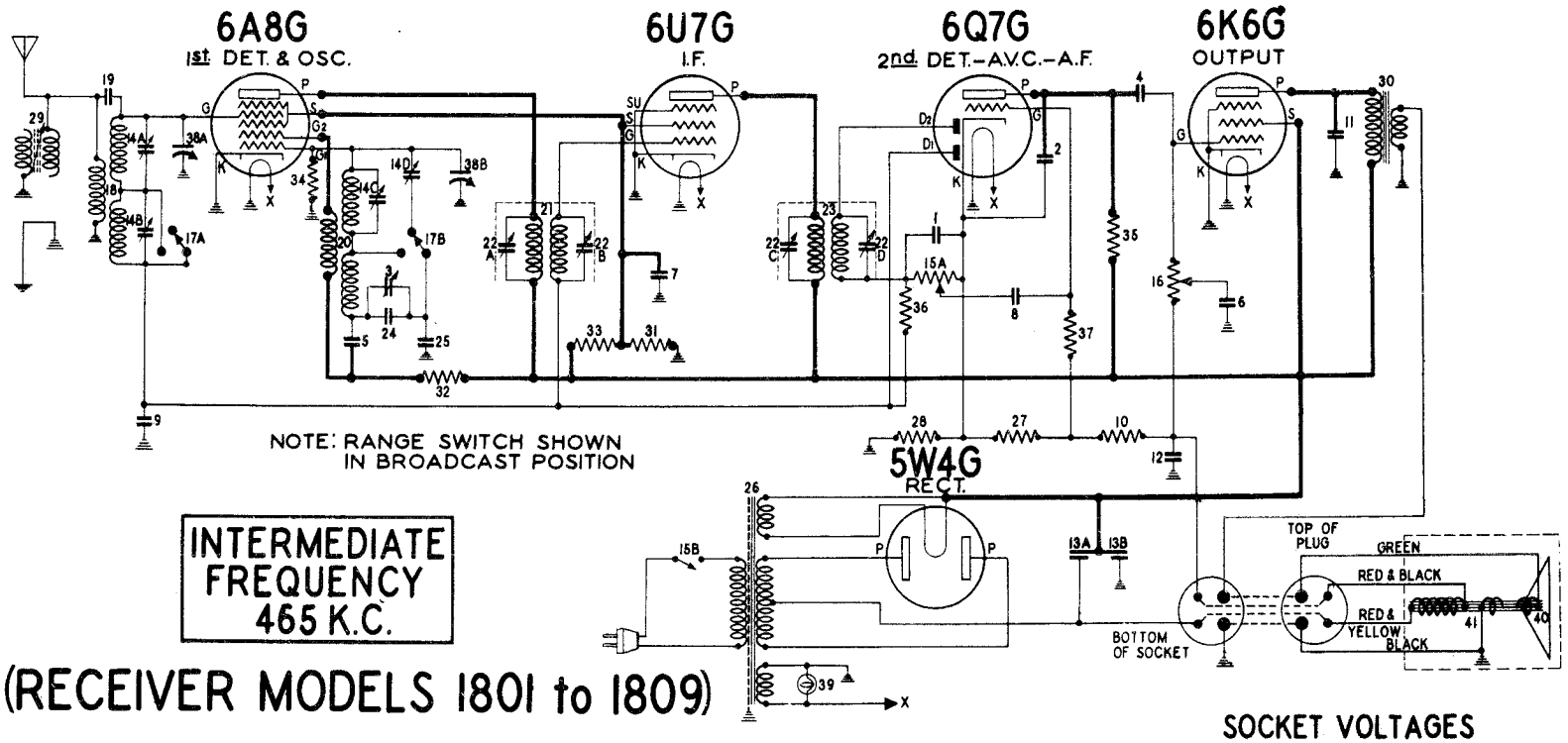

(RECEIVER MODELS 1801 to 1809)

STEWART-WARNER R-180 CHASSIS

DIAGRAM NUMBER	PART NUMBER	DESCRIPTION	LIST PRICE
1-2	83539	Condenser - mica 280 mmfd.	$ .20
3	85285	Condenser - padding	.40
4-5-6	88030	Condenser - paper .01 mfd. 400 volt	.25
7	88046	Condenser - paper .1 mfd. 150 volt	.25
8	88189	Condenser - paper .05 mfd. 200 volt	.25
9	88534	Condenser - paper .06 mfd. 150 volt	.25
10	88583	Resistor - wire wound 240 ohms 1 watt	.15
11	89826	Condenser - paper .004 mfd. 750 volts	.24
12	110377	Condenser - elect. 10 mfd. 25 volts	.80
	112113	Condenser - electrolytic 10 mfd. 50 volt (Model 180-W)	1.50
13A-13B	110497	Condenser - elect. (Sect. A-8 mfd. (Sect. B-8 mfd.	1.50
	112359	Condenser - electrolytic dual 8 mfd. (Model 180-W)	1.50
14A to D	110498	Condenser - trimmer strip	.75
15A-15B	110503	Volume control - 1 meg. with off-on sw.	1.25
16	110504	Tone control - 500,000 ohms	.95
17A-17B	110505	Switch - range	.90
18	110508	Coil - antenna	1.15
19	110510	Condenser - wire 3 mmfd.	.12
20	110512	Coil - oscillator	.85
21	110514	Transformer - 1st I.F.	2.00
22A to D	110516	Condenser - trimmer strip(for I.F.trans.)	.58
23	110520	Transformer - 2nd I.F.	2.00
24	111127	Condenser - mica 520 mmfd. (3%)	.24
25	110523	Condenser - mica 1,980 mmfd. (3%)	.32
26	110524	Transformer - power 115 volt 60 cycle	$4.20
	111956	Transformer - power 115 volt 25 cycle (Model 180-B)	7.00
	112022	Transformer - power 105-250 volt 50-133 cycle (Model 180-W)	7.75
27	110534	Resistor - wire wound 40 ohm 1/2 watt	.12
28	110535	Resistor - wire wound 75 ohm 1/2 watt	.12
29	110536	Coil - wave trap	1.02
30	110537	Transformer - output (Model 180A-180B)	1.50
	112100	Transformer - output (Model 180-W)	1.25
31	110571	Resistor - carbon 12,000 ohm 1/2 watt	.15
32	110550	Resistor - carbon 10,000 ohm 1/2 watt	.15
33	110551	Resistor - carbon 15,000 ohm 1 watt	.12
34	110552	Resistor - carbon 47,000 ohm 1/4 watt	.12
35	110553	Resistor - carbon 220,000 ohm 1/4 watt	.12
36-37	110554	Resistor - carbon 1 megohm 1/4 watt	.12
38A-38B	110600	Condenser - variable gang	3.50
39	110629	Lamp - pilot, 6.3 volt - .25 amp.	.22
40	110932	Cone - and voice coil assembly (for 275-A speaker)(Model 1801)	1.70
	110944	Cone - voice coil assembly (for R-278-A speaker)(Model 1803-1805)	1.60
	110946	Cone - and voice coil assembly (for R-285-A speaker)(Model 1802)	1.90
41	R-275-A	Speaker - dynamic (5 inch)(Model 1801)	6.50
	R-278-A	Speaker - dynamic (8 inch)-(1803-1805)	8.50
	R-285-A	Speaker - dynamic (8 inch)(Model 1802)	9.00

PRICES SUBJECT TO CHANGE WITHOUT NOTICE

SOCKET VOLTAGES

ANTENNA GROUNDED — DIAL TUNED TO 530 KC.

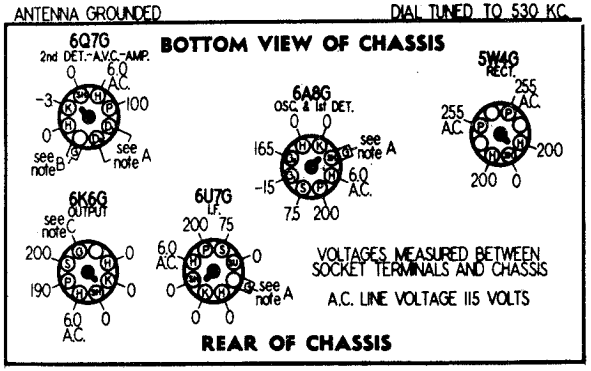

IMPORTANT: Use a high resistance voltmeter of 1,000 ohms per volt.

NOTE A: The bias for the control grids of the 6A8-G, 6U7-G and the diode plates of the 6Q7-G is -3 volts measured across resistor 28.

NOTE B: The bias for the control grid of the 6Q7-G triode section is -5 volts measured across resistors 27 and 28.

NOTE C: The bias for the control grid of the 6K6-G tube is -14 volts measured across resistors 10, 27 and 28.

MODELS 1801-1809 incl.
Chassis R-180
Alignment, Trimmers
Parts

STEWART-WARNER CORP.

MODEL R-180 CHASSIS (RECEIVER MODELS 1801 to 1809)

The Model R-180 chassis is a five tube, two band superheterodyne receiver. It has an intermediate frequency of 465 KC. and tuning ranges of 525 to 1750 KC. and 2200 to 7000 KC.

REMEDY FOR SLIPPING DIAL MECHANISM.

Slipping of the dial mechanism may be due to binding of the pointer hub against the hole in the dial scale. To remedy, remove the pointer by twisting it, then center the dial scale hole around the pointer shaft by moving the dial scale.

ALIGNMENT EQUIPMENT & PROCEDURE

For alignment, an output meter and an accurately calibrated signal generator with a tuning range from 465 KC. to 6.0 MC. are required.

IMPORTANT: THE BROADCAST BAND MUST BE ALIGNED AFTER THE SHORT-WAVE BAND.

1. Connect the output meter across the voice coil or between the plate of the 6K6G tube and ground, depending on the type of meter. (The more sensitive type should be connected across the voice coil.)
2. Connect the ground lead of the signal generator to the chassis of the receiver.
3. Turn the volume control to the maximum volume position and keep it in this position throughout the entire alignment procedure.
4. With the gang condenser in full mesh set the pointer on the horizontal black line below 530 KC, on the dial.
5. Using a bakelite screw driver proceed to align in exactly the same order as shown in the table below.

DUMMY ANT. IN SERIES WITH SIG. GEN.	CONNECTION OF SIG. GENERATOR OUTPUT TO RECEIVER	SIGNAL GENERATOR FREQUENCY	RANGE SWITCH POSITION	RECEIVER DIAL SETTING	TRIMMER NUMBER	TRIMMER DESCRIPTION	TYPE OF ADJUSTMENT
.1 MFD. CONDENSER.	CONTROL GRID OF 6A8G TUBE (Do not remove grid clip)	465 KC.	BROADCAST (Clockwise)	ANY POINT WHERE IT DOES NOT AFFECT THE SIGNAL	1-2	1ST I.F.	ADJUST FOR MAXIMUM OUTPUT. THEN REPEAT ADJUSTMENT.
					3-4	2ND I.F.	
400 OHM CARBON RESISTOR	ANTENNA LEAD	465 KC.	BROADCAST Clockwise	ANY POINT WHERE IT DOES NOT AFFECT THE SIGNAL	5	WAVE TRAP	ADJUST FOR MINIMUM OUTPUT USING STRONG GENERATOR SIGNAL.
400 OHM CARBON RESISTOR	ANTENNA LEAD	6.0 MC.	SHORT-WAVE Counter-clockwise	6.0 MC.	6	SHORT-WAVE OSCILLATOR	ADJUST TO SIGNAL. CHECK TO SEE IF PROPER PEAK WAS OBTAINED BY TUNING IN IMAGE AT APPROX. 5.1 MC. IF IMAGE DOES NOT APPEAR REALIGN AT 6.0 MC. WITH TRIMMER SCREW FARTHER OUT.
400 OHM CARBON RESISTOR	ANTENNA LEAD	6.0 MC.	SHORT-WAVE Counter-clockwise	TUNE TO 6.0 MC. GENERATOR SIGNAL	7	SHORT-WAVE ANTENNA	ADJUST FOR MAXIMUM OUTPUT. TRY TO INCREASE OUTPUT BY DETUNING TRIMMER AND RETUNING RECEIVER DIAL UNTIL MAXIMUM OUTPUT IS OBTAINED.
400 OHM CARBON RESISTOR	ANTENNA LEAD	1500 KC.	BROADCAST Clockwise	1500 KC.	8	BROADCAST OSCILLATOR (Shunt)	ADJUST TRIMMER TO BRING IN SIGNAL.
400 OHM CARBON RESISTOR	ANTENNA LEAD	1500 KC.	BROADCAST (Clockwise)	TUNE TO 1500 KC. GEN.SIG.	9	BROADCAST ANTENNA	ADJUST FOR MAXIMUM OUTPUT.
400 OHM CARBON RESISTOR	ANTENNA LEAD	600 KC.	BROADCAST (Clockwise)	TUNE TO 600 KC. GENERATOR SIGNAL	10	BROADCAST OSCILLATOR Series Pad	ADJUST FOR MAXIMUM OUTPUT. TRY TO INCREASE OUTPUT BY DETUNING TRIMMER AND RETUNING RECEIVER DIAL UNTIL MAXIMUM OUTPUT IS OBTAINED.

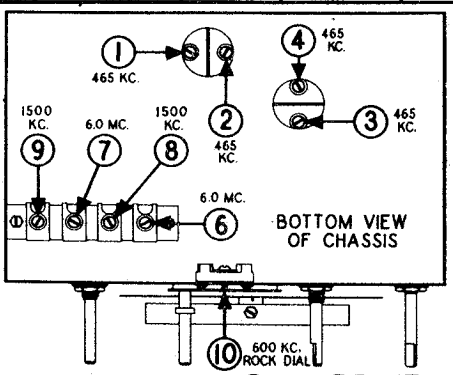

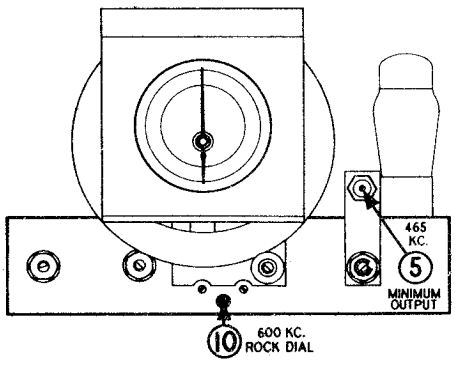

DIAL DRIVE & MISCELLANEOUS PARTS

PART NUMBER	DESCRIPTION	LIST PRICE
83552	Bolt - chassis mounting (#10x7/8")	$ .03
110507	Bracket - for mtg. electrolytic condenser	.05
110601	Bracket - for dial & pilot light mounting	.07
110486	Clamp - for mounting 5 inch speaker	.05
110487	Clamp - for mounting 8 inch speaker	.06
89912	Clip - grounding, for tube base	.02
110612	Disc - dial drive	.09
110650	Escutcheon - with celluloid window	2.00
111125	Knob - for all controls	.18
112126	Knob - all controls (Model 1803)	.18
12349	Nut - 8-32 for speaker mounting - Per C	.45
110496	Plug - speaker (4 prong)	.12
110622	Pointer - dial	.17
110615	Reflector - for dial & support plate	.25
110611	Retaining ring - for drive shaft	.02
110621	Scale - dial	1.00
110674	Screw - escutcheon mounting (#2x3/8")	.02
88822	Screw - ornamental head 8-32 (speaker mtg.)	$ .02
85040	Screw - self tapping (6x1/4") - Per C	.25
83624	Screw - self tapping (8x1/4")	.01
110606	Shaft - drive; and disc assembly	.16
88161	Shield - tube (short section)	.08
88164	Shield cap - tube, grid type	.06
89911	Shield - tube, base	.04
85427	Socket - octal base	.15
110626	Socket - pilot light	.22
110501	Socket - speaker (4 prong)	.16
84015	Washer - felt, for back of knobs	.01
77223	Washer - speaker mounting	.01
110610	Washer - spring for drive shaft	.02
67590	Washer - steel; chassis mounting	.01
110613	Washer - flat for dial drive	.01
110614	Washer - spring, dial drive disc retaining	.03

FORM NO. 8491 10-27-37 PRINTED IN U.S.A.

PRICES ARE SUBJECT TO CHANGE WITHOUT NOTICE

©John F. Rider, Publisher

Chassis R-181W
Phono.Schematic
Chassis R-181A,R-181B Data

STEWART-WARNER CORP.

MODELS 1811-1819 incl.
Chassis R-181
Schematic,Socket,Voltage
Parts

STEWART-WARNER R-181 CHASSIS

(RECEIVER MODELS 1811 to 1819)

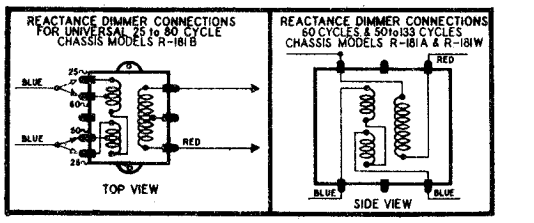

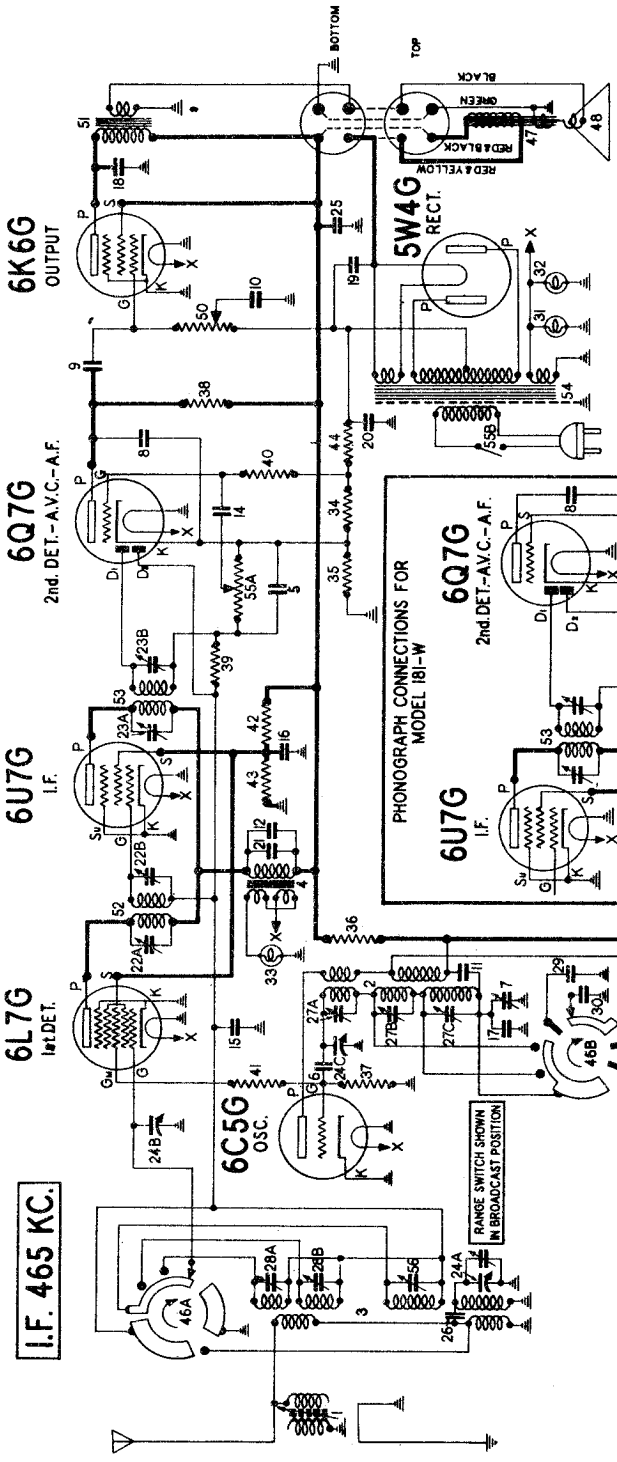

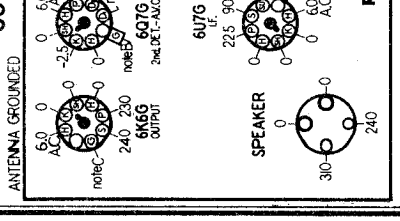

DIAGRAM NUMBER	PART NUMBER	DESCRIPTION	LIST PRICE
24A to C-	110743	Condenser - variable gang	4.50
25----	110768	Condenser - elect. 8 mfd. 450 volt	1.25
25----	112108	Condenser - electrolytic 8 mfd. 450 volt (Model 181-W only)	1.30
26-----	110850	Condenser - wire 7 mmf.	.18
27A to C-	110859	Condenser - trimmer (3 section for osc. coil)	.65
28A to B-	110882	Condenser - trimmer (2 section for ant. coil)	.44
29-----	110906	Condenser - mica .00332 mfd.(3%)	.40
30-----	110907	Condenser - mica 980 mmfd. (3%)	.30
31-32----	110629	Lamp - dial: 6.3 volt - .25 amps	.15
33-----	110911	Lamp - dim. reactor 2.5 V. .5 amp.	.15
34------	88465	Resistor - wire wd. 25 ohm ½ watt	.15
35-----	110534	Resistor - wire wd. 40 ohm ½ watt	.12
36-----	110550	Resistor - carbon 10000 ohm ½ watt	.15
37-----	110552	Resistor - carbon 47,000 ohm ½ watt	.12
38-----	110553	Resistor - carbon 220,000 ohm ½ W.	.12
39-40----	110554	Resistor - carbon 1 megohm ½ watt	.12
41-----	110560	Resistor - carbon 100 ohm ½ watt	.12
42-----	110561	Resistor - carbon 15,000 ohm 2 W.	.30
43-----	110562	Resistor - carbon 22,000 ohm ½ W.	.12
44-----	110872	Resistor - wire wd. 160 ohm 1 watt	.12
45A to B-	84404	Switch - phono toggle(model 181-W)	1.10
46A to B-	110856	Switch - range	1.20
47---	R-276-A	Speaker -dyn. 6"(models 1812-1811)	6.00
	R-279-A	Speaker - dynamic 10" (model 1815)	8.00
48---	110942	Cone - Spkr. & voice coil assem. for R-276 spkr.)	1.20
	110945	Cone - and voice coil assem. (for R-279-A spkr.)	1.80
49------	89709	Terminal strip - phono(model 181W)	.15
50-----	110767	Tone control - (500,000 ohm)	.80
51----	110789	Transformer - output (model 181-A or 181-B)	1.65
	112105	Transformer - output (Model 181-W)	1.65
52-----	110851	Transformer - 1st I.F.	1.85
53-----	110853	Transformer - 2nd I.F.	1.65
54----	110862	Transformer - power (115 V. 60 C)	5.00
	112076	Transformer - power (115 V. 25 C)	7.50
	112119	Transformer-Power 100-240 V. 50-133	7.75
55A to B-	110786	Volume control - 1 megohm (with on-off switch)	.90
56-----	110864	Condenser - trimmer (single section for antenna coil)	.24
1------	110536	Coil - antenna trap	$1.02
2------	110860	Coil - Osc. (Less trimmers)	1.40
3-----	110881	Coil - assembly (antenna & preselector) with trimmer	3.00
4-----	110786	Coil - dimmer reactor (60 cycle)	2.25
	110996	Coil - reactance dimmer (25 to 80 cycle) (Model 181-B only)	3.00
	112152	Coil - reactance dimmer (for 181-W only)(50 to 133 cycle)	2.50
5-------	83539	Condenser - mica 260 mmfd.	.20
6-------	85061	Condenser - mica 51 mmfd.	.15
7-------	85285	Condenser - padding	.40
8-------	85394	Condenser - mica 510 mmf.	.25
9-------	88026	Condenser - paper .02 mfd.-400 V.	.25
10-11----	88030	Condenser - paper .01 mfd.-400 V.	.25
12-13----	88046	Condenser - paper .1 mfd. 150 V.	.25
14------	88189	Condenser - paper .05 mfd.-200 V.	.25
15------	88534	Condenser - paper .05 mfd.-150 V.	.25
16------	89421	Condenser - paper .1 mfd.-200 V.	.25
17------	89564	Condenser - mica 345 mmfd. (3%)	.40
18----	89826	Condenser - paper .004 mfd. - 750 volt (used in early production	.24
	111214	Condenser - paper .01 mfd. 600 volt (used in late production	.24
19------	89937	Condenser - elect. 30 mfd.-450 V.	1.60
20-21---	110377	Condenser - elect. 10 mfd.-25 volt	.80
	112113	Condenser - elect. 10 mfd. 50 volt (for model 181-W only)	.85
22A to B	110516	Condenser - trimmer strip (for I.F. transformer)	.58
23A to B			

IMPORTANT: Use a high resistance voltmeter of 1,000 ohms per volt.

NOTE A: The bias for the control grids of the 6L7G, 6U7G, and the diode plates of the 6Q7G is -2.5 volts measured across resistor number 36.

NOTE B: The bias for the control grid of the 6Q7G is -4 volts measured across resistors 34 and 35.

NOTE C: The bias for the control grid of the 6K6G output tube is -16 volts measured across resistors 34, 35, and 44.

PRICES ARE SUBJECT TO CHANGE WITHOUT NOTICE

©John F. Rider, Publisher

MODELS 1811-1819 incl.
Chassis R-181
Alignment, Trimmers, Parts
Dial Data

STEWART-WARNER CORP.

MODEL R-181 CHASSIS (RECEIVER MODELS 1811 to 1819)

ALIGNMENT EQUIPMENT & PROCEDURE

For alignment, an output meter and an accurately calibrated signal generator with a tuning range from 465 KC. to 8.0 MC. are required.

① Connect the output meter across the voice coil or between the plate of the 6K6G tube and ground, depending on the type of meter. (The more sensitive type should be connected across the voice coil.)

② Connect the ground lead of the signal generator to the chassis of the receiver.

③ Turn the volume control to the maximum volume position and keep it in this position throughout the entire alignment procedure.

④ With the gang condenser in full mesh set the pointer on the last scale division on the low frequency end of the dial. This may be accomplished by releasing the clip on the pointer slider; where it attaches to the dial cord.

IMPORTANT:—THE BROADCAST BAND MUST BE ALIGNED AFTER THE SHORT-WAVE BAND.

DUMMY ANT. IN SERIES WITH SIG. GEN.	CONNECTION OF SIG. GENERATOR OUTPUT TO RECEIVER	SIGNAL GENERATOR FREQUENCY	RANGE SWITCH POSITION	RECEIVER DIAL SETTING	TRIMMER NUMBER	TRIMMER DESCRIPTION	TYPE OF ADJUSTMENT
.1 MFD CONDENSER	CONTROL GRID OF 6L7G TUBE	465 KC.	BROADCAST (Clockwise)	ANY POINT WHERE IT DOES NOT AFFECT THE SIGNAL	1 - 2 3 - 4	1ST I.F. 2ND I.F.	ADJUST FOR MAXIUM OUTPUT. THEN REPEAT ADJUSTMENT.
400 OHM CARBON RESISTOR	ANTENNA TERMINAL	465 KC.	BROADCAST (Clockwise)	ANY POINT WHERE IT DOES NOT AFFECT THE SIGNAL	5	WAVE TRAP	ADJUST FOR MINIMUM OUTPUT USING A STRONG GENERATOR SIGNAL.
400 OHM CARBON RESISTOR	ANTENNA TERMINAL	16 MC.	SHORT-WAVE (Counter-clockwise)	16 MC.	6	SHORT-WAVE OSCILLATOR	ADJUST TO BRING IN SIGNAL. CHECK TO SEE IF PROPER PEAK WAS OBTAINED BY TUNING IN IMAGE AT APPROX. 15.1 KC. IF IMAGE DOES NOT APPEAR REALIGN AT 16 MC. WITH TRIMMER SCREW FARTHER OUT. RECHECK IMAGE.
400 OHM CARBON RESISTOR	ANTENNA TERMINAL	16 MC.	SHORT-WAVE (Counter-clockwise)	TUNE TO 16 MC. GENERATOR SIGNAL	7	SHORT-WAVE ANTENNA	ADJUST FOR MAXIMUM OUTPUT. TRY TO INCREASE OUTPUT BY DETUNING TRIMMER AND RETUNING RECEIVER DIAL UNTIL MAXIMUM OUTPUT IS OBTAINED.
400 OHM CARBON RESISTOR	ANTENNA TERMINAL	5.0 MC.	POLICE (Center)	5.0 MC.	8	POLICE OSCILLATOR	ADJUST TO BRING IN SIGNAL. CHECK TO SEE IF PROPER PEAK WAS OBTAINED BY TUNING IN IMAGE AT APPROX. 4.1 MC. IF IMAGE DOES NOT APPEAR REALIGN AT 5.0 MC. WITH TRIMMER SCREW FARTHER OUT. RECHECK IMAGE
400 OHM CARBON RESISTOR	ANTENNA TERMINAL	5.0 MC.	POLICE (Center)	TUNE TO 5.0 MC. GENERATOR SIGNAL	9	POLICE ANTENNA	ADJUST FOR MAXIMUM OUTPUT. TRY TO INCREASE OUTPUT BY DETUNING TRIMMER AND RETUNING RECEIVER DIAL UNTIL MAXIMUM OUTPUT IS OBTAINED.
400 OHM CARBON RESISTOR	ANTENNA TERMINAL	1500 KC.	BROADCAST (Clockwise)	1500 KC.	10	BROADCAST OSCILLATOR (Shunt)	ADJUST TRIMMER TO BRING IN SIGNAL.
400 OHM CARBON RESISTOR	ANTENNA TERMINAL	1500 KC.	BROADCAST (Clockwise)	TUNE TO 1500 KC. GEN.SIG.	11 12	ANTENNA DETECTOR	ADJUST FOR MAXIMUM OUTPUT.
400 OHM CARBON RESISTOR	ANTENNA TERMINAL	600 KC.	BROADCAST (Clockwise)	TUNE TO 600 KC. GENERATOR SIGNAL	13	BROADCAST OSCILLATOR (Series Pad)	ADJUST FOR MAXIMUM OUTPUT. TRY TO INCREASE OUTPUT BY DETUNING TRIMMER AND RETUNING RECEIVER DIAL UNTIL MAXIMUM OUTPUT IS OBTAINED.

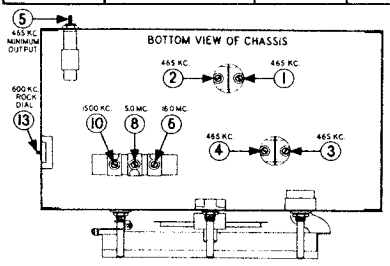

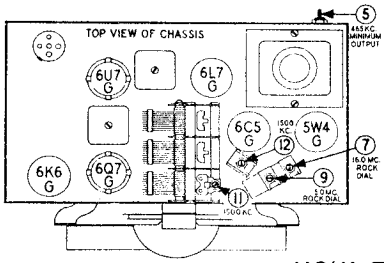

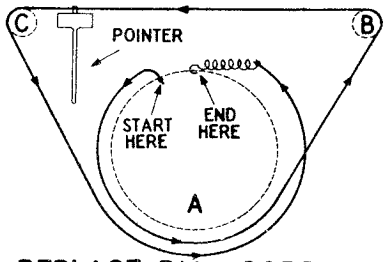

DIAL DRIVE & MISCELLANEOUS PARTS

PART NUMBER	DESCRIPTION	LIST PRICE
110712--------	Band Indicator - assembly----------	$ .35
110693--------	Bracket - dial assembly (right hand)--------	.25
110694--------	Bracket - dial assembly (left hand)--------	.25
88810---------	Bushing - rubber for chassis mtg.----------	.03
89912---------	Clip - tube grounding----------	.02
81068---------	Cord - dial drive (35" lengths)------Per Ft.	.05
110782--------	Cord - for band indicator (2 ft.)----------	.10
110715--------	Drive shaft - bracket & indicator assem.---	1.00
110690--------	Drum - and disc assembly----------	.48
111030--------	Escutcheon - & glass window(model 1815&1811)	1.30
111850--------	Escutcheon - & glass window(model R-1812-A)	1.75
110707--------	Frame - dial, with scale complete----------	1.70
110679--------	Knob - (model 1815 all controls)(model 1811 tuning control only)----------	.20
111254--------	Knob - tuning (model 1812 only)----------	.25
111255--------	Knob - tone,volume & range(model 1812 only)	.25
111125--------	Knob - tone,volume & range(model 1811 only)	.18
110784--------	Lever - assembly for band indicator--------	.12
110496--------	Plug - speaker (4 prong)----------	.12
36437---------	Pin - escutcheon mtg. (no. 18 X 5/16")Per C	.10
110785--------	Pointer - dial----------	.14
110711--------	Scale - dial----------	.85
67449---------	Screw - 8X3/8" self tapping(for dial brkts)	.03
110716--------	Screw - band indicator pivot----------	.03
110835--------	Screw - #10 x 1 for chassis mtg.----------	.03
88161---------	Shield - tube, short section----------	.08
88162---------	Shield - tube, long section----------	.08

HOW TO REPLACE DIAL CORD

Before attempting to replace the dial cord, fully mesh the gang condenser. The holes in drum A should be in the top position as shown in the diagram above.

The pointer drive cord should be 33 inches or more in length. Place one end of the cord through the left hole in drum; then knot the end. Run the free end of the cord down around the drum and up to pulley B. Continue over pulley B to pulley C, then down to drum A. Bring the cord up around drum D. Tie the cord to the end of the tension spring so that the spring will be extended to about 1-1/8 inches, when hooked to the slot in the drum. Now place the pointer on its track so that it points to the last scale division on the low frequency end of the dial, then clip it to the cord.

PART NUMBER	DESCRIPTION	LIST PRICE
88164---------	Shield - tube cap----------	.06
89911---------	Shield - tube base----------	.04
85427---------	Socket - octal base----------	.15
110501--------	Socket - 4 prong (for spkr.)----------	.16
110627--------	Socket - dial lamp----------	.12
110910--------	Socket - assembly for dimmer light----------	.25
110817--------	Speed nut - retainer for escu. to cabinet--	.01
81068---------	Spring - for tightening drive rope----------	.10
110719--------	Spring - for band indicator----------	.05
55785---------	Terminal strip - (G.-A.)----------	.15
37568---------	Washer - embossed (for mtg. 89937 elect.)--	.05
89746---------	Washer - (paper) for back of knobs----------	.005
110829--------	Washer - flat steel, for mtg. chassis------	.01

FORM NO. 5492 PRINTED IN USA

©John F. Rider, Publisher

Parts
Chassis R-182W Phono.
Chassis R182A, R182B Data

STEWART-WARNER CORP.

MODELS 1821-1829 incl.
Chassis R-182
Schematic, Socket, Voltage

R-182 CHASSIS
MODELS 1821 to 1829

IMPORTANT: Use a high resistance voltmeter of 1000 ohms per volt.

NOTE A: The bias for the control grids of the 6L7G, 6U7G, and the diode plates of the 6H6G is -2.5 volts measured across resistor no. 37.

NOTE B: The bias for the control grid of the 6V6G is -12.5 volts measured across resistors number 37 and 48.

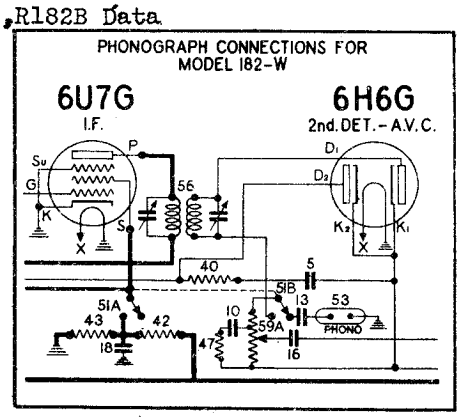

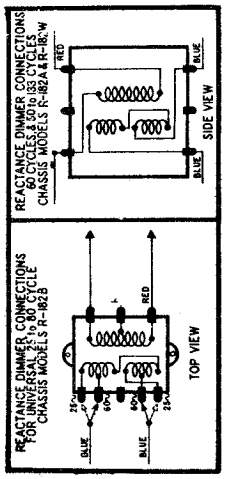

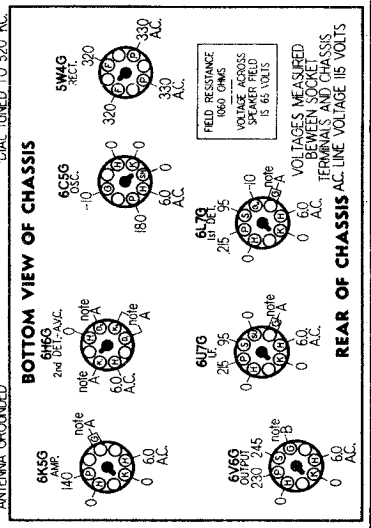

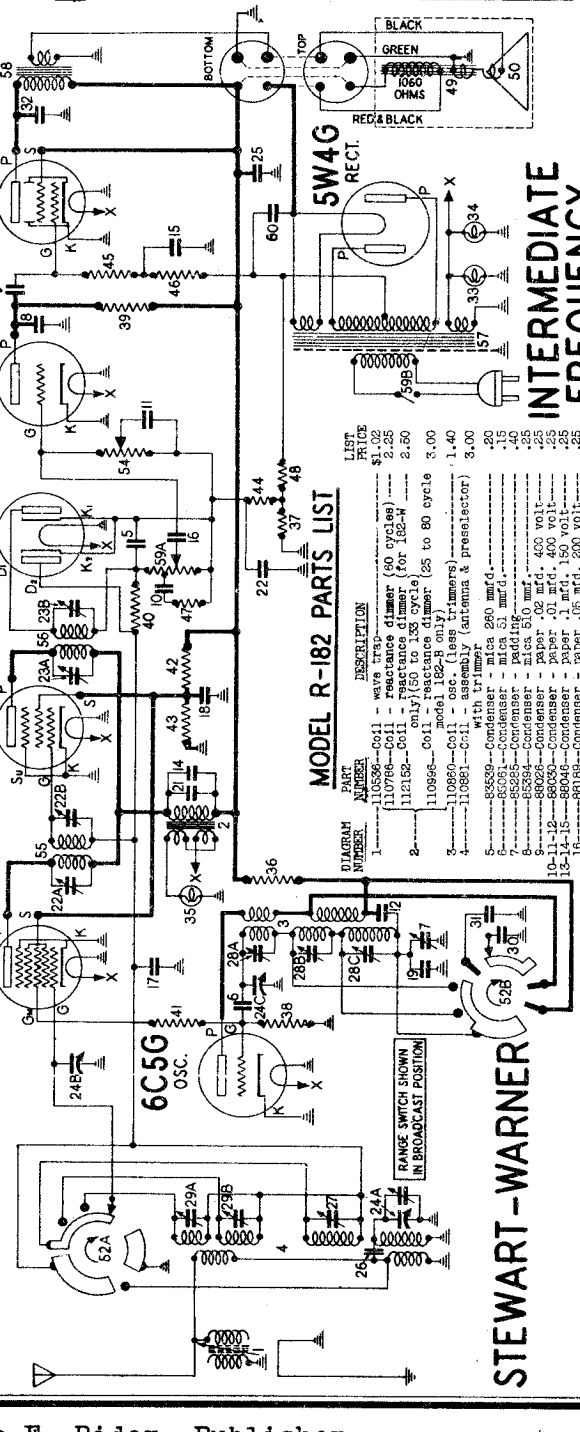

MODEL R-182 PARTS LIST

DIAGRAM NUMBER	PART NUMBER	DESCRIPTION	LIST PRICE
1	110536	Coil - wave trap	$1.02
	110768	Coil - reactance dimmer (for 182-W only)(50 to 133 cycle)	2.25
	112152	Coil - reactance dimmer (25 to 80 cycle only)	2.60
2	110966	Coil - osc. (less trimmers)	3.00
3	110850	Coil - osc. (antenna & preselector) model 182-B only)	1.40
4	110861	Coil - assembly (antenna & preselector) with trimmer	3.00
5	85589	Condenser - mica 260 mmfd.	.20
6	85591	Condenser - mica 1 mmfd.	.45
7	85284	Condenser - mica 510 mmf.	.25
8	80026	Condenser - paper .02 mfd. 400 volt	.25
9	88030	Condenser - paper .01 mfd. 400 volt	.25
10-11-12	88046	Condenser - paper 1 mfd. 150 volt	.25
13-14-15	88189	Condenser - paper .05 mfd. 200 volt	.25
16	86534	Condenser - paper .05 mfd. 150 volt	.25
17	89421	Condenser - paper .1 mfd. 200 volt	.25
18	88054	Condenser - mica 345 mmfd. 450 volt	.30
19	88059	Condenser - elect. 30 mfd. 450 volt	1.30
60	110977	Condenser - elect. 10 mfd. 25 volt	.80
	112115	Condenser - electrolytic 10 mfd. 50 volt (for model 182-W only)	.85
20-21	110516	Condenser - trimmer strip (for I. F. transformer	.56
22A - 22B	110743	Condenser - variable gang	4.50
23A - 23B	110768	Condenser - elect. 8 mfd. 450 volt	1.25
24A to C	112108	Condenser - electrolytic 8 mfd. 450 volt (model 182-W only)	1.30
25			

DIAGRAM NUMBER	PART NUMBER	DESCRIPTION	LIST PRICE
26	110850	Condenser - wire 7 mmf.	.18
27	110854	Condenser - trimmer (single section for antenna coil)	.24
28A to C	110859	Condenser - trimmer (3 section for oscillator coil)	.65
29A - 29B	110882	Condenser - trimmer (2 section for antenna coil)	.44
30	110906	Condenser - mica .00332 mfd. (3%)	.40
31	110907	Condenser - mica 980 mmfd. (3%)	.30
32	89826	Condenser - paper .004 mfd. 750 volt (used in early production)	.24
	111214	Condenser - paper .01 mfd. 600 volt (used in late production)	.24
33-34	110629	Lamp - dial 6.3 volt - .25 amps.	.15
35	110911	Lamp - dimmer reactor 2.5 Volt .5 amp.	.15
36	110550	Resistor - carbon 10,000 ohms 1/2 watt	.15
37	110534	Resistor - wire wound 40 ohm 1/2 watt	.12
38	110552	Resistor - carbon 47,000 ohm 1/4 watt	.12
39	110553	Resistor - carbon 220,000 ohm 1/4 watt	.12
40	110554	Resistor - carbon 1 megohm - 1/4 watt	.12
41	110560	Resistor - carbon 100 ohm 1/4 watt	.12
42	110561	Resistor - carbon 15,000 ohm 2 watt	.30
43	110562	Resistor - carbon 22,000 ohm 1/2 watt	.15
44-45	110564	Resistor - carbon 100,000 ohm 1/4 watt	.12
46	110565	Resistor - carbon 22,000 ohm 1/4 watt	.12
47	110566	Resistor - carbon 33,000 ohm 1/4 watt	.12
48	110928	Resistor - wire wound 150 ohms 1 watt	.12
49	R-277-A	Speaker - dynamic 8 inch-(MODEL 1821)	7.50
	R-280-A	Speaker - dynamic 10 inch (MODEL 1825)	9.00
50	110943	Cone - voice coil assem. for R-277-A spkr. (Do not place gasket between cone and frame)	1.70
	110945	Cone - voice coil assem.(For R-280-A speaker)	1.80
51A - 51B	84404	Switch - phono toggle	1.10
52A - 52B	110856	Switch - range	1.20
53	89709	Terminal Strip - phono	.15
54	110787	Tone Control - (500,000 ohm)	.80
55	110651	Transformer - 1st I. F.	1.85
56	110853	Transformer - 2nd I. F.	1.65
57	110862	Transformer - power (115 volt 60 cycle)	5.00
	112076	Transformer - power (115 volt 25 cycle)	7.50
	112119	Transformer - power (100-240 volt)(50-133 cycle)	7.75
58	110925	Transformer - output(Model 181A or 181B)	1.75
	112154	Transformer - output (Model R-181-W)	1.70
59A - 59B	110927	Vol. Cont. - 1 meg. (with on-off switch)	1.25

PRICES SUBJECT TO CHANGE WITHOUT NOTICE

DIAL DRIVE & MISCELLANEOUS PARTS

PART NUMBER	DESCRIPTION	LIST PRICE
110712	Band Indicator - assembly	$ .35
110683	Bracket - dial support (R.H.)	.25
110694	Bracket - dial support (L.H.)	.25
110487	Clamp - for mtg. 8 inch speaker	.06
89912	Clip - grounding, for tube base	.02
81066	Cord - dial drive (36" lengths)	.05
110762	Cord - for band indicator (2 Ft.)	.10
110690	Drum - and disc assembly	.48
111030	Escutcheon - with glass window	1.30
110707	Frame - dial, with scale complete	1.70
110879	Knob - tuning (Model 1821); all controls (Model 1825)	.20
111125	Knob - tone, vol. & range (Model 1821 only)	.18
110784	Lever - assembly for band indicator	.12
12549	Nut - 8-32 for speaker mtg.	.45
86437	Pin - escutcheon mtg.(No. 18 x 5/16")	.10
110496	Plug - speaker (4 prong)	.12
110785	Pointer - dial	.14
110711	Scale - dial	.65
67449	Screw - 8x3/8 Self tapping(for dial brkts)	.03
110716	Screw - band indicator pivot	.03
110830	Screw - #10 x 1 for chassis mtg.	.03
85827	Set Screw - 8/32 (squarehead)	.04
110715	Shaft - dial drive (brkt. & indic. assem.)	1.00
88161	Shield - tube (short section)	.08
88162	Shield - tube (long section)	.08
88184	Shield Cap - tube, grid type	.06
89911	Shield - tube, base	.04
85427	Socket - octal base	.15
110501	Socket - 4 prong (for speaker)	.16
110827	Socket - dial lamp & dimmer lamp	.12
110817	Speed Nut - retainer for escu. to cabinet	.01
81069	Spring - for tightening drive rope	.10
110719	Spring - for band indicator	.05
85785	Terminal strip (G.-A.)	.15
87568	Washer - embossed (for mtg. 89937 elect.)	.05
77223	Washer - speaker mtg.	.01
89746	Washer - (paper) for back of knobs)	.005
110829	Washer - flat steel, for mtg. chassis	.01

©John F. Rider, Publisher

MODELS 1821-1829 incl.
Chassis R-182
Alignment, Trimmers
Dial Data

STEWART-WARNER CORP.

MODEL R-182 CHASSIS
(RECEIVER MODELS 1821 to 1829)

ALIGNMENT EQUIPMENT & PROCEDURE

For alignment, an output meter and an accurately calibrated signal generator with a tuning range from 465 KC. to 18 MC. are required.

1. Connect the output meter across the voice coil or between the plate of the 6V6G tube and ground, depending on the type of meter. (The more sensitive type should be connected across the voice coil.)
2. Connect the ground lead of the signal generator to the chassis of the receiver.
3. Turn the volume control to the maximum volume position and keep it in this position throughout the entire alignment procedure.
4. With the gang condenser in full mesh set the pointer on the last scale division on the low frequency end of the dial. This may be accomplished by releasing the clip on the pointer slider; where it attaches to the dial cord.

IMPORTANT:—THE BROADCAST BAND MUST BE ALIGNED AFTER THE SHORT-WAVE BAND AND POLICE BAND.

DUMMY ANT. IN SERIES WITH SIG. GEN.	CONNECTION OF SIG. GENERATOR OUTPUT TO RECEIVER	SIGNAL GENERATOR FREQUENCY	RANGE SWITCH POSITION	RECEIVER DIAL SETTING	TRIMMER NUMBER	TRIMMER DESCRIPTION	TYPE OF ADJUSTMENT
.1 MFD CONDENSER	CONTROL GRID OF 6L7G TUBE	465 KC.	BROADCAST (Clockwise)	ANY POINT WHERE IT DOES NOT AFFECT THE SIGNAL	1 - 2	1ST I.F.	ADJUST FOR MAXIUM OUTPUT. THEN REPEAT AD JUSTMENT.
					3 - 4	2ND I.F.	
400 OHM CARBON RESISTOR	ANTENNA TERMINAL	465 KC.	BROADCAST (Clockwise)	ANY POINT WHERE IT DOES NOT AFFECT THE SIGNAL	5	WAVE TRAP	ADJUST FOR MINIMUM OUTPUT USING A STRONG GENERATOR SIGNAL.
400 OHM CARBON RESISTOR	ANTENNA TERMINAL	16 MC.	SHORT-WAVE (Counter-clockwise)	16 MC.	6	SHORT-WAVE OSCILLATOR	ADJUST TO BRING IN SIGNAL. CHECK TO SEE IF PROPER PEAK WAS OBTAINED BY TUNING IN IMAGE AT APPROX. 15.1 KC. IF IMAGE DOES NOT APPEAR REALIGN AT 16 MC. WITH TRIMMER SCREW FARTHER OUT. RECHECK IMAGE.
400 OHM CARBON RESISTOR	ANTENNA TERMINAL	16 MC.	SHORT-WAVE (Counter-clockwise)	TUNE TO 16 MC. GENERATOR SIGNAL	7	SHORT-WAVE ANTENNA	ADJUST FOR MAXIMUM OUTPUT. TRY TO INCREASE OUTPUT BY DETUNING TRIMMER AND RETUNING RECEIVER DIAL UNTIL MAXIMUM OUTPUT IS OBTAINED.
400 OHM CARBON RESISTOR	ANTENNA TERMINAL	5.0 MC.	POLICE (Center)	5.0 MC.	8	POLICE OSCILLATOR	ADJUST TO BRING IN SIGNAL. CHECK TO SEE IF PROPER PEAK WAS OBTAINED BY TUNING IN IMAGE AT APPROX. 4.1 MC. IF IMAGE DOES NOT APPEAR REALIGN AT 5.0 MC. WITH TRIMMER SCREW FARTHER OUT. RECHECK IMAGE
400 OHM CARBON RESISTOR	ANTENNA TERMINAL	5.0 MC.	POLICE (Center)	TUNE TO 5.0 MC. GENERATOR SIGNAL	9	POLICE ANTENNA	ADJUST FOR MAXIMUM OUTPUT. TRY TO INCREASE OUTPUT BY DETUNING TRIMMER AND RETUNING RECEIVER DIAL UNTIL MAXIMUM OUTPUT IS OBTAINED.
400 OHM CARBON RESISTOR	ANTENNA TERMINAL	1500 KC.	BROADCAST (Clockwise)	1500 KC.	10	BROADCAST OSCILLATOR (Shunt)	ADJUST TRIMMER TO BRING IN SIGNAL.
400 OHM CARBON RESISTOR	ANTENNA TERMINAL	1500 KC.	BROADCAST (Clockwise)	TUNE TO 1500 KC. GEN.SIG.	11	ANTENNA	ADJUST FOR MAXIMUM OUTPUT.
					12	DETECTOR	
400 OHM CARBON RESISTOR	ANTENNA TERMINAL	600 KC.	BROADCAST (Clockwise)	TUNE TO 600 KC. GENERATOR SIGNAL	13	BROADCAST OSCILLATOR (Series Pad)	ADJUST FOR MAXIMUM OUTPUT. TRY TO INCREASE OUTPUT BY DETUNING TRIMMER AND RETUNING RECEIVER DIAL UNTIL MAXIMUM OUTPUT IS OBTAINED.

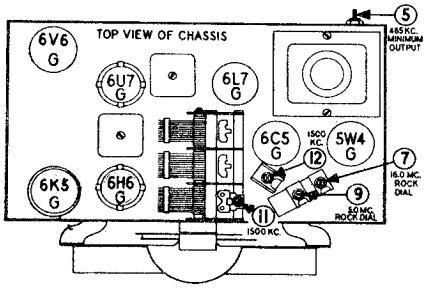

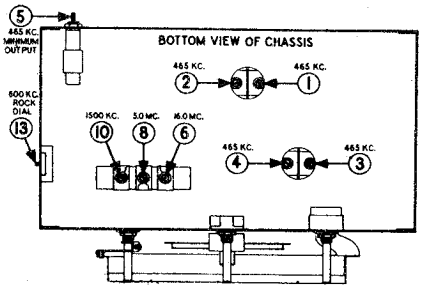

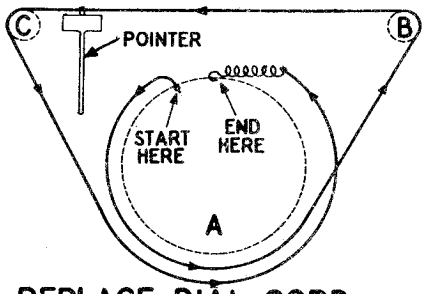

HOW TO REPLACE DIAL CORD

Before attempting to replace the dial cord, fully mesh the gang condenser. The holes in drum A should be in the top position as shown in the diagram above.

The pointer drive cord should be 33 inches or more in length. Place one end of the cord through the left hole in drum; then knot the end. Run the free end of the cord down around the drum and up to pulley B. Continue over pulley B to pulley C, then down to drum A. Bring the cord up around drum D. Tie the cord to the end of the tension spring so that the spring will be extended to about 1-1/8 inches, when hooked to the slot in the drum. Now place the pointer on its track so that it points to the last scale division on the low frequency end of the dial, then clip it to the cord.

©John F. Rider, Publisher

Schematic, Socket, Voltage Parts. Dimmer Connections

STEWART-WARNER CORP.

MODELS 1831-1839 incl. Chassis R-183

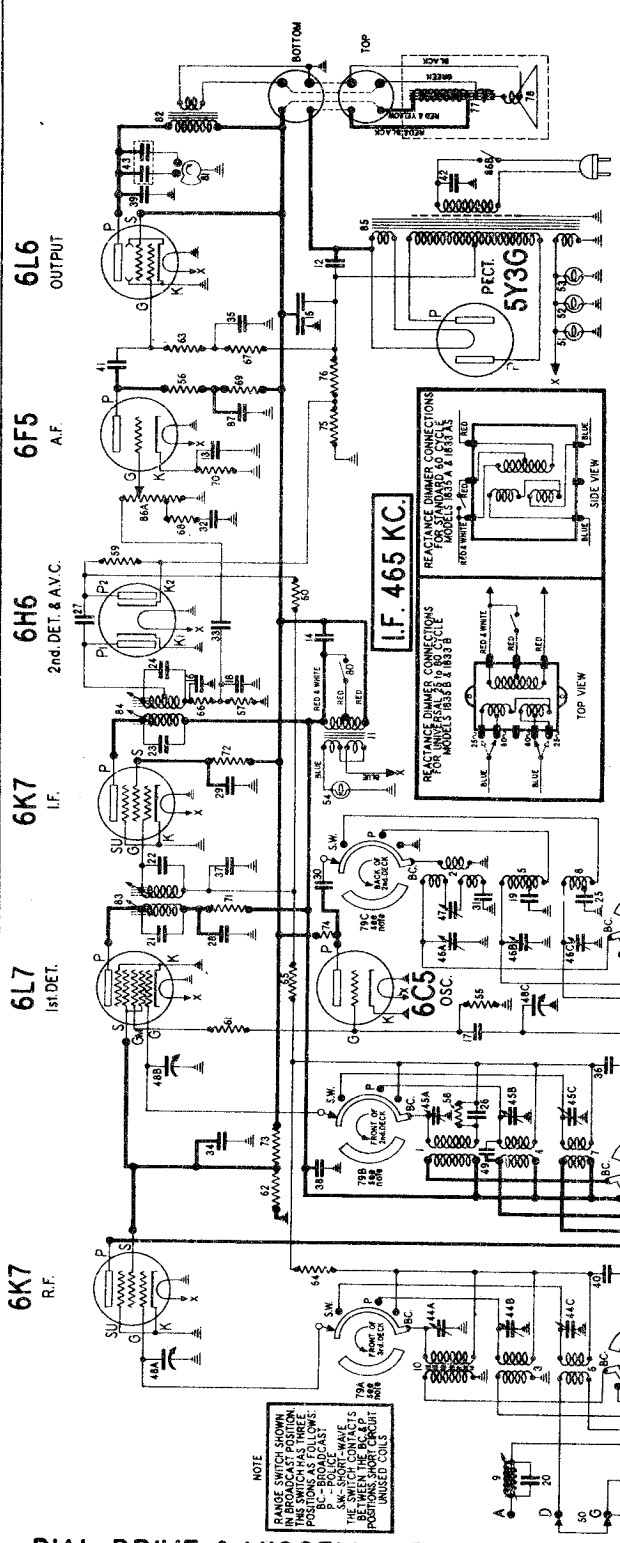

STEWART-WARNER MODEL R-183 CHASSIS (RECEIVER MODELS 1831 to 1839)

DIAGRAM NUMBER	PART NUMBER	DESCRIPTION	LIST PRICE
1	111056	Coil - R.F. (broadcast)	$1.25
2	111067	Coil - oscillator (broadcast)	1.05
3	111058	Coil - antenna (police)	.60
4	111059	Coil - R.F. (police)	1.05
5	111060	Coil - oscillator (police)	1.00
6	111062	Coil - antenna (short-wave)	.90
7	111063	Coil - R.F. (short-wave)	.90
8	111064	Coil - oscillator (short-wave)	.85
9	111079	Coil - antenna trap	1.20
10	111103	Coil - antenna (broadcast)	1.62
11	111191	Coil - reactance dimmer (60 cycle)	2.25
	112201	Coil - reactance dimmer (25 to 60 cycle)	.48
	89857	Condenser - electrolytic 30 mfd. 450 volt	1.60
12	112316	Condenser - elec. 16 mfd. 450 volt (all models)	1.55
	112317	Condenser - elec. 16-16-16 mfd. 450 volt (all models)	
13-14	110377	Condenser - electrolytic 10 mfd. 25 volt	.80
15	111096	Condenser - electrolytic dual 8 mfd.	2.00
16	83539	Condenser - mica 260 mmfd.	.20
17-18	85061	Condenser - mica 51 mmfd.	.15
19	85467	Condenser - mica 1370 mmfd. (3%)	.30
20	86205	Condenser - mica 2100 mmfd.	.35
21-22	110852	Condenser - mica 100 mmfd. (5%)	.18
23	110855	Condenser - mica 60 mmfd. (5%)	.18
24	110859	Condenser - mica 680 mmfd. (5%)	.18
25	111122	Condenser - mica 3560 mmfd. (5%)	.45
26	111123	Condenser - mica 7750 mmfd. (5%)	.65
27	85061	Condenser - mica 51 mmfd.	.15
28-29	86029	Condenser - paper .004 mfd. 400 volt	.25
30-31-32	86030	Condenser - paper .01 mfd. 400 volt	.25
33	86186	Condenser - paper .05 mfd. 70 volt	.25
34	86191	Condenser - paper .1 mfd. 400 volt	.25
35	86185	Condenser - paper .25 mfd. 150 volt	.35

DIAGRAM NUMBER	PART NUMBER	DESCRIPTION	LIST PRICE
36-37	88534	Condenser - paper .05 mfd. 150 volt	.25
38	86682	Condenser - paper .1 mfd. 400 volt	.25
39	89828	Condenser - paper .004 mfd. 750 volt	.24
40	111117	Condenser - low loss .05 mfd. 150 volt	.35
41	111252	Condenser - paper .05 mfd. 400 volt	.13
42	83976	Condenser - shielded .012 mfd. 1000 volt	.40
43	111384	Condenser - shielded (Sect. A - .02 mfd. 600 volt) (Sect. B - .02 mfd. 600 volt)	.85
44A to C	111078	Condenser - trimmer (3 section) for R.F. or antenna (all bands)	.75
45A to C	111089	Condenser - trimmer (3 section) for oscillator (all bands)	.75
46A to C	111115	Condenser - pad (single section)	.63
47	111060	Condenser - variable gang	6.25
48	111073	Condenser - 3 mmfd. (wire)	.10
49	85821	Connector - ground	.01
50	110929	Lamp - bayonet type (6.3 volt .25 amp.)	.15
51-52-53	110941	Lamp - miniature (6.3 volt .15 amp.)	.15
54	110582	Resistor - carbon 47,000 ohm 1/4 watt	.12
55	110552	Resistor - carbon 220,000 ohm 1/4 watt	.12
56-57-58	110553	Resistor - carbon 470,000 ohm 1/4 watt	.12
59-60	110559	Resistor - carbon 100 ohm 1/4 watt	.12
61	110580	Resistor - carbon 22,000 ohm 1/2 watt	.12
62	110562	Resistor - carbon 22,000 ohm 1/4 watt	.12
63-64-65	110564	Resistor - carbon 100,000 ohm 1/4 watt	.12
66-67	110565	Resistor - carbon 22,000 ohm 1/4 watt	.12
68-69	110566	Resistor - carbon 33,000 ohm 1/4 watt	.12
70	110568	Resistor - carbon 2,200 ohm 1/4 watt	.12
71	110575	Resistor - carbon 47,000 ohm 1/4 watt	.12
72	110574	Resistor - carbon 68,000 ohm 1/4 watt	.12
73	110575	Resistor - carbon 12,000 ohm 2 watt	.30
74	110592	Resistor - carbon 22,000 ohm 1 watt	.12
75	111119	Resistor - wire wound 30 ohm 1/2 watt (5%)	.12
76	111120	Resistor - wire wound 110 ohm 2 watt (5%)	.12
77	R-281-A	Speaker - dynamic 12 inch (R-1835)	10.00
	R-281-AP	Speaker - dynamic 8 inch (R-1833)	6.75
78	112402	Speaker - voice coil for 12 inch spkr.	2.90
	112562	Cone - and voice coil for 12 inch speaker	3.30
79A to C	111077	Switch - range and broadcast	.12
80	111218	Switch - for reactance dimmer	.28
81	111234	Switch - tone control	.65
82	111074	Transformer - output	1.85
83	111081	Transformer - 1st I.F.	2.50
84	111082	Transformer - 2nd I.F.	2.45
85	111092	Transformer - power 115 volt 60 cycle	5.65
	112099	Transformer - power 115 volt 25 cycle	
86A-86B	111095	Volume control - 250,000 ohms (with off-on switch)	10.00
87	88682	Condenser - paper .1 mfd. 400 volt	1.25

(PRICES SUBJECT TO CHANGE WITHOUT NOTICE)

SOCKET VOLTAGES

DIAL TUNED TO 525 K.C.

ANTENNA GROUNDED

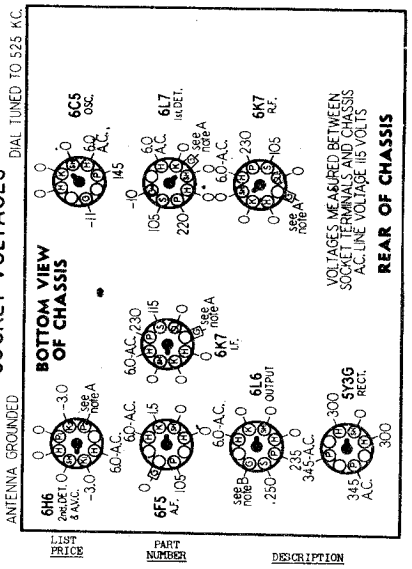

IMPORTANT: Use a high resistance voltmeter of 1000 ohms per volt.

NOTE A: The bias for the control grid of the 6K7 R.F., 6L7 mixer, 6K7 I.F. and the diode plate of the 6H6 tubes is -3 volts measured across resistor 75.

NOTE B: The bias for the control grid of the 6L6 output tube is -13 volts measured across resistors 75 and 76.

DIAL DRIVE & MISCELLANEOUS PARTS

PART NUMBER	DESCRIPTION	LIST PRICE
111228	Band indicator - frame & scale	$ .48
111261	Bolt - chassis mtg. (#14x1-1/4")	.03
111179	Bracket - and bushing (for drive drum)	.20
111201	Bracket - dial support (L.H.)	.48
111202	Bracket - dial support (R.H.)	.40
112321	Bracket - for chassis mtg.(Armchair)	.30
111260	Bushing - rubber (for chassis mtg.)	.06
110782	Cord - for band indicator (2 ft.)	.10
111302	Cord - drive (order 4 - 88348 eyelets) 44" required for pointer dr. (6 ft.) 22" required for cond. drive	.30
111233	Dial - frame & scale complete	2.50
111217	Drum - & bushing	.45
88348	Eyelet - for cord drive - Per dz.	.05
111226	Escutcheon - for dial (with glass)	3.00
111310	Flywheel - with setscrews	1.25
111209	Gear - and shaft (for rope drive)	.50
112363	Glass top - large sect.(Armchair model)	2.90
112365	Glass top - small section (with knob)	2.15
110679	Knob - for range, tone & volume	.20
112125	Knob - tuning	.18
112322	Knob - brass (for glass top)	.75
111197	Lever - for band indicator (on shaft)	.12
110496	Plug - speaker (4 prong)	.12
111236	Pointer - and slide assembly	.15
81145	Retaining ring - for drive shaft- Per C	.50
111222	Scale - dial	1.20
88707	Screw - for mtg. dial frame - per dz.	.06
110716	Screw - band indicator pivot	.03
112138	Setscrew - slotted (round head) 8/32	.03
111206	Shaft - tuning	.40
85427	Socket - 8 prong octal	.15
110501	Socket - speaker (4 prong)	.15
110627	Socket - dial lamp	.12
111008	Socket - band indicator lamp	.12
110817	Speed nut - retainer for escu. to cab.	.01
85815	Spring - between gears (to remove backlash)	.02
111221	Spring - flat (for pointer slide)	.02
112322	Spring - torsion for band indicator	.05
112430	Spring - coil (between flexible coupler)	.08
85056	Terminal strip - 6 p.p.A.	.20
67568	Washer - embossed (for mtg. 89337 electrolytic)	.05
89746	Washer - (paper) for back of knobs	.005
111262	Washer - flat steel mtr. (15/16" O.D.)	.02

FORM NO. 8494 PRINTED IN U.S.A.

©John F. Rider, Publisher

MODELS 1831-1839 incl.
Chassis R-183
Alignment, Trimmers
Dial Data

STEWART-WARNER CORP.

MODEL R-183 CHASSIS (RECEIVER MODELS 1831 to 1839)

HOW TO REPLACE THE DIAL CORD

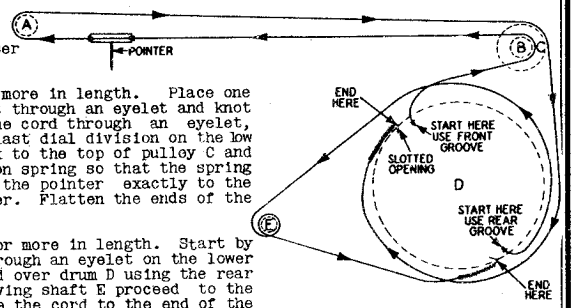

Before attempting to replace either dial cord, fully mesh the gang condenser plates. The holes in drum D should be in the position shown in the diagram.

REPLACING THE POINTER DRIVE CORD: The pointer drive cord should be 40 inches or more in length. Place one end of the cord through the upper hole in the front groove of the drum. Put it through an eyelet and knot the end. Flatten the eyelet. Run the free end up over pulley B. Then thread the cord through an eyelet, the pointer slider, and another eyelet. (See diagram). Set the pointer to the last dial division on the low frequency end of the scale. After this run the cord up over pulley A and back to the top of pulley C and down around drum D, using the front groove. Tie the cord to the end of the tension spring so that the spring will be extended to 1-1/8 inches when hooked to the slot in the drum. Now set the pointer exactly to the last low frequency dial scale division and push the eyelets into the pointer slider. Flatten the ends of the eyelets to hold the slider in position on the cord.

CONDENSER DRIVE CORD: The cord for the main condenser drive should be 19 inches or more in length. Start by placing an end of the cord through the lower hole in the rear groove. Put it through an eyelet on the lower side of the drum and tie a knot in the end. Run the loose end of the cord up and over drum D using the rear groove. Then take the cord down to shaft E and wind 1-1/2 turns around it. Leaving shaft E proceed to the lower side of drum D and place the tension spring on the end of the cord. Tie the cord to the end of the tension spring so that the spring will be extended 1-1/8 inches when hooked to the slot in the drum.

ALIGNMENT EQUIPMENT & PROCEDURE

1. With the gang condenser in full mesh the dial pointer should stop opposite the last low frequency scale division. If the pointer is off not more than one scale division, release the setscrew on the flexible coupler and keeping gang closed, turn the tuning knob until the pointer stops in the correct position. Then retighten the setscrew. If the pointer is off several dial divisions it will be necessary that you release the cord at the slider and reset it.
2. Connect the output meter between the plate of the 6L6 and the chassis, or across the voice coil of the speaker, depending on the type of meter. The more sensitive type should be connected across the voice coil.
3. Connect the ground lead of the signal generator to the chassis and leave it there throughout the entire alignment procedure.
4. Turn the volume control to maximum volume position. Turn the tone control to the brilliant position.
5. KEEP THE GROUND AND DOUBLET CONNECTIONS, ON THE ANTENNA TERMINAL STRIP, CONNECTED TOGETHER THROUGHOUT THE ENTIRE ALIGNMENT PROCEDURE.

DUMMY ANT. IN SERIES WITH SIG. GEN.	CONNECTION OF SIG. GENERATOR OUTPUT TO RECEIVER	SIGNAL GENERATOR FREQUENCY	RANGE SWITCH POSITION	RECEIVER DIAL SETTING	TRIMMER NUMBER	TRIMMER DESCRIPTION	TYPE OF ADJUSTMENT
.1 MFD. CONDENSER	CONTROL GRID OF 6L7 TUBE	465 KC.	BROADCAST (Counter-clock-wise)	ANY POINT WHERE IT DOES NOT AFFECT THE SIGNAL	1-2	1ST I.F.	ADJUST FOR MAXIMUM OUTPUT. THEN REPEAT ADJUSTMENT.
					3-4	2ND I.F.	
400 OHM CARBON RESISTOR	ANTENNA TERMINAL	465 KC.	BROADCAST (Counter-clock-wise)	ANY POINT WHERE IT DOES NOT AFFECT THE SIGNAL	5	WAVE TRAP	ADJUST FOR MINIMUM OUTPUT WITH STRONG SIGNAL.
400 OHM CARBON RESISTOR	ANTENNA TERMINAL	1500 KC.	BROADCAST (Counter-clock-wise)	1500 KC.	6	BROADCAST OSCILLATOR (Shunt)	ADJUST TRIMMER TO BRING IN SIGNAL.
400 OHM CARBON RESISTOR	ANTENNA TERMINAL	1500 KC.	BROADCAST (Counter-clock-wise)	TUNE TO 1500 KC. GENERATOR SIGNAL	7	BROADCAST R.F.	ADJUST FOR MAXIMUM OUTPUT.
					8	BROADCAST ANTENNA	
400 OHM CARBON RESISTOR	ANTENNA TERMINAL	600 KC.	BROADCAST (Counter-clock-wise)	TUNE TO 600 KC. GENERATOR SIGNAL	9	BROADCAST OSCILLATOR SERIES PADDER	ADJUST FOR MAXIMUM OUTPUT. TRY TO IN-CREASE OUTPUT BY DETUNING TRIMMER AND RE-TUNING RECEIVER DIAL UNTIL MAXIMUM OUTPUT IS OBTAINED.
400 OHM CARBON RESISTOR	ANTENNA TERMINAL	5.0 MC.	POLICE (Center)	5.0 MC.	10	POLICE OSCILLATOR (Shunt)	ADJUST TO BRING IN SIGNAL. CHECK TO SEE IF PROPER PEAK WAS OBTAINED BY TUNING IN IMAGE AT APPROX. 4.1 MC. IF IMAGE DOES NOT APPEAR REALIGN AT 5.0 MC. WITH TRIMMER SCREW FARTHER OUT. RECHECK IMAGE.
400 OHM CARBON RESISTOR	ANTENNA TERMINAL	5.0 MC.	POLICE (Center)	TUNE TO 5.0 MC. GENERATOR SIGNAL	11	POLICE R.F.	ADJUST FOR MAXIMUM OUTPUT. TRY TO IN-CREASE OUTPUT BY DETUNING TRIMMER AND RE-TUNING RECEIVER DIAL UNTIL MAXIMUM OUTPUT IS OBTAINED.
					12	POLICE ANTENNA	
400 OHM CARBON RESISTOR	ANTENNA TERMINAL	16.0 MC.	SHORT-WAVE (Clock-wise)	16.0 MC.	13	SHORT-WAVE OSCILLATOR (Shunt)	ADJUST TO BRING IN SIGNAL. CHECK TO SEE IF PROPER PEAK WAS OBTAINED BY TUNING IN IMAGE AT APPROX. 15.1 KC. IF IMAGE DOES NOT APPEAR REALIGN AT 16 MC. WITH TRIMMER SCREW FARTHER OUT. RECHECK IMAGE.
400 OHM CARBON RESISTOR	ANTENNA TERMINAL	16.0 MC.	SHORT-WAVE (Clock-wise)	TUNE TO 16.0 MC. GENERATOR SIGNAL	14	SHORT-WAVE R.F.	ADJUST FOR MAXIMUM OUTPUT. TRY TO IN-CREASE OUTPUT BY DETUNING TRIMMER AND RE-TUNING RECEIVER DIAL UNTIL MAXIMUM OUTPUT IS OBTAINED.
					15	SHORT-WAVE ANTENNA	

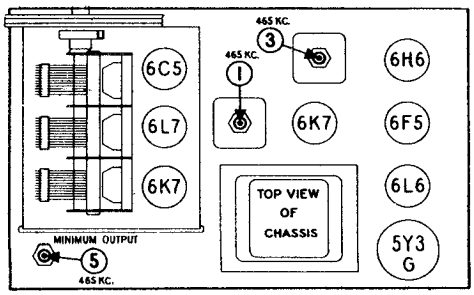

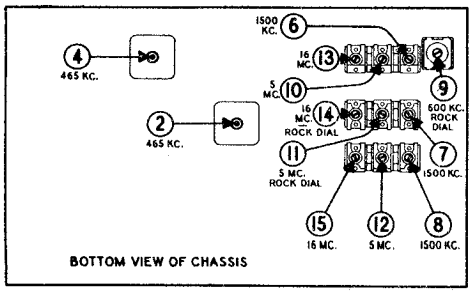

©John F. Rider, Publisher

STEWART-WARNER MODEL R-184

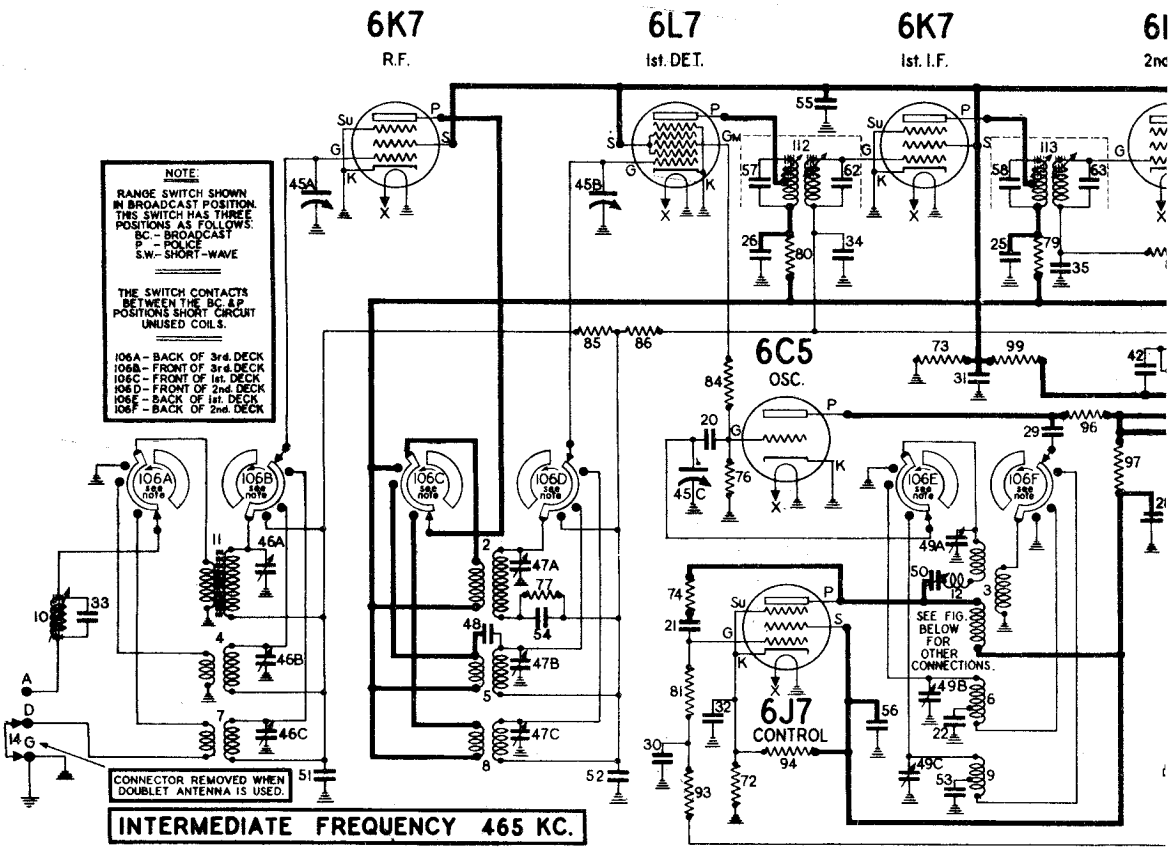

MODEL R-184 PARTS LIST

(SEE OPPOSITE SIDE FOR OTHER PARTS)

DIAGRAM NUMBER	DESCRIPTION	LIST PRICE
1	112097--Choke - Filter (for model R-184-A only	$1.40
	112327--Choke - Filter (for model R-184-W only	1.60
2	111056--Coil - R. F. (broadcast)	1.25
3	111057--Coil - oscillator (broadcast)	1.05
4	111058--Coil - antenna (police)	.80
5	111059--Coil - R. F. (police)	1.00
6	111060--Coil - oscillator (police)	1.00
7	111062--Coil - antenna (short-wave)	.90
8	111063--Coil - R. F. (short-wave)	.90
9	111064--Coil - oscillator (short-wave)	.85
10	111079--Coil - wave trap	1.20
11	111103--Coil - antenna (broadcast)	1.82
12	111488--Coil - compensating inductance	.38
13	112103--Coil - reactance dimmer(60 cycle models only)	2.50
	112204--Coil - reactance dimmer(25 to 80 cycle) for model R-184-B only)	3.25
	112328--Coil - reactance dimmer (for model R-184-W only)	2.70
14	85321--Connector - ground	.01
15-16-17-18	82783--Condenser - mica, 110 mmf.	.20
19	83976--Condenser - .012 mfd. - 1000 volt	.40
20	85061--Condenser - mica, 51 mmfd.	.15
21	85394--Condenser - mica, 510 mmf.	.25
22	85487--Condenser - mica, 1570 mmfd. (3%)	.30
23	88189--Condenser - paper .05 mfd. - 200 volt	.25
24-25-26-27-28-29	88030--Condenser - paper .01 mfd. - 400 volt	.25
30	88046--Condenser - paper .1 mfd. - 150 volt	.25
31	88191--Condenser - paper .1 mfd. - 200 volt	.25
32	88193--Condenser - paper .25 mfd. - 150 volt	.35
33	88205--Condenser - mica, 2100 mmfd.	.35
34-35	88534--Condenser - paper .05 mfd. - 150 volt	.25
36-37	111469--Condenser - electrolytic 16 mfd.-450 volt	1.30
38	111252--Condenser - paper .05 mfd. - 400 volt	.12
39-40	88682--Condenser - paper .1 mfd. - 400 volt	.25
41	89937--Condenser - electrolytic 30 mfd.-450 volt	1.60
42-43-44	110377--Condenser - electrolytic 10 mfd. -25 volt	.80
	112113--Condenser - elect. 10 mfd. 50 volt (for model 184-W only)	.85
45A to 45B	111073--Condenser - variable gang	6.25
45A to 45C	111076--Condenser - trimmer (3 section) for R.F. or antenna (all bands)	.75
47A to 47C		
48	111080--Condenser - 3 mmfd. (wire)	.10
49A to 49C	111089--Condenser - trimmer (3 section) for oscillator (all bands)	.75
50	111115--Condenser - pad (single section)	.63
51-52	111117--Condenser - low loss .05 mfd. 150 volt	.35
53	111122--Condenser - mica, 3580 mmfd. (3%)	.48
54	111123--Condenser - mica, 7750 mmfd. (5%)	.85
55-56	112487--Condenser - electrolytic 4 mfd. 200 volt (used on model R-184-W only)	.80
	111298--Condenser - electrolytic 4 mfd. 200 volt	.75
57-58	111342--Condenser - mica, 200 mmfd. (5%)	.18
59	89826--Condenser - paper .004 mfd. - 750 volt	.24
60A - 60B	111364--Condenser - shielded (Section A - .02 mfd. - 600 volt) (Section B - .03 mfd. - 600 volt)	.85

DIAGRAM NUMBER	DESCRIPTION	LIST PRICE
61	110377--Condenser - electrolytic 10 mfd. 25 volt	.80
	112113--Condenser - electrolytic 10 mfd. 50 volt (for model 184-W only)	.85
62-63-64-65	111575--Condenser - mica 220 mmfd. (5%)	.20
66-67-68-69	110829--Lamp - 6.3 volt - .25 amps.	.15
70	110911--Lamp - dimmer reactor 2.5 volt .5 amp.	.15
71	111380--Motor - 6 volt - 60 cycles	4.40
	112354--Motor - 6 volt, 25 to 80 cycles	5.50
72	112096--Resistor - wire wound 130 ohms 1/2 watt	.12
73	110581--Resistor - carbon 15,000 ohm 1 watt	.15
74	110599--Resistor - carbon 56,000 ohm 1/4 watt	.12
75	110566--Resistor - carbon 33,000 ohm 1/4 watt	.12
76	110552--Resistor - carbon 47,000 ohm 1/4 watt	.12
77	110553--Resistor - carbon 220,000 ohm 1/4 watt	.12
78	110554--Resistor - carbon 1 megohm 1/4 watt	.12
79-80	110557--Resistor - carbon 4700 ohm 1/4 watt	.12
81-82-83	110559--Resistor - carbon 470,000 ohm 1/4 watt	.12
84	110560--Resistor - carbon 100 ohm 1/4 watt	.12
85-86-87-88	110564--Resistor - carbon 100,000 ohm 1/4 watt	.12
89	110562--Resistor - carbon 47,000 ohm 1/4 watt	.12
90	110557--Resistor - carbon 4700 ohm 1/4 watt	.12
91	110387--Resistor - carbon 3900 ohm 1/4 watt	.12
92	110564--Resistor - carb. 100,000 ohm 1/4 watt	.12
93	110580--Resistor - carbon 3.3 megohm 1/4 watt	.12
94	110575--Resistor - carbon 12,000 ohm - 2 watt	.30
95	110563--Resistor - carbon 220,000 ohm 1/4 watt	.12
96	110592--Resistor - carbon 22,000 ohm 1 watt	.12
97	110593--Resistor - carbon 18,000 ohm 3 watt	.20
98	110594--Resistor - carbon 390,000 ohm 1/4 watt	.12
99	110596--Resistor - carbon 15,000 ohm 3 watt	.25
100	111515--Resistor - wire wound 27 ohm 1/2 watt(5%)	.35
101	111514--Resistor - wire wound 170 ohm 2 watt	.15
102	111111--R. F. unit - coils, range switch, gang & trimmers - complete	25.00
103	R-281-A--Speaker - dynamic 12 inch	10.00
104	111490--Cone - voice coil assem.for R-281 spkr.	2.50
105A - 105B	84404--Switch - phono toggle	1.10
106A -106F	111077--Switch - range	3.30
107	111218--Switch - for reactance dimmer	.28
108	111381--Switch - tone control	.55
109	111674--Switch - multiple contact (above tuning shaft)	.95
110	112564--Switch - at rear	1.25
111	89709--Terminal Strip - phono (for model R-184-W only)	.15
112	111336--Transformer - 1st I.F.	2.70
113	111675--Transformer - 2nd I.F.	2.00
114	111340--Transformer - I.F. discriminator	2.70
115	111361--Transformer - output (for Model R-184-A and R-184-B only)	1.75
	112326--Transformer - output (for 184-W only)	1.95
116	111447--Transformer - power 115 volt-60 cycle	8.00
	112176--Transformer - power 115 volt-25 cycle	11.00
	112300--Transformer - power 100 to 240 volt - 50 to 133 cycles	11.00
117A-117B	111358--Volume control - 1 meg.(with off-on switch)	1.40

PRICES SUBJECT TO CHANGE WITHOUT NOTICE.

FOR "MAGIC KEYBOARD

SEE INDEX

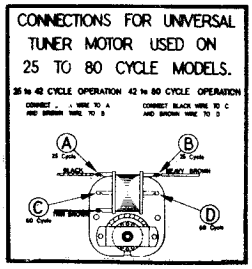

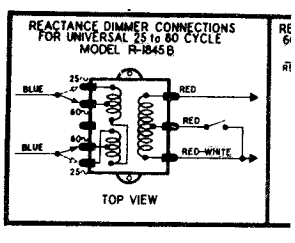

©John F. Rider, Publisher

NER CORP.

MODELS 1841-1849 incl.
Chassis R-184
Schematic, Socket, Voltage
Parts, Data

(RECEIVER MODELS 1841 TO 1849)

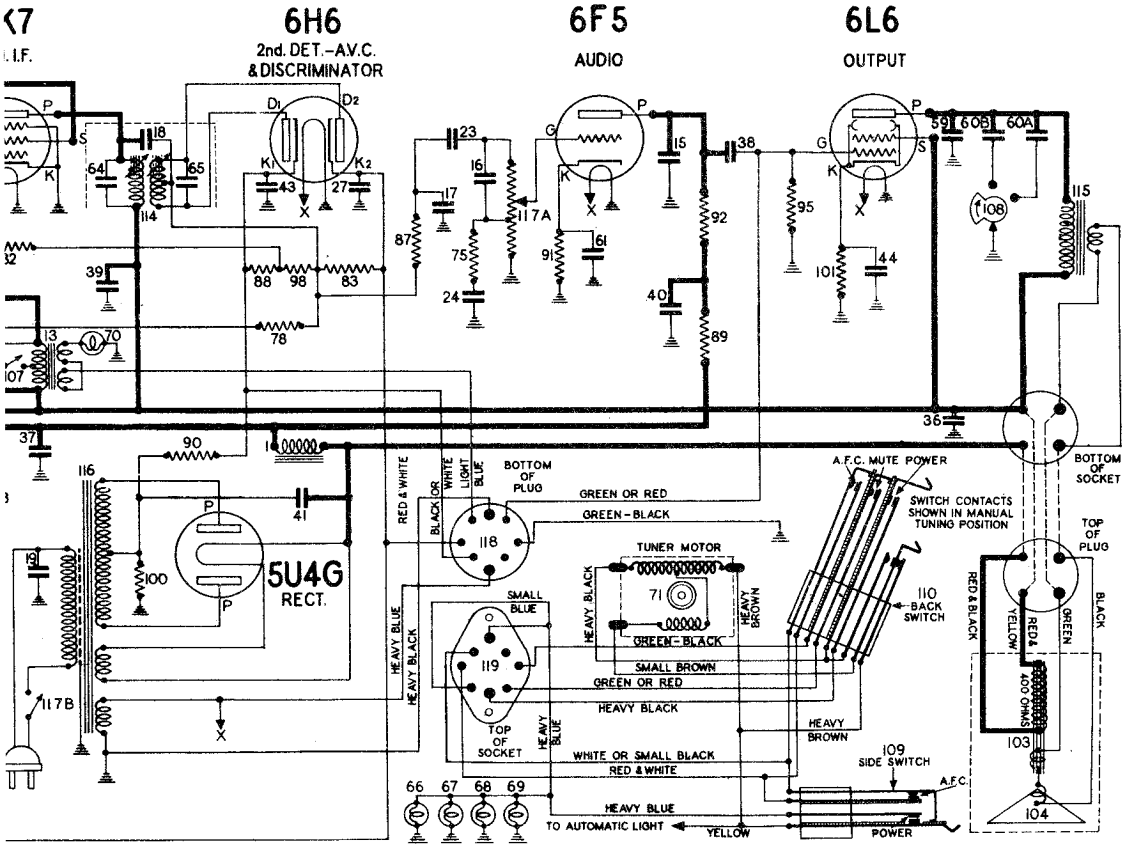

SOCKET VOLTAGES

ANTENNA GROUNDED — DIAL TUNED TO 525 K.C.

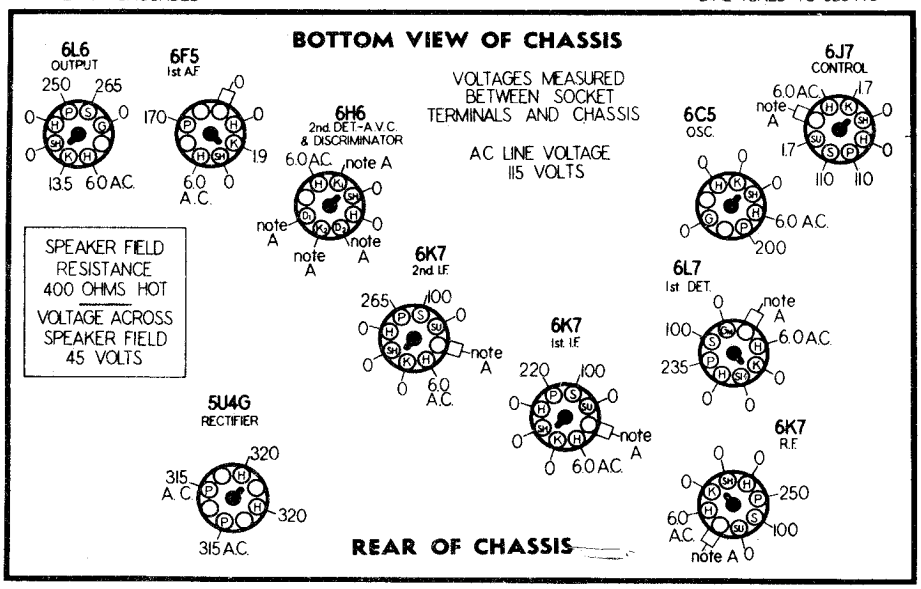

TUNER

,VOL. IX

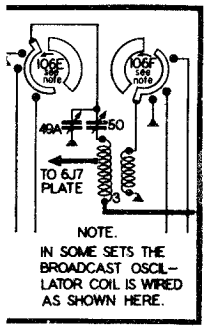

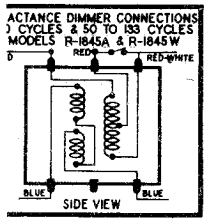

IMPORTANT: Use a high resistance voltmeter of 1000 ohms per volt.

NOTE A; The bias for the control grids of the 6L7 1st Det., 6K7 R.F., 6K7 1st I.F., and 6K7 2nd I.F. tubes, also the voltage on the 6H6 diodes and cathodes and the control grid of the 6J7, is -3.6 volts measured across resistor number 100.

Alignment — STEWART-WARNER CORP. — MODELS 1841-1849 incl. Chassis R-184

MODEL R-184 CHASSIS (RECEIVER MODELS 1841 TO 1849)

FOR INFORMATION ON TUNING MECHANISM,- MAGIC KEYBOARD SERVICE, SEE THE INDEX

The model R-184 chassis is a ten tube, three band, automatic tuning superheterodyne receiver. It has an intermediate frequency of 465 KC. and a tuning range of 525 KC to 18,100 KC. This chassis also incorporates such recent engineering refinements as a reactance dimmer tuning indicator, automatic frequency control, iron core I.F. transformers, a high efficiency R.F. unit, and the Stewart-Warner "Magic Keyboard" for automatic tuning.

ALIGNMENT EQUIPMENT & PROCEDURE

(1)—Before attempting to align the receiver check to see that the dial pointer is opposite the last scale division on the low frequency end of the dial when the gang condenser is in full mesh. Also when the gang condenser is in full mesh the stop pin on the left side of the tuner should be resting against the back stop. If after examination it is found that the gang is in full mesh and the stop pin is against the back stop, but the pointer is set to the wrong position, it will only be necessary to loosen the set screw on the dial drive gear at the left side of the mechanism; then grasp the large drum on the same side of the tuner and turn it until the pointer is set correctly. Now retighten the set screw on the gear being careful to see that the gear is meshing properly.

On the other hand if the stop pin does not rest against the back stop with the gang condenser in full mesh, loosen the set screw on the gang condenser side of the flexible coupler. Then turn the tuning knob until the stop pin rests against the back stop on the tuner. Now retighten the set screw in the flexible coupler and proceed to set the pointer to its correct position by the method described in the previous paragraph.

(2)—Connect the output meter between the plate of the 6L6 power output tube and ground or across the voice coil of the speaker, depending on the type of meter. The more sensitive type should be connected across the voice coil.

(3)—Connect the ground lead of the signal generator to the chassis and leave it there throughout the entire alignment procedure.

(4)—Turn the volume control to the maximum volume position.

(5)—Keep the Ground and Doublet connections on the antenna terminal strip connected together throughout the entire alignment procedure.

TYPE OF DUMMY ANT. IN SERIES WITH SIG.GEN.	POINT TO CONNECT OUTPUT OF SIGNAL GENERATOR.	SIGNAL GENERATOR FREQUENCY	RANGE SWITCH POSITION	RECEIVER DIAL SETTING	TRIMMER NUMBER (see diag. next page)	TRIMMER DESCRIPTION	TYPE OF ADJUSTMENT
.1 MFD CONDENSER	CONTROL GRID OF 6L7 TUBE	465 KC.	BROADCAST (Counter-clockwise)	ANY POINT WHERE IT DOES NOT AFFECT THE SIGNAL	1-2	1ST I.F.	Adjust for maximum output. Then repeat adjustment.
					3-4	2ND I.F.	
					5	3RD I.F.	
400 OHM CARBON RESISTOR	ANTENNA TERMINAL	465 KC.	BROADCAST (Counter-clockwise)	ANY POINT WHERE IT DOES NOT AFFECT THE SIGNAL	6	WAVE TRAP	Adjust for minimum output using a strong generator signal.
400 OHM CARBON RESISTOR	ANTENNA TERMINAL	1500 KC.	BROADCAST (Counter-clockwise)	1500 KC.	7	BROADCAST OSCILLATOR (Shunt)	Adjust trimmer to bring in signal.
400 OHM CARBON RESISTOR	ANTENNA TERMINAL	1500 KC.	BROADCAST (Counter-clockwise)	TUNE TO 1500 KC. GENERATOR SIGNAL	8	BROADCAST DETECTOR	Adjust for maximum output.
					9	BROADCAST ANTENNA	
400 OHM CARBON RESISTOR	ANTENNA TERMINAL	600 KC.	BROADCAST (Counter-clockwise)	TUNE TO 600 KC. GENERATOR SIGNAL	10	BROADCAST OSCILLATOR (Series Pad)	Adjust for maximum output. Try to increase output by detuning trimmer and retuning receiver dial until maximum output is obtained.
400 OHM CARBON RESISTOR	ANTENNA TERMINAL	5 MC.	POLICE (Center)	5 MC.	12	POLICE OSCILLATOR (Shunt)	Adjust to bring in signal. Check to see if proper peak was obtained by tuning in image at approx. 4.1 MC. If image does not appear realign at 5 MC. with trimmer screw farther out. Recheck image.
400 OHM CARBON RESISTOR	ANTENNA TERMINAL	5 MC.	POLICE (Center)	TUNE TO 5 MC. GENERATOR SIGNAL	13	POLICE DETECTOR	Adjust for maximum output. Try to increase output by detuning trimmer and retuning receiver dial until maximum output is obtained.
					14	POLICE ANTENNA	
400 OHM CARBON RESISTOR	ANTENNA TERMINAL	16 MC.	SHORT-WAVE (Clockwise)	16 MC.	15	SHORT-WAVE OSCILLATOR (Shunt)	Adjust to bring in signal. Check to see if proper peak was obtained by tuning in image at approx. 15.1 KC. If image does not appear realign at 16 KC. with trimmer screw farther out. Recheck image.
400 OHM CARBON RESISTOR	ANTENNA TERMINAL	16 MC.	SHORT-WAVE (Clockwise)	16 MC.	16	SHORT-WAVE DETECTOR	Adjust for maximum output. Try to increase output by detuning trimmer and retuning receiver dial until maximum output is obtained.
					17	SHORT-WAVE ANTENNA	

IMPORTANT: ALLOW RECEIVER TO WARM UP 15 MINUTES BEFORE ALIGNING. SEE THAT NONE OF THE PUSH BUTTONS ARE DEPRESSED WHEN ALIGNING.

A.F.C. ALIGNMENT.

IMPORTANT: The following adjustment must be made after every re-adjustment of the I.F. and broadcast band trimmers.

The A.F.C. Discriminator should be adjusted as follows:

1. Be sure no buttons are depressed. Loosely couple the output of the signal generator to the 6L7 control grid by clipping the signal generator output lead to the insulation on the control grid wire, or connect to the grid clip through a 50 mmfd. mica condenser. BE SURE THE RANGE SWITCH IS IN THE BROADCAST (COUNTER-CLOCKWISE) POSITION.
2. Adjust the signal generator to resonance with I.F. system by tuning the signal generator dial for maximum output meter deflection. Be sure that the receiver dial is at some point where it has no tuning effect on the generator signal. Switch off the modulation.
3. With the signal generator connected and operating as in #2, connect antenna and manually tune in powerful local station in region of 1000 KC. or lower. (Avoid stations around 930 KC. which might beat with second harmonic of test oscillator.)
4. Adjust receiver tuning dial to obtain zero beat between the test oscillator and the incoming signal. (A very slight adjustment is all that is required. Be careful not to tune off signal.)
5. Refer to the figure on the right. It is now necessary to open the A.F.C. contacts & allow it to function. This may be done by placing a piece of smooth cardboard between the A.F.C. contacts as shown in the figure. Be careful not to bend or malform the switch in any way.
6. Now, adjust the secondary of the discriminator transformer (Trimmer #11) to restore zero beat. NOTE: This trimmer should be adjusted to the point where the frequency of the beat note increases rapidly if the trimmer is turned in either direction. Other zero beat points may be found with the trimmer all the way in or all the way out, but these settings are incorrect.

If this operation has been performed correctly, the opening or closing of the A.F.C. contacts on the side switch by inserting or removing the cardboard, should not change the beat note by more than a slight rumble.

NOTE:- Where a second signal generator is available step #3 above may be varied as follows:

Connect second signal generator (set at about 1000 KC.) to antenna and tune in its signal. Switch off modulation and proceed as before.

This method is somewhat preferable to the first as the zero beat setting is more easily determined when both signals are unmodulated.

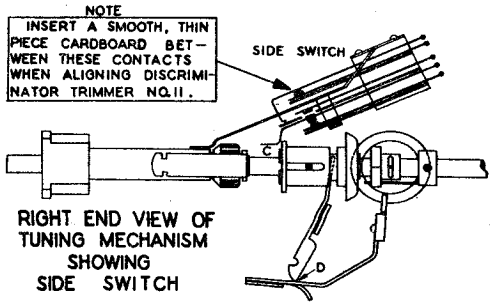

RIGHT END VIEW OF TUNING MECHANISM SHOWING SIDE SWITCH

©John F. Rider, Publisher

MODELS 1841-1849 incl.
Chassis R-184

STEWART-WARNER CORP.

AFC Data, Socket, Trimmers
Tuner Data,
R-1845-W Phono. Data

TESTING THE AFC SYSTEM

Connect the antenna and tune in a powerful local station. Remove the cardboard that you placed between the A.F.C. contacts on the side switch when aligning. The A.F.C. is now off.

Next, detune the receiver dial until the music or speech becomes somewhat distorted. Now place a piece of smooth cardboard between the A.F.C. contacts on the side switch as shown in the illustration on the bottom of the previous page. This allows A.F.C. to function and it should improve the quality of the program.

Similarly detune the receiver dial in the opposite direction, with the cardboard removed from between the A.F.C. contacts (contacts closed). Then place the cardboard between the contacts again and check for improved quality of reception.

It will be noted that the correction for mistuning afforded by the A.F.C. system is not as marked at stations near the low frequency end of the dial scale as it is at the higher broadcast frequencies. This is characteristic of A.F.C. systems. However, if opening the A.F.C. contacts on the side switch (by inserting the piece of cardboard between the contacts) has no effect on the signal, or if it corrects for mistuning in one direction only, check the receiver as follows:

1. Re-align I.F., broadcast band, and discriminator trimmers.
2. Check all the tubes in the receiver. Defective 6H6 and 6J7 tubes, also the R.F., 1st Detector, and I.F. tubes may cause poor A.F.C. action.
3. If the above procedure fails to remedy the defect in A.F.C. action, check the entire A.F.C. circuit itself for possible troubles.

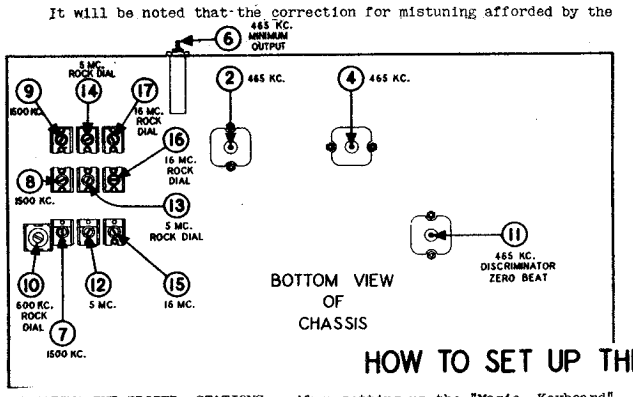

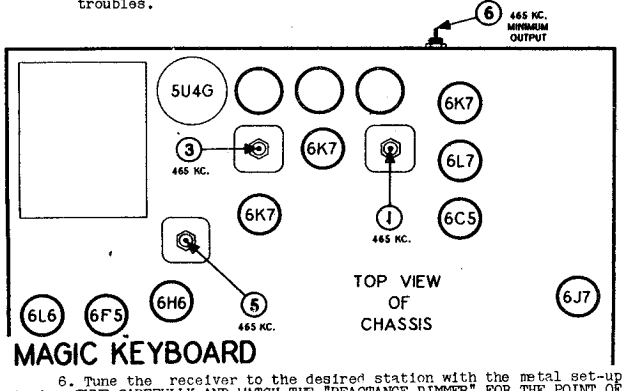

HOW TO SET UP THE MAGIC KEYBOARD

SELECTING THE PROPER STATIONS: When setting up the "Magic Keyboard" select powerful nearby stations. Avoid weak or fading stations.

LABELLING THE PUSH BUTTONS: Call letter labels are supplied with each set. To label any button remove the cap of the push button, BY PULLING ON THE TOP END. Remove the black cardboard disc, and insert the call letter tab. IN REPLACING THE CAP START AT THE BOTTOM AND PRESS ON THE TOP.

STEP BY STEP PROCEDURE:

1. Connect a good outside aerial to the receiver and allow the receiver to operate for 20 minutes before setting-up.

2. Pull off the large tuning knob. As this knob is removed another small "set-up" knob on the same shaft will appear partly hidden behind the panel face.

3. Pull out this set-up knob AS FAR AS IT WILL GO.

4. Rotate the set-up knob clockwise. After dial pointer reaches the end of the dial scale continue to turn the knob clockwise until you have forced it to a definite stop. This last twist unlocks the cams.

5. Push any button you wish to set to a station. The tuner will operate and carry the pointer to some new point on the dial scale.

Wherever the word RIGHT or LEFT appears in the following list, it is understood that you are standing in front of the receiver.

PART NUMBER	DESCRIPTION	LIST PRICE
111930	Band Indicator - and frame assembly	$ .40
112658	Belt - for range switch drive	.06
111261	Bolt - chassis mtg. (#14 X 1-1/4)	.03
111260	Bushing - rubber (for chassis mtg.)	.06
111892	Bushing - hard rubber, mystic mechanism mtg. to chassis	.02
111658	Clip - for pulley retaining	.01
110782	Cord - for band ind. (2 ft. required -----Per Ft.	.04
111302	Cord - dial drive (6 ft. lengths)	.30
111226	Escutcheon - for dial (with glass)	3.00
111227	Escutcheon - around push button opening	1.20
111865	Frame - dial, with scale	2.50
111496	Knob - tuning or volume	.20
111497	Knob - range or tone	.20
111197	Lever - for band indicator (on shaft)	.12
111370	Link & Lever - for range sw. drive (used in early production)	.20
112633	Plug - for mechanism connecting (8 prong)	.20
110496	Plug - speaker (4 prong)	.12
111859	Pointer - for dial, with slider	.18
111622	Pulley - dial cord drive	.35
111630	Pulley & Bracket - for band indicator	.10
112628	Pulley - on range switch shaft under chassis	.20
84214	Retaining Ring - for dial drum shafts	.02
89837	Retaining Spring - for retaining escut.to cabinet	.01
111222	Scale - dial	1.20
110716	Screw - band indicator pivot	.03
111116	Screw - #5 X 5/8, mystic mechanism mtg.	.02
85827	Set Screw - 8/32 square head	.02
111403	Set Screw - 8/32, fluted head	.12
112138	Set Screw - 8/32 slotted head	.03
111373	Shaft - for range switch	.08
85427	Socket - octal base	.15
110501	Socket - 4 prong (for spkr.)	.16
110627	Socket - dial lamp & automatic lamp	.12
111008	Socket - reactance dimmer lamp	.12
112630	Socket & Bracket - for elect. conn. to mech.	.75
111232	Spring - torsion for band indicator	.05
111862	Spring - drive cord tension	.03
112490	Spring - in flexible coupler	.02
111676	Stud - lower left idler pulley	.10
112667	Stud - for pulley mtg. (for top pulleys)	.10
112005	Tabs - station call letters (6 sheets)	.60
85066	Terminal Strip - G.D.A.	.20
89709	Terminal Strip - Phono.	.15
67568	Washer - embossed (for mtg. electrolytic cond.)	.05
89746	Washer - (paper) for back of knobs	.005
89027	Washers - spring for range shaft	.01
111262	Washer - flat steel mtg. (15/16" O.D.)	.02

6. Tune the receiver to the desired station with the metal set-up knob. TUNE CAREFULLY AND WATCH THE "REACTANCE DIMMER" FOR THE POINT OF MINIMUM ILLUMINATION SO THAT THE RECEIVER WILL BE CORRECTLY TUNED TO THE STATION.

7. Push in the next button you want to set up for a station. This automatically completes the setting up of the previous station, and causes its button to pop out. Do not push in any buttons that are already set up and which you do not wish to change, since pushing a button with the cams unlocked will shift its setting.

8. Tune in the station for the button that is now depressed.

9. Set-up other buttons as desired in the same manner, that is, push in the button, tune in the station, then push in the next button.

10. To release the last button grasp the set-up knob on the station selector shaft and push it in until the last button is released. Then pull the knob out again.

11. Turn the set-up knob to the LEFT (Counter-clockwise). CONTINUE TO TURN THE KNOB TO THE LEFT even after the pointer reaches the end of the dial scale. FORCE THE KNOB COUNTER-CLOCKWISE TO A DEFINITE STOP.

12. Push the "set-up" knob back into the cabinet again and replace the large tuning knob.

13. Your "Magic Keyboard" is now ready for operation.

PART NUMBER	DESCRIPTION	LIST PRICE
112727	Mystic Mechanism - complete with all dials - ready to mount on chassis	$60.00
111350	Mystic Mechanism only, less dial frame assembly	35.00
112428	Button Body - for tuner	.10
112545	Button Cap - for push button	.06
111878	Button Window - celluloid for push button	.01
112547	Button Reinforcing Disc - for push button	.01
111633	Button Retaining Spring - inside push button	.02
111577	Button Spring - in push button	.005
111578	Button Washer - in push button	.005
112563	Cam - bakelite - less operating arm	.10
111148	Clutch - bushing, spring and gear	.55
111137	Drive Ring - rubber	.05
111380	Motor - 6 volt, 60 cycles	4.40
112354	Motor - 6 volt, 25 to 80 cycles	5.50
112736	Plug - with cable for tuner connections	.75
111138	Spring - horseshoe shaped on clutch	.02
111674	Switch Side - multiple contact (above tuning shaft)	.95
112564	Switch Back - (multiple contact)	1.25
112521	Tip - adjustable for key stop and kickout arm	.06
112483	Wrench - for fluted head set screws #6	.07
112484	Wrench - for fluted head set screws #8	.07
117468	Spring Benders	.75

PHONOGRAPH CONNECTIONS FOR MODEL R-1845-W

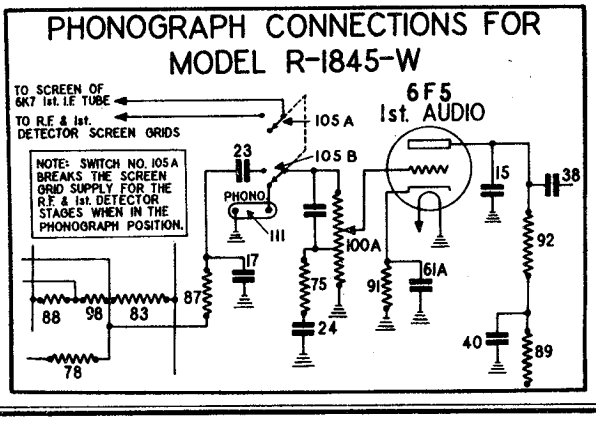

©John F. Rider, Publisher

STEWART-WARNER MODEL R-186 CHAS

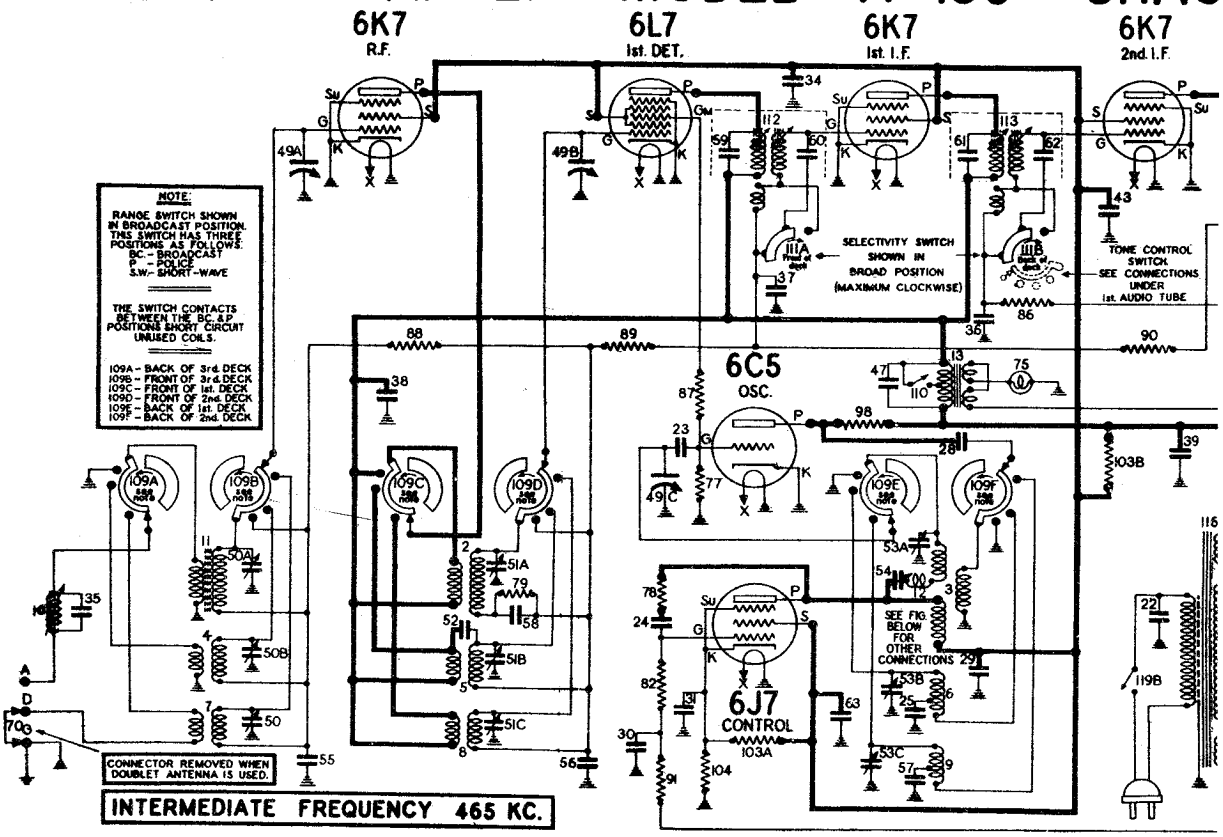

MODEL R-186 PARTS LIST

(SEE OPPOSITE SIDE FOR OTHER PARTS)

DIAGRAM NUMBER	PART NUMBER	DESCRIPTION	LIST PRICE
1	111330	Choke - filter (for model R-186-A and R-186-B)	$ 1.60
	112330	Choke - filter (Models R-186-W and R-186-P)	1.50
2	111056	Coil - R.F. Broadcast	1.25
3	111057	Coil - oscillator broadcast	1.05
4	111058	Coil - antenna (police)	.80
5	111059	Coil - R.F. (police)	1.00
6	111060	Coil - oscillator (police)	1.00
7	111062	Coil - antenna (short wave)	.90
8	111063	Coil - R.F. (short wave)	.90
9	111064	Coil - oscillator (short wave)	.85
10	111079	Coil - wave trap	1.20
11	111103	Coil - antenna broadcast	1.62
12	111488	Coil - compensating inductance	.38
	112103	Coil - reactance dimmer (60 cycle) models only	2.50
13	112204	Coil - reactance dimmer (25 to 80 cycle) for model R-186-W)	3.25
	112328	Coil - reactance dimmer (for models R-186-W and R-186-P)	2.70
14-15-16 17-18	83539	Condenser - mica 260 mmfd.	.20
19-20-21	83783	Condenser - mica, 110 mmf.	.20
22	83976	Condenser - shielded .012 mfd. 1000 volt	.40
23	86061	Condenser - mica .51 mmfd.	.15
24	85294	Condenser - mica 510 mmf.	.25
25	85467	Condenser - mica, 1370 mmfd. (3%)	.30
26	88026	Condenser - paper .02 mfd. 400 volt	.25
27-28-29	88030	Condenser - paper .01 mfd. 400 volt	.25
30-31	86046	Condenser - paper .1 mfd. 150 volt	.25
32-33	88180	Condenser - paper .05 mfd. 200 volt	.25
34	88191	Condenser - paper .1 mfd. 300 volt	.25
35	88205	Condenser - mica, 2100 mmfd.	.35
36-37	88534	Condenser - paper .05 mfd. 150 volt	.25
38-39-40 41-42	88682	Condenser - paper .1 mfd. 400 volt	.25
43	89532	Condenser - paper .25 mfd. 200 volt	.32
44	89828	Condenser - paper .004 mfd. 750 volt	.24
45-46	89927	Condenser - electrolytic 30 mfd.450 volt	1.80
47-48	110877	Condenser - electrolytic 10 mfd. 25 volt	.80
	112480	Condenser - electrolytic 10 mfd. 25 volt (for R-186-W or R-186-P only)	.80
49A to C	111073	Condenser - variable gang	6.25
50A to C	111078	Condenser - trimmer (three section) for R.F. or Ant.)	.75
51A to C			
52	111080	Condenser - wire 1.8 mmfd.	.10
53A to C	111089	Condenser - trimmer (3 section)for osc.-	.75
54	111115	Condenser - padder	.65
55-56	111117	Condenser - low loss .05 mfd. 150 volt	.25
57	111122	Condenser - mica, 3580 mmfd. (3%)	.48
58	111123	Condenser - mica, 7750 mmfd.	.85
59-60-61-62 63-64	111342	Condenser - mica, 200 mmfd. (5%)	.18
65A - 65B	111367	Condenser - Shielded Dual (Section A - .01 mfd. 600 volt) (Section B - .02 mfd. 600 volt)	.85
66	111469	Condenser - Electrolytic 16 mfd. 450 V.-	1.30
67	111652	Condenser - electrolytic 12 mfd.150 volt	1.36
	112478	Condenser - electrolytic 12 mfd.150 volt (For Model 186-W or 186-P only)	1.36
68	111689	Condenser - electrolytic 20 mfd. 25 volt	1.20
	112481	Condenser - electrolytic 20 mfd. 25 volt (For Model 186-W or 186-P only)	1.20
69	111910	Condenser - mica, 150 mmfd. (5%)	.18
70	86321	Connector - ground doublet	.01
71-72-73-74	110629	Lamp - dial 6 to 8 volt .25 amp.	.15
75	110911	Lamp - reactance dimmer 2.5 volt .5 amp.	.15
76	89769	Resistor - wire wound 40 ohm 1 watt	.12
77-78	110552	Resistor - carbon 47,000 ohm 1/4 watt	.12
79	110553	Resistor - carbon 220,000 ohm 1/4 watt	.12
80	110554	Resistor - carbon 1 megohm 1/4 watt	.12
81	110557	Resistor - carbon 4700 ohm 1/4 watt	.12
82-83-84 85-86	110559	Resistor - carbon 470,000 ohm 1/4 watt	.12
87	110560	Resistor - carbon 100 ohm 1/4 watt	.12
88-89-90	110564	Resistor - carbon 100,000 ohm 1/4 watt	.12
91	110580	Resistor - carbon 3.3 megohm 1/4 watt	.12
92-93-94-95	110585	Resistor - carbon 33,000 ohm 1/4 watt	.12
96-97	110586	Resistor - carbon 2,200 ohm 1/4 watt	.12
98	110592	Resistor - carbon 22,000 ohm 1/4 watt	.12
99-100	110597	Resistor - carbon 100,000 ohm 1/4 watt	.12
101-102	110598	Resistor - carbon 330,000 ohm ± W.(10%)	.12
103A - 103C	111417	Resistor - bleeder: Section A 5600 ohms Section B 5600 ohms Section C 1500 ohms	1.15
104	111685	Resistor - wire wound 280 ohms ± W. (5%)	.15
105	111686	Resistor - wire wound 250 ohms 2 watt	.20
	111111	R. F. Unit - coils, range switch, gang and trimmers - complete	25.00
106	R-288	Speaker - dynamic 12"(Models 1865 & 1869)	15.00
	115006	Speaker - dynamic 10"---(Model R-1866)---	13.50
	115007	Speaker - P.M. dynamic 8"(Model R-1866)-	8.15
	112109	Cone - voice coil assem. for R-288 spkr.	2.30
107	112575	Cone - voice coil for 115006 spkr.	2.25
	112673	Cone - voice coil assem (115007 spkr.)---	2.00
108A - 108B	84404	Switch - phono toggle	1.10
109A to F	111077	Switch - range	3.30
110	111218	Switch - reactance dimmer	.28
111A - 111B	111401	Switch - tone & selectivity control	.95
112-113	111425	Transformer - 1st or 2nd I.F.	2.75
114	111426	Transformer - discriminator I.F.	3.15
115	111427	Transformer - 4th I.F.	2.50
116	111393	Transformer - Power 115 volt 60 cycle	9.00
	112183	Transformer - Power 117 volt 25 cycle	12.00
	112333	Transformer - Power 100 to 240 volt, 50 to 133 cycles	12.00
117	111331	Transformer - impedance coupler (for models R-186-A or R-186-B)	2.10
	112331	Transformer - impedance coupler (for models R-186-W and R-186-P)	2.35
118	111398	Transformer - output for R-288 spkr.	3.00
	112573	Transformer - output for 115006 spkr.	3.25
119A - 119B	111358	Vol. Cont. - 1 meg. (with off-on switch)	1.40
120	86 78	Terminal Strip - phono	.15
121	112354	Motor - 6 volt, 25 to 80 cycles	5.50
	111380	Motor - 6 volt, 60 cycles	4.40
122	111674	Switch - multiple contact (above tuning shaft)	.95
123	112564	Switch - at rear	1.25
124	112630	Socket & Bracket - for electrical connections to mechanism	.75
125	112633	Plug - for mechanism conn. (8 prong.)	.20

PRICES SUBJECT TO CHANGE WITHOUT NOTICE.

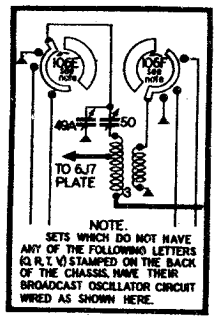

FOR "MA
SEE

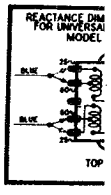

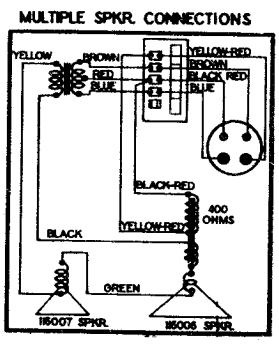

©John F. Rider, Publisher

ARNER CORP.

MODELS 1861-1869 incl.
Chassis R-186
Schematic, Socket, Voltage
Parts, Speaker, Tuner Data

SIS (RECEIVER MODELS 1861 TO 1869)

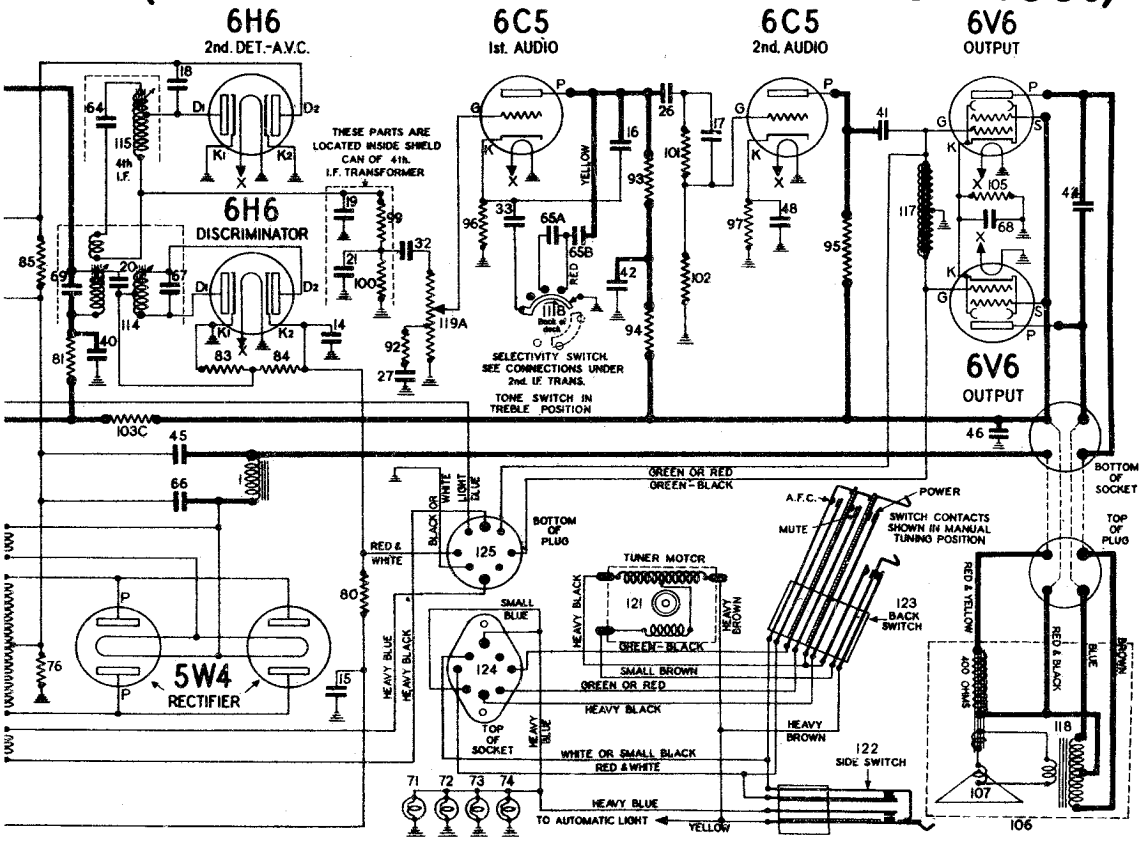

GIC KEYBOARD" TUNER
INDEX ,VOL. IX

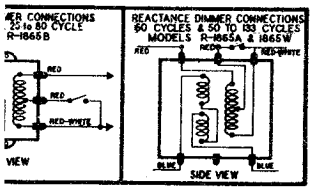

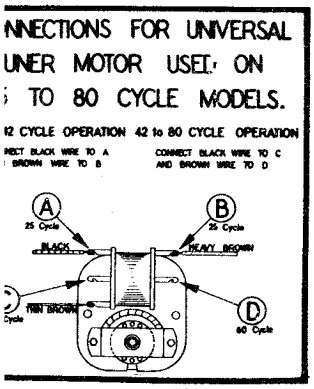

SOCKET VOLTAGES

ANTENNA GROUNDED — DIAL TUNED TO 525 K.C.

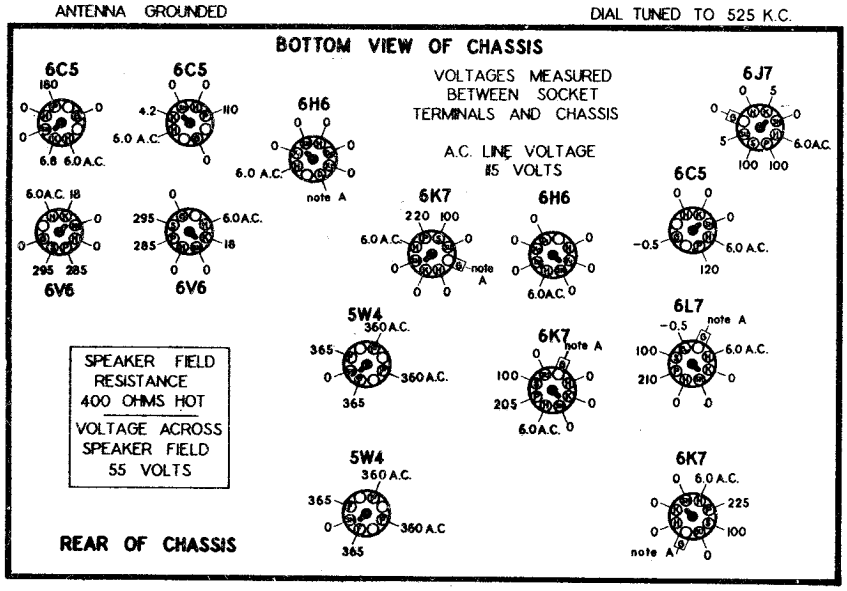

IMPORTANT: Use a high resistance voltmeter of 1000 ohms per volt.

NOTE A: The bias for the control grids of the 6L7 1st Det., 6K7 R.F., 6K7 1st I.F. and 6K7 2nd I.F. tubes, also the voltage on the 6H6 A.V.C. diode, is -4 volts measured across resistor number 76.

STEWART-WARNER CORP.

MODELS 1861-1869 incl.
Chassis R-186
Alignment

MODEL R-186 CHASSIS (RECEIVER MODELS 1861 TO 1869)

FOR THE MAGIC KEYBOARD SERVICE, — INFORMATION ON TUNING MECHANISM, SEE INDEX

The model R-186 chassis, is a 14 tube, three band, automatic tuning, superheterodyne receiver. It has an intermediate frequency of 465 KC. and tuning range of 525 KC.to 18,100 KC. The circuit is of the latest design incorporating such refinements as a special high efficiency R.F. unit automatic frequency control, reactance dimmer, tuning indicator, and iron core I.F. transformers.

ALIGNMENT EQUIPMENT AND PROCEDURE

① Before attempting to align the receiver check to see that the dial pointer is opposite the last scale division on the low frequency end of the dial when the gang condenser is in full mesh. Also when the gang condenser is in full mesh the stop pin on the left side of the tuner should be resting against the back stop. If after examination it is found that the gang is in full mesh and the stop pin is against the back stop, but the pointer is set to the wrong position, it will only be necessary to loosen the set screw on the dial drive gear at the left side of the mechanism; then grasp the large drum on the same side of the tuner and turn it until the pointer is set correctly. Now retighten the set screw on the gear being careful to see that the gear is meshing properly.

② On the other hand if the stop pin does not rest against the back stop with the gang condenser in full mesh, loosen the set screw on the gang condenser side of the flexible coupler. Then turn the tuning knob until the stop pin rests against the back stop on the tuner. Now retighten the set screw in the flexible coupler and proceed to set the pointer to its correct position by the method described in the previous paragraph.

③ Connect the output meter across the two plates of the two 6V6 power output tubes or across the voice coil of the speaker, depending on the type of meter. The more sensitive type should be connected across the voice coil.

Connect the ground lead of the signal generator to the chassis and leave it there throughout the entire alignment procedure.

④ Turn the volume control to the maximum volume position.

Keep the Ground and Doublet connections on the antenna terminal strip connected together throughout the entire alignment procedure.

TYPE OF DUMMY ANT. IN SERIES WITH SIG.GEN.	POINT TO CONNECT OUTPUT OF SIGNAL GENERATOR.	SIGNAL GENERATOR FREQUENCY	RANGE SWITCH POSITION	RECEIVER DIAL SETTING	TRIMMER NUMBER (see diag. next page)	TRIMMER DESCRIPTION	TYPE OF ADJUSTMENT
.1 MFD CONDENSER	CONTROL GRID OF 6L7 TUBE	465 KC.	BROADCAST (Counter-clockwise)	ANY POINT WHERE IT DOES NOT AFFECT THE SIGNAL	1-2	1ST I.F.	Adjust for maximum output. Then repeat adjustment. The tone control switch must be in the SHARP-POSITION (Counter-clockwise),or the alignment will be incorrect.
					3-4	2ND I.F.	
					5	3RD I.F.	
					6	4TH I.F.	
400 OHM CARBON RESISTOR	ANTENNA TERMINAL	465 KC.	BROADCAST (Counter-clockwise)	ANY POINT WHERE IT DOES NOT AFFECT THE SIGNAL	7	WAVE TRAP	Adjust for minimum output using a strong generator signal.
400 OHM CARBON RESISTOR	ANTENNA TERMINAL	1500 KC.	BROADCAST (Counter-clockwise)	1500 KC.	8	BROADCAST OSCILLATOR (Shunt)	Adjust trimmer to bring in signal.
400 OHM CARBON RESISTOR	ANTENNA TERMINAL	1500 KC.	BROADCAST (Counter-clockwise)	TUNE TO 1500 KC. GENERATOR SIGNAL	9	BROADCAST DETECTOR	Adjust for maximum output.
					10	BROADCAST ANTENNA	
400 OHM CARBON RESISTOR	ANTENNA TERMINAL	600 KC.	BROADCAST (Counter-clockwise)	TUNE TO 600 KC. GENERATOR SIGNAL	11	BROADCAST OSCILLATOR (Series Pad)	Adjust for maximum output. Try to increase output by detuning trimmer and retuning receiver dial until maximum output is obtained.
400 OHM CARBON RESISTOR	ANTENNA TERMINAL	5 MC.	POLICE (Center)	5 MC.	12	POLICE OSCILLATOR (Shunt)	Adjust to bring in signal. Check to see if proper peak was obtained by tuning in image at approx. 4.1 MC. If image does not appear realign at 5 MC. with trimmer screw farther out. Recheck image.
400 OHM CARBON RESISTOR	ANTENNA TERMINAL	5 MC.	POLICE (Center)	TUNE TO 5 MC. GENERATOR SIGNAL	13	POLICE DETECTOR	Adjust for maximum output. Try to increase output by detuning trimmer and retuning receiver dial until maximum output is obtained.
					14	POLICE ANTENNA	
400 OHM CARBON RESISTOR	ANTENNA TERMINAL	16 MC.	SHORT-WAVE (Clockwise)	16 MC.	15	SHORT-WAVE OSCILLATOR (Shunt)	Adjust to bring in signal. Check to see if proper peak was obtained by tuning in image at approx. 15.1 KC. If image does not appear realign at 18 KC. with trimmer screw farther out. Recheck image.
400 OHM CARBON RESISTOR	ANTENNA TERMINAL	16 MC.	SHORT-WAVE (Clockwise)	16 MC.	16	SHORT-WAVE DETECTOR	Adjust for maximum output. Try to increase output by detuning trimmer and retuning receiver dial until maximum output is obtained.
					17	SHORT-WAVE ANTENNA	

IMPORTANT
THE TONE SWITCH MUST BE IN THE SHARP COUNTER-CLOCKWISE POSITION AT ALL TIMES
SEE THAT NONE OF THE PUSH BUTTONS ARE DEPRESSED WHEN ALIGNING.
ALLOW RECEIVER TO WARM UP 15 MINUTES BEFORE ALIGNING.

A.F.C. ALIGNMENT.

IMPORTANT: The following adjustment must be made after every re-adjustment of the I.F. and broadcast band trimmers.

The A.F.C. Discriminator should be adjusted as follows:

1. Be sure no buttons are depressed. Loosely couple the output of the signal generator to the 6L7 control grid by clipping the signal generator output lead to the insulation on the control grid wire, or connect to the grid clip through a 50 mmfd. mica condenser. BE SURE THE RANGE SWITCH IS IN THE BROADCAST (COUNTER-CLOCKWISE) POSITION.
2. Adjust the signal generator to resonance with I.F. system by tuning the signal generator dial for maximum output meter deflection. Be sure that the receiver dial is at some point where it has no tuning effect on the generator signal. Switch off the modulation.
3. With the signal generator connected and operating as in #2, connect antenna and manually tune in powerful local station in region of 1000 KC. or lower. (Avoid stations around 930 KC. which might beat with second harmonic of test oscillator.)
4. Adjust receiver tuning dial to obtain zero beat between the test oscillator and the incoming signal. (A very slight adjustment is all that is required. Be careful not to tune off signal.)
5. Refer to the figure on the right. It is now necessary to open the A.F.C. contacts & allow the A.F.C. to function. This may be done by placing a piece of smooth cardboard between the A.F.C. contacts as shown in the figure. Be careful not to bend or malform the switch in any way.
6. Now, adjust the secondary of the discriminator transformer (Trimmer #18) to restore zero beat. NOTE: This trimmer should be adjusted to the point where the frequency of the beat note increases rapidly if the trimmer is turned in either direction. Other zero beat points may be found with the trimmer all the way in or all the way out, but these settings are incorrect.

If this operation has been performed correctly, the opening or closing of the A.F.C. contacts on the side switch by inserting or removing the cardboard,should not change the beat note by more than a slight rumble.

NOTE:- Where a second signal generator is available step #3 above may be varied as follows:

Connect second signal generator (set at about 1000 KC.) to antenna and tune in its signal. Switch off modulation and proceed as before.

This method is somewhat preferable to the first as the zero beat setting is more easily determined when both signals are unmodulated.

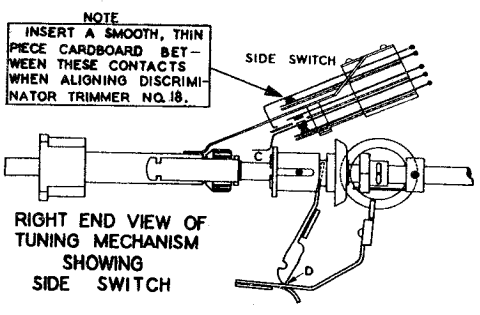

RIGHT END VIEW OF TUNING MECHANISM SHOWING SIDE SWITCH

©John F. Rider, Publisher

MODELS 1861-1869 incl.
Chassis R-186

STEWART-WARNER CORP.

AFC Data, Trimmers, Tuner Parts for Dial and Tuner Chassis R-186W Phono. Data

TESTING THE A.F.C. SYSTEM.

Connect the antenna and tune in a powerful local station. BE SURE THE TONE SWITCH IS IN THE MAXIMUM COUNTER-CLOCKWISE POSITION. Remove the cardboard that you placed between the A.F.C. contacts on the side switch when aligning. The A.F.C. is now off.

Next, detune the receiver dial until the music or speech becomes somewhat distorted. Now place a piece of smooth cardboard between the A.F.C. contacts on the side switch as shown in the illustration on the bottom of the previous page. This allows A.F.C. to function and it should improve the quality of the program.

Similarly detune the receiver dial in the opposite direction, with the cardboard removed from between the A.F.C. contacts (contacts closed). Then place the cardboard between the contacts again and check for improved quality of reception.

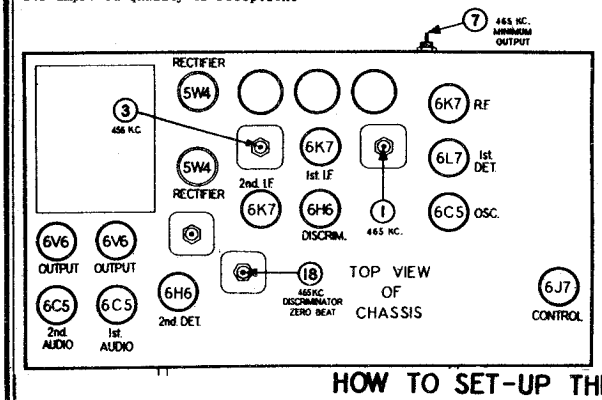

It will be noted that the correction for mistuning afforded by the A.F.C. system is not as marked at stations near the low frequency end of the dial scale as it is at the higher broadcast frequencies. This is characteristic of A.F.C. systems. However, if opening the A.F.C. contacts on the side switch (by inserting the piece of cardboard between the contacts) has no effect on the signal, or if it corrects for mistuning in one direction only, check the receiver as follows:

1. Re-align I.F., broadcast band, and discriminator trimmers.
2. Check all the tubes in the receiver. Defective 6H6 and 6J7 tubes, also the R.F., 1st Detector, and I.F. tubes may cause poor A.F.C. action.
3. If the above procedure fails to remedy the defect in A.F.C. action, check the entire A.F.C. circuit itself for possible troubles.

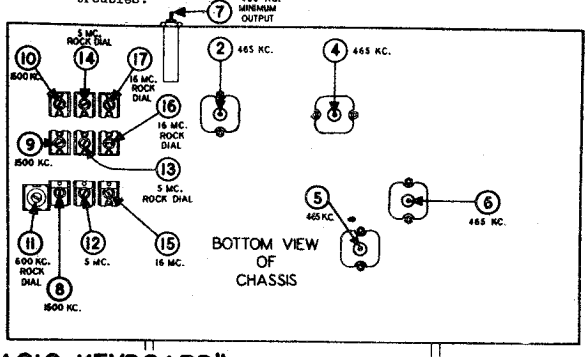

HOW TO SET-UP THE "MAGIC KEYBOARD"

SELECTING THE PROPER STATIONS: When setting up the "Magic Keyboard" select powerful nearby stations. Avoid weak or fading stations.

LABELLING THE PUSH BUTTONS: Call letter labels are supplied with each set. To label any button remove the cap of the push button, BY PULLING ON THE TOP END. Remove the black cardboard disc, and insert the call letter tab. IN REPLACING THE CAP START AT THE BOTTOM AND PRESS ON THE TOP.

STEP BY STEP PROCEDURE:

1. Connect a good outside aerial to the receiver and allow the receiver to operate for 20 minutes before setting-up.

2. Pull off the large tuning knob. As this knob is removed another small "set-up" knob on the same shaft will appear partly hidden behind the panel face.

3. Pull out this set-up knob AS FAR AS IT WILL GO.

4. Rotate the set-up knob clockwise. After dial pointer reaches the end of the dial scale continue to turn the knob clockwise until you have forced it to a definite stop. This last twist unlocks the cams.

5. Push any button you wish to set to a station. The tuner will operate and carry the pointer to some new point on the dial scale.

6. Tune the receiver to the desired station with the metal set-up knob. TUNE CAREFULLY AND WATCH THE "REACTANCE DIMMER" FOR THE POINT OF MINIMUM ILLUMINATION SO THAT THE RECEIVER WILL BE CORRECTLY TUNED TO THE STATION.

7. Push in the next button you want to set up for a station. This automatically completes the setting up of the previous station, and causes its button to pop out. Do not push in any buttons that are already set up and which you do not wish to change, since pushing a button with the cams unlocked will shift its setting.

8. Tune in the station for the button that is now depressed.

9. Set-up other buttons as desired in the same manner, that is, push in the button, tune in the station, then push in the next button.

10. To release the last button grasp the set-up knob on the station selector shaft and push it in until the last button is released. Then pull the knob out again.

11. Turn the set-up knob to the LEFT (Counter-clockwise). CONTINUE TO TURN THE KNOB TO THE LEFT even after the pointer reaches the end of the dial scale. FORCE THE KNOB COUNTER-CLOCKWISE TO A DEFINITE STOP.

12. Push the "set-up" knob back into the cabinet again and replace the large tuning knob.

13. Your "Magic Keyboard" is now ready for operation.

SELECTIVITY & TONE CONTROL SWITCH.

When the switch is in this position (clockwise), the auxiliary coils in the 1st and 2nd I.F. transformers are connected into the circuit to broaden the tuning.

All alignment and set-up operations must be made with the tone selectivity switch in one of the sharp positions.

The lower left hand knob on the receiver panel is combination four point tone control switch and selectivity control. This switch controls the tone and selectivity simultaneously. As the switch is turned clockwise the tone is varied from bass to treble. The selectivity is sharp in all positions except the maximum clockwise position (treble).

DIAL DRIVE & MISCELLANEOUS PARTS.

FOR A COMPLETE PARTS LIST SEE THE SPECIAL "MAGIC KEYBOARD" SERVICE MANUAL FORM 8529 WHICH MAY BE OBTAINED FROM STEWART-WARNER CORP.

Wherever the word RIGHT or LEFT appears in the following list, it is understood that you are standing in front of the receiver.

PART NUMBER	DESCRIPTION	LIST PRICE
111930	Band Indicator - and frame assembly	$ .40
112658	Belt - for range switch drive	.06
111261	Bolt - chassis mtg. (#14 X 1-1/4)	.03
111260	Bushing - rubber (for chassis mtg.)	.06
111892	Bushing - hard rubber, mystic mechanism mtg. to chassis	.02
111658	Clip - for pulley retaining	.01
110782	Cord - for band ind. (2 ft. required) ---- Per Ft.	.04
111302	Cord - dial drive (6 ft. lengths)	.30
111226	Escutcheon - for dial (with glass)	3.00
111227	Escutcheon - around push button opening	1.20
111865	Frame - dial, with scale	2.50
111496	Knob - tuning or volume	.20
111497	Knob - range or tone	.20
111197	Lever - for band indicator (on shaft)	.12
111370	Link & Lever - for range sw. drive (used in early production)	.20
112633	Plug - for mechanism connecting (8 prong)	.20
110496	Plug - speaker (4 prong)	.12
111859	Pointer - for dial, with slider	.18
111622	Pulley - dial cord drive	.35
111630	Pulley & Bracket - for band indicator	.10
112628	Pulley - on range switch shaft under chassis	.20
84214	Retaining Ring - for dial drum shafts	.02
89837	Retaining Spring - for retaining escut. to cabinet	.01
111222	Scale - dial	1.20
110716	Screw - band indicator pivot	.03
111116	Screw - #5 X 5/8, mystic mechanism mtg.	.02
85827	Set Screw - 6/32 square head	.02
111403	Set Screw - 8/32 fluted head	.12
112138	Set Screw - 8/32 slotted head	.03
111373	Shaft - for range switch	.08
85427	Socket - octal base	.15
110501	Socket - 4 prong (for spkr.)	.16
110627	Socket - dial lamp & automatic lamp	.12
111008	Socket - reactance dimmer lamp	.12
112630	Socket & Bracket - for elect. conn. to mech.	.75
111232	Spring - torsion for band indicator	.05
111862	Spring - drive cord tension	.03
112490	Spring - in flexible coupler	.02
111678	Stud - lower left idler pulley	.10
112667	Stud - for pulley mtg. (for top pulleys)	.10
112005	Tabs - station call letters (6 sheets)	.60
84412	Terminal Strip - phono (for Model R-186P only)	.03
85086	Terminal Strip - G.D.A.	.20
89709	Terminal Strip - phono (for Model R-186-W only)	.15
87568	Washer - embossed (for mtg. electrolytic cond.)	.05
89746	Washer - (paper) for back of knobs	.005
89027	Washers - spring for range shaft	.01
111262	Washer - flat steel mtg. (15/16" O.D.)	.02

"MAGIC KEYBOARD" PARTS LIST

FOR A COMPLETE PARTS LIST SEE THE SEPCIAL "MAGIC KEYBOARD" SERVICE MANUAL FORM 8529 WHICH MAY BE OBTAINED FROM STEWART-WARNER CORP.

PART NUMBER	DESCRIPTION	LIST PRICE
112727	Mystic Mechanism - complete with all dials - ready to mount on chassis	$60.00
111350	Mystic Mechanism only, less dial frame assembly	35.00
112428	Button Body - for tuner	.10
112545	Button Cap - for push button	.06
111878	Button Window - celluloid for push button	.01
112547	Button Reinforcing Disc - for push button	.01
111633	Button Retaining Spring - inside push button	.02
111577	Button Spring - in push button	.005
111576	Button Washer - in push button	.005
112563	Cam - bakelite - less operating arm	.10
111146	Clutch - bushing, spring and gear	.55
111137	Drive Ring - rubber	.05
111380	Motor - 6 volt 60 cycles	4.40
112354	Motor - 6 volt, 25 to 80 cycles	5.50
112736	Plug - with cable for tuner connections	.75
111138	Spring - horseshoe shaped on clutch	.02
111674	Switch Side - multiple contact (above tuning shaft)	.95
112584	Switch Back - (multiple contact)	1.25
112521	Tip - adjustable for key stop and kickout arm	.06
112483	Wrench - for fluted head set screws #6	.07
112484	Wrench - for fluted head set screws #8	.07
117468	Spring Benders	.75

PHONOGRAPH CONNECTIONS FOR MODEL R-186-W

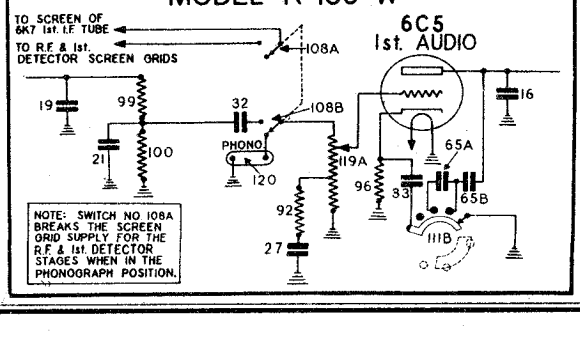

PRICES SUBJECT TO CHANGE WITHOUT NOTICE.

©John F. Rider, Publisher

©John F. Rider, Publisher

STEWART WARNER CORP. Chassis R-188 Schematic, Socket Voltage, Parts

MODELS 1881-1889 incl.

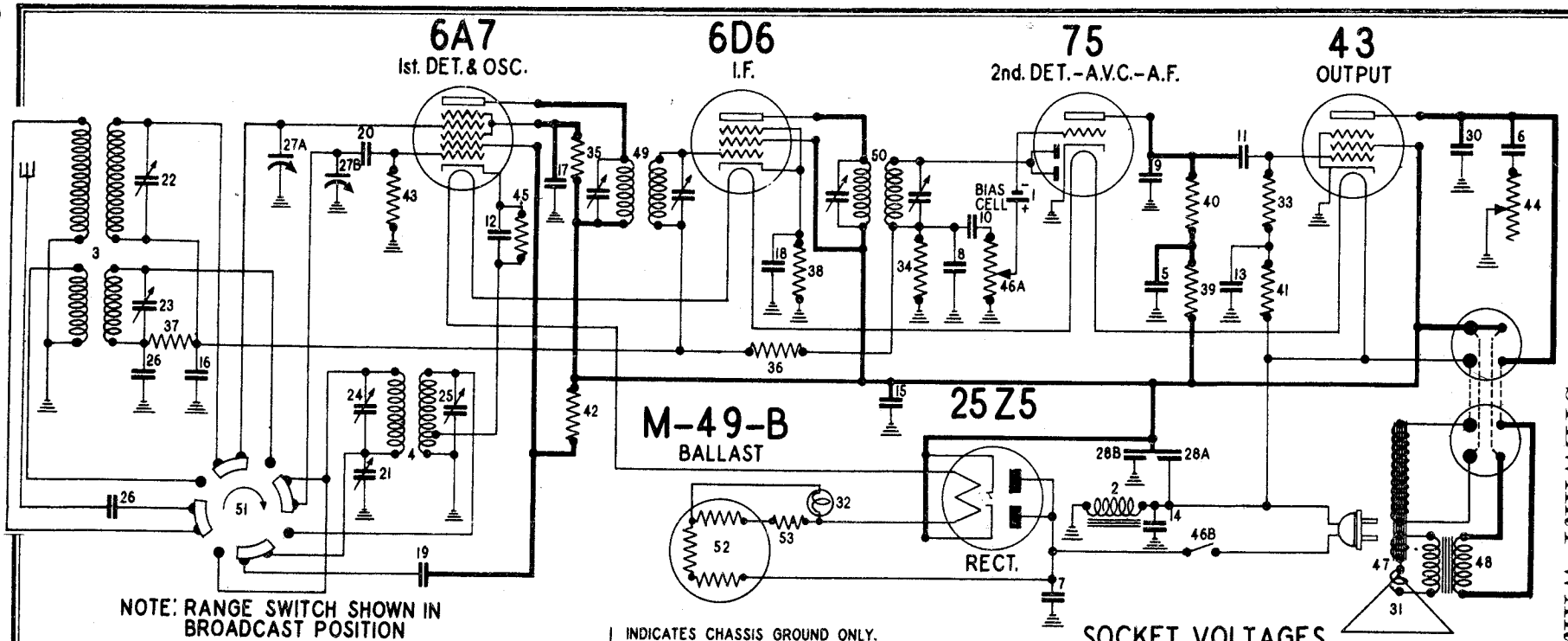

SOCKET VOLTAGES

ANTENNA GROUNDED — DIAL TUNED TO 540 KC.

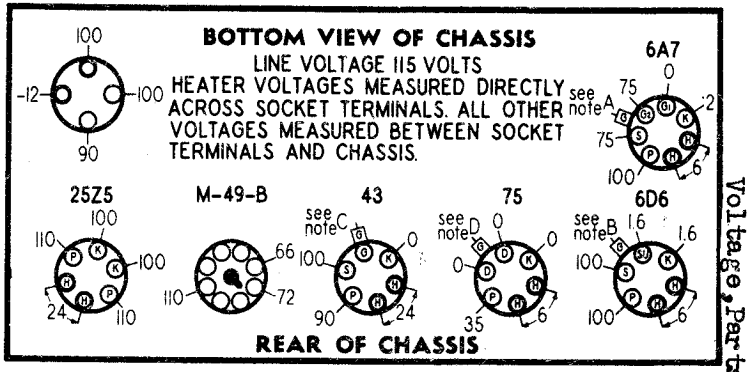

IMPORTANT: Use a high resistance voltmeter of 1,000 ohms per volt.
NOTE A: The self bias of the control grid of the 6A7 is -2 volts measured across resistor 45.
NOTE B: The self bias of the control grid of the 6D6 is -1.6 volts measured across resistor 38.
NOTE C: The bias on the control grid of the 43 is -12 volts measured across the filter choke 2.
NOTE D: The bias on the grid of the triode section of the 75 is -1 volts supplied by a bias cell. CAUTION:- Use only a very high resistance voltmeter when checking this voltage, otherwise the cell may be damaged.

INTERMEDIATE FREQUENCY 465 K.C.

MODEL R-188 PARTS LIST

DIAGRAM NUMBER	PART NUMBER	DESCRIPTION	LIST PRICE
1	89849	Cell - bias (1.25 volt)	$.22
2	112266	Choke - filter	1.50
3	112267	Coil - antenna	1.50
4	112268	Coil - oscillator	1.50
5	67297	Condenser - paper .25 mfd. 200 volt	.40
6-7	67338	Condenser - paper .05 mfd. 600 volt	.35
8-9	81157	Condenser - mica 250 mmfd.	.30
10-11-12	83437	Condenser - paper .05 mfd. 200 volt	.30
13	89962	Condenser - paper .2 mfd. 200 volt	.23
14-15-16	83974	Condenser - paper .1 mfd. 200 volt	.25
17-18			
19	84200	Condenser - mica .004 mfd.	.50
20	83109	Condenser - mica 100 mmfd.	.20
21	112048	Condenser - padding (200-600 mmfd.)	.60
22-23	112213	Condenser - trimmer (3-45 mmfd.)	.25
24-25			
26	112215	Condenser - mica .0045 mfd.	.50
27A-27B	112269	Condenser - variable gang	3.60
28A-28B	112270	Condenser - electrolytic (Sect. A-40 mfd. 150 volt) (Sect. B- 8 mfd. 150 volt)	2.40
29-30	112271	Condenser - paper .005 mfd. 400 volt	.25
31	112463	Cone & voice coil assem. for 8" spkr.	3.00
	112383	Cone & voice coil assem. for 6" spkr.	2.75
32	84056	Lamp - pilot 6.3 volt .2 amp.	.15
33-34	67282	Resistor - carbon 1/2 meg. 1/4 watt	.12
35	67580	Resistor - carbon 6000 ohms 1/4 watt	.25
36-37	67939	Resistor - carbon 1 meg. 1/2 watt	.25
38	81153	Resistor - carbon 150 ohms 1 watt	.25
39-40-41	81161	Resistor - 250,000 ohms 1/2 watt	.20
42	83285	Resistor - carbon 10,000 ohms 1/2 w.	.25
43	67280	Resistor - carbon 100,000 ohms 1/4 w.	.15
44	112056	Resistor - tone control 50,000 ohms	1.05
45	112272	Resistor - carbon 250 ohms 1/3 watt	.15
46A-46B	112275	Resistor - volume control 1/2 meg. (with on-of switch)	1.48
47	112462	Speaker - dynamic 8"	9.50
	112273	Speaker - dynamic 6"	7.50
48	112384	Transformer - output	2.00
49	112056	Transformer - 1st I.F.	2.00
50	112059	Transformer - 2nd I.F.	2.00
51	112274	Switch - range	1.05
52	M-49-B	Tube - ballast	1.25
53	112248	Resistor - wire wound 15.4 ohm 1 watt	.25

PRICES SUBJECT TO CHANGE WITHOUT NOTICE.

MODELS 1381-1889 incl.
Chassis R-1881
Alignment, Trimmers
Circuit Data

STEWART-WARNER CORP.

MODEL R-188 CHASSIS (RECEIVER MODELS 1881 to 1889)

CIRCUIT DESCRIPTION

The model R-188 chassis is a 115 volt A.C. or D.C. six tube superheterodyne receiver. It has an intermediate frequency of 465 KC.; and tuning ranges of 540 to 1720 KC.; and 5.8 to 18 MC.

The incoming signal picked up by the antenna is induced in the tuned secondary of the antenna coil and impressed upon the control grid of the 6A7 first detector and oscillator. The 465 KC. output of the 6A7 is amplified in the I.F. stage using a 6D6 tube. The amplified voltage is then impressed upon the diodes of the 75 twin diode triode tube. The two diodes are tied together and function as a linear second detector and A.V.C. The direct current voltage developed across the 1/2 megohm diode load resistor is used as A.V.C. voltage and applied to the control grids of the 6D6 and 6A7 tubes through a resistance capacity filter system.

The potentiometer type volume control 46A serves as a continuous voltage divider of the audio frequency voltage developed. Hence any portion of the audio voltage developed can be applied to the control grid of the triode section of the 75 tube. It should be noted the grid bias of the 75 tube is obtained from a bias cell. The 75 tube is now resistance coupled to the 43 power output tube. Grid bias for the output tube is obtained across the filter choke number 2.

The heaters of all the tubes in the receiver are connected in series and are supplied by a type M-49-B ballast tube. The pilot lamp supply is taken from a tapped portion of the voltage drop across the ballast tube and resistor number 53 in series. The 25Z5 tube is used as a conventional half wave rectifier. When the receiver is operated on direct current the line cord plug must be so inserted that the plates of the rectifier are on the positive side of the line. Under this condition the rectifier acts as a device passing direct current to the plates of the other tubes.

ALIGNMENT EQUIPMENT & PROCEDURE

For proper alignment, an output meter and an accurately calibrated signal generator with a tuning range from 465 KC. to 18 MC. are required.

1. Connect the output meter between the plate of the 43 tube and ground, or across the voice coil, depending on the type of meter. (The more sensitive type should be connected across the voice coil.)
2. Connect the ground lead of the signal generator to the chassis of the receiver through a .1 mfd. condenser and keep it connected in this manner throughout the entire alignment procedure. Failure to do this may have serious results as one side of the power line may be grounded in the signal generator.
3. Turn the volume control to the maximum volume position and keep it in this position throughout the entire alignment procedure.
4. With the gang condenser in full mesh set the pointer on the black horizontal line below 550 KC. on the dial.
5. Proceed to align in exactly the same order as shown in the table below.

ORDER OF ALIGN.	DUMMY ANT. IN SERIES WITH SIG. GEN.	CONNECTION OF SIG. GENERATOR OUTPUT TO RECEIVER	SIGNAL GENERATOR FREQUENCY	RANGE SWITCH POSITION	RECEIVER DIAL SETTING	TRIMMER NUMBER	TRIMMER DESCRIPTION	TYPE OF ADJUSTMENT
A	.1 MFD. CONDENSER	CONTROL GRID OF 6D6 TUBE	465 KC.	BROADCAST (Clockwise)	ANY POINT WHERE IT DOES NOT AFFECT THE SIGNAL.	1 2	2ND. I.F.	ADJUST FOR MAXIMUM OUTPUT. THEN REPEAT ADJUSTMENT.
B	.1 MFD. CONDENSER	CONTROL GRID OF 6A7 TUBE	465 KC.	BROADCAST (Clockwise)	ANY POINT WHERE IT DOES NOT AFFECT THE SIGNAL.	3 4	1ST. I.F.	ADJUST TRIMMERS 3 & 4 FOR MAXIMUM OUTPUT. THEN REPEAT ADJUSTMENT OF TRIMMERS NO. 1 & 2. SEE NOTE A BELOW.
C	400 OHM CARBON RESISTOR	ANTENNA LEAD	1700 KC.	BROADCAST (Clockwise)	1700 KC.	5	BROADCAST OSCILLATOR (Shunt)	ADJUST TRIMMER TO BRING IN SIGNAL.
D	400 OHM CARBON RESISTOR	ANTENNA LEAD	1500 KC.	BROADCAST (Clockwise)	TUNE TO 1500 KC. GENERATOR SIGNAL	6	BROADCAST ANTENNA	ADJUST FOR MAXIMUM OUTPUT.
E	400 OHM CARBON RESISTOR	ANTENNA LEAD	600 KC.	BROADCAST (Clockwise)	TUNE TO 600 KC. GENERATOR SIGNAL	7	BROADCAST OSCILLATOR (Series Pad)	ADJUST FOR MAXIMUM OUTPUT. TRY TO INCREASE OUTPUT BY DETUNING TRIMMER AND RETUNING RECEIVER DIAL UNTIL MAXIMUM OUTPUT IS OBTAINED.
F	400 OHM CARBON RESISTOR	ANTENNA LEAD	16 MC.	SHORT-WAVE (Counter-clockwise)	16 MC.	8	SHORT-WAVE OSCILLATOR (Shunt)	ADJUST TO BRING IN SIGNAL. CHECK TO SEE IF PROPER PEAK WAS OBTAINED BY TUNING IN IMAGE AT APPROX. 15.1 KC. IF IMAGE DOES NOT APPEAR REALIGN AT 16 MC. WITH TRIMMER SCREW FARTHER OUT. RECHECK IMAGE.
G	400 OHM CARBON RESISTOR	ANTENNA LEAD	16 MC.	SHORT-WAVE (Counter-clockwise)	TUNE TO 16 MC. GENERATOR SIGNAL	9	SHORT-WAVE ANTENNA (Shunt)	ADJUST FOR MAXIMUM OUTPUT. TRY TO INCREASE OUTPUT BY DETUNING TRIMMER AND RETUNING RECEIVER DIAL UNTIL MAXIMUM OUTPUT IS OBTAINED.

NOTE A: Now repeat adjustment of trimmers 3 and 4 again for greater sensitivity. This may cause oscillation. If oscillation occurs repeat steps A and B and disregard the repeat adjustment mentioned in this note.

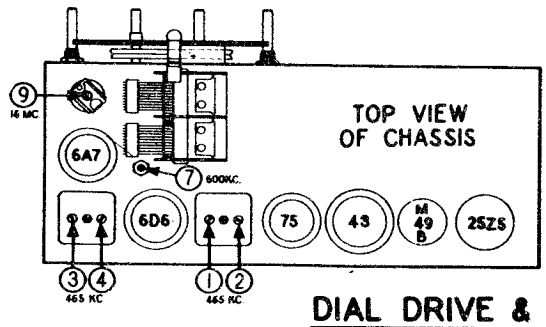

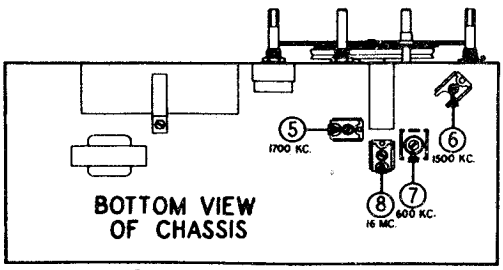

PRICES ARE SUBJECT TO CHANGE WITHOUT NOTICE

DIAL DRIVE & MISCELLANEOUS PARTS

PART NUMBER	DESCRIPTION	LIST PRICE
112065	Dial - complete assembly	$2.50
112067	Glass - escutcheon window	1.75
112068	Knob - volume, tuning, tone, band switch	$0.25
112276	Scale - dial (gold colored)	.85

©John F. Rider, Publisher

STEWART-WARNER MAGIC KEYBOARD

(USED IN MODELS 1845 to 1869)

REFER TO INDIVIDUAL CHASSIS FOR OTHER DATA.

The Mystic Mechanism with the Magic Keyboard is used on Models 1845 to 1869 Stewart-Warner radios. It is an electrically driven device for automatically tuning the receiver to any one of fifteen preselected frequencies. The receiver can be tuned either automatically or manually without the need of turning a switch.

The operating mechanism of this tuning device consists of fifteen sets each of keys, station selector cams and pawls. In addition it has two multi-contact control switches.

The back switch, mounted on the rear of the tuner, has four sets of contacts. From front to rear, they are:

1. REVERSING: for reversing the direction of motor rotation.
2. POWER: for opening and closing the motor power supply line.
3. MUTE: for killing the audio system to prevent noises during automatic tuning.
4. A.F.C.: for cutting out A.F.C. during automatic tuning.

The side switch, mounted on the right end of the tuner, has two sets of contacts. From the top down, they are:

1. A.F.C.: for cutting out A.F.C. during manual tuning and during setting up.
2. POWER: for opening and closing the motor and automatic light power supply line.

With the tuner in the manual tuning position all switch contacts are in the position shown in figure 1. As a button is pressed in, its pawl is pulled against a station selector cam. It will be noted that these cams have two different heights, that is, a high and a low side. If the pawl comes to rest against the high side of the cam, the reversing contacts on the back switch are closed to the front for one direction of motor rotation. If the pawl comes to rest against the low side of the cam, the reversing contacts close to the back for the other direction of motor rotation. The direction of rotation will always be such as to bring the notch on the cam around to the pawl by the shortest route.

Regardless of whether the pawl rests against the high o low side of the station selector cam, the bakelite cam wil close the Power, Mute and A.F.C. contacts on the back switch After these and the reversing contacts have closed, the powe contacts on the side switch close and cause the motor to run

The motor drives the mechanism to the proper positio for the desired station. Then the pawl falls into the notc on the selector cam and causes the bakelite cam to set th back switch contacts in new positions. The Power contact open, shutting off the motor. The Mute contacts open allow ing the signal to come in. The A.F.C. contacts open and A.F C. puts the finishing touch to the automatic tuning operation

A friction clutch in the gear train, driving the ca shaft, acts as a buffer and absorbs the shock of the sudde stop when the pawl falls into the notch on station selecto cam.

During automatic tuning the manual tuning shaft is dis engaged by moving the friction roller. This roller is sli away from engagement with a friction wheel as a button i pushed in. The arm that does this, also allows a kickou arm to engage a star wheel. To tune manually, a slight ro tary movement of the tuning shaft causes the star wheel t force down the kickout arm. This releases the depressed but ton and slides back the friction roller into engagement wit the friction wheel for manual tuning.

The flywheel on the back end of the tuning shaft provi- des a "spinner" action while tuning manually.

The station selector cams are prevented from turning o their shaft by an expansion and contraction type lockin mechanism. The assembly is locked when the device is ex panded or unmeshed as shown in figure 9B. Unlocking is ac complished by pulling out the set-up knob and turning i clockwise until a click is heard. This contracts the lock ing mechanism and allows the selector cams to turn on th shaft for setting up. See set-up instructions in section 45.

TROUBLE CHART

The following service chart lists the most typical troubles, gives the most likely causes, and indicates the figures and paragraphs in which information may be found to aid in correcting the troubles. While this chart is necessarily incomplete, its careful study will enable the serviceman to diagnose most of the service complaints he receives on the Mystic Mechanism.

No reference is made to failures of the Mystic Mechanism when such failures are due to broken leads, loose connections etc. It must be borne in mind, however, that certain indications are common to both radio and tuner troubles. For examples, Automatic Frequency Control may not be functioning because of improper contact adjustment of the tuner switches or because of an electrical defect in the chassis. Therefore when servicing the tuner, check the possibilities of radio troubles causing the same symptoms.

BUTTON DOES NOT STAY IN OR DOES NOT RELEASE

COMPLAINT	PROBABLE CAUSE	FOR REMEDY SEE
Button will not stay in when pushed in.	Kickout pointer tip improperly adjusted.	Section 34.
	Kickout spring bent down too far.	Section 35.
	Insufficient tension in key stop bar return spring.	Section 35.
	Jammed or stuck key stop bar.	
	Star wheel stuck or not moving freely on tuning shaft.	Section 37.
	Bent or sprung key stop bar.	
Depressed button does not release when another button is pushed in.	Kickout tip jams against star wheel.	Section 36.
	Stuck or jammed pawl.	Sections 25, 26 and 36.
	Stuck or jammed key.	
Depressed button will not release when tuning knob is turned.	Kickout tip not engaging star wheel.	Section 34.
	Also check those listed for previous fault.	Section 36.

POINTER DOES NOT MOVE WHEN BUTTON IS PUSHED

Motor hums but does not run.	Reversing contacts on back switch not closing.	Secs. 1 & 3 or 1 & 9
	Motor stalled due to mechanical overload and clutch not slipping.	Secs. 20 and 22.
	Defective motor.	
	Low line voltage or improper frequency	Section 49.
Motor runs but pointer does not move.	Clutch slipping.	Sections 20, 21 & 22.
	Pointer drive gear slipping on shaft or out of mesh.	Section 52.
	Pointer loose on cord.	
	Pointer sticking on guide rail due to rust.	
Motor does not hum and tuner does not move with button in.	Power contacts on back switch not closing	Secs. 1,4,5, or 1,10,11.
	Power contacts on side switch not closing	Sections 14, 15 & 16.
	Bakelite back switch operating cam binding on contact arms or out of position.	Section 13.

RNER CORP.

MAGIC KEYBOARD
Notes, Trouble Chart

POINTER MOVES BUT DOES NOT TUNE STATION PROPERLY

COMPLAINT	PROBABLE CAUSE	FOR REMEDY SEE
Pointer stops at wrong point.	Improper setting-up of mechanism.	Sections 44, 45, 46 and 47.
	Not locked up tight.	
Pointer stops at proper point, but	Mute contacts on back switch not opening. (No noise will be heard in this case).	Secs. 1 & 5 or 1 & 11
	Tuning backlash.	See "Tuning Backlash" below.
(A) No signal is heard.	Gang condenser drive gears out of mesh or slipping on shaft.	Section 52.
	Flexible coupling slipping on shaft.	
	Station not broadcasting or signal too weak as in daytime or during period of fading.	
(B) Signal is not heard clearly.	A.F.C. contacts on back or side switch not opening.	1,5,17,57 or 1,11,17, 57.
	A.F.C. not functioning.	Sections 55 to 57.
	Weak signal or no aerial.	Section 44.
(C) Wrong station comes in.	Desired signal off, weak or faded.	Section 44.
	Not set up properly.	Sections 44, 45, 46 and 47.
	Set off calibration.	Sections 51 and 54.
(D) Motor continues to run.	Pawl does not fall far enough into station selector cam to cut power off.	Burrs on pawl or cam. Sticking pawl.
	Power contacts on back switch not adjusted properly.	Sections 1, 4, 5 or 1, 10, 11
Pointer stops at a different place each time for a certain button.	Mechanism not locked up tight.	Sections 31 and 44g.
	Dial pointer slipping on cord.	Section 53g.
	Left end bearing bracket loose.	Sections 54 and 60.
	Pointer drive gears slipping out of mesh or on shaft.	Sections 52.
	Loose set screw.	
Pointer stops off station occasionally.	Pointer backlash. (Note pointer backlash will cause apparent rather than actual mistuning.)	Section 60.
	Pawl does not fall far enough into station selector cam.	Sec. 1 & 5a, 1& 11a, and 24
Pointer goes to end of dial and motor stalls and hums, or continues to run by slipping the clutch.	Station selector cam turned around beyond its normal operating range.	Section 27.
	Reversing contacts on back switch not adjusted properly.	Secs. 1 & 3 or 1 & 9.
	Bakelite cam binding on contact arm or out of position.	Section 13.
Motor continues to operate, moving the pointer back and forth over a short distance, after tuning to the approximate frequency to which the button is set.	Reversing contacts on back switch are not adjusted properly - set too close.	Secs. 1 & 3 or 1 & 9.
Motor starts before button is pushed in far enough to catch.	Side switch power contacts are being closed too soon.	Section 16.
Motor starts in the wrong direction then corrects itself as the button is pushed the rest of the way in.		
Intermittent operation of motor, lights, etc.	Insufficient contact pressure or dirty contacts on back or side switch.	Sections 3a, 4b and 15 or 9a, 10b and 15.
	Loose silver contact in contact blade of switches.	
	Bakelite cam binding on contact arms or out of position.	Section 13.
Tuning backlash. (Note: the high tuning ratio greatly exaggerates the effect of most of these conditions.)	Clutch slips.	Sections 21 and 22.
	Play between gang condenser drive gears due to insufficient compression in thrust spring in flexible coupling.	Sections 41 and 42.
	Play between gears due to improper setting of anti-backlash springs.	Section 40.
	Play between gear and stud.	
	Gear stud loose.	
	Gang condenser sways.	Section 59.
	Loose set screw in coupling or gear.	
	Loose or worn bearings.	
	Friction roller rotates relative to tuning shaft.	
Calibration incorrect.	Dial pointer or gang condenser drive gears jump teeth, slip on cam shaft or out of mesh.	Sections 42 and 52.
	Loose set screw in gear or coupling.	
	Dial pointer slips on dial cord.	Section 53g.
	Left end bearing bracket loose.	Sections 54 and 60.
	Excessive pointer backlash.	Section 60.

MAGIC KEYBOARD
Trouble Chart, Back Switch

STEWART-W

MANUAL TUNING DIFFICULTIES

COMPLAINT	PROBABLE CAUSE	FOR REMEDY SEE
Set tunes very broadly	A.F.C. contacts on side switch not closing.	Section 17.
Tuning knob sticks and catches in going from automatic to manual tuning.	Burrs on tip of kickout arm and star wheel.	Sections 38 and 61.
	Adjustable tip of kickout arm set improperly.	Section 34.
Pointer does not move when tuning knob is turned, although works OK in automatic position.	Oil or grease on drive rubber on friction wheel.	Section 58.
	Jammed bar and arm assembly.	
	Insufficient tension in bar and arm assembly return spring.	Section 58.
Pointer does not move when tuning knob is tuned.	Bent tuning shaft.	
	Oil or grease on drive rubber of friction wheel.	Section 58.
	Jammed bar and arm assembly.	
	Insufficient pressure between friction wheel and friction roller.	Section 58
	Gear driving dial cord drum is out of mesh or slipping on shaft.	Section 52.
	Slipping clutch.	Sections 21 and 22.

DIFFICULTIES OCCURRING DURING SET-UP BUT NOT IN NORMAL OPERATION

Set tunes very broadly.	A.F.C. contacts on side switch not closing when set-up knob is out and a button is in.	Sec. 17 & Fig. 7.
Button does not release when set-up knob is worked in or out.	Kickout spring set too far from kickout arm.	Section 35.
Visual tuning indicator off or flickers on and off. (This applies only to chassis with visual indicator wired to side switch. See section 14.)	Improper adjustment of side switch.	Section 15.
Automatic light off or flickers on and off.	Loose silver contact on contact blade.	
Mechanism locks up during setting up of a station.	Was not completely unlocked.	Section 30.
	Defective locking mechanism.	Section 32.
	Station selector cam sticking.	Section 32.
	Turning the set-up knob too suddenly.	Section 32.

MISCELLANEOUS TUNER TROUBLES

During automatic tuning visual tuning indicator light is on or flickers on and off. (Applies only to chassis with visual indicator wired to side switch. See section 14.)	Improper adjustment of side switch.	Sections 14 and 15.
	Loose silver contact in switch blade.	
Dial and automatic lights go out and set is killed momentarily when a button is pushed in or released.	Both reversing contacts on back switch closed at once and shorting 6 volt winding of power transformer.	Section 3a or 9a.
	Short operating arm of side switch grounding against friction roller assembly at point C.	Figure 5A.
Gears noisy during automatic tuning.	Motor pinion and first reduction gear not meshing properly.	Section 39.
	Too much compression in anti-backlash springs in gears.	Section 40.
	Burrs, bent teeth, and other irregularities on gears, especially the higher speed ones.	
Black ground lead near 6H6 tube under chassis heats up and smokes.	Short operating arm of side switch grounding against friction roller assembly at point C.	Figure 5A.
	A short between hot B-V. line and chassis.	
	Tuning shaft bearing stop out of place and grounding power blade of side switch.	Section 48.
Slight hum when button is depressed - not heard when button is released.	Poor or defective discriminator tube.	Change discriminator (6H6) tube.
Short in wiring when turning set-up knob.	Tuning shaft bearing stop out of place grounds power blade of side switch.	Section 48.
Signals are heard when tuning from one station to another automatically.	Mute contact on back switch not closing or making poor contact.	Sections 4b or 10b.
Set noisy electrically when starting and stopping during automatic-tuning.	Set used with insufficient antenna or mute contacts on back switch closing too late and opening too soon.	Reduce spacing between mute contacts on Back Switch. (Figure 4).
Mechanism reaches a definite stop before the pointer reaches either end of the dial.	The cam assembly stop pin and the gang condenser stops are not set so they reach their respective stop points at approximately the same time.	Section 51.
Band indicator hangs up when changing ranges.	Knot on band indicator cord jams against visual tuning indicator light bulb.	
	Torsion spring slipped out of place.	
	Link on range switch over dead center.	

©John F. Rider, Publisher

ADJUSTMENT OF THE BACK SWITCH

THE SUCCESSFUL OPERATION OF THE ENTIRE MECHANISM DEPENDS TO A LARGE DEGREE ON THE CORRECT ADJUSTMENT OF THE BACK SWITCH: For this reason it is highly important that all contacts be set exactly right.

Two different types of Back Switches, and associated Bakelite Operating Cams, have been used. To determine whether the Switch is of the early or later type, notice the shape of the Bakelite Cam. The shape of the Bakelite Cam used on early units is shown in figure 1A; on later units it is shaped as in figure 1B. The various operating positions of the early type are shown in figures 1A, 2A, 3A and 4A. The positions of the later type are shown in figures 1B, 2B, 3B and 4B. Details of the correct settings for the early type are explained in sections 2 to 6. Details of the correct settings for the later type are explained in sections 8 to 12. MINOR ADJUSTMENTS OF THE BACK SWITCH TO SECURE THESE SETTINGS MAY BE MADE BY BENDING THE VARIOUS BLADES OF THE SWITCH.

EARLY TYPE BACK SWITCH

2 Run the dial pointer to 530 KC. Turn the power off. With the mechanism in the manual position, the Back Switch Operating Arms should clear the Bakelite Cam by the amounts indicated in figure 1A. Push any button so that the Pawl falls on the high side of the Station Selector Cam. The Reversing Contacts Operating Arm should clear the Bakelite Cam as indicated in figure 2A. IF THESE CLEARANCES ARE APPROXIMATELY CORRECT, PROCEED WITH SECTION 3. However, if the clearances are not as shown, slight discrepancies can be corrected by bending the Arms, but if the entire switch seems to be out of position, loosen the Bracket Mounting screws (Figure 2A) and move the entire Back Switch assembly to give the proper clearances.

3 Release any depressed buttons. Move the Bakelite Cam up and down by hand to make sure that the Reversing Contacts make and break properly as follows. These are the three short switch blades nearest the Bakelite Cam.

a. With the Bakelite Cam down as in figure 2A, the center contact should make with the front contact, while with the Bakelite Cam pulled up as in figure 3A, the center contact should make with the back Reversing Contact. After the instant of closing the blades should move slightly to show adequate contact pressure. IMPORTANT: Make sure that the center contact is not touching both the front and back contacts at any one time, since this may short circuit the 6-volt winding of the power transformer. If the Reversing Contacts do not make or break properly, bend the switch blades to secure proper operation.

b. With the dial pointer at 530 KC. push each button and make sure that the Reversing Contacts Operating Arm does not touch the Bakelite Cam. See figure 2A. The Pawl, in every case, should rest on the High Side of the Station Selector Cam.

c. Now pull out the Set-up Knob and run the pointer to the high frequency end of the dial by turning the Set-up Knob clockwise. Push each button to make sure that the center contact closes with the back Reversing contact. See figure 3A. In every case the Pawl should rest on the Low Side of its cam.

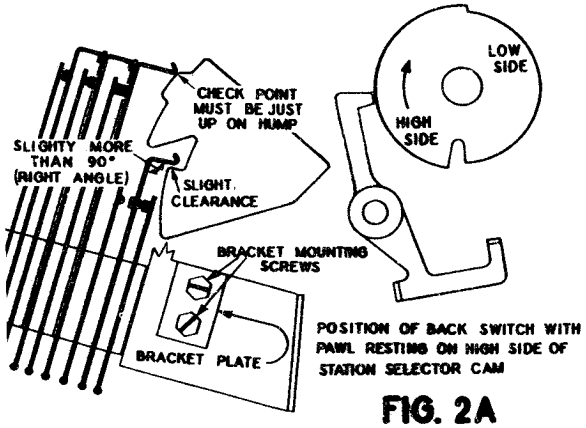

POSITION OF BACK SWITCH WITH PAWL RESTING ON HIGH SIDE OF STATION SELECTOR CAM

FIG. 2A

4 Turn the Tuning Knob to release the depressed button. This puts the Bakelite Cam in the position shown in figure 1A. the Power, Mute and A.F.C. contacts of the Back Switch can be checked as follows:

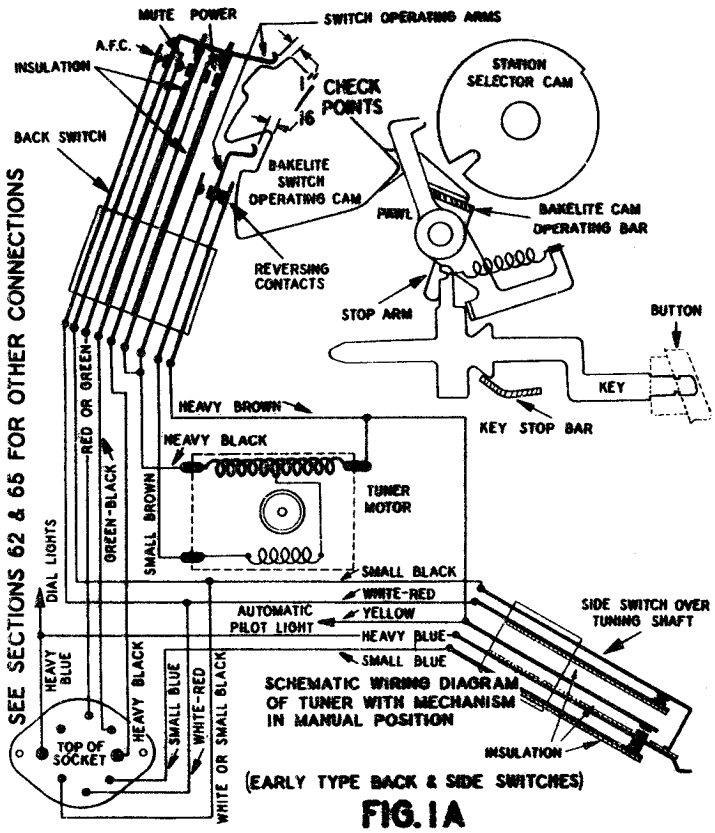

(EARLY TYPE BACK & SIDE SWITCHES)

FIG. 1A

a. The long Mute blade should barely hold the thin bakelite strip against the Power blade, and the long A.F.C. blade should barely hold the thin bakelite strip against the Mute blade.

b. All three sets of contacts should be open approximately 1/64 to 1/32 of an inch. Move the Bakelite Cam up and down by hand and observe the action of the contacts. As the Bakelite Cam is moved up (to the position of figures 2A or 3A) all three sets of contacts should close. After the instant of closing the blades should move slightly to show adequate contact pressure.

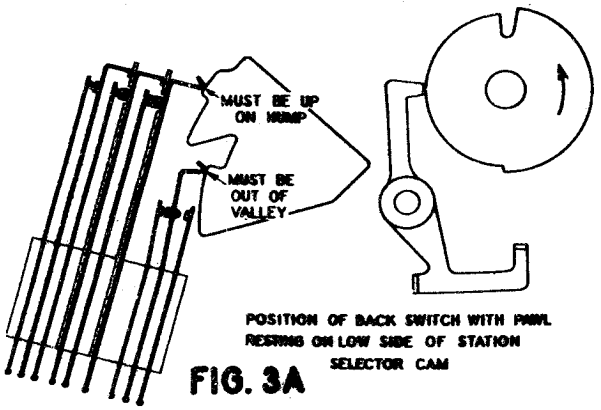

POSITION OF BACK SWITCH WITH PAWL RESTING ON LOW SIDE OF STATION SELECTOR CAM

FIG. 3A

5 To finish checking the setting; pull out the Set-up Knob, unlock the Cam Assembly by turning the Set-up Knob clockwise as far as it will go. A slight click should be heard as the mechanism is unlocked. Then proceed as follows:

a. Run the dial pointer to the low frequency end of the dial. Push any button so that the Pawl falls on the High Side of the Station Selector Cam. The upper Back Switch Operating Arm should rest just up on the "Hump" of the Bakelite Cam, at the "Check Point" shown in figure 2A. If the Operating Arm is not in this position, bend the Arm slightly to secure such setting. If the Operating Arm is down off the "Hump", the Power, Mute or A.F.C. contacts may remain closed after a station is tuned in. If

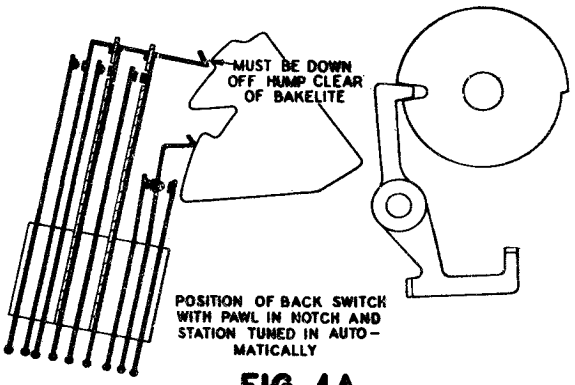

FIG. 4A

the Operating Arm is farther up on the "Hump", the Power contacts may open and cut the power off before the Pawl falls completely into the Notch.

b. Turn the Set-up Knob until the Pawl of the depressed button falls into the Notch on the Station Selector Cam. The Power, Mute and A.F.C. contacts should now be open at least 1/64 inch as shown in Figure 4A.

c. Repeat step 5a. with each of the other buttons then repeat step 5b. with each button. Due to slight variations in the Pawls, it may not be possible to adjust for all buttons so that the Back Switch Operating Arm comes exactly at the "Check Point" but make sure that the Power, Mute and A.F.C. contacts are open at least 1/64 of an inch for each button when the Pawl is in the Notch. Notice, too, that the bending of any switch blade or operating arm may throw out a preceding adjustment. For this reason it is well to check through the entire adjustment procedure a second time.

6 Lock up the Cam Assembly by turning the Set-up Knob as far counter-clockwise as possible. Turn on the power and check the operation of the unit.

REPLACING EARLY TYPE BACK SWITCH

7 If it is necessary to replace the early type Back Switch with the later type, since we stock only the later type, part number 112564, it will also be necessary to change the Bakelite Cam to the later type, part number 112563. To make this change proceed as follows:

a. File off the two rivets holding the Bakelite Cam to its arm.

b. Put the new Cam in place and secure with two 6/32 machine screws.

c. Remove the two screws holding the Back Switch to its bracket and transfer the wires from the old switch to corresponding terminals on the new switch.

d. Fasten the new switch in place and adjust as described in sections 8 to 12.

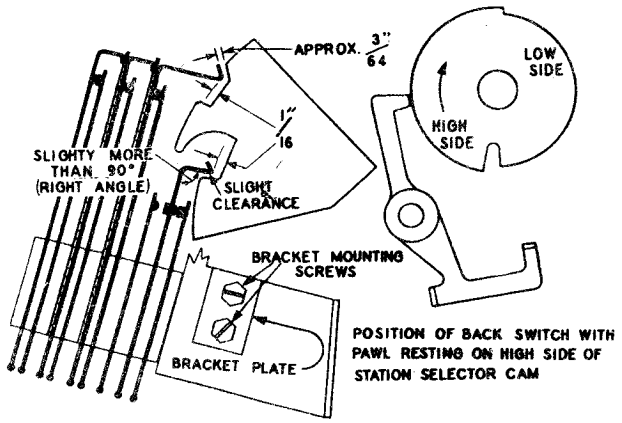

FIG. 2B

LATER TYPE BACK SWITCH

8 Run the dial pointer to 530 KC. Turn the power off. Push any button so that the Pawl falls on the High Side of the Station Selector Cam. The Back Switch Operating Arms should clear the Bakelite Cam by the amounts indicated in figure 2B. IF THE CLEARANCES ARE APPROXIMATELY CORRECT, PROCEED WITH SECTION 9. However, if the clearances are not as shown, slight discrepencies can be corrected by bending the Arms, but if the entire switch seems to be out of position, loosen the Bracket Mounting Screws (see figure 2B) and move the entire Back Switch assembly to give the proper clearances.

9 Move the Bakelite Cam up and down by hand to make sure that the Reversing Contacts make and break properly as follows. These are the three short switch blades nearest the Bakelite Cam.

a. With the Bakelite Cam down as in figure 2B, the center contact should make with the front contact, while with the Bakelite Cam pulled up as in figure 3B, the center contact should make with the back Reversing Contact. After the instant of closing the blades should move slightly to show adequate contact pressure. IMPORTANT: Make sure that the center contact is not touching both the front and back contacts at any one time, since this may short circuit the 6-volt winding of the power transformer. If the Reversing Contacts do not make or break, bend the switch blades to secure proper operation.

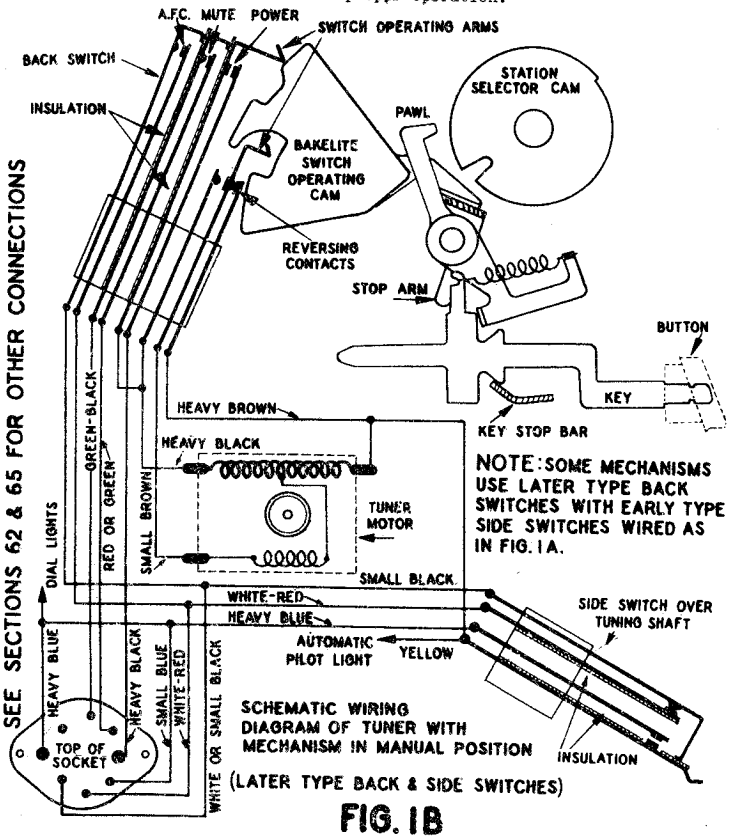

FIG. 1B

b. With the dial pointer at 530 KC. push each button and make sure that the Reversing Contacts Operating Arm does not touch the Bakelite Cam. See figure 2B. The Pawl, in every case, should rest on the High Side of the Station Selector Cam.

c. Now pull out the Set-up Knob and run the pointer to the high frequency end of the dial by turning the Set-up Knob clockwise. Push each button to make sure that the center contact closes with the back Reversing Contact. In every case the Pawl should rest on the Low Side of the cam. See figure 3B.

10 With the Pawl still resting on the Low Side of the Station Selector Cam, the Power, Mute and A.F.C. contacts of the Back Switch are to be checked as follows:

a. Leave the Bakelite Cam in the Position of figure 3B. The long Mute blade should barely hold the thin bakelite strip against the Power blade, and the long A.F.C. blade should barely hold the thin bakelite strip against the Mute blade.

b. Move the Bakelite Cam up and down by hand and observe the action of the contacts. With the Bakelite Cam up as shown in figure 4B all three sets of contacts should be open approximately 1/32 of an inch. As the Bakelite Cam is moved down (to the position of figure 3B) all three sets of contacts should close. After the instant of closing the blades should move slightly to show adequate contact pressure.

©John F. Rider, Publisher

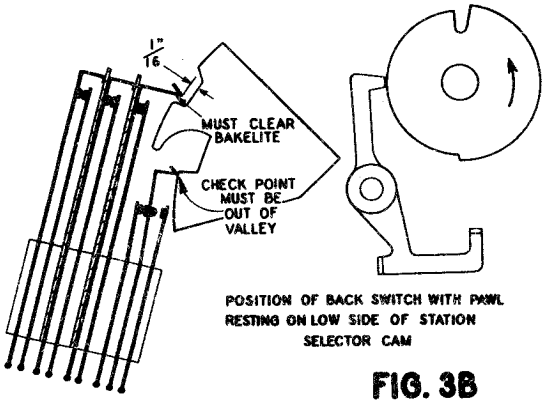

FIG. 3B

11 To finish the checking Pull out the Set-up Knob. Unlock the Cam Assembly by turning the Set-up Knob clockwise as far as it will go. A slight click should be heard as the mechanism is unlocked. Then proceed as follows:

a. Push any button. Turn the Set-up Knob until the Pawl drops into the Notch on the Station Selector Cam. The upper Back Switch Operating Arm should rest just up out of the "Valley" on the Bakelite Cam (See "Check Point" on figure 4B), and

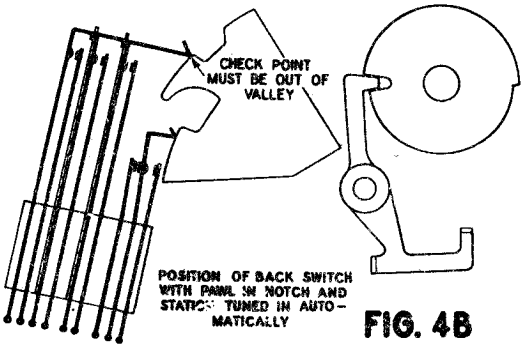

FIG. 4B

the Power, Mute and A.F.C. contacts should be open at least 1/32 of an inch. If the Operating Arm is not out of the "Valley" far enough to open the contacts properly, bend the Operating Arm down slightly. If the Operating Arm is farther out of the "Valley" than indicated by the "Check Point", the Power contacts may open and cut the power off before the Pawl falls completely into the Notch. If the Operating Arm does not come out of the "Valley" far enough, the Power, Mute or A.F.C. contacts may remain closed after a station is tuned in.

b. Repeat the above step for each of the other buttons. This is important. Due to slight variations in the Pawls, it may not be possible to adjust for all buttons so that the Back Switch Operating Arm comes exactly at the "Check Point" of figure 4B, but make sure that the Power, Mute and A.F.C. contacts are open at least 1/32 of an inch for each button, when the Pawl is in the Notch. Notice, too, that the bending of any switch blade or operating arm may throw out a preceding adjustment. For this reason it is well to check through the entire adjustment procedure a second time

12 Lock up the Cam Assembly by turning the Set-up Knob as far counter-clockwise as possible. Turn the power on and check the operation of the unit.

BAKELITE SWITCH OPERATING CAM

13 The Bakelite Cam may stick because of improper adjustment of the Back Switch. The clearances shown in figures 1A or 1B should be maintained. This prevents too much pressure by the Back Switch Operating Arms against the Bakelite Cam. See paragraph 4a or 10a. Other causes for the Bakelite Cam to stick are; rough edges on the Bakelite, and insufficient tension in the Bakelite Cam Return Spring (figure 13). Tension in the Return Spring may be increased, if found necessary, by simply cutting off a few turns and forming a new hook on the end.

The Stop Arm (figure 1B) on the bar carrying the Bakelite Cam, should hit against the Rubber Stop (figure 14). This keeps the Bakelite Cam from jumping too high and catching over the Reversing Contact Arm. If this Rubber Stop is missing, a couple of turns of friction tape around the shaft will serve the same purpose.

SIDE SWITCH ADJUSTMENT

14 There are two general types of Side Switches, namely the early type with five blades and the later type with only four blades. The Side Switch change was made after the Back Switch change, so that there are units equipped with the early Side Switch but with later type Back Switch.

The extra blade in the early Side Switch was used to switch the Visual Tuning Indicator light on during Manual tuning and off during Automatic Tuning. With the later Side Switch this light remains on during both Manual and Automatic tuning. In addition, with the later side switch the 6 volt line and Motor-Automatic light circuit wires were reversed. See figure 1A and 1B for circuit difference.

15 With the power off, adjust to secure the making and breaking of the contacts as illustrated. FOR EARLY TYPE SIDE SWITCH REFER TO FIGURES 5A, 6A AND 7A. FOR LATER TYPE SIDE SWITCH REFER TO FIGURES 5B, 6B and 7B. After the instant of closing the blades should move slightly to show adequate contact pressure. For some adjustments it may be better to bend the Long or Short Switch Operating Arms instead of the Switch blades.

CONCLUDED ON NEXT PAGE

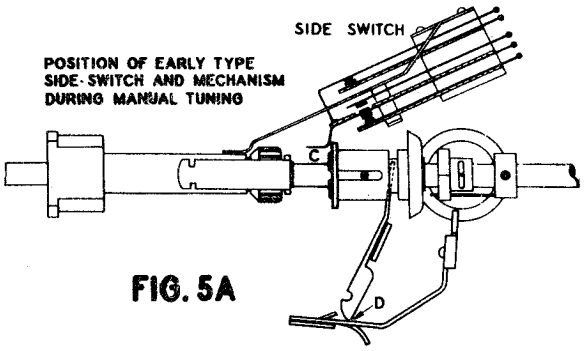

FIG. 5A

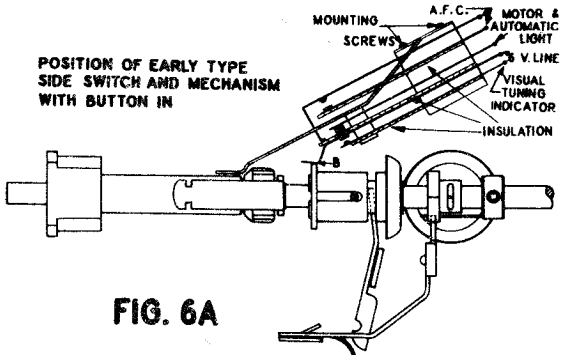

FIG. 6A

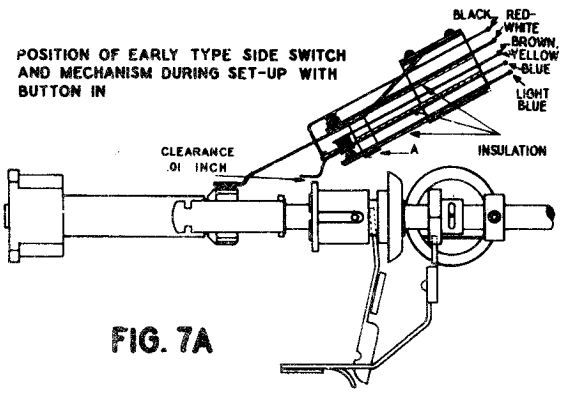

FIG. 7A

MAGIC KEYBOARD
Clutch, Pawls, Cams, Keys
Cam lock, Bar and Arm

STEWART-W

16 IT IS IMPORTANT THAT THE MOTOR CONTACTS ON THE SIDE SWITCH DO NOT CLOSE UNTIL AFTER THE REVERSING CONTACTS OF THE BACK SWITCH CLOSE. To secure such sequence of contact closing, the bakelite ring on the Friction Roller Assembly (figure 13) should not come farther forward, under the Short Operating Arm of the Side Switch, than shown at point B, figure 6. If loosening the Switch Mounting Screws does not permit enough movement of the switch to secure this positioning, it may be necessary to bend the Short Switch Operating Arm.

17 Care must be taken that the Automatic Frequency Control contacts on the Side Switch are open during automatic tuning and closed during manual tuning. If they are open when tuning manually the set will appear to tune broadly. The A.F.C. Contacts must be closed during setting up, or the Station Selector Cams may be set improperly. If the A.F.C. contacts do not open when tuning automatically, mistuning by the mechanism will result in poor tone quality. In extreme cases of mistuning the station may not be heard at all.

18 When tuning automatically or during set-up, if the automatic Light does not come on and the Motor does not move or the Automatic Light flickers, bend the Side Switch blade, third from the top, down a little. If the blade is bend down too far the light will remain on all the time, even during manual tuning. Also the sequence of contact closing mentioned in section 16 will not be obtained.

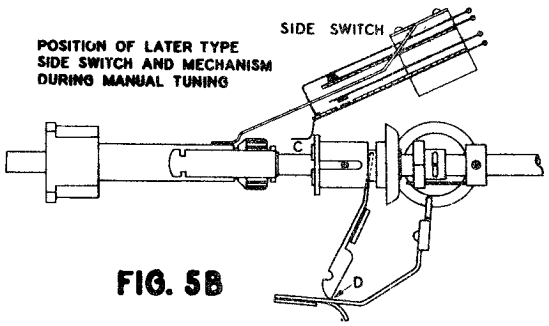

FIG. 5B

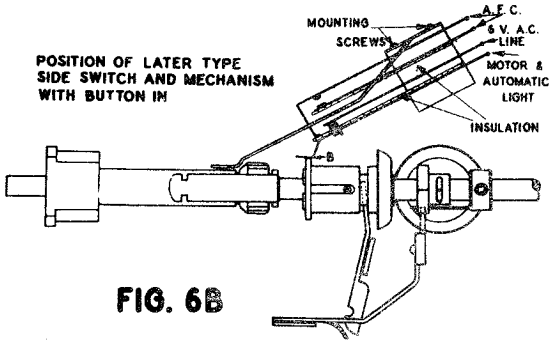

FIG. 6B

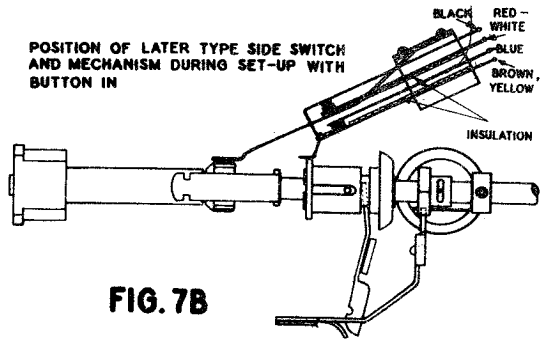

FIG. 7B

19 If the Visual Tuning Indicator Light flickers or goes out during set-up, when a button is pressed, the following may be the cause. The bakelite ring on the Friction Roller Assembly is probably lifting the Short Side Switch Operating Arm, causing it to open the Visual Tuning Indicator circuit. There should be a very slight clearance, about .01 of an inch, between the bakelite ring and the Operating Arm during set-up, with a button in, as shown in figure 7A. Either the end of the Long Switch Operating should be bent down, so it will press harder against the Set-up Gear, or the lifting hook (A, figure 7A) should be bent up slightly.

CLUTCH

20 The Clutch is purely a friction device. It is a standard anti-backlash gear held on a Collar by a flat, horseshoe shaped Spring Washer as shown in figure 8. The frictional resistance between Spring and Collar and the Gear normally can transmit enough power to drive the Cam Shaft, Dial Pointer and Gang Condenser. If an abnormal load is placed on the Clutch it should slip. If the Clutch becomes locked or stuck so it cannot slip when overloaded, other parts of the mechanism may be damaged because of the absence of the "shock absorber" action of the Clutch.

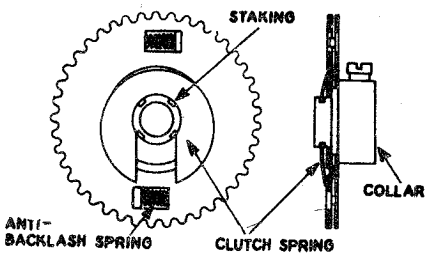

FIG. 8

21 THE CLUTCH MAY SLIP BECAUSE IT IS FULL OF OIL OR GREASE OR THE HORSESHOE SHAPED SPRING HAS CRACKED OR WEAKENED. If oil or grease is present, wash it off with carbon tetrachloride or similar cleaning fluid. The Spring can be slipped out and replaced without any dismantling of the mechanism. NOTICE THAT THE SET SCREW IN THE CLUTCH MUST BE SO POSITIONED, IF THE CLUTCH IS MOVED OR REPLACED, THAT IT WILL NOT JAM AGAINST THE SET-UP CROWN GEAR. Sometimes the Clutch may slip because the Pawl, although falling far enough into the Notch on its Station Selector Cam to prevent the shaft from rotating, does not fall far enough to operate the Back Switch and cut the power off. Check the Back Switch adjustment as outlined in sections 4 to 6 if an early type Back Switch is used, or sections 10 to 12 if the later type Back Switch is used. Also remove any rough edges from Pawl and Notch with emery cloth or a small oil stone.

22 OVERLOAD ON THE CLUTCH MAY ARISE FROM ANY ONE OR COMBINATION OF THE FOLLOWING CAUSES:

a. Binding of the Dial Pointer against the Dial, Dial Frame or cabinet, or rough, rusty or bent Dial Pointer Guide Rail.

b. Dial Pointer drive cable too tight.

c. Jammed or stuck dial cord guide pulley or pulleys.

d. Crossed dial cord on the Drum. Re-thread the dial cord correctly as shown in figure 11 and section 53.

e. Dial Cord Drum binding against Driver Gear or stuck on shaft.

f. The Pointer Driver Gear (figure 15) out of mesh and binding against the Drum Gear. Set Driver Gear to mesh with center of face of gear on Drum and check end play in Cam Shaft (See section 52.)

g. Misalignment or tight Cam Shaft Bearings. Loosen the screws holding the End Bearing Bracket (figures 10 and 15). Hold the Knurled Gears (figure 10) out of mesh by compressing the Flexible Coupling. Rotate the Cam Shaft back and forth a few times to permit the bearings to realign themselves. Then tighten the screws, taking care not to shift the Brackets while doing so. Be sure that both Right End Bearing Bracket Mounting Screws are tight, otherwise dial calibration cannot be maintained. Binding or tightness in the inner bearings is usually the result of sprung End Brackets, which should be straightened.

h. Cam Shaft sprung or bent. In most cases it will be necessary to replace the whole unit.

i. Collar on left end of Cam Shaft (figure 14) binding against Left End Bracket. Push the Cam Shaft as far to the left

©John F. Rider, Publisher

as it will go. Loosen the Collar Set Screw and reset the Collar so it will have from .006 to .010 of an inch clearance between it and the Left End Bracket.

j. Set-up Crown Gear assembly binding (Fig. 13).

k. Gang Condenser Drive Gears out of mesh and binding (figure 10).

l. Thrust Spring in Flexible Coupling compressed too much. The Thrust Spring should exert just enough pressure on the Condenser Drive Gears (Fig. 10) to prevent backlash.

m. Extension Shaft out of line and binding (Fig. 10).

n. Tight, jammed or sticking Gang Condenser.

If correcting the above conditions does not stop the Clutch from slipping replace the Clutch Spring, part number 111138. In extreme cases it may be necessary to replace the entire Clutch Assembly as indicated below.

23 TO REMOVE THE CLUTCH PROCEED AS FOLLOWS:
a. Remqve the L shaped horizontal brace on the back of the Dial Frame. This is the part supported by the brackets screwed to the sides of the chassis.

b. Take the Side Switch Mounting Screws out and swing the switch out of the way.

c. Drive out the pin through the Friction Roller Assembly (Figure 13). Pull out the pin in the Star Wheel. Loosen the set screws in the Star Spring Collar and Flywheel. The Tuning Shaft can now be pulled out. (NOTE that there is a groove around the tuning shaft. The Set Screw of the Star Spring Collar fits into this groove, thus fixing the lateral position of the shaft with respect to the End Bracket.)

d. Take the Set-up Knob off. Remove the Tuning Shaft Bearing and pull the Sleeve and Set-up Gear out of the End Bracket.

e. Take the Retaining Ring off the Set-up Crown Gear Stud and remove the Crown Gear Assembly.

f. Remove the Right End Bearing and Bracket (Figure 10).

g. Take the Knurled Crown Gear off the Extension Shaft (Figure 10).

h. Loosen the Clutch Set Screw, disassemble the Clutch and slide the Collar and Gear Sections off the Cam Shaft to the right.

PAWLS

24 If a Pawl does not fall completely into the Notch on the Station Selector Cam, check the setting of the Back Switch. It is probable that the Power contacts are opening too soon. Notice that in order to fall into the Notch, the Pawl must work against the bar carrying the Bakelite Cam. Anything that makes this Bar operate hard should be corrected. See that the end of the Pawl and Notch on the Station Selector Cam are smooth and free from burrs. Then try closing up the Power contacts on the Back Switch a little more, but only after checking the above points. This may be done by bending the Power blade so the Power contacts are closer together, when the Bakelite Cam is in the position shown in figure 4. DO NOT CHANGE THE OUTLINE OF THE PAWL OR CAM NOTCH.

25 The Pawls can sometimes be made to jam when two Station Selector Cams are set to one station, especially if both Cams are not set exactly to the same frequency and an attempt is made to push one button, then the other button. The Motor will hum or the Clutch will slip until the button is released. What actually happens is this: When such a button is pushed that its Pawl, in falling directly into the Notch on the Station Selector Cam, binds against the high-side wall of the Notch, the Bakelite Cam assumes the position shown in figure 3. The Motor drives the Station Selector Cam tighter against the Pawl and prevents it from falling farther into the Notch. The jammed Pawl may be released by pushing another button and no damage is done. It is possible, with close adjustments of the Back Switch Contacts, to make the Pawls jam as indicated above even when they are set exactly to the same frequency. FOR THIS REASON THE SETTING OF TWO OR MORE BUTTONS TO ONE FREQUENCY ON DEMONSTRATOR SETS IS NOT RECOMMENDED AS GOOD PRACTICE

26 A similar condition may exist when the set is tuned to a station manually, and then the button set for that station is pushed.

STATION SELECTOR CAMS

27 The Cam Assembly is designed to operate through slightly less than 180°. The Cams though, can be rotated all the way around. Obviously then, it is possible to set a Cam so that its Notch will not pass under the Pawl. If a Cam were so set and the button pushed in, the Pointer would run to the end of the Dial and the Motor would continue to operate. This occurs because the Notch has not come around so the Pawl could fall in and cut the power off. TO CORRECT SUCH FAULT: Turn the power off. Pull out the Set-up Knob. Unlock the Cam Assembly by turning the Set-up Knob clockwise as far as it will go. A slight click should be heard as the mechanism is unlocked. Then push in the offending button. Rotate the Set-up Knob to run the Dial Pointer clear to the very end of the Dial in one direction then in the other. The Cam should now be in the proper position, ready to be set up to a station.

28 A similar condition is when a Cam is set to bring the Pointer to the very end of the Dial. The Pawl may lack just a very little bit of falling in far enough to cause the power to be cut off. Reset the Cam so the Pawl can fall in before the Cam Assembly Stop Pin (Figure 14) hits the stop.

KEYS

29 It is quite unlikely that the Keys will require any adjustment. Their failure to work properly will usually be due to improper adjustment or operation of some other part or parts of the mechanism.

CAM ASSEMBLY LOCK

30 Refer to figure 9. The left saw-tooth section of the Lock, the Spring Retaining Washer and the Latch Spring are keyed to the Cam Shaft. The right saw-tooth section of the Lock and Lock Gear (Figure 13) are free to turn on the Cam Shaft, subject to certain limits. These limits are complete engagement of the teeth on the two sections of the Lock in one direction, and a stop on the Lock Gear in the other direction. Rotating the right half of the Lock counter-clockwise (by turning the Set-up Knob clockwise) will cause the two saw-tooth sections to assume the meshed or unlocked position shown in figure 9A. It should relieve the pressure on the Station Selector Cams and Friction Washers enough so that they can be turned on the Cam Shaft quite freely. In this position the flat Latch Spring Arm should be hooked over the Stop on the Lock Gear (Figure 9A). The Cam Assembly may then be rotated within its working range, by the use of the Set-up Knob, without causing the mechanism to lock up.

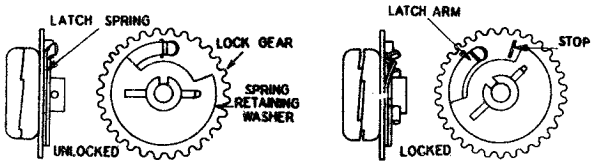

CAM ASSEMBLY LOCK

FIG. 9A **FIG. 9B**

31 The Cam Assembly will be locked up if the Set-up Knob is turned after the Cam Assembly Stop Pin (Figure 14) reaches the Back Stop on the Left End Bracket. This occurs because the Latch Arm slips over the Stop on the Lock Gear and permits expansion of the lock as shown in figure 9B. When fully unmeshed the lock has expanded about .030 of an inch. The stop on the Lock Gear would be against the stop portion of the Spring Retaining Washer, and only the tips of the teeth on the saw-tooth sections would be touching each other. The pressure exerted on the Station Selector Cams will depend upon the amount the saw-tooth sections are unmeshed. When unmeshed (locked up) as far as possible, with the Stop on the Lock Gear against the Stop on the Retaining Washer, if there is still insufficient pressure being exerted to keep the Station Selector Cams from slipping, proceed as follows: Unlock the Cam Assembly and slip a horseshoe shaped shim, about .01 on an inch thick, down between the left Station Selector Cam and the Bushing (Figure 14). Do not make this shim too thick or the mechanism will tend to lock up while attempting to set up stations.

32 Locking up of the mechanism during set-up may be due to a Station Selector Cam not turning freely enough because of dirt, grit, etc. between the Cams and the Friction Spacer Washers. This may also result from defective Latch parts or a quick sudden turn of the Set-up Knob. TO REMOVE THE LATCH SPRING OR THE LOCK GEAR, first remove the Clutch as outlined in section 23. Then remove the Reduction Gears. Unlock the Assembly and pull out the pin through the Cam Shaft, to the right of the Lock (Figure 14). The Retaining Washer, Latch Spring and Lock Gear may now be slid off the right end of the Cam Shaft.

BAR AND ARM ASSEMBLY

33 The lower end of the Arm should rest right on the "hump" of the Kickout as shown at D in figures 5, with the mechanism in the manual tuning position. If the adjustment is correct any movement of the Arm, either forward or backwards, should allow the Kickout Arm to rise. This setting can usually be secured by moving the Friction Wheel in or out on the Motor Shaft, thus sliding the Friction Roller Assembly (Figure 13) backward or forward on the Tuning Shaft. The amount of adjustment possible by this method is limited by the movement of the Friction Wheel possible without causing it to interfere with the

Star Wheel, or the Motor Pinion becoming disengaged from the First Reduction Gear. Further adjustment, if necessary, may be made by bending the Arm slightly, preferably at its upper end. THE ADJUSTMENT SHOULD NOT BE CARRIED OUT TO THE DETRIMENT OF THOSE ADJUSTMENTS REQUIRED FOR THE SIDE SWITCH AS INDICATED IN SECTIONS 16 AND 19.

KEY STOP BAR AND KICKOUT ARM

34 The Adjustable Tip on the Kickout Arm in engaging the Star Wheel (Figure 6) determines the position of the Key Stop Bar (Figures 1B and 13), which holds the buttons in. If the Tip on the Kickout is set too low, the Key Stop Bar swings up so far that the buttons are hard to release. If the Tip is set too high the buttons will not stay depressed, since the Key Stop Bar (Figure 1B) cannot come up far enough to catch and hold the keys in. Therefore, the Adjustable Tip on the Kickout Arm should be set as high as possible and still allow the buttons to stay in.

35 Failure of buttons to stay depressed may also be due to: the Kickout Spring (Figure 13) being bent down too far (it should clear the Kickout Arm by about 1/16 of an inch when the mechanism is in the automatic position); insufficient tension in the Return Spring on the Key Stop Bar; or the Key Stop Bar is sprung down in the middle. Also see section 37.

36 If a button will not release when another is pushed, the Key Stop Bar may be jammed or sprung, or held from normal movement by the Kickout Arm being caught on the Star Wheel; or a Pawl may be sticking in its Station Selector Cam.

STAR WHEEL

37 The Star Spring Collar (Figure 13) should be set so that the spring holds the Star Wheel in such position that the Pin is midway between the ends of the slot in the Star Wheel hub. At the same time the set screw in the Collar should be in the groove around the tuning shaft, to locate the tuning shaft in the End Bracket. Within the limits of movement allowed by the Slot and Pin, the Star Wheel should turn quite freely on the Tuning Shaft except as restrained by the Spring. Otherwise the Tip of the Kickout Arm may sometimes engage one of the points of the Star Wheel and hold the Key Stop Bar down, thus preventing the Key from catching and staying depressed. (Sections 34 to 36 and Figure 6.)

38 All edges and corners of the Star Wheel must be smooth and free from burrs. If not, the Tip of the Kickout Arm (Figure 13) may catch and prevent the buttons from staying in or being released.

MOTOR

39 The Motor is mounted on the Right End Bracket by two Mounting Screws (Figure 13) through oversize holes in the Bracket. The size of the holes permit adjusting the meshing of the Motor Pinion and the First Reduction Gear for minimum noise. Noisy operation may be caused by either too tight or too loose meshing of the Gears. Too tight meshing will also load up the drives because of binding. See section 49 for details on "Universal" type motor.

ANTI-BACKLASH GEARS

40 There are two types of Anti-backlash Gears used in the Mystic Mechanism. One type is made up of two spur gear sections and two small coil springs. Such gears are used in the gear reduction train driving the Cam Shaft (Figure 13), the Clutch (Figure 8) and the Pointer Drive Gear (Figure 15). The springs in these gears should be compressed by displacing the two gear sections one or two teeth with respect to each other. DISPLACEMENT OF THE GEAR SECTION FACING YOU SHOULD ALWAYS BE CLOCKWISE WITH RESPECT TO THE OTHER GEAR SECTION. Too little compression in the springs cause play and backlash. Too much compression causes binding, tending to load up the driver, and noisy operation. The First Reduction Gear (next to the motor pinion, Figure 13) uses light springs, part number 85815; the Second Reduction Gear (next to the Clutch, Figure 13) uses heavier springs, part number 112465; the Clutch and Pointer Drive Gear use still heavier springs, part number 89086. The correct displacement between sections of these gears, when equipped with the proper springs, should be not less than one nor more than two teeth.

41 The other type of gear is used to drive the Gang Condenser (Figure 10). The teeth of such gears are so shaped that, when the gears are kept tightly meshed together, backlash is prevented.

FLEXIBLE COUPLING

42 This device permits some misalignment of the Gang Condenser Shaft and the Extension Shaft (Figure 10), without causing binding in the bearings supporting the shafts. Inside of it is a coiled compression spring which keeps the Knurled Gears in mesh and prevents backlash. TO ADJUST THIS SPRING: Set the Coupling so the end of the Gang Condenser Shaft is flush with the inside edge of the back coupling collar. Tighten the set screw in the back coupling collar. Put the Knurled Gears in mesh, then compress the spring in the Coupling slightly and tighten the set screw in the front collar of the coupling. There now should be just enough thrust by the compressed coil spring to keep the Knurled Gears in mesh and free from backlash. If not, loosen the front set screw in the coupling, compress the spring a little more and retighten the set screw.

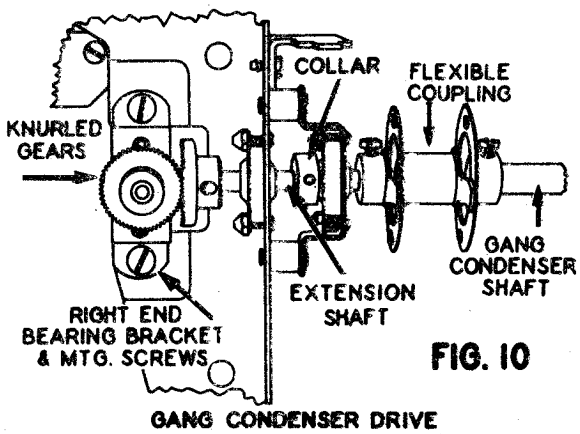

FIG. 10

43 A few of the early chassis used a single section coupling. Later sets use a double section coupling, part number 112450, as shown in figure 10. This latter type is more flexible than the former and consequently, causes less binding when the Extension and Gang Condenser shafts are badly out of line. Only the later type is carried in stock. Therefore, if it is necessary to replace the older type, it will also be necessary to use Spring, part number 112490, and Extension Shaft, part number 112488, with the new coupling. Or in place of the new shaft, the old shaft may be used by cutting off 1/16 of an inch and chamfering the end like the piece which was cut off. The new shaft should be 2 3/16 inches long.

SETTING UP

44 THE FOLLOWING POINTS MUST BE OBSERVED DURING THE SETTING UP AND USE OF THE AUTOMATIC MECHANISM IF BEST RESULTS ARE TO BE OBTAINED.

ON MODELS 1865 AND 1866 THE TONE CONTROL BROADENS THE TUNING WHEN IN THE TREBLE POSITION, MAXIMUM CLOCKWISE, THEREFORE THIS POSITION POSITIVELY MUST NOT BE USED DURING SET-UP.

a. Use a GOOD antenna.

b. Allow the set to warm up for twenty minutes before setting it up.

c. Set up the buttons from left to right, that is, the right hand buttons should be the last to be set up.

d. Avoid setting buttons on weak or fading signals.

e. Tune carefully when setting up.

f. After a button is set up, do not push that button again until the mechanism is locked. To do so will spoil the setting of that button.

g. Lock up tight. Continue to force the Set-up Knob in a counter-clockwise direction even after it seems to reach a definite stop. If you do not use force, the settings of the buttons may change.

45 Detailed, illustrated instructions for setting up the Mystic Mechanism are included with each receiver. In brief, the setting up procedure is as follows:

a. Pull off the Tuning Knob. This reveals the Set-up Knob (Figure 13). Pull the Set-up Knob out. Unlock the mechanism by turning the Set-up Knob clockwise until a slight click is heard.

b. Push in a button. After the Pointer has stopped moving, grasp the Set-up Knob and tune in the station to which the button is to be set.

©John F. Rider, Publisher

NER CORP.

MAGIC KEYBOARD
Key Stop Bar, Kickout Arm
Star Wheel, Motor, Gears
Coupling, Motor Connections
Dial Mechanism

c. Push in another button. After the pointer has stopped moving, again grasp the Set-up Knob and tune in the Station to which this button is to be set.

d. Continue to push in buttons and tune in the stations until as many are set up as desired. Then release the last button set up, by pushing the Set-up Knob part way in.

e. Pull the Set-up Knob back out. Lock up the Cam Assembly by turning the Set-up Knob counter-clockwise as far as it will go. Continue to force the Set-up Knob in a counter-clockwise direction even after it seems to reach a definite stop. If you do not use force, the settings of the buttons may change.

f. Push in the Set-up Knob and replace the Tuning Knob.

46 Occasionally a unit may be encountered in which it is difficult to set up accurately, the extreme right hand buttons. In such case, they should be set to stations at the low frequency end of the dial, or used to locate short wave bands.

47 In case of complaint that a button set for some frequency, does not tune to that point within 10 K.C., or more, after locking up, it usually develops that the Station Selector Cam has inadvertently been moved before it was locked. This may come about by turning the Set-up Knob slightly when releasing the button, preparatory to locking the mechanism. Another possibility, if the Back Switch is not adjusted properly, is that by pushing a second button the motor will start before the pawl falls clear of the first cam, thus causing this cam to be shifted slightly before it is locked in place.

48 A short may occur in the unit due to the Tuning Shaft Bearing Stop (Figure 13) getting out of place. It then catches on the Set-up Gear. When the gear is turned counter-clockwise it forces the Bearing Stop against the hot blade of the Side Switch. Solder the Bearing Stop in place.

UNIVERSAL MODELS CONNECTIONS

49 The tuner motor may not operate if the line voltage drops very much below 105 volts. The motor used in the 60 cycle models will only operate properly on 50 to 60 cycles. Special motors, used in the B and W models, can be connected for operation on other frequencies as shown below.

MOTOR CONNECTIONS FOR TUNER MOTOR USED ON 25-80 CYCLES UNIVERSAL MODELS.

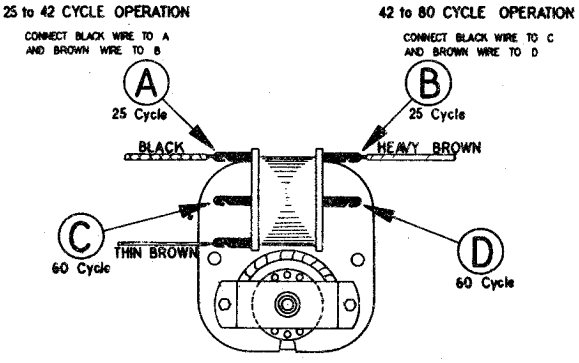

50 The connections for the Reactance Dimmer, both standard 60 cycles, and universal 25 to 80 cycle types are shown on the various chassis service manuals.

DIAL MECHANISM AND CALIBRATION

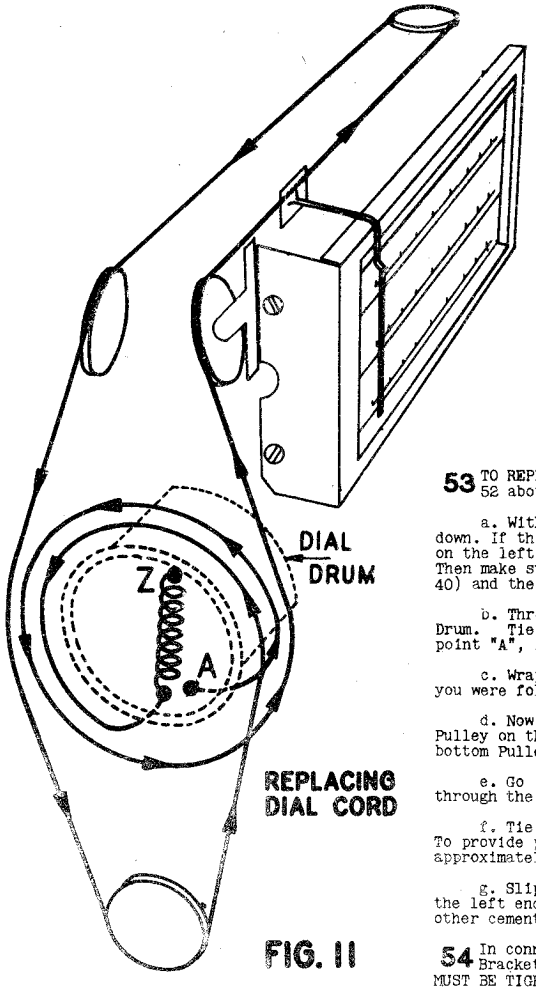

FIG. 11

51 The Cam Assembly Stop Pin, located on the left end of the Cam Assembly (Figure 14), allows approximately 180° of rotation of the Assembly and provides a strong, positive stop for the mechanism during locking and unlocking. It also protects the less rugged stops on the Gang Condenser. This Pin should strike the Stop just before the Gang Condenser is in full mesh or fully open. If it does not, to establish the correct relation between these two sets of stops: Loosen the set screw in the Knurled Condenser Drive Gear (Figures 10 and 15) on the Cam Shaft. Turn the Cam Assembly until the Stop Pin on it points to the back and is resting against the Stop on the Left End Bracket (Figure 14). Close the Gang Condenser to full mesh, then open it up just the least bit to relieve the Condenser Stop and tighten the set screw in the Knurled Gear. This allows the heavy Cam Assembly Stop Pin to reach its Stop first in each direction, since its working arc is slightly less than that of the Gang Condenser. See chassis service manual for complete calibration instructions.

52 The Knurled Gear (Figure 10) driving the Gang Condenser should be set on the Cam Shaft so that the center of its face engages the Crown Gear on the Extension Shaft. The dial Drive Gear, located on the left end of the Cam Shaft, (Figure 15) should engage the center of the face of the gear on the Dial Cord Drum. Check the end play in the Cam Shaft to see that these two sets of gears will not become unmeshed. If there is excessive end play in the Cam Shaft, move the collar (Figure 14) in closer to the Left End Bracket. There should be approximately .010 of an inch play between the Collar and Bracket.

53 TO REPLACE THE DIAL CORD: First check the points outlined in sections 51 and 52 above, then refer to figure 11 and proceed as follows:

a. With the Gang Condenser closed, the holes in the Dial Cord Drum should be down. If they are not, loosen the set screw in the Pointer Drive Gear (Figure 15) on the left end of the Cam Shaft, and rotate the Dial Cord Drum so that they are. Then make sure that the anti-backlash springs are compressed one tooth (section 40) and the gears are meshing properly before tightening the set screw.

b. Thread one end of the Dial Cord through the front hole of the two on the Drum. Tie a knot near the end of the inside of the Drum. This is the starting point "A", figure 11.

c. Wrap one and one quarter turns around the Drum counter-clockwise as though you were following the threads of a left hand screw.

d. Now go up over the front Pulley on the left end of the Dial; around the Pulley on the right end; over the back Pulley on the left end; down around the bottom Pulley and up to the front of the Drum.

e. Go around the Drum three quarters of a turn counter-clockwise and up through the back hole.

f. Tie the Tension Spring on and hook it over the hook on the Drum at "Z". To provide proper tension in the Dial Cord the extended spring should measure approximately 1 1/4 inch in length over all, when the Cord system is equalized.

g. Slip the Pointer clip under the Cord, set the Pointer at the last mark on the left end of the Dial Scale, close the clip and put on a drop of household or other cement on the Cord and clip junction.

54 In connection with Calibration, notice that movement of the Left End Bearing Bracket (Figure 15) changes the Pointer setting. BOTH SCREWS IN THIS BRACKET MUST BE TIGHT.

MAGIC KEYBOARD
A.F.C.and Mechanism Notes
Manual Tuning,Parts

STEWART-

CHECKING A.F.C.

55 In order to determine if the Automatic Frequency Control System is working, either of the following methods may be employed without removing the chassis from the cabinet.

a. Select a local station whose signal is fairly strong and which operates on a frequency below 1000 KC. Tune manually to a frequency slightly above that of the selected station, but close enough to the signal that it can be heard somewhat distorted.

b. Open the A.F.C. (two upper) contacts on the Side Switch, by reaching into the back of the set with a pointed stick and forcing the contacts apart.

c. A.F.C. should then pull the signal in clearly and hold it, while the contacts remain open.

d. Now tune below the station frequency a few KC. and open the A.F.C. contacts again. Again A.F.C. should pull the signal in clearly.

56 The same check on Automatic Frequency Control action can be made from the front of the set by proceeding as follows:

a. Pull off the Tuning Knob. Pull out the Set-up Knob. Unlock the mechanism by turning the Set-up Knob clockwise until a slight click is heard.

b. Push a button in. After the pointer stops, tune in a fairly strong station below 1000 KC. Then detune until the signal is somewhat distorted.

c. Now, push the Set-up Knob in and leave it in. This also releases the depressed button. Push the same button in again. This should open the A.F.C. contacts on the Side Switch, and allow A.F.C. to bring the signal in clearly.

d. Pull the Set-up Knob out. Push the same button in again. Detune the other side of the station and repeat paragraph c.

57 If Automatic Frequency Control does not appear to be working: First make sure that the A.F.C. contacts on the Back and Side Switches (Figure 1 to 7) are open when a station is tuned in automatically and that the A.F.C. contacts on the Side Switch are closed when tuning manually or setting up the mechanism. Then check the Discriminator, Control,R.F., Mixer, and I.F. tubes. Re-align the I.F., Broadcast and discriminator trimmers as explained in the chassis service manuals before attempting to locate a fault in the chassis.

MANUAL TUNING

58 There should be sufficient traction between the Friction Roller and the Friction Wheel (Figure 13) to provide positive movement of the mechanism when the Tuning Knob is turned, providing there is no mechanical overload in the system. If the Dial Pointer fails to move when tuning manually, first, try washing the Rubber Ring on the Friction Wheel with carbon tetrachloride to remove any oil or grease. The traction between the Friction Roller and Friction Wheel may be increased slightly by sliding the Friction Wheel out farther on the Motor Shaft. The contact pressure between the Friction Wheel and Roller can be increased by shortening the Return Spring on the Bar and Arm Assembly (Figure 13). However, shortening this spring makes the buttons harder to push in.

59 Because of the exceptionally high tuning ratio used in this unit, the compounding effect on any slight lost motion is such that every precaution must be taken to keep backlash within satisfactory limits. Backlash will be at a minimum with proper adjustment of the various gears, as outlined in sections 40 and 41. Considerable lost motion will result if the Gang Condenser sways because of too loose mounting or because it turns too stiffly. Assuming the Clutch is in good working condition, it will only slip if mechanically overloaded.

60 In case of excessive Pointer backlash, check the following points; BOTH screws in the Left End Bearing Bracket must be tight. See that the Pointer Drive Gear(Figure 15) is not slipping on the Cam Shaft, that the anti-backlash springs in the gear are compressed at least one tooth, and that it does not slip out of mesh with the gear on the drum. The Dial Cord should be tight enough to extend the Tension Spring in the Drum so it measures about 1 1/4 inches long. See that the Pointer does not slip on the Cord and slides freely on the Guide Rail.

61 If the Tuning Shaft turns only a part of a revolution then catches, with a button depressed, it is probably due to burrs or rough edges on the Star Wheel or Adjustable Tip of the Kickout Arm (Figure 13). Or it may be that the buttons are too hard to release, because of improper adjustment of the Kickout Arm tip. See sections 35 and 37.

CHANGING MECHANISM

62 The early production sets have the Mystic Mechanism wi directly to the chassis. Later sets are equipped wit socket and plug to facilitate removal of the mechanism. socket on the later mechanism is mounted about four inches f the right end, and facing the rear, on the horizontal reinfo ing member on the back of the Dial Assembly. It is connec in as shown in figures 1A or 1B, depending upon the type of S Switch (See Section 14.)

63 To change the Mystic Mechanism and Dial Assembly, p number 112727, it is only necessary to unsolder the gr and the green-black wires to the volume control, take the v ume control off the bracket, slip the Visual Tuning Indica Light socket off, pull the above mentioned plug, loosen the screw in the Flexible Coupling (Figure 10) and take out the f screws holding the assembly to the chassis. If the assem has no plug on it see section 65.

When installing the new Mystic Mechanism and Dial Assem see section 51 for dial calibration instructions, and sect 42 for information on adjusting the tension in the spring in flexible coupling.

64 To change the Mystic Mechanism, part number 111350, on it is necessary to remove the Dial Cord from the Drum (F ure 11), take out the four screws holding the two End Bear Brackets to the frame, pull out the plug and take out the f screws holding the unit to the frame. The two front scr holding the unit to the frame can be reached by removing second or third and the sixth or seventh button shells in bottom row. If the unit has no plug on it see section 65.

When installing the new Mystic Mechanism, see section for alignment of the End Bearings, sections 51 to 53 for stringing the dial cord and dial calibration, and section 42 information on adjusting the tension in the spring in the fl ible coupling.

65 If it is necessary to put one of the later mechanism, h ing the socket, on an early chassis, the Plug (Figure 1 part number 112736, must be wired to the chassis. The plug provided with seven color coded wires of sufficient length connect to the proper points on the under side of the chass Disconnect an old wire and connect the corresponding new wi following the colors for identification, before disconnect the next old wire. However, some of the cable wires may hav different color than the original chassis wires. Briefly cable wires are:

Black (Heavy)	To grounded side of 6 volt winding of power transformer.
Blue (Heavy)	To other terminal of 6 volt winding of power transformer.
Light Blue	To one leg of the Reactance Dimmer Coil (The Visual Tuning Indicator Light is connected to the other leg.)
White - Red	On models R-184 and R-185 to A.V.C. cathode (the one with the white-green wire attached to it) of the 6H6 tube. On model R-186 to the ungrounded cathode of the discriminator (6H6) tube.
Small Black or White	On models R-184 and R-185 to other cathode of the 6H6 tube - the one with the brown wire attached to it. On model R-186 to ground.
Green - Black	On model R-184 to ground. On models R-185 and R-186 to one end of the audio input choke - the end connected to the control grid of one of the 6V6 output tubes with a green-black wire.
Green or Red	On model R-184 to the control grid of the 6L6 output tube. On models R-185 and R-186 to the other end of the audio input choke - the end connected to the control grid of the other 6V6 output tube with a green wire.

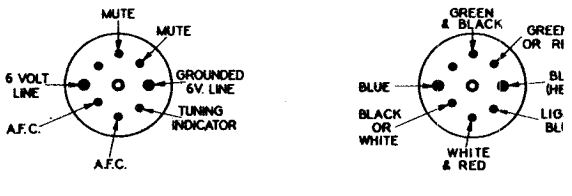

TOP VIEW OF PLUG

FIG. 12

©John F. Rider, Publisher

SPECIAL TOOLS

66 A special spring adjuster tool, part number T117468, list price $0.75 may be obtained from the factory for adjusting the Back and Side switch blades, although a pair of duck-bill pliers or a screw driver can be used.

67 Wrenches can also be supplied by the factory for the fluted (Bristol) set screws used in various parts of the Mystic Mechanism. For the #6 (small) set screws, the wrench is part number 112483, and for the #8 (large) set screws, the wrench is part number 112484. These wrenches have a list price of 7 cents each.

PARTS LIST FOR MYSTIC MECHANISM

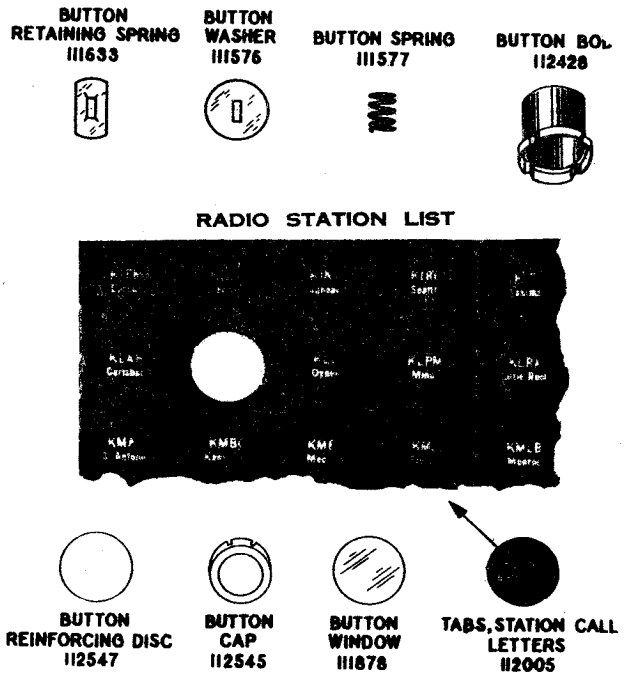

Wherever the word "right" or "left" appears in the following list, it is understood that you are standing in front of the mechanism.

The Identification Numbers are to assist you in identifying parts shown on figures 13, 14 and 15 or to indicate in which figure the part can be seen. The identification is NOT TO BE USED in place of the part number, when ordering parts.

PART NUMBER	IDENTIFICATION NO.	DESCRIPTION	LIST PRICE
111591	1	Arm (long) - side switch operating	.05
111627	2	Bar & Arm Assembly	.60
111526	3	Bearing - on tuning shaft	.50
111176	4	Bracket - left end of mechanism	.20
111547	5	Bracket - with studs (right end of mechanism)	.90
111569	6	Bracket - push button escutcheon support	.08

PRICES SUBJECT TO CHANGE WITHOUT NOTICE.

PART NUMBER	IDENTIFICATION NO.	DESCRIPTION	LIST PRICE
111162	7	Bushing - left end of cam shaft	.18
112428		Button Body - for tuner	.10
112545		Button Cap - for push button	.06
111878		Button Window - celluloid for push button	.01
112547		Button Reinforcing Disc - for push button	.01
111633		Button retaining spring - inside push button	.02
111577		Button Spring - in push button	.005
111576		Button Washer - in push button	.005
111617	8	Cam - bakelite for back switch operation (with arm)	.62
112563	8	Cam - bakelite - less operating arm	.10
111625	9	Cam Shaft - with cams & right end brkt.	11.50
111168	10	Cams - Station selector	.50
111146	11	Clutch - collar, spring and gear	.55
111160	12	Collar - retaining (less set screw) left end of cam shaft	.15
111161		Collar - retainer for pawls	.10
111616	13	Collar & Spring - for star wheel	.36
111882		Collar - inside of locking cam	.08
111137		Drive Ring - rubber (on friction wheel)	.05
111693	14	Escutcheon - metal, for push button	1.15
111310	15	Flywheel - with set screws	1.25
111549	16	Friction Roller - on rear end of tuning shaft	.30
111169	17	Friction Spacer - between cams	.11
111402	18	Friction Wheel - (on motor shaft) with rubber ring	.66
111137	18	Drive Ring rubber (on friction wheel)	.05
111145	19	Gear - and pinion (reduction)	.45
111157	20	Gear - crown and pinion, for "Setting-up"	.75
111523	21	Gear - set up (on tuning shaft)	.50
112726		Housing - with keys	3.25
112522	22	Key stop bar - kickout assembly	.50
111632	23	Knob - for setting up	.31
111408		Lock - saw tooth adjacent to cam (left half) - Fig. 14	.40
111548	24	Lock - saw tooth with gear (right half)	.70
112727	25	Mystic Mechanism - complete with all dials - ready to mount on chassis	60.00
111350	26	Mystic Mechanism only, less dial frame assembly	35.00
111380	27	Motor - 6 volt 60 cycles	4.40
112354		Motor - 6 volt 25 to 80 cycles	5.50
111491	28	Pawl & Bushing - single unit	.20
111634	28	Pawls & Shaft - (assembly)	4.00
111148	29	Pin - cam shaft, left end	.05
111409		Pin - for friction roller - Fig. 13	.04
111410		Pin - in star wheel - Fig. 13	.04
111411	30	Pin - cam shaft - right end	.04
111883		Pin - inside of lock	.03
111557		Retainer - over left end of pawl shaft (brass)	.03
111152		Retaining Ring - for reduction gears	.02
111153		Retaining Ring - for crown gear	.02
75032		Screw - #4 for kickout tip - Per C	.50
85040		Screw - #6 Hex. Hd. for mtg. frame Per C	.35
88707		Screw - Binder Hd. for mtg. push button escutcheon - Per dz.	.06
111673		Screws - (through back switch)	.01
111968		Screw - side switch mounting - Fig. 6	.01
85827		Set Screw - on clutch collar - Fig. 8	.02
111554		Set Screw - #4 headless (for pawl collar)	.01
111403		Set Screw - #8 for set up knob - Fig. 13	.12
111588		Set Screw - for collar and star spring mtg. (6/32)	.11
112138		Set Screw - 8/32 round head	.03
111166		Shaft - for pawls	.20
111405		Shaft - for key stop bar	.18
111406		Shaft - for bar and arm assembly	.18
111590	31	Shaft - tuning	.30
85815		Spring - between reduction gear sections (next to motor)	.01
89086		Spring - coil between sections of clutch gear - Fig. 8	.01
112465		Spring - between reduction gear sections (next to clutch)	.01
111138		Spring - horseshoe shaped on clutch	.02
111151		Spring - key stop bar shaft retainer	.01
111528		Spring - coil (inside of lock)	.01
111552		Spring - flat, with tongue, on lock (latch spring) - Fig. 9	.04
111555		Spring - for key and pawls	.06
111609	32	Spring - kickout	.05
111933	33	Spring - coil, key stop bar return	.03
112568	34	Spring - bakelite cam return	.05
111440	35	Star Wheel - on tuning shaft	.25
111674	36	Switch - side (above tuning shaft)	.95
112564	37	Switch - back, later type	1.25
112521	38	Tip - adjustable on kickout arm	.06
76999		Washer - lock, for kickout tip - Per C	.50
77113		Washer - flat for kickout tip - Per C	.50
111169	17	Washer - friction spacer (between cams)	.11
111553		Washer - spring retainer on lock mech. - Figure 9	.02
112483		Wrench - for #6 fluted set screw	.07
112484		Wrench - for #8 fluted set screw	.07

PARTS LIST CONTINUED ON PAGE 37

STEWART-WARNER CORP.

MAGIC KEYBOARD
Dial Mechanism and
Miscellaneous Parts

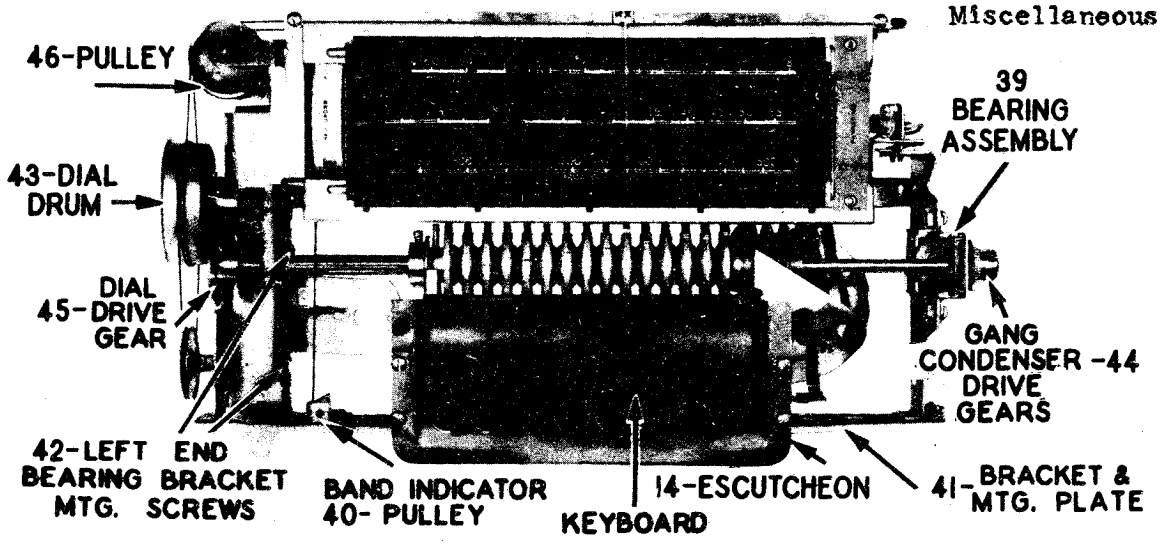

FIG. 15

25 FRONT VIEW OF MYSTIC MECHANISM AND DIAL ASSEMBLY

PART NUMBER	IDENTIFICATION NO.	DESCRIPTION	LIST PRICE
111930		Band Indicator - and frame assembly--	.40
111894	39	Bearing Assembly - self aligning, on right end of cam shaft and supports gang extension shaft	.40
111601		Bearing - self aligning	.12
111692		Bearing Retainer - plate, copper	.06
112658		Belt - for range switch drive	.06
111261		Bolt - chassis mtg. (#14 X 1-1/4)	.03
88831		Bracket - for range switch support (under chassis)	.02
111630	40	Bracket & Pulley - for band indicator cord	.10
111893	41	Bracket & Mounting Plate - for mystic mechanism	3.10
111894	39	Bracket & Bearing - right side of shaft	.40
111899	42	Bracket & Bearing - left side of shaft	.70
111260		Bushing - rubber (for chassis mtg.)--	.06
111892		Bushing - rubber, mystic mechanism mtg. to chassis	.02
111658		Clip - for pulley retaining	.01
110782		Cord - for band indicator (2 ft. required) Per ft.	.04
111302		Cord - dial drive (6 ft. lengths)	.30
111864	43	Dial Drum - with gear	.50
111226		Escutcheon - for dial (with glass)---	3.00
111227		Escutcheon - around push button opening	1.20
111690		Felt - oil wick for bearing	.05
112450		Flexible Coupling - with set screws--	.80
111865		Frame - dial, with scale	2.50
111608	44	Gear - right end of cam shaft drives gang condenser	.20
111629	45	Gear - dial drive (left end of cam shaft)	.52
111631	44	Gear - crown, on extension gang shaft	.36
111496		Knob - tuning or volume	.20
111497		Knob - range or tone	.20
111197		Lever - for band indicator(on shaft)-	.12
111370		Link & Lever - for range switch drive (used in early production)	.20
112633		Plug - for mechanism connecting (8 prong)	.20
112736		Plug and cable - for mechanism connecting	.75
111659		Pointer - for dial, with slider	.18
111622	46	Pulley - dial cord drive	.35
111630		Pulley & Bracket - for band indicator	.10
112628		Pulley - on range switch shaft under chassis	.20
84214		Retaining Ring - for dial drum	.02
89837		Retaining Spring - for holding escutcheon to cabinet	.01
111222		Scale - dial	1.20
110716		Screw - band indicator pivot (shaft)-	.03
111116		Screw - #5 X 5/8, mystic mechanism mtg.	.02
85827		Set Screw - 8/32 square head	.02
111403		Set Screw - 8/32 fluted head	.12
112138		Set Screw - 8/32 slotted head	.03
110716		Shaft, band indicator	.03
112488		Shaft - extension (between gang condenser & unit)- Figure 10	.20
111373		Shaft - for range switch	.98
85427		Socket - octal base	.15
110501		Socket - 4 prong (for speaker)	.16
110627		Socket - dial lamp & automatic lamp--	.12
111008		Socket - reactance dimmer lamp	.12
112630		Socket & Bracket - for electrical connections to mech.	.75
111090		Spacer - steel. mystic mechanism mtg. to chassis	.02
111570		Spacer - rubber, for mystic mechanism mtg. to chassis	.02
T117468		Spring Bender - (switch adjusting tool)	.75
89086		Spring - between sections of dial drive gear left side of mechanism	.01
111232		Spring - torsion for band indicator--	.05
111862		Spring - drive cord tension- Fig. 11r	.03
112490		Spring - in flexible coupling	.02
111676		Stud - lower left idler pulley	.10
112667		Stud - for pulley mtg.(for top pulleys)	.10
112005		Tabs - station call letters(6 sheets)	.60
84412		Terminal Strip - phono (model 186-P only)	.03
85066		Terminal Strip - G.D.A.	.20
89709		Terminal Strip - phono (for model 186-W only)	.15
112483		Wrench - for #6 fluted set screw	.07
112484		Wrench - for #8 fluted set screw	.07

PRICES SUBJECT TO CHANGE WITHOUT NOTICE.

Form 8529 PRINTED IN THE UNITED STATES OF AMERICA

DIAL MECHANISM AND MISCELLANEOUS PARTS LIST

Wherever the word "right" or "left" appears in the following list, it is understood that you are standing in front of the mechanism. The Identification Numbers are to assist you in identifying parts shown in figures 13, 14 and 15 or to indicate in which figure the part can be seen. The identification is NOT TO BE USED in place of the part number, when ordering parts.

©John F. Rider, Publisher

MAGIC KEYBOARD
Mechanism Drawings

STEWART-WARNER CORP.

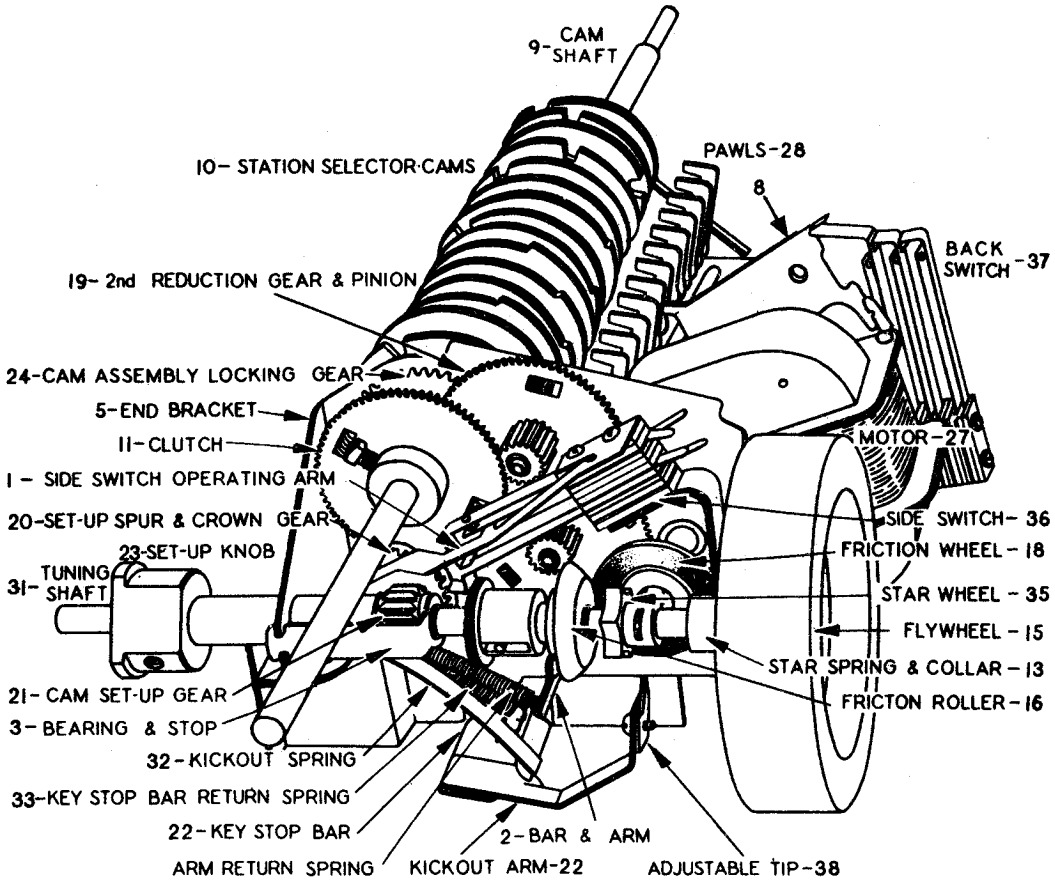

FIG. 13 LEFT END VIEW OF MECHANISM

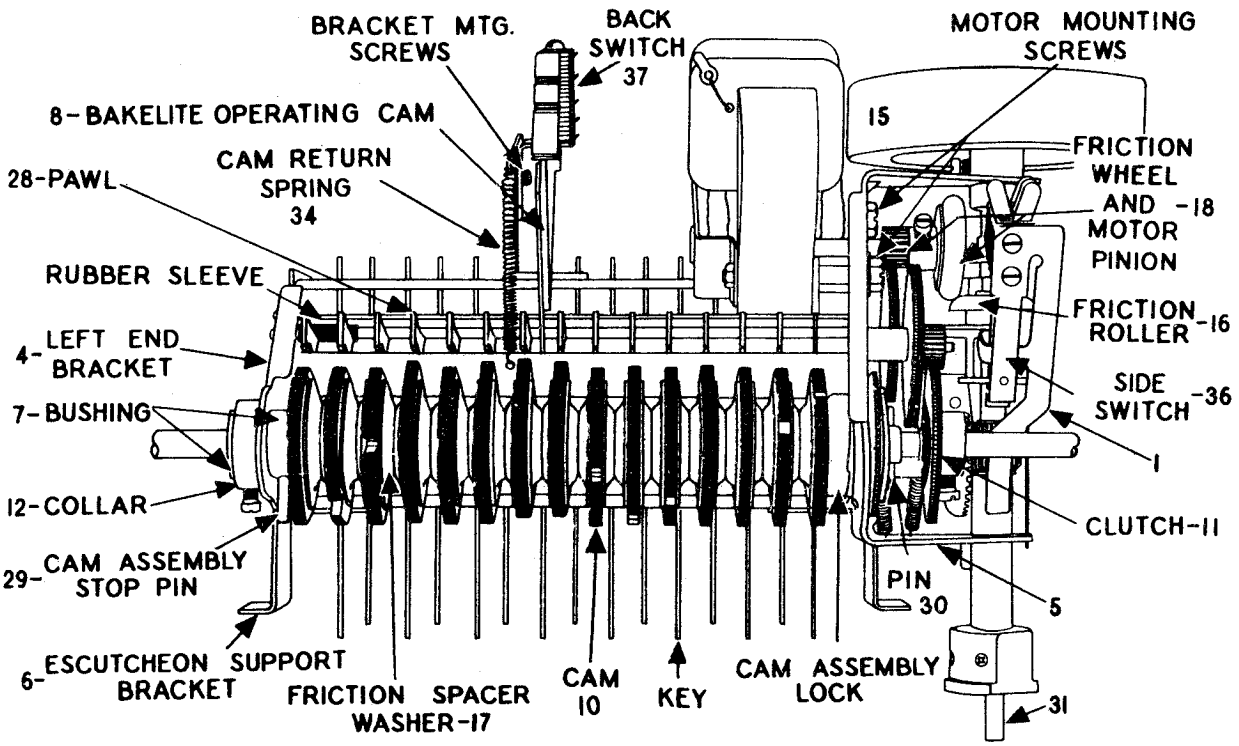

FIG. 14 26 TOP VIEW OF MECHANISM

©John F. Rider Publisher

STROMBERG-CARLSON TEL. MFG. CO.

MODEL 140 Series
Chassis Wiring

Tuning Ranges	A—540 to 1500 Kc.; B—1450 to 3500 Kc.; C—5600 to 18,000 Kc
Number and Types of Tubes	3 No. 6K7, 1 No. 6A8, 1 No. 6Q7, 2 No. 6F6, 1 No. 6E5, 1 No. 5Z3
Power Supply Voltage	105 to 125 Volts
Power Supply Frequency	25 to 60 Cycles and 50 to 60 Cycles
Input Power Rating:	
(Nos. 140-H, 140-K, 140-L)	115 Watts
(No. 140-P)	155 Watts
Frequency of Intermediate Amplifier	465 Kilocycles

APPARATUS SPECIFICATIONS

No. 140-H	50 to 60 Cycles; P-26190 Chassis; P-26171 Loud Speaker
No. 140-HB	25 to 60 Cycles; P-26191 Chassis; P-26171 Loud Speaker
Nos. 140-K, 140-L	50 to 60 Cycles; P-26190 Chassis; P-26170 Loud Speaker
Nos. 140-KB, 140-LB	25 to 60 Cycles; P-26191 Chassis; P-26170 Loud Speaker
No. 140-P	60 Cycles Only; P-26664 Chassis; P-26170 Loud Speaker; P-26632 Phonograph Unit
No. 140-PB	25 Cycles Only; P-26665 Chassis; P-26170 Loud Speaker; P-26633 Phonograph Unit

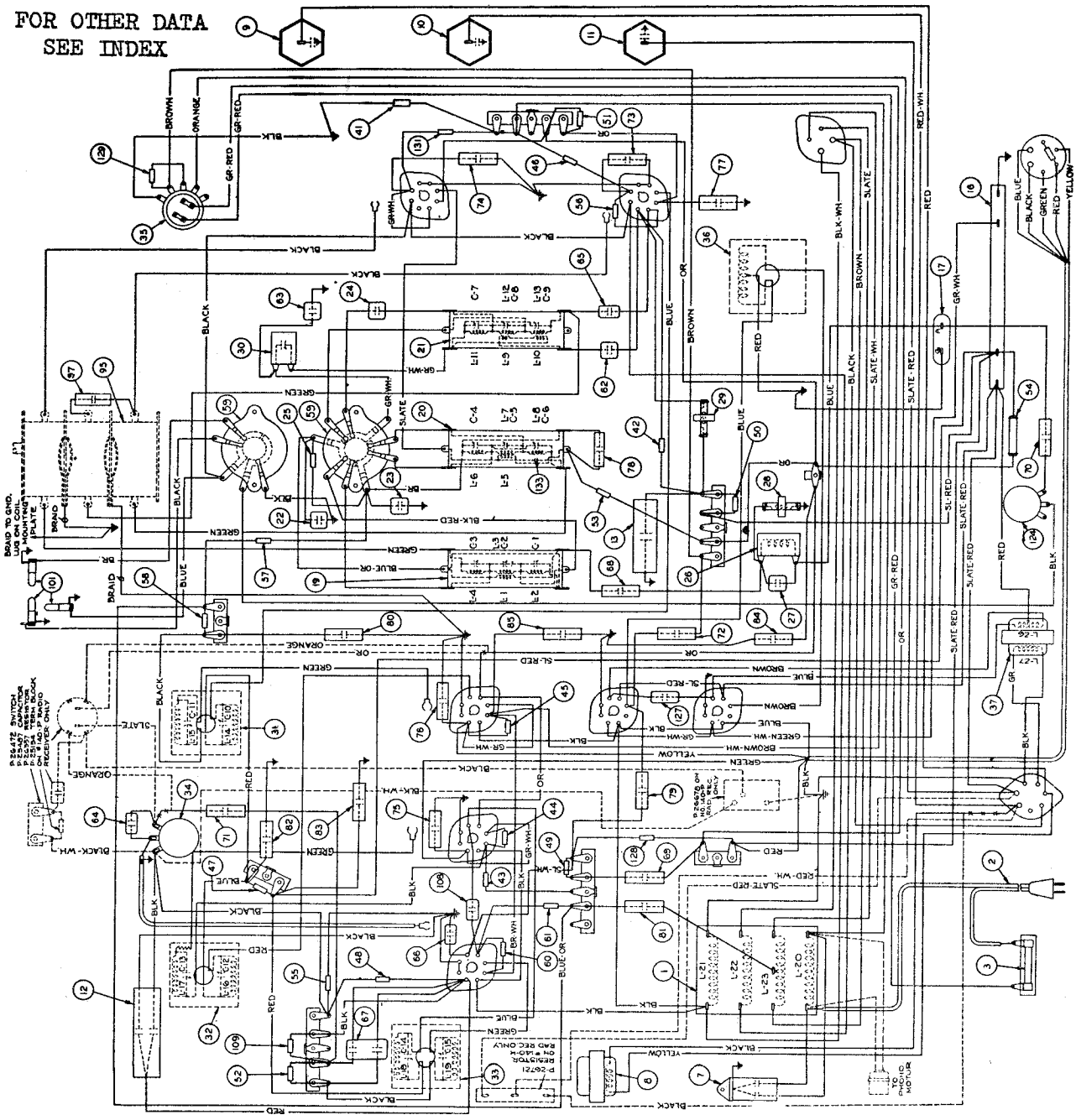

©John F. Rider, Publisher

MODEL 150 Series
Chassis Views

STROMBERG-CARLSON TEL. MFG. CO.

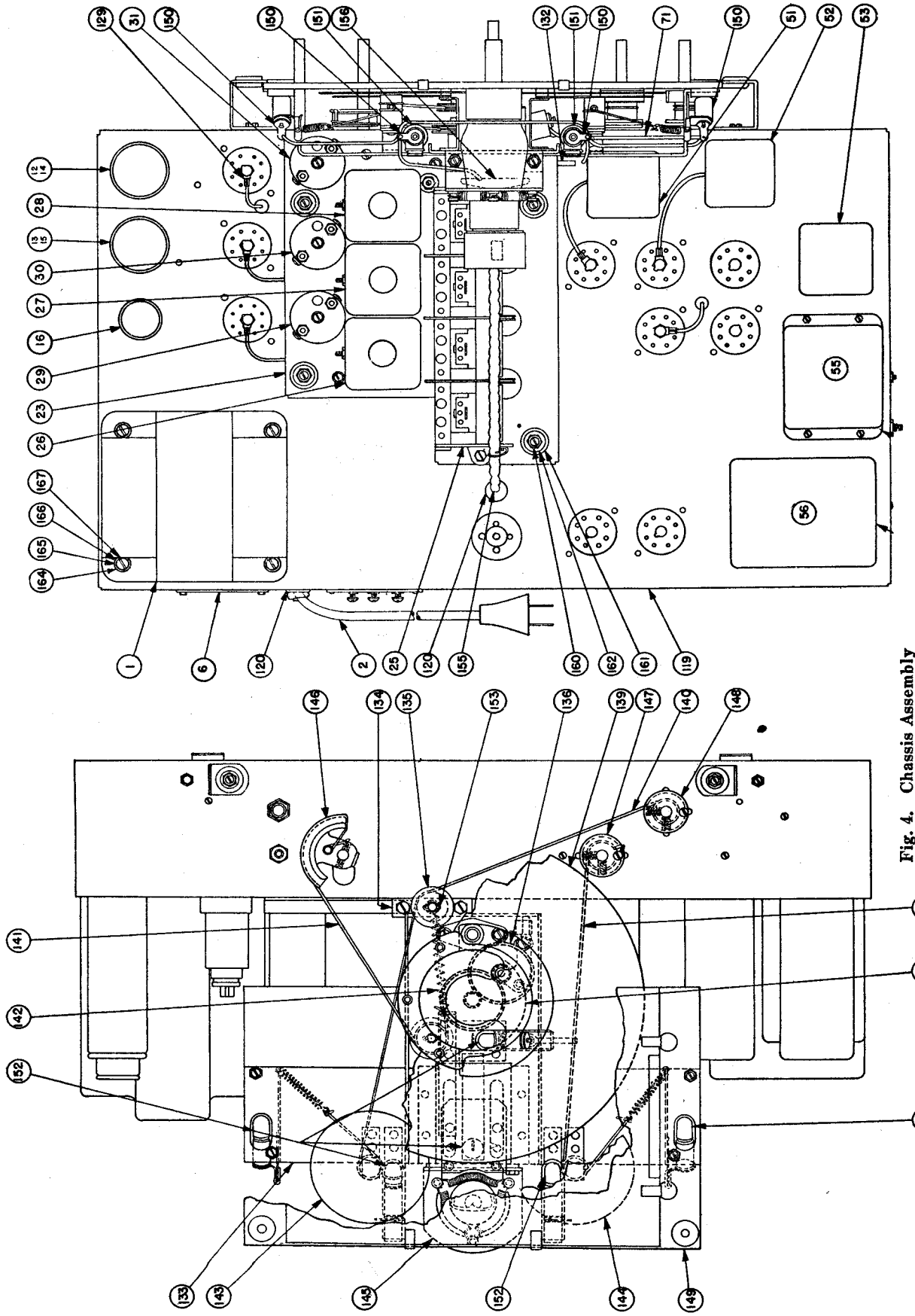

Fig. 4. Chassis Assembly

©John F. Rider, Publisher

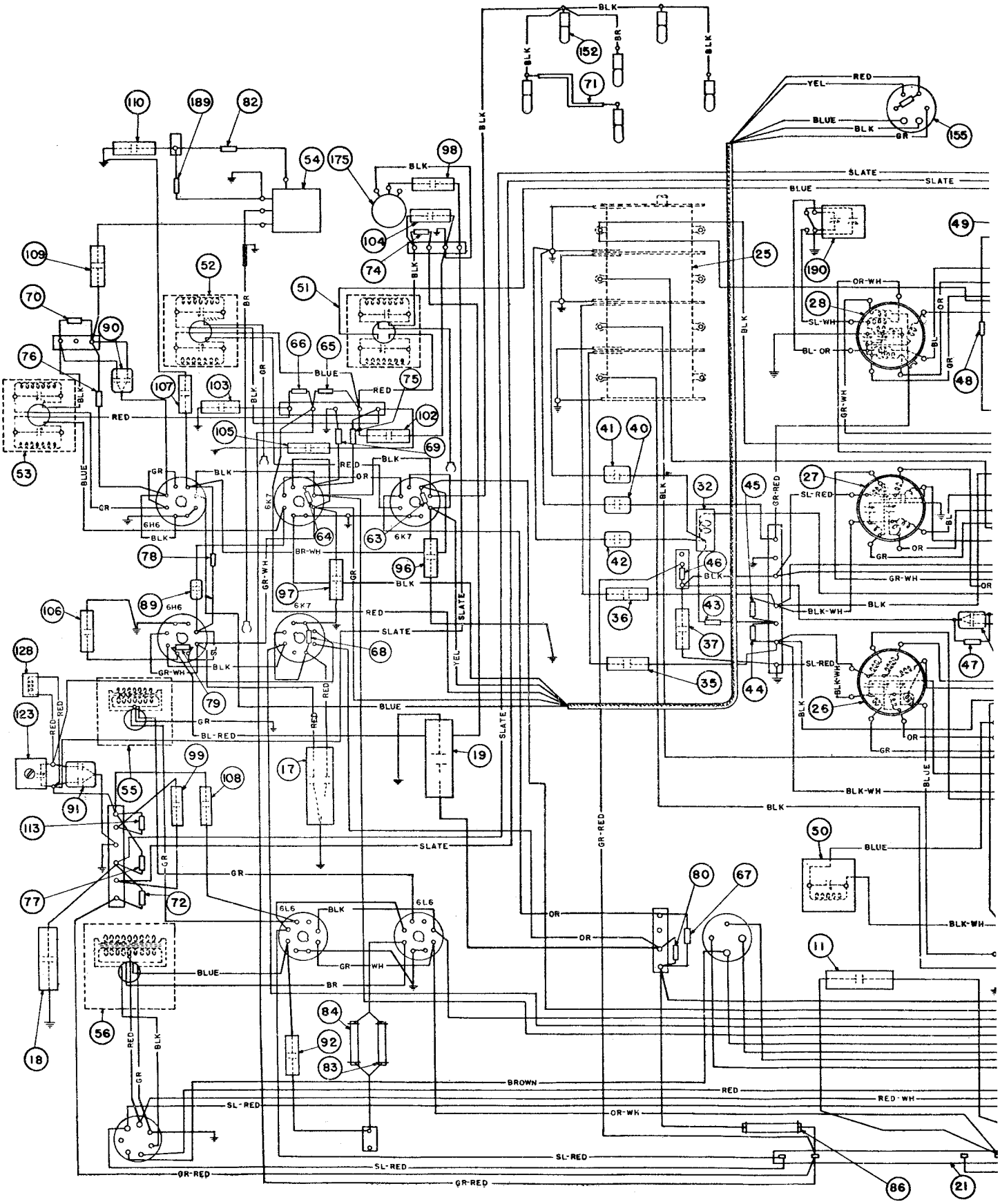

Fig. 3. Wiring Diagram of Chassis.

©John F. Rider, Publisher

SON TEL. MFG. CO.

MODEL 150 Series
Circuit Data
Chassis Wiring

Tuning Ranges—
X—145 to 370 Kc.; A—530 to 1700 Kc.; B—1700 to 5600 Kc.; C—5600 to 18,000 Kc.; D—18,000 to 60,000 Kc.
Number and Types of Tubes—4 No. 6K7, 1 No. 6A8, 1 No. 6J7, 2 No. 6H6, 2 No. 6L6, 1 No. 6E5, 1 No. 5Z3
Power Supply Voltage—105 to 125 Volts
Power Supply Frequency—25 to 60 Cycles and 50 to 60 Cycles
Input Power Rating—167 Watts
Frequency of Intermediate Amplifier—465 Kilocycles

APPARATUS SPECIFICATIONS

No. 150-L—50 to 60 Cycles; P-26454 Chassis Assembly; P-26170 Loud Speaker
No. 150-LB—25 to 60 Cycles; P-26455 Chassis Assembly; P-26170 Loud Speaker

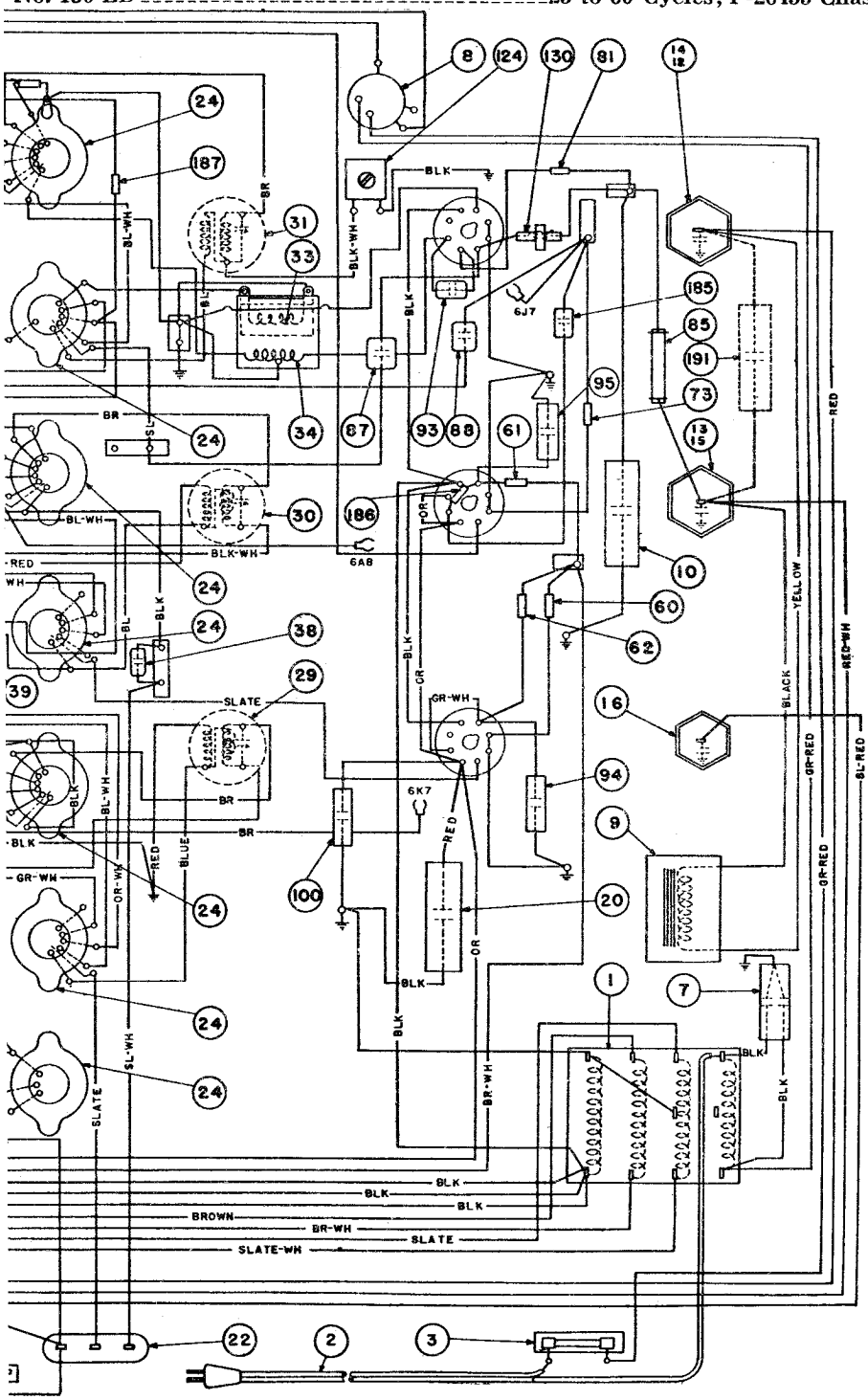

CIRCUIT DESCRIPTION

The No. 150 Receiver is a twelve tube, "Adjustable High Fidelity" receiver employing metal tubes, including the new "Beam" power tubes. There are five tuning ranges in this receiver, one of which is the Ultra-Short Wave range. This range is also referred to as the Ultra-High Frequency (U. H. F.) range and also as the "D" band. This receiver uses a Carpinchoe high fidelity dynamic speaker, and has incorporated in it the exclusive "Patent Applied For", Stromberg-Carlson "Tri-Focal" tuning system and the exclusive Stromberg-Carlson Acoustical Laboratories' revolutionary new development, the "Acoustical Labyrinth". This new device extends the bass response, provides reproduction only from the front of the cabinet, and eliminates all cabinet resonance. Audio reproduction is further improved in this receiver by employing sound diffusing vanes in front of the loud speaker opening which distribute the higher pitched tones, thereby providing excellent reproduction in all parts of the room by spreading out these directional frequencies.

Maximum selectivity between adjacent stations located in the standard broadcast band is obtained by the use of an additional tuned radio frequency ("Bi-resonator") circuit. When either the "X", "B", "C", or "D" ranges are in operation, this additional tuned radio frequency circuit is automatically cut out of the receiver circuit. Adjustable high fidelity is obtained from this receiver by means of the variable band width, intermediate frequency transformers which are used in the two intermediate amplifier stages.

MODEL 160 Series
Circuit Data
Chassis Wiring

STROMBERG-CA

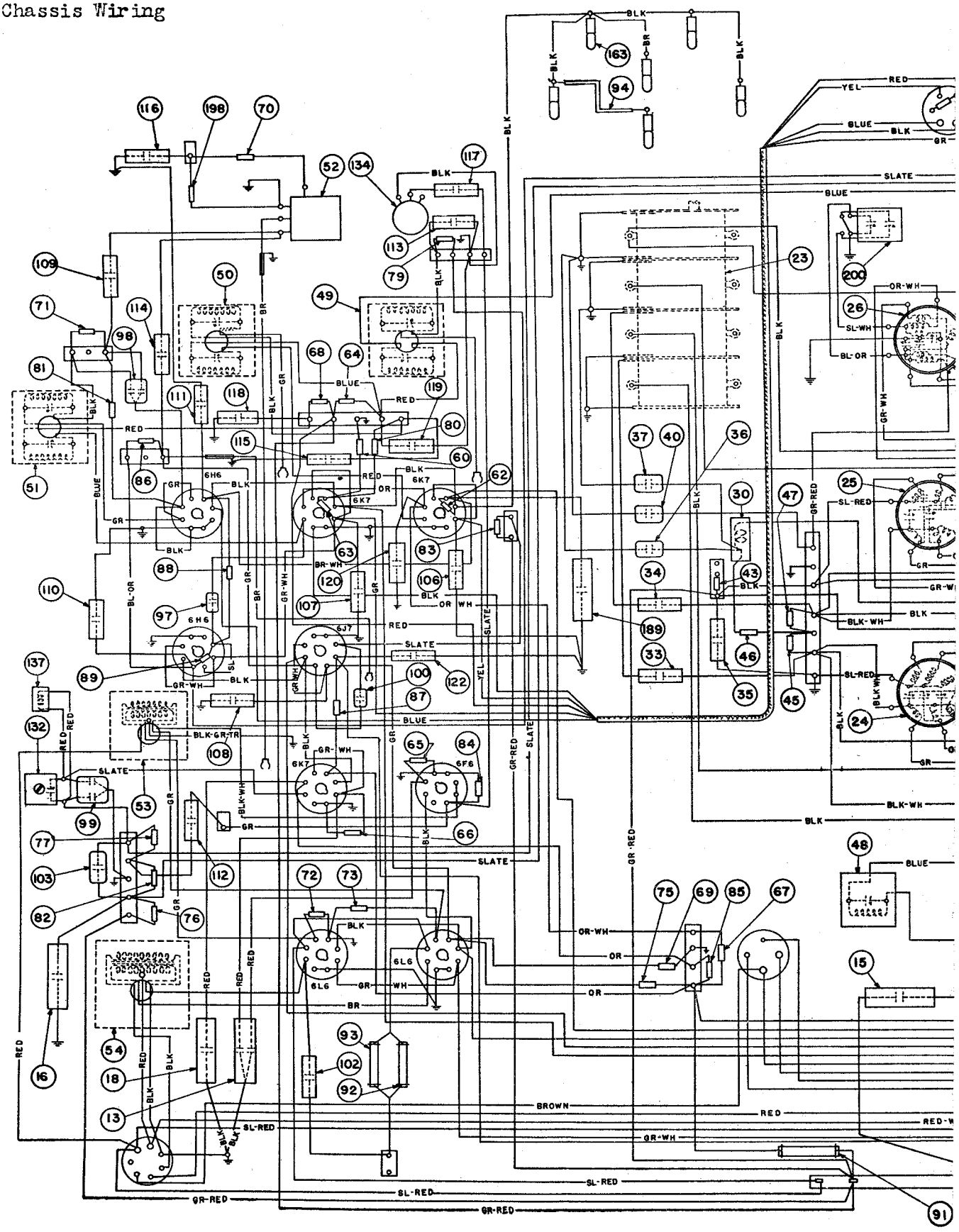

Fig. 3. Wiring Diagram of Chassis

©John F. Rider, Publisher

ELECTRICAL SPECIFICATIONS

Type of Circuit	Superheterodyne
Tuning Ranges	X—145 to 370 Kc.; A—530 to 1700 Kc.; B—1700 to 5600 Kc.; C—5600 to 18,000 Kc.; D—18,000 to 60,000 Kc.
Number and Types of Tubes	4 No. 6K7, 1 No. 6A8, 2 No. 6J7, 2 No. 6H6, 1 No. 6F6, 2 No. 6L6, 1 No. 6E5, 1 No. 5Z3
Power Supply Voltage	105 to 125 Volts
Power Supply Frequency	25 to 60 Cycles and 50 to 60 Cycles
Input Power Rating—	
No. 160-L	170 Watts
No. 160-P	214 Watts
Frequency of Intermediate Amplifier	465 Kilocycles

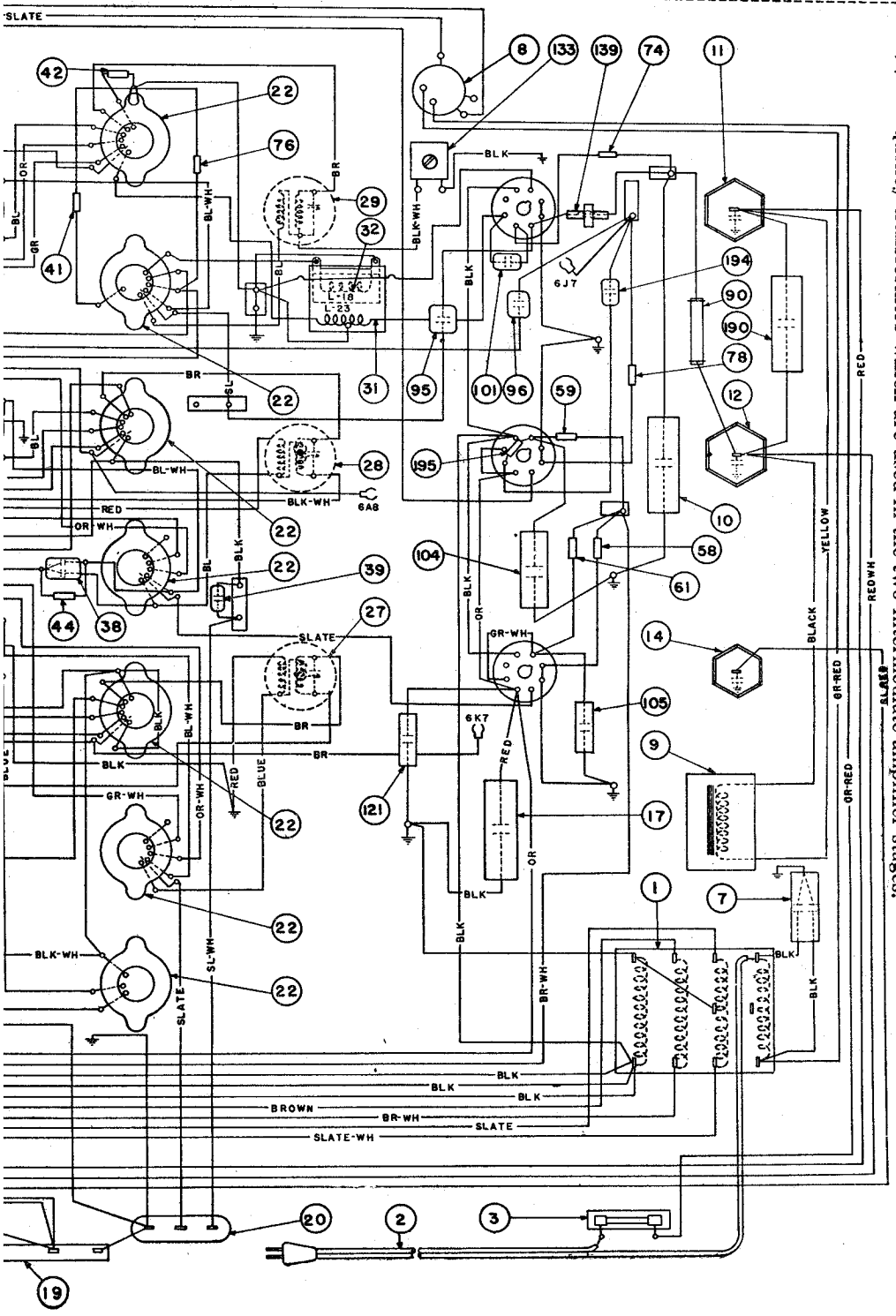

FOR OTHER DATA
SEE INDEX

The No. 160 Radio Receiver is a fourteen tube, "Adjustable High Fidelity" receiver employing metal tubes, including the new "Beam" power tubes. There are five tuning ranges in this receiver, one of which is the Ultra-Short Wave range. This range is also referred to as the Ultra-High Frequency (U. H. F.) range and also as the "D" band. This receiver uses a Carpinchoe high fidelity dynamic speaker, and has incorporated in it the exclusive "Patent Applied for", Stromberg-Carlson "Tri-Focal" tuning system and the exclusive Stromberg-Carlson Acoustical Laboratories' revolutionary new development, the "Acoustical Labyrinth". This new device extends the bass response, provides reproduction only from the front of the cabinet, and eliminates all cabinet resonance. Audio reproduction is further improved in this receiver by employing sound diffusing vanes in front of the loud speaker opening which distribute the higher pitched tones, thereby providing excellent reproduction in all parts of the room by spreading out these directional frequencies.

This receiver is also equipped with an "automatic tone control" circuit, which operates automatically to reduce the high frequency noise which is present when the receiver is tuned to weak signals. The tube which operates in this automatic tone control circuit is indicated on the schematic wiring diagram.

In addition to the above features, the No. 160-P Receiver is furnished with a highly efficient "Automatic Record Changer" Phonograph Unit, which is equipped with an entirely new type of pick-up suspension device.

Maximum selectivity between adjacent stations located in the standard broadcast band is obtained by the use of an additional tuned radio frequency ("Bi-resonator") circuit. When either the "X", "B", "C", or "D" ranges are in operation, this additional tuned radio frequency circuit is automatically cut out of the receiver circuit. Adjustable high fidelity is obtained from this receiver by means of the variable band width, intermediate frequency transformers which are used in the two intermediate amplifier stages.

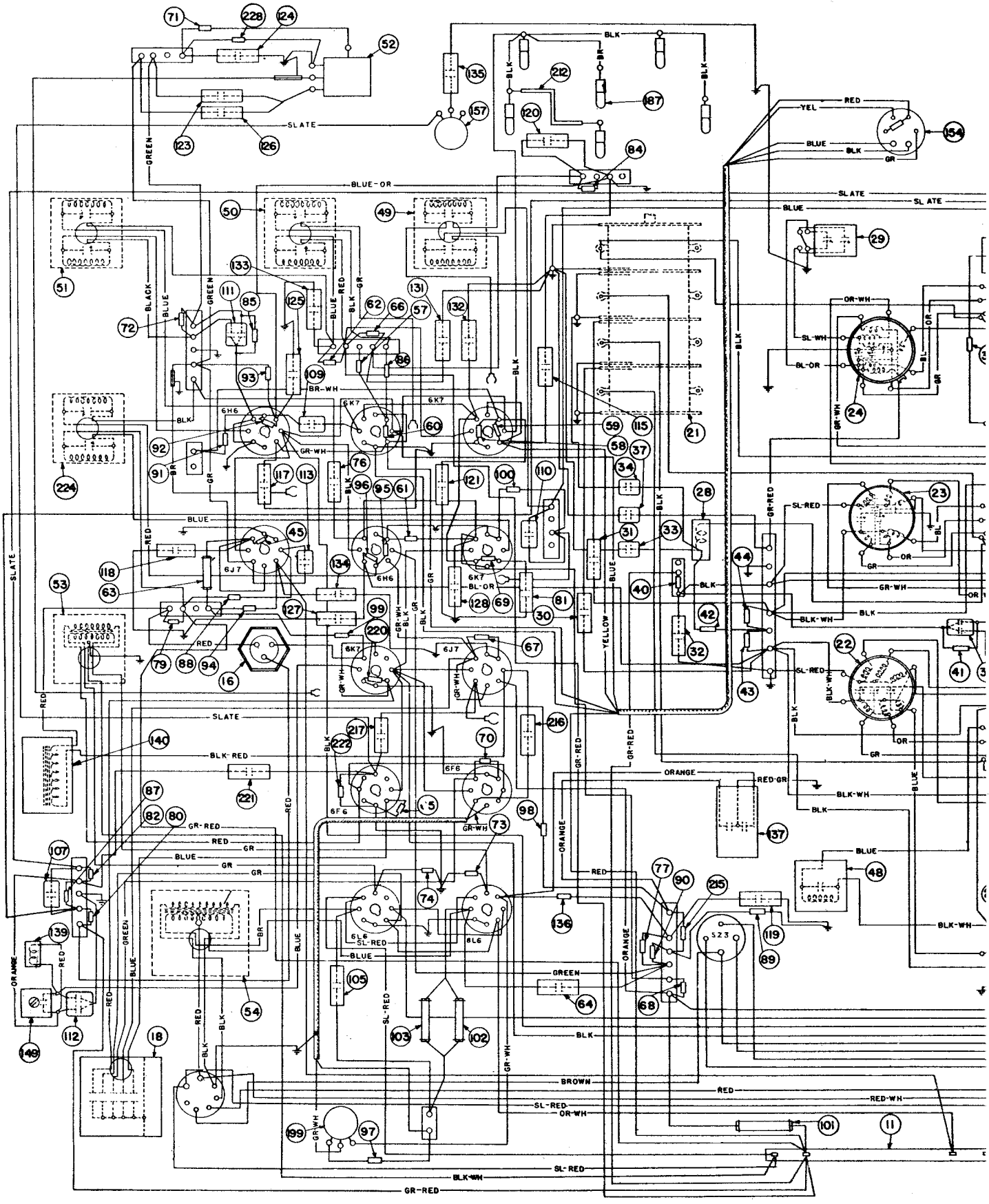

©John F. Rider, Publisher

TEL. MFG. CO.

MODEL 180 Series
Chassis Wiring

ELECTRICAL SPECIFICATIONS

Type of Circuit	Superheterodyne
Tuning Ranges	X—145 to 370 Kc.; A—530 to 1700 Kc.; B—1700 to 5600 Kc.; C—5600 to 18,000 Kc.; D—18,000 to 60,000 Kc.
Number and Types of Tubes	5 No. 6K7, 1 No. 6A8, 3 No. 6J7, 2 No. 6H6, 2 No. 6F6, 2 No. 6L6, 1 No. 6E5, 1 No. 5Z3
Power Supply Voltage	105 to 125 Volts
Power Supply Frequency	25 to 60 Cycles and 50 to 60 Cycles
Input Power Rating	170 Watts
Frequency of Intermediate Amplifier	465 Kilocycles

APPARATUS SPECIFICATIONS

No. 180-L	50 to 60 Cycles; P-26641 Chassis Assembly; P-26170 Loud Speaker
No. 180-LB	25 to 60 Cycles; P-26642 Chassis Assembly; P-26170 Loud Speaker

FOR OTHER DATA
SEE INDEX

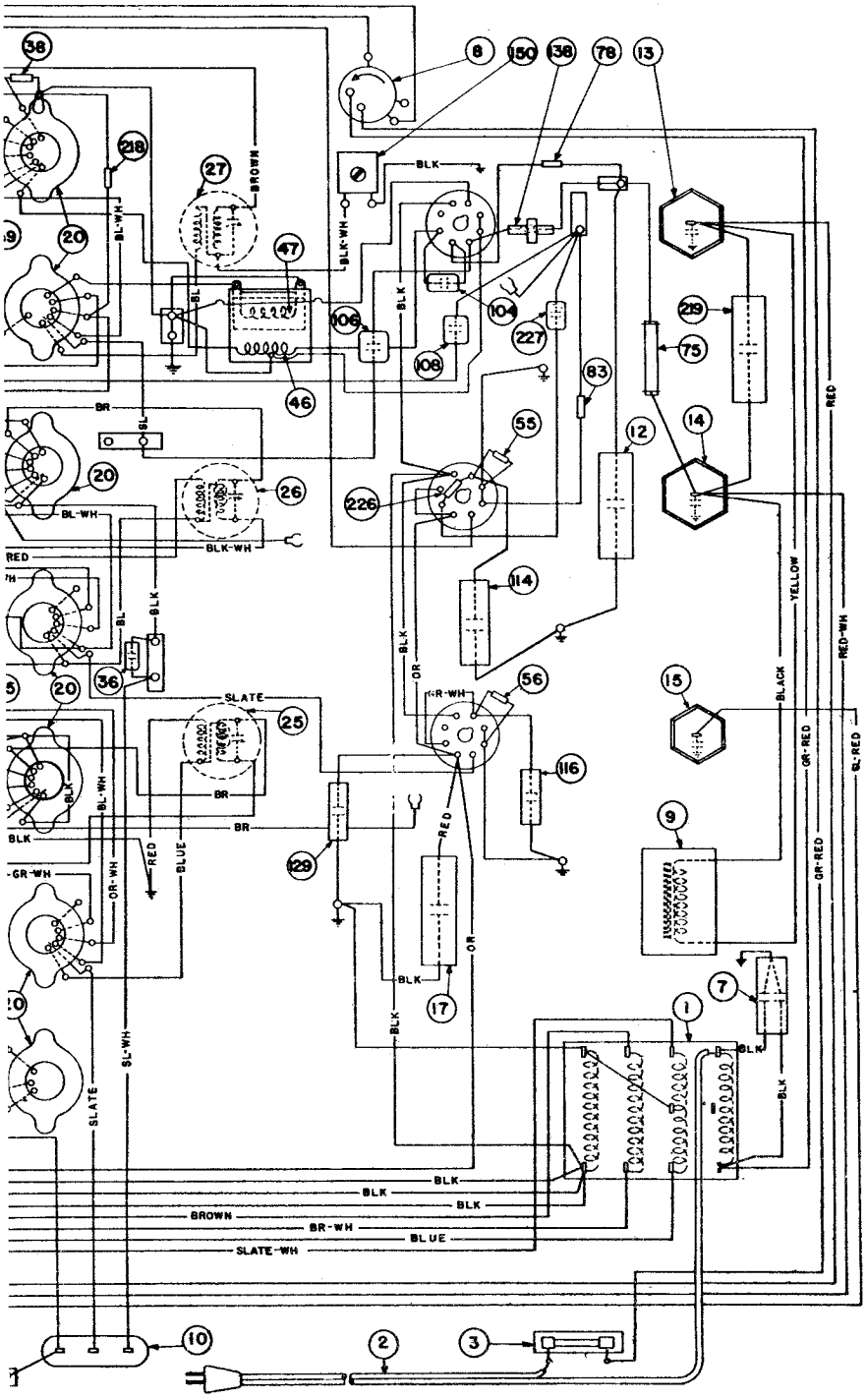

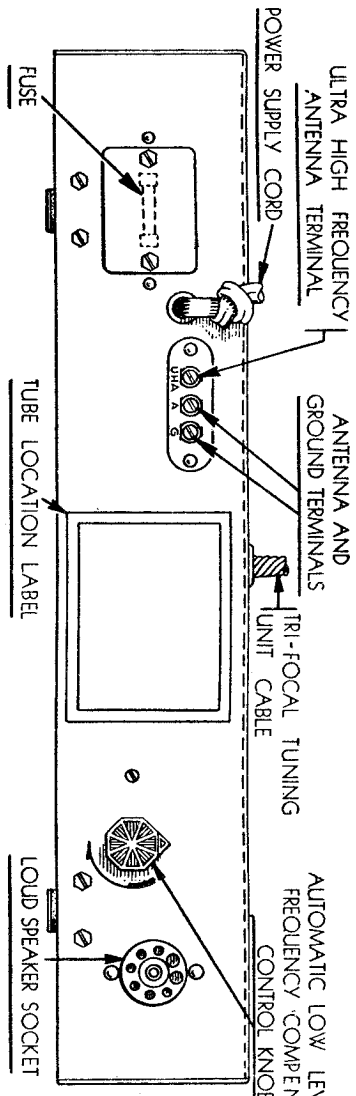

Fig. 1. Location and Operation of Control for Low Level Bass Compensating Circuit.

STROMBERG-CARLSON TEL. MFG. CO.

MODEL 180 Series
Chassis Views

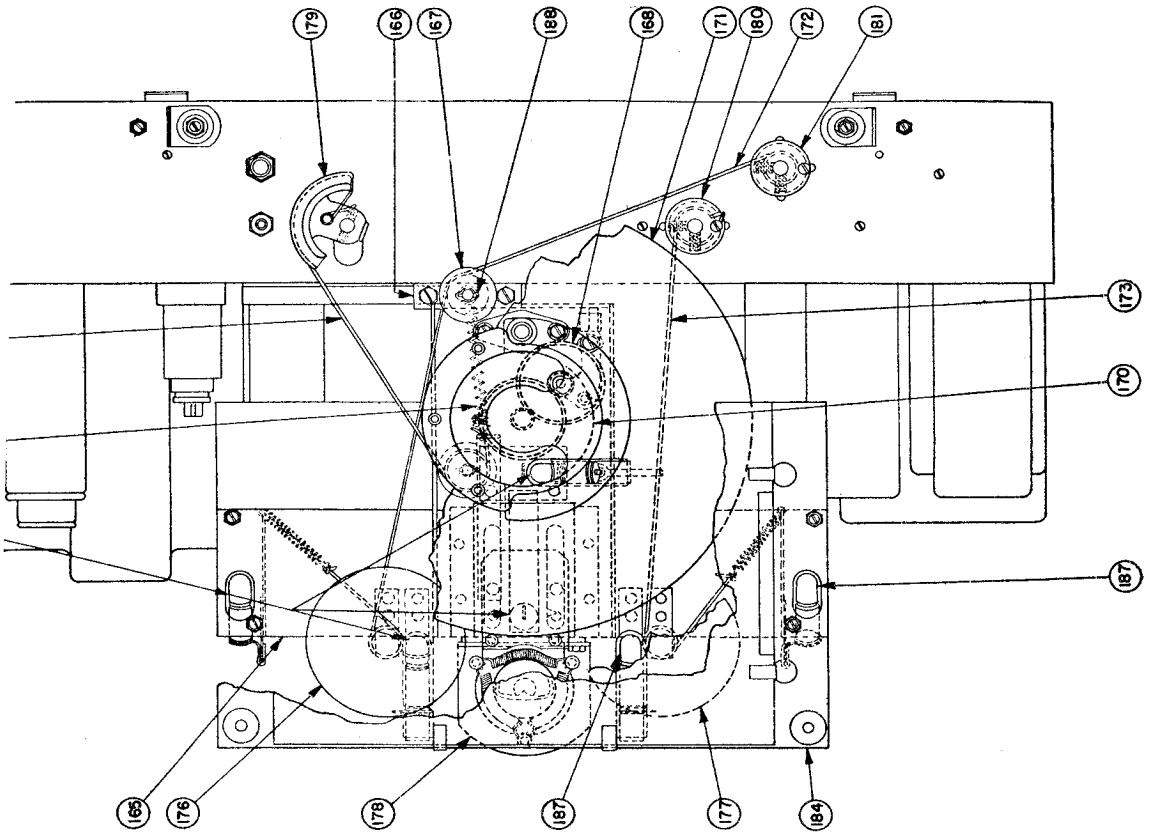

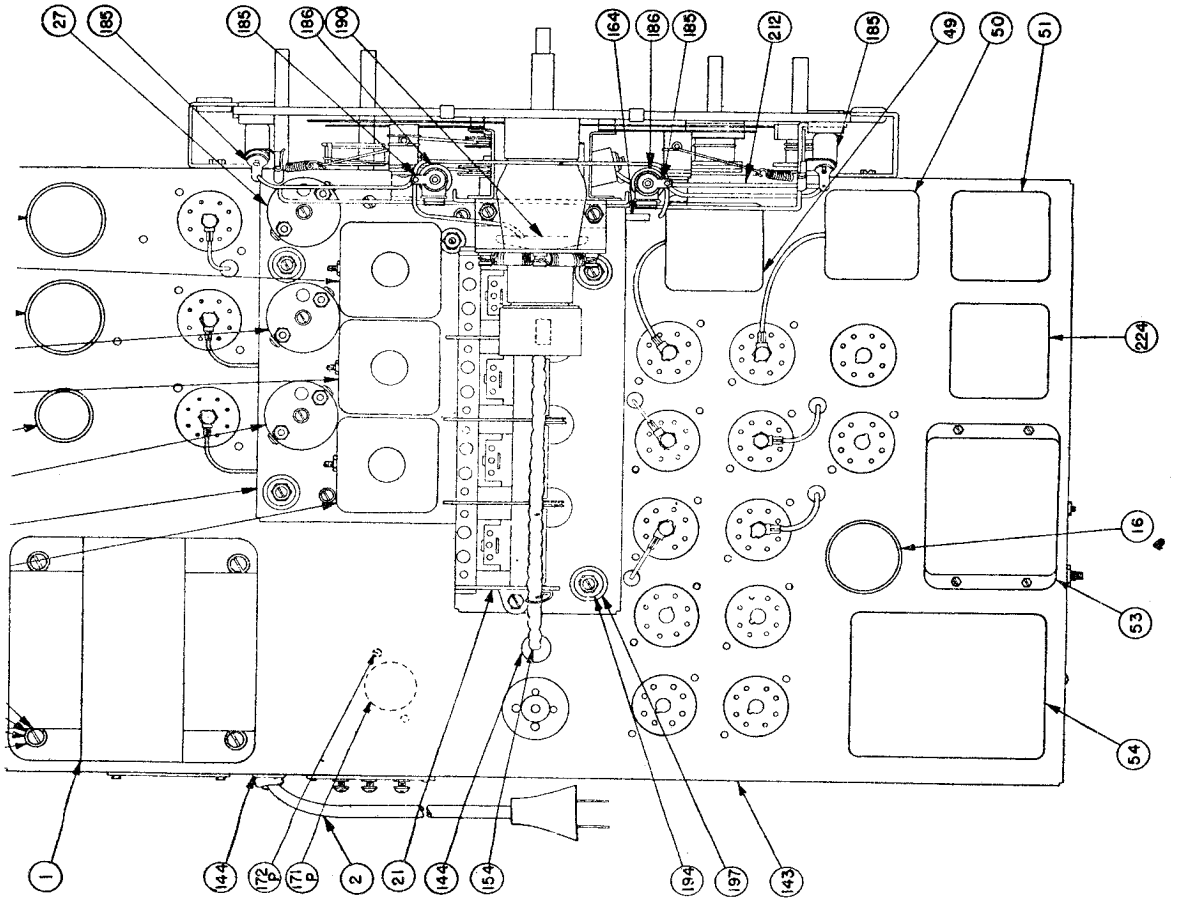

MODEL 225 AC-DC
Chassis Wiring

STROMBERG-CARLSON TEL. MFG. CO.

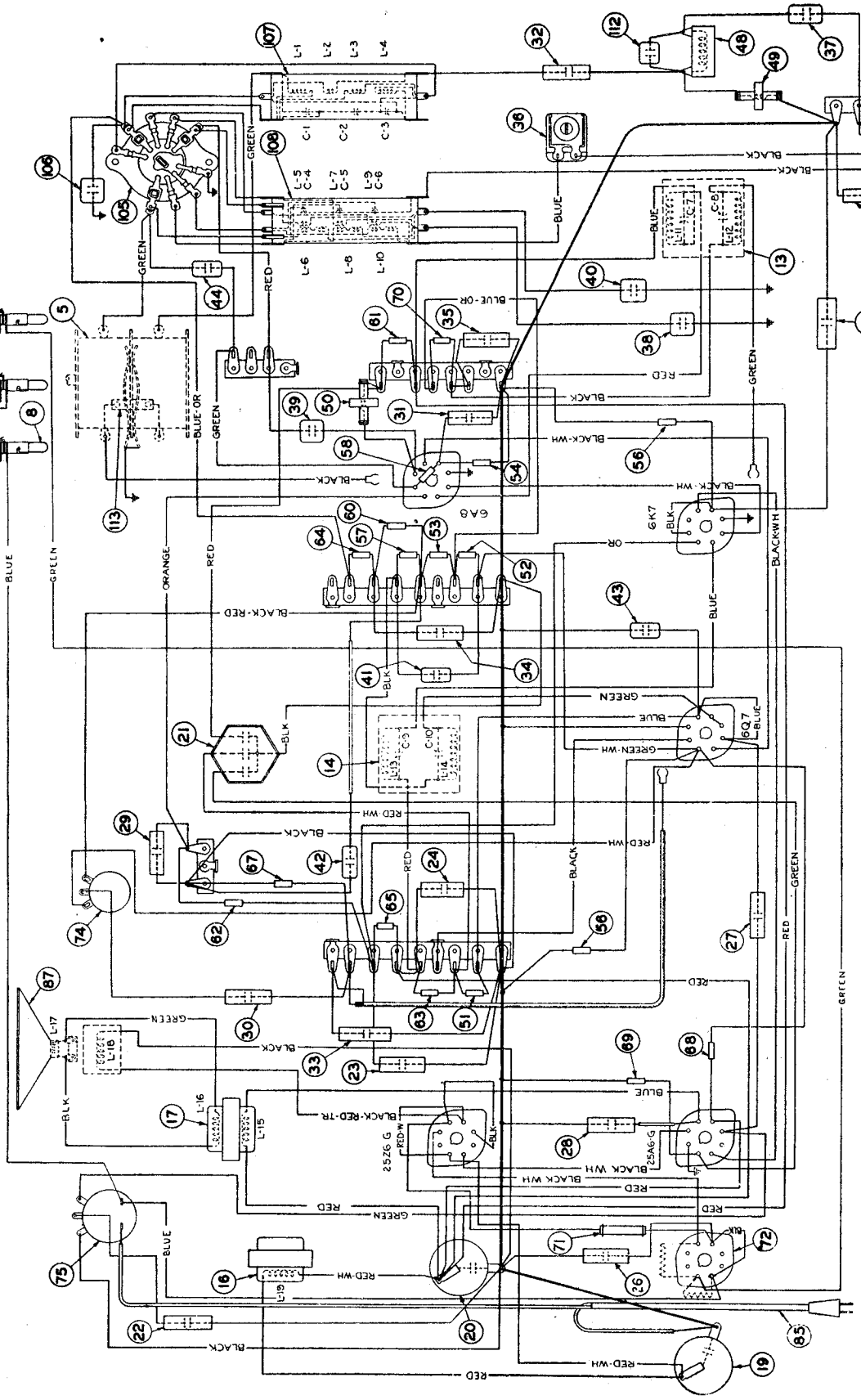

Fig. 4. Chassis Assembly.

Type of Circuit	Superheterodyne
Tuning Ranges	A—540 to 1500 Kc.; B—1450 to 3500 Kc.; C—5600 to 18,000 Kc.
Number and Types of Tubes	1 No. 6A8, 1 No. 6K7, 1 No. 6Q7, 1 No. 25A6-G, 1 No. 25Z6-G
Voltage Rating	105 to 125 Volts
Power Frequency (For AC Operation)	50-60 Cycles
Input Power Rating	50 Watts
Intermediate Frequency	465 Kilocycles

©John F. Rider, Publisher

MODEL 228 Series
Chassis Wiring

STROMBERG-CARLSON TEL. MFG. CO.

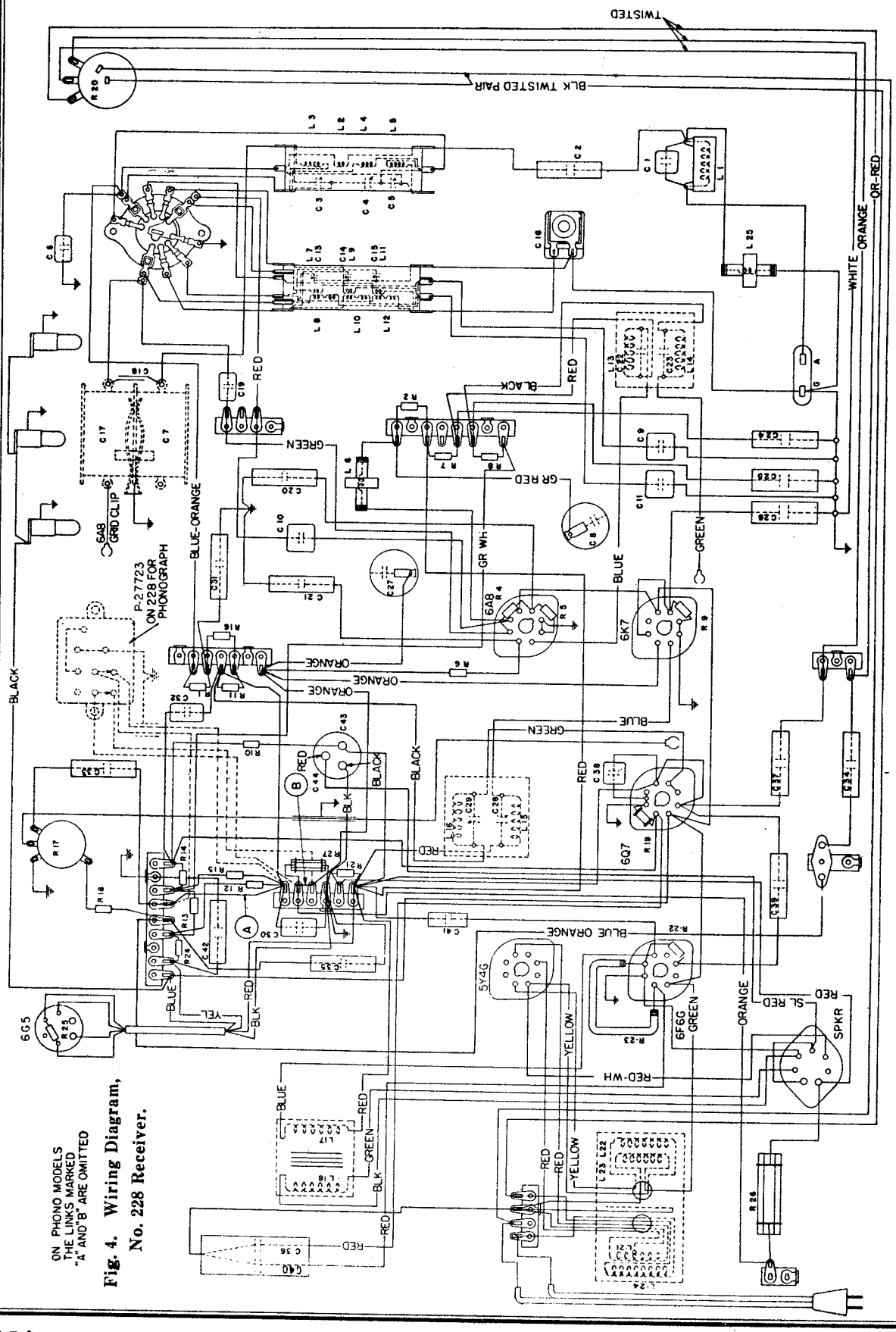

ON PHONO MODELS
THE LINKS MARKED
"A" AND "B" ARE OMITTED

Fig. 4. Wiring Diagram, No. 228 Receiver.

FOR OTHER DATA
SEE INDEX

No. 228-H Receiver ....50 to 60 Cycles; P-27543 Chassis; P-27557 Loud Speaker
No. 228-HB Receiver ..25 to 60 Cycles; P-27544 Chassis; P-27557 Loud Speaker
No. 228-L Receiver ....50 to 60 Cycles; P-27543 Chassis; P-27605 Loud Speaker
No. 228-LB Receiver...25 to 60 Cycles; P-27544 Chassis; P-27605 Loud Speaker

©John F. Rider, Publisher

MODEL 228 Series
Chassis Views

STROMBERG-CARLSON TEL. MFG. CO.

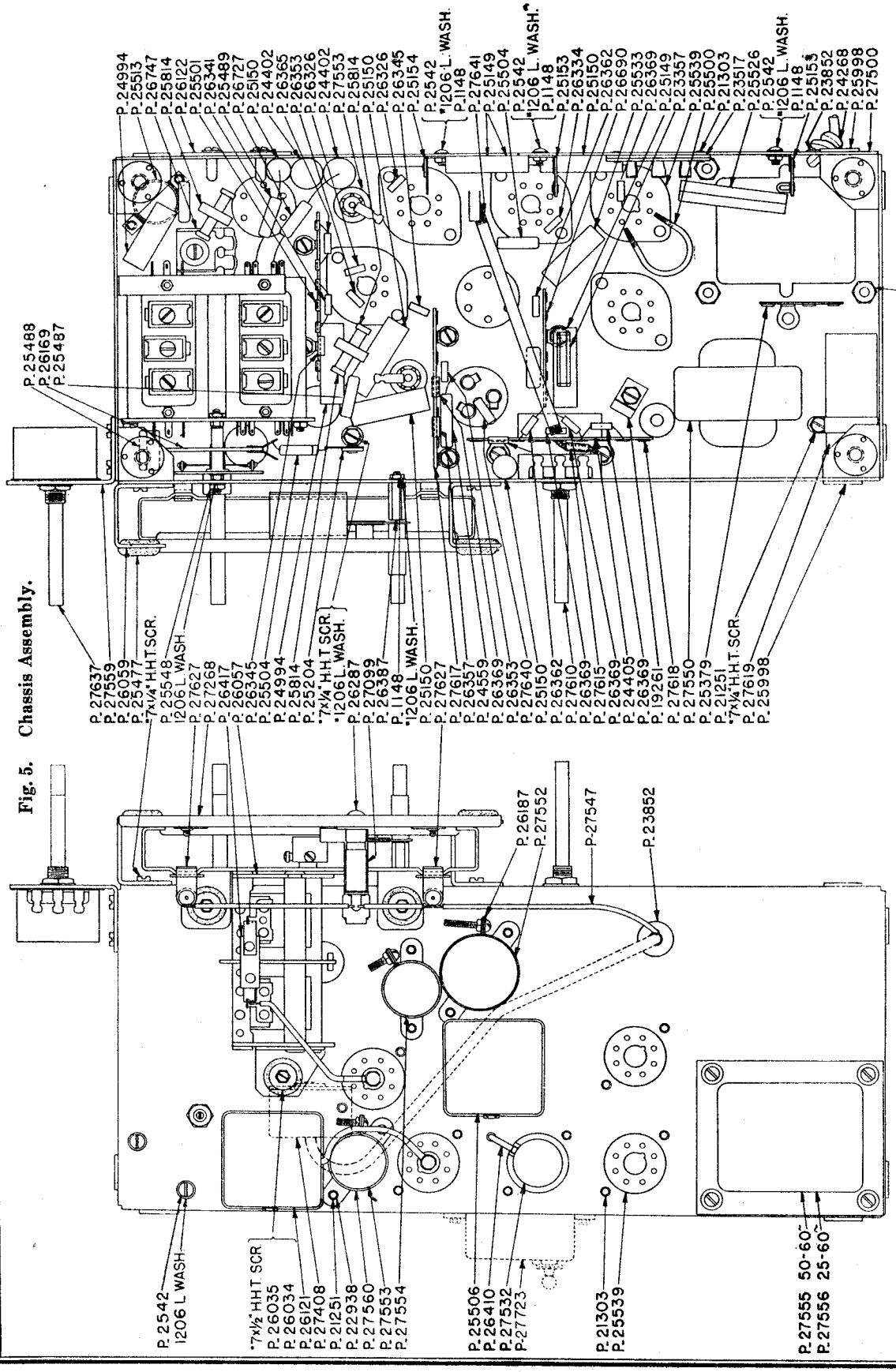

Fig. 5. Chassis Assembly.

Tuning Ranges	A—540 to 1500 Kc.; B—1450 to 3500 Kc.; C—5900 to 18,000 Kc.
Number and Types of Tubes	1 No. 6A8, 1 No. 6K7, 1 No. 6F6G, 1 No. 6Q7, 1 No. 6G5, 1 No. 5Y4G
Voltage Rating	105 to 125 Volts, A. C.
Input Power Frequency	25 to 60 Cycles and 50 to 60 Cycles
Input Power Rating	56 Watts
Frequency of Intermediate Amplifier	465 Kilocycles

©John F. Rider, Publisher

STROMBERG-CARLSON TEL. MFG. CO.

MODELS 235H, 235HB
235L, 235LB
Schematic, Specs.

Stromberg-Carlson No. 235 Radio Receivers

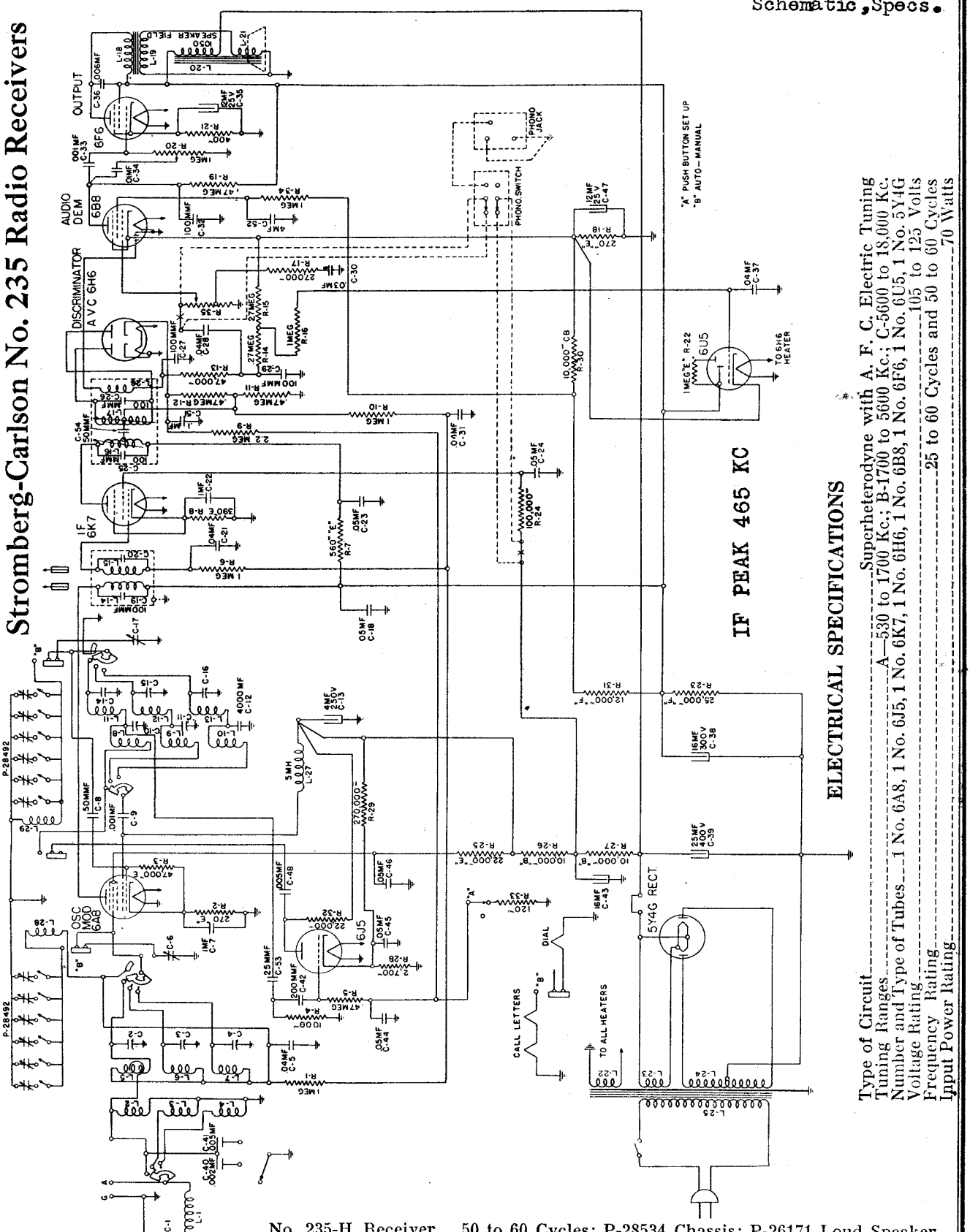

ELECTRICAL SPECIFICATIONS

Type of Circuit	Superheterodyne with A. F. C. Electric Tuning
Tuning Ranges	A—530 to 1700 Kc.; B-1700 to 5600 Kc.; C-5600 to 18,000 Kc.
Number and Type of Tubes	1 No. 6A8, 1 No. 6J5, 1 No. 6K7, 1 No. 6H6, 1 No. 6B8, 1 No. 6F6, 1 No. 6U5, 1 No. 5Y4G
Voltage Rating	105 to 125 Volts
Frequency Rating	25 to 60 Cycles and 50 to 60 Cycles
Input Power Rating	70 Watts

No. 235-H Receiver—50 to 60 Cycles; P-28534 Chassis; P-26171 Loud Speaker
No. 235-HB Receiver—25 to 60 Cycles; P-28535 Chassis; P-26171 Loud Speaker
No. 235-L Receiver—50 to 60 Cycles; P-28534 Chassis; P-27375 Loud Speaker
No. 235-LB Receiver—25 to 60 Cycles; P-28535 Chassis; P-27375 Loud Speaker

©John F. Rider, Publisher

MODELS 235H,235HB
235L,235LB STROMBERG-CARLSON TEL. MFG. CO.

Chassis Wiring

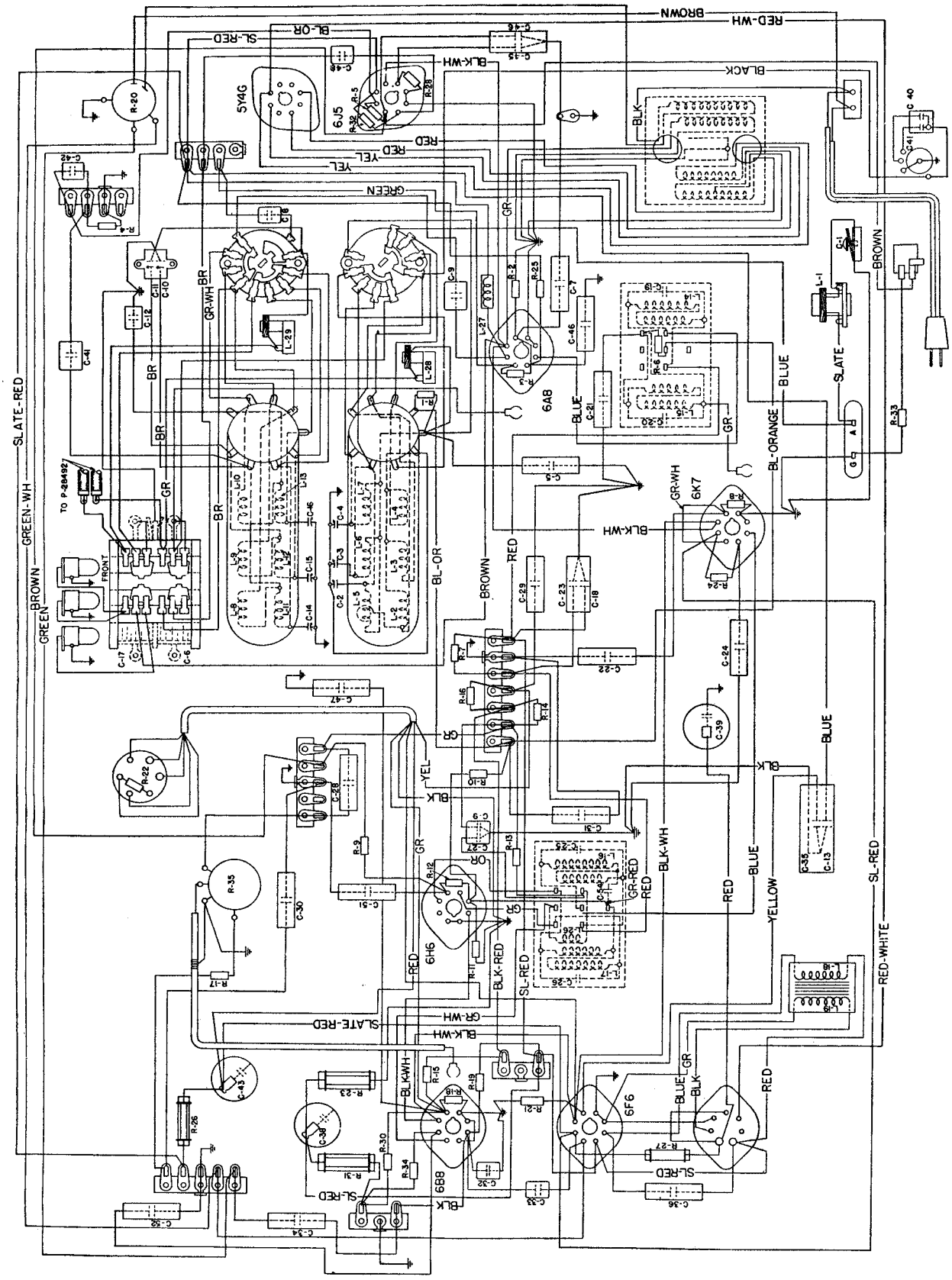

Wiring Diagram, No. 235 Receiver.

©John F. Rider, Publisher

©John F. Rider, Publisher

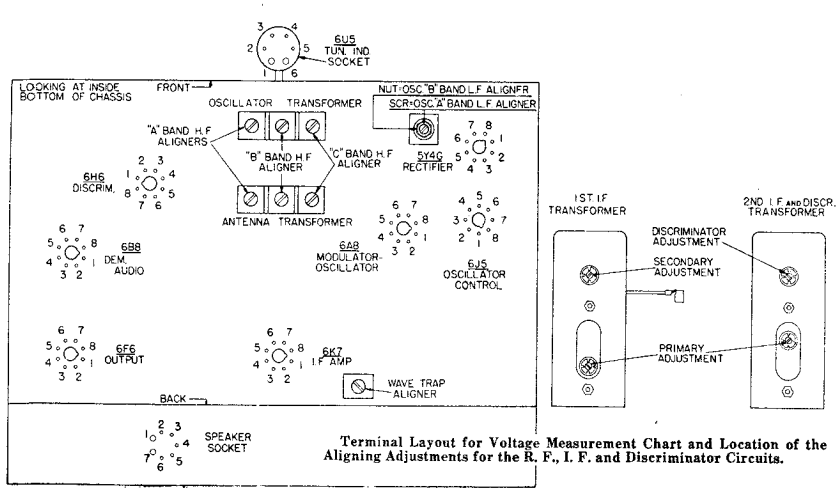

Terminal Layout for Voltage Measurement Chart and Location of the Aligning Adjustments for the R. F., I. F. and Discriminator Circuits.

NORMAL VOLTAGE READINGS

The various values of voltages listed in the following table are obtained by measuring between the various tube socket contacts and the chassis base, with the tubes in their respective sockets. The receiver is, therefore, in operation when the measurements are made. Figure 1, shows the terminal layout of the sockets with the proper terminal numbers.

Voltages are given for a line voltage of 120 volts, and allowance should be made for differences when the line voltage is higher or lower. A meter having a resistance of 1000 ohms per volt should be used for measuring the D. C. voltages. Voltage values shown are those obtained on the lowest possible scale of a meter having the following ranges: 0-2.5, 0-10, 0-100, 0-250, 0-500, 0-1000 volts except when an asterisk appears after any given voltage value in which the 250 volt scale was used.

			Terminals of Sockets								*Heater Voltages Between Heater Terminals*	
Tube	*Circuit*	*Cap*	1	2	3	4	5	6	7	8	*Socket Terminal Numbers*	*Volts*
6A8	Osc.—Mod.	0	0	0	+255	+76	—18	+160	*6.1*	+2	2-7	*6.1*
6J5	Osc. Control	—	0	0	+120	0	0	+160	*6.1*	+5.4	2-7	*6.1*
6K7	I. F. Amp.	0	0	0	+255	+76	+2.4	+240	*6.1*	+2.4	2-7	*6.1*
6H6	Discriminator—A. V. C.	—	0	0	0	0	0	0	*6.1*	0	2-7	*6.1*
6B8	Demodulator—Audio Amp.	0	0	0	+48*	0	0	+20*	*6.1*	+3.4	2-7	*6.1*
6F6	Audio Output	—	0	0	+245	+255	0	+240	*6.1*	+18	2-7	*6.1*
6U5	Tuning Indicator	—	*6.1*	+8*	0	+255	+3.4	0	—	—	1-6	*6.1*
5Y4-G	Rectifier	—	0	0	*338*	0	*338*	0	+340	+340	7-8	*4.8*
Speaker Socket		—	+340	0	0	+340	+340	0	+300	—		

A. C. voltages are indicated by italics. Receiver tuned to 1000 Kc., no signal

ALIGNMENT DATA

All alignment adjustments are accurately made at the factory on these receivers, and ordinarily no readjustments are necessary. However, should it become necessary to make any readjustments, the procedure given in these instructions should be carefully followed. The preferred method of aligning these receivers is by the use of a suitable cathode ray oscillograph and frequency modulator unit in conjunction with the standard signal generator.

To accurately align circuits in these receivers, it is necessary to use a high grade signal generator capable of being modulated 30% and having an output voltage of at least 100,000 microvolts; it will also be necessary to have this output voltage controlled so that only a few microvolts may be fed into the receiver. In conjunction with the signal generator, a sensitive output meter should be used for determining the maximum signal voltage developed across the voice coil of the loud speaker. In addition to this equipment, it will be necessary when making a final adjustment of the "Discriminator" tuned circuit to use a milliammeter having a range of 0 to 10 milliamperes connected in series with the cathode of the 6J5 oscillator control tube by means of an adaptor plug inserted between the tube and its socket. The leads to the meter should not be longer than 15", and should be shunted at the socket connections by a capacitor of not less than 0.25 Mfd.

In order to make the aligning adjustments in an easy and satisfactory manner, it is recommended that the Stromberg-Carlson P-27657 and P-27658 aligning tools be used.

Before proceeding with the alignment of any circuits in these receivers, except when specifically directed, be sure that the "Signal Admission Control" is set for the maximum sensitivity position, and that the "Manual-Electric" control knob is set to the "Off" position. The "Off-On-Tone" control should also be set for the "Normal" position. In making any alignment adjustments always adjust the test oscillator's output voltage to the minimum value where a good alignment may still be obtained, except when specifically directed in these instructions. Figures Nos. 1 and 2, show the location of all the aligning capacitors or adjustments for this receiver. It will not be necessary to remove the chassis in this receiver from its cabinet in order to make any alignment adjustments. The alignment adjustments for the Intermediate Frequency circuits are accessible from the rear of the receiver, and the adjustments for the Radio Frequency circuits are accessible through apertures located in the bottom metal base plate of the chassis. These apertures are easily accessible through the bottom of the cabinet shelf. **Never align any of these receivers without having the metal base plate fastened to the chassis base.**

Dial Adjustment

Before aligning the circuits of these receivers, the tuning dial must be properly aligned to "track" with the gang tuning capacitor. To check whether the dial is set correctly with respect to the gang tuning capacitor, rotate the "Rapid Station Selector" knob in a clockwise direction so that the gang tuning capacitor is set to its maximum capacity position. Then, with the receiver turned "on", the illuminated dial indicator line should be exactly centered over the dial alignment lines (black lines) which are located at the extreme low frequency end of each scale on the dial. If these lines do not center over the illuminated dial indicator line, loosen the two set screws located on the hub of the dial. Then, rotate the dial so that these alignment lines are centered over the illuminated dial indicator line. The two set screws of the dial hub should then be securely tightened.

Intermediate Frequency Adjustments

The intermediate frequency used in these receivers is 465 kilocycles. Because of the necessity of obtaining the proper shape of resonance curve of these stages, it is recommended that unless it is absolutely essential, these I. F. adjustments be untouched. In the factory these adjustments are made using a visual system

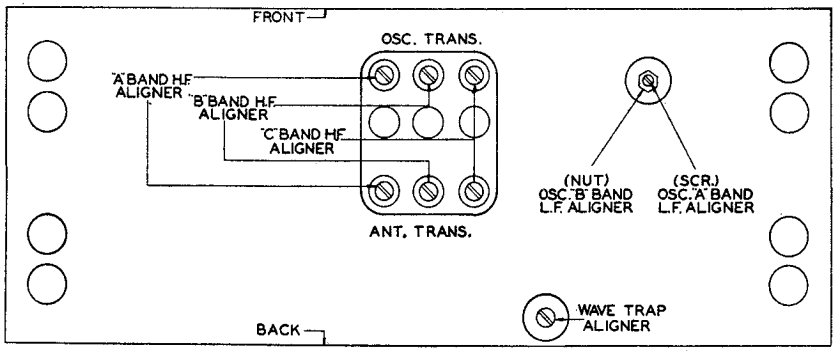

View Through Chassis Mounting Shelf Showing Adjusting Screws for R. F. Aligning Capacitors.

which allows the operator to see the exact shape of the resonance curve. For this reason it is best to have these adjustments made at the factory. However, in the case where this cannot be done, the following procedure should be followed.

1. Operate the Range Switch of the receiver to the Standard Broadcast range position and set the tuning dial to its extreme low frequency position. Set the "Manual-Electric" control knob to the "Manual" position, and the "Off-On-Tone" control knob to its normal position.

   CAUTION: **Never attempt to align the R. F. or I. F. circuits of this receiver with the "Manual-Electric" control knob set at the "Electric" position unless specifically directed in the following paragraphs. Also, do not make any aligning adjustments of the R. F., I. F., or "Discriminator" circuits with the A. F. C. switch (which is located on rear of the chassis base) set at the "set-up" position.**

2. Apply between the chassis base (or ground binding post) of the receiver and the grid of the No. 6A8 modulator-oscillator tube, a modulated signal of 465 kilocycles from the signal generator, using a 0.1 mfd. capacitor in series with the connection between the output terminal of the signal generator and the grid of the No. 6A8 tube. Do not remove the chassis grid lead connecting to this tube. The ground (or low side) terminal of the signal generator should be connected to either the chassis base or the ground binding post.

3. Now, noting from Fig. 1, the alignment adjustments for the First and Second I. F. transformers, align the I. F. circuits in the following order:

MODELS 235H,235HB
235L,235LB STROMBERG-CARLSON TEL. MFG. CO.

Alignment,Phono.
Tuner Adjustments

Adjust the Second I. F. transformer primary circuit for maximum output.

Adjust the First I. F. transformer primary circuit for maximum output.

Adjust the First I. F. transformer secondary circuit for maximum output.

Carefully make all of the above adjustments, watching carefully the output meter so that the peak reading is obtained for each adjustment. As each adjustment is made reduce the output of the test oscillator as required.

4. To adjust the Discriminator circuit proceed as follows:

Check the position of the "Manual-Electric" control knob which should be set to the "Manual" position.

CAUTION: **Before adjusting this circuit be sure that the I. F. amplifier is tuned exactly to 465 kilocycles.** With the signal generator still set at a frequency of 465 kilocycles, adjust the signal generator's output control so that a signal of 50,000 to 100,000 nicrovolts is fed into the No. 6A8 modulator-oscillator tube. Now, observe the reading of the milliammeter which is connected in series with the cathode of the No. 6J5 oscillator control tube, and rotate the "Manual-Electric" control knob to the "Electric" position, observing whether there is any difference in the reading of the milliammeter. When this circuit is correctly adjusted, there should be no difference in the reading of the milliammeter when the "Manual-Electric" control knob is rotated from the "Manual" to the "Electric" position. If there is any difference in the milliammeter reading while rotating this control knob from the "Manual" to the "Electric" position, and vice versa, adjust the "Discriminator" circuit by means of the screw adjustment located on the 2nd I. F.—Discriminator transformer until the meter reading has the same value regardless of whether the "Manual-Electric" control knob is rotated to the "Manual" or "Electric" position. When this condition is obtained, the Discriminator circuit is properly adjusted.

Radio Frequency Adjustments

The alignment of the radio frequency circuits in these receivers should be very carefully made and in the order specified.

When making any aligning adjustments of these circuits, the "Manual-Electric" control knob should be rotated to the "Manual" position, and the "Off-On-Tone" control knob should also be set for "Normal" operation.

Alignment of Short Wave Range (Also Referred to as "C" Band)

In aligning the radio frequency circuits for this range, replace the 0.1-microfarad capacitor which was placed in series with the test oscillator's output lead for the I. F. alignments, with a 400-ohm carbon type resistor. This lead should then be connected to the antenna binding post located on the rear of the receiver chassis. The ground terminal (or low side) of the test oscillator should be connected to the ground binding post on the receiver.

1. Operate the Range Switch on the receiver chassis to the "C" range position, and set the test oscillator's frequency and the receiver's tuning dial to 17 megacycles.
2. Adjust the oscillator's "C" band high frequency aligner for maximum output.
3. Adjust the antenna's "C" band high frequency aligner for maximum output, at the same time rotate the gang tuning capacitor back and forth through resonance until maximum output is obtained.

Alignment of Medium Wave Range (Also Referred to as "B" Band)

In aligning the radio frequency circuits for this range, use the same artificial antenna (400-ohm carbon type resistor) in series with the output terminal of the test oscillator as was used for aligning the short-wave range.

1. Operate the Range Switch on the receiver chassis to the "B" range position, and set the test oscillator's frequency and the receiver's tuning dial to 5 megacycles.
2. Adjust the oscillator's "B" band high frequency aligner for maximum output.
3. Adjust the antenna's "B" band high frequency aligner for maximum output, and at the same time rotate the gang tuning capacitor back and forth through resonance until maximum output is obtained.
4. Set the test oscillator's frequency and the receiver's tuning dial to 1.8 megacycles.
5. Adjust the oscillator's "B" band low frequency aligner (series aligner), and at the same time rotate the gang tuning capacitor back and forth through resonance until maximum output is obtained.
6. Reset both the test oscillator's frequency and the receiver's tuning dial to 5 megacycles and repeat operations Nos. 2 and 3.

Alignment of Standard Broadcast Range (Also Referred to as "A" Band)

In aligning the radio frequency circuits for this range, replace the 400-ohm carbone type resistor in series with the test oscillator's output lead with a 200-micro-microfarad capacitor and align these circuits as follows:

1. **Operate the Range Switch to the "A" range position and set the test oscillator's frequency and the receiver's tuning dial to 1.4 megacycles.**
2. **Adjust the oscillator's "A" band high frequency aligner for maximum output.**
3. **Adjust the antenna's "A" band high frequency aligner for maximum output.**
4. **Set the test oscillator's frequency and the receiver's tuning dial to 0.6 megacycles.**
5. **Adjust the oscillator's "A" band low frequency aligner (series aligner) for maximum output, and at the same time rotate the gang tuning capacitor slightly back and forth through resonance until maximum output is obtained.**
6. **Reset both the test oscillator's frequency and receiver's tuning dial to 1.4 megacycles and repeat operations Nos. 2 and 3.**

Wave Trap Adjustment

In adjusting the wave trap circuit, the "Signal Admission Control" should be set for the most sensitive position (shaft rotated in the most counter-clockwise direction). Set the Range Switch of the receiver to the "A" range position, the tuning dial to 1000 kilocycles, and the "Manual-Electric" control knob to the "Manual" position. Connect a 200-micro-microfarad capacitor in series with the output terminal of the modulated test oscillator and the antenna binding post on the receiver, and the ground terminal of the test oscillator to the ground binding post on the receiver. Then, with the modulated test oscillator set at the frequency of the intermediate amplifier, 465 kilocycles, supply a fairly strong signal to the receiver and adjust the wave trap aligner until a minimum indication is obtained on the output meter.

PROCEDURE FOR OBTAINING REPRODUCTION FROM PHONOGRAPH RECORDS

In order to obtain reproduction of phonograph records in conjunction with the No. 235 Receiver, the following instructions should be followed.

To equip these receivers for phonograph operation, it will be necessary to purchase and install in the receiver a Stromberg-Carlson, P-28120 Switch Assembly. The rear of the chassis base of these receivers is already drilled for mounting this switch assembly. Complete instructions on how to install and operate this switch are furnished with each P-28120 Switch Assembly.

To obtain the best quality of phonograph reproduction when using an electric pick-up and phonograph unit with this receiver, a Stromberg-Carlson, No. 10 Record Player is recommended. This record player is equipped with a correctly designed single record playing motor unit, and uses a crystal type pick-up in conjunction with a specially equalized circuit.

If the Stromberg-Carlson No. 10 Record Player is not used and the electric pick-up to be used is of the high impedance type, it will be necessary to connect a low capacity shielded cable between the three-prong socket mounted in the P-28120 Switch Assembly and the pick-up. This shielded cable should be of the low capacity type, in order to prevent excessive cutting of high frequencies which is caused when a shielded cable having high capacity is used. The length of the shielded cable used should be kept as short as possible.

If a pick-up of the low impedance type is used, it will be necessary to connect a "matching transformer" between the three-prong socket mounted in the P-28120 Switch Assembly, and the pick-up. The transformer should be located as near to the receiver as possible, in which case it will not be necessary to use a shielded cable.

INSTRUCTIONS FOR SETTING UP ELECTRIC TUNING ARRANGEMENT

1. **Before proceeding to set-up the stations for electric tuning, the radio receiver should be turned "on" for approximately twenty to thirty minutes.**
2. **Set the Range switch control knob to the proper position for the "Broadcast" range (arrow pointing in direction of "Cream" dot).**
3. **Remove the list of station letters from the P-28781 package assembly which is tacked inside of the cabinet.**
4. **Remove the two screws which hold the escutcheon plate to the front panel.**
5. **Remove from the escutcheon frame the strip of transparent material and the strip of paper on which the six stars are printed.**
6. **Remove the tuning indicator unit from its normal operating position.**

   IMPORTANT: Always use the tuning indicator unit when setting up stations for electric tuning, in order to determine when resonance with the desired station is obtained.
7. **From the lists of stations, remove the call letters of the six stations which it is desired to set up for electric tuning. These six stations should preferably be selected and set-up in the daytime so that the best service will be obtained at all times.**

   CAUTION: Each button adjustment for electric tuning has assigned frequency limits. These limits are designated for each adjustment on the rear plate which covers the tuning adjustments and are visible when looking at the rear of the receiver. See Figure 5. The six stations should be selected so that the frequency of each station will be within the frequency limits assigned to one of the buttons.

   It will be noted that the station letters are printed on partly cut squares to facilitate ease in removing the desired station letters. In setting up these six favorite stations, the following order should be followed: Looking at the front of the receiver, the call letters of the station having the highest frequency should appear in the farthest left-hand square of the escutcheon frame, and then in successive order according to frequency the call letters of the remaining stations should be inserted into the other frames; the call letters of the station having the lowest frequency being inserted in the farthest right-hand square of the escutcheon frame. After the six station call letters have been inserted into the escutcheon frame, the transparent strip should be replaced over the station call letters, and the escutcheon plate then fastened into position by means of the two screws. The tuning adjustments for the six favorite stations can now be made starting with the station having the highest frequency and proceeding as follows:
8. **IMPORTANT. By the aid of a screwdriver, rotate the slotted shaft of the "A. F. C." switch, which is located on the rear of the chassis base, so that the slotted shaft points in the direction of the word, "Set-up" (maximum clockwise rotation). See Figure 5.**

©John F. Rider, Publisher

©John F. Rider, Publisher

9. Rotate the knob marked "Manual-Electric" (located on the front panel of the receiver) so that the arrow points in the direction of the word "Manual" and tune the receiver in the conventional manner by means of the station selector knobs to the station having the highest frequency (of the six selected stations) and note carefully the program which it is broadcasting. Then rotate the knob marked "Manual-Electric" so that the arrow points in the direction of the word "Electric".

10. Push the farthest left-hand button (looking at the front of the receiver) which should be the button for the station having the highest frequency provided the frequency of the station is within the designated frequency limits of the tuning adjustments for this button. See Figure 5. Then, looking at the rear of the receiver, rotate the screw of the oscillator tuning adjustment which is designated 1560 to 1000 kilocycles to the position where the desired station is received. In order to check whether the program being received is from the desired station, simply rotate the "Manual-Electric" control to the "Manual" position, and with the receiver tuned in "Manually" to the desired station a quick check can be made; then, rotate the "Manual-Electric" control knob back to the "Electric" position. **Exact resonance with the desired station should be obtained by observing the tuning indicator.** When this adjustment has properly been made, the screw of the antenna tuning adjustment designated 1560 to 1000 kilocycles should be rotated to the position where maximum indication is again obtained on the tuning indicator tube. When these adjustments have been properly made the station having the highest frequency is correctly set-up for Electric Tuning by means of the push button.

11. Now proceed to set-up the remaining five stations in the same manner as mentioned in Pargraphs, 9 and 10 above, proceeding according to the frequency of the remaining stations.

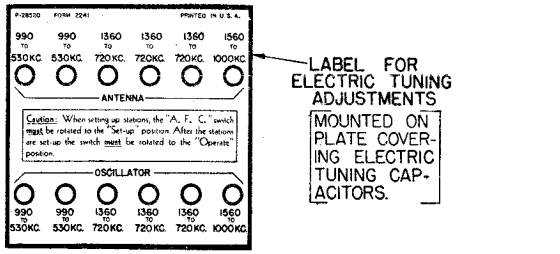

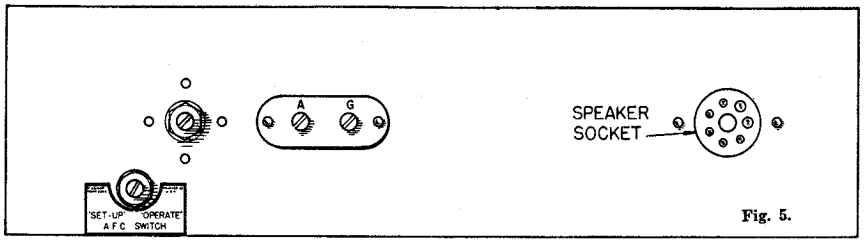

Fig. 5.

12. IMPORTANT: When all of the adjustments have properly been made for the six desired stations, the slotted shaft of the "A. F. C." switch, located on the rear of the chassis base, should be rotated so that the slotted shaft points in the direction of the word, "Operate" (maximum counter-clockwise rotation). With the electric tuning system in operation, the receiver will be automatically kept in tune with any one of the six favorite stations as long as the station is operating or provided it has no unusual fading characteristics. If a distant station which is very weak is set up in the electric tuning unit, it will be found that the automatic frequency control circut will not hold this station if a strong signal is present in either adjacent channel. This same phenomenon will occur if two stations in adjacent channels are almost of equal signal strength with the weakest signal fading slightly; with this condition the strong signal will have a tendency to "pull in" when the receiver is tuned to the station which is slightly weaker and fading.

13. The tuning indicator unit should now be replaced in its proper operating position. Before placing this unit in its proper location, make sure that the tuning indicator tube is fully inserted into its accompanying socket.

REPLACEMENT PARTS

Piece Number	Schematic Circuit Designation	Part
18896	R36, R37	Resistor, Type "B", 10,000 Ohms
23517		Socket, 7 Prong
24166	C53	Capacitor, Type "O", 25 Mmfd.
24268		Cord (Power Supply)
24402	C7, C22, C51	Capacitor, .1 Mfd.
24403	C5, C21, C28, C31, C37, C44	Capacitor, .04 Mfd.
24559	C27, C32, C33	Capacitor, Type "O", 100 Mmfd.
24560	C8, C54	Capacitor, Type "O", 50 Mmfd.
24994	C24	Capacitor, .06 Mfd.
25149	C34	Capacitor, .01 Mfd.
25459	C52	Electrolytic Capacitor, 4 Mfd., 250 Volts
25497	C9, C35	Capacitor, Type "W", .001 Mfd.
25500	R31	Resistor, Flexible, 400 Ohms
25533	C36	Capacitor, .01 Mfd.
25539		Socket, 8 Prong
25814	L27	R. F. Choke Coil
26287		Pilot Lamp
26322	R33	Resistor, Type "E", 120 Ohms
26326	R2, R18	Resistor, Type "E", 270 Ohms
26328	R8	Resistor, Type "E", 390 Ohms
26330	R7	Resistor, Type "E", 560 Ohms
26333	R4	Resistor, Type "E", 1000 Ohms
26338	R23	Resistor, Type "E", 2700 Ohms
26349	R25, R32	Resistor, Type "E", 22,000 Ohms
26353	R3, R13	Resistor, Type "E", 47,000 Ohms
26357	R1, R24	Resistor, Type "E", .1 Megohm
26362	R14, R15, R29	Resistor, Type "E", .27 Megohm
26365	R5, R11, R12, R19	Resistor, Type "E", .47 Megohm
26369	R6, R10, R16, R22, R34	Resistor, Type "E", 1 Megohm
26373	R9	Resistor, Type "E", 2.2 Megohms
26497		Tuning Indicator Cable Assembly
26564	C10, C11	Capacitor Assembly, L. F. Aligners ("A" and "R" Ranges)
26776	R31	Resistor, Type "F", 12,000 Ohms
26944	C12	Capacitor, Type "W", .004 Mfd.
27067	L22, L25, L24, L25	Power Transformer (50 to 60 Cycles Chassis)
27068	L22, L23, L24, L25	Power Transformer (25 to 60 Cycles Chassis)
27069	L14, L15	1st I. F. Transformer
27073	C19, C20, C25, C26	Capacitor, Fixed Tuning, 100 Mmfd.
27081	C1	Tuning Capacitor, Wave Trap
27098	C40, C41	Capacitor Assembly, 1—.002 Mfd.;1—.005 Mfd. (Signal Admission Control)
27101	C42	Capacitor, Type "O", 200 Mmfd.
27102		Pulley Assembly, Gang Tuning Capacitor
27107		Dial (Tuning)
27108	C18, C33, C45, C46	Capacitor Assembly (2—.05 Mfd.)
27112		Dial Indicator Frame
27122	C39	Electrolytic Capacitor, 25 Mfd., 400 Volts
27123	C38	Electrolytic Capacitor, 16 Mfd., 300 Volts
27124	C13, C35	Electrolytic Capacitor Assembly, 4 Mfd., 250 Volts; 12 Mfd., 20 Volts
27125	R23	Resistor, Type "F", 25,000 Ohms
27132	L18, L19	Transformer Assembly, Audio Output
27137		Range Switch
27143	C2, C3, C4, C14, C15, C16	H. F. Aligners for Antenna and Oscillator Transformers
27144	L2, L3, L4, L5, L6, L7	Coil Assembly, Antenna Transformers
27145	L8, L9, L10, L11, L12, L13	Coil Assembly, Oscillator Transformers
27149	L1	Wave Trap Coil
27159		Belt (Tuning Drive)
27311	R20	"Off-On" Switch and Tone Control
27396		Thumb Screw
27416		Switch (Signal Admission Control)
27538	C48	Capacitor, Type "W", .005 Mfd.
27595	C43	Electrolytic Capacitor, 16 Mfd., 250 Volts
27610	R35	Volume Control
27612	L16, L17, L26	2nd I. F.—Discriminator Transformer
27615	R17	Resistor, Type "EI", 27,000 Ohms
27685	C47	Dry Electrolytic Capacitor, 12 Mfd., 25 Volts
27782	C30	Capacitor, .03 Mfd.
28170	R30	Resistor, Type "EB", 10,000 Ohms
28492		Adjustable Capacitors and Switches Assembly for Electric Tuning
28521		Electric Tuning Cable Assembly
28523		Electric Tuning Cable Assembly
28550	L29	Oscillator Coil for Electric Tuning
28551	L28	Antenna Coil for Electric Tuning
28572		Drive Assembly
28616		A. F. C. Switch
28653		Shuttle Switch for Manual Electric Tuning Capacitors
28684	C6, C17	Gang Tuning Capacitors
28699		Pilot Lamp Socket Assembly for Tuning Dial
28700		Pilot Lamp Socket Assembly for Station Call Letters
28702		Lever Assembly for Manual-Electric Control Switch
28704		Drive Rod for Manual-Electric Control Switch
28705		Button for Manual-Electric Control Switch
28711		Cam and Bracket Assembly for Manual-Electric Control Switch
28729		Spring for Manual-Electric Control Switch

MISCELLANEOUS PARTS

27800	Knob Assembly (Used on both "Volume" and "Off-On-Tone" Controls)
27802	Knob Assembly (For "Rapid Stations Selector" Shaft)
27803	Knob Assembly (For "Vernier Stations Selector" Shaft)
27804	Knob Assembly (For "Range" Switch Shaft)
27628	Felt Washer (Used on both "Volume" and "Off-On-Tone" Controls Shafts)
27629	Felt Washer (For Range Switch Shaft)
27630	Felt Washer (For "Rapid Stations Selector" Shaft)
28504	Knobs (For Stations' Selectors of Electric Tuning)
28603	Knob (For "Manual-Electric" Control)

MODEL 229P Series
Chassis Wiring
Specifications

STROMBERG-CARLSON TEL. MFG. CO.

ELECTRICAL SPECIFICATIONS

Type of Circuit	Superheterodyne
Tuning Ranges	A—540 to 1500 Kc.; B—1450 to 3500 Kc.; C—5600 to 18,000 Kc.
Number and Types of Tubes	2 No. 6K7, 1 No. 6A8, 1 No. 6H6, 1 No. 6F5, 1 No. 6F6, 1 No. 80, 1 No. 6G5
Power Supply Voltage	105 to 125 Volts
Power Supply Frequency	See Receivers Listed under "Apparatus Specifications"
Input Power Rating	90 Watts
Frequency of Intermediate Amplifier	465 Kilocycles

APPARATUS SPECIFICATIONS

No. 229-P	60 Cycles Only; P-27936 Chassis; P-27834 Loud Speaker; P-27835 Phonograph Unit
No. 229-PB	25 Cycles Only; P-27937 Chassis; P-27834 Loud Speaker; P-27836 Phonograph Unit
No. 229-PD	50 Cycles Only; P-27936 Chassis; P-27834 Loud Speaker; P-27837 Phonograph Unit
No. 229-PE	40 Cycles Only; P-27937 Chassis; P-27834 Loud Speaker; P-27838 Phonograph Unit

FOR OTHER DATA SEE INDEX

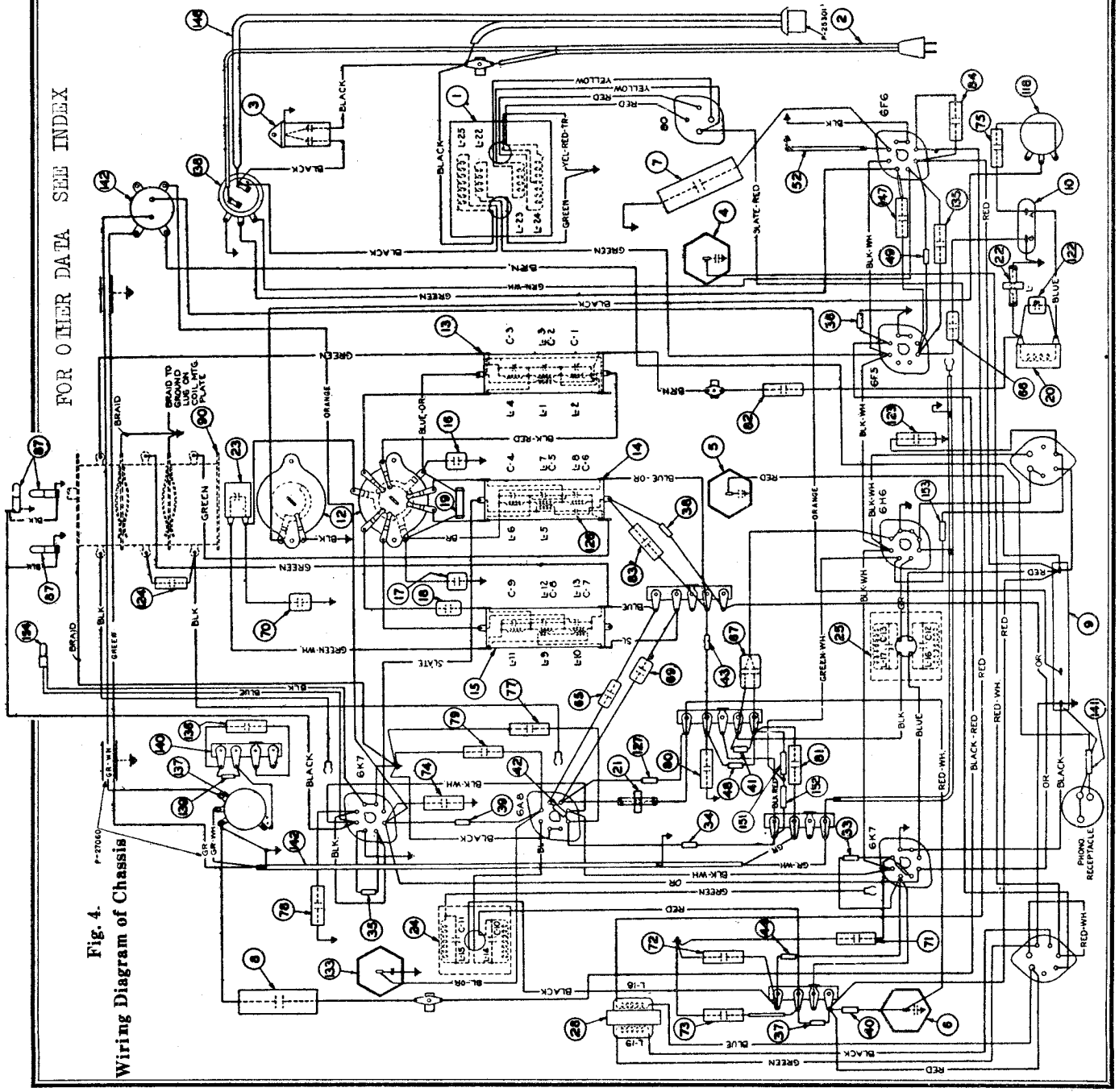

Fig. 4. Wiring Diagram of Chassis

©John F. Rider, Publisher

STROMBERG-CARLSON TEL. MFG. CO.

MODELS 240H,-HB,-L,
-LB,-M,-MB,-R,-RB,
S,-SB,-W,-WB,-P,-PB
Schematic,Specs.
Circuit Data

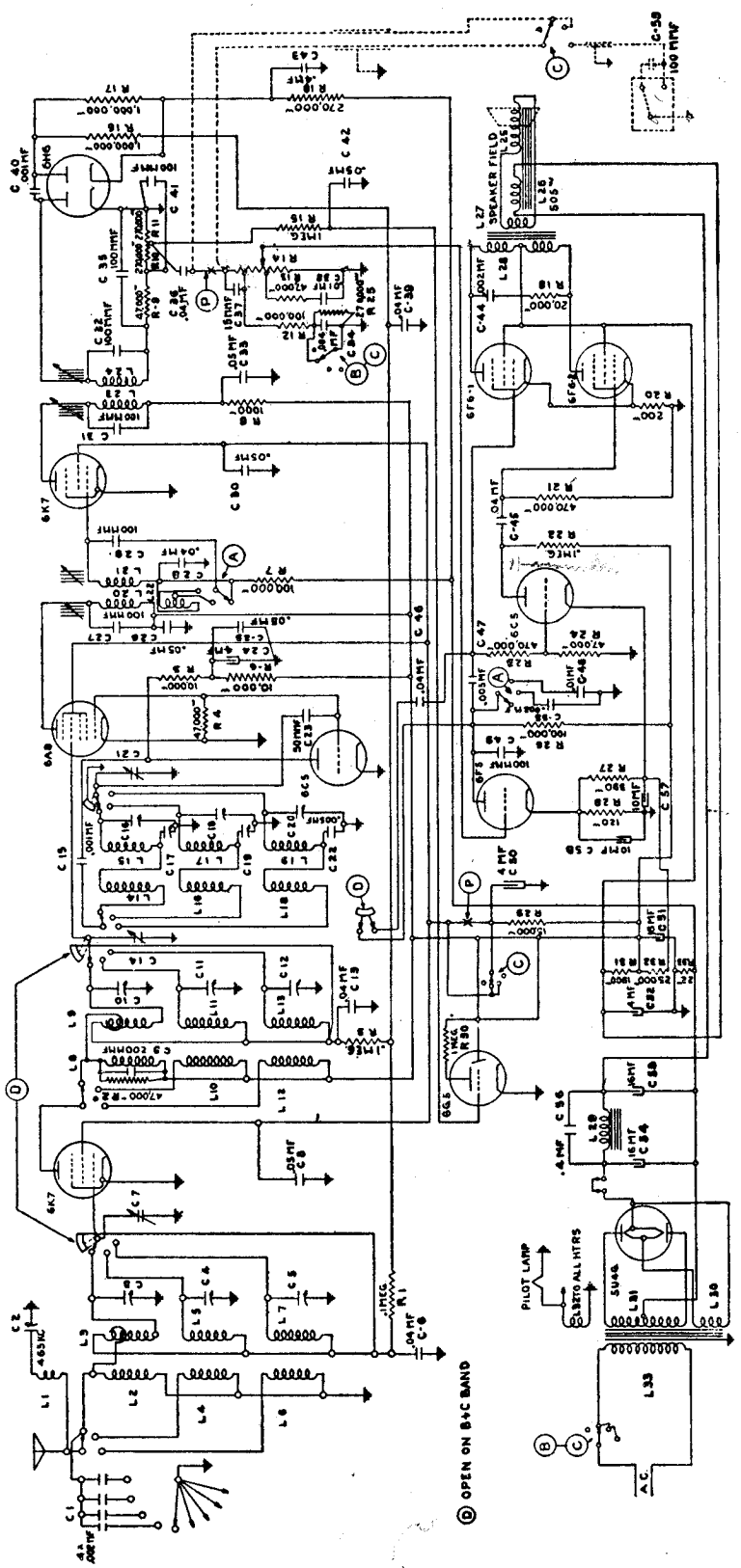

Fig. 3. Schematic Circuit of Receiver.

Tuning Ranges ---------- A—530 to 1700 Kc.; B—1700 to 5600 Kc.; C—5600 to 18,000 Kc.
No. and Type of Tubes ---------- 2 No. 6K7, 1 No. 6A8, 2 No. 6C5, 1 No. 6H6, 1 No. 6F5, 2 No. 6F6, 1 No. 6G5, 1 No. 5U4G
Voltage Rating ---------- 105 to 125 Volts, A. C.
Power Frequency Rating ---------- 25 to 60 Cycles and 50 to 60 Cycles
Input Power Rating:
Radio Models Only ---------- 132 Watts
Radio-Phono. Models ---------- 165 Watts
Frequency of Intermediate Amplifier ---------- 465 Kilocycles

The No. 240 Receivers are eleven tube "Adjustable High Fidelity" receivers employing metal tubes. These receivers have three tuning ranges, the frequency limits of each range being listed under the "Electrical Specifications." In order to obtain maximum performance on the Standard Broadcast Range ("A" Range) of these receivers, a "signal admission control switch" is provided. This control is located on the inside rear flange of the chassis base, and has a slotted shaft which protrudes through the base so that it may be adjusted by the use of a screwdriver. When either the "B" or "C" ranges are in operation, this "signal admission control" is automatically cut out of the circuit, allowing the receiver to function at its maximum sensitivity on these two ranges. When operating in the Standard Broadcast Range, maximum sensitivity is obtained when the slotted shaft of this control is rotated to its maximum counter-clockwise position. To properly set this control, place the receiver in operation and then adjust this control so that clearest reception is obtained. The control should remain in this position. Do not readjust this control for each frequency. The above adjustment should be made in the evening if best results are to be obtained.

©John F. Rider, Publisher

MODEL 240 Series
Chassis Wiring

STROMBERG-CARLSON TEL. MFG. CO.

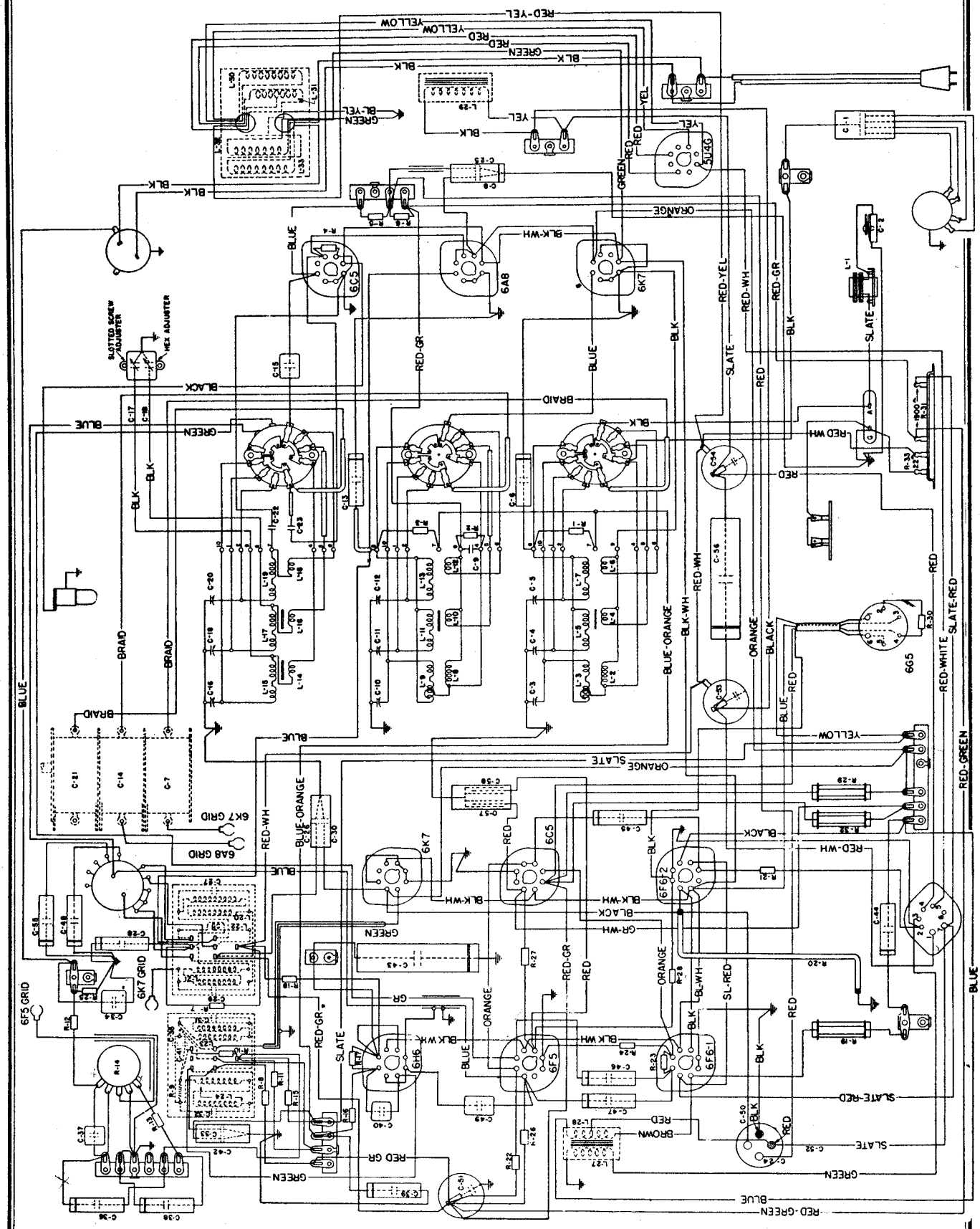

Fig. 4. Wiring Diagram, No. 240 Receiver

©John F. Rider, Publisher

MODEL 240 Series

STROMBERG-CARLSON TEL. MFG. CO. Chassis Views, Specs

NORMAL VOLTAGE READINGS

The various values of voltages listed in the following table are obtained by measuring between the various tube socket contacts and the chassis base, with the tubes in their respective sockets. The receiver is, therefore, in operation when the measurements are made. Figure 1, shows the terminal layout of the sockets with the proper terminal numbers.

Voltages are given for a line voltage of 120 volts, and allowance should be made for differences when the line voltage is higher or lower. A meter having a resistance of 1000 ohms per volt should be used for measuring the D. C. voltages. Voltage values shown are those obtained on the lowest possible scale of a meter having the following ranges: O-2.5, O-10, O-100, O-250, O-500, O-1000 volts except when an asterisk appears after any given voltage value in which case the 250 volt scale was used.

			Terminals of Sockets								*Heater Voltages Between Heater Terminals*	
Tube	*Circuit*	*Cap*	1	2	3	4	5	6	7	8	*Socket Terminal Numbers*	*Volts*
6K7	R. F. Amp.	0	0	0	+230	+95	0	—	*6.1*	0	2–7	*6.1*
6A8	Modulator	0	0	0	+235	+95	—17	+95	*6.1*	0	2–7	*6.1*
6C5	Oscillator	—	0	0	+130	—	—17	0	*6.1*	0	2–7	*6.1*
6K7	I. F. Amp.	0	0	0	+225	+95	0	—	*6.1*	0	2–7	*6.1*
6H6	Dem.—A. V. C.	—	0	0	0	0	0	0	*6.1*	0	2–7	*6.1*
6F5	Audio Amp.	0	0	0	—	+125	+115	+125	*6.1*	+1.2	2–7	*6.1*
6C5	Audio Amp.	—	0	0	+115	+115	0	+230	*6.1*	+5.2	2–7	*6.1*
1st 6F6	Audio Output	—	0	0	+295	+300	0	0	*6.1*	+20	2–7	*6.1*
2nd 6F6	Audio Output	—	0	0	+290	+300	0	0	*6.1*	+20	2–7	*6.1*
6G5	Tuning Ind.	—	*6.1*	+2*	0	+225	0	0			1–6	*6.1*
5U4G	Rectifier	—	—	+420	—	*380*	—	*380*	—	+417	2–8	*4.8*
Speaker Socket		—	+410	0	0	+420	+420	—	+300			

A. C. voltages are indicated by italics. Receiver tuned to 1000 Kc., no signal.

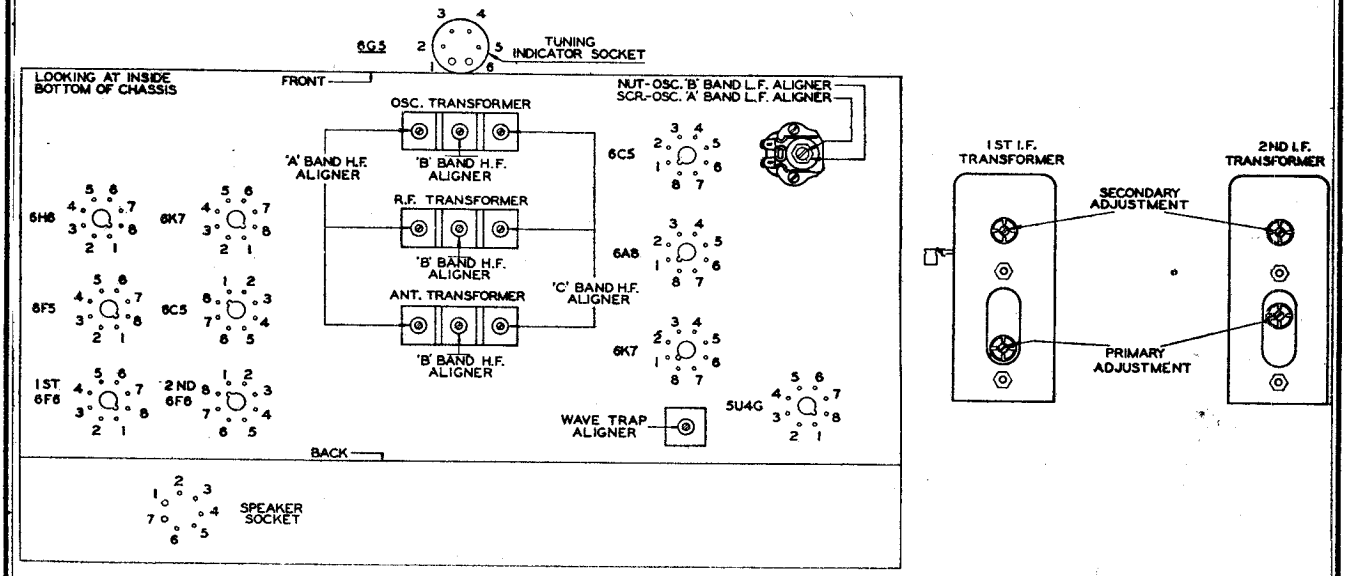

Fig. 1. Terminal Layout for Voltage Measurement Chart and Location of the Various Aligning Capacitors.

©John F. Rider, Publisher

MODEL 240 Series

Alignment, Trimmers

STROMBERG-CARLSON TEL. MFG. CO.

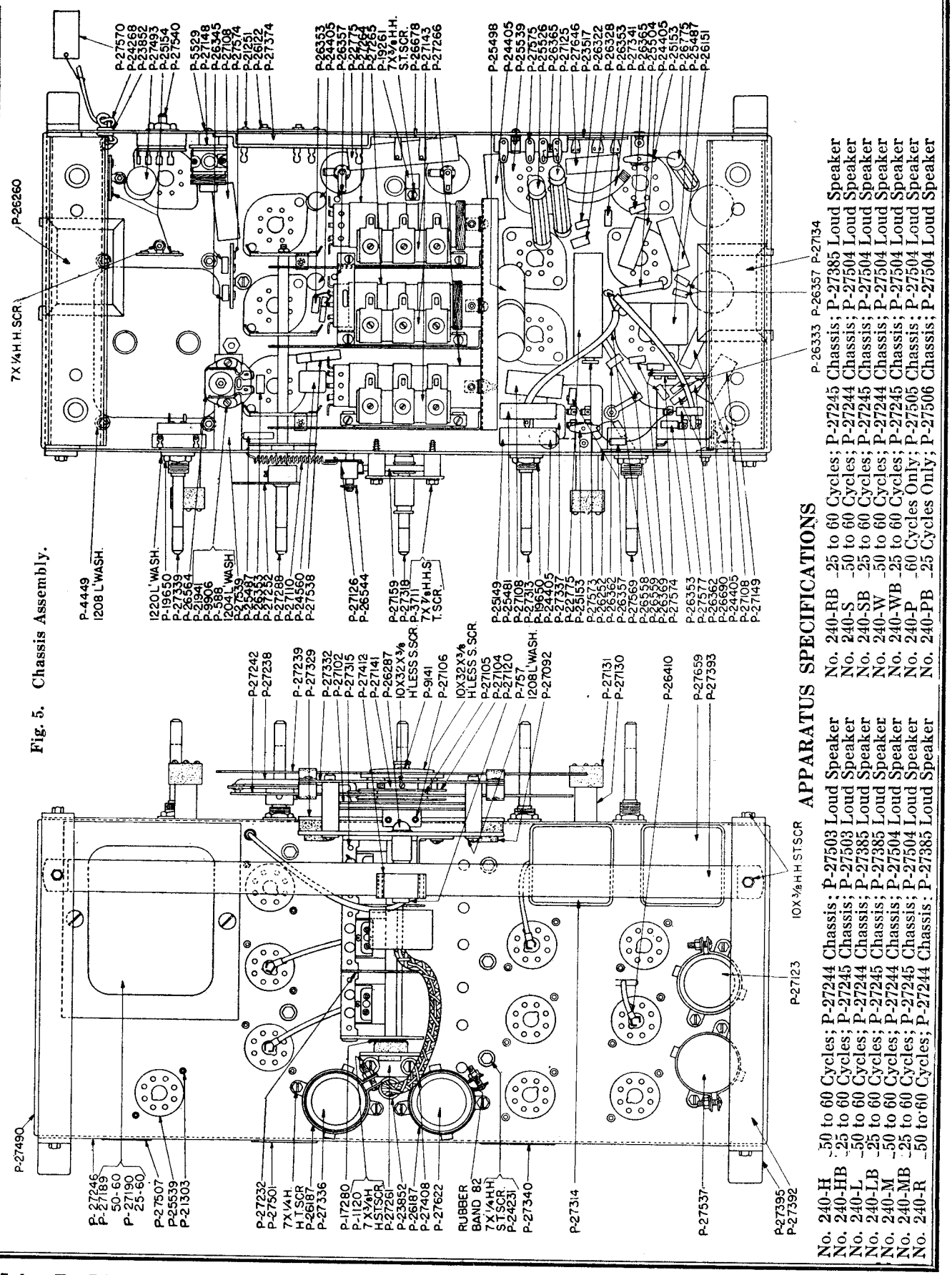

Fig. 5. Chassis Assembly.

APPARATUS SPECIFICATIONS

No. 240-H	-50 to 60 Cycles;	P-27244 Chassis;	P-27503 Loud Speaker
No. 240-HB	-25 to 60 Cycles;	P-27245 Chassis;	P-27503 Loud Speaker
No. 240-L	-50 to 60 Cycles;	P-27244 Chassis;	P-27385 Loud Speaker
No. 240-LB	-25 to 60 Cycles;	P-27245 Chassis;	P-27385 Loud Speaker
No. 240-M	-50 to 60 Cycles;	P-27244 Chassis;	P-27504 Loud Speaker
No. 240-MB	-25 to 60 Cycles;	P-27245 Chassis;	P-27504 Loud Speaker
No. 240-R	-50 to 60 Cycles;	P-27244 Chassis;	P-27385 Loud Speaker

No. 240-RB	-25 to 60 Cycles;	P-27245 Chassis;	P-27385 Loud Speaker
No. 240-S	-50 to 60 Cycles;	P-27244 Chassis;	P-27504 Loud Speaker
No. 240-SB	-25 to 60 Cycles;	P-27245 Chassis;	P-27504 Loud Speaker
No. 240-W	-50 to 60 Cycles;	P-27244 Chassis;	P-27504 Loud Speaker
No. 240-WB	-25 to 60 Cycles;	P-27245 Chassis;	P-27504 Loud Speaker
No. 240-P	-60 Cycles Only;	P-27505 Chassis;	P-27504 Loud Speaker
No. 240-PB	-25 Cycles Only;	P-27506 Chassis;	P-27504 Loud Speaker

©John F. Rider, Publisher

©John F. Rider, Publisher

When reception conditions warrant, the fidelity of this receiver can be increased by rotating the "Tone-Fidelity" switch control knob in a clockwise rotation from the normal position of this control. High Fidelity reproduction is obtained in two steps from the normal position of this control. These receivers are also provided with a low level bass frequency compensating circuit in conjunction with the volume control circuit, so that balanced reproduction is obtained for any setting of the volume control.

A metal guard frame is furnished on these receivers to prevent damage to the chassis components and also to facilitate ease of servicing should this become necessary. Do not turn the chassis over on its guard frame without first removing the tuning indicator unit which is secured to the metal guard frame. To remove the tuning indicator unit from the guard frame, first unscrew the knurled screw which holds the tuning indicator's clamp to the metal guard frame, which will then allow the tuning indicator unit to be removed from the guard frame.

ALIGNMENT DATA

All alignment adjustments are accurately made at the factory on these receivers, and ordinarily no readjustments are necessary. However, should it become necessary to make any readjustments, the alignment procedure given in the following paragraphs should be carefully followed. In order to make these aligning adjustments in an easy and satisfactory manner, it is recommended that the Stromberg-Carlson P-27657 and P-27658 aligning tools be used.

To accurately align the circuits in these receivers, it is necessary to use a high grade, modulated test oscillator (Signal Generator), the output voltage of which can be varied. In conjunction with this test oscillator, a sensitive output meter should be used for determining the maximum signal voltage developed across the voice coil of the loud speaker.

In making any alignment adjustments, always adjust the test oscillator's output voltage to the minimum value where a good alignment may still be obtained. Never attempt to make any alignment adjustments using a strong signal. Before proceeding with the alignment of any circuits in these receivers be sure that the "Signal Admission Control" is set for the maximum sensitivity position and that the "Fidelity" control knob is set for the "normal" position. The "Off-On-Bass" control knob should also be set for the normal position. Figure 1 shows the location of all the aligning capacitors or adjustments for this receiver.

It will not be necessary to remove the chassis in these receivers from their cabinets in order to make any alignment adjustments. The alignment adjustments for the intermediate frequency circuits are accessible from the rear of the receiver, and the adjustments for the radio frequency circuits are accessible through the apertures located in the bottom metal base plate of the chassis; these apertures are easily accessible either through the bottom of the cabinet or through the bottom of the cabinet shelf, depending upon the particular style of cabinet. See Figure 2. Never align any of these receivers without having the metal base plate fastened to the chassis base.

Dial Adjustment

Before aligning the circuits of these receivers, the tuning dial must be properly aligned to "track" with the gang tuning capacitor. To check whether the dial is set correctly with respect to the gang tuning capacitor, rotate the "Rapid Station Selector" knob in a clockwise direction so that the gang tuning capacitor is set to its maximum capacity position. Then, with the receiver turned "on", the illuminated dial indicator line should be exactly centered over the dial alignment lines (black lines) which are located at the extreme low frequency end of each scale on the dial. If these lines do not center over the illuminated dial indicator line, loosen the two set screws located on the hub of the dial. Then, rotate the dial so that these alignment lines are centered over the illuminated dial indicator line. The two set screws of the dial hub should then be securely tightened.

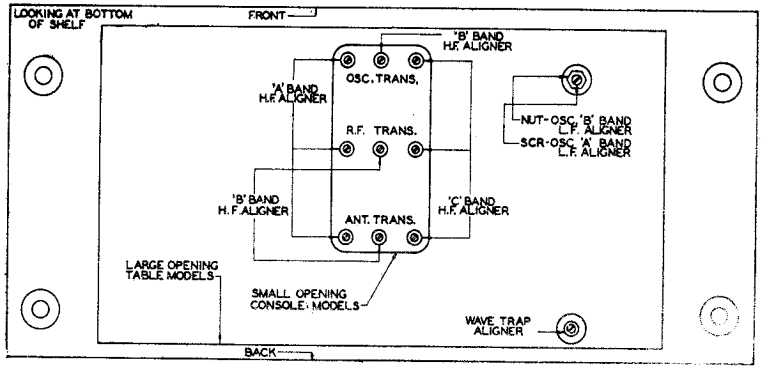

Fig. 2. View Through Chassis Mounting Shelf Showing Adjusting Screws for R. F, Aligning Capacitors.

Intermediate Frequency Adjustments

The intermediate frequency used in these receivers is 465 kilocycles. Because of the necessity of obtaining the proper shape of resonance curve of these stages in a high fidelity receiver, it is recommended that unless it is absolutely essential, these I. F. adjustments be untouched. In the factory these adjustments are made using a visual system which allows the operator to see the exact shape of the resonance curve. For this reason it is best to have these adjustments made at the factory. However, in the case where this cannot be done, the following procedure should be followed.

1. Operate the Range Switch of the receiver to the "A" range position and set the tuning dial to its extreme low frequency position. Set the "Fidelity" control knob to its "Normal" position, and the "Off-On-Bass" control knob to its normal position. **Never attempt to align the I. F. circuits of this receiver with the "Fidelity" control set at any position other than the "Normal" fidelity position.** Rotate the Volume Control knob to its maximum clockwise position (maximum volume).
2. Apply between the chassis base (or ground binding post) of the receiver and the grid of the No. 6A8 modulator tube, a modulated signal of 465 kilocycles from the test oscillator, using a 0.1 microfarad capacitor in series with the connection between the output terminal of the test oscillator and the grid of the No. 6A8 tube. Do not remove the chassis grid lead connecting to this tube. The ground (or low side) terminal of the test cillator should be connected to either the chassis base or the ground binding post terminal.
3. Now, noting from Figure 1 the aligning adjustments for the first and second I. F. transformers, align the I. F. circuits in the following manner:
   Secondary of second I. F. transformer.
   Primary of second I. F. transformer.
   Secondary of first I. F. transformer.
   Primary of first I. F. transformer.
   Adjusting the circuits to obtain maximum reading on the output meter, reducing the output of the test oscillator as required.

Radio Frequency Adjustments

The alignment of the radio frequency circuits of the various ranges in these receivers should be very carefully made and in the order specified.

Alignment of Short Wave Range (Also Referred to as "C" Band)

In aligning the radio frequency circuits for this range, replace the 0.1-microfarad capacitor which was placed in series with the test oscillator's output lead for the I. F. alignments, with a 400-ohm carbon type resistor. This lead should then be connected to the antenna binding post located on the rear of the receiver chassis. The ground terminal (or low side) of the test oscillator should be connected to the ground binding post on the receiver.

1. Operate the Range Switch on the receiver chassis to the "C" range position, and set the test oscillator's frequency and the receiver's tuning dial to 16 megacycles.
2. Adjust the oscillator's "C" band high frequency aligner for maximum output.
3. Adjust the R. F. interstage "C" band high frequency aligner for maximum output and at the same time rotate the gang tuning capacitor back and forth through resonance until maximum output is obtained.
4. Adjust the antenna's "C" band high frequency aligner for maximum output, at the same time rotate the gang tuning capacitor back and forth through resonance until maximum output is obtained.

Alignment of Aircraft, Amateur, and Police Range (Also Referred to as "B" Band)

In aligning the radio frequency circuits for this range, use the same artificial antenna (400-ohm carbon type resistor) in series with the output terminal of the test oscillator as was used for aligning the short-wave range.

1. Operate the Range Switch on the receiver chassis to the "B" range position, and set the test oscillator's frequency and the receiver's tuning dial to 5 megacycles.
2. Adjust the oscillator's "B" band high frequency aligner for maximum output.
3. Adjust the R. F. interstage "B" band high frequency aligner for maximum output and at the same time rotate the gang tuning capacitor back and forth through resonance until maximum output is obtained.
4. Adjust the antenna's "B" band high frequency aligner for maximum output, and at the same time rotate the gang tuning capacitor back and forth through resonance until maximum output is obtained.
5. Set the test oscillator's frequency and the receiver's tuning dial to 1.8 megacycles.
6. Adjust the oscillator's "B" band low frequency aligner (series aligner), and at the same time rotate the gang tuning capacitor back and forth through resonance until maximum output is obtained.
7. Reset both the test oscillator's frequency and the receiver's tuning dial to 5 megacycles and repeat operations Nos. 2, 3 and 4.

Alignment of Standard Broadcast Range (Also Referred to as "A" Band)

In aligning the radio frequency circuits for this range, replace the 400-ohm carbon type resistor in series with the test oscillator's output lead with a 200-micro-microfarad capacitor and align these circuits as follows:

1. Operate the Range Switch to the "A" range position and set the test oscillator's frequency and the receiver's tuning dial to 1.5 megacycles.
2. Adjust the oscillator's "A" band high frequency aligner for maximum output.
3. Adjust the R. F. interstage "A" band high frequency aligner for maximum output.
4. Adjust the antenna's "A" band high frequency aligner for maximum output.
5. Set the test oscillator's frequency and the receiver's tuning dial to 0.6 megacycles.
6. Adjust the oscillator's "A" band low frequency aligner (series aligner) for maximum output, and at the same time rotate the gang tuning capacitor slightly back and forth through resonance until maximum output is obtained.
7. Reset both the test oscillator's frequency and receiver's tuning dial to 1.5 megacycles and repeat operations Nos. 2, 3 and 4.

Wave Trap Adjustment

In adjusting the wave trap circuit, the "Signal Admission Control" should be set for the most sensitive position (shaft rotated in the most counter-clockwise direction). Set the Range Switch of the receiver to the "A" range position and the tuning dial to 1000 kilocycles. Connect a 200-micro-microfarad capacitor in series with the output terminal of the modulated test oscillator and the antenna binding post on the receiver, and the ground terminal of the test oscillator to the ground binding post on the receiver. Then, with the modulated test oscillator set at the frequency of the intermediate amplifier, 465 kilocycles, supply a fairly strong signal to the receiver and adjust the wave trap aligner until a minimum indication is obtained on the output meter.

MODEL 240 Series
Voltage, Socket
Trimmers

STROMBERG-CARLSON TEL. MFG. CO.

REPLACEMENT PARTS

Piece Number	Schematic Circuit Designation	Part
22775	C43, C56	Capacitor, .4 Mfd.
23517		Tube Socket, 7 Prong
24268		Cord, Power Supply
24405	C6, C13, C28, C36, C39, C45, C46	Capacitor, .04 Mfd.
24560	C23	Capacitor, Type "O", 50 Mmfd.
25149	C38, C48	Capacitor, .01 Mfd.
24559	C35, C41	Capacitor, Type "O", 100 Mmfd.
25481	C55	Capacitor, .002 Mfd.
25487	C15, C40	Capacitor, Type "W", .001 Mfd.
25498	C57, C58	Electrolytic Capacitor, 10 Mfd., 25 Volts, and 10 Mfd., 25 Volts
25504	C49, C59	Capacitor, Type "2", 100 Mmfd.
25526	R29	Resistor, Type "F", 15,000 Ohms
25539		Tube Socket, 8 Prong
26151	C47	Capacitor, .005 Mfd.
26260	L29	Choke Assembly
26287		Pilot Lamp
26322	R28	Resistor, Type "E", 120 Ohms
26328	R27	Resistor, Type "E", 390 Ohms
26333	R8	Resistor, Type "E", 1000 Ohms
26345	R5, R6	Resistor, Type "E", 10,000 Ohms
26353	R2, R4, R9, R13, R24	Resistor, Type "E", 47,000 Ohms
26357	R1, R3, R7, R12, R22, R26	Resistor, Type "E", .1 Megohm
26362	R10, R11, R18, R25	Resistor, Type "E", .27 Megohm
26365	R21, R23	Resistor, Type "E", .47 Megohm
26369	R15, R16, R17, R30	Resistor, Type "E", 1 Megohm
26564	C17, C19	Capacitor, Oscillator Low Frequency Aligners
26678		Socket, Phono-Jack
26775	R19	Resistor, Type "F", 20,000 Ohms
27081	C2	Capacitor, Aligning
27101	C9	Capacitor, Type "O", 200 Mmfd.
27102		Pulley Assembly
27108	C8, C25, C26, C30, C33, C42	Capacitor, Two, .05 Mfd., 400 Volts
27110		Spring
27120		Pilot Lamp Socket Assembly
27123	C51	Electrolytic Capacitor, 16 Mfd., 300 Volts
27125	R32	Resistor, Type "F", 25,000 Ohms
27126		Strap Assembly
27134	L27, L28	Output Transformer
27141		Dial Hub Plate
27143	C3, C4, C5, C10, C11, C12, C16, C18, C20	H. F. Aligners for Antenna, R. F. and Oscillator Transformers
27148	L1	Coil Assembly, Wave Trap
27159		Belt
27189	L30, L31, L32, L33	Power Transformer (50 to 60 Cycles Chassis)
27190	L30, L31, L32, L33	Power Transformer (25 to 60 Cycles Chassis)
27196		Range Switch Assembly
27232	C7, C14, C21	Gang Tuning Capacitors
27236		Mask Assembly (Selectorlite Dial)
27237		Arm Assembly (Mask Actuator)
27238		Rod, Mask (Actuator)
27239		Dial (Tuning)
27264	L2, L3, L4, L5, L6, L7	Coil Assembly, Antenna Transformer
27265	L8, L9, L10, L11, L12, L13	Coil, Assembly, R. F. Transformer
27266	L14, L15, L16, L17, L18, L19	Coil Assembly, Oscillator Transformer
27313		Switch for Fidelity Control
27314	L20, L21, L22	First I. F. Transformer
27318		Drive Assembly
27332		Indicator Frame Assembly
27336	C53	Electrolytic Capacitor, 16 Mfd., 500 Volts
27337	C34	Capacitor, Type "W", .004 Mfd.
27339		Switch, "Off-On-Bass" (Used on Radio Models only)
27341	R20	Resistor, Flexible, 200 Ohms
27374	R31, R33	Resistor, "B" Voltage Divider
27408		Cable Assembly
27411		Clamp Assembly, Tuning Indicator
27493	C1	Capacitor Assembly; Four, .002 Mfd.
27537	C24, C50, C52	Electrolytic Capacitor, 4 Mfd., 400 Volts; 4 Mfd., 250 Volts; 4 Mfd., 250 Volts
27540		Switch, Signal Admission Control
27569	R14	Volume Control
27577	C37	Capacitor, Type "O", 15 Mmfd.
27622	C54	Electrolytic Capacitor, 16 Mfd., 500 Volts
27646	C44	Capacitor, .002 Mfd.
27659	L23, L24	Second I. F. Transformer
26751		Switch, "Off-On-Bass-Phono" (Used only on "Radio-Phono" Models)
27947		Cord Assembly (Used only on "Radio-Phono" Models)

MISCELLANEOUS PARTS

Piece Number	Part
27800	Knob Assembly (Used on "Volume", "Range Switch" and "Off-On-Bass" Controls' Shafts)
27801	Knob Assembly (For "Fidelity" Shaft)
27802	Knob Assembly (For "Rapid Station Selector" Control Shaft)
27803	Knob Assembly (For "Vernier Station Selector" Control Shaft)
27628	Felt Washer (Used on "Volume", "Fidelity", "Range Switch" and "Off-On-Bass" Controls' Shafts)
27630	Felt Washer (For "Rapid Station Selector" Control Shaft)

©John F. Rider, Publisher

MODELS 126H,126I

STROMBERG-CARLSON TEL. MFG. CO. Chassis Wiring

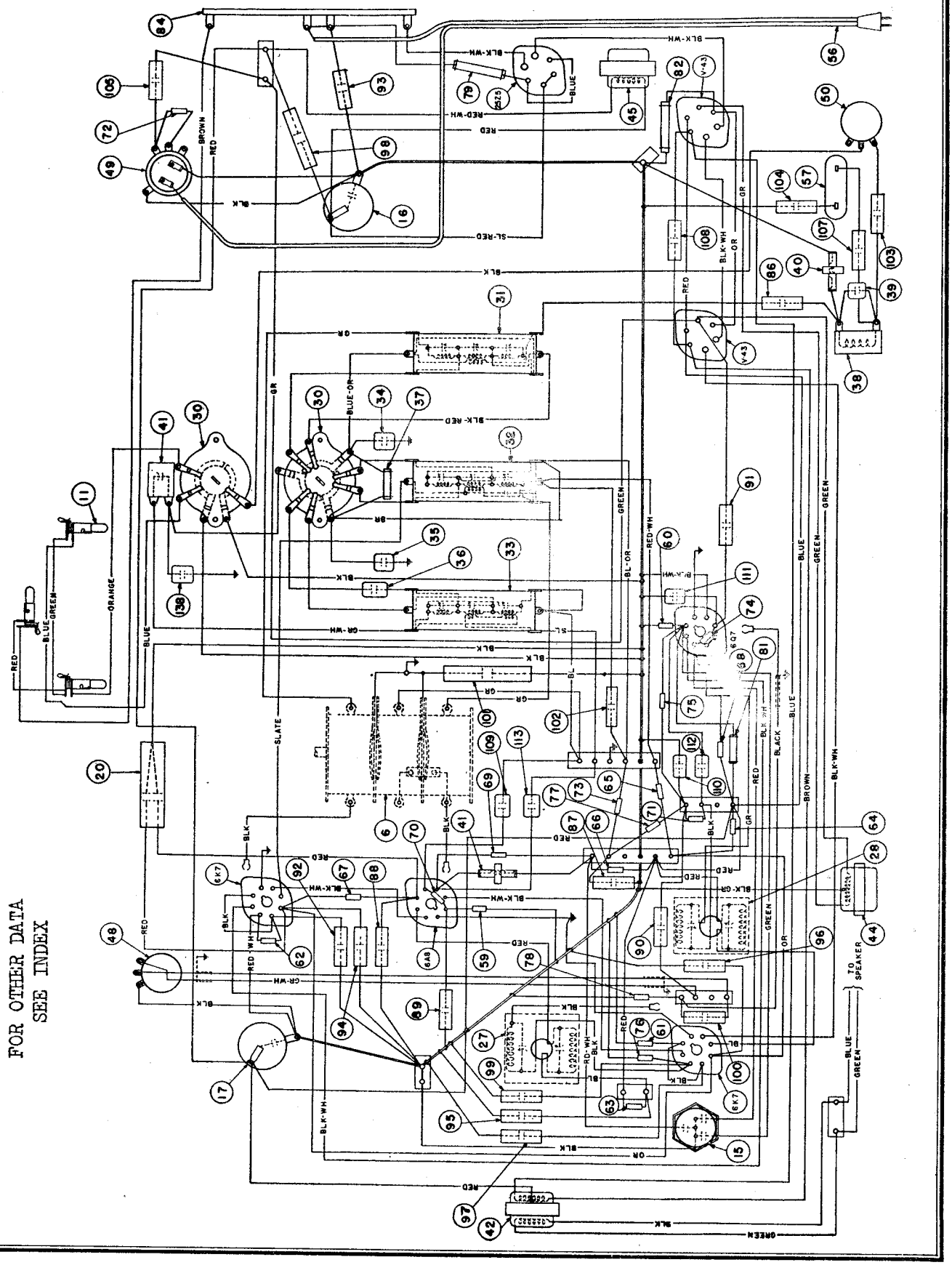

FOR OTHER DATA
SEE INDEX

©John F. Rider, Publisher

MODELS 245L,-LB,
-M,-MB,-R,-RB,
-P,-PB
Schematic,Specs.

STROMBERG-CARLSON TEL. MFG. CO.

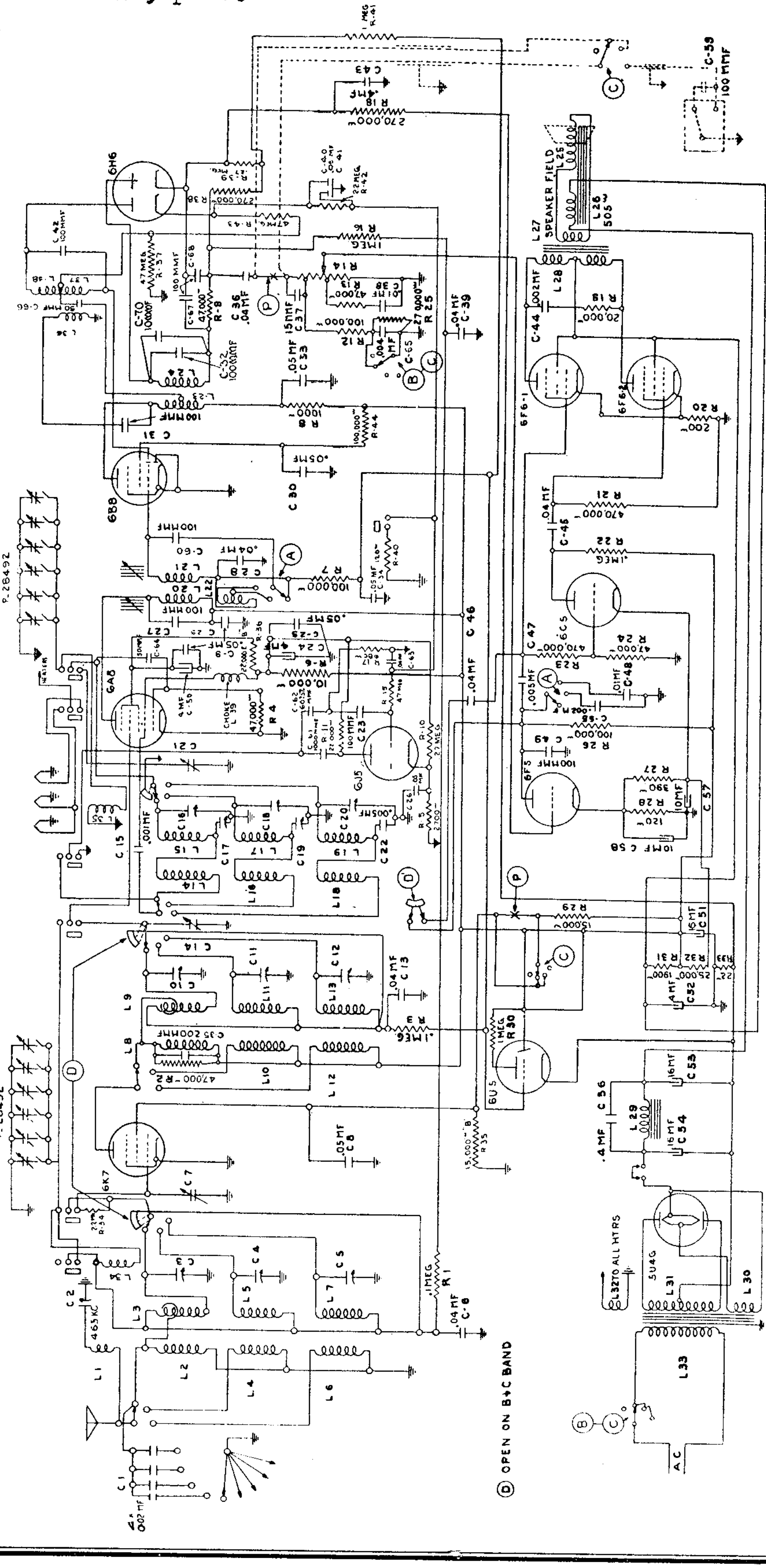

IF PEAK 465 KC

Stromberg-Carlson

No. 245

Radio Receivers

Type of Circuit ---------- Superheterodyne with A. F. C. Electric Tuning
Tuning Ranges ---------- A—530 to 1700 Kc.; B—1700 to 5600 Kc.; C—5600 to 18,000 Kc.
Number and Type of Tubes ---------- {1 No. 6K7, 1 No. 6A8, 1 No. 6J5, 1 No. 6B8, 1 No. 6H6, 1 No. 6F5, 1 No. 6C5, 2 No. 6F6, 1 No. 6U5, 1 No. 5U4G
Voltage Rating ---------- 105 to 125 Volts, A. C.
Power Frequency Rating ---------- 25 to 60 Cycles and 50 to 60 Cycles
Input Power Rating:
Radio Models Only ---------- 130 Watts
Radio-Phono. Models ---------- 165 Watts
Frequency of Intermediate Amplifier ---------- 465 Kilocycles

APPARATUS SPECIFICATIONS

No. 245-L ---------- 50 to 60 Cycles; P-28481 Chassis; P-27385 Loud Speaker
No. 245-LB ---------- 25 to 60 Cycles; P-28482 Chassis; P-27385 Loud Speaker
No. 245-M ---------- 50 to 60 Cycles; P-28481 Chassis; P-27504 Loud Speaker
No. 245-MB ---------- 25 to 60 Cycles; P-28482 Chassis; P-27504 Loud Speaker
No. 245-R ---------- 50 to 60 Cycles; P-28481 Chassis; P-27385 Loud Speaker
No. 245-RB ---------- 25 to 60 Cycles; P-28482 Chassis; P-27385 Loud Speaker
No. 245-P ---------- 60 Cycles Only; P-28590 Chassis; P-27504 Loud Speaker; P-27839 Phono. Motor Unit
No. 245-PB ---------- 25 Cycles Only; P-28591 Chassis; P-27504 Loud Speaker; P-27840 Phono. Motor Unit

©John F. Rider, Publisher

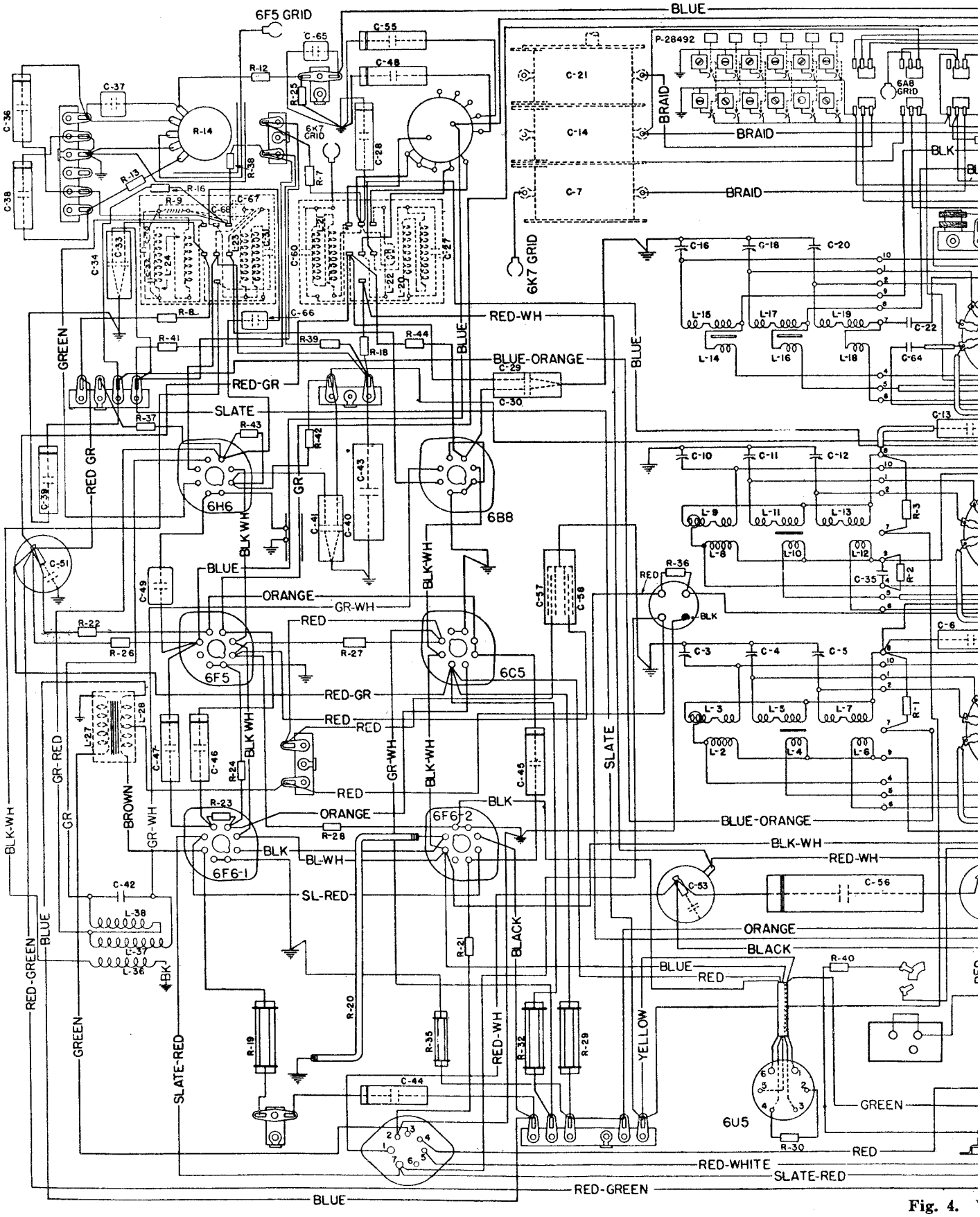

Fig. 4.

©John F. Rider, Publisher

N TEL. MFG. CC.

MODEL 245 Series
Chassis Wiring
Tuner

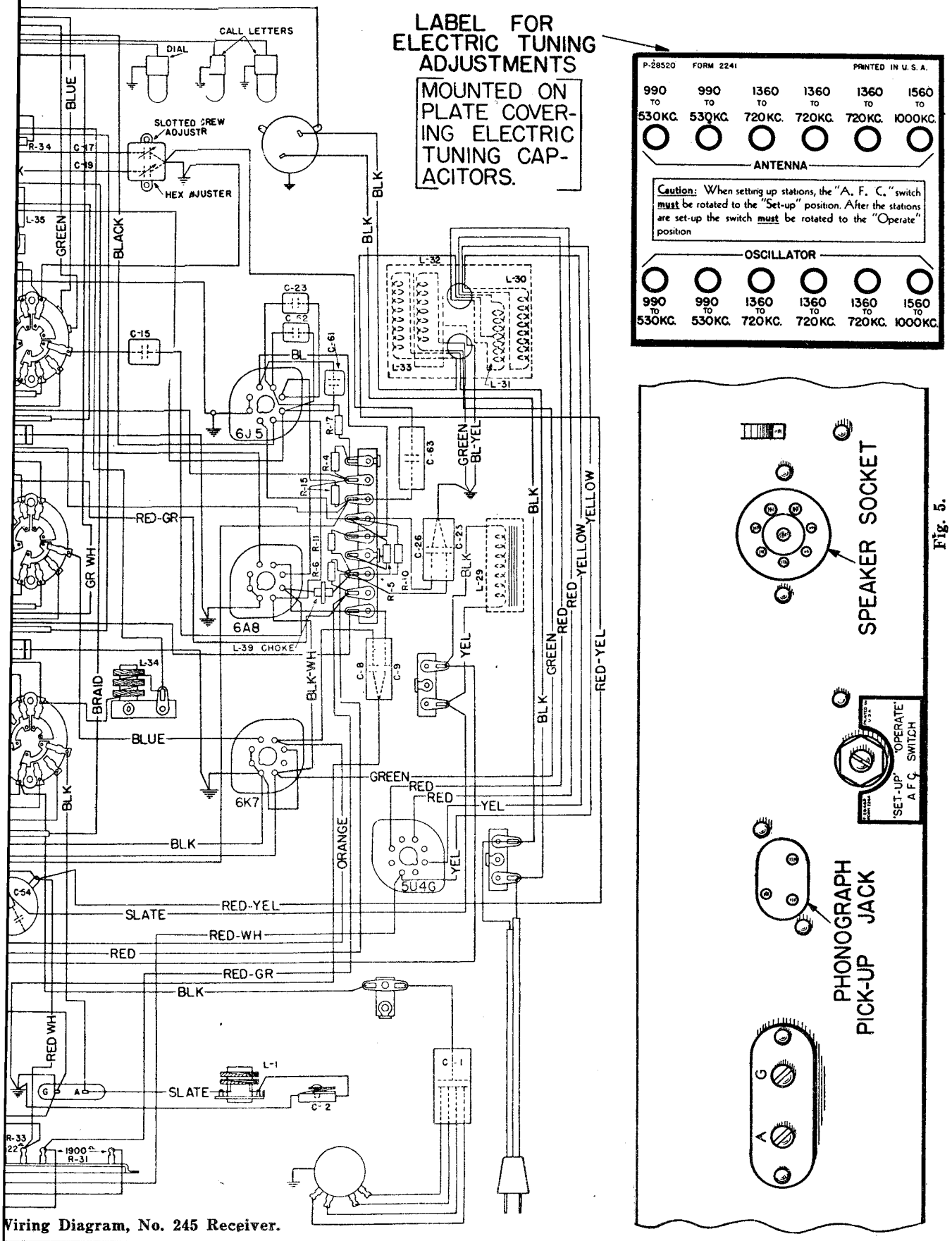

Fig. 5.

Wiring Diagram, No. 245 Receiver.

John F. Rider, Publisher

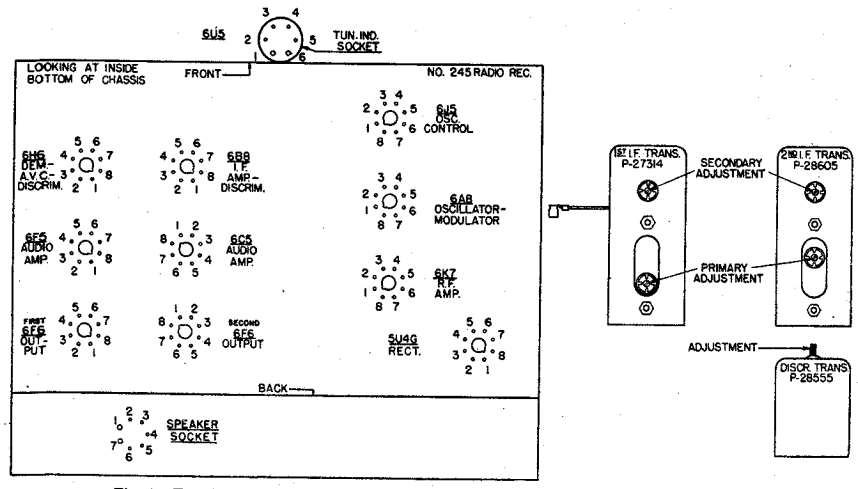

Fig. 1. Terminal Layout for Voltage Measurement Chart and Location of the Aligning Adjustments for the I. F. and Discriminator Circuits.

NORMAL VOLTAGE READINGS

The various values of voltages listed in the following table are obtained by measuring between the various tube socket contacts and the chassis base, with the tubes in their respective sockets. The receiver is, therefore, in operation when the measurements are made. Figure 1, shows the terminal layout of the sockets with the proper terminal numbers.

Voltages are given for a line voltage of 120 volts, and allowance should be made for differences when the line voltage is higher or lower. A meter having a resistance of 1000 ohms per volt should be used for measuring the D. C. voltages. Voltage values shown are those obtained on the lowest possible scale of a meter having the following ranges: 0-2.5, 0-10, 0-100, 0-250, 0-500, 0-1000 volts except when an asterisk appears after any given voltage value, in which case the 250 volt scale was used.

			Terminals of Sockets								*Heater Voltages Between Heater Terminals*	
Tube	*Circuit*	*Cap*	1	2	3	4	5	6	7	8	*Socket Terminal Numbers*	*Volts*
6K7	R. F. Amp.	0	0	0	+225	+107	0	0	*6.1*	0	2-7	*6.1*
6A8	Osc.—Mod.	0	0	0	+225	+107	—10	+130	*6.1*	0	2-7	*6.1*
6J5	Osc. Control	—	0	0	+170	+3.8	0	+225	*6.1*	+3.8	2-7	*6.1*
6B8	I. F. Amp.—Discriminator	0	0	0	+220	0	0	+107	*6.1*	0	2-7	*6.1*
6H6	Discriminator—Dem.—A. V. C.	—	0	0	0	0	0	0	*6.1*	0	2-7	*6.1*
6F5	Audio Amp.	0	0	0	0	+135	+110	+135	*6.1*	+1.3	2-7	*6.1*
6C5	Audio Amp. (Inv.)	—	0	0	+110	+110	0	+220	*6.1*	+5.2	2-7	*6.1*
1st 6F6	Audio Output	—	0	0	+300	+310	0	0	*6.1*	+22	2-7	*6.1*
2nd 6F6	Audio Output	—	0	0	+300	+310	0	0	*6.1*	+22	2-7	*6.1*
6U5	Tuning Indicator	—	*6.1*	+15*	0	+225	0	0	—	—	1-6	*6.1*
5U4G	Rectifier	—	0	+425	0	*390*	0	*390*	0	+425	2-8	*4.8*
Speaker Socket		—	+400	0	0	+425	+425	0	+310	—		

A. C. voltages are indicated by italics. Receiver tuned to 1000 Kc., no signal.

ALIGNMENT DATA

All alignment adjustments are accurately made at the factory on these receivers, and ordinarily no readjustments are necessary. However, should it become necessary to make any readjustments, the procedure given in these instructions should be carefully followed. The preferred method of aligning these receivers is by the use of a suitable cathode ray oscillograph and frequency modulator unit in conjunction with the standard signal generator.

To accurately align circuits in these receivers, it is necessary to use a high grade signal generator capable of being modulated 30% and having an output voltage of at least 100,000 microvolts; it will also be necessary to have this output voltage controlled so that only a few microvolts may be fed into the receiver. In conjunction with the signal generator, a sensitive output meter should be used for determining the maximum signal voltage developed across the voice coil of the loud speaker. In addition to this equipment, it will be necessary when making a final adjustment of the "Discriminator" tuned circuit to use a milliammeter having a range of 0 to 10 milliamperes connected in series with the cathode of the No. 6J5 oscillator control tube by means of an adaptor plug inserted between the tube and its socket. The leads to the meter should not be longer than 15", and should be shunted at the socket connections by a capacitor of not less than 0.25 Mfd.

In order to make the aligning adjustments in an easy and satisfactory manner, it is recommended that the Stromberg-Carlson P-27657 and P-27658 aligning tools be used.

Before proceeding with the alignment of any circuits in these receivers, except when specifically directed, be sure that the "Signal Admission Control" is set for the maximum sensitivity position, that the Fidelity Control knob is set for the "Normal" position and that the "Manual-Electric" control knob is set to the "Off" position. The "Off-On-Bass" control should also be set for the "Normal" position. In making any alignment adjustments always adjust the test oscillator's output voltage to the minimum value where a good alignment may still be obtained, except when specifically directed in these instructions. Figures Nos. 1 and 2, show the location of all the aligning capacitors or adjustments for this receiver. It will not be necessary to remove the chassis in this receiver from its cabinet in order to make any alignment adjustments. The alignment adjustments for the Intermediate Frequency circuits are accessible from the rear of the receiver, and the adjustments for the Radio Frequency circuits are accessible through the apertures located in the bottom metal base plate of the chassis. These apertures are easily accessible through the bottom of the cabinet shelf. **Never align any of these receivers without having the metal base plate fastened to the chassis base.**

Dial Adjustment

Before aligning the circuits of these receivers, the tuning dial must be properly aligned to "track" with the gang tuning capacitor. To check whether the dial is set correctly with respect to the gang tuning capacitor, rotate the "Rapid Station Selector" knob in a clockwise direction so that the gang tuning capacitor is set to its maximum capacity position. Then, with the receiver turned "on", the illuminated dial indicator line should be exactly centered over the dial alignment lines (black lines) which are located at the extreme low frequency end of each scale on the dial. If these lines do not center over the illuminated dial indicator line, loosen the two set screws located on the hub of the dial. Then, rotate the dial so that these alignment lines are centered over the illuminated dial indicator line. The two set screws of the dial hub should then be securely tightened.

Intermediate Frequency Adjustments

The intermediate frequency used in these receivers is 465 kilocycles. Because of the necessity of obtaining the proper shape of resonance curve of these stages in a high fidelity receiver, it is recommended that unless it is absolutely essential, these I. F. adjustments be untouched. In the factory these adjustments are made using a visual system which allows the operator to see the exact shape of the resonance curve. For this reason

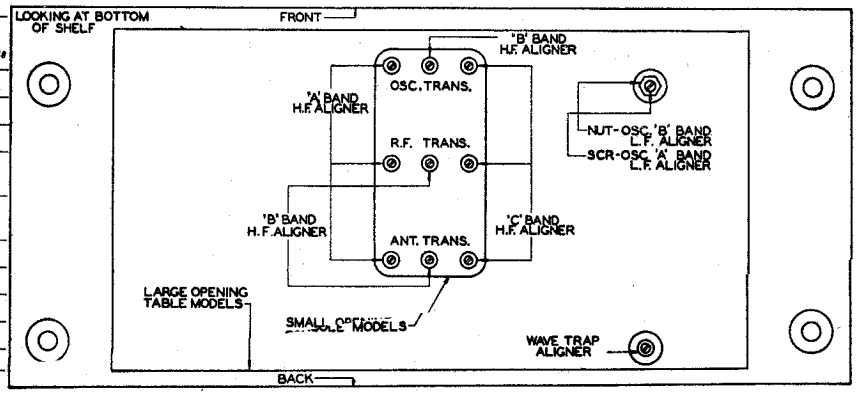

Fig. 2. View Through Chassis Mounting Shelf Showing Adjusting Screws for R. F. Aligning Capacitors.

MODEL 245 Series
Alignment, Part 2
Tuner, Parts

STROMBERG-CARLSON TEL. MFG. CO.

It is best to have these adjustments made at the factory. However, in the case where this cannot be done, the following procedure should be followed.

1. Operate the Range Switch of the receiver to the Standard Broadcast range position and set the tuning dial to its extreme low frequency position. Set the Fidelity control knob to its "Normal" position, the "Manual-Electric" control knob to the "Manual" position, and the "Off-On-Bass" control knob to its normal position.

   CAUTION: Never attempt to align the R. F. or I. F. circuits of this receiver with the Fidelity control knob set at any position other than the "Normal" position and the "Manual-Electric" control knob set at the "Electric" position unless specifically directed in the following paragraphs. Also, do not make any aligning adjustments of the R. F., I. F., or "Discriminator" circuits with the A. F. C. switch (which is located on rear of the chassis base) set at the "set-up" position. See Fig. 5.

2. Apply between the chassis base (or ground binding post) of the receiver and the grid of the No. 6A8 modulator-oscillator tube, a modulated signal of 465 kilocycles from the signal generator, using a 0.1 mfd. capacitor in series with the connection between the output terminal of the signal generator and the grid of the No. 6A8 tube. Do not remove the chassis grid lead connecting to this tube. The ground (or low side) terminal of the signal generator should be connected to either the chassis base or the ground binding post.

3. Now, noting from Fig. 1, the alignment adjustments for the First and Second I. F. transformers, align the I. F. circuits in the following order:

   Adjust the Second I. F. transformer primary circuit for maximum output.

   Adjust the Second I. F. transformer secondary circuit for maximum output.

   Adjust the First I. F. transformer primary circuit for maximum output.

   Adjust the First I. F. transformer secondary circuit for maximum output.

   Carefully make all of the above adjustments, watching carefully the output meter so that the peak reading is obtained for each adjustment. As each adjustment is made reduce the output of the test oscillator as required.

4. To adjust the Discriminator circuit proceed as follows:

   Check the position of the "Manual-Electric" control knob which should be set to the "Manual" position. CAUTION: **Before adjusting this circuit be sure that the I. F. amplifier is tuned exactly to 465 kilocycles.** With the signal generator still set at a frequency of 465 kilocycles, adjust the signal generator's output control so that a signal of 50,000 to 100,000 microvolts is fed into the No. 6A8 modulator-oscillator tube. Now, observe the reading of the milliammeter which is connected in series with the cathode of the No. 6J5 oscillator control tube, and rotate the "Manual-Electric" control knob to the "Electric" position, observing whether there is any difference in the reading of the milliammeter. When this circuit is correctly adjusted, there should be no difference in the reading of the milliammeter when the "Manual-Electric" control knob is rotated from the "Manual" to the "Electric" position. If there is any difference in the milliammeter reading while rotating this control knob from the "Manual" to the "Electric" position and vice versa, adjust the "Discriminator" circuit by means of the screw adjustment located on the top of the Discriminator transformer until the meter reading has the same value regardless of whether the "Manual-Electric" control knob is rotated to the "Manual" or "Electric" position. When this condition is obtained, the Discriminator circuit is properly adjusted.

Radio Frequency Adjustments

The alignment of the radio frequency circuits in these receivers should be very carefully made and in the order specified.

When making any aligning adjustments of these circuits, the "Manual-Electric" control knob should be rotated to the "Manual" position, the Fidelity Control knob should be set for "Normal" operation, and the "Off-On-Bass" control knob should also be set for "Normal" operation.

Alignment of Short Wave Range (Also Referred to as "C" Band)

In aligning the radio frequency circuits for this range, replace the 0.1-microfarad capacitor which was placed in series with the test oscillator's output lead for the I. F. alignments, with a 400-ohm carbon type resistor. This lead should then be connected to the antenna binding post located on the rear of the receiver chassis. The ground terminal (or low side) of the test oscillator should be connected to the ground binding post on the receiver.

1. Operate the Range Switch on the receiver chassis to the "C" range position, and set the test oscillator's frequency and the receiver's tuning dial to 16 megacycles.
2. Adjust the oscillator's "C" band high frequency aligner for maximum output.
3. Adjust the R. F. interstage "C" band high frequency aligner for maximum output and at the same time rotate the gang tuning capacitor back and forth through resonance until maximum output is obtained.
4. Adjust the antenna's "C" band high frequency aligner for maximum output, at the same time rotate the gang tuning capacitor back and forth through resonance until maximum output is obtained.

Alignment of Medium Wave Range (Also Referred to as "B" Band)

In aligning the radio frequency circuits for this range, use the same artificial antenna (400-ohm carbon type resistor) in series with the output terminal of the test oscillator as was used for aligning the short-wave range.

1. Operate the Range Switch on the receiver chassis to the "B" range position, and set the test oscillator's frequency and the receiver's tuning dial to 5 megacycles.
2. Adjust the oscillator's "B" band high frequency aligner for maximum output.
3. **Adjust** the R. F. interstage "B" band high frequency aligner for maximum output and at the same time rotate the gang tuning capacitor back and forth through resonance until maximum output is obtained.
4. Adjust the antenna's "B" band high frequency aligner for maximum output, and at the same time rotate the gang tuning capacitor back and forth through resonance until maximum output is obtained.
5. Set the test oscillator's frequency and the receiver's tuning dial to 1.8 megacycles.
6. Adjust the oscillator's "B" band low frequency aligner (series aligner), and at the same time rotate the gang tuning capacitor back and forth through resonance until maximum output is obtained.
7. Reset both the test oscillator's frequency and the receiver's tuning dial to 5 megacycles and repeat operations Nos. 2, 3 and 4.

Alignment of Standard Broadcast Range (Also Referred to as "A" Band)

In aligning the radio frequency circuits for this range, replace the 400-ohm carbon type resistor in series with the test oscillator's output lead with a 200-micro-microfarad capacitor and align these circuits as follows:

1. Operate the Range Switch to the "A" range position and set the test oscillator's frequency and the receiver's tuning dial to 1.5 megacycles.
2. Adjust the oscillator's "A" band high frequency aligner for maximum output.
3. Adjust the R. F. interstage "A" band high frequency aligner for maximum output.
4. Adjust the antenna's "A" band high frequency aligner for maximum output.
5. Set the test oscillator's frequency and the receiver's tuning dial to 0.6 megacycles.
6. Adjust the oscillator's "A" band low frequency aligner (series aligner) for maximum output, and at the same time rotate the gang tuning capacitor slightly back and forth through resonance until maximum output is obtained.
7. Reset both the test oscillator's frequency and receiver's tuning dial to 1.5 megacycles and repeat operations Nos. 2, 3 and 4.

FOR
- PROCEDURE FOR OBTAINING REPRODUCTION FROM PHONOGRAPH RECORDS,
- INSTRUCTIONS FOR SETTING UP ELECTRIC TUNING ARRANGEMENT,
- Wave Trap Adjustment, — SEE MODELS 235

Piece Number	Schematic Circuit Designation	Part
18704	R35	Resistor, Type "B", 15,000 Ohms
22775	C43, C56	Capacitor, .4 Mfd.
23517		Tube Socket, 7 Prong
24368		Cord, Power Supply
24405	C6, C13, C28, C36, C39, C45, C46, C63	Capacitor, .04 Mfd.
24559	C67, C68	Capacitor, Type "O", 100 Mmfd.
25149	C38, C48	Capacitor, .01 Mfd.
25481	C55	Capacitor, .002 Mfd.
25487	C15, C61	Capacitor, Type "W", .001 Mfd.
28555	L36, L37, L38	Discriminator Transformer
28565	R17	Resistor, Type "E", 680 Ohms
28567	C62	Capacitor, Type "O", 60 Mmfd.
28568	C23	Capacitor, Type "O", 100 Mmfd.
28572		Drive Assembly
28605	L23, L24	Second I. F. Transformer
28616		A. F. C. Switch
25495	C57, C58	Electrolytic Capacitor, 10 Mfd., 25 Volts, and 10 Mfd., 25 Volts
25504	C49, C59	Capacitor, Type "I", 100 Mmfd.
25526	R29	Resistor, Type "F", 15,000 Ohms
25539		Tube Socket, 8 Prong
25814	L39	R. F. Choke Coil
26151	C47	Capacitor, .005 Mfd.
26200	L29	Choke Assembly
26287		Pilot Lamp
26322	R28, R40	Resistor, Type "E", 120 Ohms
26328	R27	Resistor, Type "E", 390 Ohms
26333	R8	Resistor, Type "E", 1000 Ohms
26345	R6.	Resistor, Type "E", 10,000 Ohms
26349	R11	Resistor, Type "E", 22,000 Ohms
26353	R2, R4, R9, R13, R24	Resistor, Type "E", 47,000 Ohms
26357	R1, R3, R7, R12, R22, R26, R44	Resistor, Type "E", .1 Megohm
26362	R10, R18, R25, R38, R39	Resistor, Type "E", .27 Megohm
26365	R15, R21, R23, R37, R43	Resistor, Type "E", .47 Megohm
26369	R16, R30, R41	Resistor, Type "E", 1 Megohm
26373	R34, R42	Resistor, Type "E", 2.2 Megohms
26497		Tuning Indicator Cable Assembly
26564	C17, C19	Capacitor, Oscillator Low Frequency Aligners
26678		Socket, Phono-Jack
26775	R19	Resistor, Type "F", 20,000 Ohms
27078	C27, C31, C32, C42, C60	Capacitor, Fixed Tuning, 100 Mmfd.
27081	C2	Capacitor Aligning
27101	C35	Capacitor, Type "O", 300 Mmfd.
27102		Pulley Assembly
27108	C8, C9, C25, C26, C29, C30, C33, C34, C40, C41	Capacitor, Two, .05 Mfd., 400 Volts
27110		Spring
27123	C51	Electrolytic Capacitor, 16 Mfd., 300 Volts
27125	R32	Resistor, Type "F", 25,000 Ohms
27134	L37, L38	Output Transformer
27141		Dial Hub Plate
27143	C3, C4, C5, C10, C11, C12, C16, C18, C20	H. F. Aligners for Antenna, R. F. and Oscillator Transformers
27148	L1	Coil Assembly, Wave Trap
27159		Belt
27189	L30, L31, L32, L33	Power Transformer (50 to 60 Cycles Chassis)
27190	L30, L31, L32, L33	Power Transformer (25 to 60 Cycles Chassis)
27196		Range Switch Assembly
27236		Mask Assembly (Selectorlite Dial)
27237		Arm Assembly (Mask Actuator)
27238		Rod, Mask (Actuator)
27239		Dial (Tuning)
27264	L2, L3, L4, L5, L6, L7	Coil Assembly, Antenna Transformer
27265	L8, L9, L10, L11, L12, L13	Coil Assembly, R. F. Transformer
27266	L14, L15, L16, L17, L18, L19	Coil Assembly, Oscillator Transformer
27305	C46, C66	Capacitor, Type "O", 50 Mmfd.
27313		Switch for Fidelity Control
27314	L20, L21, L22	First I. F. Transformer
27332		Indicator, Frame Assembly
27336	C53	Electrolytic Capacitor, 16 Mfd., 500 Volts
27337	C65	Capacitor, Type "W", .004 Mfd.
27339		Switch, "Off-On-Bass" (Used on Radio Models only)
27341	R20	Resistor, Flexible 200 Ohms
27374	R31, R33	Resistor, "B" Voltage Divider
27407	R36	Resistor, Type "EB", 22,000 Ohms
27411		Clamp Assembly, Tuning Indicator
27493	C1	Capacitor Assembly; Four, .002 Mfd.
27537	C24, C50, C52	Electrolytic Capacitor, 4 Mfd., 400 Volts; 4 Mfd., 250 Volts; 4 Mfd., 250 Volts
27538	C22	Capacitor, Type "W", .005 Mfd.
27540		Switch, Signal Admission Control
27569	R14	Volume Control
27577	C37	Capacitor, Type "O", 15 Mmfd.
27622	C54	Electrolytic Capacitor, 16 Mfd., 500 Volts
27646	C44	Capacitor, .002 Mfd.
28486	C7, C14, C21	Gang Tuning Capacitors
28492		Adjustable Capacitors and Switches Assembly for Electric Tuning
28522		Electric Tuning Cable Assembly
28523		Electric Tuning Cable Assembly
28549	L34	Antenna Coil for "Electric" Tuning
28550	L35	Oscillator Coil for "Electric" Tuning
28653		Shuttle Switch for "Manual-Electric" Tuning Capacitors
28693	R5	Resistor, Type "E", 2700 Ohms
28699		Pilot Lamp Socket Assembly for Tuning Dial
28700		Pilot Lamp Socket Assembly for Station Call Letters
28702		Lever Assembly for "Manual-Electric" Control Switch
28704		Drive Rod for "Manual-Electric" Control Switch
28705		Button for "Manual-Electric" Control Switch
28711		Cam and Bracket Assembly for "Manual-Electric" Control
28720		Spring for "Manual-Electric" Control Switch

Used only on No. 245-P Receivers

25301	Cord, Power Supply for Phono Motor
26751	"Off-On-Bass-Phono" Switch
27947	Shielded Cord Assembly
28118	Pilot Lamp Socket Assembly

MISCELLANEOUS PARTS

Piece Number	Part
27800	Knob Assembly (Used on "Volume", "Range Switch" and "Off-On-Bass" Controls' Shafts)
27801	Knob Assembly (For "Fidelity" Shaft)
27802	Knob Assembly (For "Rapid Station Selector" Control Shaft)
27803	Knob Assembly (For "Vernier Station Selector" Control Shaft)
27628	Felt Washer (Used on "Volume", "Fidelity", "Range Switch" and "Off-On-Bass" Controls' Shafts)
27630	Felt Washer (For "Rapid Station Selector" Control Shaft)
28504	Knob (For Stations' Selectors of Electric Tuning)
28603	Knob (For "Manual-Electric" Control)

©John F. Rider, Publisher

STROMBERG-CARLSON TEL. MFG. CO.

MODELS 260L,-LB
260P,-PB
Schematic,Specs.

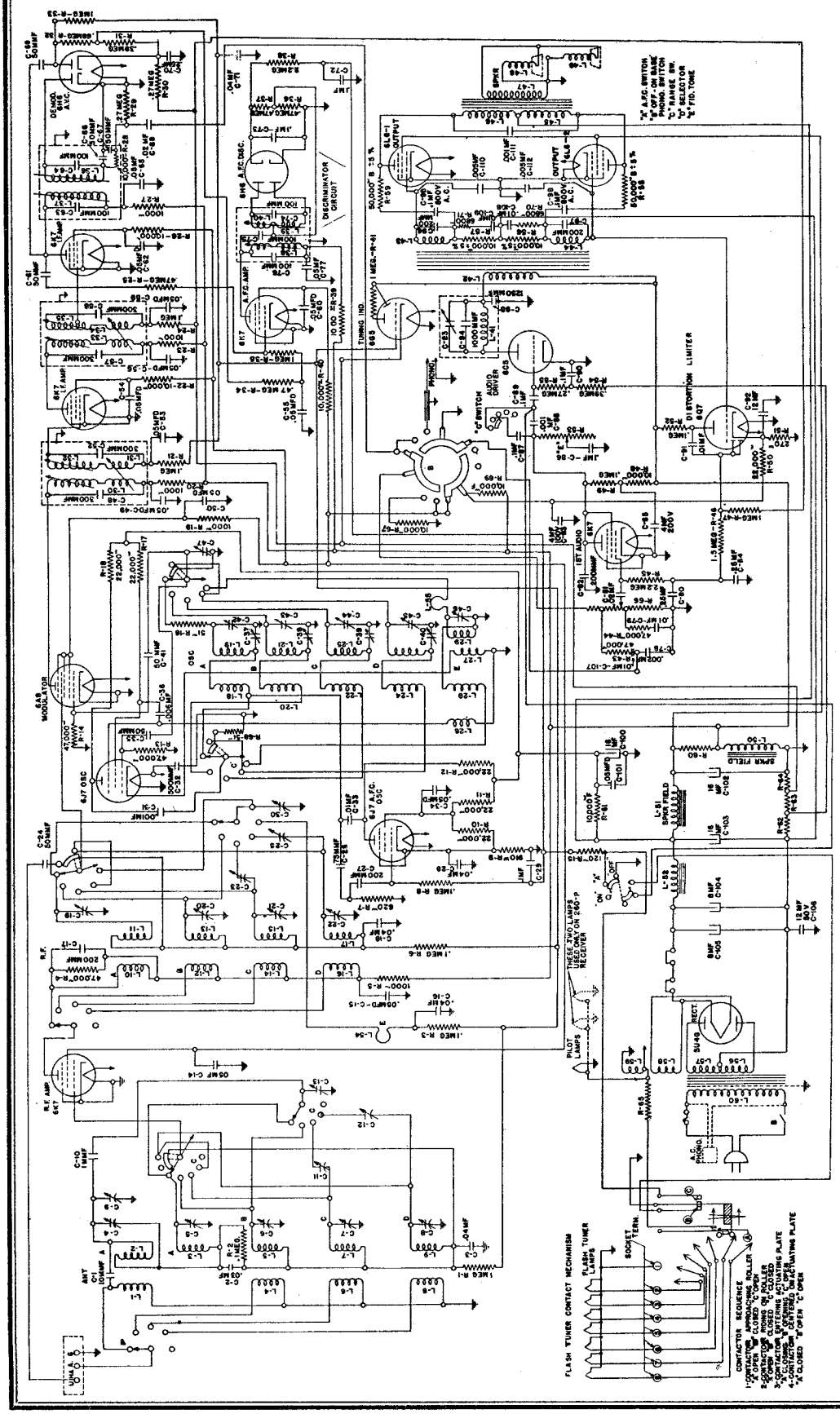

ELECTRICAL SPECIFICATIONS

Type of Circuit	Superheterodyne with Automatic Frequency Control
Tuning Ranges	A—530 to 1600 Kc.; B—1600 to 4800 Kc.; C—4800 to 11,000 Kc. D—11,000 to 22,000 Kc.; E—22,000 to 60,000 Kc.
Number and Types of Tubes	5 No. 6K7; 1 No. 6A8; 2 No. 6J7; 2 No. 6H6; 1 No. 6C5; 1 No. 6Q7; 2 No. 6L6; 1 No. 6G5; 1 No. 5U4G
Input Voltage Rating	105 to 125 Volts, A. C.
Power Frequency Rating	25 to 60 Cycles and 50 to 60 Cycles
Input Power Rating:	
No. 260-L	185 Watts
No. 260-P	260 Watts
Frequency of Intermediate Amplifier	465 Kilocycles

IF PEAK 465 KC

Stromberg-Carlson

No. 260 Radio Receivers

©John F. Rider, Publisher

MODEL 260 Series
Chassis Views

STROMBERG-CARLSON TEL. MFG. CO.

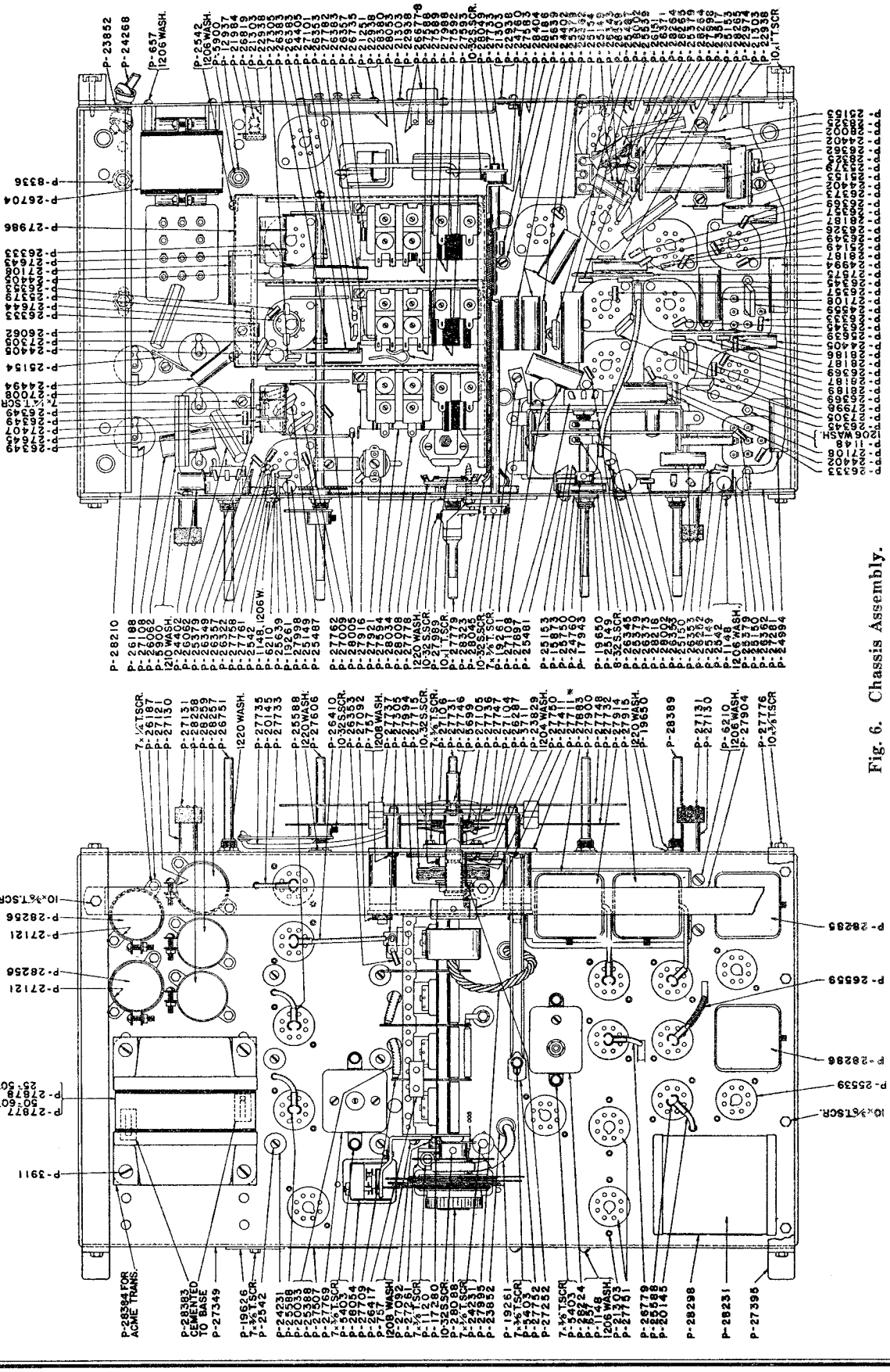

Fig. 6. Chassis Assembly.

©John F. Rider, Publisher

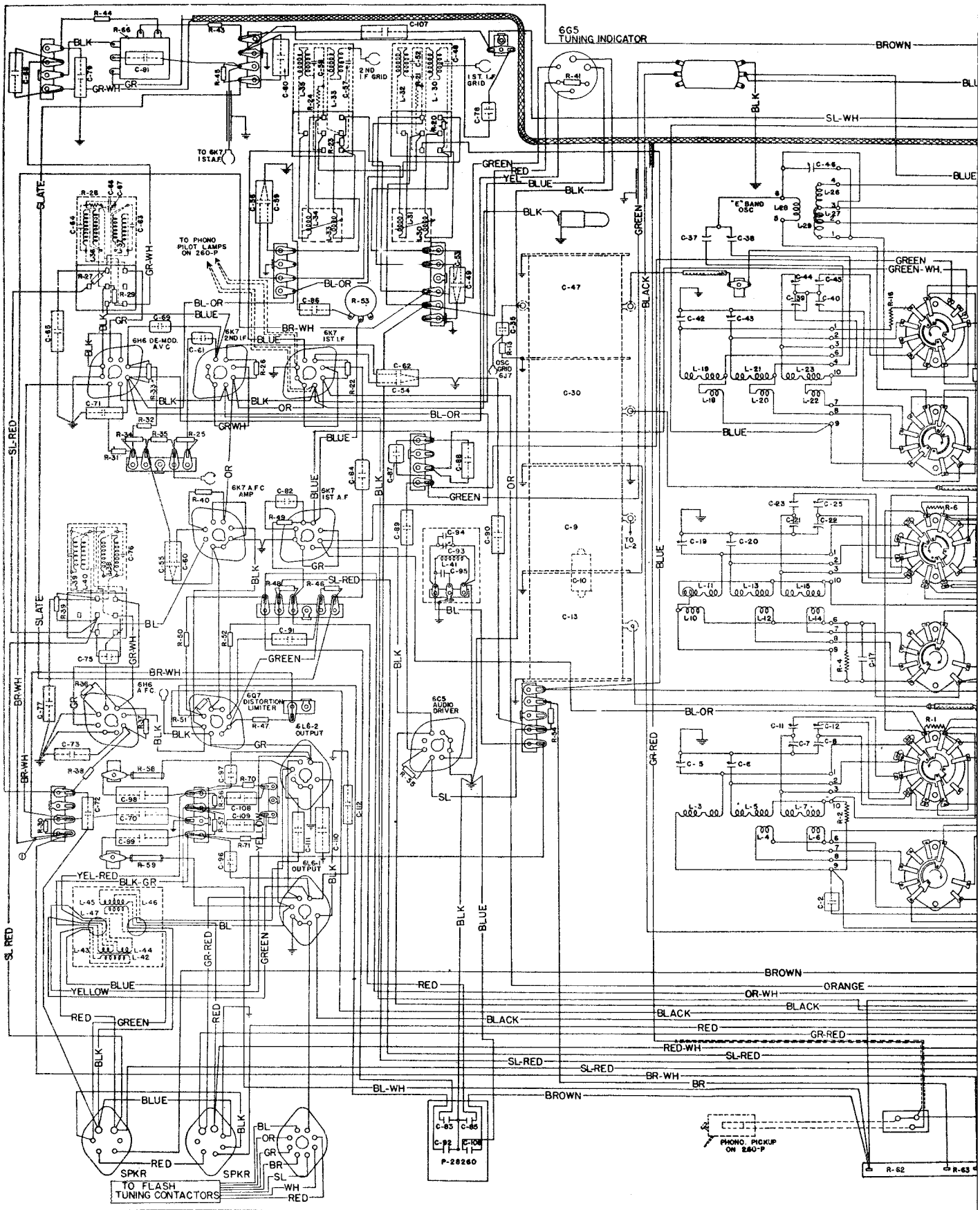

©John F. Rider, Publisher

TEL. MFG. CO.

MODEL 260 Series
Chassis Wiring
Phono. Data

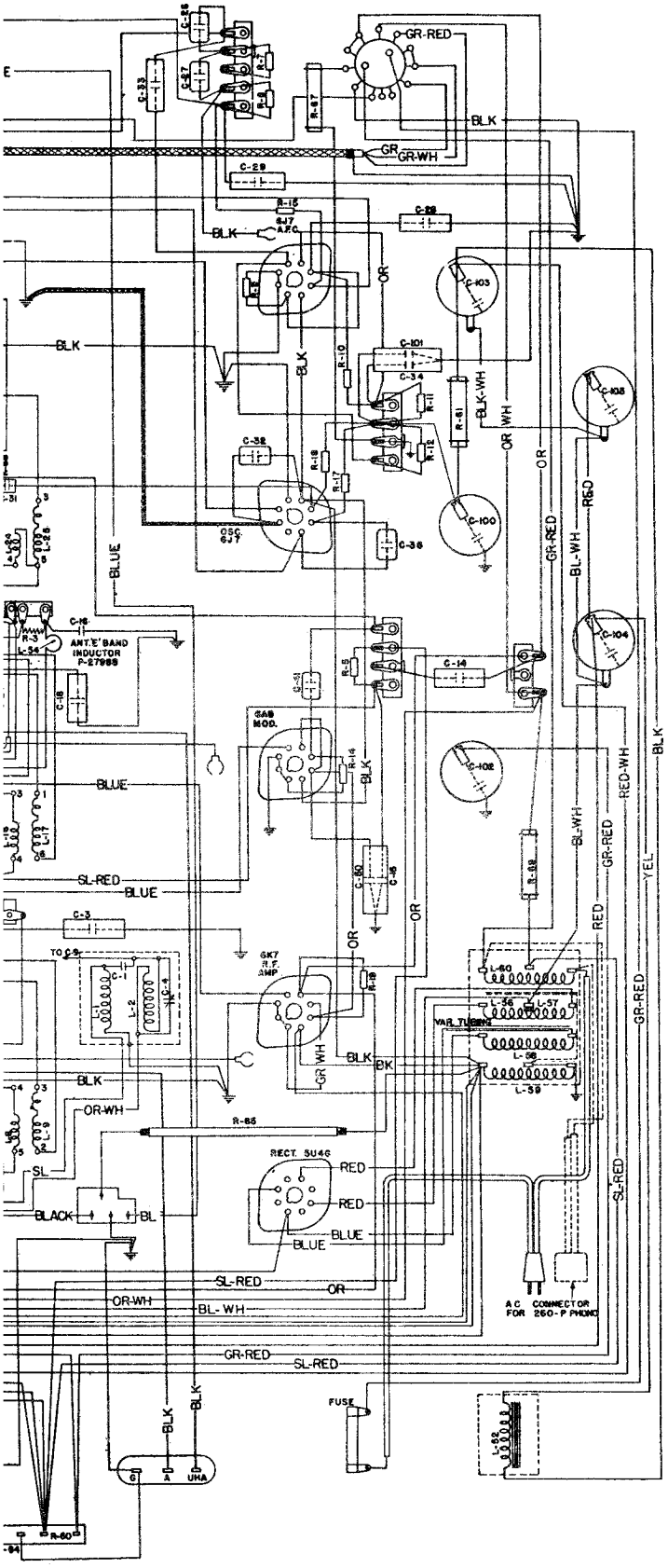

PROCEDURE FOR OBTAINING REPRODUCTION FROM PHONOGRAPH RECORDS

A socket having three contacts is provided on the rear of the chassis base of the No. 260-L Receiver, and is wired to the "Off-On-Bass-Phonograph" switch assembly located on the front of the receiver. A three prong plug is also inserted in the socket so that if at any time it is desired to use an electric pick-up and phonograph unit in conjunction with this receiver, it may readily be accomplished.

In order to obtain the best quality of phonograph reproduction when using an electric pick-up and phonograph unit with this receiver, a Stromberg-Carlson No. 10 Record Player is recommended. This record player is equipped with a correctly designed single record playing motor unit, and uses a crystal type pick-up in conjunction with a specially equalized circuit. To attach this instrument to a No. 260-L Receiver, it is only necessary to remove the three-prong plug furnished with the receiver and insert the three-prong plug which comes with the unit into the three-prong socket located on the rear of the chassis base. Then, the power supply plug of the phonograph unit should be inserted into a suitable power supply receptacle, and the unit will be ready for use.

If the Stromberg-Carlson No. 10 Record Player is not used and the electric pick-up to be used is of the high impedance type, it will be necessary to connect a low capacity shielded cable between the three-prong plug furnished with the receiver and the pick-up. This shielded cable should be of the low capacity type, in order to prevent the excessive cutting of high frequencies which is caused when a shielded cable having high capacity is used. The length of the shielded cable used should be kept as short as possible.

If a pick-up of the low impedance type is used, it will be necessary to connect a "matching transformer" between the three-prong plug and the pick-up. The transformer should be located as near to the receiver as possible, in which case it will not be necessary to use a shielded cable.

©John F. Rider, Publisher

NORMAL VOLTAGE READINGS

The various values of voltages listed in the following table are obtained by measuring between the various tube socket contacts and the chassis base, with the tubes in their respective sockets. The receiver is, therefore, in operation when the measurements are made. Figure 1, shows the terminal layout of the sockets with the proper terminal numbers.

			Terminals of Sockets								*Heater Voltages Between Heater Terminals*	
Tube	*Circuit*	*Cap*	1	2	3	4	5	6	7	8	*Socket Terminal Numbers*	*Volts*
6K7	R. F. Amp.	0	0	0	+235	+90	0	+85	*6.3*	0	2-7	*6.3*
6A8	Modulator	0	0	0	+235	+85	—1.8	+85	*6.3*	0	2-7	*6.3*
6J7	Oscillator	0	0	*6.3*	+80	+185	0	0	0	0	2-7	*6.3*
6J7	Oscillator Control	0	0	0	+195	+115	+5.8	0	*6.3*	+5.8	2-7	*6.3*
6K7	1st I. F. Amp.	0	0	0	+235	+75	0	+92	*6.3*	0	2-7	*6.3*
6K7	2nd I. F. Amp.	0	0	0	+235	+75	0	+92	*6.3*	0	2-7	*6.3*
6H6	Demodulator —A. V. C.	—	0	0	—0.2	0	0	—1.4	*6.3*	0	2-7	*6.3*
6K7	A. F. C. Amplifier	0	0	0	+235	+75	0	+92	*6.3*	0	2-7	*6.3*
6H6	A. F. C. Discriminator	—	0	0	—0.2	0	—0.2	—0.2	*6.3*	0	2-7	*6.3*
6K7	1st Audio Amp.	0	0	0	+48	+48	0	—1.4	*6.3*	0	2-7	*6.3*
6C5	Audio Amp. Driver	—	0	0	+220	—0.1	—0.1	—	*6.3*	0	2-7	*6.3*
6Q7	Full Power Quality Control	0	0	0	+165	0	0	—20	*6.3*	+1.0	2-7	*6.3*
6L6 (No. 1)	Audio Output	—	0	0	+400	+275	—22	—	*6.3*	0	2-7	*6.3*
6L6 (No. 2)	Audio Output	—	0	0	+400	+275	—22	—	*6.3*	0	2-7	*6.3*
6G5	Tuning Indicator	—	*6.3*	+15*	—1.4	+240	—2.5	0	—	—	1-6	*6.3*
5U4G	Rectifier	—	0	+410	—	*420*	—	*420*	—	+410	2-8	*5.1*
Speaker Socket (6 Prong)		—	+245	—	+410	+410	0	0	—	—		
Speaker Socket (7 Prong)		—	+505	0	0	+415	+415	—	+270	—		

A. C. voltages are indicated by italics. Receiver tuned to 1000 kc., no signal.

Voltages are given for a line voltage of 120 volts, and allowance should be made for differences when the line voltage is higher or lower. A meter having a resistance of 1000 ohms per volt should be used for measuring the D. C. Voltages. Voltage values shown are those obtained on the lowest possible scale of a meter having the following ranges: 0-2.5, 0-10, 0-100, 0-250, 0-500, 0-1000 volts except when an asterisk appears after any given voltage value in which case the 250 volt scale was used.

ALIGNMENT DATA

Dial Adjustment

Before aligning the circuits of these receivers, the tuning dial must be properly aligned to "track" with the gang tuning capacitor. To check whether the dial is set correctly with respect to the gang tuning capacitor, rotate the "Rapid Station Selector" knob in a counter-clockwise direction so that the gang tuning capacitor is set to its maximum capacity position. Then, with the receiver turned "on", the illuminated dial indicator line should be exactly centered over the dial alignment lines (black lines) which are located at the extreme low frequency end of each scale on the dial. If these lines do not center over the illuminated dial indicator line, loosen the two set screws located on the hub of the dial. Then, rotate the dial so that these alignment lines are centered over the illuminated dial indicator line. The two set screws of the dial hub should then be securely tightened.

Intermediate Frequency and A. F. C. Circuit Adjustments

The intermediate frequency system employed in these receivers has a complex circuit arrangement. Because of the necessity of obtaining the proper shape of resonance curve of these stages in a high fidelity receiver, it is recommended that unless it is absolutely essential, these I. F. adjustments be untouched. In the factory these adjustments are made using a visual system which allows the operator to see the exact shape of the resonance curve. For this reason it is best to have these adjustments made at the factory. However, in the case where this cannot be done, the following procedure should be followed:

1. Operate the Range Switch of the receiver to the "A" range position, and set the tuning dial to its extreme low frequency position. Set the Fidelity Control to its "Normal" position, the Automatic Frequency control knob to the "Off" position and the "Off-On-Bass-Phonograph" control knob to its "Normal" position. **Never attempt to align the R. F. or I. F. circuits of these receivers with the Fidelity Control knob set at any position other than the "Normal Fidelity" position, and the Automatic Frequency Control knob set at the "On" position unless specifically directed in the following paragraphs.**
2. Apply between the chassis base (or ground binding post) of the receiver and the grid of the No. 6K7 tube used in the second I. F. amplifier, a modulated signal of 465 kilocycles from the signal generator, using a 0.1 mfd. capacitor in series with the connection between the output terminal of the signal generator and the grid of the No. 6K7 tube. Do not remove the chassis grid lead connecting to this tube. The ground (or low side) terminal of the signal generator should be connected to either the chassis base or ground binding post terminal.
3. Now, noting from Figure 1, the alignment adjustments for the I. F. circuits proceed in the following order:

   Adjust the third I. F. transformer primary circuit for maximum output.

   Adjust the third I. F. transformer secondary circuit for maximum output.
4. Remove the lead connecting the signal generator (through the 0.1 mfd. capacitor) to the grid of the No. 6K7 tube of the second I. F. amplifier and connect this lead to the grid of the No. 6K7 tube of the first I. F. amplifier; then aiign in the following order:

   Adjust the second I. F. transformer secondary circuit for maximum output.

   Adjust the second I. F. transformer primary circuit for maximum output.
5. Remove the signal generator lead connecting to the grid of the No. 6K7 tube of the first I. F. amplifier and connect it to the grid of the No. 6A8 modulator tube; then align in the following order:

   Adjust the first I. F. transformer secondary circuit for maximum output.

   Adjust the first I. F. primary circuit for maximum output.
6. Check all the above adjustments again with the signal generator lead connected to the grid of the No. 6A8 modulator tube and in the order as given above.

Carefully make all the above adjustments, carefully watching the output meter and reduce the output of the test oscillator as required.

Adjustment of the Discriminator Tuned Circuits

To properly adjust the tuned circuits of the discriminator transformer, check the position of the A. F. C. Control knob which should be set to the "off" position. **Before making this circuit adjustment be sure that the I. F. amplifier and signal generator are exactly in resonance at 465 kilocycles.** Connect a high resistance voltmeter having a resistance of at least 1000 ohms per volt across the junction of the resistors R-37, R-38 and the chassis base. It is preferable to use the 500 volt scale of this meter in order that the load imposed on the discriminator circuit will not be too great. The D. C. milliammeter previously mentioned should be connected in series with the cathode of the No. 6J7 oscillator control tube exactly as described in the second paragraph of the Alignment Data. The signal generator should remain connected to the grid of the No. 6A8 modulator tube the same way as connected when making the aligning adjustments of the I. F. Amplifier circuits. The signal generator's output control should be adjusted so that a signal of 10,000 microvolts is fed into the modulator tube. Now, slightly detune the secondary circuit of the Discriminator transformer so that a fair voltage indication is obtained on the high resistance voltmeter connected across the junction of the resistors R-37, R-38, and the chassis base, and then adjust the primary circuit of the Discriminator transformer until a maximum reading is obtained on the voltmeter. Now, again adjust the secondary circuit of the Discriminator transformer so that zero reading is obtained on the voltmeter. Care should be taken that the meter does not read below zero.

CAUTION: In order to make sure that this adjustment of the secondary circuit of the Discriminator transformer has been correctly made, the adjusting screw should be turned gradually so that the indicator of the voltmeter will first return to zero, and then while continuing to turn this screw in the same direction, will go slightly below the zero mark, after which the screw should be turned in the opposite direction until the indicator is again brought back to the zero mark. If the above described condition cannot be obtained, this adjusting screw adjustment for the secondary circuit of the Discriminator transformer has been rotated in the wrong direction, and it will be necessary to carefully turn it in the opposite direction. After this adjustment has been made, it will not be necessary to use the voltmeter any more and it can be removed from the receiver circuit.

When the above adjustments have been carefully made, the milliammeter connected in the cathode circuit of the No. 6J7 oscillator control tube should be observed, and if the tuned circuits of the discriminator transformer are correctly adjusted there should be no difference in the reading of this milliammeter when the A. F. C. control knob is rotated from the "off" to the "on" position. If the above condition does not exist, the secondary circuit of the Discriminator transformer should be readjusted until the milliammeter has the same value regardless of whether the A. F. C. control knob is rotated to the "on" or "off" position.

Radio Frequency Adjustments

The alignment of the radio frequency circuits in these receivers should be very carefully made and in the order specified.

When making any aligning adjustments of these circuits, the A. F. C. Control knob should be rotated to the "off" position, the Fidelity Control knob should be set for "Normal" operation, and the "Off-On-Bass-Phonograph" Control knob should also be set for "Normal" operation.

Alignment of Ultra-Short Wave Range (Also referred to as "E" Band)

In order to align the circuits of this range, it is desirable to have a signal generator whose high frequency range will go to 60 megacycles. Such equipment, however, is rare and costly, and in most cases it will be necessary to make use of a signal generator whose high frequency range does not extend beyond 20 megacycles, using harmonics of 20 megacycles for aligning this range on 60 megacycles.

In aligning the radio frequency circuits for this range, replace the 0.1 mfd. capacitor which was placed in series with the signal generator's output lead for the I. F. alignment with a 400-ohm carbon type resistor. This lead should then be connected to the antenna binding post marked "U. H. A." located on the rear of the receiver chassis. The ground terminal (or low side) of the signal generator should be connected to the ground binding post on the receiver.

1. Operate the Range Switch on the receiver chassis to the "E" range position and set the signal generator's frequency and the receiver's tuning dial to 60 megacycles.
2. Adjust the aligning capacitor C-46 until maximum voltage output is obtained on the output meter.
3. Set the signal generator's frequency and the receiver's tuning dial to 20 megacycles and adjust the "E" range trimming loop, L-54, until maximum voltage output is obtained on the output meter. The adjustment of this loop is obtained by distorting its normally circular shape until it offers the correct inductive effect. If the oscillator does not track with the tuning dial scale at this frequency, it will be necessary to also adjust the oscillator's tuning loop.
4. Reset both the signal generator's frequency and the receiver's tuning dial to 60 megacycles and repeat operation No. 2.

Alignment of Short-Wave Range (Also referred to as "D" Band)

In aligning the radio frequency circuits for this range use the same artificial antenna (400-ohm carbon type resistor) in series with the output terminals of the signal generator as was used for aligning the Ultra-Short Wave Range. Connect this lead to the antenna binding post marked "A" located on the rear of the receiver chassis, and align as follows:

1. Operate the Range Switch on the receiver chassis to the "D" range position and set the signal generator's frequency and the receiver's tuning dial to 20 megacycles.
2. Adjust aligning capacitors C-45, C-22, and C-8 respectively; and at the same time rotate the gang tuning capacitor slightly back and forth through resonance until maximum voltage output is obtained on the output meter.
3. Set the signal generator's frequency and the receiver's tuning dial to 11 megacycles and adjust aligning capacitors C-40, C-25, and C-12 respectively; and at the same time rotate the gang tuning capacitor back and forth through resonance until maximum voltage output is obtained on the output meter.
4. Reset both the signal generator's frequency and the receiver's tuning dial to 20 megacycles and repeat operation No. 2.

Alignment of Short-Wave Range (Also referred to as "C" Band)

In aligning the radio frequency circuits for this range use the same artificial antenna and binding post on the receiver chassis as was used for aligning the "D" range.

1. Operate the Range Switch on the receiver chassis to the "C" range position and set the signal generator's frequency and the receiver's tuning dial to 10 megacycles.
2. Adjust the aligning capacitors C-44, C-21, and C-7 respectively; and at the same time rotate the gang tuning capacitor back and forth through resonance until maximum voltage output is obtained on the output meter.
3. Set the signal generator's frequency and the receiver's tuning dial to 5 megacycles and adjust the aligning capacitors C-39, C-23, and C-11 respectively; and at the same time rotate the gang tuning capacitor back and forth through resonance until maximum voltage output is obtained on the output meter.
4. Reset both the signal generator's frequency and the receiver's tuning dial to 10 megacycles and repeat operation No. 2.

Alignment of Aircraft Range (Also referred to as "B" Band)

In aligning the radio frequency circuits for this range, use the same artificial antenna and antenna binding post as was used for aligning the "C" range, and align this range as follows:

1. Operate the Range Switch on the receiver chassis to the "B" range position and set the signal generator's frequency and the receiver's tuning dial to 4.5 megacycles.
2. Adjust the aligning capacitors C-43, C-20, and C-6 respectively; and at the same time rotate the gang tuning capacitor back and forth through resonance until maximum voltage output is obtained on the output meter.
3. Set the signal generator's frequency and the receiver's tuning dial to 1.8 megacycles and adjust the aligning capacitor C-38 and at the same time rotate the gang tuning capacitor back and forth through resonance until maximum voltage output is obtained on the output meter.
4. Reset both the signal generator's frequency and the receiver's tuning dial to 4.5 megacycles and repeat operation No. 2.

Alignment of Standard Broadcast Range (Also referred to as "A" Band)

In aligning the radio frequency circuits for this range, replace the 400-ohm resistor in series with the signal generator's output with a 200-micro-microfarad capacitor and align this range as follows:

1. Operate the Range Switch to the "A" range position and set the signal generator's frequency and the receiver's tuning dial to 1.5 megacycles (1500 kilocycles).
2. Adjust the aligning capacitors C-42, C-19, C4, and C-5 respectively; and at the same time rotate the gang tuning capacitor back and forth through resonance until maximum voltage output is obtained on the output meter.
3. Set the signal generator's frequency and the receiver's tuning dial to 0.6 megacycles (600 kilocycles) and adjust the aligning capacitor C-37; and at the same time rotate the gang tuning capacitor back and forth through resonance until maximum voltage output is obtained on the output meter.
4. Reset both the signal generator's frequency and the receiver's tuning dial to 1.5 megacycles and repeat operation No. 2.

Adjustment of 10 Kilocycle Audio Cut-Off Filter

The adjustment of this filter is correctly made at the factory and no additional adjustment is required.

Instructions for Setting Up the A. F. C. Flash Tuning Unit

1. Remove the flash tuner lamp unit escutcheon plate by removing the four screws.
2. Remove the lists of station letters from the P-28420 package assembly which is tacked inside of the cabinet.
3. Remove the seven paper squares on which are printed the words "Tone", "Beauty", "Value", "Action", "Flash", "Tuning", and "Radio" from the square frames located on the rear side of the lamp unit escutcheon plate.
4. Remove the station letters of the seven stations which it is desired to set up in the flash tuning unit from the list of stations. It will be noted that the letters of the stations are printed on partly cut squares to facilitate ease in removing the desired letters. Insert one of these seven station letters into each frame of the flash tuner lamp unit. The recommended method of inserting these station letters into the frames of the escutcheon plate is to arrange them according to the frequency of the stations as follows:

   Looking at the front of the escutcheon plate the station having the highest frequency should appear in the top right-hand frame, and then in successive order according to frequency the remaining station letters should be inserted into the other frames; the top left-hand frame containing the station letters of the station having the lowest frequency. In inserting these letters into the frames be sure to have the letters located between two pieces of transparent material.
5. Fasten the escutcheon plate again to the lamp unit by means of the four screws. The receiver is now ready to be operated and the flash tuning unit contactors located on the rear of the chassis base adjusted for the seven favorite stations.
6. Rotate the "On-Off-Bass-Phonograph" Control knob from its complete counter-clockwise position, slightly clockwise from this position which turns the set "on" (indicated by illumination of the dial). Allow the receiver to reach operating temperature (about 15 minutes) before proceeding with setting up the flash tuning mechanism. Check the position of the Automatic Frequency Control knob which should be rotated to the "Off" position, and set the Fidelity Control knob to the "Normal" position. Now carefully tune in the desired station having the highest frequency, watching the tuning indicator so that the receiver will be exactly tuned to this station.
7. After carefully tuning in the desired station rotate the A. F. C. Control knob to the "On" position. Now, noting from Figure 3, the sketch which shows the contactor clamping frame and knurled nut, hold the clamping frame with one hand and loosen the knurled nut with the other hand. Then move the contactor, numbered 2, so that its point is engaged between the two small rollers of the switching mechanism as also shown in Figure 3. When the point is properly engaged between the rollers, the lamp of the lamp unit which is located behind the station letters of the station being tuned in will light. When this condition is obtained, retighten the large knurled nut and at the same time securely hold the gang tuning capacitor and the contactors from rotating by means of the extended portion of the contactor clamping frame. **It is extremely important to keep the gang tuning capacitor and the contactors from rotating when tightening the large knurled nut.**
8. Now rotate the A. F. C. Control knob to the "off" position and note whether the tuning has been shifted by watching the tuning indicator. If a change is noted it will be necessary to repeat operation No. 7.
9. When no change is noticed after performing the above operations Nos. 7 and 8, the remaining six favorite stations should be set up in the same manner.

   With the A. F. C. flash tuning unit in operation, the receiver will be automatically kept in tune with any one of the seven favorite stations as long as the station is operating or provided it has no unusual fading characteristics. If a distant station which is very weak is set up in the flash tuning unit, it will be found that the Automatic Frequency Control will not hold this station if a strong signal is present in either adjacent channel. This same phenomenon will occur if two stations in adjacent channels are almost of equal signal strength with the weakest signal fading slightly; with this condition the strong signal will have a tendency to "pull in" when the receiver is tuned to the station which is slightly weaker and fading.

©John F. Rider, Publisher

©John F. Rider, Publisher

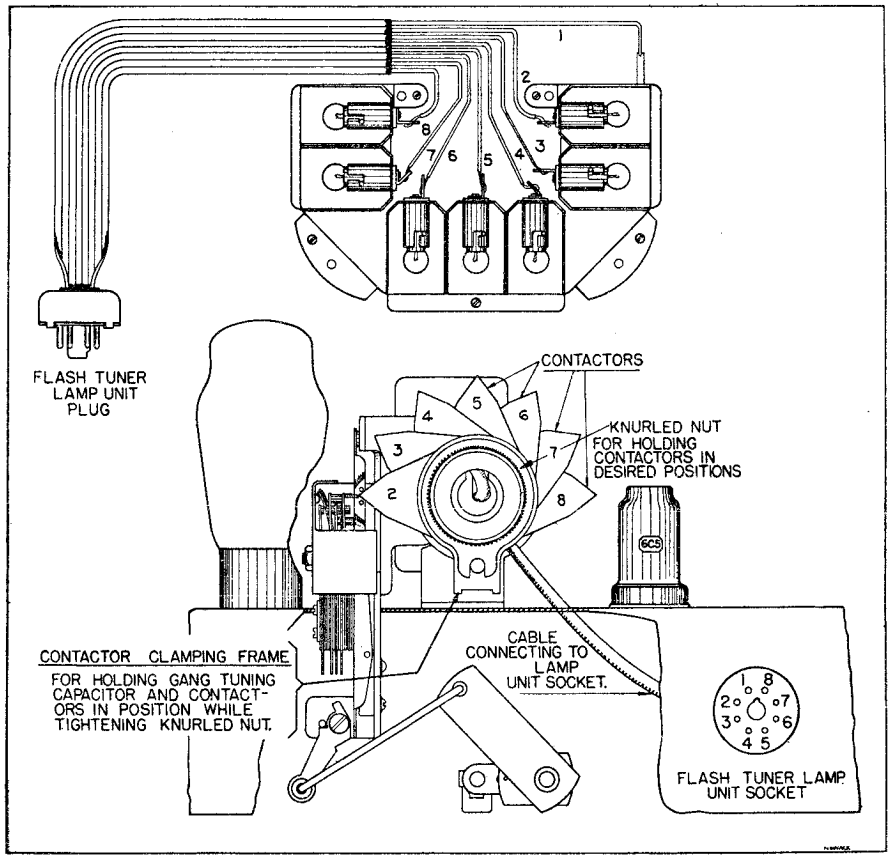

Fig. 3. Showing Flash Tuner Lamp Unit With Escutcheon Plate Removed (Top Figure) and Rear View of Receiver Showing Flash Tuner Mechanism (Bottom Figure).

A. F. C. FLASH TUNER PARTS

24760		Spring Washer
28045		Lever
28053		Rod for Actuating A. F. C. Switching Mechanism
28054		Lever and Spring Combination
28088		Contactors' Assembly
28097		Contact Disc for Contactor
28098		Contactor
28099		Insulation Disc between Contactors
28100		Clamping Plate
28102		Blue Wire of Cable Connecting to Flash Tuner Lamp Unit Socket
28102		Orange Wire of Cable Connecting to Flash Tuner Lamp Unit Socket
28102		Green Wire of Cable Connecting to Flash Tuner Lamp Unit Socket
28102		Brown Wire of Cable Connecting to Flash Tuner Lamp Unit Socket
28102		Slate Wire of Cable Connecting to Flash Tuner Lamp Unit Socket
28102		White Wire of Cable Connecting to Flash Tuner Lamp Unit Socket
28102		Red Wire of Cable Connecting to Flash Tuner Lamp Unit Socket
28296		Locking Ring Spring
28332		A. F. C. Switch Cable Assembly
28437	R50	Resistor, Flexible, 10 Ohms

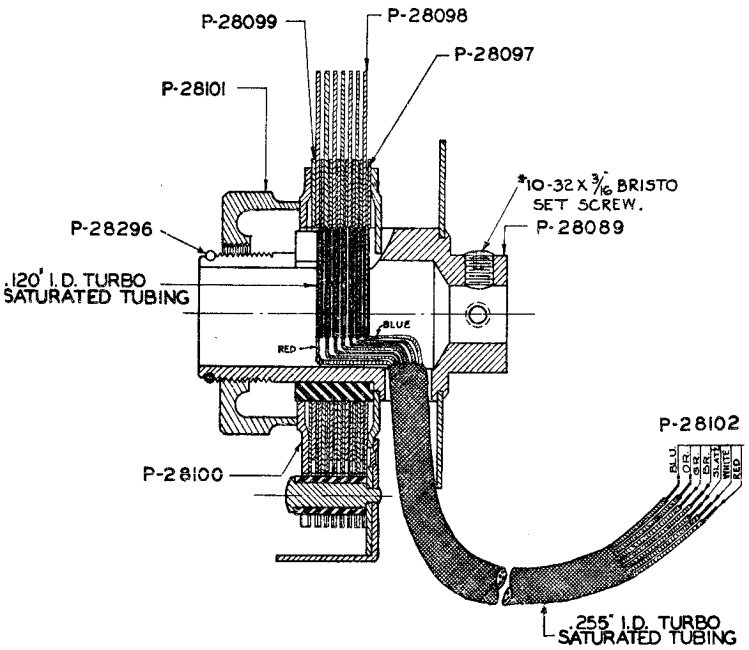

Fig. 5. Section View of Flash Tuner Contactors Assembly.

MISCELLANEOUS PARTS

27800		Knob Assembly (Used on Volume, Range Switch and Off-On-Bass-Phonograph Controls' Shafts)
27801		Knob Assembly (Used on Fidelity and A. F. C. Controls' Shafts)
27802		Knob Assembly (For Rapid Station Selector Control Shaft)
27803		Knob Assembly (For Vernier Station Selector Control Shaft)
27628		Felt Washer (Used on Volume, Fidelity, Range Switch, A. F. C., and Off-On-Bass-Phonograph Controls' Shafts)
27630		Felt Washer (Used on Rapid Station Selector Control Shaft)

APPARATUS SPECIFICATIONS

No. 260-L	50 to 60 Cycles; P-27992 Chassis; P-26170 and P-27827 Loud Speakers
No. 260-LB	25 to 60 Cycles; P-27993 Chassis; P-26170 and P-27827 Loud Speakers
No. 260-P	60 Cycles Only; P-27992 Chassis; P-26170 and P-27827 Loud Speakers; No. 7 Automatic Phonograph Unit
No. 260-PB	25 Cycles Only; P-27993 Chassis; P-26170 and P-27827 Loud Speakers; No. 7-B Automatic Phonograph Unit

MODEL 260 Series
Socket, Trimmers STROMBERG-CARLSON TEL. MFG. CO.
Parts List

REPLACEMENT PARTS

Piece Number	Schematic Circuit Designation	Part
21984		Fuse Block Assembly
22974		Tube Socket, 6 Prong
23517		Tube Socket, 7 Prong
24268		Cord, Power Supply
24314	C1	Capacitor, Type "O", 10 Mmfd.
24402	C29, C86, C87, C89, C90	Capacitor, .1 Mfd.
24405	C8, C16, C18, C28, C55, C71	Capacitor, .04 Mfd.
24569	C66, C67	Capacitor, Type "O", 50 Mmfd.
24994	C15, C65, C77	Capacitor, .05 Mfd.
25149	C33, C79, C91, C107, C108, C109	Capacitor, .01 Mfd.
25150	C68, C81	Capacitor, .02 Mfd.
25481	C78	Capacitor, .002 Mfd., 400 Volts
25483	C72, C73	Capacitor, .1 Mfd., 400 Volts
25487	C31, C88, C94	Capacitor, Type "W", .001 Mfd.
25489	C95	Capacitor, Type "W", .00125 Mfd.
25539		Tube Socket, 8 Prong
26062	R61, R67, R69	Resistor, Type "F", 10,000 Ohms
26151	C110, C112	Capacitor, .005 Mfd., 400 Volts
26178	L51	P-26170 Loud Speaker Field Coil (1050 Ohms)
26250	L48	Voice Coil and Cone Assembly (P-26170 Loud Speaker)
26250	L49	Voice Coil and Cone Assembly (P-27827 Loud Speaker)
26287		Pilot Lamp
26322	R15	Resistor, Type "E", 120 Ohms
26326	R51	Resistor, Type "E", 270 Ohms
26333	R5, R19, R20, R23, R27, R39	Resistor, Type "E", 1000 Ohms
26343	R70, R71	Resistor, Type "E", 6800 Ohms
26345	R22, R26, R28, R40, R48	Resistor, Type "E", 10,000 Ohms
26349	R10, R11, R12, R17	Resistor, Type "E", 22,000 Ohms
26353	R4, R13, R14, R25, R43, R44	Resistor, Type "E", 47,000 Ohms
26357	R1, R8, R21, R24, R49, R52	Resistor, Type "E", .1 Megohm
26362	R29, R30, R55	Resistor, Type "E", .27 Megohm
26369	R33, R35, R41, R47	Resistor, Type "E", 1 Megohm
26371	R46	Resistor, Type "E", 1.5 Megohm
26373	R38, R45	Resistor, Type "E", 2.2 Megohm
26264	R56, R57	Resistor, Type "E", 10,000 Ohms
26265	R58, R59	Resistor, Type "B", 50,000 Ohms
26285	L36, L37	Third I. F. Transformer
26286	L38, L39, L40	Fourth I. F. (Discriminator) Transformer
26301	C93	Adjustable Capacitor, High Frequency Cut-Off Filter
26325	C98, C99	Capacitor, .1 Mfd., 800 Volts
26380	R60, R62, R63, R64	Resistor, "B" Voltage Divider
26389	R66	Potentiometer, Volume Control
26405		Connector Assembly
26410		Lever Assembly
26559	C111	Capacitor, .001 Mfd., 1600 Volts

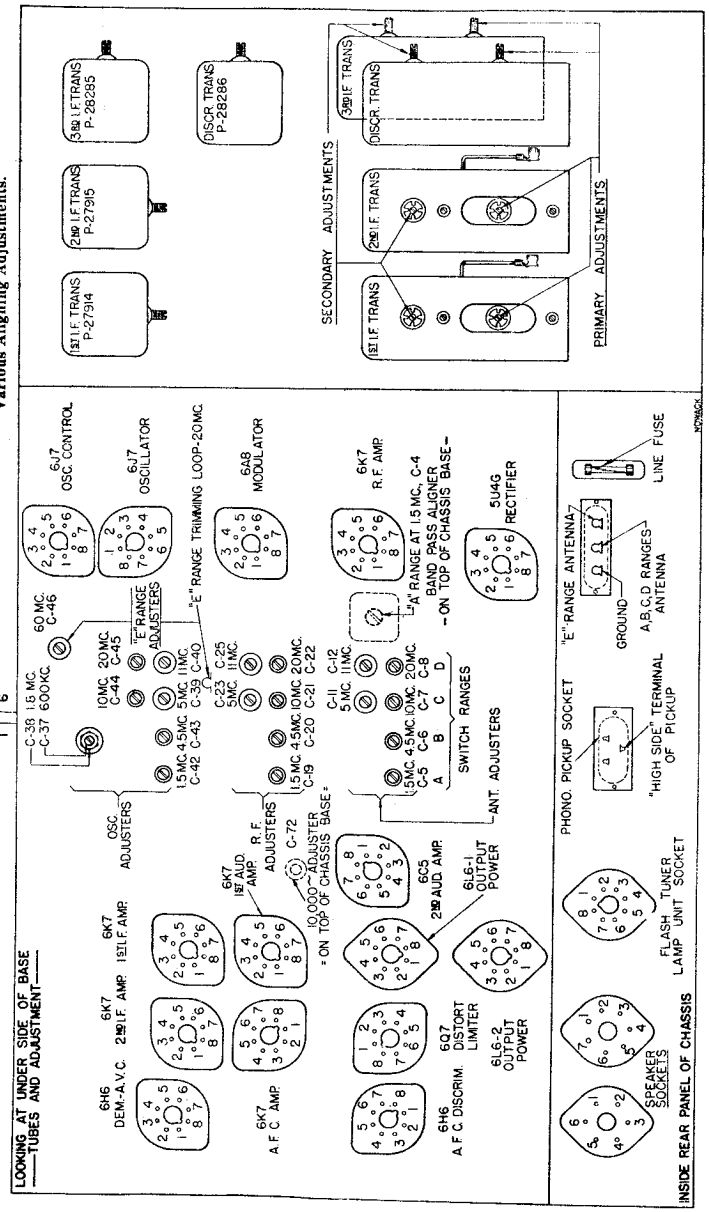

26383	R2, R3, R6	Resistor, Type "EI", .1 Megohm	27758	C26	Capacitor, Type "O", 75 Mmfd.
26417	C10	Capacitor	27761	R7	Resistor, Type "E", 620 Ohms
26677		Plug for Phonograph Pickup	27762	R9	Resistor, Type "EB", 910 Ohms
26678		Socket for Phonograph Pickup	27776		Shaft, Tone Control
26704	L52	Choke Assembly	27778		Crank Arm, I. C.
26705		Antennas and Ground Binding Posts	27779		Cap, .03 Mfd.
26761		Switch Assembly, "Off-On-Bass-Phonograph" Control	27782	C3	Capacitor, .03 Mfd.
26818		Fuse, 5 Amperes	27877	L58, L57, L58, L59, L60	Power Transformer (50 to 60 Cycles Chassis)
27008	C36	Capacitor, Type "W", .006 Mfd.	27878	L56, L57, L58, L59, L60	Power Transformer (25 to 60 Cycles Chassis)
27009	C32	Capacitor, Type "J", 500 Mmfd.	27887	C64	Crystal Detector Assembly
27013	C62	Capacitor, Type "J", 100 Mmfd.	27897	L30, L31, L33, L34	Coil and Bracket Assembly for "A" Range Antenna Transformer
27017	C17	Capacitor, Type "J", 100 Mmfd.	27898	R53	Potentiometer, Tone Fidelity Control
27108	C44, C34, C49, C60, C54, C58, C59, C60, C62, C101	Capacitor, Type "O", 200 Mmfd.	27908	L60	P-27827 Loud Speaker Field Coil (3425 Ohms)
27305	C24, C25, C41, C61, C89	Capacitor, Two, .05 Mfd.	27914	L32	First I. F. Transformer
27309	C26, C28, C31, C36, C75	Capacitor, Type "O", 50 Mmfd.	27915	L35	Second I. F. Transformer
27407	R18, R50	Fixed Capacitor, 300 Mmfd.	27916	L26, L27, L28, L29	Oscillator Transformer, "E" Range
27588	C5, C6, C7, C8, C11, C12	Resistor, Type "EB", 22,000 Ohms	27921	C46	Capacitor, Aligner, "E" Range
27589	C19, C20, C21, C22, C23, C25	Capacitors, Aligning	27988	L54	Antenna Transformer Tuning Loop, "E" Range
27592	L3, L4, L5, L6, L7	Bi-Resonator Coil "A" Range, Antenna Transformer "B" and "C" Ranges	27989	C37, C38	L. F. Aligners for "A" and "B" Range Oscillators
27593	L8, L9, L10, L11, L12, L13	"A", "B", and "C" Ranges	27994		Pilot Lamp, Socket Assembly
27594	L18, L19, L20, L21, L22, L23	Oscillator Transformer, "A", "B", and "C" Ranges	27995		Chassis Base and Shield (Oscillator Unit)
27608		Range Switch Assembly	28002	C27, C82, C96, C97	Capacitor, Type "O", 200 Mmfd.
27638	L1, L2	Antenna Transformer, "A" Range	28005	C70, C80, C84	Capacitor, .25 Mfd., 150 Volts
27643	L16, L17	Antenna Transformer, "D" Range	28006	R16, R68	Resistor, Type "E", 1 Ohms
27644	L14, L15	R. F. Transformer, "D" Range	28031	C39, C40, C42, C43, C44, C45	Cable Assembly, Phonograph Switch to Pickup Socket
27645	L24, L25	Oscillator Transformer, "D" Range	28186	R31, R54	Resistor, Type "EB", .39 Megohm
27710	C9, C13, C30, C47	Gang Tuning Capacitor, "D" Range	28187	R34, R36, R37	Resistor, Type "EB", .47 Megohm
27715		Coupling Assembly (Tuning Drive)	28189	R32	Resistor, Type "EB", .68 Megohm
27720		Gear and Bracket Assembly	28224		High Frequency Cut-Off Filter Assembly
27731		Drive Assembly	28231	L41	Second I. F. Transformer Coil Assembly
27732		Mask Assembly	28256	L42, L43, L44, L45, L46, L47	Audio Input and Output Transformer Assembly
27733		Lever Assembly, Mask Actuator	28257	C104, C105	Electrolytic Capacitor, 8 Mfd., 500 Volts
27735		Rod	28258	C103	Electrolytic Capacitor, 16 Mfd., 500 Volts
27737		Indicator Frame Assembly	28259	C102	Electrolytic Capacitor, 16 Mfd., 300 Volts
27746		Dial	28339	C100, C101	Electrolytic Capacitor, 4 Mfd., 500 Volts
27751		Tube Socket, 8 Prong	28390	C83, C85, C92, C106	Electrolytic Capacitor, 4 Mfd., 100 Volts; 4 Mfd., 200 Volts; 12 Mfd., 20 Volts; 12 Mfd., 50 Volts

©John F. Rider, Publisher

MODELS CQ-69,DQ-69
Schematic,Data

L. TATRO PRODUCTS CORP.

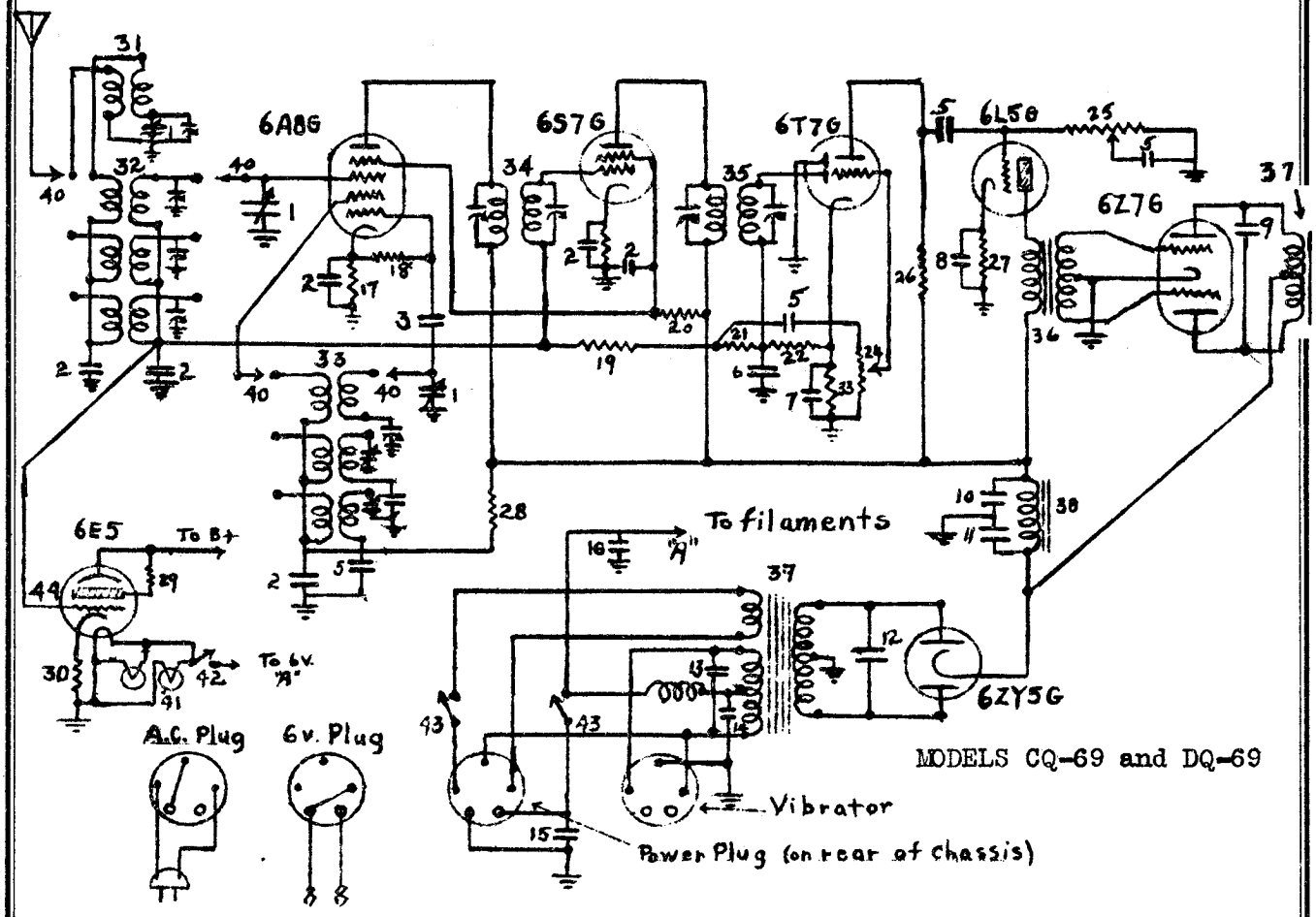

MODELS CQ-69 and DQ-69

1	Gang condenser	16	.25 mfd.	31	Preselector coil
2	.10 mfd.	17	400 ohms	32	Antenna coil
3	.00025 mfd	18	25M ohms	33	Oscillator coil
4	.002 mfd.	19	1 megohm	34	Iron core I.F.
5	.01 mfd.	20	50M ohm	35	I.F. coil
6	.00025 mfd.	21	25M ohm	36	Input trans.
7	10 mfd. electr.	22	½ megohm	37	Speaker
8	5 mfd. electr.	23	5M ohms	38	Filter choke
9	.0025 mfd.	24	½ meg. control	39	Power trans.
10	8 mfd. electr.	25	Tone control	40	Band switch
11	16 mfd. electr.	26	¼ megohm	41	Pilot lights
12	.005 mfd. 1600 v.	27	1500 ohms	42	Tuning eye and dialite switch
13	10 mfd. electr.	28	10M ohms		
14	.5 mfd.	29	½ megohm	43	Power switch
15	.10 mfd.	30	1500 ohms	44	Tuning eye

The DQ-69 is a console model; the CQ-69 is a table model. The antenna should be as high as possible and about 100 feet long. A good ground is essentaal for good reception. The blue wire from the set is the antenna lead. If the set is to be operated on 110 volts continuously, the vibrator should be removed.

©John F. Rider, Publisher

MODELS CQ-69,DQ-69
Alignment,Socket
Voltage

L. TATRO PRODUCTS CORP.

MODELS CQ-69 and DQ-69

-- VOLTAGES --

Plates 6A8G,6S7G,6L5G, 6Z7G and oscillator grid of 6A8G ...	140 v.
Plate 6T7G	12 v.
Screens 6A8G and 6S7G	40 v.
Cathodes: 6A8G and 6S7G	1.5 v.
6T7G	.5 v.
6L5G	5 v.

Voltages when set is on AC are higher.

Knob arrangement

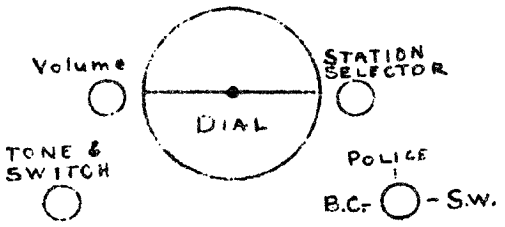

MODELS CQ-69 and DQ-69

Model CQ-69 (table model) and DQ-69 (Console) may be operated on either 6 volts DC or 110 volts AC. A separate cord is provided for each voltage. A nonsynchronous vibrator in conjunction with a type 6ZY5G rectifier furnishes high voltage. The vibrator should be removed if the set is to be operated on 110 volts continuously.

--- ALIGNMENT PROCEDURE---

Turn dial to closed gang position to make certain that the dial needle coincides with the end of the scale. Turn dial to about midpoint and adjust the I.F. coils to 456 KC.

Switch to shortwave band, set dial needle to 15 MC and adjust bottom trimmers in antenna and oscillator coils to maximum output.

Switch to police band (middle band) set dial at 5 MC and adjust the second trimmers from the bottom to maximum output.

Switch to broadcast, set dial at 1400 KC and adjust the third trimmers from the bottom. Then adjust the ladder located on the front section of the gang condenser. Turn to 600 KC and adjust the tor trimmer in the oscillator coil. This is the scrics tracking condenser.

The type 6A8G tube has been found to give better oscillator performance then the 6D8G and is used in present production. The switch which turns the tuning eye and dialites off and on is located on the back of the ranel.

Chassis layout DQ-69

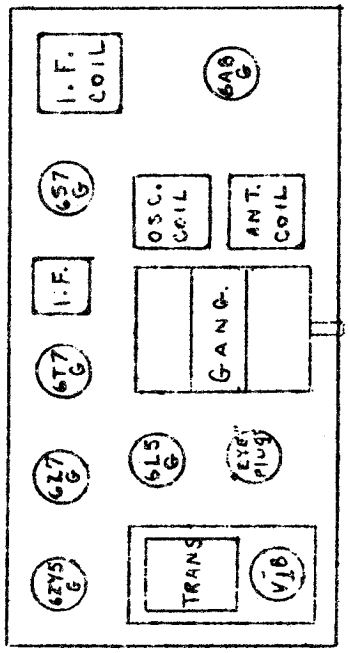

Chassis layout CQ-69

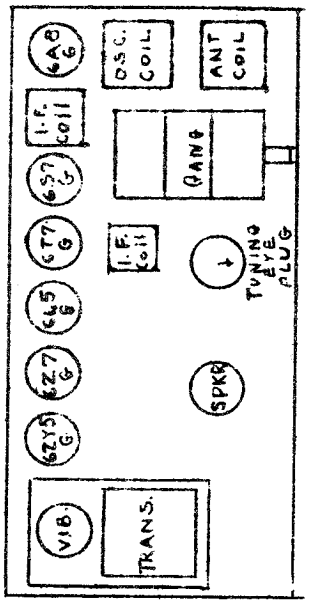

©John F. Rider, Publisher

MODELS TC1, TC2
Schematic, Coils

TRANSFORMER CORP. OF AMER.

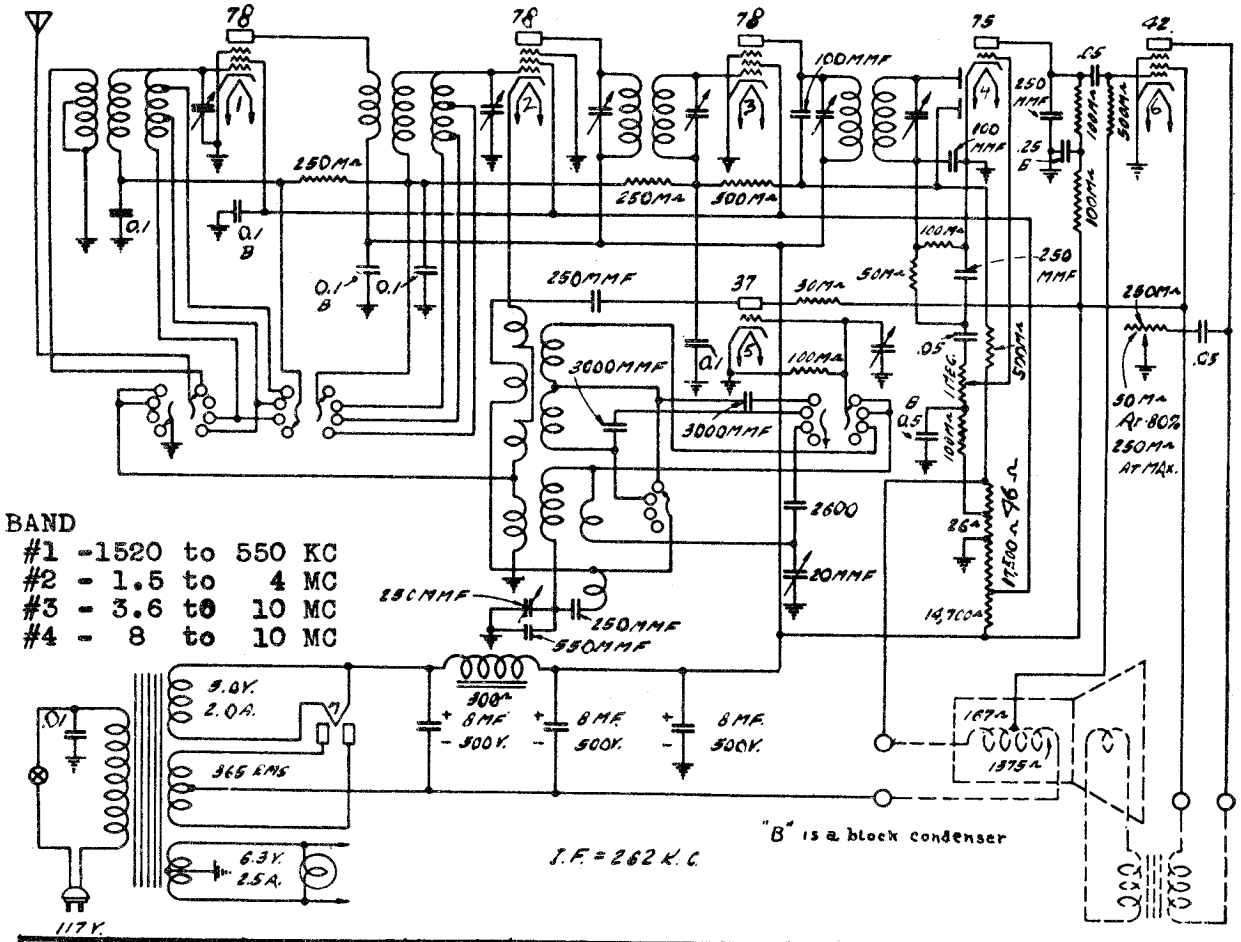

BAND
#1 -1520 to 550 KC
#2 - 1.5 to 4 MC
#3 - 3.6 to 10 MC
#4 - 8 to 10 MC

INTERNAL CONNECTIONS OF R. F. and I. F. TRANSFORMERS

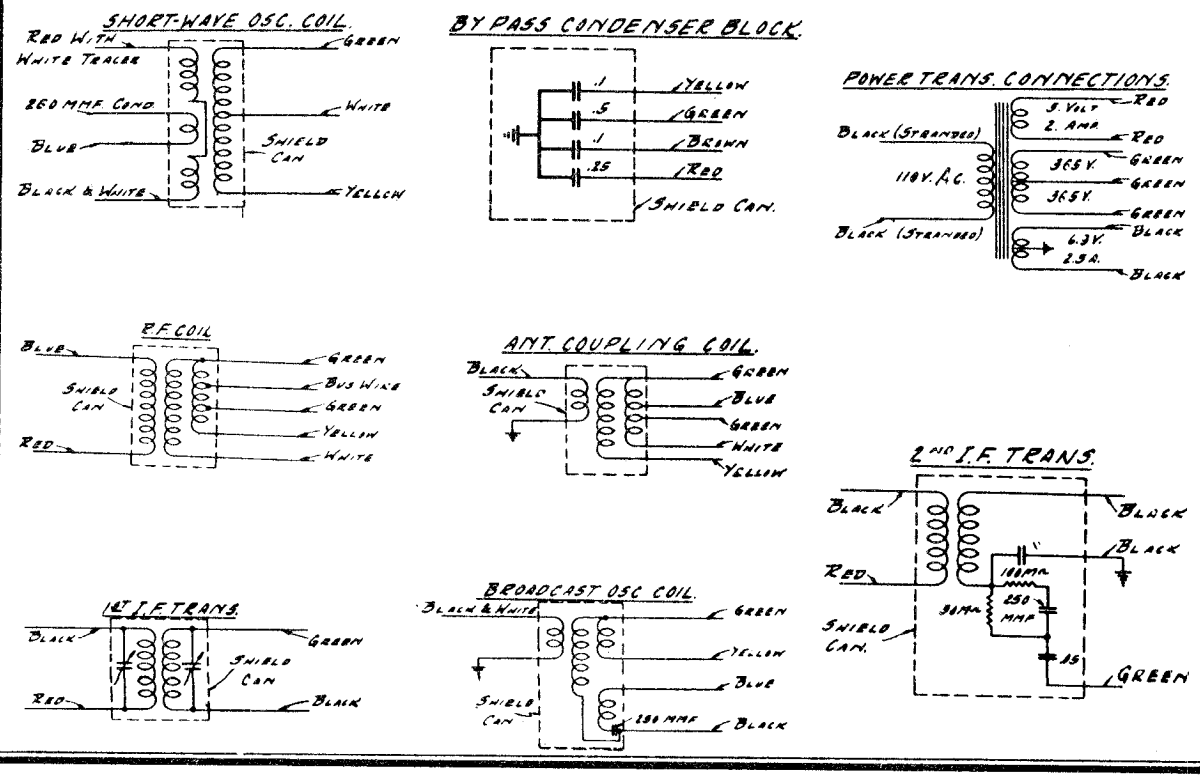

©John F. Rider, Publisher

MODELS TC1, TC2
Alignment, Voltage
Notes, Parts

TRANSFORMER CORP. OF AMER.

SERVICE NOTES FOR MODELS TC1 AND TC2

The Clarion TC-1 TC2 is a 7 tube all-wave super-heterodyne receiver, covering broadcast frequencies 550-1520 kilocycles and short-wave frequencies 1.5-4 megacycles, 3.6-10 megacycles, 8-10 megacycles.

Other outstanding features of this receiver are:—78 triple grid super-control tubes in the R. F. first detector and I. F. stages; 37 oscillator; 75 double diode triode, operating as a delayed AVC, second detector and first audio; and the 42 super-power amplifier, delivering 3 watts of undistorted output to the speaker.

R. F. and I. F. ALIGNMENT. The trimmer on the tuning condensers and the intermediate stages are very accurately adjusted before the receiver leaves the factory and should need little or no attention. To check adjustments the following procedure should be followed:

The action of the automatic volume control will defeat the purpose of an output meter. To overcome this, it will become necessary to reduce the coupling between the oscillator and the receiver so that only a small reading is obtained on the output meter with the volume control set for maximum volume. This will allow the output meter to work correctly. Adjust the test oscillator to 262 kilocycles and couple to the control grid of No. 2 tube and adjust trimmers on I. F. stage for maximum reading on the output meter.

R. F. ALIGNMENT. Couple oscillator to the antenna (reduce coupling as outlined in I. F. adjustment). Set pointer on tuning chart to 1400 kilocycles with wave band control switch in broadcast position. Adjust test oscillator to 1400 kilocycles. Adjust trimmers on No. 1 and 2 section of tuning condenser for maximum reading. The trimmer of No. 3 section of the tuning condenser should be set for minimum capacity, and the high frequency trimmer on back of chassis (left viewing chassis from back) should be adjusted for maximum reading. This operation should be repeated at 600 kilocycles and adjusting only the low frequency trimmer on back of chassis (right viewing chassis from back) for maximum reading. No adjustments are necessary on the short-wave band. All the coils are correctly matched so that they will be in perfect alignment if all the above adjustments are correctly made.

REPLACEMENT PARTS

(PRICES SUBJECT TO CHANGE WITHOUT NOTICE)

Stock No.	DESCRIPTION	List Price	Stock No.	DESCRIPTION	List Price
TOT 10840	Volume control	$0.70	TOT 9370	6 prong socket No. 42	.10
" 10830	Tone control and A.C. switch	1.00	" 10280	6 prong socket No. 75	.10
" 10630	Short wave switch	2.95	" 9360	4 prong socket No. 80	.10
" 10620	Tuning condenser for sets with full vision dial	3.20	" 10980	Tube shield base	.05
" 12730	Tuning condenser for sets with airplane dial	3.40	" 10970	Tube shield cap	.10
" 10590	Filter choke	1.15	" 10960	Tube shield	.15
" 9340	A. C. cord	.30	" 10660	8" speaker	9.35
" 10920	Pilot light socket	.15	" 10610	Power transformer	3.40
" 5800	.05—200 volt condenser	.10	" 10140	8-8, 450V filter condenser	2.10
" 5630	.05—400 volt condenser	.15	" 10850	8—450 filter condenser	1.25
" 5720	.1—200 volt condenser	.15	" 11750	1st IF transformer	1.55
" 10880	100 mmf condenser	.15	" 11760	2nd IF transformer	1.80
" 5900	250 mmf condenser	.15	" 10600	Bypass condenser block	1.20
" 11070	550 mmf condenser	.20	" 10820	Double padder condenser	.40
" 11050	2600 mmf condenser	.35	" 5680	.01—400 volt condenser	.15
" 11060	3000 mmf condenser	.40	" 11040	Dial—Complete full vision	1.20
" 6310	50,000 ohm resistor—1/5 watt	.15	" 11790	Antenna coil	.50
" 6030	100,000 ohm resistor—1/5 watt	.15	" 11810	Detector coil	.50
" 6020	250,000 ohm resistor—1/5 watt	.15	" 11820	Broadcast oscillator coil	.50
" 6150	500,000 ohm resistor—1/5 watt	.15	" 11840	Short wave oscillator coil	.50
" 10870	30,000 ohm resistor—1 watt	.15	" 12740	Escutcheon plate—Airplane dial	.40
" 11010	Cabinet for full vision dial	7.00	" 12750	Pyralin escutcheon window	.20
" 5310	Knobs	.05	" 12030	Drive cable spring	.10
" 11360	Escutcheon plate for full vision dial	.40	" 12090	Dial chart	.10
" 12820	Cabinet—airplane dial	7.20	" 11990	Dial pointer	.05
" 9390	6 prong socket No. 78	.10	" 12770	Dial drive cable	.05
" 10860	5 prong socket No. 37	.10			

TUBE SOCKET VOLTAGES

Tube No.	Heater to Cathode Voltage	Control Grid to Cathode Voltage	Screen to Cathode Voltage	Plate to Cathode Voltage	Plate MA	Heater or Fil. Voltage
1—R. F.	0	4.5*	100	250	6.0	6.3
2—1st Det.	0	4.5*	100	250	6.0	6.3
3—I. F.	0	4.5*	100	250	6.0	6.3
4—2nd Det. AVC	0	2.0**	0	125	75	6.3
5—Osc.	0	2.6	0	95	5.5	6.3
6—Audio	0	20.0	250	225	31.0	6.3
7—Rect.	0				32 per plate	5.0

Voltage reading taken with 1000 ohm per volt meter using test prods. All tubes in sockets, Ant. ground to chassis, no signal.
*Voltage from ground to terminal No. 1 ON THE VOLTAGE DIVIDER.
**Voltage from ground to terminal No. 2 ON THE VOLTAGE DIVIDER.

©John F. Rider, Publisher

TRANSFORMER CORP. OF AMER.

MODELS TC22, TC23
Schematic

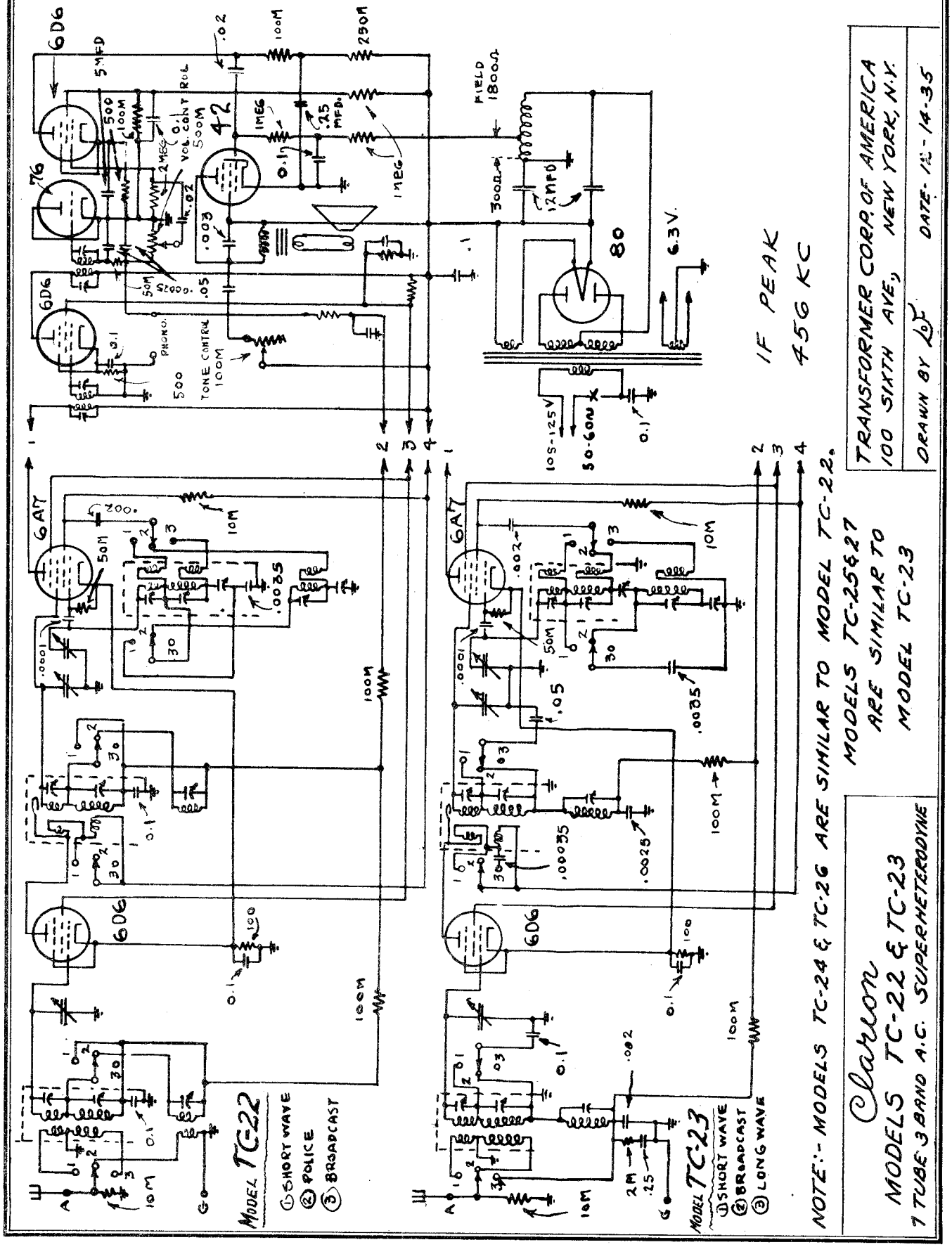

NOTE:- MODELS TC-24 & TC-26 ARE SIMILAR TO MODEL TC-22.
MODELS TC-25 & 27 ARE SIMILAR TO MODEL TC-23

Clarion
MODELS TC-22 & TC-23
7 TUBE 3 BAND A.C. SUPERHETERODYNE

TRANSFORMER CORP. OF AMERICA
100 SIXTH AVE., NEW YORK, N.Y.
DRAWN BY LD DATE- 12-14-35

©John F. Rider, Publisher

MODELS TC36A, TC36LW
Schematic

TRANSFORMER CORP. OF AMER.

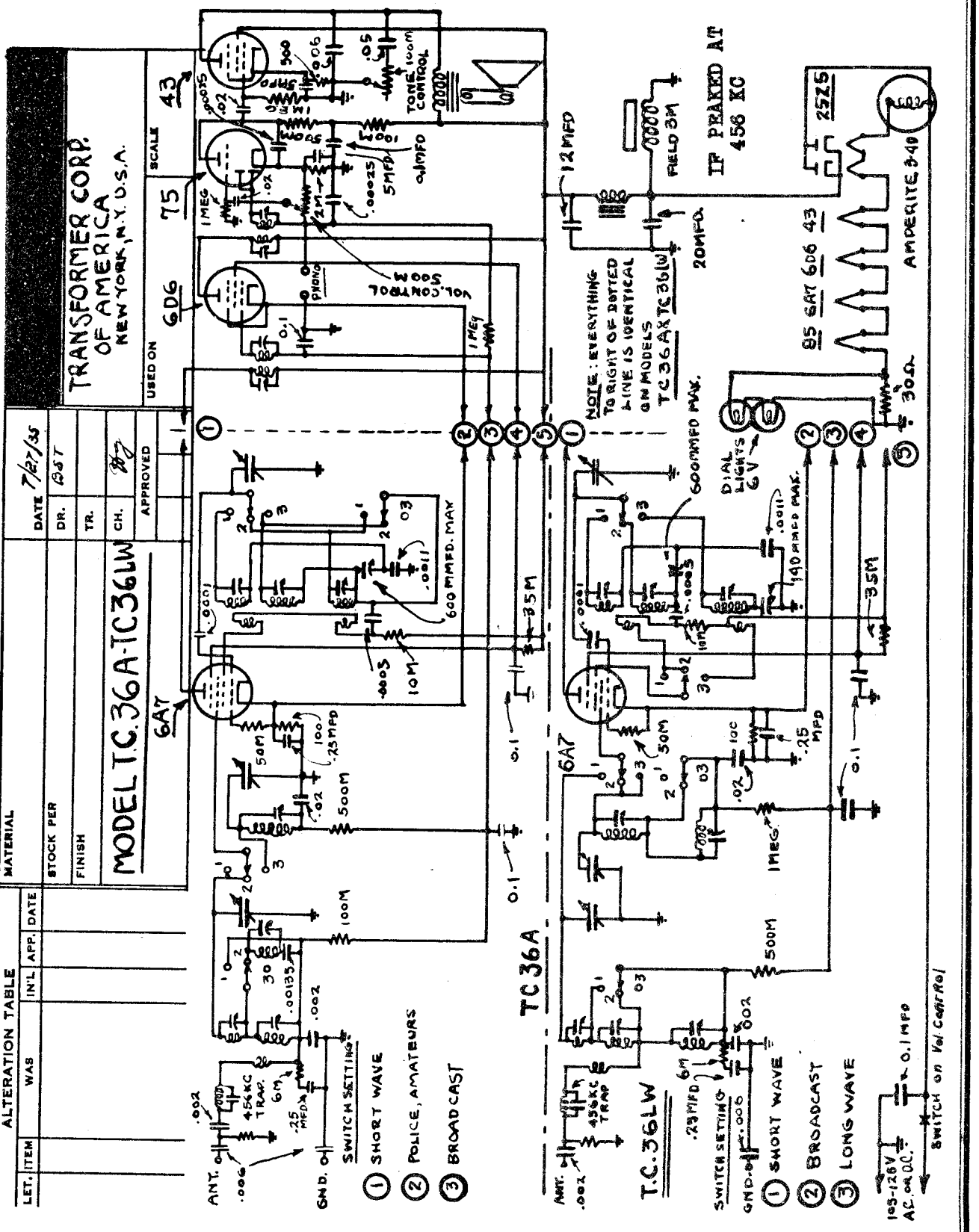

©John F. Rider, Publisher

MODEL TC37
Schematic

TRANSFORMER CORP. OF AMER.

Eight Tube Superheterodyne Receiver
A.C. or D.C. 105-125 Volts
(Also available for other voltages)

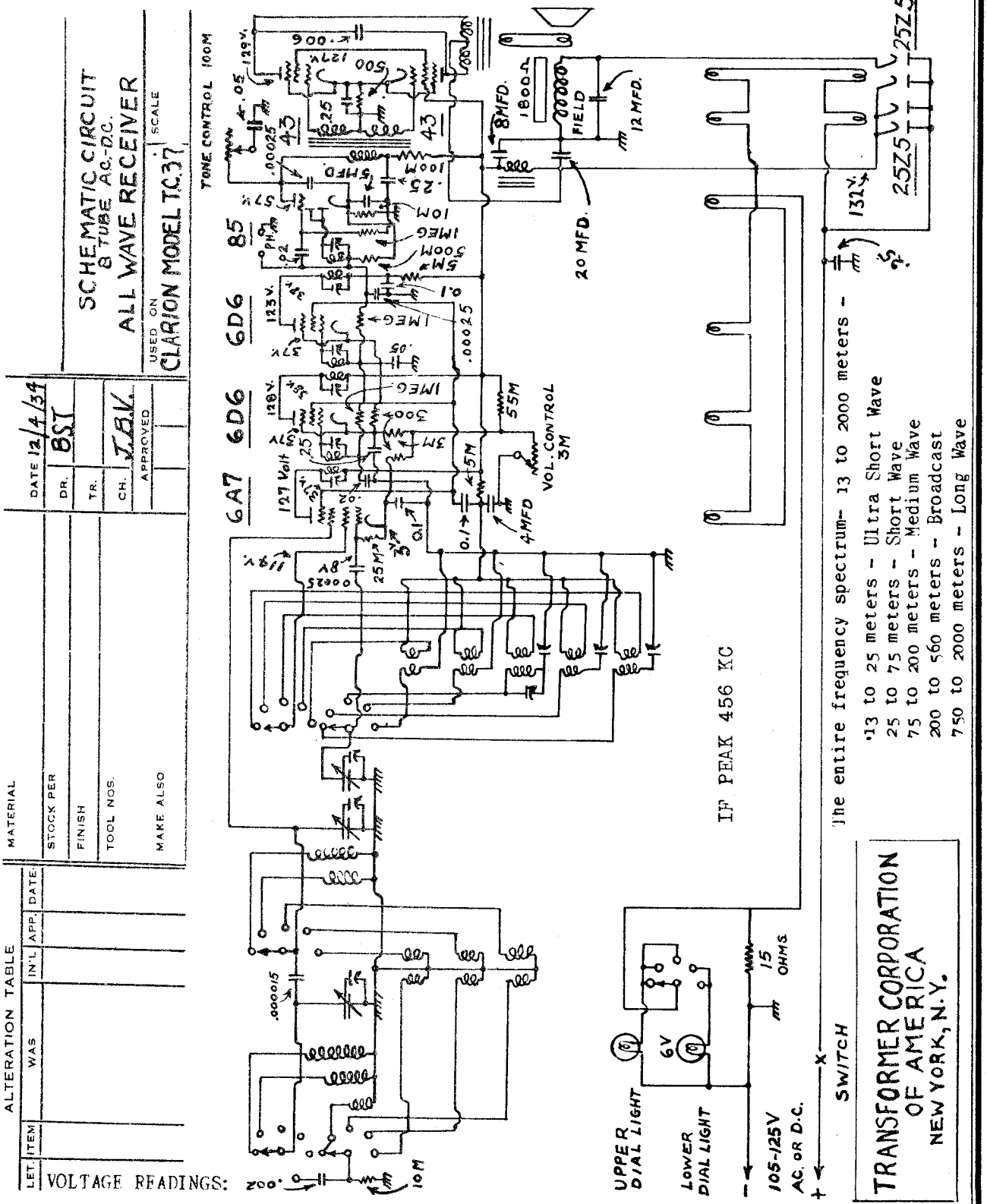

Readings should be taken with volume control fully on. Use a D.C. Voltmeter having a resistance of 1000 ohms per volt.

©John F. Rider, Publisher

MODEL TC38
Schematic

TRANSFORMER CORP. OF AMER.

A.C. or D.C. 105-125 Volts 25-60 Cycles
(Also available for voltages to 240)

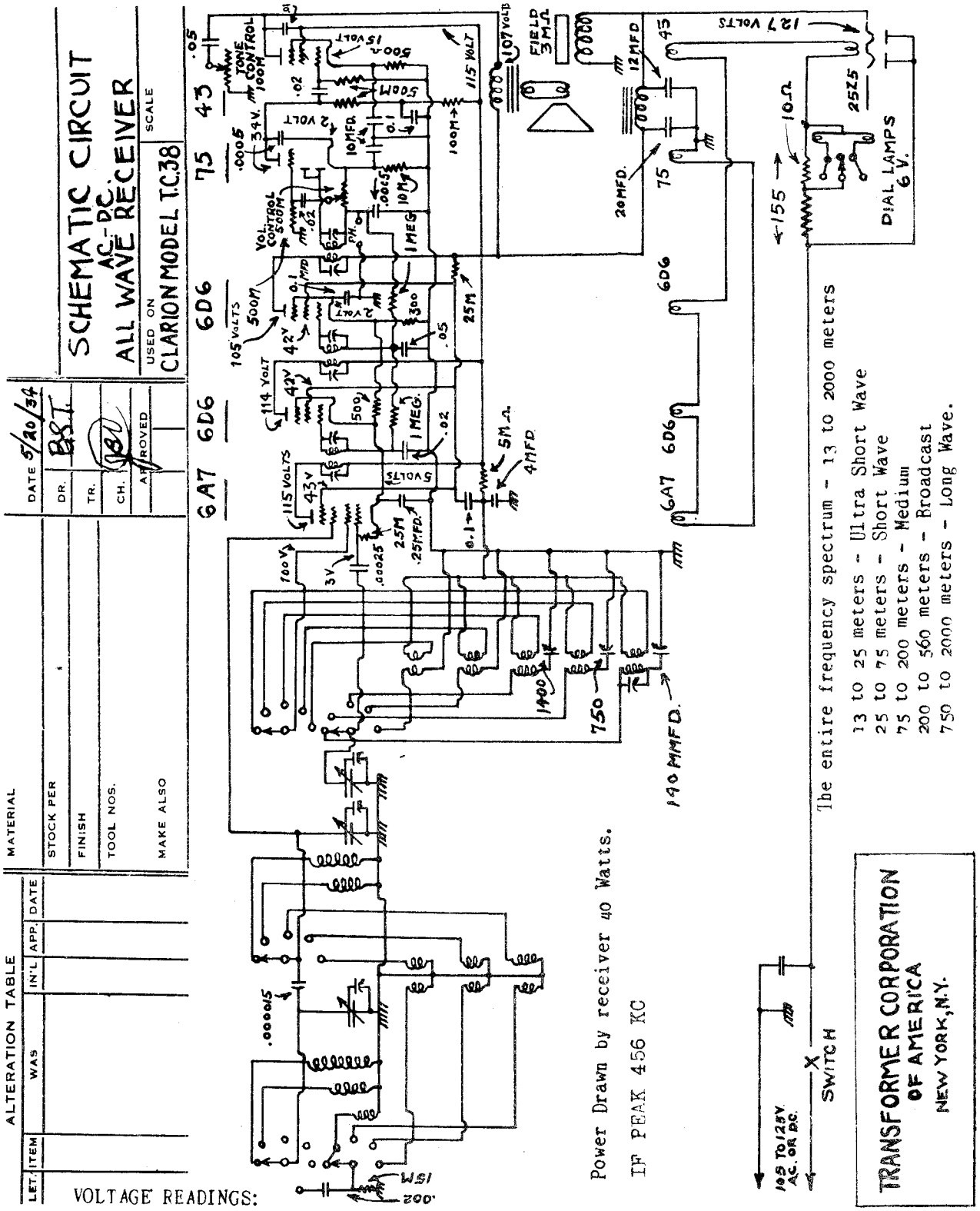

VOLTAGE READINGS:

Readings should be taken with volume control fully on. Use a D.C. Voltmeter having a resistance of 1000 ohms per volt.

©John F. Rider, Publisher

MODELS TC39A, TC39LW
Schematic

TRANSFORMER CORP. OF AMER.

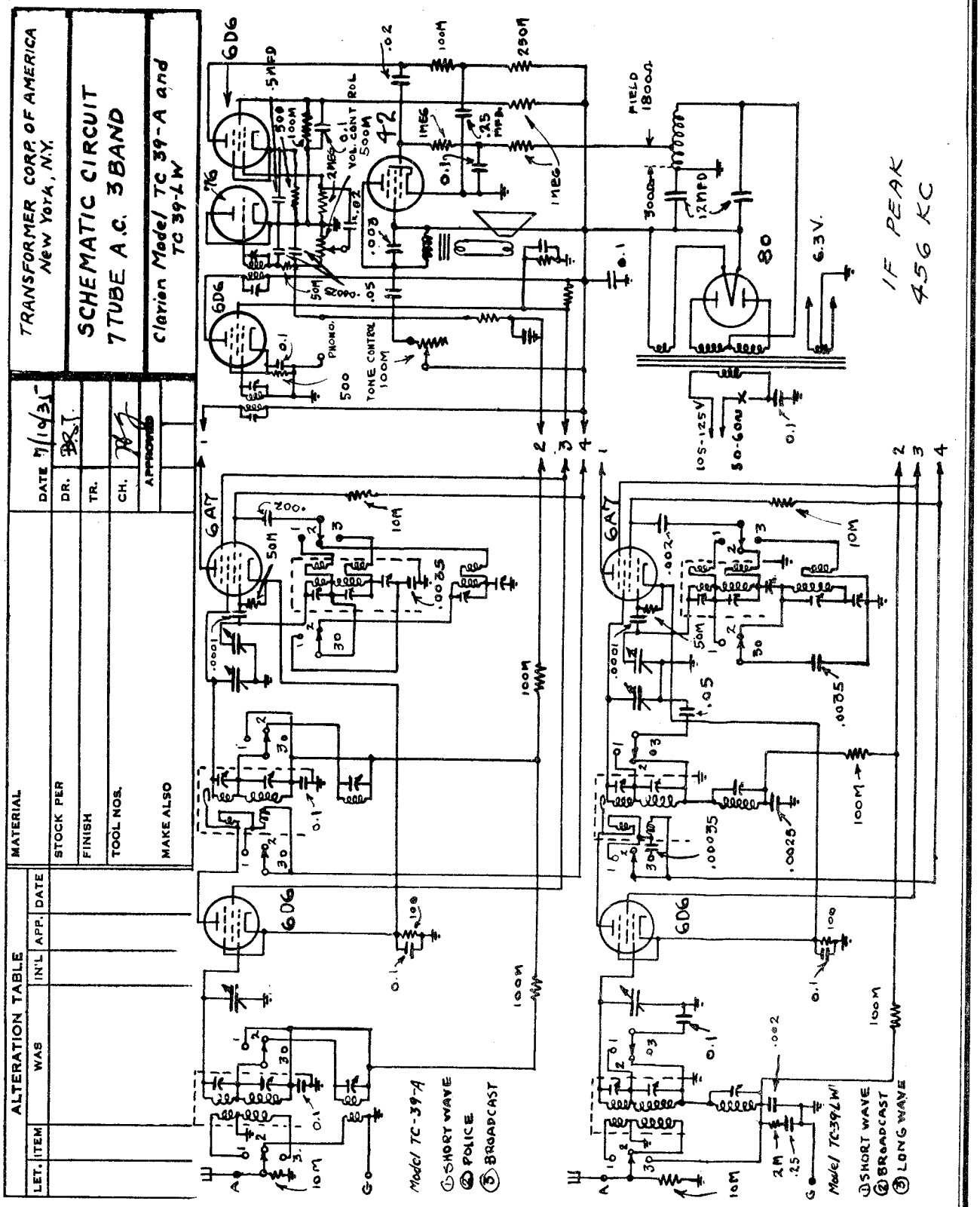

©John F. Rider, Publisher

MODEL TC53A
Schematic

TRANSFORMER CORP. OF AMER.

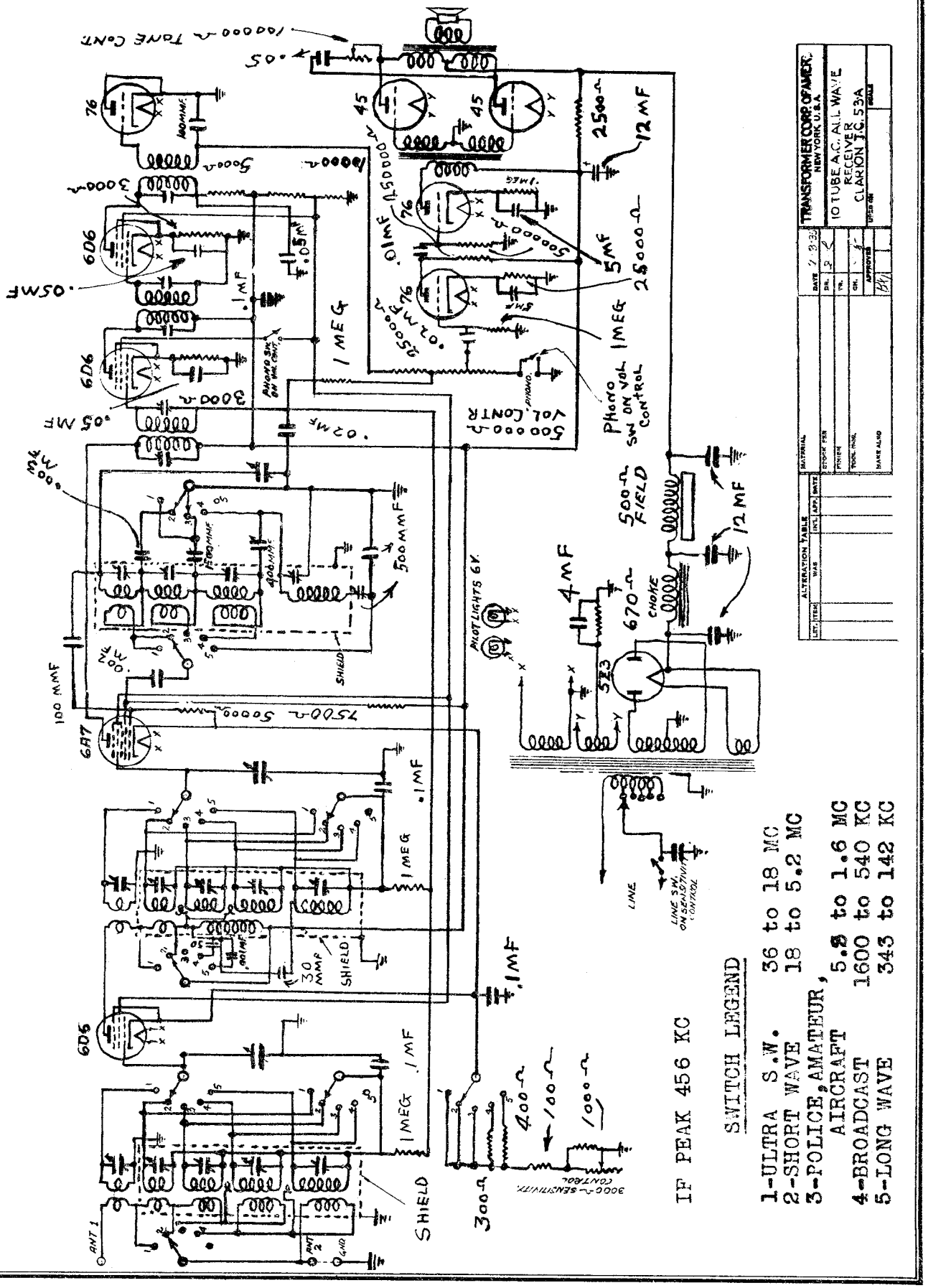

©John F. Rider, Publisher

TRAV-LER RADIO & TELEV. CORP.

MODEL 131
Schematic, Socket
Trimmers, Parts

This radio is an eleven-tube Supersheterodyne type which operates on AC current only at a frequency of 60 cycles and at 110 volts.

1. Meg. ½ W.	R9,R10	.10
6M^{W} ½ W.	R11	.10
15M^{W} 2W.	R12	.30
20M^{W} ½ W.	R13	.10
2 Meg. ½ W.	R14	.10
.5 Meg. ½ W.	R19,R23	.10
30 MW ½ W.	R20	.10
250^{W} 2 W.	R24	.30

Cabinet		40.00
Misc Condenser .0014 M.F.	C7	.20
" " .0001 M.F.	C4,C12,C13	.15
Tubular Condenser .05 M.F. 200 V.	C1,C10,C11	.10
" " "	C19	.10
" " .1 M.F. 200 V.	C2,C3,C5	.10
" " " "	C9	.10
" " " 400 V.	C8,C15,C16	.15
" " " "	C18,C21	.15
" " .01 M.F. "	C14	.15
" " .002 M.F. " 1000 V.	C17	.20
" " .25 M.F. 400 V.	C23,C24	.25
" " 10 M.F. 25 V.	C20	.25
	C22	.80
Fixed Resistor 100M^{W} ½ W.	R1,R18,R21	.10
" " 1000^{W} ½ W.	R2,R16	.10
" " 300^{W} ½ W.	R3,R15	.10
" " 50M^{W} ½ W.	R4,R22	.10
" " 12M^{W} ½ W.	R5	.15
" " 2M^{W} ½ W.	R6	.10
" " 500^{W} ½ W.	R7	.10
" " .25 Meg. ½ W.	R8,R17	.10

11-Tube Superheterodyne AC Receiver

For use on 110 volts AC only

REPLACEMENT PARTS LIST

IN ORDERING ALWAYS STATE MODEL, DESCRIPTION & PART NO.

PART #	DESCRIPTION	LETTER	LIST PRICE
5514-A	Antenna Coil - Broadcast	T1	.75
5515-A	" " Police	T2	.60
5516-A	" " Short Wave	T3	.75
5505-A	R.F. Coil	T4	.65
5504-B	Osc. Coil	T5	1.80
5709-A	1st. I.F. Coil	T6	1.50
5705-B	2nd. I.F. Coil	T7	1.10
5904-A	Power Transformer	T8	5.00
5209-A	Tuning Condenser	C	4.00
3010-A	Loud Speaker	S	10.00
4112-A	Volume Control & Switch	V.C. & S1	1.05
4113-A	Tone Control	T.C.	.85
4608-A	High Fidelity Switch	S2	.75
4609A	Band Switch	S3	1.70
4451-K	Pilot Bulb		.15
4556-D	Line Cord		.30
4804-C	Filter Condenser	C25,C28	.70
6305-A	Padder Condenser	C6	.45
6505-A	Dial (Complete)		6.50

Standard broadcast band 540 - 1760 kc.
Police and Amateur band 1760 - 5500 kc.
Short-wave, American & Foreign 18 - 5.6 mg.

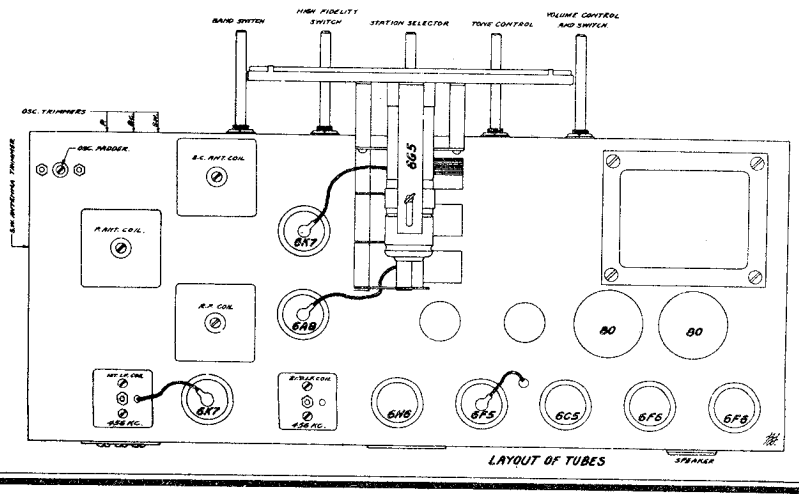

LAYOUT OF TUBES

©John F. Rider, Publisher

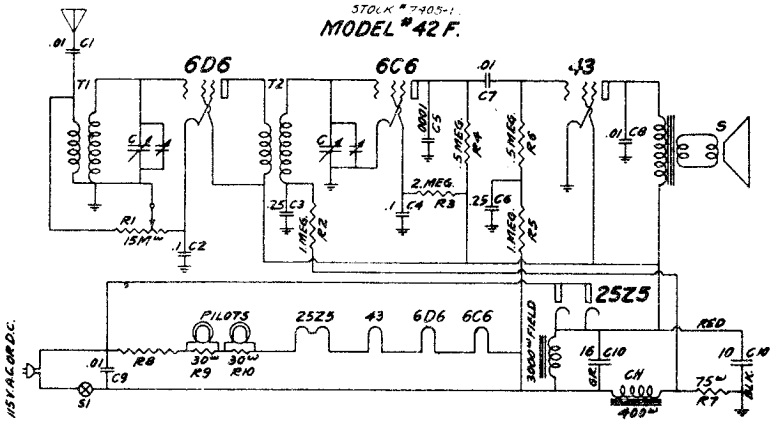

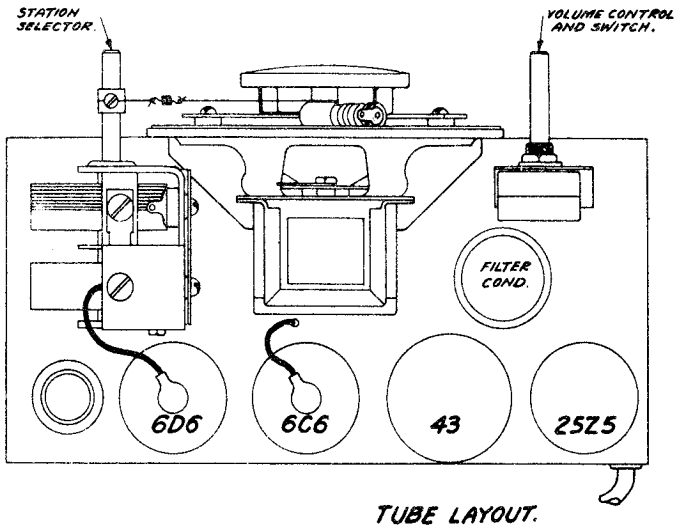

TUBE LAYOUT.

FOR
AIR CHIEF

4-Tube AC-DC Receiver
For Use on 110-115 Volts AC or DC Current Only

This receiver is a four-tube tuned-radio-frequency type which operates on either AC or DC current. It will provide very satisfactory entertainment for those who desire a small set.

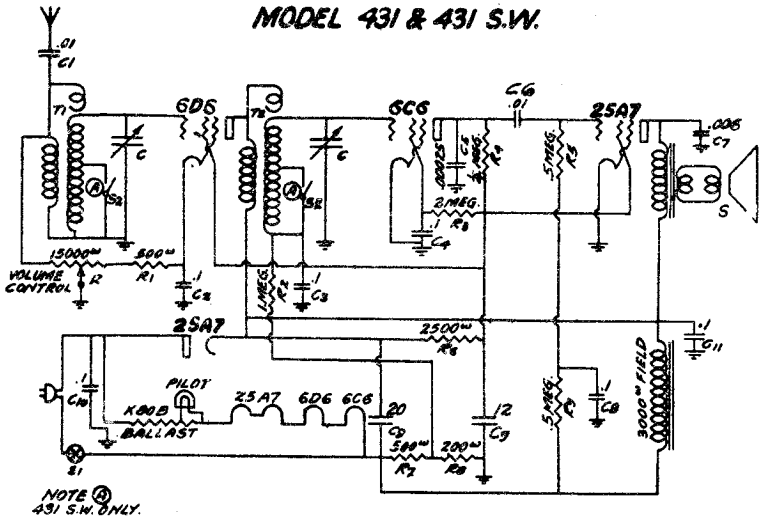

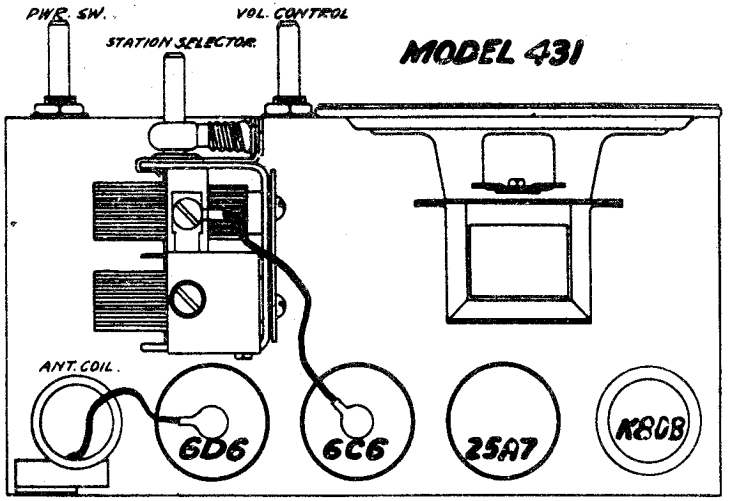

TUBE LAYOUT

4-Tube AC-DC Receiver

For Use on 110-115 Volts AC or DC Current Only

This receiver is a four-tube tuned-radio-frequency type which operates on either AC or DC current. It will provide very satisfactory entertainment for those who desire a small set.

©John F. Rider, Publisher

TROY RADIO MFG. CO.

MODEL 79
MODEL 825
Schematics, Socket

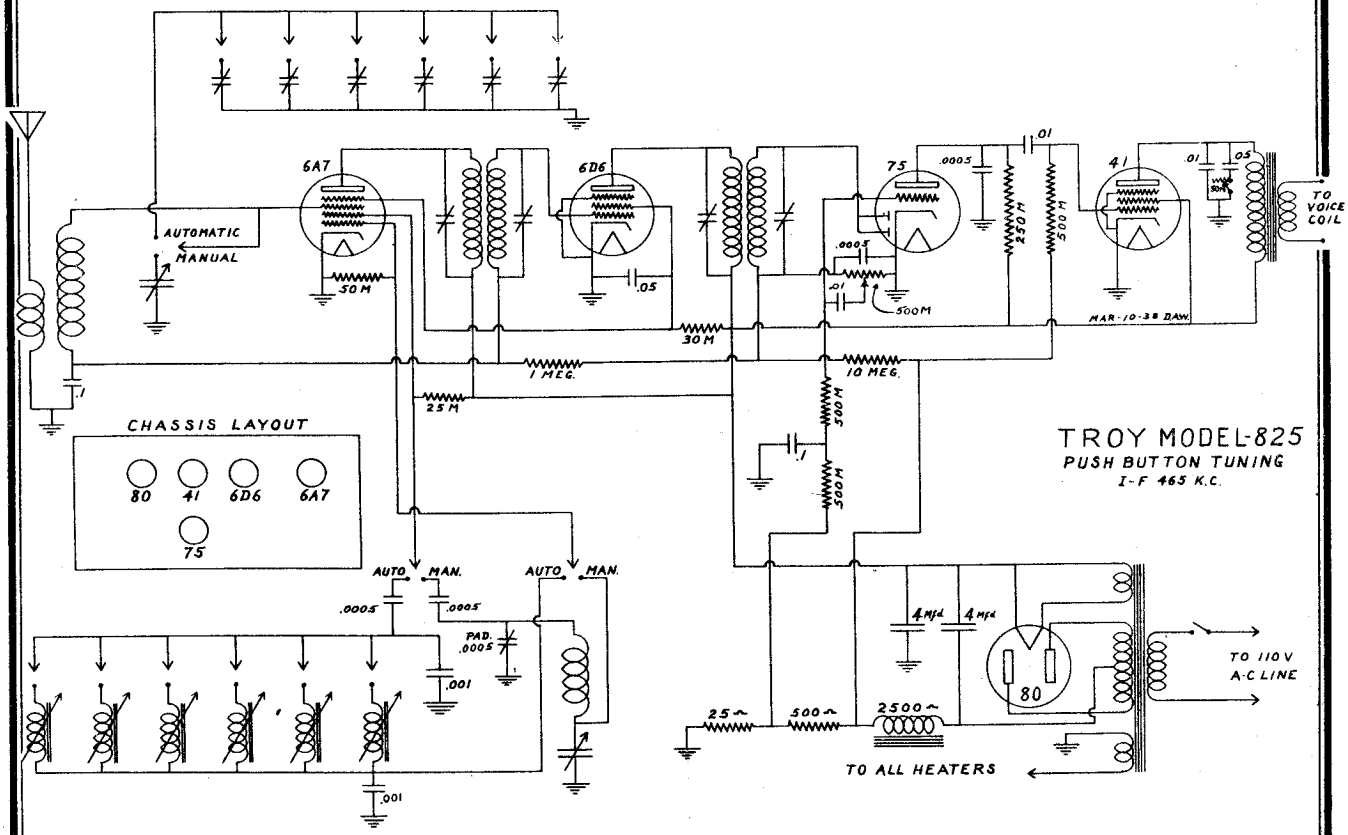

TROY MODEL-825
PUSH BUTTON TUNING
I-F 465 K.C.

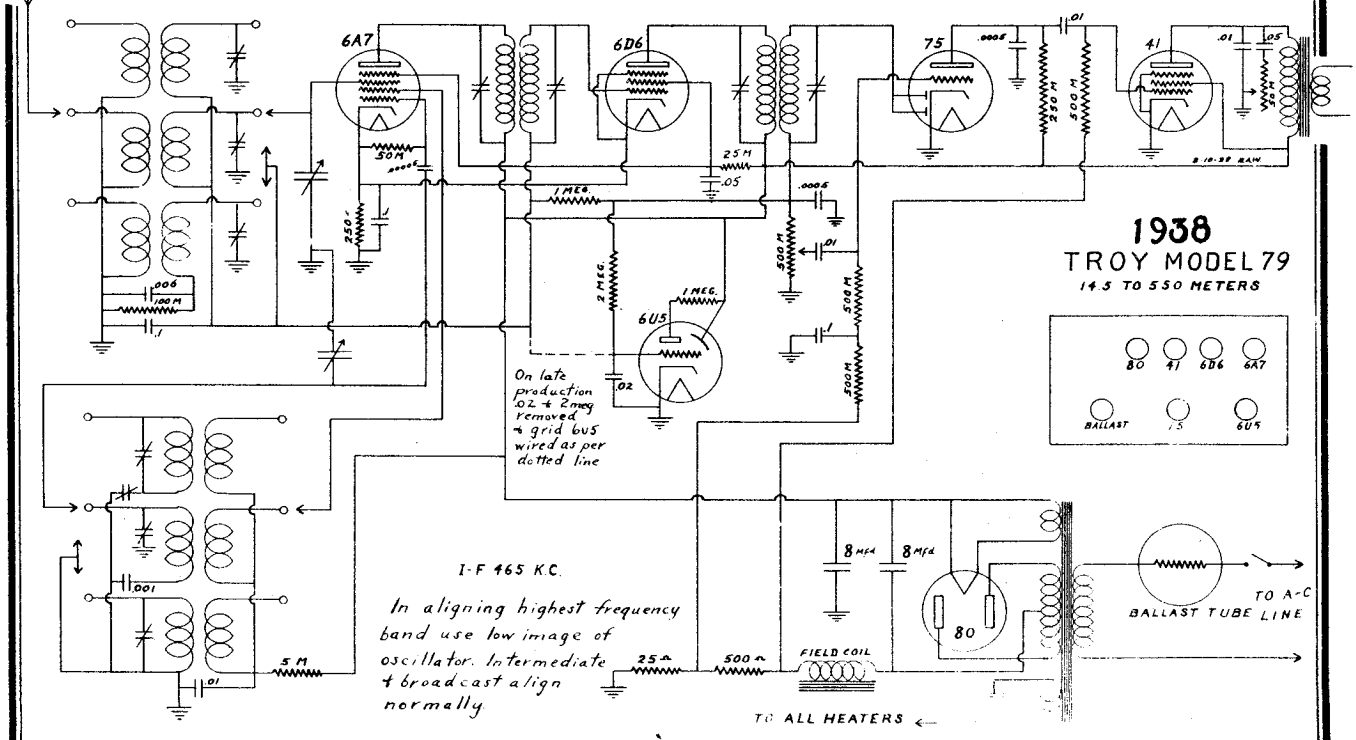

1938
TROY MODEL 79
14.5 TO 550 METERS

On late production .02 & 2 meg removed & grid 6U5 wired as per dotted line

I-F 465 K.C.

In aligning highest frequency band use low image of oscillator. Intermediate & broadcast align normally

©John F. Rider, Publisher

MODEL 170
Schematic,Socket

TROY RADIO MFG. CO.

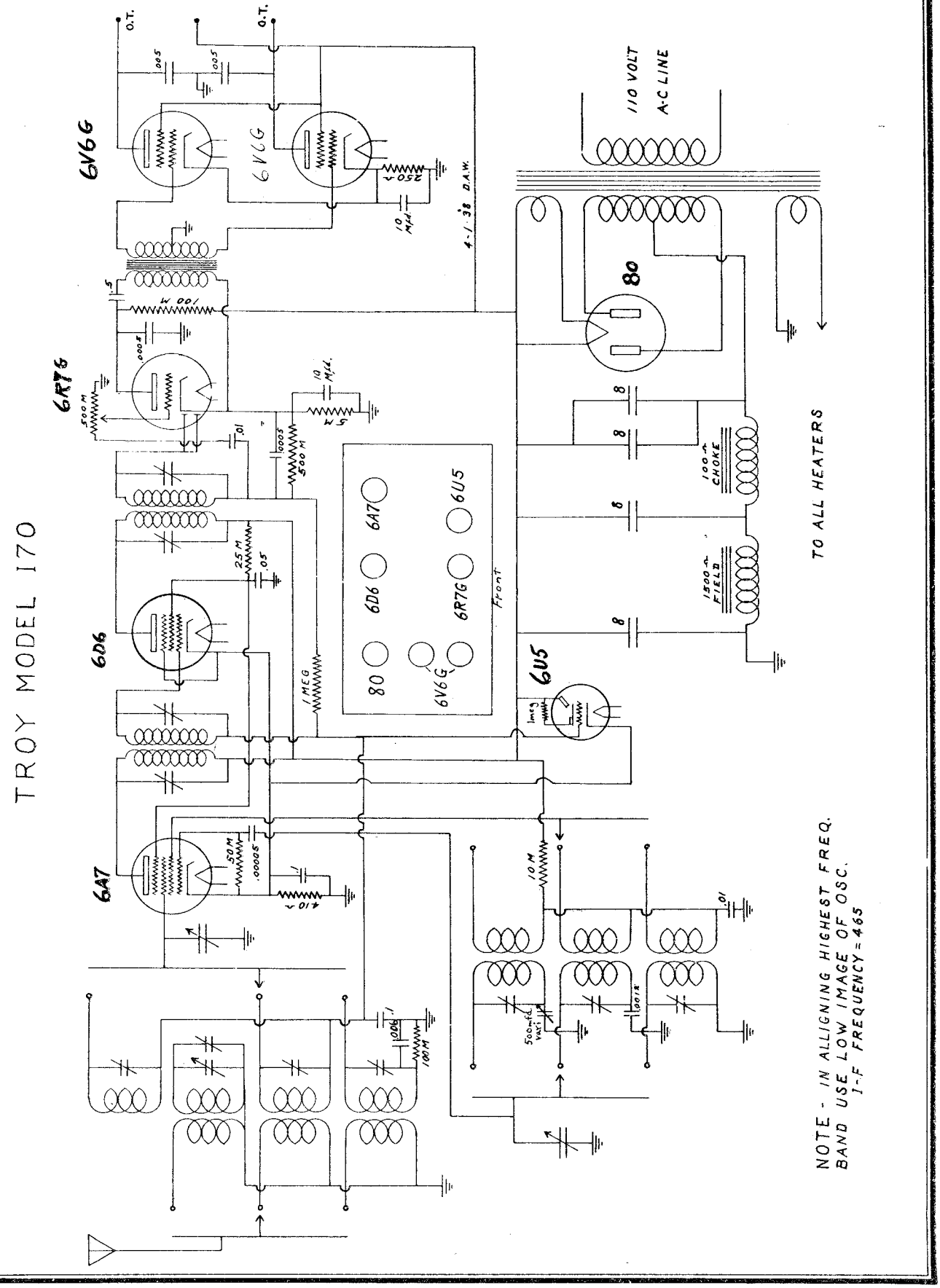

NOTE - IN ALLIGNING HIGHEST FREQ. BAND USE LOW IMAGE OF OSC. I-F FREQUENCY = 465

©John F. Rider, Publisher

ULTRAMAR MFG. CORP.

MODELS 307,317
Schematic, Socket
Trimmers, Alignments

MODEL 307

BAND		FREQUENCY COVERAGE.
A	- SHORT WAVE -	13.6-52 METERS.
B	- MEDIUM WAVE -	1730-6000 K. C.
C	- BROADCAST -	527-1750 K. C.

MODEL 317

BAND		FREQUENCY COVERAGE.
A	- SHORT WAVE -	13.6-52 METERS.
B	- BROADCAST -	527-1750 K. C.
C	- LONG WAVE -	800-2000 METERS.

ALIGNMENT PROCEDURE MODEL 307

OPERATION NO.	DUMMY ANT.	CONNECT SIG.GEN. TO	SET SIG. GEN.DIAL AT	SET RADIO DIAL AT	WAVE BAND	ADJUST TRIMMERS	REMARKS
1	1/2 MFD	6J7G	465 KC 645 M	1000 KC 300 M	C	A-B-C-D	IF ALIGNMENT
2	400 OHMS	RED WIRE	18 M	18 M	A	1	DIAL CALIBRATION
3	400 OHMS	RED WIRE	18 M	18 M	A	2-3	ROCK VAR. COND.
4	400 OHMS	RED WIRE	5000 KC 60 M	5000 KC 60 M	B	4-5-6	
5	400 OHMS	RED WIRE	2000 KC 150 M	2000 KC 150 M	B	7	ROCK VAR. COND.
6	400 OHMS	RED WIRE	REPEAT OPERATION FOUR				
7	250 MMFD	RED WIRE	1500 KC 200 M	1500 KC 200 M	C	8-9-10	
8	250 MMFD	RED WIRE	600 KC 500 M	600 KC 500 M	C	11	ROCK VAR. COND.
9	250 MMFD	RED WIRE	REPEAT OPERATION SEVEN				

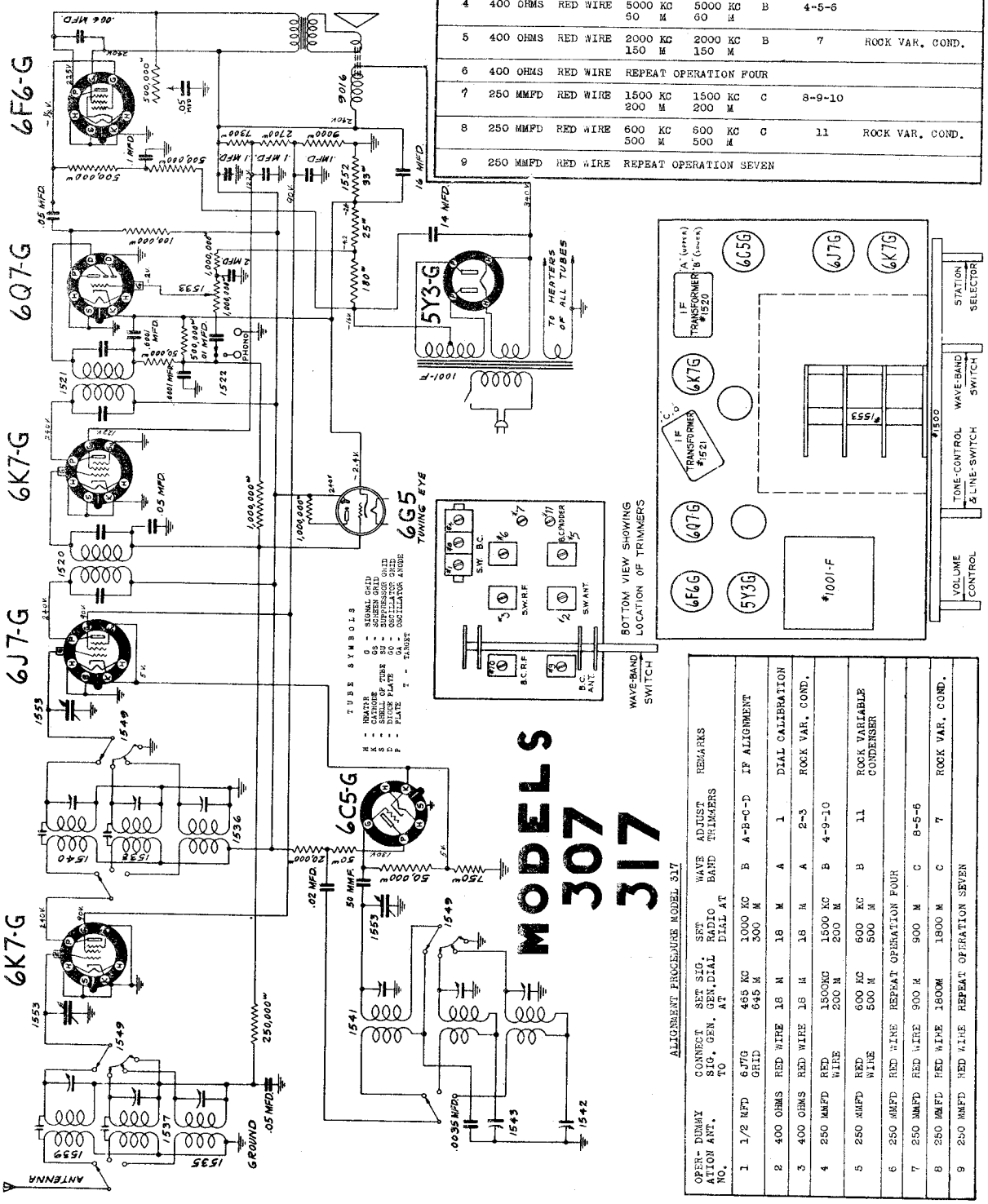

ALIGNMENT PROCEDURE MODEL 317

OPERATION NO.	DUMMY ANT.	CONNECT SIG. GEN. TO	SET SIG. GEN. DIAL AT	SET RADIO DIAL AT	WAVE BAND	ADJUST TRIMMERS	REMARKS
1	1/2 MFD	6J7G GRID	465 KC 645 M	1000 KC 300 M	B	A-B-C-D	IF ALIGNMENT
2	400 OHMS	RED WIRE	18 M	18 M	A	1	DIAL CALIBRATION
3	400 OHMS	RED WIRE	18 M	18 M	A	2-3	ROCK VAR. COND.
4	250 MMFD	RED WIRE	1500KC 200 M	1500 KC 200 M	B	4-9-10	
5	250 MMFD	RED WIRE	600 KC 500 M	600 KC 500 M	B	11	ROCK VARIABLE CONDENSER
6	250 MMFD	RED WIRE	REPEAT OPERATION FOUR				
7	250 MMFD	RED WIRE	900 M	900 M	C	8-5-6	
8	250 MMFD	RED WIRE	1800M	1800 M	C	7	ROCK VAR. COND.
9	250 MMFD	RED WIRE	REPEAT OPERATION SEVEN				

©John F. Rider, Publisher

MODELS 309,319
Schematic,Socket
Trimmers,Alignments

ULTRAMAR MFG. CORP.

MODELS 309 319

MODEL 309

BAND	FREQUENCY COVERAGE.
A -	SHORT WAVE - 13.6-52 METERS.
B -	MEDIUM WAVE - 1730-6000 K. C.
C -	BROADCAST - 527-1750 K. C.

MODEL 319

BAND	FREQUENCY COVERAGE.
A -	SHORT WAVE - 13.6-52 METERS.
B -	BROADCAST - 527-1750 K. C.
C -	LONG WAVE - 800-2000 METERS.

ALIGNMENT PROCEDURE MODEL 309

OPERATION NO.	DUMMY ANT.	CONNECT SIG.GEN. TO	SET SIG. GEN.DIAL AT	SET RADIO DIAL AT	WAVE BAND	ADJUST TRIMMERS	REMARKS
1	1/2 MFD	6A8G GRID	465 KC 645 M	1000 KC 300 M	C	A-B-C-D	IF ALIGNMENT
2	400 OHMS	RED WIRE	18 M	18 M	A	1	DIAL CALIBRATION
3	400 OHMS	RED WIRE	18 M	18 M	A	2-3	ROCK VAR. COND.
4	400 OHMS	RED WIRE	5000 KC 60 M	5000 KC 60 M	B	4-5-6	
5	400 OHMS	RED WIRE	2000 KC 150 M	2000 KC 150 M	B	7	ROCK VAR. COND.
6	400 OHMS	RED WIRE	REPEAT OPERATION FOUR				
7	250 MMFD	RED WIRE	1500 KC 200 M	1500 KC 200 M	C	8-9-10	
8	250 MMFD	RED WIRE	600 KC 500 M	600 KC 500 M	C	11	ROCK VAR. COND.
9	250 MMFD	RED WIRE	REPEAT OPERATION SEVEN				

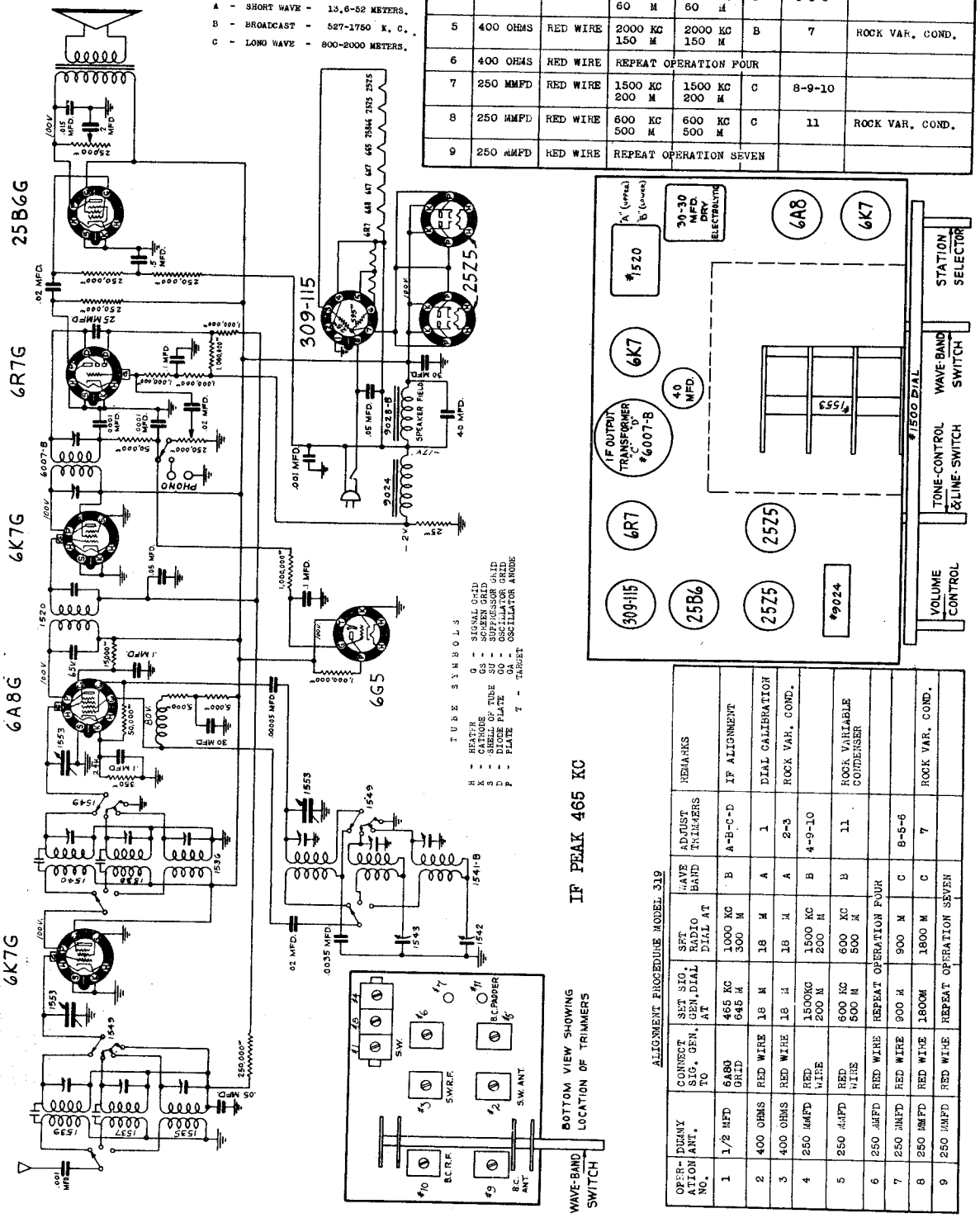

ALIGNMENT PROCEDURE MODEL 319

OPERATION NO.	DUMMY ANT.	CONNECT SIG. GEN. TO	SET SIG. GEN.DIAL AT	SET RADIO DIAL AT	WAVE BAND	ADJUST TRIMMERS	REMARKS
1	1/2 MFD	6A8G GRID	465 KC 645 M	1000 KC 300 M	B	4-B-C-D	IF ALIGNMENT
2	400 OHMS	RED WIRE	18 M	18 M	A	1	DIAL CALIBRATION
3	400 OHMS	RED WIRE	18 M	18 M	A	2-3	ROCK VAR. COND.
4	250 MMFD	RED WIRE	1500KC 200 M	1500 KC 200 M	B	4-9-10	
5	250 MMFD	RED WIRE	600 KC 500 M	600 KC 500 M	B	11	ROCK VARIABLE CONDENSER
6	250 MMFD	RED WIRE	REPEAT OPERATION FOUR				
7	250 MMFD	RED WIRE	900 M	900 M	C	8-5-6	
8	250 MMFD	RED WIRE	1800M	1800 M	C	7	ROCK VAR. COND.
9	250 MMFD	RED WIRE	REPEAT OPERATION SEVEN				

©John F. Rider, Publisher

UNITED AMERICAN BOSCH CORP.

MODEL 224
MODEL 226
Socket, Trimmers
Voltage, Alignment

For Schematics, see Index

ELECTRICAL SPECIFICATIONS

Type and Number of Tubes ..... 4 #39, 1 #37, 1 #71A, 2 #52 - Total 8
Power Supply Characteristics ..... 105 to 125 Volts 50 to 60 Cycles A.C.
Power Consumption ..... 200 Watts
Tuning Range ..... 550 to 1500 K.C.
Maximum Undistorted Output ..... 3. Watts
Line-Up Frequencies ..... I.F. 175 K.C., 1400 K.C., 600 K.C.

SOCKET VOLTAGES

TUBE	STAGE	FIL.	PLATE	SCREEN	CATHODE	GRID
39	R.F.	6.2	90	57	1.4	--
37	OSC.	6.0	80	--	--	--
39	1st. DET.	6.0	90	59	4.4	--
39	I.F.	6.1	80	57	1.4	--
39	2nd DET.	5.4	80	47	0	--
71A	DRIVER	5.0	85	85	--	1.8
52	OUTPUT	6.2	110	--	(6.3 FIL. to GND)	--
52	OUTPUT	6.2	110	--	(6.3 FIL. to GND)	--

(Battery reading with a low input signal. Be careful in attempting to align the receiver, the service man should familiarize himself with the general layout of the chassis, location of the tubes and the various adjustment condensers. A top view is shown in Figure #1 and should be carefully studied before the actual work is started.)

GENERAL DESCRIPTION

The Model 224 is an eight tube direct current superheterodyne receiver whose circuit consists of a stage of radio frequency amplification, an oscillator, a first detector of intermediate frequency amplification, a second detector, a driver and a push-pull stage of class B audio amplification.

The receiver is designed to operate on the standard broadcast band extending from 550 to 1500 K.C.

LINE-UP CAPACITOR ADJUSTMENTS

To properly align the chassis, it is essential to use a high grade modulated test oscillator and a sensitive output meter. The R.F. signal fed into the receiver must be relatively weak or it will cause the A. V. C. to function making correct alignment difficult. The sensitivity of the output meter must be sufficient to give satisfactory reading with a low input signal.

Before attempting to align the chassis, the service man should familiarize himself with the general layout of the chassis, location of the tubes and the various alignment condensers. A top view of the chassis is shown in Fig. #1 and should be carefully studied before the actual work is started.

I.F. ADJUSTMENTS - 175 K.C.

1. Set volume control on full.
2. Set test oscillator to 175 K.C. and apply test signal to grid of 39 I.F. tube through a .5 mfd. blocking condenser.
3. Adjust the two trimmers on top of second I.F. transformer to maximum output reading output of test oscillator as required.
4. Apply test signal to grid of 39 first detector tube and adjust the two trimmers on top of first I.F. transformer to maximum output.
5. Repeat above operations for accuracy.

OSC. & R.F. ADJUSTMENTS

1. Set test oscillator and dial scale to 1400 K.C.
2. With test signal still applied to the grid of the first detector, adjust trimmer A and the antenna trimmer screw to maximum output.
3. Apply test signal to antenna lead and adjust trimmer B and the antenna adjustment screw to maximum output.
4. Set test oscillator and dial scale to 600 K.C. and adjust oscillator lagging condenser on top of oscillator coil to maximum output.
5. Return to 1400 K.C. setting and readjust A and B antenna trimmer screw as the adjustment of the oscillator lagging condenser may have altered the setting of these trimmers.

GENERAL DESCRIPTION

The Model 226 is an eight-tube superheterodyne battery receiver whose circuit comprises one stage of radio frequency amplification, an oscillator, a first detector of intermediate frequency, a stage of push-pull class B audio amplification.

The receiver is designed to operate on the standard broadcast band extending from 550 to 1500 K.C.

LINE-UP CAPACITOR ADJUSTMENTS

To align the chassis it is essential to use a high grade modulated test oscillator and a sensitive output meter. The R.F. signal fed into the receiver must be relatively weak or it will cause the A. V. C. to function, making correct alignment difficult. The sensitivity of the output meter must be sufficient to give satisfactory reading with a low input signal.

Before attempting to align the chassis, the service man should familiarize himself with the general layout of the chassis, location of the tubes and the various alignment condensers. A top view of the chassis is shown in Fig. #1 and should be carefully studied before the actual work is started.

I.F. ADJUSTMENTS (175 K.C.)

1. Connect the receiver to the batteries as shown in Fig. #1.
2. Set volume control on full and set test oscillator to 175 K.C.
3. Apply test signal to the grid of the 234 I.F. tube and adjust the two trimmers on top of the second I.F. transformer to maximum output reducing output of test oscillator as required.
4. Apply test signal to grid of the 232 first detector and adjust the two trimmers on top of the first I.F. transformer to maximum output.
5. Recheck the above two operations for accuracy.

OSC. & R.F. ADJUSTMENTS

1. Set test oscillator and dial scale to 1400 K.C.
2. With test signal still applied to the grid of the first detector, adjust trimmer A on top of condenser gang to maximum output.
3. Apply test signal to antenna lead and adjust trimmer B and the antenna adjustment screw to maximum output.
4. Set test oscillator and dial scale to 600 K.C. and adjust oscillator lagging condenser on top of oscillator coil to maximum output.
5. Return to 1400 K.C. setting and readjust A and B antenna trimmer screw as the adjustment of the oscillator lagging condenser may have altered the setting of these trimmers.

ELECTRICAL SPECIFICATIONS

Type and Number of Tubes ..... 2 #32, 2 #30, 2 #34, 2 #49 - Total 8
Total A Battery Current ..... 5.25 Amps.
Total B Battery Current ..... 14.5 M.A. (No Signal)
Batteries Required ..... A Battery ..... 2 Volt Aircell
B Battery ..... 4 - 45 Volt Batteries
Maximum Undistorted Output ..... 3. Watts
Tuning Range ..... 550 to 1500 K.C.
Line-Up Frequencies ..... I.F. 175 K.C., 600 K.C., 1400 K.C.

SOCKET VOLTAGES

Stage	Tube	Plate	Screen	Fil.	Fil. to Ground
R.F.	232	155	65	1.95	0.3
1st Det.	232	150	65	1.95	0.2
Osc.	230	85	--	1.95	0.5
I.F.	232	155	65	1.95	
2nd Det.	234	1	57	1.95	
Driver	230	157	--	1.95	6.2-7.2
Audio	49	157	--	1.95	
Audio	49	157	--	1.95	

MODEL 226

©John F. Rider, Publisher

MODEL 600
Final Schematic
Socket, Trimmers

UNITED AMERICAN BOSCH CORP.

Specs. Alignment
Chassis, Notes

GENERAL DESCRIPTION

This model is a four tube, two band, superheterodyne receiver designed to be operated with only a six-volt storage battery. The receiver employs a type #6A7 tube as a combined first detector-oscillator, a type #6D6 tube as an intermediate frequency amplifier, a type #75 tube as a combined second detector, A.V.C. first audio amplifier, and a type #41 tube as an audio output amplifier. The power supply for this model is secured from a six volt storage battery. The plate voltage is secured by the use of a combined vibrator and mechanical rectifier.

SPEAKER ADJUSTMENT

This speaker has been carefully adjusted at the factory and should not require any further attention, as this design has been found to be very stable in maintaining its adjustment. However, if for any reason an adjustment is needed, it may be done by turning the screw, located nearer the speaker magnet, in either direction. Do not touch the other screw as this should always remain tight.

LINE-UP CAPACITOR ADJUSTMENTS

To properly align this receiver it is essential to use a high grade modulated test oscillator and a sensitive output meter. The R.F. signal fed into the receiver must be relatively weak or it will cause the A.V.C. to function making proper alignment difficult. The sensitivity of the output meter must be sufficient to give satisfactory reading with a low input signal. Before attempting to align the chassis, the service man should familiarize himself with the general layout of the chassis, the location of the tubes and the various alignment condensers. Top and bottom views of the chassis are shown in figures #1 and #2 and should be carefully studied before the actual work is started.

I.F. ADJUSTMENTS (465 KC.)

1. Connect the receiver to the storage battery by connecting the red lead to the positive terminal and the black lead to the negative terminal of the battery.
2. Set the volume control to the maximum position, the tone control to the treble position, the wave change switch to the broadcast band position and the dial indicator to approximately 600 KC.
3. Set the test oscillator to 465 KC. and apply the test signal to the grid of the type #6D6 I.F. amplifier tube thru a .5 mfd. condenser.
4. Adjust trimmer condenser #15 and #20 to maximum output.
5. Apply the test signal to the grid of the type #6A7 first detector-oscillator tube and adjust trimmer condensers #12 and #13 to maximum output.
6. Apply the test signal to the antenna lead of the receiver and adjust the trap coil trimmer #3 to minimum output.

SHORT-WAVE BAND ADJUSTMENTS

1. Set the wave change switch to the short wave band position.
2. Set the test oscillator and dial indicator to 6000 KC. and adjust the short-wave oscillator trimmer condenser, #7, to maximum output.
3. Adjust the short wave antenna trimmer #5 to maximum output.
4. Check the receiver over the shortwave band for sensitivity and calibration.

THE FINAL SCHEMATIC IS THE SAME AS THE PRELIMINARY ON PAGE 7-19, WITH EXCEPTION OF CHANGES IN FOLLOWING PARTS NUMBERS :

Dia #	Part #	Description and Value of Parts
1	RC95237	Antenna Coil assembly
2	Part of RC95237	Trap Coil
3	Part of RC95237	30-60 MMF Trimmer Condenser
4	Part of RC95237	1.5-10 MMF Trimmer Condenser
5	Part of RC95237	4-25 MMF Trimmer Condenser
7	Part of RC95238	6-50 MMF Trimmer Condenser
8	Part of RC95238	4-25 MMF Trimmer Condenser
11	Part of IC9569	45-135 MMF Trimmer Condenser
12	IC9569	1st I.F. coil (465 KC)
13	Part of IC9569	45-135 MMF Trimmer Condenser
14	RE95117	500 Ohm, 1/4 watt resistor
15	Part of IC9574	30-100 MMF Trimmer Condenser
16	IC9574	2nd IF coil (465 KC)
20	Part of IC9574	30-100 MMF Trimmer Condenser
21	VR9523	.5 Megohm Volume Control
22	RE9524	50000 Ohm, 1/8 Watt resistor
23	Part of IC9574	.0001 MF Mica Condenser
27	RE9585	1/4 Megohm, 1/4 Watt resistor
30	CW4-005	.005 MF , 400 Volt condenser
32	CW4-05	.05 MF , 400 Volt Condenser
37	RC95238	Oscillator Coil
40	CB9556	Power supply cable
41	CW-2550	.5 MF, 200 Volt Condenser
49	CW-9513	.05 MF, 200 Volt Condenser
51	RE9516	50 Ohm, 1/4 Watt Resistor
63	RE9575	50000 Ohm, 1/4 Watt Resistor
66	Part of IC9574	.0001 MF Mica Condenser

ELECTRICAL SPECIFICATIONS

Type and Number of Tubes ---------- 1 #6A7, 1 #6D6, 1 #75, 1 #41 - Total 4
Total Battery Current (6 volt battery) ---------- 2.6 Amps.
Battery Required ---------- 6 Volt Storage Battery
Maximum Output ---------- 0.6 Watts
Maximum Undistorted Output ---------- .25 Watts
Tuning Ranges ---------- 540 to 1725 KC., 2000 to 6800 KC.
Line-Up Frequencies ---------- 465 KC. I.F., 1600 KC., 600 KC., 6000 KC.

©John F. Rider, Publisher

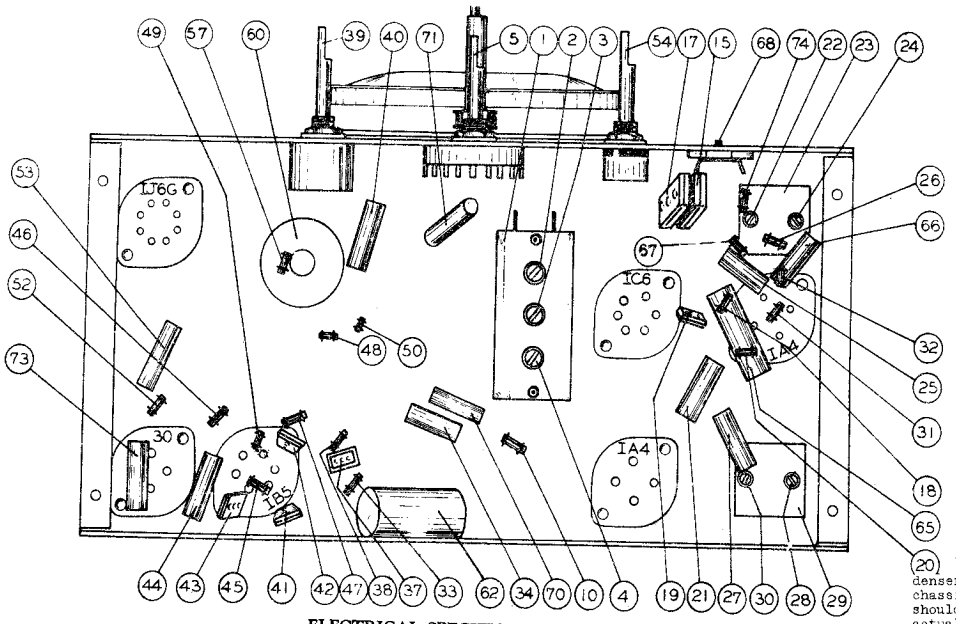

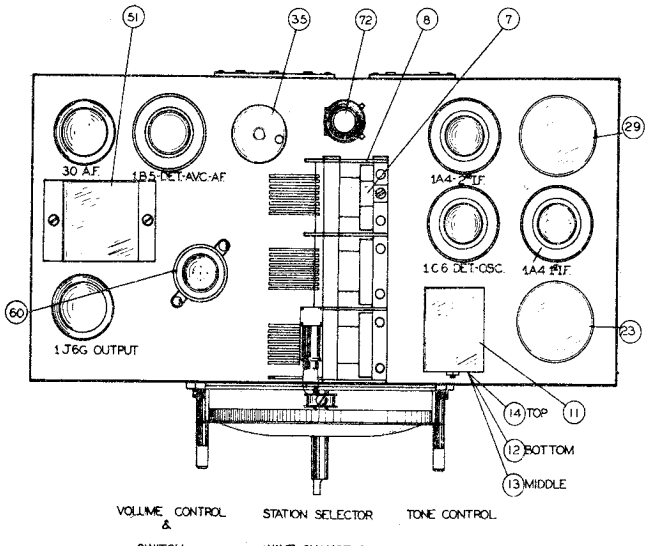

ELECTRICAL SPECIFICATIONS

Type and Number of Tubes	1 #1C6, 2 #1A4, 1 #1B5, 1 #30, 1 #1J6G, Total - 6
Total "A" Battery current	.65 amps.
Total "B" Battery current	.23 Mils.
Batteries Required	(Aircell, 3 Volt dry pack, or 2 V. storage battery (3 - 45 Volt "B" Batteries (2 - 4½ Volt "C" Batteries
Maximum Output	1.2 Watts
Undistorted Output	.5 Watts
Tuning Ranges	540 to 1725 KC., 2200 to 6000 KC., 5800 to 16000 KC.
Tune-Up Frequencies	465 KC. I.F., 1600 KC.. 600 KC., 6000 KC., 14000 KC.

The Schematic is the same as the 602 PRELIMINARY on PAGE 7-21 with the exception of a .1 Megohm resistor, Part # RE9584, indicated by # (74), connected in parallel with primary of 1st IF Transformer, indicated on Schematic as # (23). Changes in parts numbers and values are as follows :

DIA #	PART #	DESCRIPTION AND VALUE OF PART
5	SW9548	Wave Change Switch
16	RE95128	2500 Ohm, 1/8 watt resistor
22	Part of IC9572	45-135 MMF trimmer condensor
23	IC9572	1st I.F. Coil (465 KC)
24	Part of IC9572	45-135 MMF trimmer condensor
28	Part of IC9569	45-135 MMF trimmer condensor
29	IC9569	2nd I.F. Coil (465 KC)
30	Part of IC9569	45-135 MMF trimmer Condensor
35	IC9568	3rd I.F. Coil (465 KC)
36	Part of IC9568	30-60 MMF trimmer condenser
66	SA107257	Speaker Socket
62	CW 2-50	.5 MFD., 200 Volt Condenser
69	RE9527	5000 Ohm, 1/8 watt resistor
74	RE9584	.1 Megohm, 1/4 watt resistor
75	TR9596	Output transformer
76	DM9520	Speaker diaphragm

GENERAL DESCRIPTION

These models are six-tube, three band, battery-operated, superheterodyne receivers whose circuits employ a type 1C6 tube as a combined first detector-oscillator, two type 1A4 tubes as intermediate frequency amplifiers, a type 1B5 as a combined second detector - A.V.C. - first audio amplifier, a type 30 as an audio frequency amplifier, and a type 1J6G as a power output amplifier. This receiver is equipped with a permanent magnet dynamic speaker.

LINE-UP CAPACITOR ADJUSTMENTS

To properly align the receiver, it is essential to use a high grade modulated test oscillator and a sensitive output meter. The R.F. signal fed into the receiver must be relatively weak or it will cause the A.V.C. to function making correct alignment difficult. The sensitivity of the output meter must be sufficient to give satisfactory reading with a low input signal.

Before attempting to align the receiver, the service man should familiarize himself with the general layout of the location of the tubes and the various alignment condensers. The top and bottom view of the chassis are shown in Figure #1 and #2 and should be carefully studied before the actual work is started.

1. Connect the receiver to the batteries by plugging the "B" battery plugs and "C" battery plugs in their respective batteries. Connect the wire coming from the rear of the receiver to the terminal marked for the type of "A" supply you plan on using. Connect the red "A" battery lead to the positive terminal of the "A" battery and the black lead to the negative terminal of the "A" battery.

2. Set the volume control to the maximum position, the tone control to the treble position, the wave change switch to the broadcast band and the dial indicator to approximately 600 KC.

3. Set the test oscillator to 465 KC. and apply the test signal to the grid of the type 1A4 second I.F. tube through a .5 mfd. blocking condenser and adjust I.F. trimmer #36 to maximum output.

4. Apply the test signal to the grid of the type 1A4 first I.F. tube and adjust I.F. trimmers #28 and #30 to maximum output.

5. Apply the test signal to the grid of the type 1C6 first detector-oscillator tube and adjust I.F. trimmer condensers #22 and #24 to maximum output.

ADJUSTMENT OF BROADCAST BAND

1. Set the test oscillator and dial indicator to 1600 KC.

2. Apply the test signal to the antenna terminal of the receiver through a .0002 mfd. condenser and adjust the broadcast oscillator trimmer condenser #14 to maximum output.

3. Adjust the broadcast band preselector trimmer condensers #7 and #4 to maximum output.

4. Set the test oscillator and dial indicator to 600 KC. and adjust the broadcast oscillator series condenser #68 to maximum output at the same time rocking the variable condenser.

5. Return both the test oscillator and dial indicator to 1600 KC. and check the adjustment of trimmer condenser #14, #7, and #4.

ADJUSTMENT OF GREEN BAND

1. Set the wave change switch to the green band position.

2. Set the test oscillator and dial indicator to 6000 KC. and adjust the green band oscillator trimmer condenser #13 to maximum output.

3. Adjust the green band preselector trimmer condenser #3 to maximum output.

4. Check the receiver over the green band for sensitivity and calibration.

ADJUSTMENT OF RED BAND

1. Set the wave change switch in the red band position.

2. Set the test oscillator and dial indicator to 14000 KC. and adjust the red band oscillator trimmer condenser #12 to maximum output.

3. Adjust the red band preselector trimmer condenser #2 to maximum output.

4. Check the receiver over the red band for sensitivity and calibration.

©John F. Rider, Publisher

MODELS 610,610A
Final Schematic
Socket,Trimmers
Alignment,Notes

UNITED AMERICAN BOSCH CORP.

ELECTRICAL SPECIFICATIONS

Type and Number of Tubes - 1 #6A7,1 #6D6,1 #75,1 #43,1 #25Z5,1 #K49C(Ballast) - Total 6
Power Supply Characteristics ---- 105-125 volts D.C. or 105-125 volts, 50-60 cycle A.C.
Power Consumption ---------- 47 Watts
Maximum Output ---------- 1.0 Watt
Maximum Undistorted Output ---------- 0.75 Watt
Tuning Ranges ---------- (Broadcast Band - 540 to 1720 KC.
(Short-wave Band - 2100 to 7200 KC.
Line-Up Frequencies ---------- I.F. 465 KC., 1600 KC., 600 KC., 6000 KC.

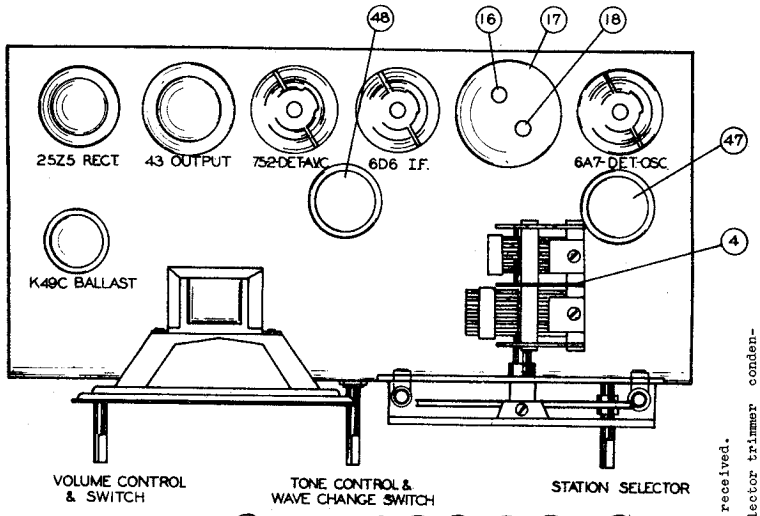

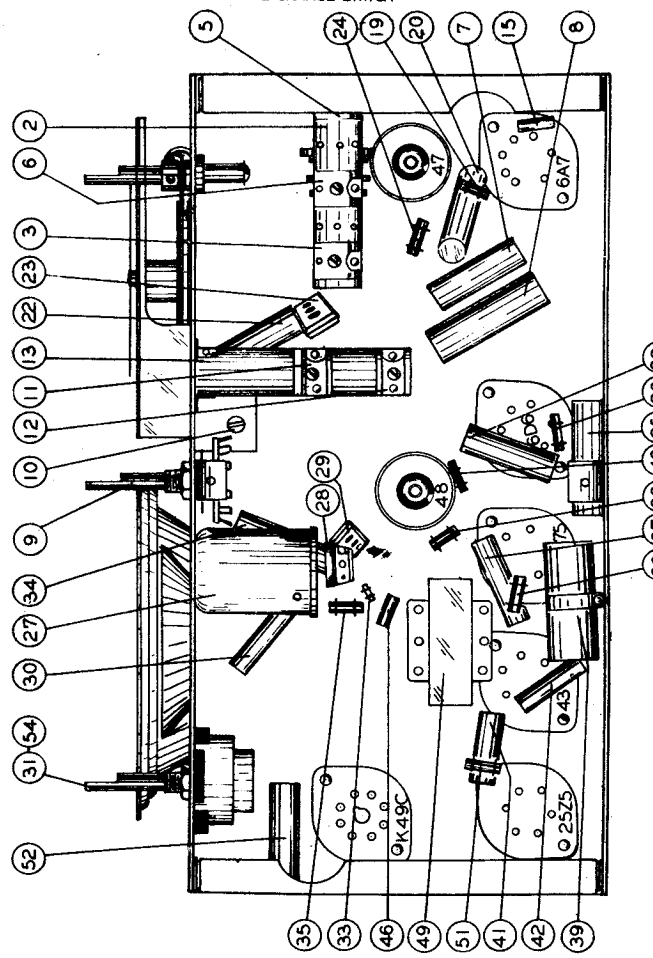

THE FINAL SCHEMATIC IS THE SAME AS THE PRELIMINARY SCHEMATIC GIVEN ON PAGE 7-38,WITH THE EXCEPTION OF THE FOLLOWING PARTS NUMBERS :

Dia.#	Part #	Description
2	RC95262-	Antenna Coil
3	- - - - -	4-25 MMF Trimmer (Part of RC95262)
5	- - - - -	30-60 MMF Trimmer (Part of RC95262)
6	- - - - -	1.5-10 MMF Trimmer (Part of RC95262)
11	- - - - -	4-25 MMF Trimmer (Part of RC95199)
12	- - - - -	10-35 MMF Trimmer (Part of RC95199)
13	RC95199-	Oscillator coil assembly

GENERAL DESCRIPTION

This model is a six-tube, two-band, A.C.-D.C. superheterodyne receiver. A type 6A7 tube is used as a combined first detector-oscillator, a type 6D6 tube as an intermediate frequency amplifier, a type 75 tube as a second detector and automatic volume control and first audio frequency amplifier, a type 43 as an output amplifier, a type 25Z5 as a rectifier, and a type K49C as a ballast tube.

LINE-UP CAPACITOR ADJUSTMENTS

To align the circuits of this receiver it is essential to use a high grade modulated test oscillator, the output of which can be continuously varied with absence from overload when the individual circuits of the receiver are brought into alignment.

A conventional output meter can be connected across the terminals of the speaker voice coil to indicate when the circuits are aligned. The sensitivity of the output meter must be sufficient to give satisfactory reading with a low input signal.

Before attempting to align the receiver, the service man should familiarize himself with the general layout of the chassis, the location of the tubes and various alignment condensers. Top and bottom views of the chassis are shown in Figs. #1 and #2 and should be carefully studied before the actual work is started.

ADJUSTMENT OF I.F. (465 KC.)

1. Set the volume control to maximum position and tone control to treble position.

2. Connect the output meter to the terminals of the voice coil.

3. Set the test oscillator to 465 KC. and apply the test signal to the grid of the type 6D6 I.F. tube through a .5 mfd. blocking condenser.

4. Adjust trimmer condenser #28 to maximum output.

5. Apply the test signal to the grid of the type 6A7 first detector-oscillator tube and adjust trimmer condensers #16 and #18 to maximum output.

6. Connect the test oscillator to the antenna of the receiver and with a strong input signal, adjust wave trap trimmer condenser #5 to minimum output.

BROADCAST BAND ADJUSTMENT

1. Set the test oscillator and dial indicator to 1600 KC.

2. Apply the test signal to the antenna of the receiver through a .0002 mfd condenser.

3. Adjust oscillator trimmer condenser #11 until the signal is received.

4. Adjust the preselector trimmer condenser #5 to maximum output.

5. Set test oscillator and dial indicator to 600 KC., and adjust the oscillator series condenser #10 until the signal is received. Tune the receiver to a slightly lower frequency and readjust trimmer #10 to maximum output. If the sensitivity increases, continue this procedure in the same direction until maximum sensitivity is reached. If the sensitivity decreases, try this procedure at slightly higher frequencies until maximum sensitivity is reached.

6. Return test oscillator and dial indicator to 1600 KC. and check adjustment of the oscillator and preselector trimmer condensers.

ADJUSTMENT OF SHORT-WAVE BAND

1. Set the wave-change switch to the short-wave band position.

2. Set the test oscillator and dial indicator to 6000 KC. and adjust the oscillator trimmer condenser #12 until the signal is received.

3. Adjust the preselector trimmer condenser #5 to maximum output.

4. Check the sensitivity and calibration over scale.

©John F. Rider, Publisher

Socket, Trimmers
Chassis

UNITED AMERICAN BOSCH CORP.

MODELS 660T, 660C
Final Schematic

THE FINAL SCHEMATIC IS THE SAME AS THE PRELIMINARY GIVEN ON PAGE 7-35,36, WITH THE EXCEPTION OF CHANGES IN A PORTION OF THE A.V.C. CIRCUITS, SHOWN IN THE ACCOMPANYING FIGURE. DATA AND SCHEMATIC IS ALSO GIVEN FOR THE 25 CYCLE UNIVERSAL TRANSFORMER.
THE FOLLOWING CHANGES IN PART VALUES AND NUMBERS HAVE BEEN MADE:

Dia #	Part #	Description and Value of Part
2	CW 2-50	.5 MFD, 200 Volt Condenser
37	SW9564	Switch and Bracket assembly- Oscillator section.
72	SA101404	15,000 ohm, 1 watt resistor
81	RE96101	37 ohm, 1/4 watt resistor
82	TR 9558	Output transformer
88	9612	Line cable assembly
90	CW 2-05	.05 MFD, 200 Volt condenser

SCHEMATIC OF A.V.C. CHANGES

©John F. Rider, Publisher

MODELS 670S, 670C
Final Schematic
Chassis

UNITED AMERICAN BOSCH CORP.

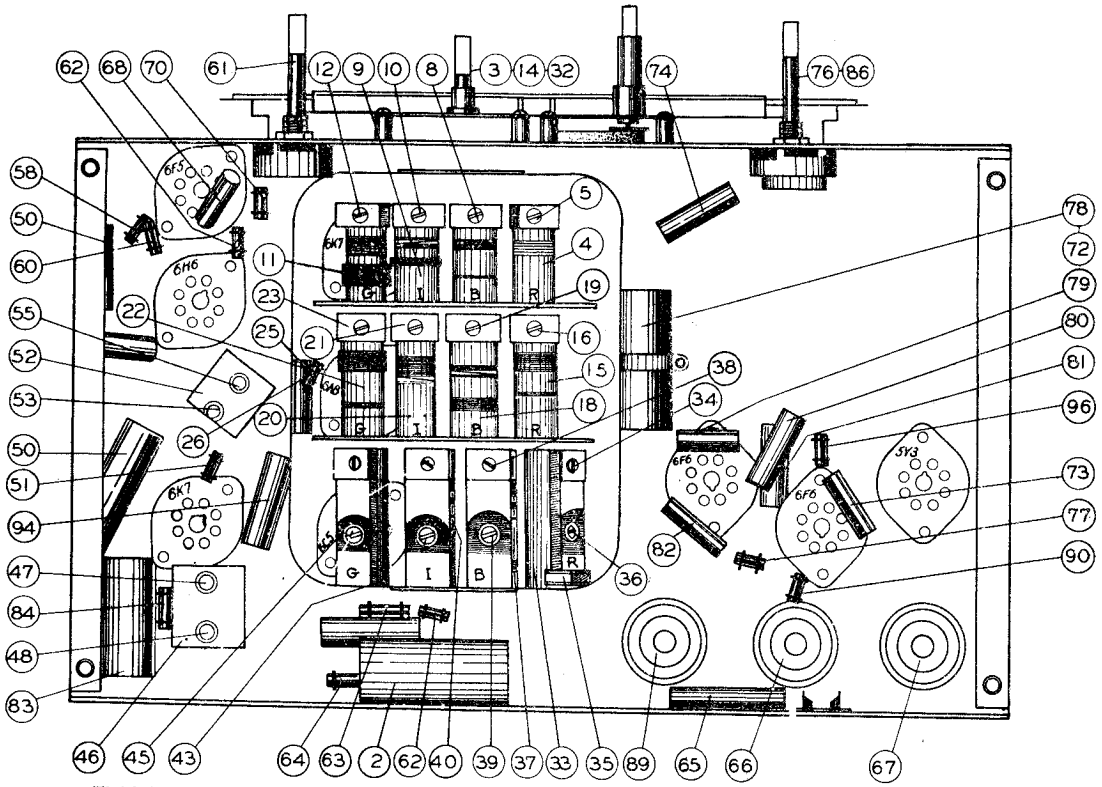

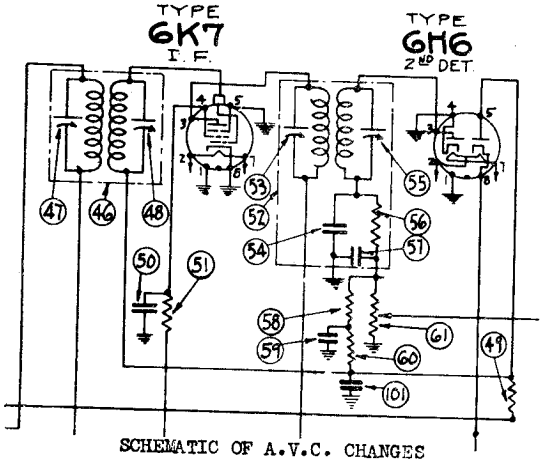

SCHEMATIC OF A.V.C. CHANGES

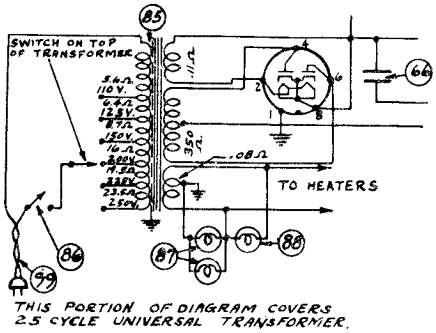

THIS PORTION OF DIAGRAM COVERS 25 CYCLE UNIVERSAL TRANSFORMER.

THE FINAL SCHEMATIC OF THE MODELS 670S and 670C IS THE SAME AS THE PRELIMINARY SCHEMATIC GIVEN ON PAGE 7-39,40, WITH THE EXCEPTION OF CHANGES IN THE A.V.C. CIRCUITS WHICH ARE SHOWN IN THE ACCOMPANYING FIGURE. OTHER FIGURES GIVE THE NEW PARTS LAYOUT, AND SCHEMATIC AND DATA OF THE 25 CYCLE POWER TRANSFORMER. CHANGES IN PARTS AND THEIR VALUES ARE :

Dia #	Part #	Description and Value of Parts
2	CW 2-100	1 MFD, 200 Volt Condenser
50	CW 2-25	.25 MFD, 200 Volt Condenser
62	SA105268	1500 Ohm, 1/4 watt resistor
70	RE9584	.1 Megohm, 1/4 watt resistor
76	VR9537	.1 Megohm tone control, 5000 Ohm min.
88	LP9510	Tuning indicator lamp, 6.3 V., .25 Amp.
90	RE95101	37 Ohm, 1/4 Watt resistor
92	TR9577	Output transformer
99	CB9512	Line cable assembly
101	CW 2-05	.05 MFD, 200 Volt condenser

©John F. Rider, Publisher

©John F. Rider, Publisher

ELECTRICAL SPECIFICATIONS

Type and Number of Tubes	4 #6K7, 1 #6A8, 1 #6C5, 2 #6H6, 1 #6F5, 2 #6L6, 1 #5Z3, 1 #5Y3
Power Supply Characteristics	105 to 125 volts, 50 to 60 cycle A.C.
Power Consumption	180 Watts
Maximum Output	30 Watts
Maximum Undistorted Output	20 Watts
Tuning Ranges	(Green Band - 150 to 390 KC. (White Band - 525 to 1800 KC. (Blue Band - 1750 to 6000 KC. (Red Band - - 5800 to 18500 KC.
Line-Up Frequencies	I.F. 465 KC., 350 KC., 165 KC., 1400 KC., 600 KC., 5000 KC.. 2000 KC., 17000 KC., 6500 KC.

GENERAL DESCRIPTION

The Model 680 is a thirteen-tube, four-band, high fidelity superheterodyne, employing all-metal tubes, with the exception of the rectifiers. This model is built in two units, namely, the receiver proper and the class A.-B.1 amplifier, both of which are provided with an independent power supply. Among the refinements and features incorporated are high fidelity, bass and treble control, delay and a triple automatic volume control system. The second A.V.C. operates in the usual manner and controls the first I.F. amplifier tube. The third A.V.C., which controls the second I.F. amplifier tube, is designed to give proper tuning meter indications under all conditions. The FIRST A.V.C. controls the R.F. and first detector and does not start to function until a comparatively strong signal is received, thus the highest possible sensitivity is maintained at low signal level. Due to the fact that the first A.V.C. voltage is essentially flat ± 30 KC. from resonance, greater first A.V.C. voltage is supplied if the receiver is used in the presence of a strong off-side signal, thereby preventing cross-talk, R.F. and modulation overload on the desired signal. The delay system, which prevents between-station noise, automatically becomes inactive when a signal is received.

A type 6K7 tube is used as an R.F. amplifier, a type 6A8 as a first detector, a type 6C5 as an oscillator, two 6K7's as I.F. amplifiers, a type 6H6 as a second detector and second and third A.V.C., a type 6K7 as a first A.V.C. amplifier, a type 6F5 as an audio amplifier, two type 6L6's in the output stage, a type 5Y3 as a rectifier in the main chassis and a type 5Z3 as a rectifier in the power amplifier chassis

REMOVING INDIVIDUAL COIL AND SWITCH SECTIONS OF CENTROMATIC UNIT

If a component part located underneath the switch and coil assemblies of the "CentrOmatic" unit has to be replaced or a section of the unit has to be removed for inspection, each section can easily be removed separately. To do this, proceed with care as follows:

1. Remove the two screws which fasten the mounting plate of the wave-change switch shaft to the chassis frame. Pull switch shaft straight out.
2. Unsolder the stator and rotor leads from the gang condenser.
3. The fastening screws for the switch sections are located on top of the "CentrOmatic" unit and are indicated by X, Y and Z in Figure #1. Remove the corresponding screws.
4. Each individual section can then be pulled out straight.

NOTE: On the R.F. section, the plate lead from the 6K7 socket will have to be unsoldered from the switch terminal before the section can be removed.

On the oscillator section, the plate lead to the 6C5 socket and the plate supply lead will have to be unsoldered from the switch terminal before the section can be removed.

5. After repairs have been made, resolder the plate leads mentioned above and replace the section, being careful to observe that the slotted holes in the switch bracket line up with the round guide pins on the base plate of the "CentrOmatic" unit. This is IMPORTANT as the switch shaft cannot be inserted if the switch brackets do not line up.
6. Replace the section fastening screws.
7. Resolder the stator and rotor leads on gang condenser.
8. Replace the switch shaft and the mounting fastening screws. When inserting the switch shaft, be careful that all the switch discs are in the same position, otherwise the switch shaft will not slide in. NEVER force the shaft into the switch discs. If shaft does not slide in freely, examine the position of the slot in each switch disc.

LINE-UP CAPACITOR ADJUSTMENTS

To align the circuits of this receiver, it is essential to use a high grade modulated test oscillator, the output of which can be continuously varied with absence from overload when the individual circuits of the receiver are brought into alignment. A conventional output meter can be connected across the terminals of the speaker voice coil to indicate when the circuits are aligned. The sensitivity of the output meter must be sufficient to give satisfactory reading with a low input signal.

Before attempting to align the receiver, the service man should familiarize himself with the general layout of the chassis, the location of the tubes and various alignment condensers. Top and bottom views of the chassis are shown in Figures #1 and #2 and should be carefully studied before the actual work is started.

It is recommended that no attempt be made to align this receiver unless it is definitely known that it is necessary and then only if high grade equipment is available, preferably a cathode ray oscillograph.

ADJUSTMENT OF I.F. (465 KC.)

1. Set volume control at maximum, the tone control on bass, the wave-change switch on broadcast, the dial indicator at approximately 600 KC., and the HIGH FIDELITY CONTROL AT MINIMUM (COUNTER-CLOCKWISE).
2. Connect output meter across voice coil of speaker.
3. Set test oscillator at 465 KC., and connect to the grid of the second I.F. tube (6K7) through a .5 mfd. blocking condenser.
4. Adjust trimmer #74 for maximum output.
5. Connect the test oscillator (through same blocking condenser) to the grid of the first I.F. tube (6K7), and adjust trimmers #61 and #62 for maximum output, reducing the oscillator output as required.
6. Connect the test oscillator (through same blocking condenser) to the grid of the first detector and adjust trimmers #51 and #52 for maximum output.
7. Adjust trimmer #81 which controls the tuning meter circuit, for a sharp dip in the output. This dip in the output will occur simultaneously with the tuning meter deflection. This adjustment should be made very accurately to a minimum reading.

ADJUSTMENT OF GREEN BAND

1. Set wave-change switch to Green Band position.
2. Set test oscillator and dial indicator to 350 KC.
3. Apply test signal to antenna terminal of the chassis through a .0002 mfd. series condenser and adjust #35, #21, and #6 for maximum output.
4. Set test oscillator and dial indicator to 165 KC., and adjust #36 for maximum output, at the same time rocking the variable tuning condenser.
5. Return to 350 KC. setting with both test oscillator and dial indicator, and repeat adjustment of #35, #21 and #6 for accuracy.

ADJUSTMENT OF BROADCAST BAND

1. Set wave-change switch to the White or Broadcast Band position.
2. Set test oscillator and dial indicator to 1400 KC., and adjust #38, #24 and #8 for maximum output.
3. Set test oscillator and dial indicator to 600 KC., and adjust #39 for maximum output, at the same time rocking the variable tuning condenser.
4. Return to 1400 KC. setting and make readjustment of #38, #24 and #8.

ADJUSTMENT OF BLUE BAND

NOTE: In adjusting the Blue and Red Bands, a .0002 mfd. condenser and a 400 ohm resistor connected in series should be inserted in the high side of the test oscillator leads. This condenser-resistor combination is the approximate equivalent of a short-wave antenna.

1. Set wave-change switch to Blue Band position.
2. Set test oscillator and dial indicator to 5000 KC., and adjust #42, #26 and #10 for maximum output.
3. Set test oscillator and dial indicator to 2000 KC., and adjust #43 for maximum output, at the same time rocking the variable tuning condenser.

ADJUSTMENT OF RED BAND

1. Set wave-change switch to Red Band position.
2. Set test oscillator and dial indicator to 17000 KC., and adjust #45, #29 and #13 for maximum output.
3. Set test oscillator and dial indicator to 6500 KC., and adjust #47 for maximum output, at the same time rocking the variable tuning condenser.
4. Return to 17000 KC. setting and make readjustment of #45, #29 and #13.

IMPORTANT: While testing or making repairs on this receiver, the chassis should not be turned upside down or on its side for any long period of time while the set is turned on as the chemicals in the electrolytic filter condenser will come out through the air vents, making the condenser appear to be defective. If left in this position too long the condenser may be injured.

WARNING: On the first A.V.C. transformer, Diagram #119, are two trimmer condensers which should, under no conditions, be adjusted excepting when the entire transformer has been replaced. The first production lot of this model was shipped with these two trimmers accessible, but on all future shipments these will be covered with a strip of fish paper.

The adjustment of this transformer is very critical, requiring the use of a very sensitive micro-ammeter and after the adjustments have been made at the factory, no further adjustment will be necessary.

Should it become necessary to replace this A.V.C. transformer, communicate with the Radio Service Department of the United American Bosch Corporation, Springfield, Massachusetts.

FINAL SPEAKER CABLE COLOR CODE

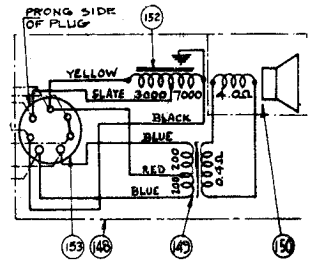

MODEL 680
Final Schematic

UNITED AMERICAN BOSCH CORP.

Socket, Trimmers
Chassis, Parts

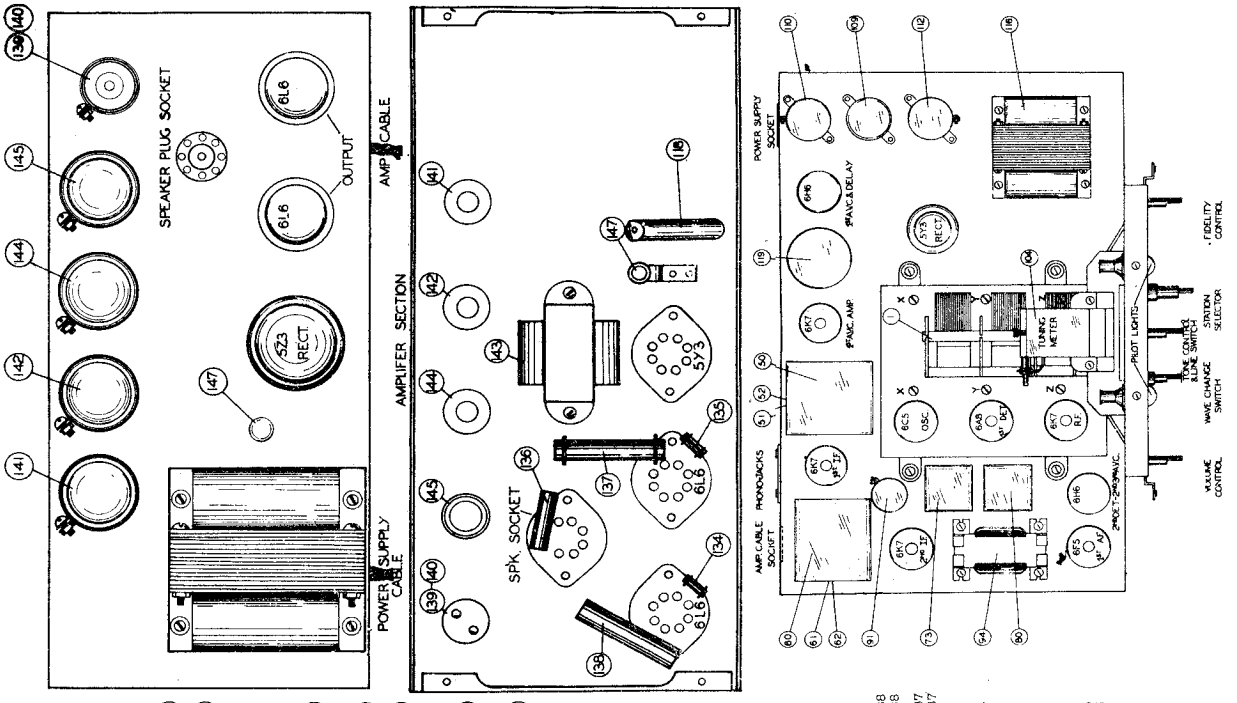

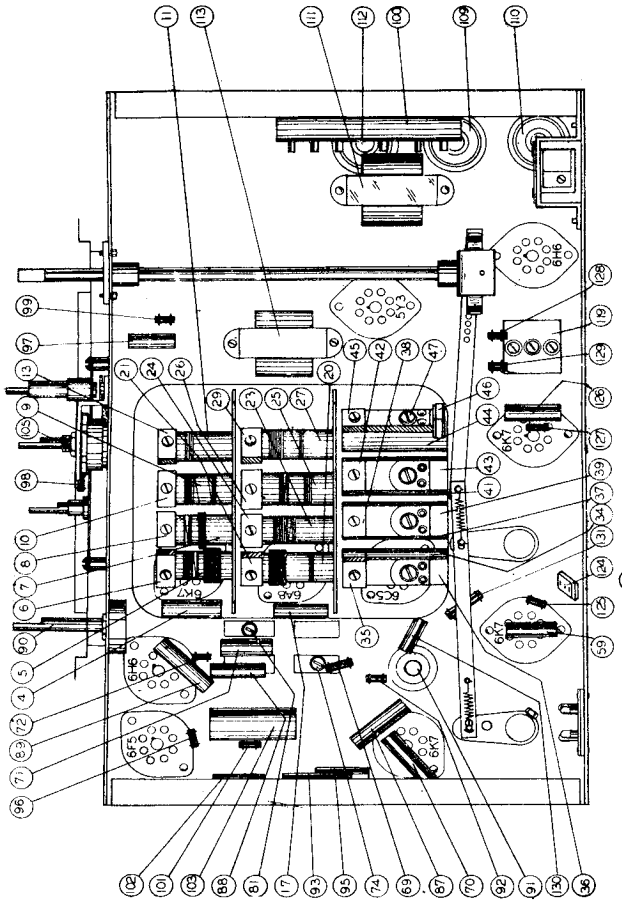

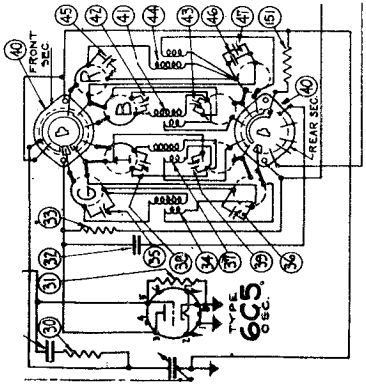

Dia. #	Part #	Description of Parts
5	RC 95219	Antenna coil (green)
7	RC 95218	Antenna coil (white)
9	RC 95212	Antenna coil (blue)
11	RC 95220	Antenna coil (red)
12		Twisted wire 1.5 mmf. - part of RC 95220
20	RC 95216	R.F. coil (green)
21	CS 9554	4-30 mmf. trimmer condenser
22	RE 9534	100,000 ohm, 1/4 W. resistor
23	RC 95215	R.F. coil (white)
25	RC 95214	R.F. coil (blue)
26	RC 95217	R.F. coil (red)
34	RC 95222	Oscillator coil (green)
37	RC 95221	Oscillator coil (white)
41	RC 95213	Oscillator coil (blue)
44	RC 95223	Oscillator coil (red)
50	IC 9588	First I.F. coil assembly (465 KC.)
51		250-350 mmf. trimmer condenser - part of IC 9588
52		250-350 mmf. trimmer condenser - part of IC 9588
60	*IC 9587	Second I.F. coil assembly (456 KC.)
61		250-350 mmf. trimmer condenser - part of IC 9587
62		250-350 mmf. trimmer condenser - part of IC 9587
69	RE 95105	1 meg., 1/2 W. resistor
72	RE 95105	1 meg., 1/2 W. resistor
73	IC 9594	I.F. coil assembly (diode)
74		25-100 mmf. trimmer condenser - part of IC 9594
80	IC 9592	Tuning selector coil assembly (diode)
81		25-100 mmf. trimmer condenser - part of IC 9592
96	SA 108272	10,000 ohm, 1/4 W. resistor
98	RE 95156	20,000 ohm, 1/2 W. resistor
115	LP 9516	Tuning indicator lamp
118	RE 95137	300 ohm, 15 W. resistor
119	IC 9593	First A.V.C. transformer assembly
120		80-200 mmf. trimmer condenser - part of IC 9593
121		80-200 mmf. trimmer condenser - part of IC 9593
125	RE 95105	1 meg., 1/2 W. resistor
131	RE 95135	47,000 ohm, 1/2 W. resistor
147	SK 9519	Fuse, 1.5 amp.
148	SK 9545	Speaker assembly
149	TR 9594	Output transformer
150	DM 9517	Diaphragm and voice coil assembly
151	SA 108257	150 ohm, 1/4 W. resistor
152	CL 9564	Field coil
153	PG 9567	Speaker plug

FINAL SCHEMATIC IS THE SAME AS THE PRELIMINARY SCHEMATIC ON PAGE 7-43,44, WITH THE EXCEPTION OF A CORRECTION IN THE OSCILLATOR CIRCUIT, THE CONNECTION OF A 150 OHM RESISTANCE (151) BETWEEN THE FRONT AND REAR SECTIONS OF THE OSCILLATOR WAVE CHANGE SWITCH AS SHOWN IN THE SCHEMATIC SECTION; THERE IS ALSO DIFFERENT COLOR CODING ON THE SPEAKER CABLE AS SHOWN IN THE SCHEMATIC ON THE ALIGNMENT-PAGE. THE FOLLOWING PARTS CHANGES WHERE ALSO MADE IN THE FINAL DATA:

©John F. Rider, Publisher

UNITED MOTORS SERVICE

MODEL R 640 Delco
Schematic, Voltage
Alignment

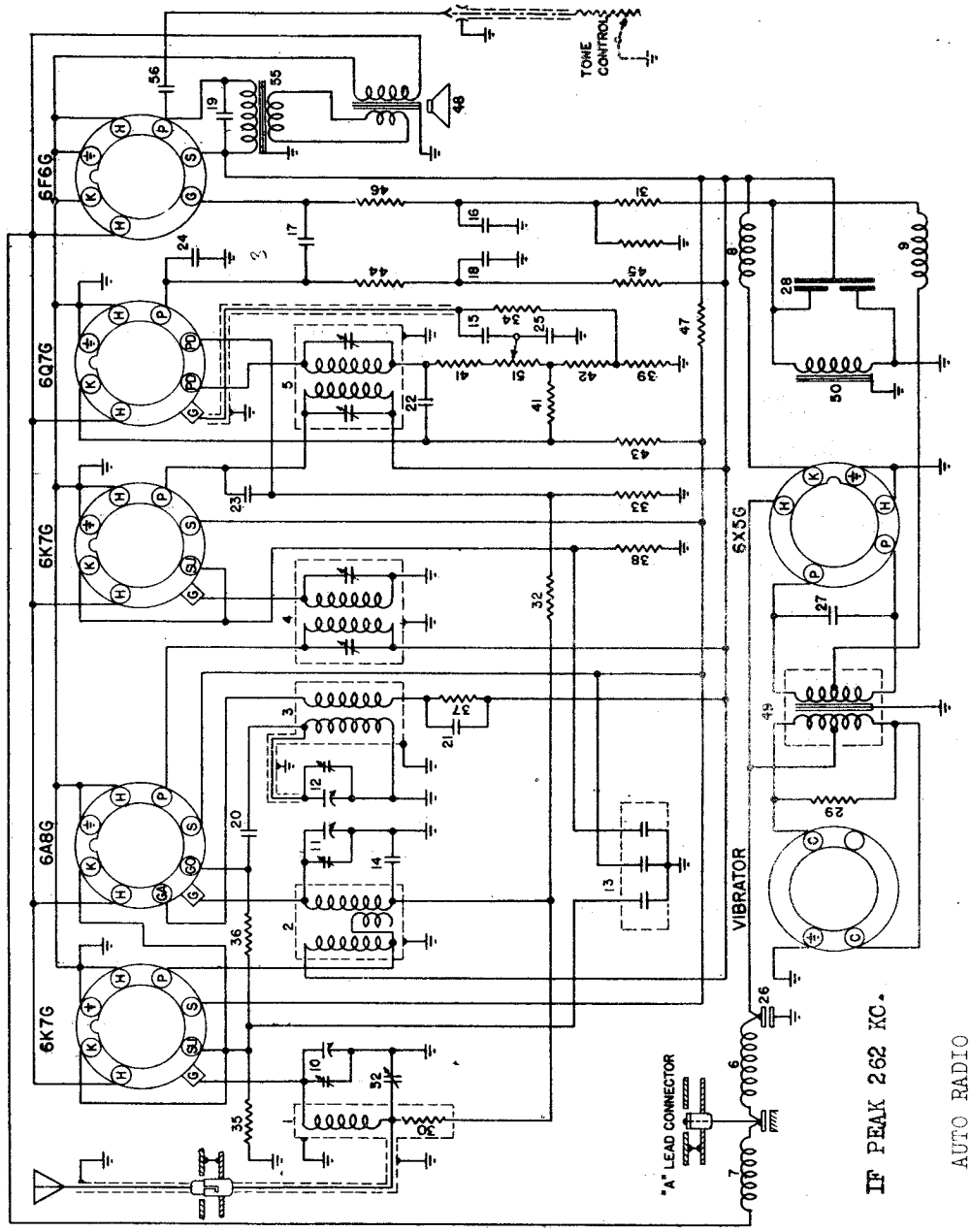

IF PEAK 262 KC.

AUTO RADIO

Delco Model R-640

Date: 2-3-37

TUBE SOCKET VOLTAGES

Tube	Function	H	P	S	SU	GA	GO	K
6K7G	R-F Amp.	6	230	55	4.0	-	-	4.0
6A8G	Osc. Mod.	6	230	55	-	120	0	4.0
6K7G	I-F Amp.	6	230	55	2.7	-	-	2.7
6Q7G	Det. Aud.	6	125	-	-	-	-	11.0
6F6G	Output	6	220	230	-	-	-	0
6X5G	Rectifier	6	-	-	-	-	-	230

All readings taken from tube socket contacts to ground with 1000 ohm per volt voltmeter.

Aligning I-F Stages at 262 K.C.

Set signal generator to 262 K.C. and connect signal lead to grid cap of 6A8G tube, through a .1 mfd. condenser. Adjust trimmers on both I-F coils located on under side of chassis sub-panel. Repeat adjustments until maximum output is obtained, using a weak signal.

Aligning R-F Stages

Set signal generator to 1530 K.C. and connect signal lead to antenna terminal of receiver through a .0002 mfd. mica condenser. Adjust oscillator trimmer on middle section of condenser gang. Set signal generator at 1400 K.C. and turn condenser gang until this signal is tuned in. Adjust the other two sections of condenser gang. Set signal generator to 600 K.C. and turn condenser plates until this signal is tuned in. Adjust antenna compensating condenser (located near antenna connector) while rocking the condenser gang plates back and forth until maximum output is obtained. Repeat adjustments made at 1400 K.C.

©John F. Rider, Publisher

MODEL R-642 Delco
Schematic, Alignment

UNITED MOTORS SERVICE

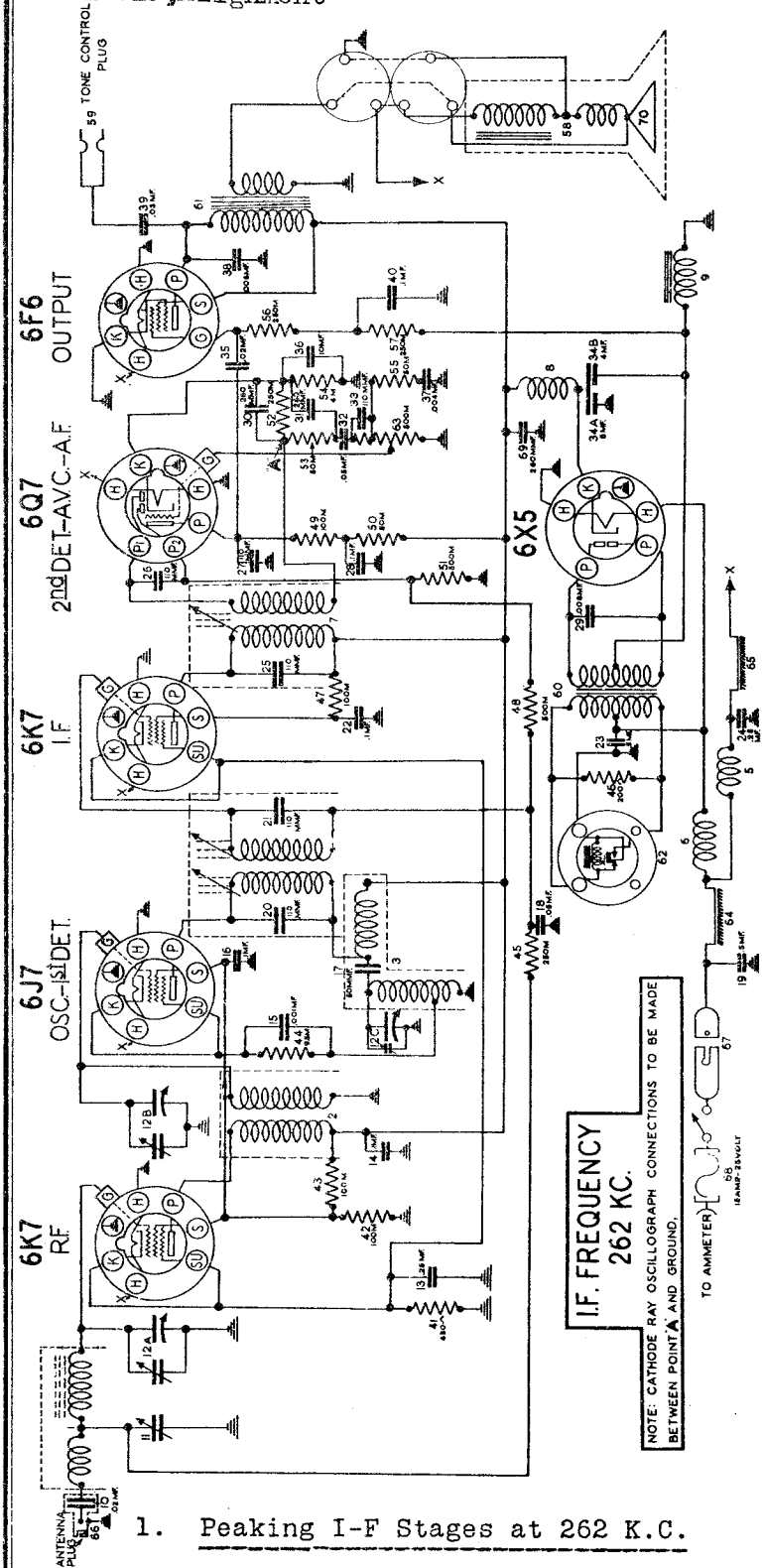

AUTO RADIO

Delco Model R-642

Date: 6-2-37

R.F. ALIGNMENT ON NEXT PAGE

CIRCUIT ALIGNMENT

1. Peaking I-F Stages at 262 K.C.

(a) Connect the signal lead of the signal generator to the grid cap of the 6J7 tube, through a .1 mfd. condenser. Do not remove grid clip from tube. Connect the ground lead of the signal generator to the receiver case.

(b) Connect output meter from tone control jack to receiver case.

(c) Turn condenser gang plates to approximately 1000 K.C. and volume control on full.

(d) Adjust screws "A" and "C", located on the top of each I-F transformer, for maximum output. (See Parts Layout.)

(e) Adjust screw "B" (third I-F adjustment) on bottom of chassis, accessible through hole provided in bottom cover of receiver. DO NOT REMOVE BOTTOM COVER OF RECEIVER FOR THIS ADJUSTMENT.

(f) Repeat (d) and (e) until no further increase in output can be obtained.

Note: In order not to actuate the A.V.C. circuit, always use the lowest output from the signal generator, which will give a readable indication on the output meter.

©John F. Rider, Publisher

UNITED MOTORS SERVICE

MODEL R-642 Delco
Socket, Trimmers
Chassis, Alignment

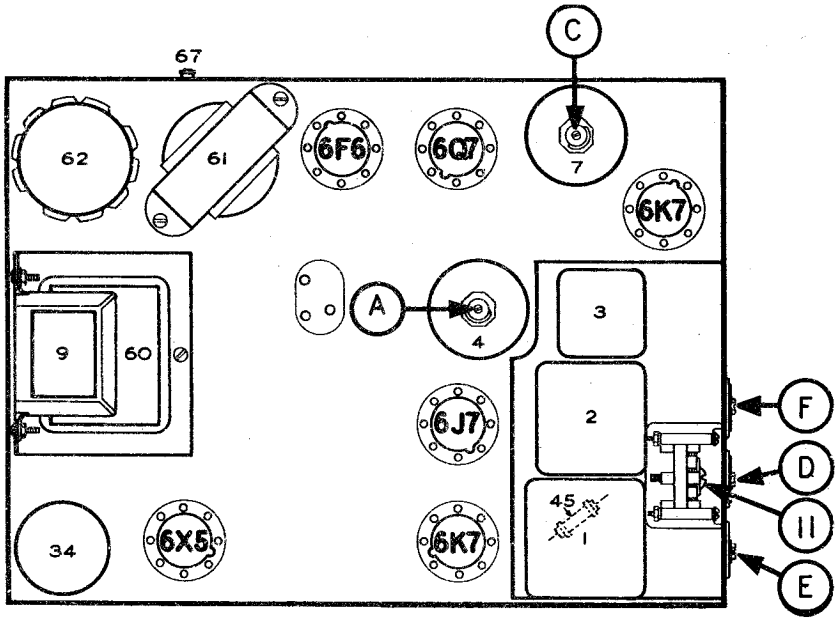

FIG. 3--PARTS LAYOUT--Top View

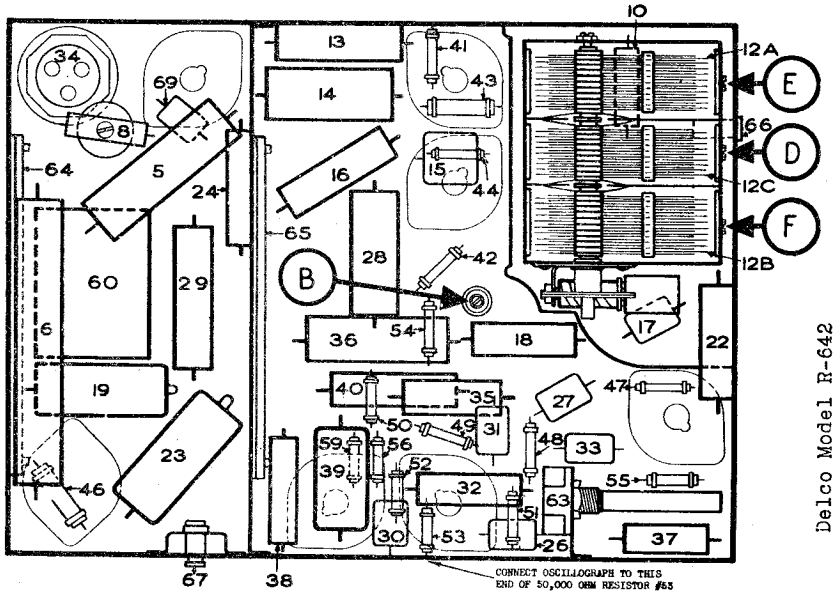

FIG. 4--PARTS LAYOUT--Bottom View

Delco Model R-642

Date: 6-2-37

I.F. ALIGNMENT ON PRECEDING PAGE

2. Aligning at 1530 Kilocycles

(a) Leave signal lead of signal generator connected to grid cap of 6J7 tube. Turn condenser gang plates all the way out of mesh and against high frequency stop.

(b) Set signal generator to exactly 1530 kilocycles and remove small plate on side of chassis covering trimmer screws.

(c) Adjust trimmer "D" on condenser gang carefully until generator signal is tuned in with maximum output.

3. Aligning at 1400 Kilocycles

(a) Connect generator signal lead to antenna connection of receiver THROUGH A .0002 MFD. MICA CONDENSER.

(b) Set signal generator carefully to 1400 kilocycles and turn condenser plates until this signal is tuned in with maximum output

(c) Adjust trimmers "E" and "F" for maximum output. Do not disturb the adjustment of trimmer "D" set at 1530 K.C.

4. Aligning at 600 Kilocycles

(a) Set signal generator to 600 kilocycles and turn condenser plates until signal is tuned in.

(b) Remove small button plug on control side of receiver. Adjust Delco Syncro-Tuning condenser (Illus. #11), while rocking tuning condenser plates back and forth slightly until maximum output is obtained.

(c) Repeat adjustments of trimmers "E" and "F" at 1400 kilocycles as covered in paragraphs (b) and (c) under "Aligning at 1400 Kilocycles".

©John F. Rider, Publisher

MODEL R-640 Delco
Parts List
MODEL R-642 Delco
Voltage, Parts

UNITED MOTORS SERVICE

Delco Model R-642
Date: 6-2-37

Illus. No.	Part No.	Part Name	Description
1	1212042	Coil assy.	Antenna
2	1212041	Coil assy.	R-F
3	1212043	Coil assy.	Oscillator
4	1212032	Coil assy.	1st I-F
7	1212033	Coil assy.	2nd I-F
8	1212062	Choke	R-F "B"
9	1212046	Choke	"B" filter (iron core)
10	1212045	Condenser	Tubular .02 mfd. 200 V.
11	1212039	Condenser	Ant. compensating
12	1212035	Condenser	3 gang tuning
13	1212030	Condenser	Low loss .25 mfd. 150 V.
14	1207908	Condenser	Tubular .1 mfd. 400 V.
15	1207904	Condenser	Molded .001 mfd.
16	1207908	Condenser	Tubular .1 mfd. 400 V.
17	1207625	Condenser	Molded .0005 mfd.
18	1211442	Condenser	Low loss .05 mfd. 150 V.
19	1212029	Condenser	Tubular .5 mfd. 150 V.
20,21	1212059	Condenser	Molded .00011 mfd.
22	1207908	Condenser	Tubular .1 mfd. 400 V.
23	1212029	Condenser	Low loss .5 mfd. 150 V.
24	1212028	Condenser	Low loss .25 mfd. 150 V.
25	1212059	Condenser	Molded .00011 mfd.
26	**1210275	Condenser	Molded .0001 mfd.
27	**1209055	Condenser	Molded .00025 mfd.
28	1207908	Condenser	Tubular .1 mfd. 400 V.
29	1212040	Condenser	Buffer .008 mfd. 1700 V.
30,31	1209055	Condenser	Molded .00025 mfd.
32	1211440	Condenser	Tubular .05 mfd. 200 V.
33	**1210275	Condenser	Molded .0001 mfd.
34	1212038	Condenser	Electrolytic 8-4 mfd.
35	1212099	Condenser	Tubular .02 mfd. 600 V.
36	1212044	Conbenser	Electrolytic 10 mfd. 25 V.
37	1212098	Condenser	Tubular .004 mfd. 800 V.
38	1211439	Condenser	Tubular .006 mfd. 600 V.
39	1212064	Condenser	Molded .03 mfd.
40	1207908	Condenser	Tubular .1 mfd. 400 V.
41	1212063	Resistor	Insulated 450 ohms ½ watt
42	1209883	Resistor	Insulated 100,000 ohms ½ watt
43	1209445	Resistor	Carbon 100,000 ohms ½ watt
44	1212061	Resistor	Insulated 9,500 ohms ½ watt
44	*1210834	Resistor	Insulated 10,000 ohms ½ watt
45	1210117	Resistor	Insulated 250,000 ohms ½ watt
46	1211006	Resistor	Insulated 200 ohms ½ watt
47	1209883	Resistor	Insulated 100,000 ohms ½ watt
48	1210470	Resistor	Insulated 500,000 ohms ½ watt
49	1209883	Resistor	Insulated 100,000 ohms ½ watt
50	1210116	Resistor	Insulated 50,000 ohms ½ watt
51	1210470	Resistor	Insulated 500,000 ohms ½ watt
52	1210117	Resistor	Insulated 250,000 ohms ½ watt
53	1210116	Resistor	Insulated 50,000 ohms ½ watt
54	1211060	Resistor	Insulated 4,000 ohms ½ watt
55	1210116	Resistor	Insulated 50,000 ohms ½ watt
56,57	1210117	Resistor	Insulated 250,000 ohms ½ watt
58	1211976	Speaker	8" dynamic
60	1212037	Transformer	Power
61	1212034	Transformer	Output
62	5050673	Vibrator	Plug-in
63	1212036	Control	Volume res. 500,000 ohms
64,65	1212048	Condenser	Interference "A" line

MISCELLANEOUS PARTS

1212058	Socket	Tube--octal base
7230072	Socket	Vibrator
1212052	Coupling	Condenser gang
1211609	Clip	Chassis cover grounding
1212054	Shield	Tube grid
1212079	Clip	Vibrator retaining
1212080	Plate	Trimmer condenser cover
1212087	Ring	Vibrator grounding
1212086	Case	Power transformer
1212051	Connector	"A" lead (on chassis)
1212053	Socket	Speaker
1212082	Plug	Speaker (incl. cord)
1212049	Gasket	Speaker (cardboard)
1212057	Grille	Speaker front
7231115	Socket	Tone control
7230146	Clip	Tube grid

* Used on late production.
**Replacement part.

TUBE SOCKET VOLTAGES--(Bottom View of Chassis)

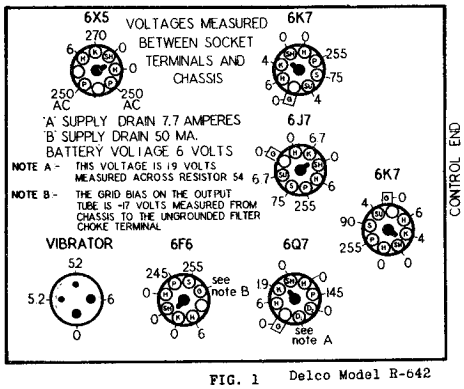

FIG. 1 Delco Model R-642

All voltage measurements made with a voltmeter having a resistance of 1000 ohms per volt.

R-640 PARTS LIST Date: 2-3-37

Illus. No.	Part No.	Part Name	Description
1	1211268	Coil assy.	Antenna
2	7231152	Coil assy.	R-F
3	7231040	Coil assy.	Oscillator
4	7230280	Coil assy.	1st I-F
5	7230281	Coil assy.	2nd I-F
6	7231151	Choke	"A' filter
7	1209897	Choke	Motor noise
8	7231386	Choke	6X5G tube filament
9	7231387	Choke	R-F "B" filter
10,11,12	7231211	Condenser	2 gang tuning
13	7231174	Condenser	1---.1 mfd. 2---.05 mfd.
14,15	1209307	Condenser	Tubular .02 mfd 200 V.
16	1207908	Condenser	Tubular .1 mfd. 400 V.
17	1209309	Condenser	Tubular .01 mfd. 400 V.
18	1209306	Condenser	Tubular .1 mfd. 400 V.
19	7231212	Condenser	Tubular .005 mfd. 600 V.
20,21	1209055	Condenser	Molded .00025 mfd.
22	7231177	Condenser	Molded .0004 mfd.
23	1207625	Condenser	Molded .00005 mfd.
24	1210275	Condenser	Molded .0001 mfd.
25	7231178	Condenser	Molded .0002 mfd.
26	7231150	Condenser	Tubular .5 mfd. 100 V.
27	7231149	Condenser	Tubular .005 mfd. 1000 V.
28	7230164	Condenser	Elect. dual 6 mfd.
29	1211006	Resistor	Insulated 200 ohms 1/4 watt
30,31	1209884	Resistor	Insulated 300,000 ohms 1/4 watt
32,33,34	1209885	Resistor	Insulated 1 megohm 1/4 watt
35	1211220	Resistor	Insulated 300 ohms 1/4 watt
36	1210881	Resistor	Insulated 60,000 ohms 1/4 watt
37	1211095	Resistor	Insulated 20,000 ohms 1/2 watt
38,39	1211041	Resistor	Insulated 1,500 ohms 1/4 watt
40	1210882	Resistor	Insulated 20,000 ohms 1/4 watt
41	*1211003	Resistor	Insulated 150 ohms 1/2 watt
42	*7231171	Resistor	Insulated 120 ohms 1/4 watt
43	1211077	Resistor	Insulated 7,500 ohms 1 watt
44,45	1210116	Resistor	Insulated 50,000 ohms 1/4 watt
46	1210470	Resistor	Insulated 500,000 ohms 1/4 watt
47	7231172	Resistor	Candohm 15,000 ohms 3 watt
48	7231214	Speaker	Dynamic
49	7231165	Transformer	Vibrator
50	7231159	Choke	"B" filter
51	7231170	Control	Volume
52	7231156	Condenser	Antenna compensating
55	7231513	Transformer	Output
56	7231223	Condenser	Tubular .03 mfd. 600 V.

MISCELLANEOUS

7231111	Grille	Case front
1211609	Clip	Cover grounding
7231283	Socket	Tube (unmarked)
7231115	Socket	Tone control lead

* Use resistors listed for replacement on first production

©John F. Rider, Publisher

UNITED MOTORS SERVICE

MODEL R-641 Delco
Schematic

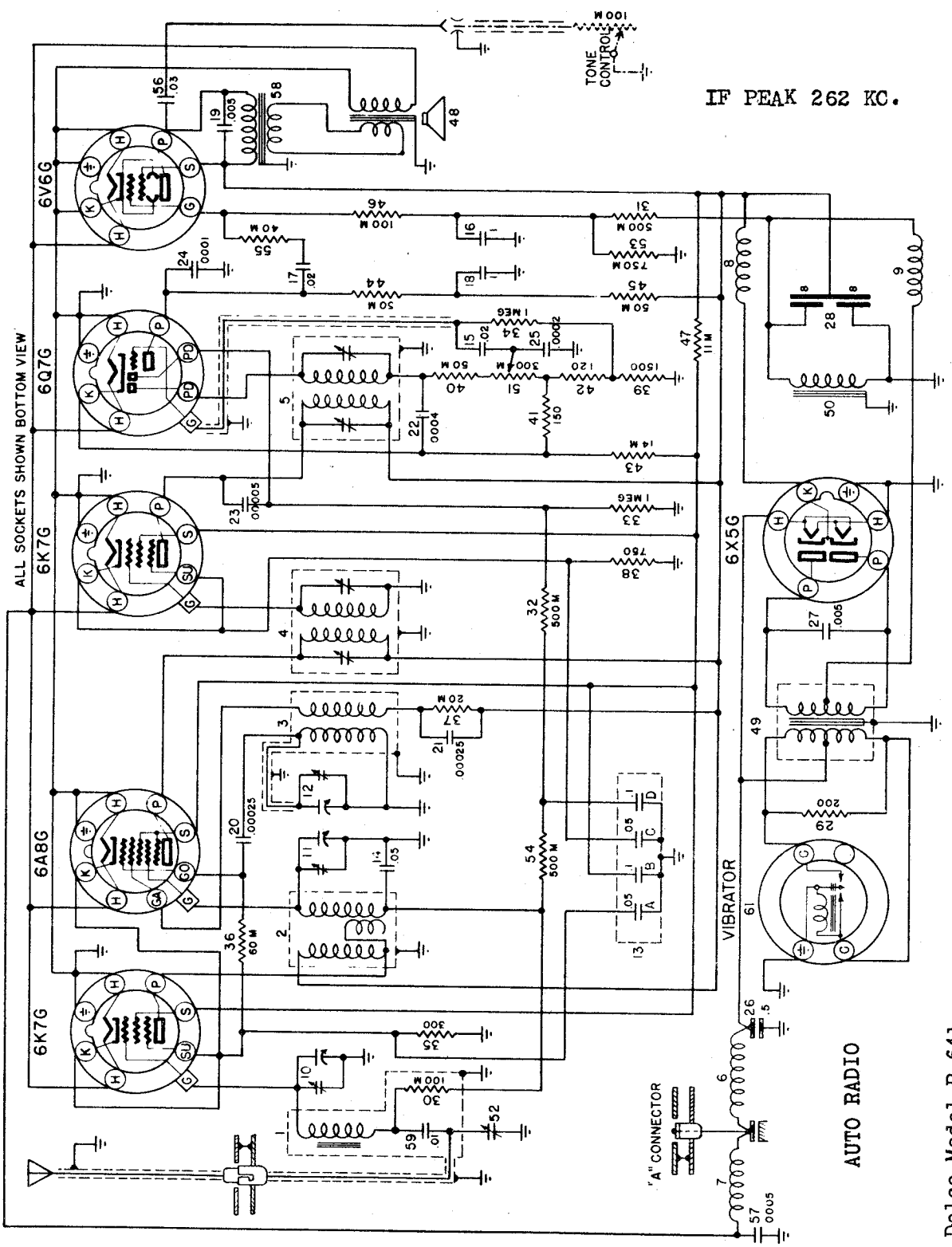

Delco Model R-641

Date: 7-1-37

AUTO RADIO

The Delco Model R-641 is a six tube, single unit auto radio, with variable tone control, non-synchronous vibrator and type 6V6G "Beam" Power Tube.

OSCILLOGRAPH CONNECTIONS

In making tests with the Cathode Ray Oscillograph, connect to black lead of 2nd I-F coil (Illus. #5) and to chassis ground.

©John F. Rider, Publisher

MODEL R-641 Delco
Socket, Trimmers
Chassis, Alignment
Voltage

UNITED MOTORS SERVICE

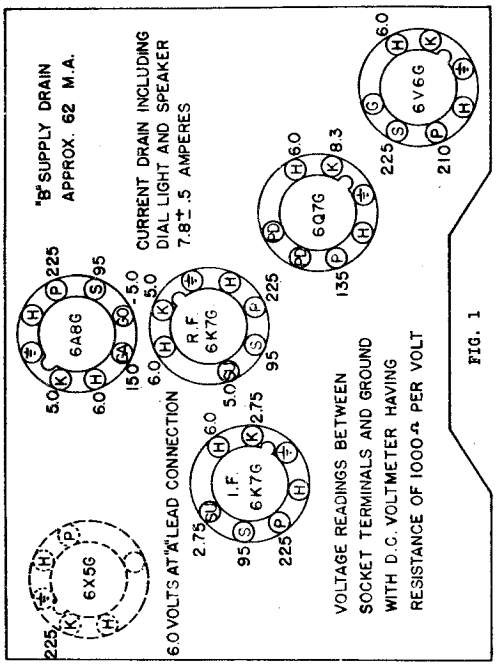

FIG. 1
(Bottom View of Chassis)

In order to prevent the A.V.C. circuit from affecting the alignment adjustments, the lowest Signal Generator output should be used, which will give a readable indication on the output meter.

All voltage measurements made with a voltmeter having a resistance of 1000 ohms per volt.

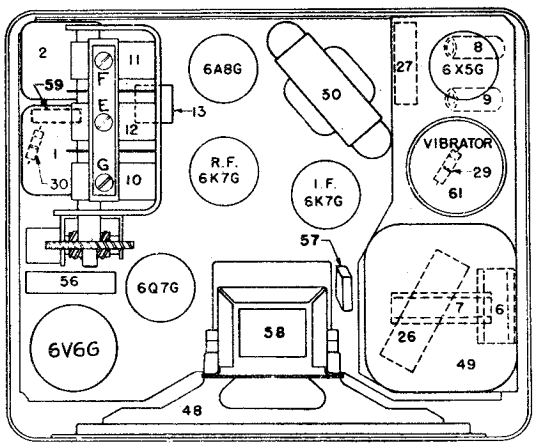

FIG. 3--PARTS LAYOUT--Top View

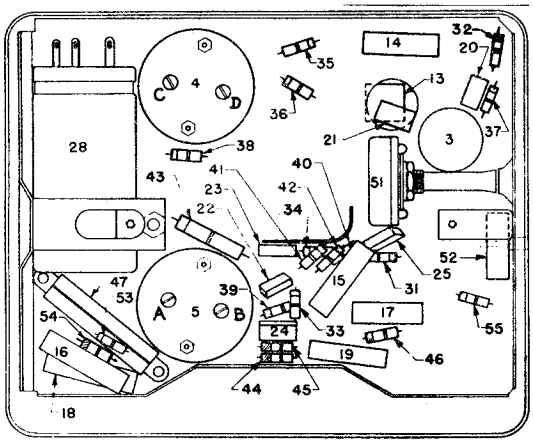

FIG. 4--PARTS LAYOUT--Bottom View

Delco Model R-641

Date: 7-1-37

Checking I-F Band Spread

The Model 165 Cathode Ray Oscillograph should be used to check the I-F band spread after completing the "Alignment Procedure". Slight adjustment of the I-F stages may be found necessary in order to obtain a symmetrical selectivity curve. Complete information concerning this check with the Oscillograph, is given in the Oscillograph Manual, included with each instrument.

1. Peaking I-F Stages at 262 Kilocycles

   (a) Connect the ground lead of the Signal Generator to the chassis case. Connect the signal lead of the Signal Generator to the grid cap of the 6A8G tube, through a .1 mfd. condenser, leaving the tube's grid clip in place.

   (b) Connect output meter from plate of 6V6G tube to ground.

   (c) Set Signal Generator to exactly 262 kilocycles and turn volume control on full.

   (d) Turn condenser gang to a position where no squeals or beat notes can be noticed, also so that when the tuning condenser is rotated within narrow limits there is no appreciable change in output.

   (e) Adjust trimmers A-B-C-D on the top of the I-F coils (Illus. 4 & 5) carefully for maximum output.

   (f) Repeat adjustments of I-F trimmers A-B-C-D with as low an output from the Signal Generator as possible, for more accurate alignment.

2. Aligning at 1530 Kilocycles

   (a) Leave Signal Generator leads connected the same as for I-F adjustments.

   (b) Turn tuning condenser plates all the way out and against high frequency stop.

   (c) Set Signal Generator to exactly 1530 kilocycles and adjust oscillator trimmer "G" on middle section of condenser gang carefully for maximum output.

3. Aligning at 1400 Kilocycles

   (a) Remove signal lead of Signal Generator from grid cap of 6A8G tube and connect to antenna terminal of receiver through a .0002 mfd. mica condenser.

   (b) Set the Signal Generator to 1400 kilocycles and tune the receiver to this signal.

   (c) Adjust the parallel trimmers "F" and "G" of the condenser gang carefully for maximum output. Do not disturb the 1530 kilocycle adjustment of the middle section of the condenser gang.

4. Aligning at 600 Kilocycles

   (a) Set Signal Generator to approximately 600 kilocycles and turn condenser gang plates until this signal is tuned in with maximum output.

   (b) Adjust Delco Syncro-Tuning condenser (Illus. 52) located on side of chassis near antenna connector, rocking gang condenser plates back and forth through the signal until maximum output is obtained. (It will be necessary to readjust this condenser to the car antenna upon installation of the set.)

   (c) Repeat adjustments made under--"Aligning at 1400 K.C.".

©John F. Rider, Publisher

UNITED MOTORS SERVICE

MODEL R-643 Delco
Schematic

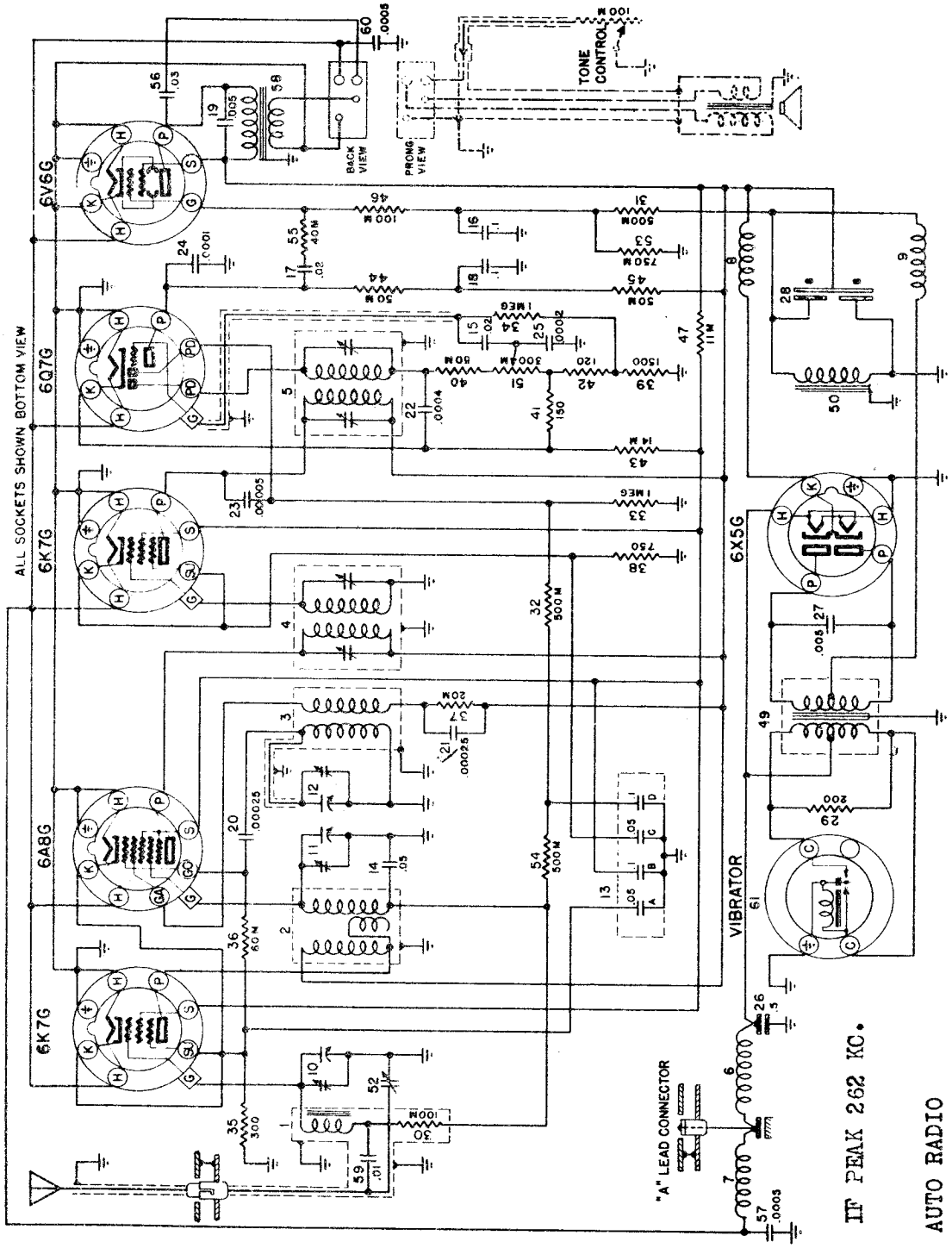

Delco Model R-643 AUTO RADIO

IF PEAK 262 KC.

The Delco Model R-643 is a six tube, external speaker auto radio, with variable tone control, non-synchronous vibrator and type 6V6G "Beam" Power Tube.

Date: 6-25-37

OSCILLOGRAPH CONNECTIONS

In making tests with the Cathode Ray Oscillograph, connect to black lead of 2nd I-F coil (Illus. #5) and to chassis ground.

©John F. Rider, Publisher

MODEL R-643 Delco
Socket, Trimmers
Chassis, Voltage
Alignment

UNITED MOTORS SERVICE

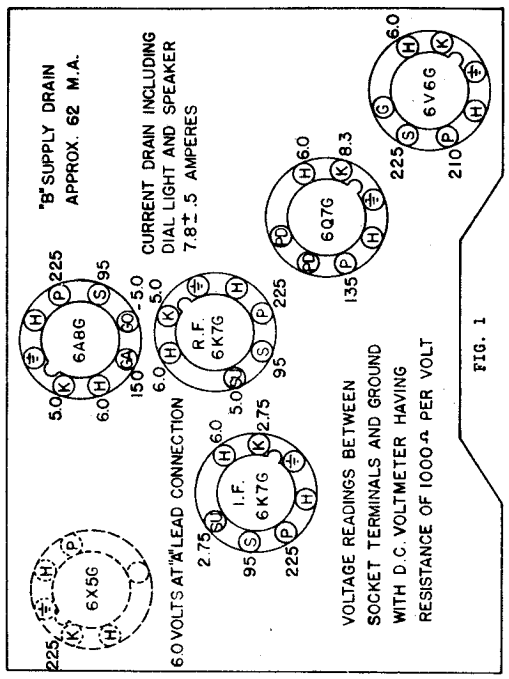

FIG. 1

(Bottom View of Chassis)

In order to prevent the A.V.C. circuit from affecting the alignment adjustments, the lowest Signal Generator output should be used, which will give a readable indication on the output meter.

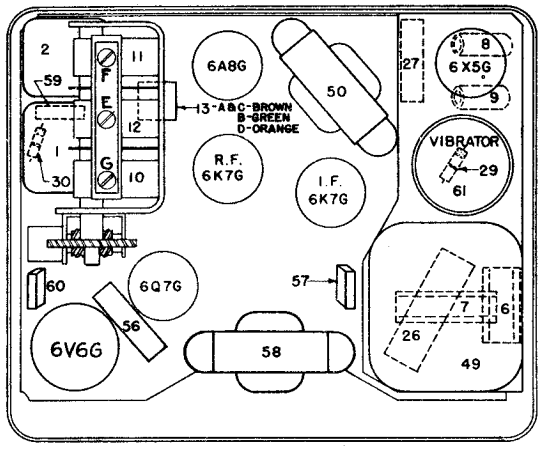

FIG. 3--PARTS LAYOUT--Top View

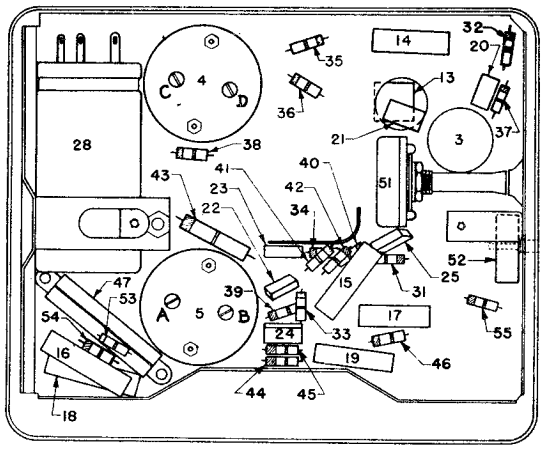

FIG. 4--PARTS LAYOUT--Bottom View

All voltage measurements made with a voltmeter having a resistance of 1000 ohms per volt.

Delco Model R-643

Checking I-F Band Spread — Date: 6-25-37

The Model 165 Cathode Ray Oscillograph should be used to check the I-F band spread after completing the "Alignment Procedure". Slight adjustment of the I-F stages may be found necessary in order to obtain a symmetrical selectivity curve. Complete information concerning this check with the Oscillograph, is given in the Oscillograph Manual, included with each instrument.

1. Peaking I-F Stages at 262 Kilocycles

   (a) Connect the ground lead of the Signal Generator to the chassis case. Connect the signal lead of the Signal Generator to the grid cap of the 6A8G tube, through a .1 mfd. condenser, leaving the tube's grid clip in place.

   (b) Connect output meter from plate of 6V6G tube to ground.

   (c) Set Signal Generator to exactly 262 kilocycles and turn volume control on full.

   (d) Turn condenser gang to a position where no squeals or beat notes can be noticed, also so that when the tuning condenser is rotated within narrow limits there is no appreciable change in output.

   (e) Adjust trimmers A-B-C-D on the top of the I-F coils (Illus. 4 & 5) carefully for maximum output.

   (f) Repeat adjustments of I-F trimmers A-B-C-D with as low an output from the Signal Generator as possible, for more accurate alignment.

2. Aligning at 1530 Kilocycles

   (a) Leave Signal Generator leads connected the same as for I-F adjustments.

   (b) Turn tuning condenser plates all the way out and against high frequency stop.

   (c) Set Signal Generator to exactly 1530 Kilocycles and adjust oscillator trimmer "G" on middle section of condenser gang carefully for maximum output.

3. Aligning at 1400 Kilocycles

   (a) Remove signal lead of Signal Generator from grid cap of 6A8G tube and connect to antenna terminal of receiver through a .0002 mfd. mica condenser.

   (b) Set the Signal Generator to 1400 kilocycles and tune the receiver to this signal.

   (c) Adjust the parallel trimmers "F" and "G" of the condenser gang carefully for maximum output. Do not disturb the 1530 kilocycle adjustment of the middle section of the condenser gang.

4. Aligning at 600 Kilocycles

   (a) Set Signal Generator to approximately 600 kilocycles and turn condenser gang plates until this signal is tuned in with maximum output.

   (b) Adjust Delco Syncro-Tuning condenser (Illus. 52) located on side of chassis near antenna connector, rocking gang condenser plates back and forth through the signal until maximum output is obtained. (It will be necessary to readjust this condenser to the car antenna upon installation of the set.)

   (c) Repeat adjustments made under--"Aligning at 1400 KC.

©John F. Rider, Publisher

UNITED MOTORS SERVICE

MODEL R-644 Delco
Schematic

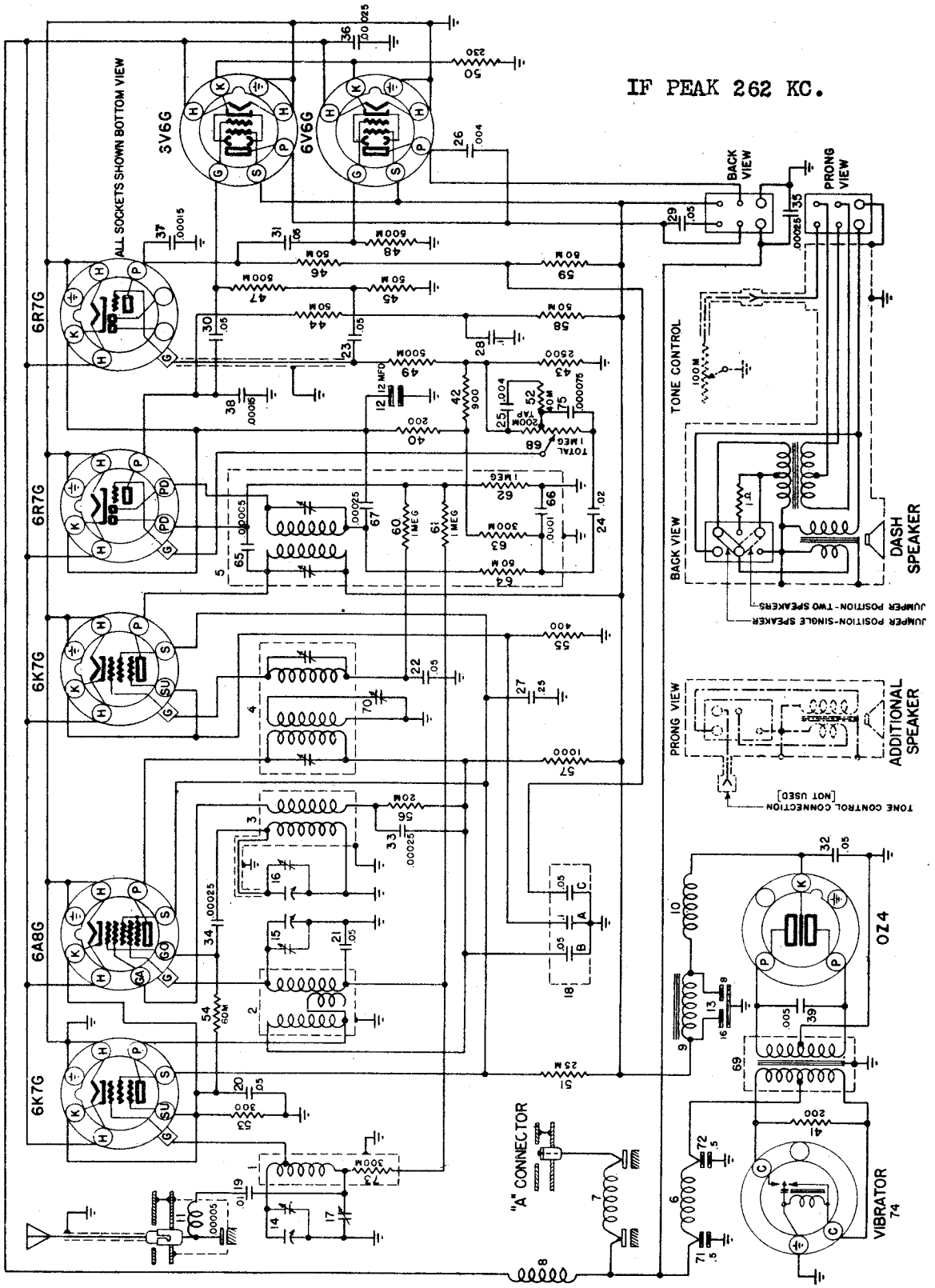

AUTO RADIO

Delco Model R-644

Date: 6-11-37

An extra socket is provided on the dash speaker for plugging in an additional speaker for two speaker operation.

The Delco Model R-644 is an 8 tube, dash speaker auto radio, with bass compensation, octal base tubes and tone control. Two of the new 6V6G "Beam" power tubes are used in the output stage.

©John F. Rider, Publisher

MODEL R-644 Delco
Socket, Trimmers
Chassis, Voltage
Alignment

UNITED MOTORS SERVICE

Date: 6-11-37

In order to prevent the A.V.C. circuit from affecting the alignment adjustments, the lowest Signal Generator output should be used, which will give a readable indication on the output meter for all adjustments.

FIG. 3--PARTS LAYOUT--Top View

FIG. 4--PARTS LAYOUT--Bottom View

Delco Model R-644

Checking I-F Band Spread

The Model 165 Cathode Ray Oscillograph should be used to check the I-F band spread after completing the "Alignment Procedure". Slight adjustments to the I-F stages may be found necessary in order to obtain a symmetrical selectivity curve. Complete information concerning this check with the Oscillograph, is given in the Oscillograph Manual, included with each instrument. In connecting the Oscillograph to the R-644, connect to white lead from bottom of 2nd I-F Coil (Illus. #5) and to chassis frame.

1. Peaking I-F Stages at 262 Kilocycles

(a) Connect the ground lead of the Signal Generator to the chassis case. Connect the signal lead of the Signal Generator to the grid cap of the 6A8G tube, through a .1 mfd. condenser, leaving the tube's grid clip in place.

(b) Connect output meter across plates of 6V6G output tubes. (If an A.C. meter is available having a full scale range of 4 volts or less, it can be connected directly across the voice coil connection on the speaker socket provided on the dash speaker for an additional speaker.)

(c) Set Signal Generator to exactly 262 kilocycles and turn volume control on full.

(d) Turn condenser gang to a position where no squeals or beat notes can be noticed, also so that when the tuning condenser is rotated within narrow limits there is no appreciable change in output.

(e) Adjust trimmers A-B-C-D on the top of the I-F coils (Illus. 4 & 5) carefully for maximum output.

(f) Adjust I-F trimmer "E" located on chassis sub-panel carefully for maximum output.

(g) Repeat adjustments of I-F trimmers A-B-C-D-E with as low an output from the Signal Generator as possible, for more accurate alignment.

2. Aligning at 1530 Kilocycles

(a) Leave Signal Generator leads connected the same as for I-F adjustments.

(b) Turn tuning condenser plates all the way out and against high frequency stop.

(c) Set Signal Generator to exactly 1530 kilocycles and adjust oscillator trimmer on middle section of condenser gang carefully for maximum output.

3. Aligning at 1400 Kilocycles

(a) Remove signal lead of Signal Generator from grid cap of 6A8G tube and connect to antenna terminal of receiver through a .0002 mfd. mica condenser.

(b) Set the Signal Generator to 1400 kilocycles and tune the receiver to this signal.

(c) Adjust the parallel trimmers on the top and bottom sections of the condenser gang carefully for maximum output. Do not disturb the 1530 kilocycle adjustment of the middle section of the condenser gang.

4. Aligning at 600 Kilocycles

(a) Set Signal Generator to approximately 600 kilocycles and turn condenser gang plates until this signal is tuned in with maximum output.

(b) Adjust Delco Syncro-Tuning condenser (Illus. #17) located on side of chassis near antenna connector, rocking gang condenser plates back and forth through the signal until maximum output is obtained. (It will be necessary to readjust this condenser to the car antenna upon installation of the set.) (c) Repeat adjustments "Aligning at 1400 K.C.".

©John F. Rider, Publisher

UNITED MOTORS SERVICE

MODEL R-1115 Delco
Below Ser.100,000
Socket, Voltage
Schematic

*NOTE: On early production run, condenser #17 was returned to ground

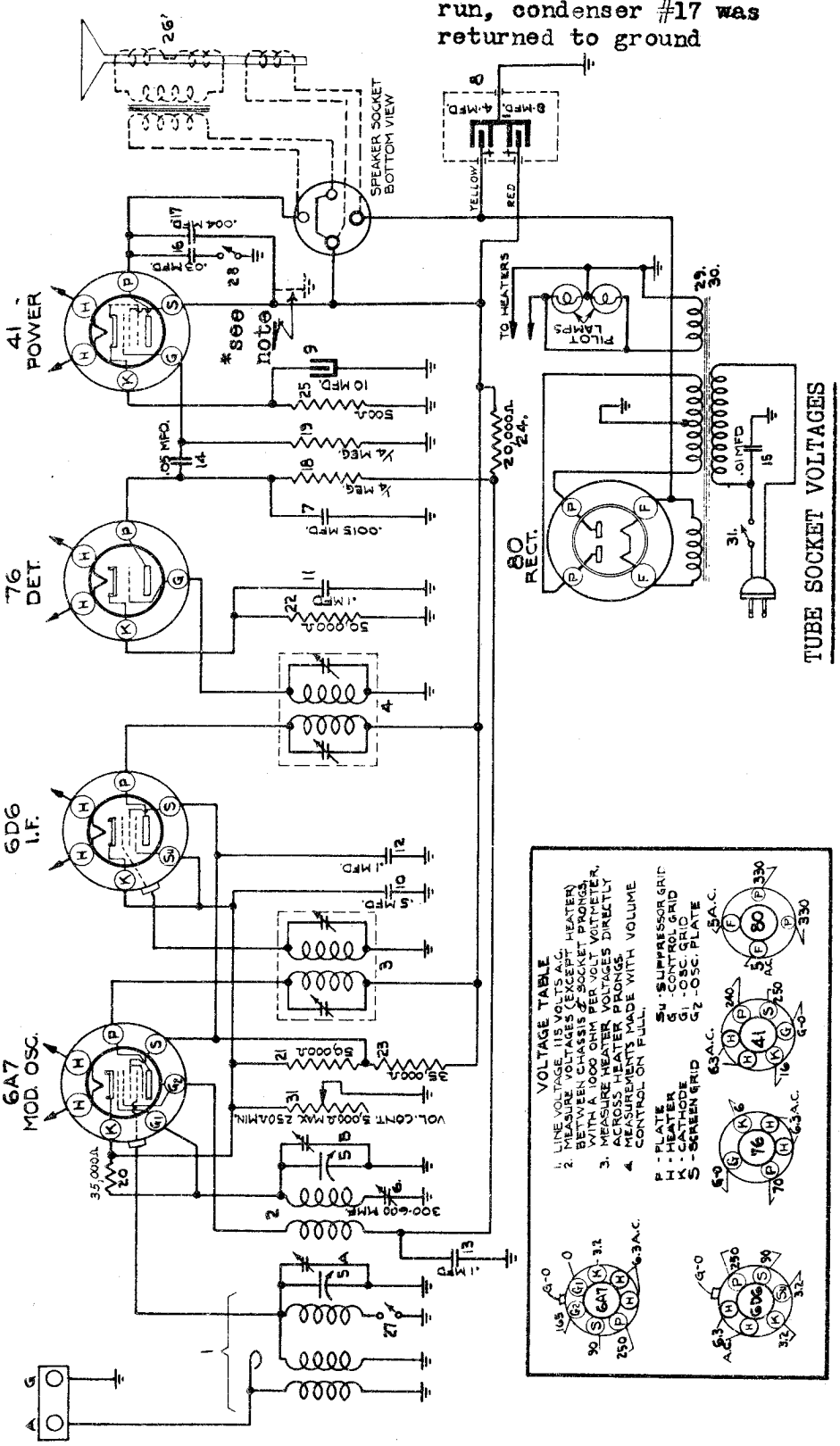

TUBE SOCKET VOLTAGES

Tube	Function	H	P	S	SU	G1	G2	K
6A7	Osc.-Mod.	6.3	250	90	-	0	165	3.2
6D6	I-F Amp.	6.3	250	90	3.2	-	-	3.2
76	Det.	6.3	70	-	-	-	-	6.0
41	Output	6.3	240	250	-	-	-	16.0
80	Rectifier	5.0	*	-	-	-	-	-

Readings taken from tube socket contacts to chassis ground (except filament with a 1000 ohm per volt D.C. meter, using a line voltage of 115 volts
*A.C. Voltage--330

I.F.-465 K.C.

Delco Model R-1115

Date: 9-3-36

©John F. Rider, Publisher

MODEL R-1115 Delco
Below Ser.100,000
Socket,Trimmers
Chassis,Alignment

UNITED MOTORS SERVICE

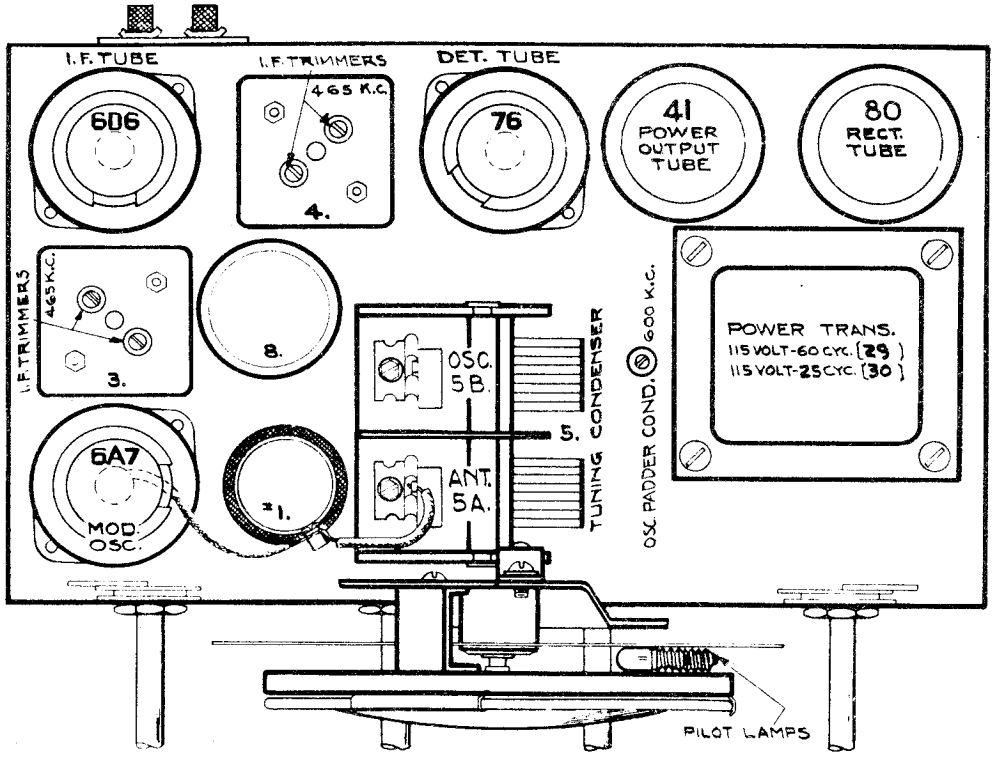

PARTS LAYOUT--Top View

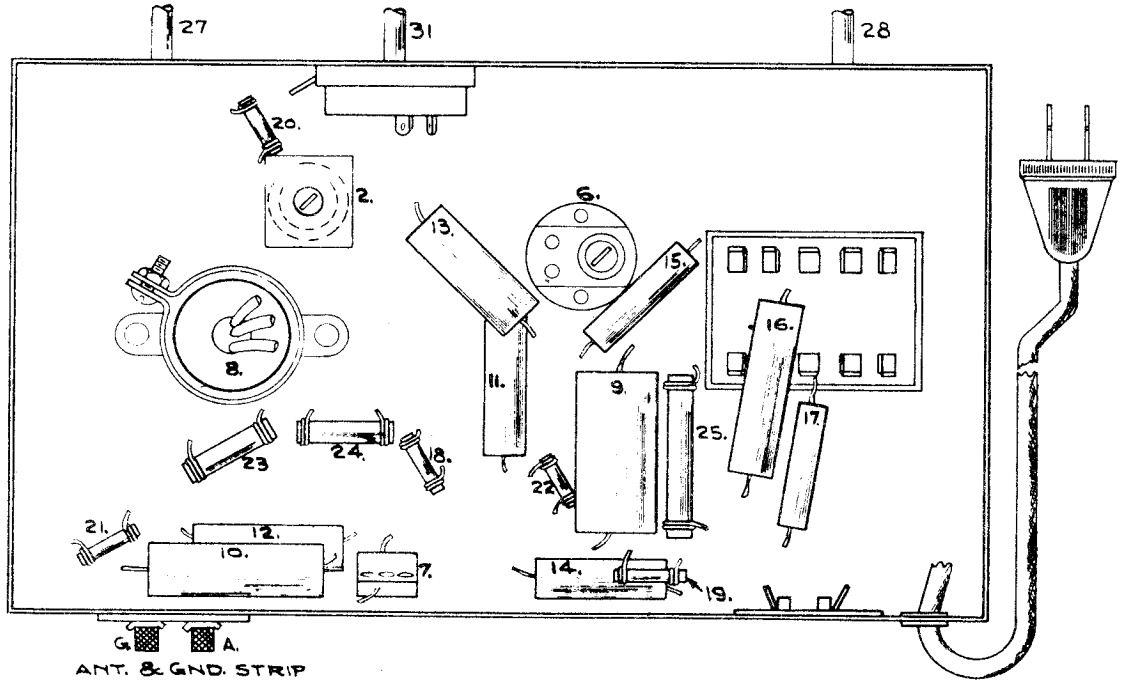

-PARTS LAYOUT--Bottom View

CONVENTIONAL ALIGNMENT
SEE SPECIAL SECTION VOL. VIII.

ALIGNMENT

Connect gen. to 6A7 tube thru .02 mf cond. Gen. at 465 kc, peak 2nd IF trimmers on unit desig. 4, and then 1st IF trimmers on unit #3. Gen. at 1720 kc, peak osc. gang cond. trimmer desig. #5B. Gen. and dial at 1400 kc, peak ant. gang cond. trimmer desig. 5A. Gen. and dial at 600 kc, rock var. cond. and peak osc. padder. No adj. necessary on the 2.3 to 2.5 MC Police Band.

©John F. Rider, Publisher

UNITED MOTORS SERVICE

MODEL R-1115 Delco
Above Ser.100,000
Schematic, Socket
Trimmers, Chassis
Voltage, Alignment

FREQUENCY RANGES -
1730 to 525 KC
2.3 to 2.6 MC

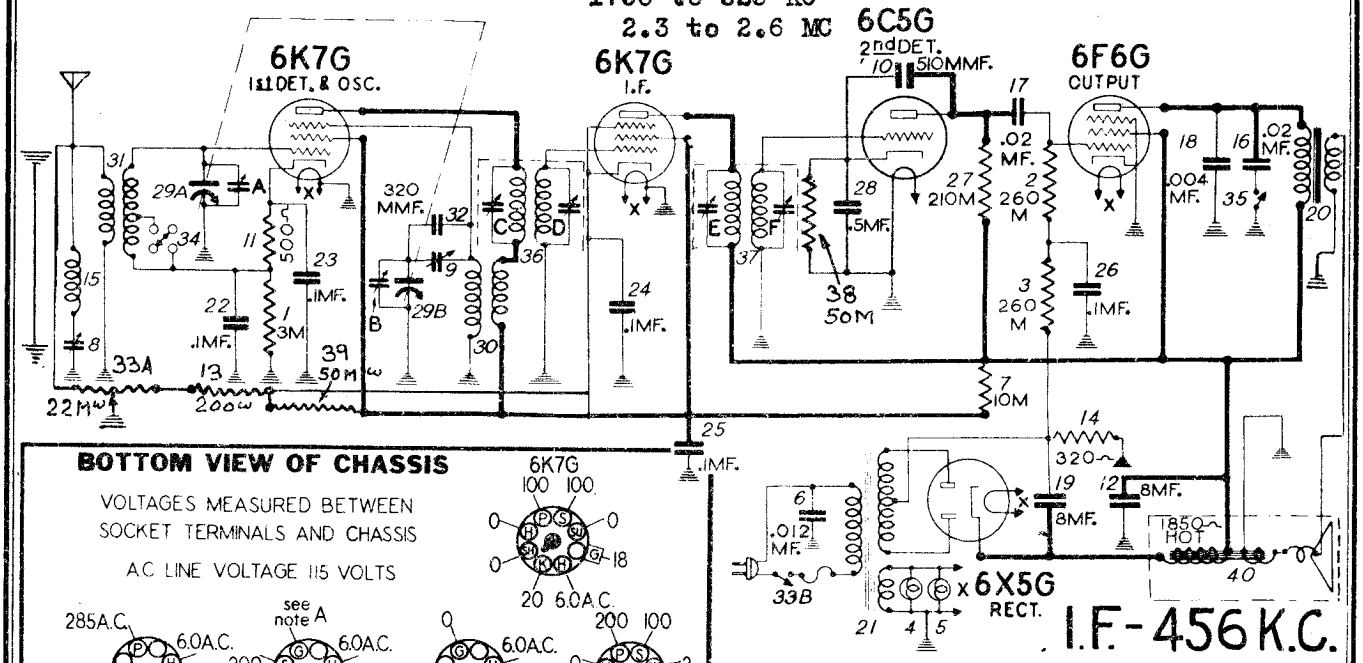

BOTTOM VIEW OF CHASSIS

VOLTAGES MEASURED BETWEEN SOCKET TERMINALS AND CHASSIS

A.C. LINE VOLTAGE 115 VOLTS

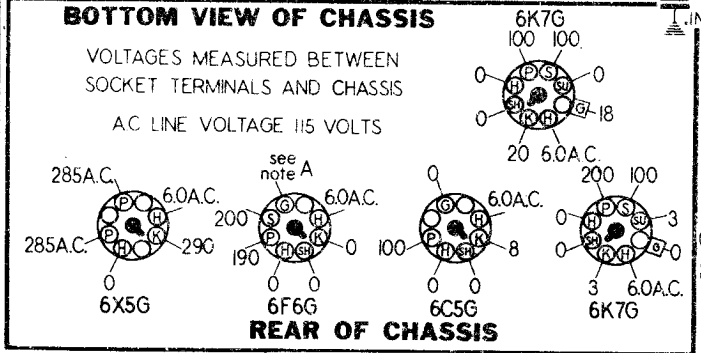

I.F. - 456 K.C.

CONVENTIONAL ALIGNMENT SEE SPECIAL SECTION VOLUME VIII
NO ADJUSTMENTS REQUIRED ON THE SHORTWAVE BAND

MODEL R-1115
1-18-37.

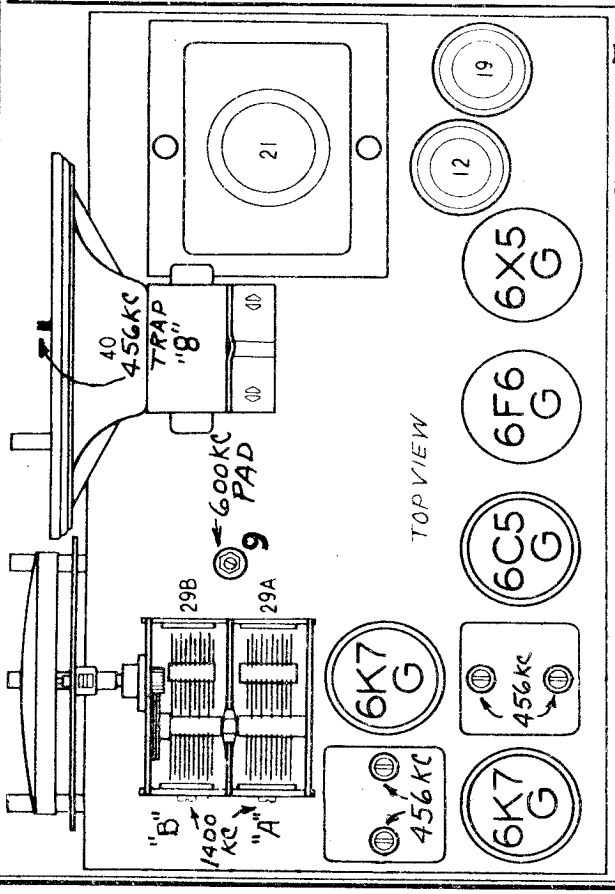

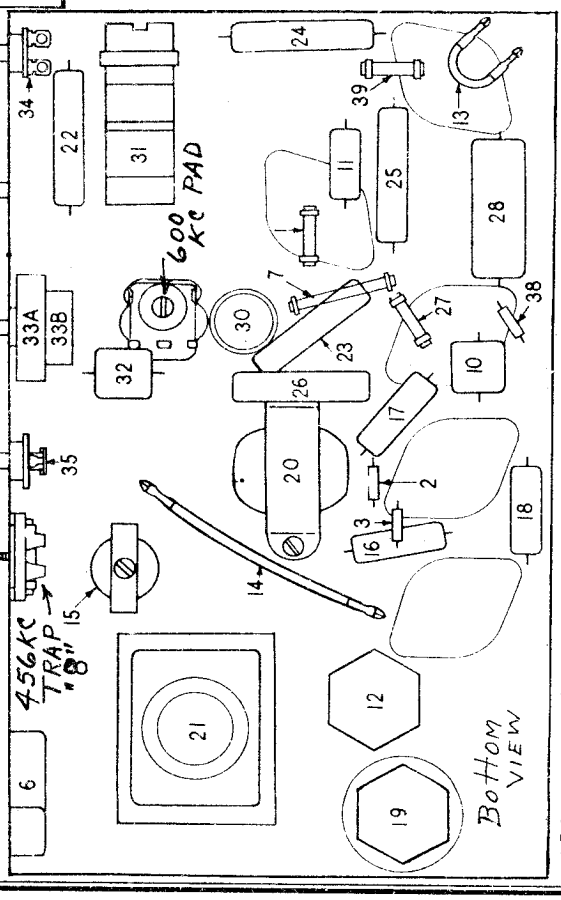

Align I-F trimmers at 456 KC. BROADCAST - Dial and Generator at 1400 KC, peak trimmers "B" & "A". Dial and generator at 600 KC, pad trimmer No. 9, while rocking gang condenser. Adjust wave trap at 456 KC peak.

©John F. Rider, Publisher

MODEL R-3210 Delco
Schematic, Socket, Trimmers
Chassis, Voltage, Alignment

UNITED MOTORS SERVICE

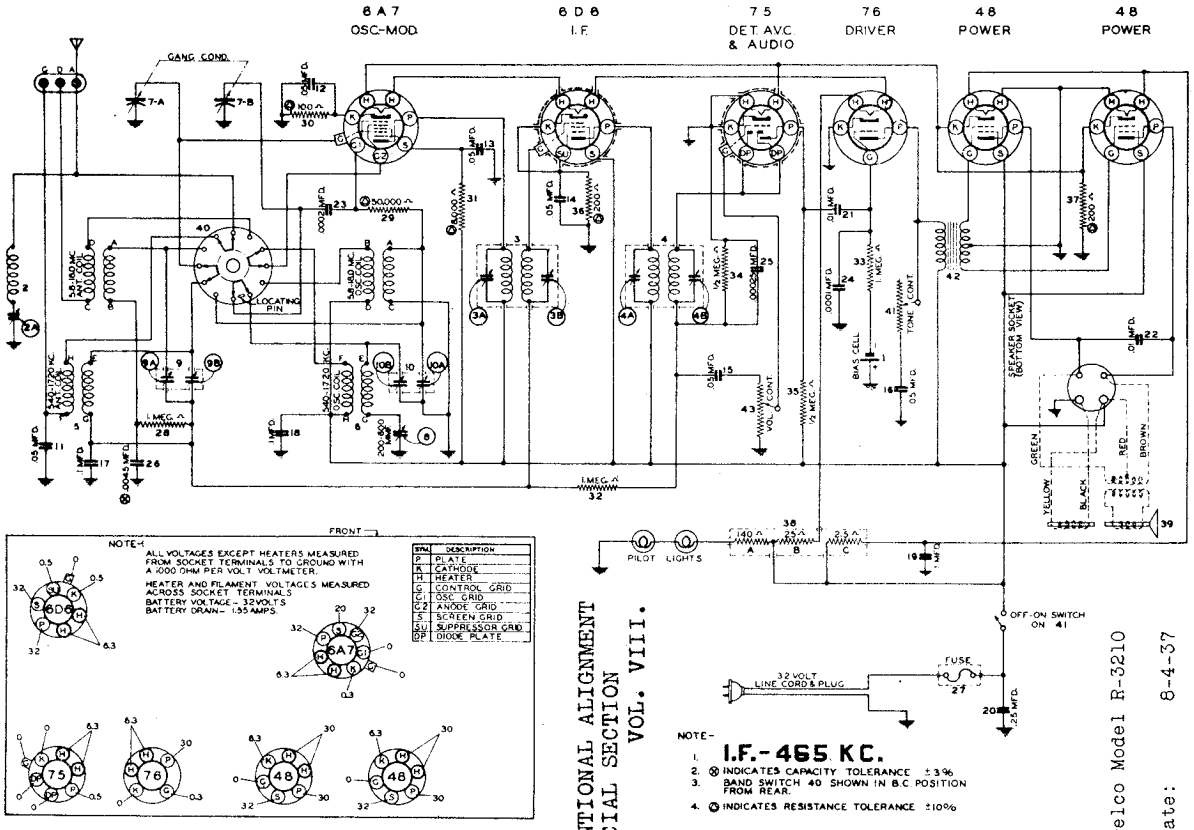

CONVENTIONAL ALIGNMENT
SEE SPECIAL SECTION
VOL. VIII.

Delco Model R-3210 Date: 8-4-37

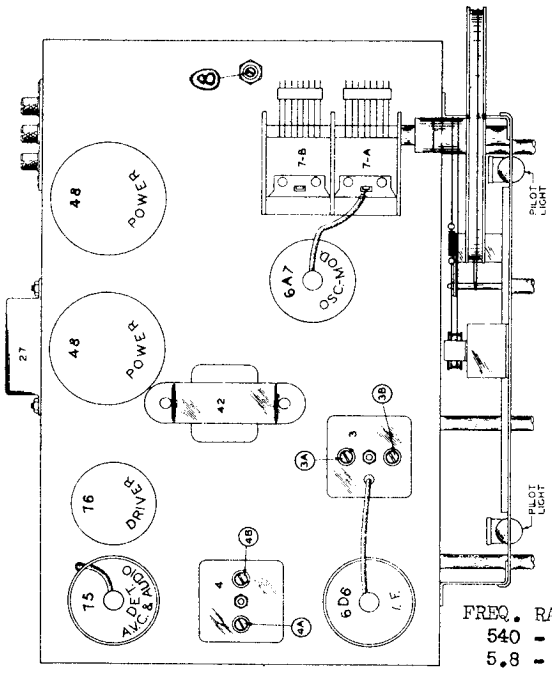

FIG. 2--PARTS LAYOUT--Top View

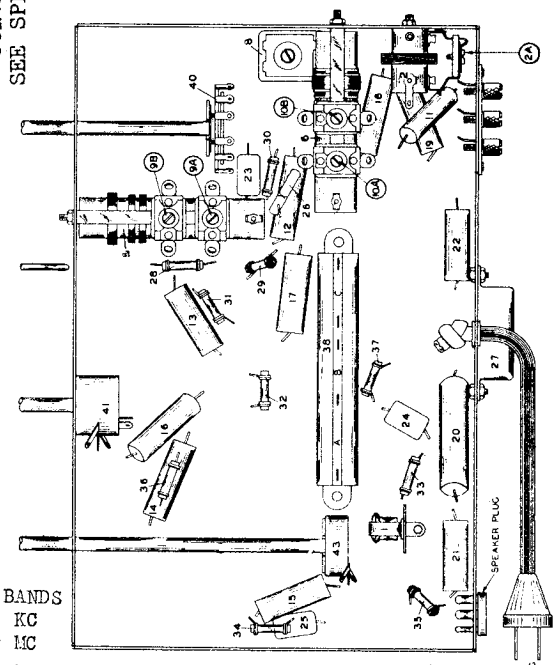

FIG. 3--PARTS LAYOUT--Bottom View

Adjust IF Trimmers 4A, 4B, 3A, 3B, at 465 KC (Do not remove control-grid clip from 6A7) Adjust wave trap "2A" at 465 KC. Adjust BC Osc Trimmer, 10B, at 1720KC & BC Ant. Trimmer 9B, at 1400 KC. Adjust BC Osc. Series Padder "8" at 600 KC (while rocking variable condenser). Adjust S W Osc. Trimmer "10A" at 18MC and Ant. Trimmer "9A" at 15 MC (while rocking variable condenser). Dummy Antenna, IF- .02 Mfd., Wave Trap, RF, & SW. - .00025.

©John F. Rider, Publisher

UNITED MOTORS SERVICE

MODELS R1116,R1117 Delco Schematic,Socket,Chassis Trimmers,Voltage,Transf. Phono.Connections

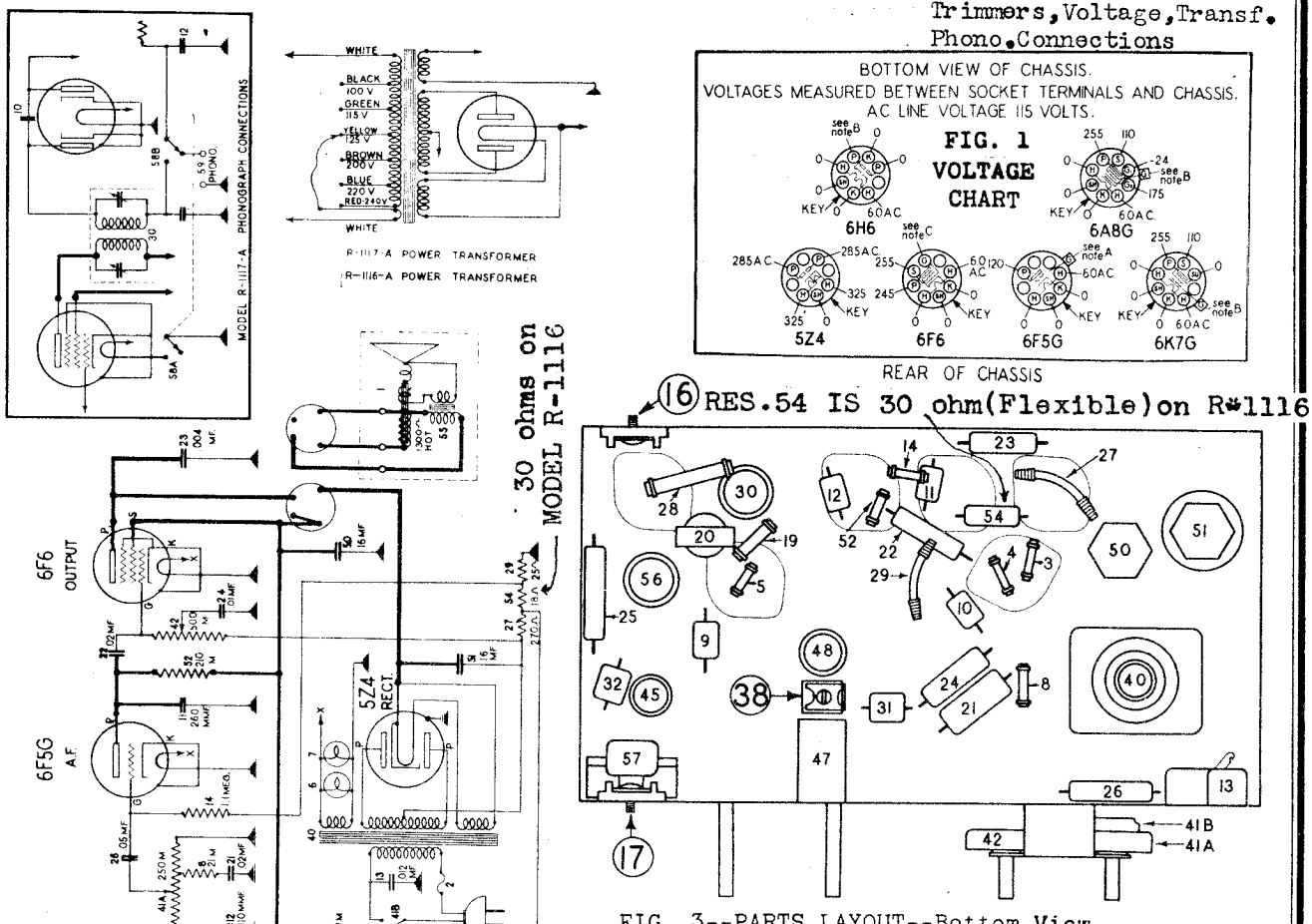

FIG. 3--PARTS LAYOUT--Bottom View

FIG. 2--PARTS LAYOUT--Top View

FIG. 4--PARTS LAYOUT--Front View

©John F. Rider, Publisher

The receiver should be aligned in a location free from local interference (interference caused by motors, flashers, automobile ignition, etc.) as high frequency disturbances will cause difficulties in adjusting the short wave circuits.

DIAL SETTING CHECK: Turn the tuning knob until the rotor plates of the condenser gang are fully meshed. The dial pointer should be on the white horizontal line below 530 K.C. on the dial. This check should be made before attempting any trimmer adjustments.

1. Peaking I-F Stages at 456 Kilocycles

(a) Connect the signal lead of the test oscillator to the grid cap of the 6A8G tube through a .1 or .25 mfd. condenser. DO NOT REMOVE THE GRID CLIP FROM THE TUBE.

(b) Connect the ground lead of the test oscillator to the receiver chassis.

(c) Place the test oscillator in operation at 456 K.C.

(d) Change the band switch to the broadcast position (fully clockwise).

(e) Set the receiver dial pointer to any position where it has no tuning effect on the I-F signal from the oscillator.

(f) Turn the receiver volume control to the maximum position.

(g) Adjust the four I-F trimmers A, B, C & D on the two I-F coils Illus. 30 and 56 (Fig. 2) carefully for maximum output in the following sequence--A-B-C-D. Then repeat the four trimmer adjustments During alignment, maintain as low a signal output from the test oscillator as is consistent with obtaining at least half scale indication on the output meter.

2. Aligning at 1500 Kilocyles (Broadcast Band)

(a) Connect the signal lead of the test oscillator to the antenna terminal on the chassis through a 400 or 500 ohm carbon resistor. Leave test oscillator ground lead connected to the receiver chassis.

(b) Place test oscillator in operation at 1500 K.C.

(c) Turn dial pointer to 1500 K.C. setting.

(d) Adjust the Broadcast Band oscillator parallel condenser, Illus. 36 (Fig. 4) to maximum output.

(e) Adjust the Broadcast Band detector parallel trimmer, Illus. 33 (Fig. 2) to maximum output.

(f) Adjust the Broadcast Band antenna parallel trimmer, Illus. "E" (Fig. 2) to maximum output.

3. Aligning at 600 Kilocycles (Broadcast Band)

(a) Place test oscillator in operation at 600 K.C.

(b) Tune in the 600 K.C. test oscillator with the receiver dial for maximum output. (This point does not have to be exactly at the 600 K.C. dial setting.)

(c) Adjust the Broadcast Band oscillator tracking condenser, Illus. 17 (Fig. 2) while rocking the tuning condenser plates back and forth through resonance until no further increase in output can be obtained.

(d) Repeat operations under paragraph #2 "Aligning at 1500 Kilocycles" for accurate adjustments.

4. Adjusting the Wave Trap

(a) Place test oscillator in operation at 456 K.C. but leave it connected to the antenna terminal through a carbon resistor.

(b) Set the receiver dial pointer to any position where it has no tuning effect on the 456 K.C. signal.

(c) Adjust the wave trap trimmer, Illus. 16 (Fig. 2) for MINIMUM output, increasing the oscillator output as necessary to obtain a clearly defined point of minimum output.

5. Aligning at 5 Megacycles (5000 K.C. Police Band)

(a) Place test oscillator in operation at 5 megacycles.

(b) Turn dial pointer to 5 megacycles and turn band change switch to the Police Band (center position).

(c) Adjust the Police Band oscillator parallel trimmer, Illus. 37 (Fig. 4) for maximum output. If there are two peaks, the proper one is with the trimmer screw farthest out (less capacity).

(d) Adjust the Police Band antenna parallel trimmer, Illus. 34 (Fig. 2) to maximum output. Then try to increase the output by detuning the trimmer slightly and retuning the receiver dial. If this causes the output to go down, detune the trimmer in the opposite direction. Continue detuning the trimmer and retuning the receiver dail until maximum output meter deflection is secured.

Aligning at 16 Megacycles (16000 KC Foreign Band)

(a) Place the test oscillator in operation at 16 megacycles.

(b) Turn dial pointer to 16 megacycles and turn band change switch to the Foreign Band (fully counter-clockwise).

(c) Adjust the Foreign Band oscillator parallel trimmer, Illus. 38 (Fig. 3) to maximum output. Check to see if it has been adjusted to the proper peak by tuning the receiver to approximately 15.1 megacycles. A repeat signal should be heard at this point. If none is present, even with greatly increased oscillator output, retune the receiver to 16 M.C. and adjust the trimmer, Illus. 38, to the proper peak with the trimmer screw farther out (less capacity).

(d) Adjust the Foreign Band antenna trimmer, Illus. 35 (Fig. 2) to maximum output. Then try to increase the output by detuning the trimmer slightly and retuning the dial until a maximum output meter deflection is secured.

(e) Check the adjustment by tuning the receiver to the image at about 15.1 M.C. The image should be much weaker than the 16 M.C. signal. If the image is equal to or stronger than the 16 M.C. signal, trimmer Illus. 35 is not at the proper peak. Turn the trimmer in a turn or so, then readjust as above.

NOTES ON TUBE SOCKET VOLTAGES

A bottom view of the receiver chassis is shown in Fig. 1 (Circuit Diagram) on which the voltages at each of the tube socket contacts are indicated. These readings were made with a D.C. voltmeter having a resistance of 1000 ohms per volt.

NOTE A: The grid bias for the 6F5G is--1.5 volts measured across resistor 29.

NOTE B: The grid bias for the 6A8G, 6K7G, and the anode voltage of the A.V.C. section of the 6H6 is--3.5 volts measured across resistors 29 and 54.

NOTE C: The grid bias for the 6F6 output tube is--19.5 volts measured across resistors 29, 54 and 27.

NOTE D: Target voltage for the 6G5 tuning eye is 255 volts.-DELCO MODEL R-1117

FREQ.-RANGE BANDS

AMER.BROADCAST (YELLOW)	525-1780 KC.
POLICE & AMATEUR (GREEN)	1750-5600 KC
FOR.SHORT-WAVE (RED)	5.5 - 18 MC

Delco Model R-1116

Date: 9-3-36

Delco Model R-1117

Date: 9-8-36

©John F. Rider, Publisher

UNITED MOTORS SERVICE

MODEL R1118 Delco
Schematic, Chassis
Voltage, Changes

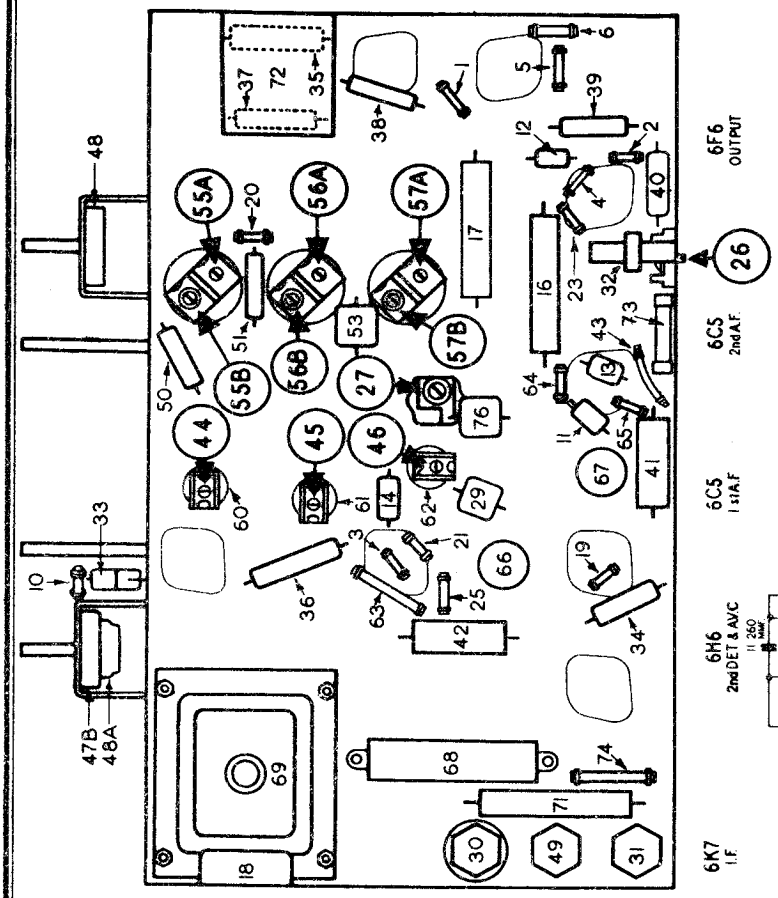

FIG. 3--PARTS LAYOUT-Bottom View

Note A: 2.6 volts measures across resistor #43.

Note B: On sets below serial #415,215, the lead indicated by "Note B" was bypassed directly to ground through the .05 mfd. condenser Illus. #51, and condenser #78 and resistor #79 were not used.

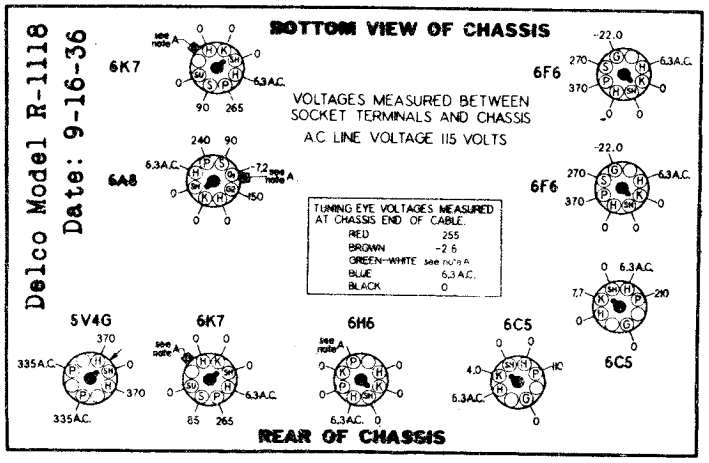

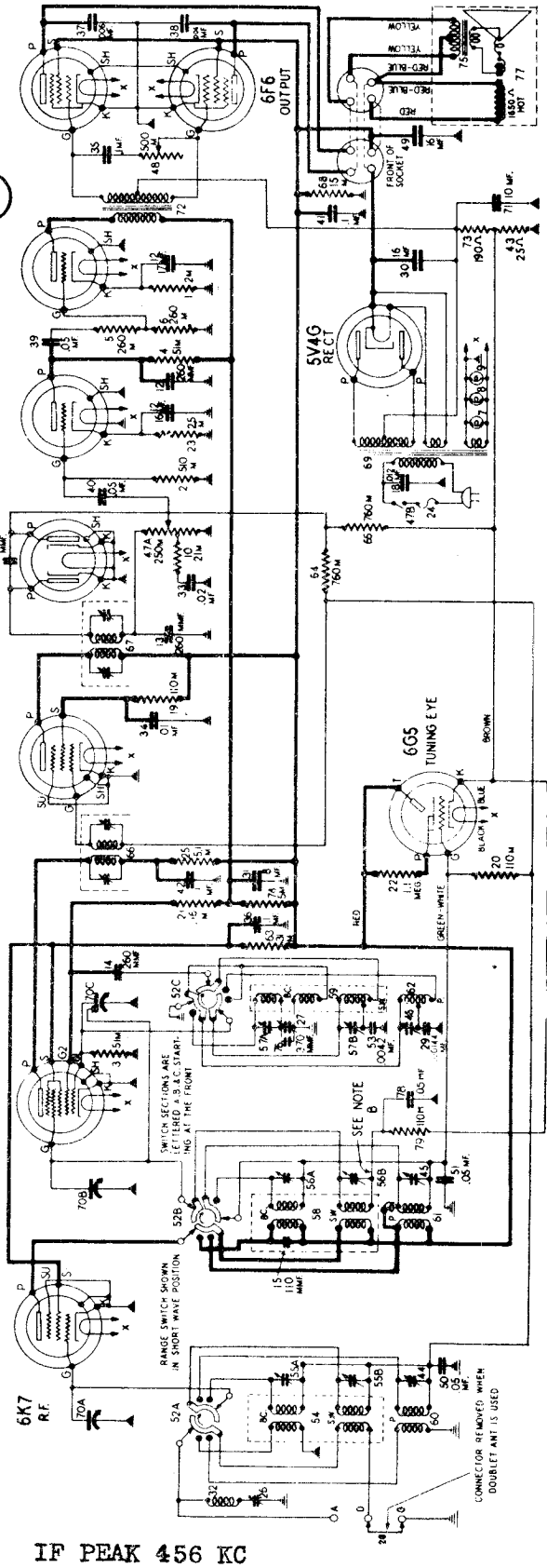

IF PEAK 456 KC

©John F. Rider, Publisher

MODEL R1118 Delco
Socket, Trimmers
Alignment, Notes

UNITED MOTORS SERVICE

The receiver should be aligned in a location free from local interference (interference caused by motors, flashers, automobile ignition, etc.) as high frequency disturbances will cause difficulties in adjusting the short wave circuits.

DIAL SETTING CHECK: Turn the tuning knob until the rotor plates of the condenser gang are fully meshed. The slow moving dial pointer should then coincide with the low frequency end of the dial scale. This check should be made before attempting any trimmer adjustments.

1. Peaking I-F Stages at 456 Kilocycles

(a) Connect the signal lead of the test oscillator to the grid cap of the 6A8 tube through a .1 or .25 mfd. condenser. DO NOT REMOVE THE GRID CLIP FROM THE TUBE.

(b) Connect the ground lead of the test oscillator to the receiver chassis.

(c) Place the test oscillator in operation at 456 KC.

(d) Change the band switch to the broadcast position (fully clockwise)

(e) Set the receiver dial pointer to any position where it has no tuning effect on the I-F signal from the oscillator.

(f) Turn the receiver volume control to the maximum position.

(g) Adjust the four I-F trimmers A, B, C and D on the two I-F coils, Illus. #66 and #67 (Fig. 2) carefully for maximum output in the following sequence--A-B-C-D. Then repeat the four trimmer adjustments. During alignment, maintain as low a signal output from the test oscillator as is consistent with obtaining at least half scale indication on the output meter.

2. Adjusting the Wave Trap

(a) Leave test oscillator in operation at 456 KC, but connect the oscillator output to the "A" and "G" terminals of the receiver with a 400 or 500 ohm carbon resistor in series with the "A" terminal and the oscillator signal lead.

(b) Set the receiver dial pointer to any position where it has no tuning effect on the 456 KC signal.

(c) Adjust the wave trap trimmer, Illus. #26 (Fig. 3) for MINIMUM output, increasing the oscillator output as necessary to obtain a clearly defined point of minimum output. If some particular station with a frequency near 456 KC causes code interference, it may be desirable to adjust the wavetrap on the actual frequency of the interfering station.

3. Aligning at 1500 Kilocycles (Broadcast Band)

(a) Leave the signal lead of the test oscillator connected to the antenna terminal on the chassis through a 400 or 500 ohm carbon resistor. Leave test oscillator ground lead connected to the receiver chassis.

(b) Place test oscillator in operation at 1500 KC.

(c) Turn receiver dial pointer to 1500 KC setting.

(d) Adjust the Broadcast Band oscillator parallel trimmer, Illus. #57A (Fig. 3) to maximum output.

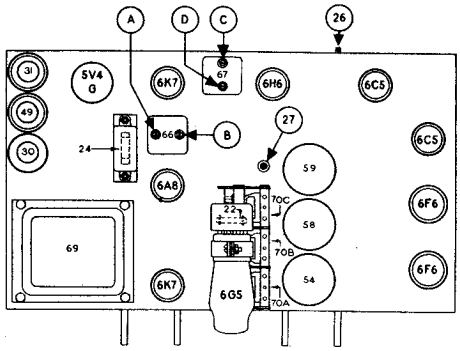

FIG. 2--PARTS LAYOUT--Top View

Delco Model R-1118 9-16-36
Date:

(e) Adjust the Broadcast Band detector parallel trimmer, Illus. #56A (Fig. 3) to maximum output.

(f) Adjust the Broadcast Band antenna parallel trimmer, Illus. #55A (Fig. 3) to maximum output.

4. Aligning at 600 Kilocycles (Broadcast Band)

(a) Place test oscillator in operation at 600 KC.

(b) Tune in the 600 KC test oscillator signal with the receiver dial for maximum output. (This point does not have to be exactly at the 600 KC dial setting.)

(c) Adjust the Broadcast Band oscillator tracking condenser, Illus. #27 (Fig. 3) while rocking the tuning condenser plates back and forth through resonance until no further increase in output can be obtained.

(d) Repeat operations under paragraph #3 "Aligning at 1500 Kilocycles" for accurate adjustment.

5. Aligning at 5 Megacycles (5000 KC--Police Band)

(a) Place test oscillator in operation at 5 megacycles.

(b) Turn dial pointer to 5 megacycles and turn band change switch to the Police Band (center position).

(c) Adjust the Police Band oscillator parallel trimmer, Illus. #46 (Fig. 3) for maximum output. If there are two peaks, the proper one is with the trimmer screw farthest out, (less capacity).

(d) Adjust the Police Band antenna parallel trimmer, Illus. #44 (Fig. 3) to maximum output.

(e) Adjust the Police Band detector trimmer, Illus. #45 (Fig. 3) to maximum output.

(f) Then try to increase the output by detuning the detector trimmer, Illus. #45, slightly and retuning the receiver dial. If this causes the output to go down, detune the trimmer in the opposite direction. Continue detuning the trimmer and retuning the receiver dial until maximum output meter deflection is secured.

6. Aligning at 16 Megacycles (16,000 KC--Foreign Band)

(a) Be sure that the "D" terminal is connected to the "G" terminal on the antenna terminal strip.

(b) Place the test oscillator in operation at 16 megacycles.

(c) Turn dial pointer to 16 megacycles and turn band change switch to the Foreign Band (fully counter-clockwise).

(d) Adjust the Foreign Band oscillator parallel trimmer, Illus. #57B (Fig. 3) to maximum output. Check to see if it has been adjusted to the proper peak by tuning the receiver to approximately 15.1 megacycles. A repeat signal should be heard at this point. If none is present, even with greatly increased oscillator output, retune the receiver to 16 MC and adjust the trimmer, Illus. #57B, to the proper peak with the trimmer screw farther out (less capacity).

(e) Adjust the Foreign Band antenna trimmer, Illus. #55B (Fig. 3) to maximum output.

(f) Adjust the Foreign Band detector trimmer, Illus. #56B (Fig. 3) to maximum output. Then try to increase the output by detuning the trimmer slightly and retuning the dial until a maximum output meter deflection is secured.

(g) Check the adjustment by tuning the receiver to the image at about 15.1 MC. The image should be much weaker than the 16 MC signal. If the image is equal to or stronger than the 16 MC signal, trimmer Illus. #56B is not at the proper peak. Turn the trimmer IN a turn or so, then readjust as above.

GENERAL: The Delco Model R-1118 is a ten tube, three band, all wave receiver with A.V.C., continuously variable tone control and automatic bass compensation. The receiver is equipped with a band spread dial and a "Robot Eye" tuning indicator. The complete tube complement is as follows: two type 6K7, R-F and I-F Amplifiers; one type 6A8, Detector-Oscillator; one type 6H6, 2nd Detector and A.V.C.; two type 6C5, 1st and 2nd A-F Amplifiers; two type 6F6 in the Output Stage; one type 5V4G Rectifier and one type 6G5 Tuning Indicator.

The frequency ranges on the three bands covered are: American Broadcast Band (yellow) 527 to 1750 KC; Police and Amateur Band (green) 1720 to 5600 KC; and the Foreign Short Wave Band (red) 5.5 to 18 MC.

©John F. Rider, Publisher

UNITED MOTORS SERVICE

MODEL R1119 Delco
Schematic, Voltage

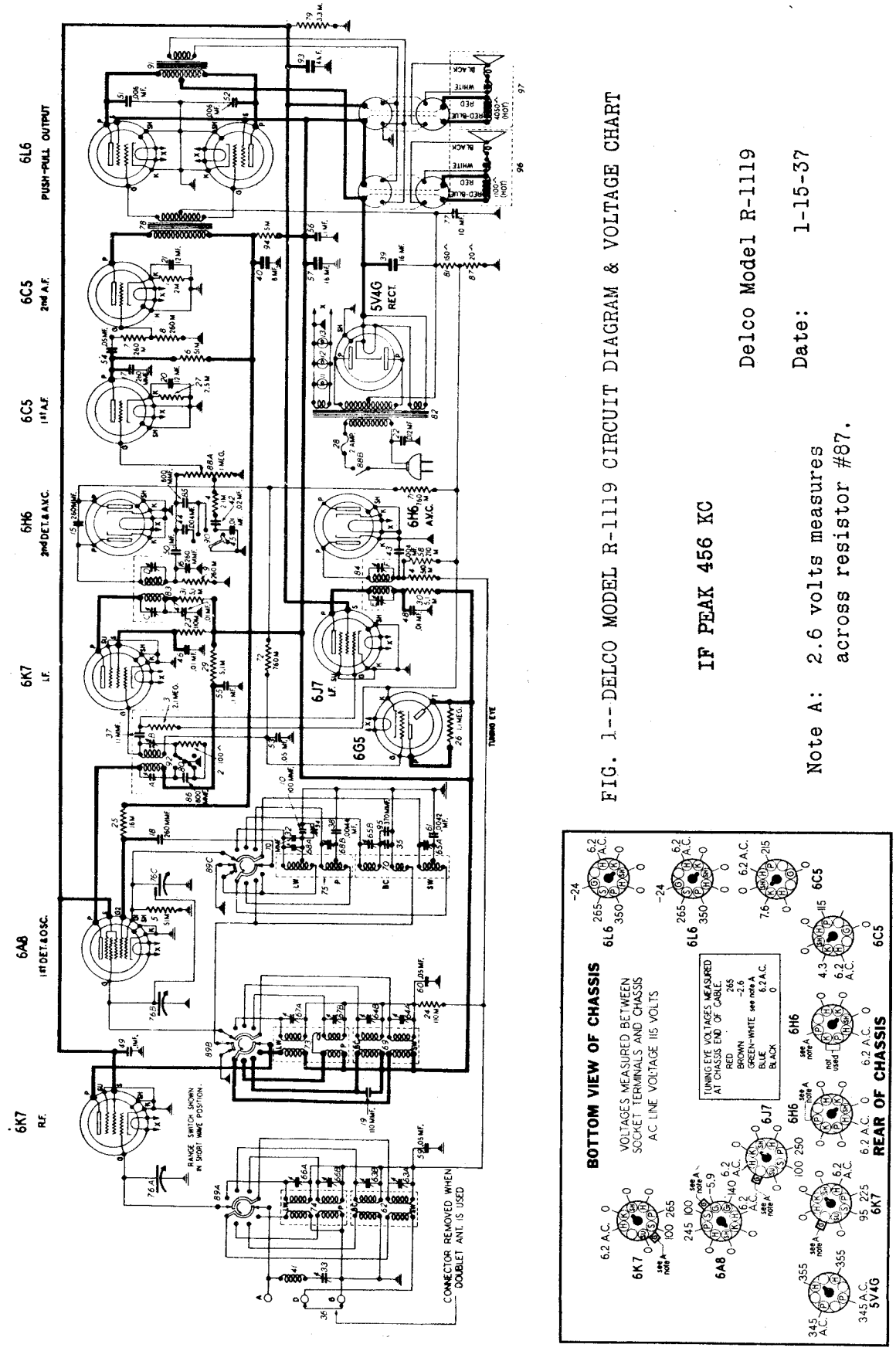

FIG. 1-- DELCO MODEL R-1119 CIRCUIT DIAGRAM & VOLTAGE CHART

IF PEAK 456 KC

Note A: 2.6 volts measures across resistor #87.

Delco Model R-1119

Date: 1-15-37

The frequency ranges on the four bands covered are: Long Wave band, 140 to 400 K.C., American Broadcast band, 527 to 1750 K.C., Police and Amateur band, 1720 to 5600 K.C., and Foreign Short Wave band, 5.5 to 18.0 M.C.

©John F. Rider, Publisher

MODEL R1119 Delco
Socket, Trimmers
Chassis, Alignment

UNITED MOTORS SERVICE

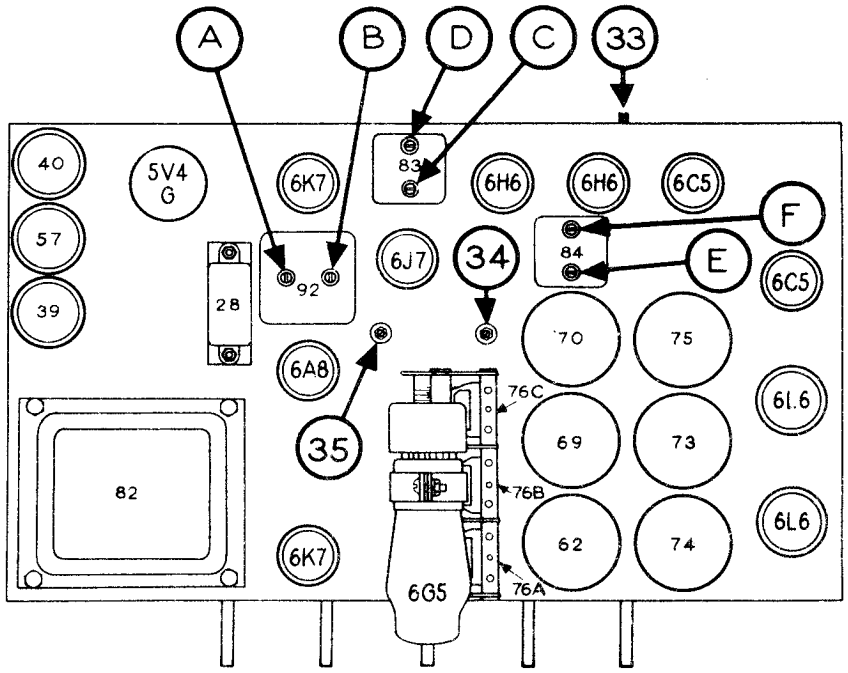

FIG. 2--PARTS LAYOUT--Top View

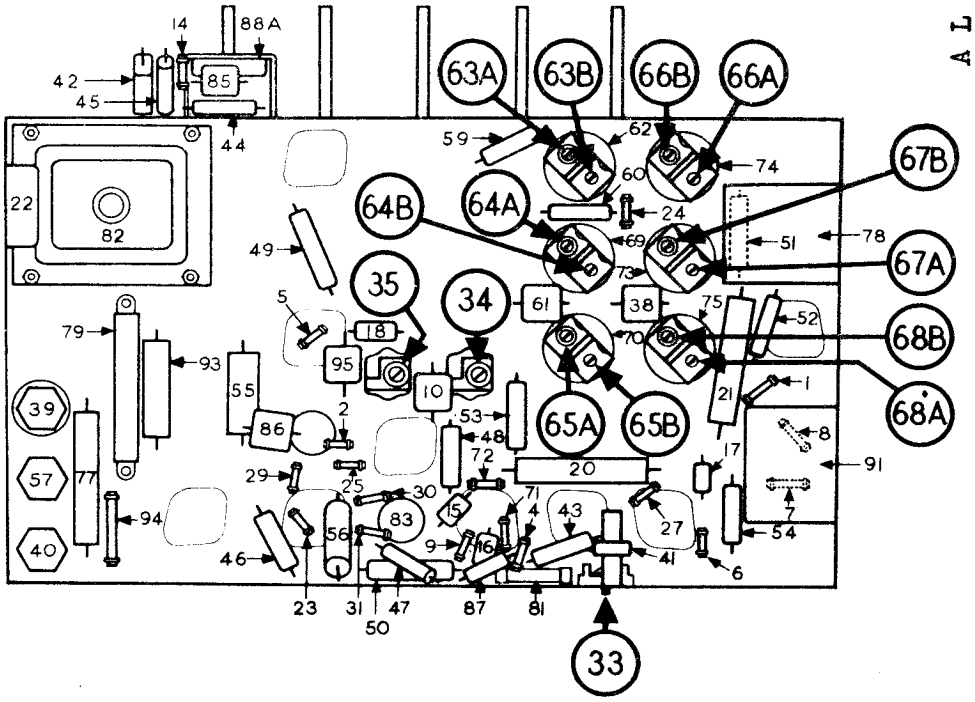

FIG. 3--PARTS LAYOUT--Bottom View

CONVENTIONAL ALIGNMENT. SEE
SPECIAL SECTION VOLUME VIII

CONVENTIONAL ALIGNMENT
(see special section)

A L I G N M E N T

Gen. at 456 kc, peak IF trimmers A,B,C & D. Gen. at 1500 kc, peak osc. trimmer 65B, det. trim. 64B, and ant. trimmer 63B. Gen. at 600 kc, peak osc. padder 35. Repeat B.C. alignment. Gen. at 1500 kc, fed to ant., adjust AVC trimmers E & F to minimum o.p. - repeat IF adj. at 456 kc. Adjust wave trap trimmer 33 for minimum o.p. at 456 kc. POLICE BAND- Gen. & dial at 5MC, peak trimmer 68B, Ant. trim. 66B, and Det. trimmer 67B. FOREIGN BAND - Gen. & dial at 16 MC, peak trimmer 65A, Ant. trim. 63A and Det. trim. 64A. Image at 15.1 MC should be weaker than at 16MC if trim. 64A is peaked correctly. Weather BAND 350kc.- Gen. & dial at 350 kc, peak LW osc. trim.68A, Ant. trim. 66A & Det. trim. 67A. WEATHER BAND 175kc - Gen. & dial at 175 kc, rock var. cond. & peak osc. padder 34. Repeat 350 kc. alignment.

©John F. Rider, Publisher

MODEL R1120 Delco
Schematic, Voltage

UNITED MOTORS SERVICE

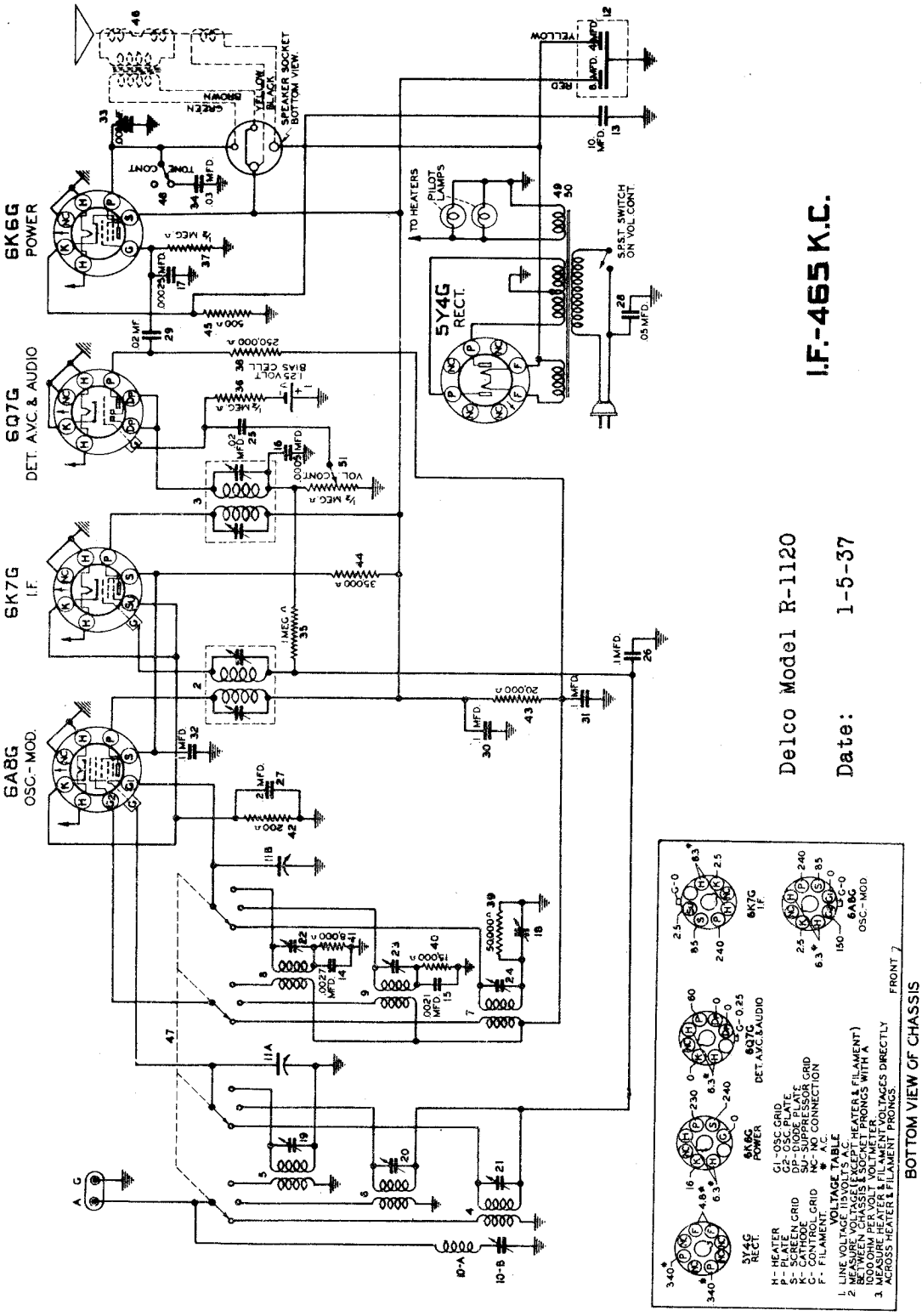

I.F.-465 K.C.

Delco Model R-1120

Date: 1-5-37

GENERAL: The Delco Model R-1120 is a five tube, three band, table model, 110 volt 60 cycle A.C. radio with A.V.C. and tone control.

The frequency ranges on the three bands covered are: American Broadcast Band 1720 to 540 kilocycles, Police-Amateur Band 1.8 to 5.8 megacycles and the Foreign Short Wave Band 5.8 to 18.1 megacycles.

©John F. Rider, Publisher

MODEL R1120 Delco
Socket,Trimmers
Chassis,Alignment

UNITED MOTORS SERVICE

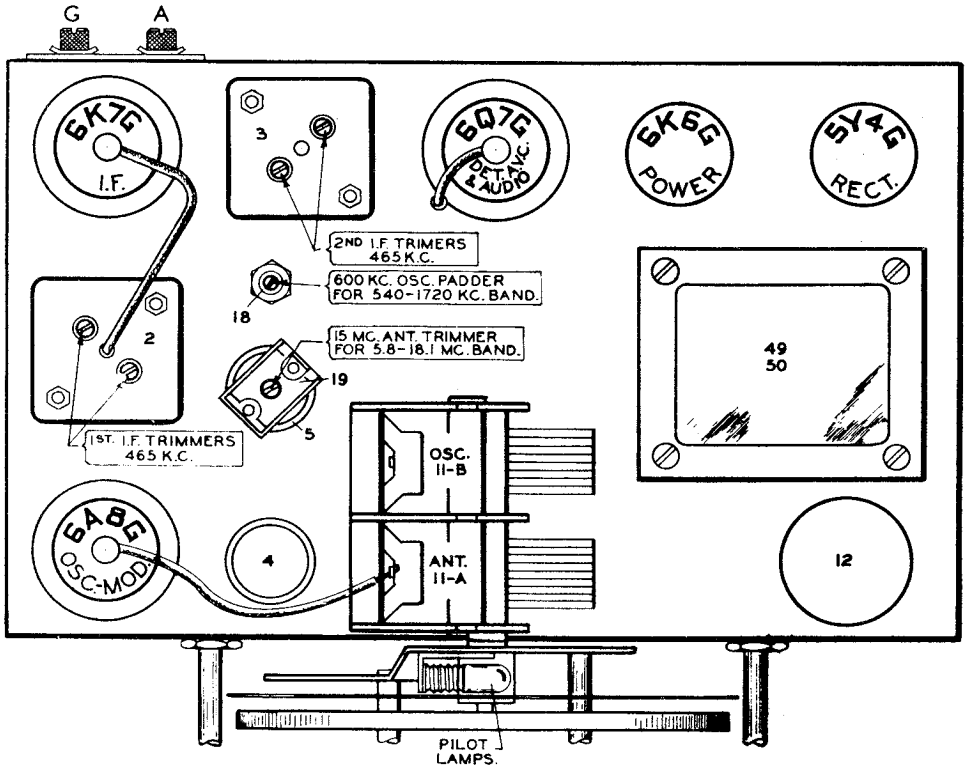

-PARTS LAYOUT--Top View

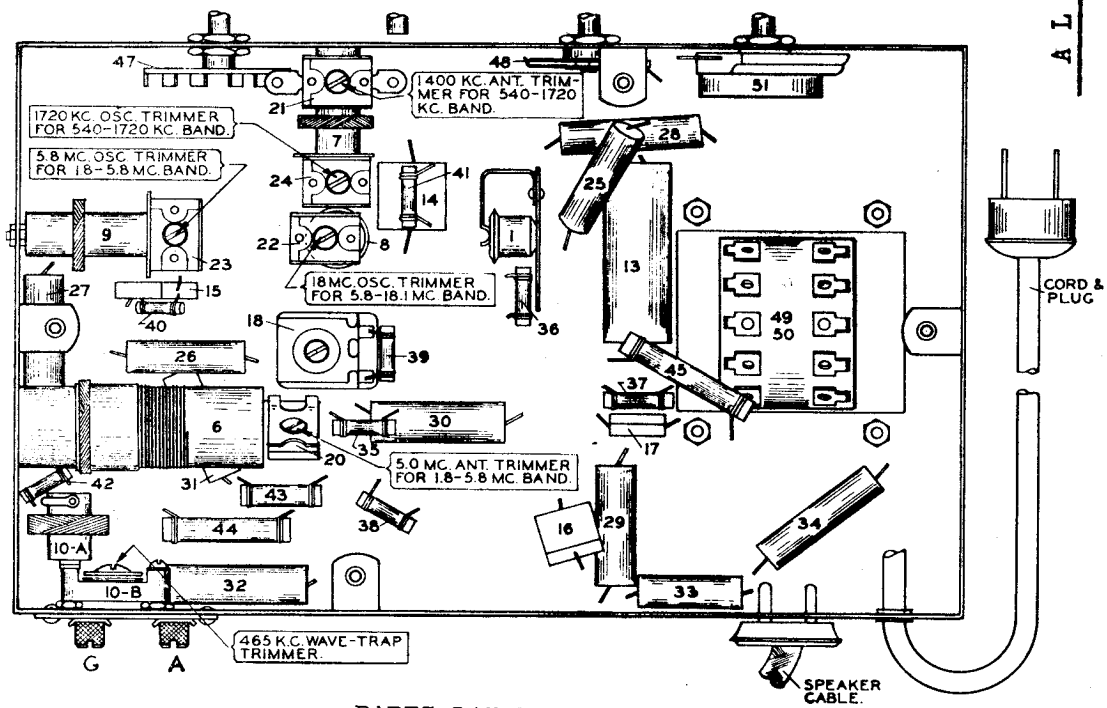

-PARTS LAYOUT--Bottom View

CONVENTIONAL ALIGNMENT
SEE SPECIAL SECTION VOL. VIII.

A L I G N M E N T

Gen. at 465 kc, peak 2nd IF trimmers desig. #3, and then peak 1st IF trimmers desig. #2.
Gen. at 465 kc, peak wave trap trimmer 10B. BROADCAST ALIGNMENT- Gen. at 1720 kc, peak trimmer 24.
Gen. and dial at 1400 kc, peak trimmer 21. Gen. and dial at 600 kc, rock var. cond. and peak osc.padder18.
POLICE-AMATEUR- Gen. and dial at 5.8 MC, peak osc. trimmer 23. Gen. and dial at 5MC, peak ant. trim. 20.
FOREIGN SHORT WAVE- Gen. and dial at 18 MC, peak osc. trimmer 22. Gen. at 18 MC and dial at 17 MC,
check for fundamental peak. Gen. and dial at 15 MC, rock var. cond. and peak ant. trimmer 19.

©John F. Rider, Publisher

UNITED MOTORS SERVICE

MODEL R1125 Delco
Schematic, Socket
Trimmers, Chassis
Voltage, Alignment

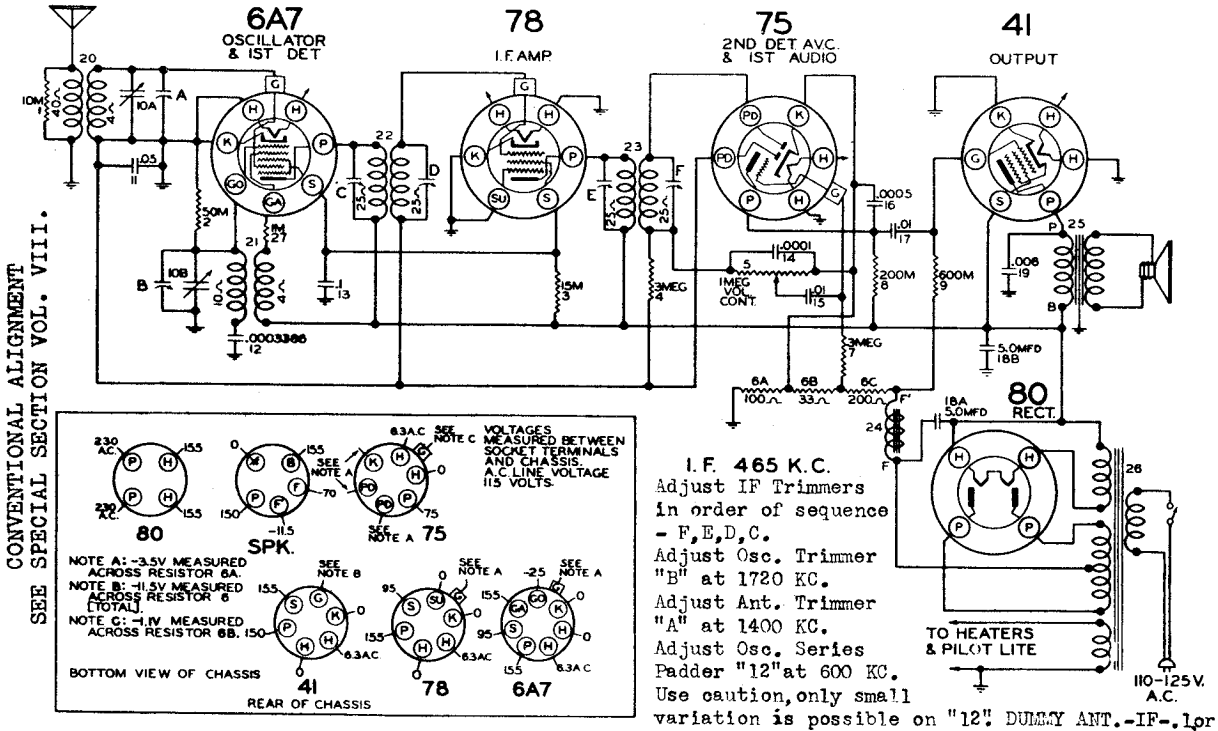

CONVENTIONAL ALIGNMENT
SEE SPECIAL SECTION VOL. VIII.

I. F. 465 K.C.
Adjust IF Trimmers in order of sequence - F, E, D, C.
Adjust Osc. Trimmer "B" at 1720 KC.
Adjust Ant. Trimmer "A" at 1400 KC.
Adjust Osc. Series Padder "12" at 600 KC.
Use caution, only small variation is possible on "12". DUMMY ANT.-IF-.1 or .25 Mfd, and RF-.0002 Mfd.

The frequency range of the Model R-1125 is from 535 to 1720 K.C.

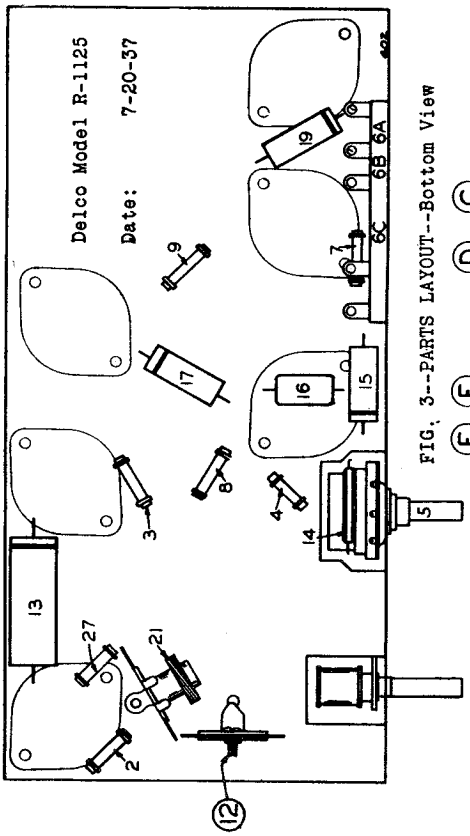

FIG. 3--PARTS LAYOUT--Bottom View

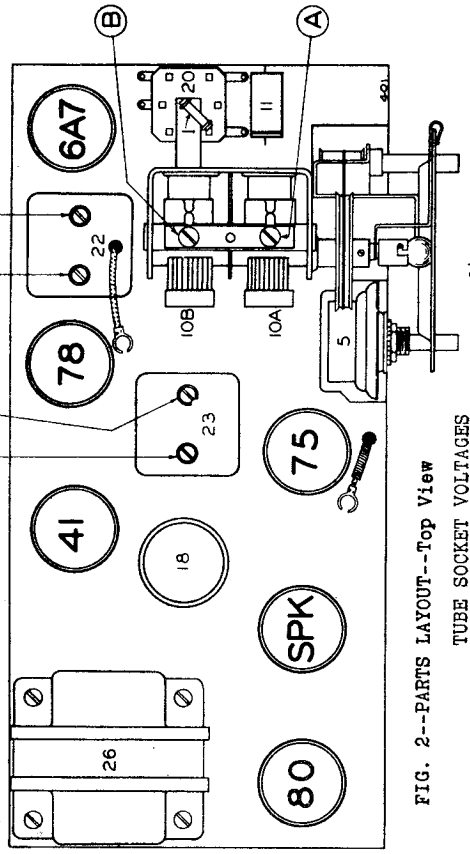

FIG. 2--PARTS LAYOUT--Top View

TUBE SOCKET VOLTAGES

These readings were made with a D.C. voltmeter having a resistance of 1000 ohms per volt.

A. The grid bias for the 6A7, 78 tubes and the anode voltage of the A.V.C. section of the 75 is 3.5 volts measured across resistor 6A.

B. The grid bias for the 41 output tube is measured across resistor 6A, B, C, total.

C. The grid bias for the 75 tube is 1.1 volts measured across resistor 6B

©John F. Rider, Publisher

MODEL R1126 Delco
Schematic, Socket

UNITED MOTORS SERVICE

Trimmers, Voltage
Chassis, Alignment

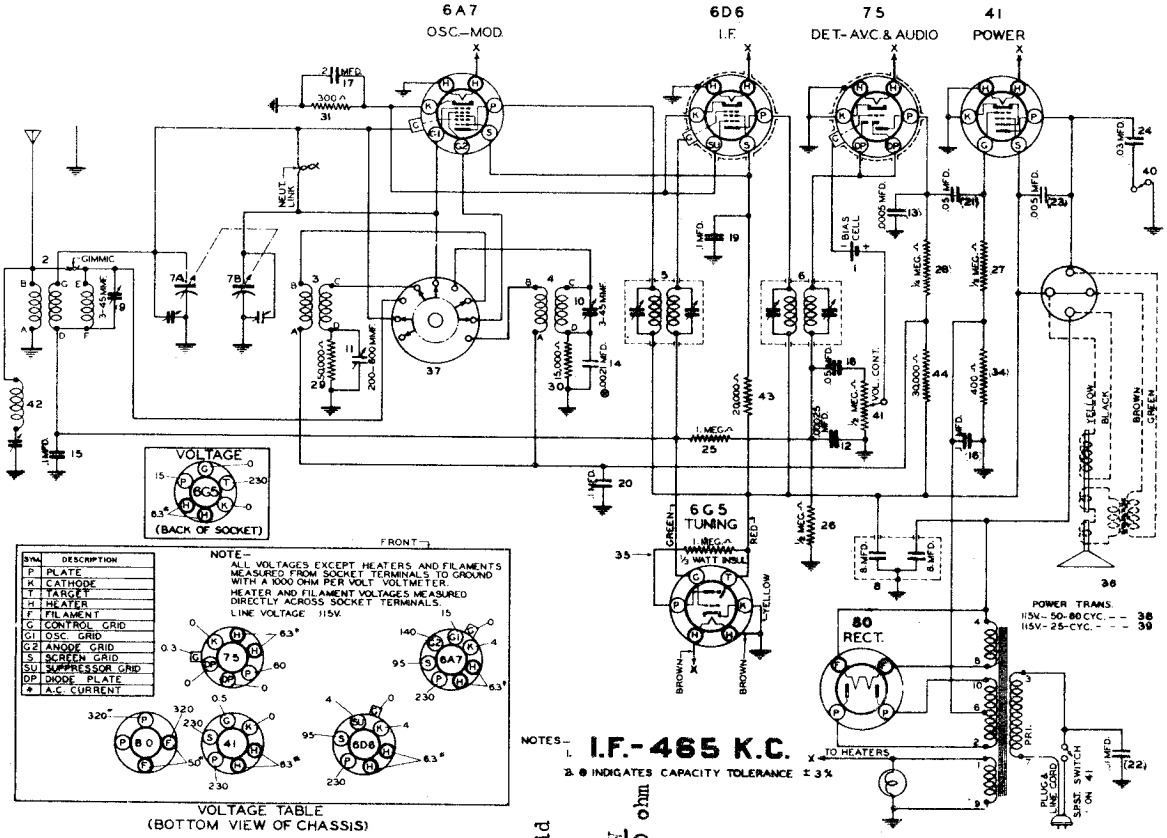

VOLTAGE TABLE
(BOTTOM VIEW OF CHASSIS)

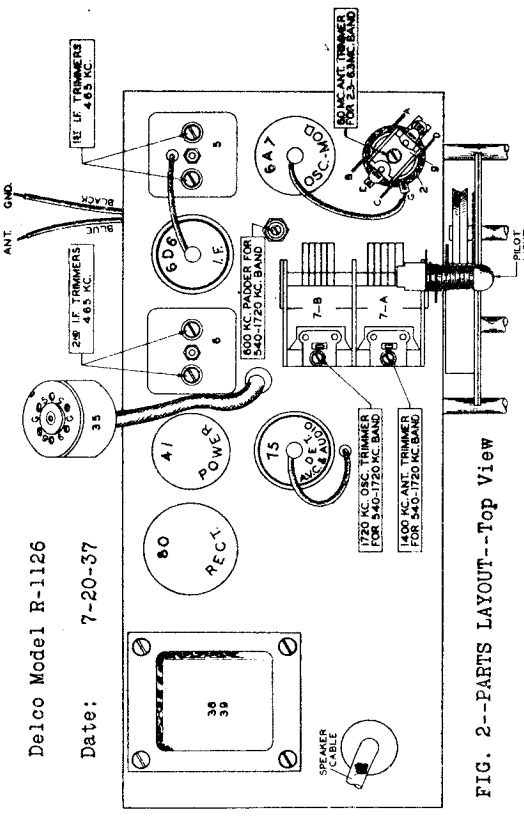

FIG. 2--PARTS LAYOUT--Top View

Do not remove control grid clip lead from 6A7 when aligning IF.

CONVENTIONAL ALIGNMENT
SEE SPECIAL SECTION VOL. VIII.

DUMMY IF WAVE TRAP & RF SW
ANT. .02Mfd. .0002 Mfd. 400 ohm

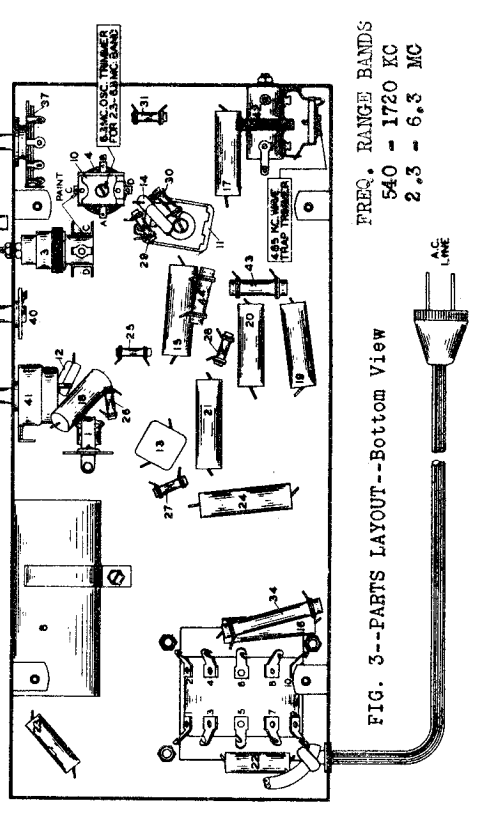

FIG. 3--PARTS LAYOUT--Bottom View

©John F. Rider, Publisher

UNITED MOTORS SERVICE

MODEL R1127 Delco
Schematic, Trimmers

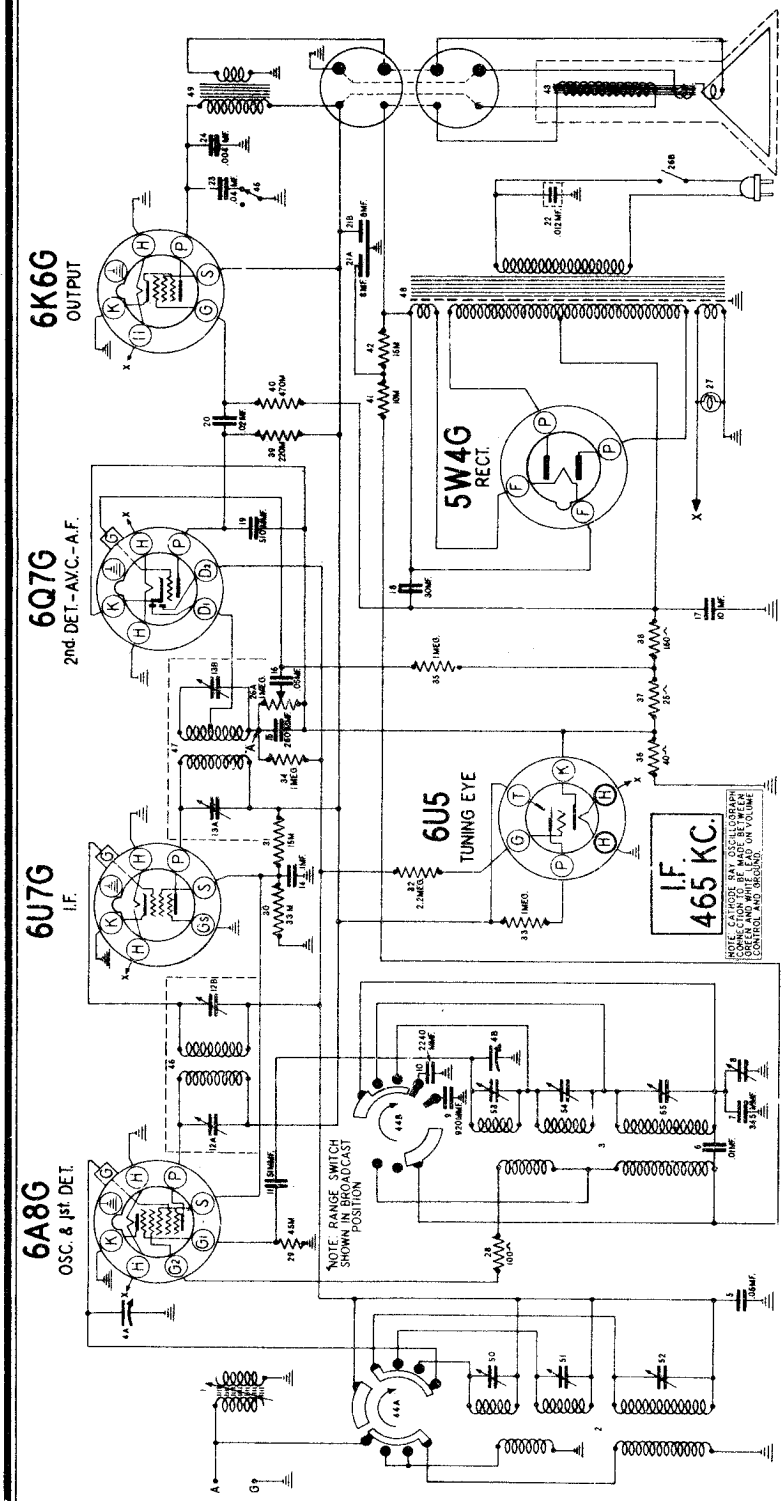

--TRIMMER LOCATIONS--

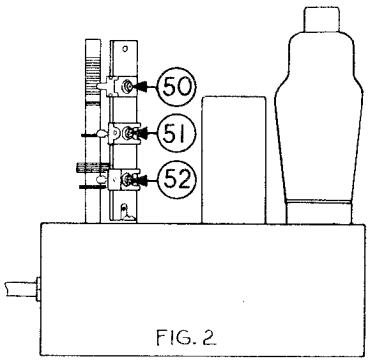

FIG. 2

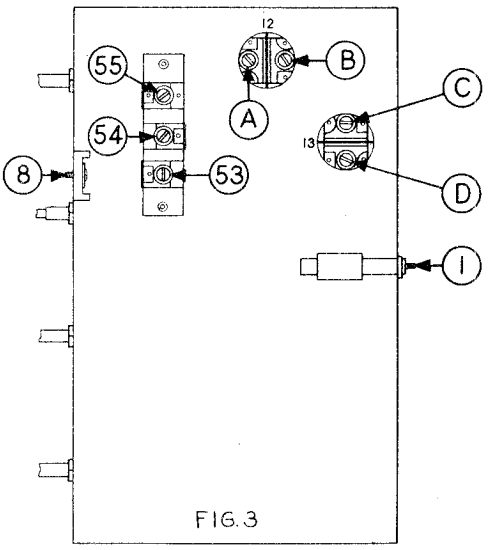

FIG. 3

Delco Model R-1127

Date: 8-2-37

The Delco Model R-1127 is a six tube, three band, receiver with A.V.C., tone control and "Robot" tuning eye. The complete tube complement is as follows: 6A8G Detector-Oscillator, 6U7G I.F. Amplifier, 6Q7G 2nd Detector, A.V.C. and 1st Audio Amplifier, 6K6G Output, 5W4G Rectifier and a 6U5 tuning eye.

The frequency range on the three bands covered are: American Broadcast Band 540 to 1720 K.C., Police and Amateur Band 1700 to 5600 K.C., and the Foreign Short Wave Band 5.5 to 18.0 M.C.

©John F. Rider, Publisher

MODEL R1127 Delco
Voltage, Alignment

UNITED MOTORS SERVICE

TUBE SOCKET VOLTAGES

Voltage measurements (except heaters) made with 1000 ohm per volt D.C. voltmeter from tube socket contacts to ground.

Tube	H	P	S	G2	G	K
6A8G	6	230	100	170	A	0
6U7G	6	230	100		A	0
6Q7G	6	105	-		B	-2.3
6K6G	6	220	230		C	0
5W4G	6	*	-		-	-
6U5	6	14	-	-	A	-2.3

* A.C. voltage--290 volts.....Target voltage tuning eye.....230 volts.

Note A: The bias on the control grids of the 6A8G, 6U7G and 6U5 tubes is -2.3 volts measured across resistor 36.

Note B: The bias on the control grid of the 6Q7G is -4 volts measured across resistors 36 and 37.

Note C: The bias on the control grid of the 6K6G is -14 volts measured across resistors 36, 37 and 38.

Delco Model R-1127 Date: 8-2-37

DIAL SETTING CHECK: Turn the tuning knob until the rotor plates of the condenser gang are fully meshed. The dial pointer should now be on the black horizontal line below 530 K.C. on the dial. This check should be made before attempting any trimmer adjustments.

1. Peaking I-F Stages at 465 K.C.

(a) Connect the signal lead of the signal generator to the grid cap of the 6A6G tube through a .1 or .25 mfd. condenser. DO NOT REMOVE THE GRID CLIP FROM THE TUBE.

(b) Connect the ground lead of the signal generator to the receiver chassis.

(c) Place the signal generator in operation at 465 K.C.

(d) Turn the range switch to the broadcast position (fully clockwise).

(e) Set the receiver dial pointer to about the 1000 K.C. point BETWEEN STATIONS.

(f) Turn the receiver volume control to the maximum position.

(g) Adjust the four I-F trimmers, A, B, C and D on the two I-F coils, (Fig. 3), carefully for maximum output in the following sequence A-B-C-D. Then repeat the four trimmer adjustments.

2. Adjusting the Wave Trap

(a) Connect the signal generator to the antenna terminal through a 400 or 500 ohm carbon resistor.

(b) Adjust the signal generator to 465 K.C.

(c) Turn the volume control on full.

(d) Set the dial pointer to about 1000 K.C. BETWEEN STATIONS.

(e) Adjust the wave trap trimmer, Illus. #1, (Fig. 3), for MINIMUM output, increasing the oscillator output as necessary to obtain a clearly defined point of minimum output.

3. Aligning at 16 M.C. (16,000 K.C. Foreign Wave Band)

(a) Turn the range switch to the Foreign Band position (extreme counter-clockwise).

(b) Set the dial pointer to 16 megacycles.

(c) Apply a 16 M.C. Signal to the A and G terminals of the receiver through a 400 or 500 ohm carbon resistor.

(d) Adjust the Foreign Band oscillator parallel trimmer, Illus. #53, (Fig. 3), to maximum output. Check to see if it has been adjusted to the proper peak by tuning the receiver to approximately 15.1 M.C. A repeat signal should be heard at this point. If none is present, even with greatly increased oscillator output, retune the receiver to 16 M.C. and readjust the trimmer, Illus. #53, (Fig. 3), the proper peak is the one with the trimmer screw farthest out (least capacity).

(e) Adjust the Foreign Band antenna trimmer, Illus. #50, (Fig. 2), to maximum output. Then try to increase the output by detuning the trimmer slightly and retuning the dial until a maximum output meter deflection is secured.

(f) Check the adjustment by tuning the receiver to the image at about 15.1 M.C. The image should be much weaker than the 16 M.C. signal. If the image is equal to or stronger than the 16 M.C. signal, the trimmer, Illus. #50, is not at the proper peak. Turn the trimmer in a turn or so, then readjust as above.

4. Aligning at 5 M.C. (5,000 K.C. Police Band)

(a) Place the signal generator in operation at 5 M.C. and apply the signal to the A and G terminals of the receiver through a 400 or 500 ohm carbon resistor.

(b) Turn the dial pointer to 5 megacycles and the band change switch to the Police Band (center) position.

(c) Adjust the Police Band oscillator parallel trimmer, Illus. #54, (Fig. 3), for maximum output. If there are two peaks, the proper one is with the trimmer screw farthest out (least capacity).

(d) Adjust the Police Band antenna parallel trimmer, Illus. #51, (Fig. 2), to maximum output. Then try to increase the output by detuning the trimmer slightly and retuning the receiver dial. If this causes the output to go down, detune the trimmer in the opposite direction. Continue detuning the trimmer and retuning the receiver dial until maximum output meter deflection is secured.

5. Aligning at 1500 K.C. (Broadcast Band)

(a) Place the signal generator in operation at 1500 K.C. and apply a 1500 K.C. signal to the A and G terminal of the receiver through a 400 or 500 ohm carbon resistor.

(b) Turn the range switch to the Broadcast position (fully clockwise) and set the dial pointer to 1500 K.C.

(c) Adjust the Broadcast Band oscillator parallel trimmer, Illus. #55, (Fig. 3), to maximum output.

(d) Adjust the Broadcast Band antenna parallel trimmer, Illus. #52, (Fig. 2), to maximum output.

6. Aligning at 600 K.C. (Broadcast Band)

(a) Leave the signal generator connected as above but readjust to 600 K.C.

(b) Tune in the 600 K.C. Signal generator signal with the receiver dial for maximum output. (This point does not have to be exactly at the 600 K.C. dial setting.)

(c) Adjust the Broadcast Band oscillator tracking condenser, Illus. #8, (Fig. 3), while rocking the tuning condenser plates back and forth through resonance until no further increase in output can be obtained.

(d) Repeat operations under paragraph 5, "Aligning at 1500 Kilocycles" for accurate adjustments.

©John F. Rider, Publisher

MODELS R1128,R1129 Delco

UNITED MOTORS SERVICE

Schematic,Socket Trimmers,Chassis

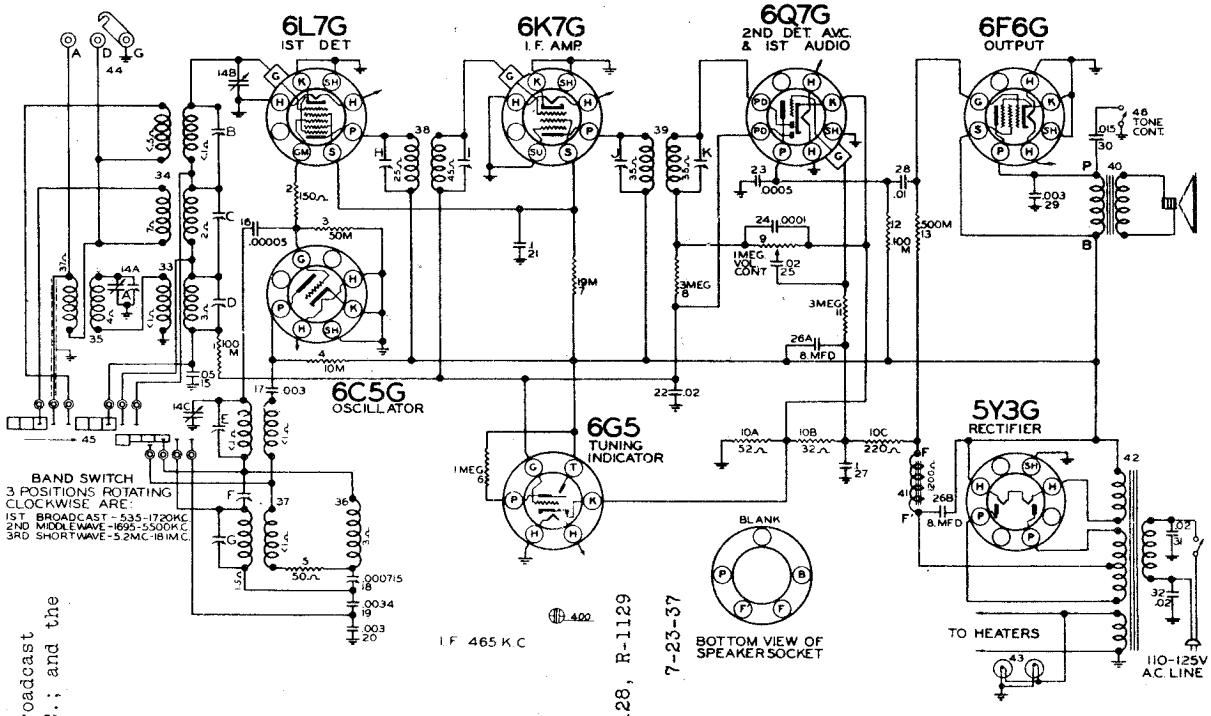

Models R-1128, R-1129

Date: 7-23-37

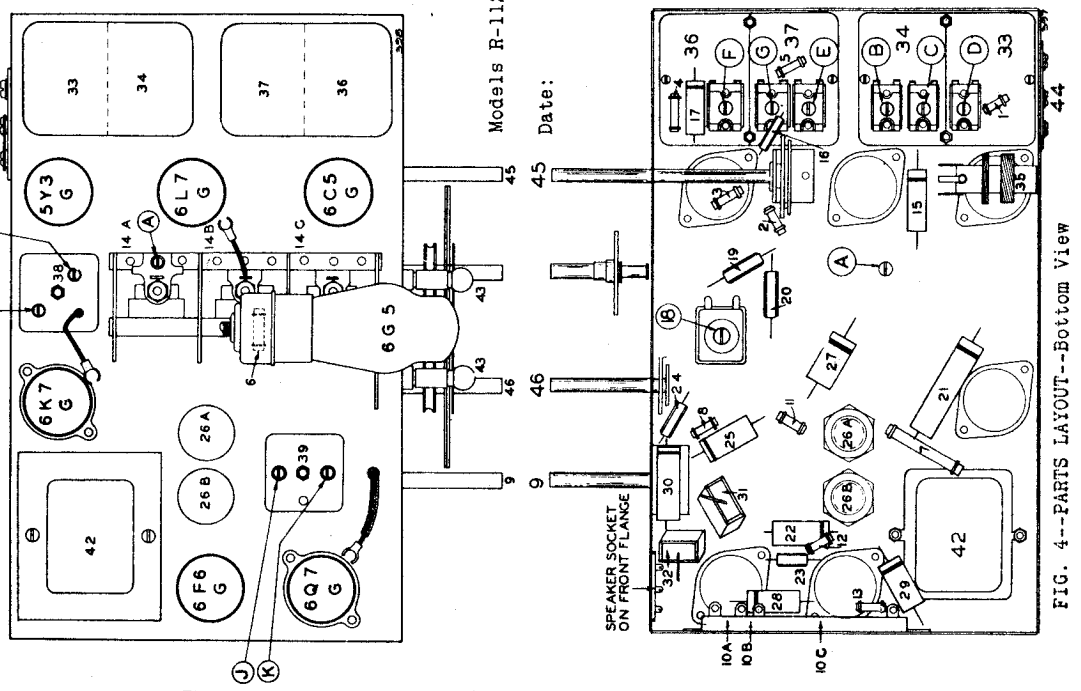

FIG. 3--PARTS LAYOUT--Top View

FIG. 4--PARTS LAYOUT--Bottom View

The frequency ranges on the three bands covered are: American Broadcast Band, 535 to 1720 K.C.; Police and Amateur Band, 1695 to 5500 K.C.; and the Foreign Short Wave Band, 5.2 to 18.1 M.C.

The Delco Models R-1128 (Table) and R-1129 (Console) are seven tube, three band receivers with A.V.C., tone control and Robot Eye tuning indicators. Both of these models employ the same chassis and use octal base glass type tubes.

©John F. Rider, Publisher

MODELS R1128,R1129 Delco
Voltage,Alignment

UNITED MOTORS SERVICE

The receiver should be aligned in a location free from local interference (interference caused by motors, flashers, automobile ignition, etc.), as high frequency disturbances will cause difficulties in adjusting the short wave circuits.

DIAL SETTING CHECK: Turn the tuning knob until the rotor plates of the condenser gang are fully meshed. The dial pointer should be on the horizontal line below 550 K.C. on the dial. This check should be made before attempting any trimmer adjustments.

1. Peaking I-F Stages at 465 Kilocycles

(a) Connect the ground lead of the Signal Generator to the receiver chassis.

(b) Connect the signal lead of the Signal Generator to the grid cap of the 6L7G tube through a .1 mfd. condenser. DO NOT REMOVE THE GRID CLIP FROM THE TUBE.

(c) Place the Signal Generator in operation at 465 K.C.

(d) Change the band switch to the broadcast position (fully counter-clockwise).

(e) Set the receiver dial pointer to any position where it has no tuning effect on the I-F signal from the Signal Generator.

(f) Turn the receiver volume control to the maximum position.

(g) Adjust the four I-F trimmers, H, I, J, K on coils Illus. 38 and 39 (Fig. 3) carefully for maximum output in the following sequence: K, J, I, H. Then repeat the four trimmer adjustments. During alignment, maintain as low a signal output from the signal generator as is consistent with obtaining at least half scale indication on the output meter.

2. Aligning at 1720 and 1550 Kilocycles (Broadcast Band)

(a) Connect the signal lead of the Signal Generator to the antenna terminal on the chassis through a .0002 mica condenser. Leave signal generator ground lead connected to the receiver chassis.

(b) Place Signal Generator in operation at 1720 K.C.

(c) Turn dial pointer to 1720 K.C. setting (gang condenser open).

(d) Adjust the oscillator trimmer condenser "F", Illus. 36 (Fig. 4) to maximum output.

(e) Place Signal Generator in operation at 1550 K.C.

(f) Turn dial pointer until 1550 K.C. signal is tuned in with maximum output.

(g) Adjust the detector parallel trimmer condenser "D", Illus. 33 (Fig. 4) to maximum output.

(h) Adjust the pre-selector parallel trimmer condenser "A", Illus. 14A (Fig. 3) to maximum output.

3. Aligning at 600 Kilocycles (Broadcast Band)

(a) Place Signal Generator in operation at 600 K.C.

(b) Tune in the 600 K.C. signal with the receiver dial for maximum output.

(c) Adjust the oscillator tracking condenser, Illus. 18 (Fig. 4) while rocking the tuning condenser plates back and forth through resonance until no further increase in output can be obtained.

(d) Repeat operations under paragraph #2 "Aligning at 1720 and 1550 Kilocycles" for accurate adjustments.

4. Aligning at 17 Megacycles (Foreign Band)

(a) Place the Signal Generator in operation at 17 megacycles.

(b) Turn dial pointer to 17 megacycles and turn band change switch to the Foreign Band (fully clockwise).

(c) Adjust the oscillator parallel trimmer condenser "E", Illus. 37 (Fig. 4) to maximum output.

(d) Adjust the antenna trimmer condenser "B", Illus. 34, (Fig. 4) to maximum output. Then try to increase the output by detuning the trimmer slightly and retuning the dial until a maximum output meter deflection is secured.

(e) Check the adjustment by tuning the receiver to the image at about 16.1 M.C. The image should be much weaker than the 17 M.C. signal. If the image is equal to or stronger than the 17 M.C. signal, trimmer "E", Illus. 37, is not at the proper peak. Turn the trimmer out a turn or so, then readjust as above.

5. Aligning at 5 Megacycles (5000 K.C. Police Band)

(a) Place Signal Generator in operation at 5 megacycles.

(b) Turn dial pointer to 5 megacycles and turn band change switch to the Police Band (center position).

(c) Adjust the oscillator parallel trimmer condenser "G", Illus. 37 (Fig. 4) for maximum output. If there are two peaks, the proper one is with the trimmer screw farthest out (less capacity).

(d) Adjust the antenna trimmer condenser "C", Illus. 34 (Fig. 4) to maximum output. Then try to increase the output by detuning the trimmer slightly and retuning the receiver dial. if this causes the output to go down, detune the trimmer in the opposite direction. Continue detuning the trimmer and retuning the receiver dial until maximum output meter deflection is secured.

Models R-1128, R-1129

Date: 7-23-37

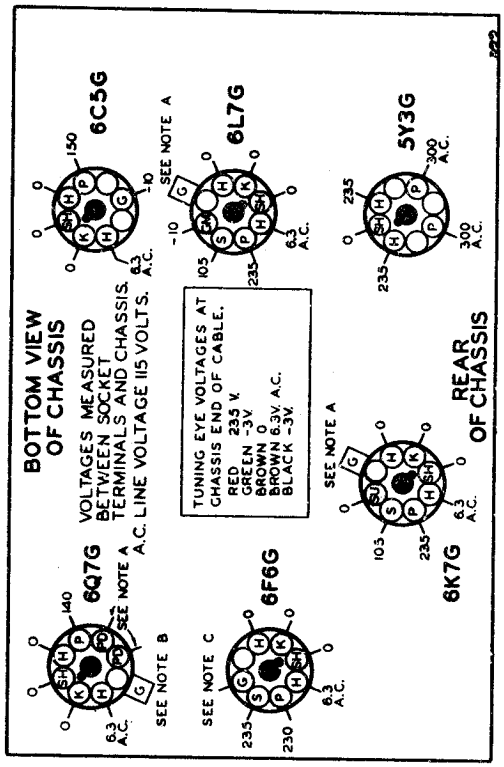

NOTE A: -3V. MEASURED ACROSS RESISTOR 10A
" B: -1.6V. " " " 10B
" C: -17 V. " " " 50 [TOTAL]

Voltage measurements made with a D.C. voltmeter having a resistance of 1000 ohms per volt. A.C. line voltage--115 volts.

©John F. Rider, Publisher

UNITED MOTORS SERVICE

MODEL R1130 Delco
Schematic, Voltage

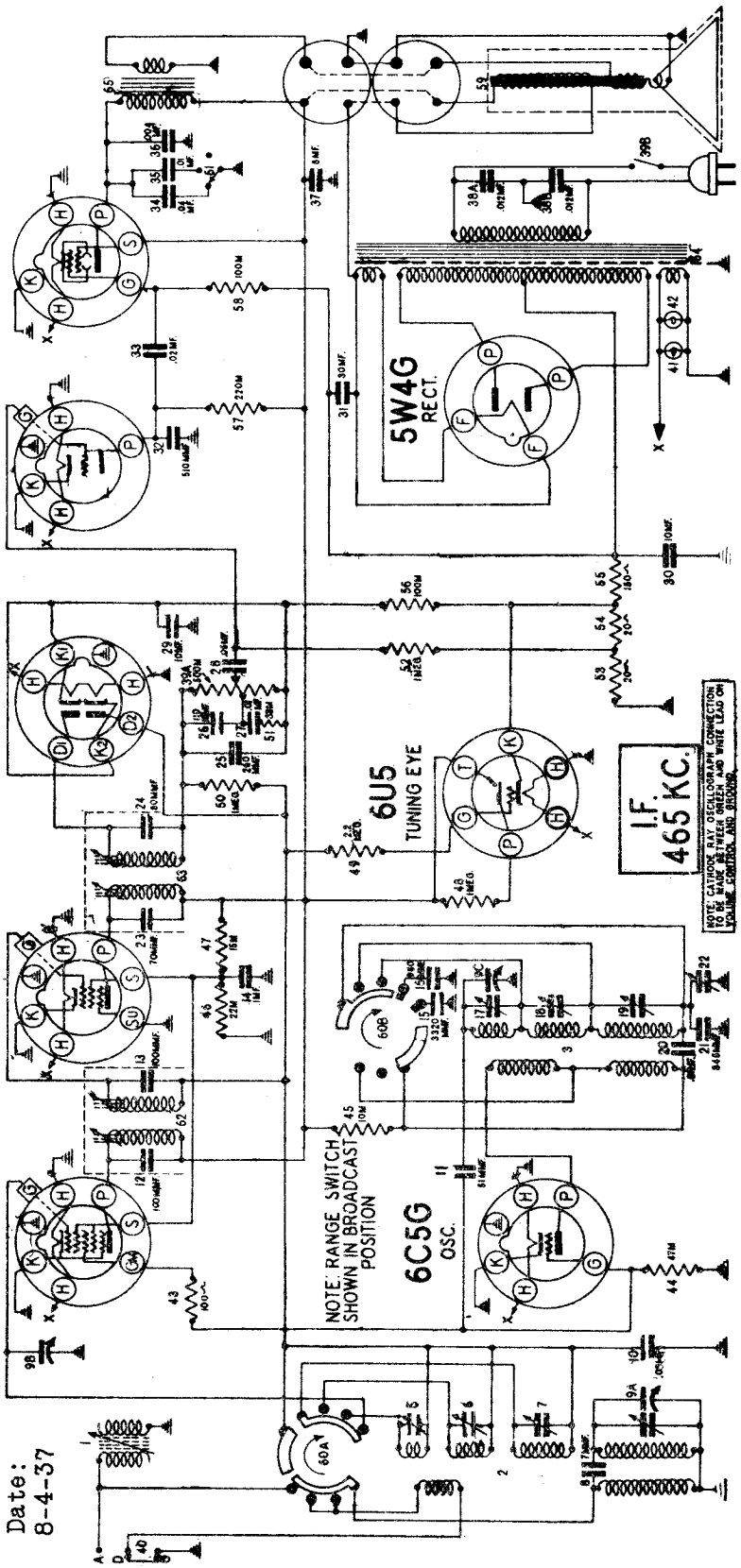

Delco Model R-1130

Date: 8-4-37

* A.C.....Tuning Eye Target Voltage.....230 volts.

TUBE SOCKET VOLTAGES

Tube	H	S	P	G3	K	G	Voltage measurements (except heaters) made with 1000 ohm per volt D.C. voltmeter from tube socket contacts to ground.
6L7G	6	90	230	-13	0	A	
6C5G	6	-	165		0	-14	Note A: The bias on the control grids of the 6L7G, 6K7 and 6U5 tubes is -2.5 volts measured across resistors 53 and 54.
6K7	6	90	230		0	A	
6H6	6	-	-		-2.5	-	
6F5	6	-	110		0	B	Note B: The bias on the control grid of the 6F5 tube is -1.2 volts measured across resistor 53.
6V6G	6	230	225		0	C	
5W4G	6		*285		-	-	
6U5	6		12		-2.5	A	Note C: The bias on the control grid of the 6V6G tube is -14 volts measured across resistors 53, 54 and 55.

The frequency ranges on the three bands covered are: American Broadcast Band 540 to 1720 K.C., Police and Amateur Band 1.7 to 5.6 M.C., and the Foreign Short Wave Band 5.5 to 18 M.C.

©John F. Rider, Publisher

MODEL R1130 Delco
Trimmers, Alignment

UNITED MOTORS SERVICE

Delco Model R-1130

Date: 8-4-37

The receiver should be aligned in a location free from local interference (interference caused by motors, flashers, automobile ignition, etc.) as high frequency disturbances will make it difficult to adjust the short wave circuits.

DIAL SETTING CHECK: Turn the tuning knob until the rotor plates of the condenser gang are fully meshed. The dial pointer should be on the 510 K.C. line on the dial. This check should be made before attempting any trimmer adjustments. Alignment of the chassis MUST be in the following order:

1. Peaking I-F Stages at 465 K.C.

(a) Connect the signal lead of the signal generator to the grid cap of the 6L7G tube through a .1 or .25 mfd. condenser. DO NOT REMOVE THE GRID CLIP FROM THE TUBE.

(b) Connect the ground lead of the signal generator to the receiver chassis.

(c) Place the signal generator in operation at 465 K.C.

(d) Set the receiver band switch to the broadcast position (fully clockwise).

(e) Set the dial pointer at about the 1000 K.C. BETWEEN STATIONS.

(f) Turn the volume control full on (to extreme clockwise position).

(g) Adjust the four I-F trimmers, A, B, C and D on the two I-F coils Illus. #62 and 63, carefully for maximum output in the following sequence--A-B-C-D. Then repeat the four trimmer adjustments.

2. Adjusting the Wave Trap

(a) Place the signal generator in operation at 465 K.C. and connect it to the receiver "A" terminal with a 400 or 500 ohm carbon resistor in series. (Leave the "G" and "G" terminals connected together during the complete alignment.) Connect the ground lead of the signal generator to the "G" terminal.

(b) With the volume control full on and the range switch in the broadcast position, tune the set to about 1000 K.C., BETWEEN STATIONS.

(c) Adjust the wave trap trimmer, Illus. #1, (Fig. 2), for MINIMUM output, increasing the signal generator output as necessary to obtain a clearly defined point of minimum output.

3. Aligning at 16 M.C. (16,000 K.C. Foreign Band)

(a) Place the signal generator in operation at 16 M.C. leaving it connected to the "A" terminal of the set through a 400 or 500 ohm carbon resistor, and with the ground lead connected to the "G" terminal as above.

(b) With the volume control full on, turn the range switch to the Foreign Band position (fully counter-clockwise) and tune the receiver dial pointer to 16 M.C.

(c) Adjust the Foreign Band oscillator parallel trimmer, Illus. #17, (Fig. 3), to maximum output. Check to see if it has been adjusted to the proper peak by tuning the receiver to approximately 15.1 M.C. A repeat signal should be heard at this point. If none is present, even with greatly increased signal generator output, retune the receiver to 16 M.C. and adjust the trimmer, Illus. #17, to the proper peak with the trimmer screw farther out (least capacity).

(d) Adjust the Foreign Band antenna trimmer, Illus. #5, (Fig. 2), to maximum output. Then try to increase the output by detuning the trimmer slightly and retuning the dial until a maximum output meter deflection is secured.

(e) Check the adjustment by tuning the receiver to the image at about 15.1 M.C. The image should be much weaker than the 16 M.C. signal. If the image is equal to or stronger than the 16 M.C. signal, the trimmer, Illus. #5, is not at the proper peak. Turn the trimmer in a turn or so, then readjust as above.

4. Aligning at 5 M.C. (5,000 K.C. Police Band)

(a) Place the signal generator in operation at 5 M.C. leaving it connected to the "A" terminal of the set through a 400 or 500 ohm carbon resistor.

(b) With the volume control full on turn the range switch to the Police and Amateur Band position (center position), and tune the receiver dial pointer to 5 M.C.

(c) Adjust the oscillator parallel trimmer, Illus. #18, (Fig. 3), to maximum output. If there are two peaks, the proper one is with the trimmer screw farthest out (least capacity).

(d) Adjust the antenna parallel trimmer, Illus. #6, (Fig. 2), to maximum output. Then try to increase the output by detuning the trimmer slightly and retuning the receiver dial. If this causes the output to go down, detune the trimmer in the opposite direction. Continue detuning the trimmer and retuning the receiver dial until maximum output meter deflection is secured.

5. Aligning at 1500 K.C. (Broadcast Band)

(a) Place the signal generator in operation at 1500 K.C. leaving it connected to the "A" terminal of the set through a 400 or 500 ohm carbon resistor.

(b) With the volume control full on turn the range switch to the Broadcast position (fully clockwise) and tune the receiver dial pointer to 1500 K.C.

(c) Adjust the oscillator parallel condenser, Illus. #19, (Fig. 3), to maximum output.

(d) Adjust the preselector trimmer, Illus. E, (Fig. 2), to maximum output.

(e) Adjust the antenna parallel trimmer, Illus. #7, (Fig. 2) to maximum output.

6. Aligning at 600 K.C. (Broadcast Band)

(a) Place the signal generator in operation at 600 kilocycles leaving it connected to the "A" terminal of the receiver through a 400 or 500 ohm carbon resistor.

(b) With the volume control full on and the range switch in the Broadcast Band position, tune the receiver to the 600 K.C. signal generator signal for maximum output. (This point does not have to be exactly at the 600 K.C. dial setting.)

(c) Adjust the oscillator tracking condenser, Illus. #22, (Fig. 2), while rocking the tuning condenser plates back and forth through resonance until no further increase in output can be obtained.

(d) Repeat operations under paragraph 5, "Aligning at 1500 Kilocycles" for accurate adjustments.

FIG. 2--TRIMMER LOCATION

Top View

FIG. 3--TRIMMER LOCATION

Bottom View

©John F. Rider, Publisher

UNITED MOTORS SERVICE

MODEL R1131 Delco
Schematic, Voltage

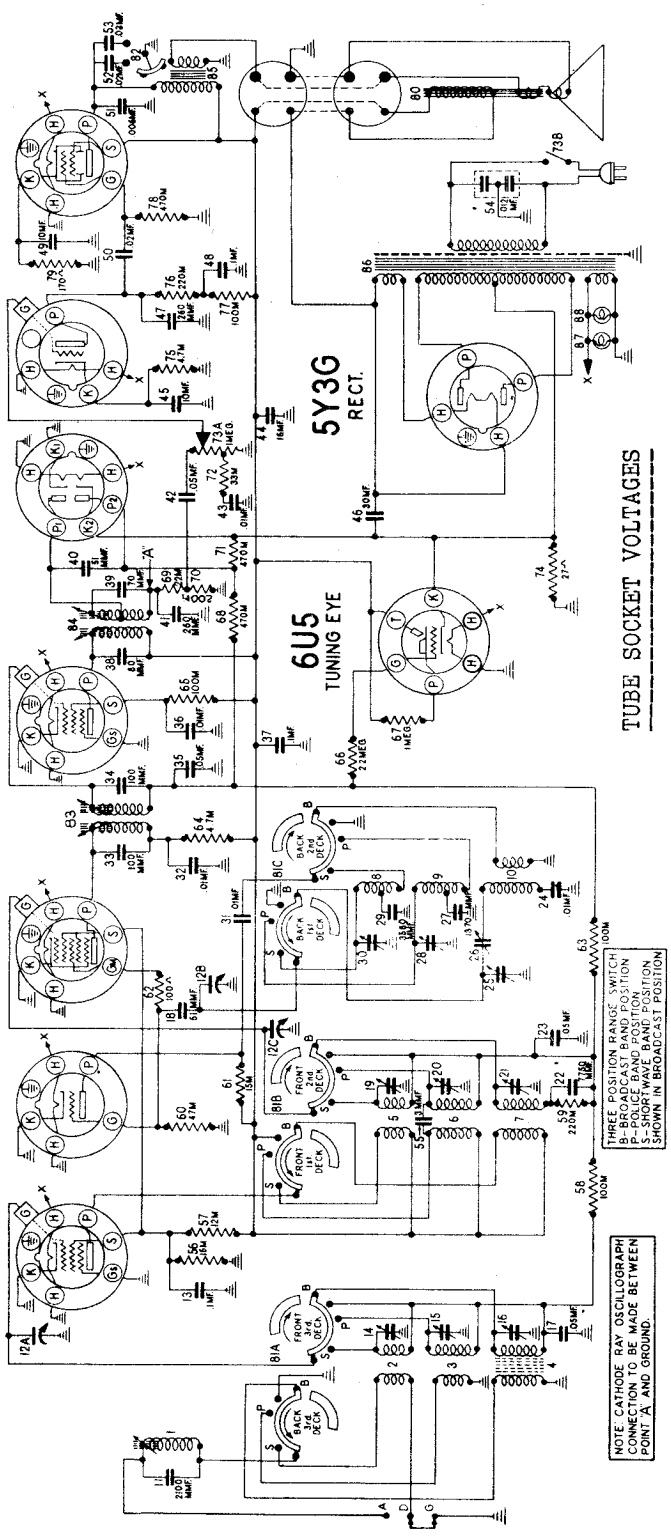

TUBE SOCKET VOLTAGES

Tube	Function	**H	P	S	GM	G	K
6K7	R-F Amp.	6	260	100	-	*	0
6C5	Oscillator	6	165	-	-	-1.6	0
6L7	Modulator	6	250	100	-1.3	*	0
6K7	I-F Amp.	6	260	100	-	*	0
6H6	Det.-A.V.C.	6	-	-	-		-2.8
6F5	A-F Amp.	6	100	-	-	0	1.4
6L6	Output	6	240	260	-	0	12
5Y3G	Rectifier	6	**340	-	-	-	-
6U5	Tuning Eye	6	14	-	-	*	-2.8

FREQUENCY RANGE BANDS
BROADCAST 525 - 1670 KC
POLICE 1.6 - 5.6 MC
FOREIGN 5.5 - 18.1 MC

* Bias on control grids 6L7, 6K7 (R-F), 6K7 (I-F) and 6U5 tubes is 2.8 volts measured across resistor #74.

** AC voltage. Tuning eye target voltage.....260 volts.

Delco Model R-1131

Date: 9-14-37

Voltage measurements made with a 100 ohm per volt DC voltmeter from tube socket contacts to ground. Plate voltage reading on 6F5 tube should be made on highest voltage scale.

The Delco Model R-1131 is a nine tube, three band, all wave receiver with A.V.C., "Robot" tuning eye, automatic bass compensation, tone control and permeability tuned--iron core I-F transformers. Seven of the tubes in this receiver are of the metal type, and two are of the glass type. The tube complement is as follows: 6K7 R-F Amplifier, 6L7 Modulator, 6C5 Oscillator, 6K7 I-F Amplifier, 6H6 2nd Detector and A.V.C., 6F5 Audio Amplifier, 6L6 Audio Output, 5Y3G Rectifier and a type 6U5 Tuning Eye.

©John F. Rider, Publisher

MODEL R1131 Delco
Trimmers, Alignment

UNITED MOTORS SERVICE

The receiver should be aligned in a location free from local interference (interference caused by motors, flashers, automobile ignition, etc.) as high frequency disturbances will make it difficult to adjust the short wave circuits.

DIAL SETTING CHECK: Turn the tuning knob until the rotor plates of the condenser gang are fully meshed. The dial pointer should be set on the 500 KC line on the dial, by loosening the clip at the point where the pointer slide is attached to the drive cord, and moving the pointer to the correct position. This check should be made before attempting any trimmer adjustments.

Alignment of the chassis MUST be in the following order:

1st	Intermediate Frequency	4th	Broadcast Band (600 KC)
2nd	Wave Trap	5th	Police and Amateur Band
3rd	Broadcast Band (1500 KC)	6th	Short Wave Band

1. Peaking I-F Stages at 465 Kilocycles

(a) Connect the signal lead of the signal generator to the grid cap of the 6L7 tube through a .1 or .25 mfd. condenser. DO NOT REMOVE THE GRID CLIP FROM THE TUBE.

(b) Connect the ground lead of the signal generator to the receiver chassis.

(c) Place the signal generator in operation at 465 KC.

(d) Set the receiver band switch to the broadcast position (counter clockwise).

(e) Set the dial pointer at any point where it does not affect the signal.

(f) Turn the volume control full on (to extreme clockwise position).

(g) Adjust the four I-F trimmers A, B, C and D on the two I-F coils, Illus. 83 and 84, Fig. 2, carefully for maximum output in the following sequence--A, B, C and D. Then repeat the four trimmer adjustments. During alignment, maintain as low a signal output from the signal generator as is consistent with obtaining at least half scale indication on the output meter.

2. Adjusting the Wave Trap

(a) Place the signal generator in operation at 465 KC and connect it to the receiver A terminal with a 400 or 500 ohm carbon resistor in series. (Leave the D and G terminals connected together during the complete alignment.) Connect the ground lead of the signal generator to the G terminal.

(b) With the volume control full on and the range switch in the broadcast position, tune the set to about 1000 KC, BETWEEN STATIONS.

(c) Adjust the wave trap trimmer, Illus. E, Fig. 3, for MINIMUM output, increasing the signal generator output as necessary to obtain a clearly defined point of minimum output.

3. Aligning at 1500 Kiocycles (Broadcast Band)

(a) Place the signal generator in operation at 1500 kilocycles leaving it connected to the A terminal of the set through a 400 or 500 ohm resistor.

(b) With the volume control full on turn the range switch to the broadcast position (counter clockwise) and tune the receiver dial pointer to 1500 KC.

(c) Adjust the oscillator trimmer condenser, Illus. 25, Fig. 3, to maximum output.

(d) Adjust the antenna trimmer, Illus. 16, Fig. 3, to maximum output.

(e) Adjust the detector trimmer, Illus. 21, Fig. 3, to maximum output.

4. Aligning at 600 Kilocycles (Broadcast Band)

(a) Place the signal generator in operation at 600 kilocycles leaving it connected to the A terminal of the receiver through a 400 or 500 ohm carbon resistor.

(b) With the volume control full on and the range switch in the Broadcast Band position, tune the receiver to the 600 KC signal generator signal for maximum output. (This point does not have to be exactly at the 600 KC dial setting.)

(c) Adjust the oscillator tracking condenser, Illus. 26, Fig. 3, while rocking the tuning condenser plates back and forth through resonance until no further increase in output can be obtained.

(d) Repeat operations under "Aligning at 1500 Kilocycles" for accurate adjustments.

5. Aligning at 5 Megacycles (5000 KC Police Band)

(a) Place the signal generator in operation at 5 megacycles leaving it connected to the A terminal of the set through a 400 or 500 ohm carbon resistor.

(b) With the volume control full on turn the range switch to the Police and Amateur Band position (center position), and tune the receiver dial pointer to 5 megacycles.

(c) Adjust the oscillator parallel trimmer, Illus. 28, Fig. 3, to maximum output. If there are two peaks, the proper one is with the trimmer screw farthest out (least capacity).

(d) Adjust the antenna parallel trimmer, Illus. 15, Fig. 3, to maximum output. Then try to increase the output by detuning the trimmer slightly and retuning the receiver dial. If this causes output to go down, detune the trimmer in the opposite direction. Continue detuning the trimmer and retuning the receiver dial until maximum output meter deflection is secured.

(e) Adjust the detector parallel trimmer, Illus. 20, Fig. 3, to maximum output. Try to increase output by rocking the dial through resonance and retuning the trimmer until maximum output is obtained.

6. Aligning at 16 Megacycles (16,000 KC Foreign Band)

(a) Place the signal generator in operation at 16 megacycles leaving it connected to the A terminal of the set through a 400 or 500 carbon resistor, and with the ground lead connected to the G terminal as above.

(b) With the volume control full on, turn the range switch to the foreign band position (fully clockwise) and tune the receiver dial pointer to 16 megacycles.

(c) Adjust the oscillator parallel trimmer, Illus. 30, Fig. 3, to maximum output. Check to see if it has been adjusted to the proper peak by tuning the receiver to approximately 15.1 megacycles. A repeat signal should be heard at this point. If none is present even with greatly increased signal generator output, retune the receiver to 16 MC and adjust the trimmer, Illus. 30, to the proper peak with the trimmer screw farther out.

(d) Adjust the antenna trimmer, Illus. 14, Fig. 3, to maximum output. Then try to increase output by detuning the trimmer slightly and retuning the dial until a maximum output meter deflection is secured.

Check the adjustment by tuning the receiver to the image at about 15.1 MC: the image should be much weaker than the 16 MC signal. If the image is equal to or stronger than the 16 MC signal, trimmer No. 14 is not at the proper peak. Turn the trimmer in a turn or so, then readjust as above.

(e) Adjust the parallel trimmer, Illus. 19, Fig. 3, to maximum output. Then try to increase output by detuning trimmer slightly and retuning the dial until a maximum output meter deflection is obtained. Check adjustment by tuning in image as described in the last paragraph under (d).

Delco Model R-1131

Date: 9-14-37

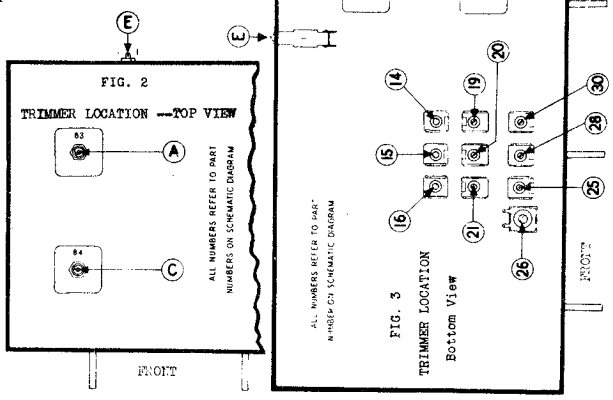

FIG. 2
TRIMMER LOCATION --TOP VIEW

FIG. 3
TRIMMER LOCATION
Bottom View

©John F. Rider, Publisher

UNITED MOTORS SERVICE

MODEL R1132 Delco
Schematic

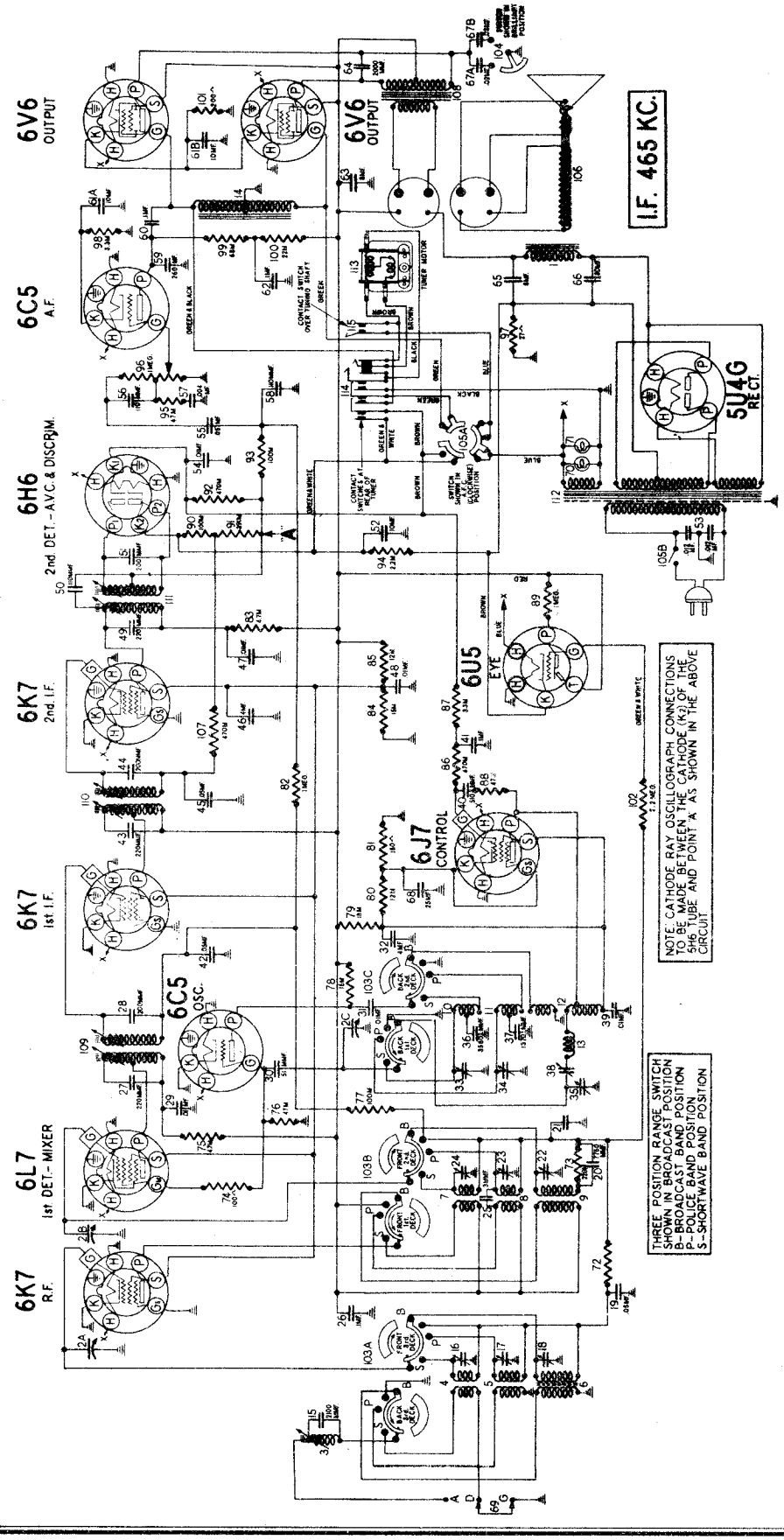

FIG. 5-- CIRCUIT DIAGRAM

DELCO MODEL R-1132

Date: 10-1-37

UNITED MOTORS SERVICE

The Delco Model R-1132 is a twelve tube, three band, all wave receiver with the entirely new and different "Delcomatic Tuner". Other features which this receiver embodies are A.V.C., "Robot" tuning eye, A.F.C., automatic bass compensation, tone control and permeability tuned--iron core I-F transformers. Ten of the tubes in this receiver are of the metal type, and two are of the glass type. The tube complement is as follows: One type 6K7 R-F amplifier, one type 6L7 modulator, one type 6C5 oscillator, one type 6K7 1st I-F amplifier, one type 6K7 2nd I-F amplifier, one type 6H6 second detector, A.V.C., and discriminator, one type 6C5 1st audio, two type 6V6 audio output, one type 5U4G rectifier, and one type 6U5 tuning eye.

©John F. Rider, Publisher

MODEL R1132 Delco
Voltage, Trimmers

UNITED MOTORS SERVICE

Dial Drive Data
Alignment Notes

INSTALLING THE DIAL DRIVE CORD

Before starting to thread the dial drive cord, see that the gang condenser is fully meshed, (plates fully closed). Insert one end of the cord through the upper eyelet on Drum "A" and knot it on the inside of the drum. Thread the cable over pulley "B" to the lower side of pulley "C", returning over pulley "C" to the upper side of pulley "D", thence to the rear of pulley "E". Lead the cord under pulley "E" and up to the front of drum "A". Wind two complete turns around drum "A", thread the cord through the lower eyelet on the drum and tie the end to the tension spring. Adjust the length of the cord so that the tension will be maintained on the cord when the spring is fastened to the small clip on the inside of the drum. Set the dial pointer to the last division on the left of the broadcast band scale, and clip the cord to the pointer slider.

INSTALLING THE BAND INDICATOR CORD

Before starting to thread the band indicator cord, tie a knot loosely in one end of the cord so that the tension spring may be connected to it. Tie a full knot about 3 inches from the knotted end of the cord. Place the range switch in the short wave position.

To thread the cord, take the end which has not been knotted, and wind one complete turn around drum "F", winding the turn from front to back. The cord should pass under the small metal pin which spans the drum. Loop the cord around the pin and wind one more complete turn around the drum. Run the knotted end of cord under pulley "H" to the lower side of pulley "I" and make one complete turn around "I". Insert the knot which has been tied 3 inches from the end of the cord into the slot in the pulley "I", and adjust the position of the dial scale so that the end of the pointer comes opposite the horizontal line across the dial scale, when the cord between the pulley "I" and "H" is fairly taut. Run the free end of the cord under pulley "G" and tie it to the tension spring. Adjust the lengths so that the tension will be maintained when the free end of the spring is connected to the knot at the other end of the cord. If the scale is not in exact alignment with the pointer, loosen the set screw which holds pulley "I" to the range switch shaft and adjust for correct position.

CIRCUIT ALIGNMENT

Individual coils and trimmer condensers are provided for each band, so that each circuit can be adjusted to give maximum efficiency on every tuning range. If realignment is found necessary, the circuits can be properly adjusted only with the use of a calibrated signal generator and an output meter.

The receiver should be aligned in a location free from local interference (interference caused by motors, flashers, automobile ignition, etc.) as high frequency disturbances will make it difficult to adjust the short wave circuits.

DIAL AND CAM SETTING CHECK: Turn the tuning knob until the rotor plates of the condenser gang are fully meshed. If the condenser will not close completely, proceed to loosen the set screws on the brass dial drive gear at the left side of the receiver and also the set screw on the flexible coupler on the gang condenser shaft. Then press the gang condenser plates closed and set the dial pointer to the 500 K.C. line on the dial scale by turning the cord drive drum on the left side of the mechanism. This check should be made before attempting any trimmer adjustments.

Alignment of the chassis MUST be in the following manner:

1st - Intermediate frequency
2nd - Wave trap
3rd - Broadcast band (1500 K.C.)
4th - Broadcast band (600 K.C.)
5th - A.F.C. alignment
6th - Police and amateur band
7th - Short wave band

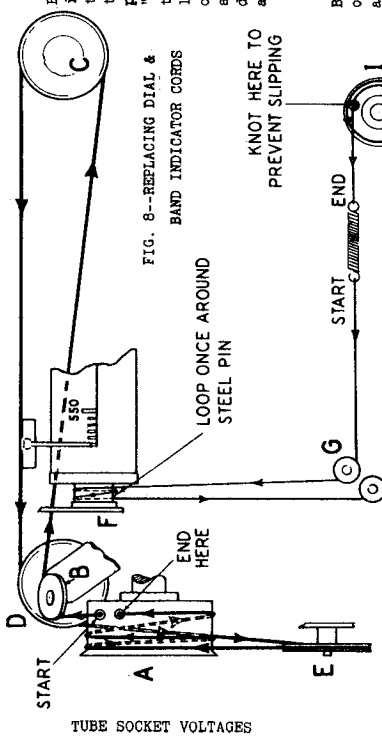

FIG. 8--REPLACING DIAL & BAND INDICATOR CORDS

TUBE SOCKET VOLTAGES

NOTE: Before proceeding with any voltage measurements the "A.F.C." switch must be in the manual position, volume control on full and tuning condenser in full mesh.

Tube	Function	P	S	GM	SU	G	K
6K7	R-F Amp.	290	100	--	0	A	0
6L7	Det.-Mixer	268	100	-.5	0	A	0
6C5	Oscillator	165	--	--		-5.0	0
6K7	1st I-F	290	100	--	0	A	0
6K7	2nd I-F	260	100	--	0	A	0
6J7	Control	112	112	--	1.5	--	1.5
6H6	Det. A.V.C.	0	--	--	--	--	0
6C5	A-F Amp.	116	--	--	--	0	5.5
6V6	Output	280	290	--	--	0	17
6V6	Output	280	290	--	--	0	17
5V4G	Rectifier	*330	--	--	--	--	--
6V5	Tuning Eye	16	--	--	--	-3.5	-3.5
		* A.C.				G	

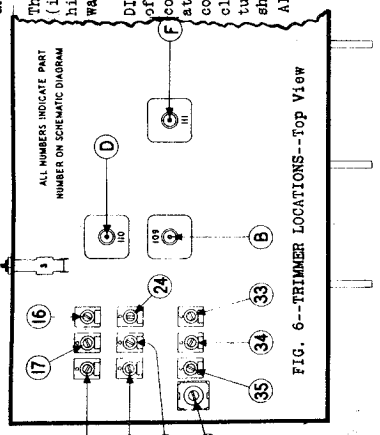

FIG. 6--TRIMMER LOCATIONS--Top View

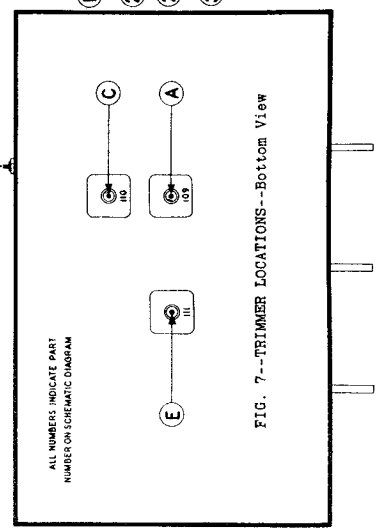

FIG. 7--TRIMMER LOCATIONS--Bottom View

TUBE SOCKET VOLTAGES

All measurements made with 1000 ohm per volt D.C. voltmeter from tube socket contacts to ground, except filaments. All filament voltages 6.3 volts measured with A.C. voltmeter across filaments.

Rectifier tube output voltage measured from filament contacts to ground... 355 volts D.C.

Tuning eye target voltage...290 volts.

NOTE "A": The grid bias for the 6L7 Modulator, 6K7 R-F, 6K7 1st I-F and 6K7 2nd I-F tubes is -3.5 volts, measured across resistor #97.

Delco Model R-1132
Date: 10-1-37

©John F. Rider, Publisher

UNITED MOTORS SERVICE

MODEL R1132 Delco Alignment

1. Peaking I-F Stages at 465 Kilocycles Delco Model R-1132 Date: 10-1-37

(a) Connect the signal lead of the signal generator to the grid cap of the 6L7 tube through a .1 or .25 mfd. condenser. DO NOT REMOVE THE GRID CLIP FROM THE TUBE.

(b) Connect the ground lead of the signal generator to the receiver chassis and leave it connected throughout the entire alignment procedure.

(c) Place the signal generator in operation at 465 K.C.

(d) Set the receiver band switch to the broadcast position (counter clockwise).

(e) Set the A.F.C. switch to the MANUAL TUNING POSITION (center position).

(f) Set the dial pointer at any point where it does not affect the signal.

(g) Turn the volume control full on (to extreme clockwise position).

(h) Adjust the six trimmers A, B, C, D, E and F on the three I-F coils, Illus. 109, 110 and 111 (Figs. 6 & 7), carefully for maximum output in the sequence given. Then repeat the six trimmer adjustments. During alignment, maintain as low a signal output from the signal generator as is consistent with obtaining at least half scale indication on the output meter.

2. Adjusting the Wave Trap

(a) Place the signal generator in operation at 465 K.C. and connect it to the receiver A terminal with a .0002 mfd. mica condenser in series. (Leave the D and G terminals connected together during the complete alignment.)

(b) With the volume control full on, the range switch in the broad cast position, and the A.F.C. switch in the manual (center) position tune the set to about 1000 K.C. BETWEEN STATIONS.

(c) Adjust the wave trap trimmer, Illus. G, (Fig. 6,) for MINIMUM output, increasing the signal generator output as necessary to obtain a clearly defined point of minimum output.

3. Aligning at 1500 Kilocycles (Broadcast Band)

(a) Place the signal generator in operation at 1500 kilocycles leaving it connected to the A terminal of the set through the .0002 mfd. mica condenser.

(b) With the volume control full on turn the range switch to the broadcast position (counter-clockwise) and tune the receiver dial pointer to 1500 K.C. BE SURE THAT A.F.C. SWITCH IS IN THE MANUAL (CENTER) POSITION.

(c) Adjust the oscillator parallel trimmer condenser, Illus. 35, (Fig. 6) to maximum output.

(d) Adjust the antenna parallel trimmer, Illus. 18, (Fig 6) to maximum output.

(e) Adjust the detector parallel trimmer, Illus. 22, (Fig. 6) to maximum output.

4. Aligning at 600 Kilocycles (Broadcast Band)

(a) Place the signal generator in operation at 600 kilocycles leaving it connected to the A terminal of the receiver through a .0002 mfd. mica condenser.

(b) With the volume control full on, the range switch in the broadcast position, and the A.F.C. switch in the manual (center) position, tune the receiver to the 600 K.C. signal for maximum output. (This point does not have to be exactly at the 600 K.C. dial setting.)

(c) Adjust the oscillator tracking condenser, Illus. 38, (Fig. 6) while "rocking" the tuning condenser plates back and forth through resonance until no further increase in output can be obtained.

(d) Repeat operations under "Aligning at 1500 Kilocycles" for accurate adjustments.

5. Automatic Frequency Control Alignment (A.F.C.)

(a) Place the signal generator in operation at 465 K.C. and couple it loosely to the 6L7 grid (connect the oscillator signal lead to the insulation on the grid lead of the 6L7). Switch off the modulation of the signal generator.

(b) Leave the A.F.C. switch in the manual (non A.F.C. or center) position.

(c) Connect the antenna A post to an outside aerial.

(d) Tune in a strong local station in the region of 1000 K.C. or lower (avoid stations around 930 K.C. which might beat with the second harmonic of the signal generator).

(e) Tune the receiver to zero beat (UNTIL AUDIO WHISTLE VANISHES COMPLETELY). (Tuning to either side of zero beat will cause the whistle to be heard.)

(f) NOW TURN THE A.F.C. SWITCH INTO THE A.F.C. POSITION (MAXIMUM CLOCKWISE POSITION).

(g) If the A.F.C. system is out of alignment, the beat note or whistle will again appear. If the beat note is heard adjust the discriminator trimmer, Illus. F, (Fig. 6), until zero beat is again obtained.

(h) If the above procedure has been followed correctly, opening or closing the A.F.C. switch will have no effect on zero beat.

5A. Alternate Method of A.F.C. Alignment

(Two Signal Generators Necessary)

(a) Connect one of the signal generators to the antenna A terminal and place it in operation at 1000 K.C. The 1000 K.C. signal should be unmodulated and its output should be rather high.

(b) Now proceed to connect the other generator as described in the previous method and place it in operation at 465 K.C. (unmodulated).

(c) The remaining procedure is the same as in e, f, g and h of the previous method of A.F.C. alignment.

NOTE: This method is preferable to the first as both signals being unmodulated, the zero beat setting is more easily distinguished.

6. Aligning at 5 Megacycles (5000 K.C. Police Band)

(a) Place the signal generator in operation at 5 megacycles leaving it connected to the A terminal of the set through .0002 mfd. mica condenser.

(b) With the volume control full on turn the range switch to the Police and Amateur Band position (center position). Then tune the receiver dial pointer to 5 megacycles.

(c) Adjust the oscillator parallel trimmer, Illus. 34, (Fig. 6), to maximum output. If there are two peaks, the proper one is with the trimmer screw farthest out. (Least capacity.)

(d) Adjust the antenna parallel trimmer, Illus. 17, (Fig. 6), to maximum output. Then try to increase the output by detuning the trimmer slightly and retuning the receiver dial. If this causes the output to go down, detune the trimmer in the opposite direction. Continue detuning the trimmer and retuning the receiver dial until maximum output meter deflection is secured.

(e) Adjust the detector parallel trimmer, Illus. 23, (Fig. 6), to maximum output. Try to increase output by rocking the dial through resonance and retuning the trimmer until maximum output is obtained

7. Aligning at 16 Megacycles (16,000 K.C. Foreign Band)

(a) Place the signal generator in operation at 16 megacycles leaving it connected to the A terminal of the set through a .0002 mfd. mica condenser.

(b) With the volume control full on, tune the range switch to the Foreign Band position (fully clockwise), and tune the receiver dial pointer to 16 megacycles.

(c) Adjust the oscillator parallel trimmer, Illus. 33, (Fig. 6), to maximum output. Check to see if it has been adjusted to the proper peak by tuning the receiver to approximately 15.1 megacycles. A repeat signal should be heard at this point. If none is present even with greatly increased signal generator output, retune the receiver to 16 M.C. and adjust the trimmer, Illus. 33, to the proper peak with the trimmer screw farther out.

(d) Adjust both the antenna trimmer, Illus. 16, (Fig. 6), and the detector parallel trimmer, Illus. 24, (Fig. 6), to maximum output. Then try to increase the output by detuning the trimmer slightly and retuning the dial until a maximum output meter deflection is obtained.

Check the adjustment by tuning the receiver to the image at about 15.1 M.C., the image should be much weaker than the 16 M.C. signal. If the image is equal to or stronger than the 16 M.C. signal, trimmers #16 and #24 are not at the proper peak. Turn the trimmer in a turn or so, then readjust as above.

©John F. Rider, Publisher

MODEL R1132 Delco "Delcomatic" Tuner Adjustments, Notes

UNITED MOTORS SERVICE

OPERATION OF DELCOMATIC TUNER

The "Delcomatic Tuner" is a mechanical device which has for its prime purpose the accurate, noiseless and speedy tuning of a station, by the mere push of a button. This function is performed in the following manner:

As the push button on the keyboard is depressed, a pawl arm at the rear of the tuner comes forward and rests against a circular cam. It will be noted that these cams have two different heights (that is, a high and a low side). The purpose of the two different levels will be self-evident as this explanation progresses.

Projecting from the rear of the unit is a set of switches which are motivated by a Bakelite cam arm. This arm is in turn operated by the movement of the pawls. Therefore, it is readily seen that the position of the pawl arm will control the setting of the electrical contacts of the switches in question.

Also located directly above the tuning shaft will be found an auxiliary pair of contacts known as the power contacts.

Before any button is depressed or with the tuner in the manual tuning position, all contact switches are in the position shown in Figure 1.

Now as a button is depressed, the power contacts will automatically be closed and the pawl arm will come forward to rest either upon the high or the low side of the cam, depending upon its position. This will move the Bakelite switch arm to the position shown in Figures 2 or 3. (See Note below.) In either of these positions, the reversing contact will be closed (this contact governs the direction of travel of the tuner in order that the pointer may travel directly to the station). Also, with the Bakelite arm in this position, the starting contacts will close, supplying power to start the motor.

The mute contacts will be closed in order that no noise or signal may come through the speaker until the station is properly tuned in.

Lastly, the A.F.C. contacts are also closed, at the same time, and this serves to remove A.F.C. until the station is tuned in, thus eliminating the possibility of "grasping" the wrong station before the tuner comes to rest.
Now the motor proceeds to drive the mechanism to the proper position for the desired station and as it comes to rest, the following events will occur.

First, the pawl arm will fall into a notch in the circular cam. This in turn causes the Bakelite cam arm to set the rear contact switches in a new position. The starting contacts are now open and the motor power supply is off; also, the mechanism is at rest.

NOTE: IN CHECKING THESE POSITIONS BE SURE TO TURN THE POWER OFF.

The A.F.C. and mute contacts are both open, thus allowing the signal to come through the receiver and also allowing the A.F.C. to function, which in turn puts the finishing touches on a perfectly tuned-in program. This position of the switch showing the station tuned in is shown in Figure 4.

Thus we have completed one entire cycle from push button to the completely tuned program, utilizing the Delcomatic Tuner.

There remain, however, two mechanical features which may be of interest to the service man. One of these is a small star gear on the tuning shaft. When changing from automatic tuning to manual tuning, the button is released by merely turning the tuning knob. This is accomplished by the star gear in question, which pushes the kick-out bar, thus releasing the button.

The second feature mentioned is the friction drive of the tuning mechanism. The rubber ring on the end of the motor shaft engages a metal drive disc on the tuning shaft which serves to drive the mechanism when in the manual tuning position.

Should slippage between these parts occur, due to wear, it is possible to increase the contact pressure by loosening the set screw of the drive disc on the motor shaft. When this is done, then push the rubber wheel to a closer contact and retighten the set screw.

NOTE: DO NOT ATTEMPT TO OPERATE DELCOMATIC TUNER ON ANY VOLTAGE LOWER THAN 105 VOLTS A.C.

SERVICING DELCOMATIC TUNER

1. Be sure the principle of operation, both electrically and mechanically is understood before attempting to service the Delcomatic Tuner.

2. Do not attempt to operate Delcomatic Tuner on any voltage lower than 105 volts A.C.

3. In case of trouble, first check switch contact positions with A.C. power off, against Figures 1 to 4 to see that they correspond to those illustrated. If switch contact springs do not correspond to those illustrated, adjust complete switch assembly by loosening the two screws in the switch support bracket and moving entire switch assembly so that their respective contact positions line up with those as illustrated. Tighten screws in support bracket firmly after proper switch adjustment has been made. If satisfactory operation of switch cannot be obtained by this adjustment, certain of the switch contact springs may be out of adjustment! In this case, if adjustment is required to more than one spring (except reversing contacts) or if a spring is badly out of adjustment, complete replacement of the switch assembly should be made.

4. A clutch is provided on the main cam assembly shaft to absorb the shock from the motor when the pawls drop down into the cam slots. Clutch action is obtained by the pressure of a small horseshoe shaped spring against the #1212590 Driven Gear and Bushing. If this clutch slips it will be necessary to remove any oil or grease with carbon tetrachloride, which may have entered the clutch. If, after cleaning any oil or grease from between the gear and spring, the clutch continues to slip, it will then be necessary to replace the spring, Part #1212616.

5. If motor runs slow and line voltage is over 105 volts, check all mechanical parts to see that they turn freely with power off.

6. If motor does not operate, check to see that switch on front of chassis is in A.F.C. position. Also, when button is depressed, the motor power contacts above tuning shaft and starting contacts on switch behind tuner should be checked to see that they are closed. One set of reversing contacts, depending on whether pawl is on high or low side of cam, should also be closed.

7. It should be noted that when Delcomatic Tuner is in the process of tuning a station, that the "mute" contacts short the control grids of the 6V6 output tubes together. Also, that the "A.F.C." contacts are closed, causing the A.F.C. circuit to be inoperative until station pawl drops in cam slot.

Delco Model R-1132 **Date:** 10-1-37

"SETTING UP" THE DELCOMATIC TUNER

1. Remove the knob on tuning control shaft which is the control in the upper right hand corner of the receiver panel. This knob may be removed by simply pulling it away from the panel. As this knob is removed another knob on the same shaft, partly hidden behind the panel face, will appear.

2. Grasp this knob and pull it out as far as it will go and at the same time "rocking" it so that the gears in the mechanism at the rear will mesh properly.

3. The knob should now be rotated to the right (clockwise) as far as it will go. BE SURE THAT THE KNOB IS TURNED ALL THE WAY UNTIL IT REACHES A DEFINITE STOP.

4. Push any button which you wish to set to a particular station. Be sure the button is pushed all the way in.

5. Grasp the small tuning control knob again and tune the receiver to the desired station. TUNE CAREFULLY MAKING USE OF THE "ROBOT EYE" TO BE SURE THAT YOU ARE CORRECTLY TUNED TO THE STATION IN QUESTION.

6. Push in the next button you wish to set. You will notice that as the second button is pushed in the first one will be released. Now tune in the next station that you wish to set up, again making use of the "robot eye" to be sure that you are correctly tuned to the station.

7. Repeat above operations until all buttons have been set to stations.

8. In order to release the last button, which now remains depressed, grasp the knob on the tuning control shaft and push it back into the cabinet as far as it will go and then pull it out again. Do not forget to "rock" the control when pulling it out in order that its gears may mesh properly.

9. Turn the knob to the LEFT until you reach a definite stop. A firm pressure must be applied, otherwise you will not lock all of the internal controls.

10. Push the small tuning knob back into the cabinet again and put on the large knob that was originally pulled off of this shaft at the start of operations.

11. The "automatic tuner" is now ready for operation and will tune to any station that you have previously selected by merely pushing the button for which that station was set. Labels bearing the names of all stations are supplied with the receiver for use in labeling the push bottons. To label the push buttons you must first remove the cap of the push button. The cap should be pulled off by pulling on the top end which has a small hump that holds the cap on. Then remove the white cardboard tab and insert the label for the station to which the button was set. In replacing the cap start at the bottom and press on the top.

12. YOU DO NOT NEED TO ADJUST THE DELCOMATIC TUNER AGAIN UNLESS YOU DESIRE TO SET ANY ONE OF THE BUTTONS TO A DIFFERENT STATION.

13. If you should desire to again tune manually, merely turn the A.F.C. control knob (lower center knob) to the center or standard position. This will release the automatic tuning mechanism completely.

14. WHEN USING DELCOMATIC TUNING THE A.F.C. CONTROL KNOB MUST BE TURNED TO THE EXTREME RIGHT HAND POSITION.

15. It is not advisable to set up the "automatic tuner" for operation on the Short Wave or Police band. However, the "tuner" may be set up for stations on the police band but extremely accurate tuning such as is obtained on the broadcast band cannot be expected. In this case the automatic tuner will only serve to give the approximate location of the station.

©John F. Rider, Publisher

UNITED MOTORS SERVICE

MODEL R1132 Delco "Delcomatic" Tuner Switch Data

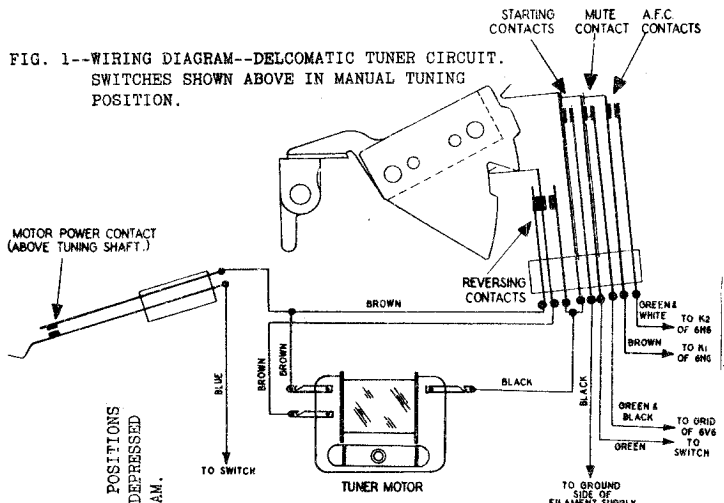

FIG. 1--WIRING DIAGRAM--DELCOMATIC TUNER CIRCUIT. SWITCHES SHOWN ABOVE IN MANUAL TUNING POSITION.

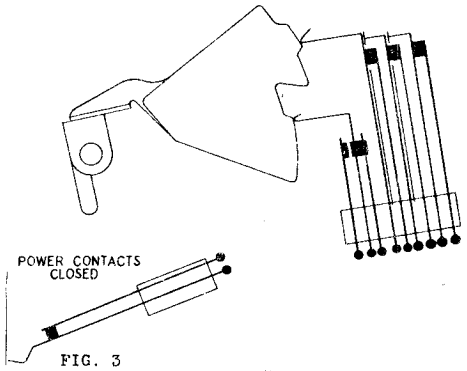

FIG. 3
DELCOMATIC TUNER SWITCHES SHOULD BE IN POSITIONS AS ILLUSTRATED WHEN STATION BUTTON IS DEPRESSED AND PAWL ARM RESTING ON LOW SIDE OF CAM.

FOR SETS BELOW SERIAL #929200

FIG. 2--DELCOMATIC TUNER SWITCHES SHOULD BE IN POSITIONS AS ILLUSTRATED WHEN STATION BUTTON IS DEPRESSED AND PAWL ARM RESTING ON HIGH SIDE OF CAM.

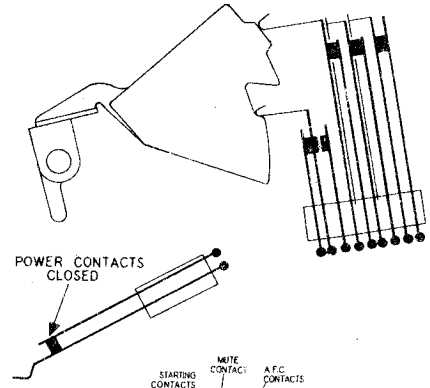

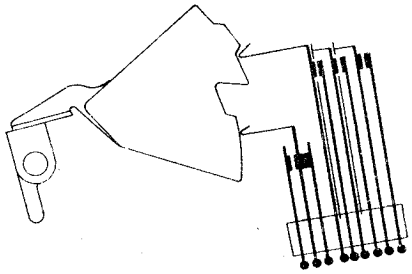

FIG. 4
DELCOMATIC TUNER SWITCHES SHOULD BE IN POSITIONS AS ILLUSTRATED WHEN STATION IS TUNED IN AND MECHANISM IS AT REST.

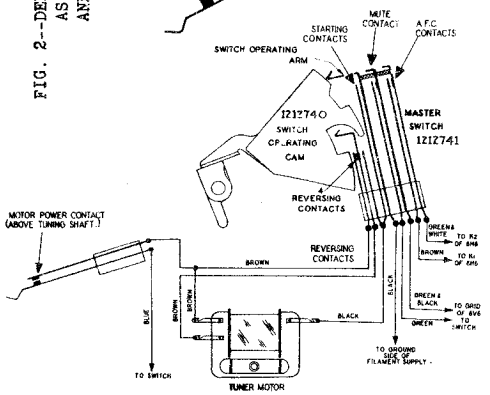

FIG.A1--WIRING DIAGRAM--DELCOMATIC TUNER CIRCUIT. SWITCHES SHOWN ABOVE IN MANUAL TUNING POSITION.

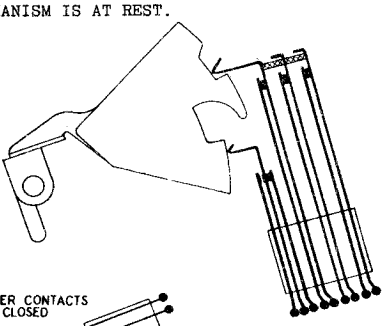

FIG.A3--DELCOMATIC TUNER SWITCHES SHOULD BE IN POSITIONS AS ILLUSTRATED WHEN STATION BUTTON IS DEPRESSED AND PAWL ARM RESTING ON LOW SIDE OF CAM.

Delco Model R-1132
Date: 10-1-37

DELCOMATIC TUNER SWITCH POSITIONS--SETS ABOVE SERIAL #929200

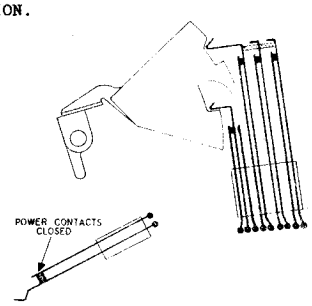

FIG.A2--DELCOMATIC TUNER SWITCHES SHOULD BE IN POSITIONS AS ILLUSTRATED WHEN STATION BUTTON IS DEPRESSED AND PAWL ARM RESTING ON HIGH SIDE OF CAM.

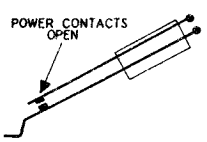

FIG.A4--DELCOMATIC TUNER SWITCHES SHOULD BE IN POSITIONS AS ILLUSTRATED WHEN STATION IS TUNED IN AND MECHANISM IS AT REST.

©John F. Rider, Publisher

MODEL R1132 Delco
"Delcomatic" Tuner
Assembly Views

UNITED MOTORS SERVICE

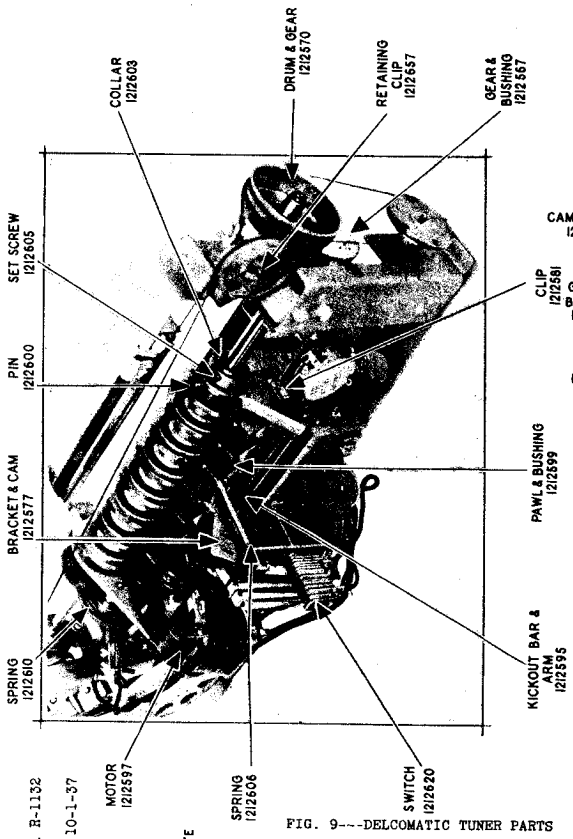

FIG. 9---DELCOMATIC TUNER PARTS

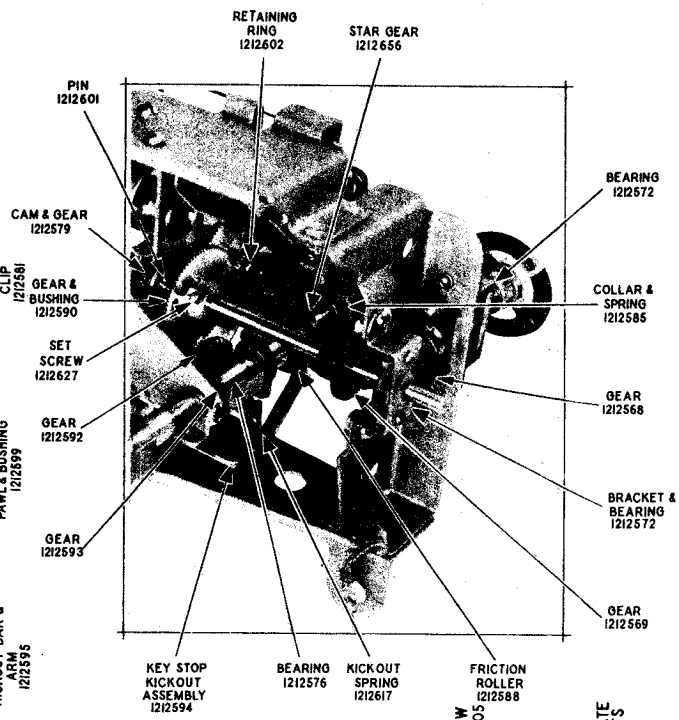

FIG. 10---DELCOMATIC TUNER PARTS

Delco Model R-1132
Date: 10-1-57

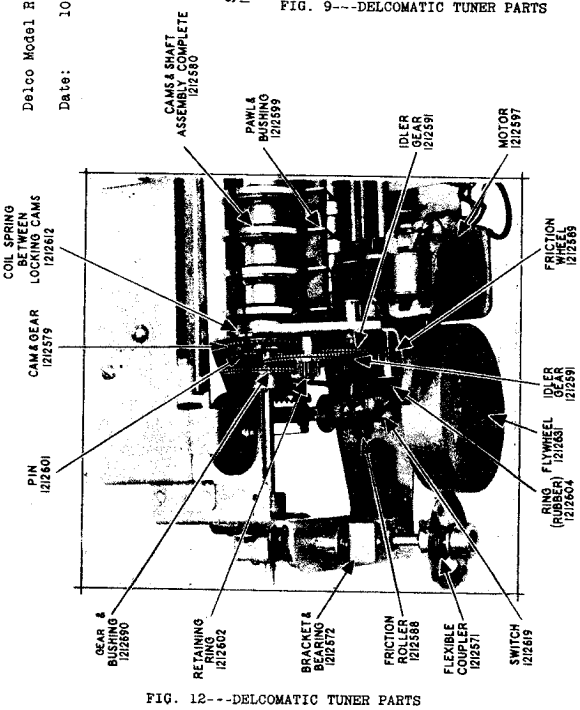

FIG. 12---DELCOMATIC TUNER PARTS

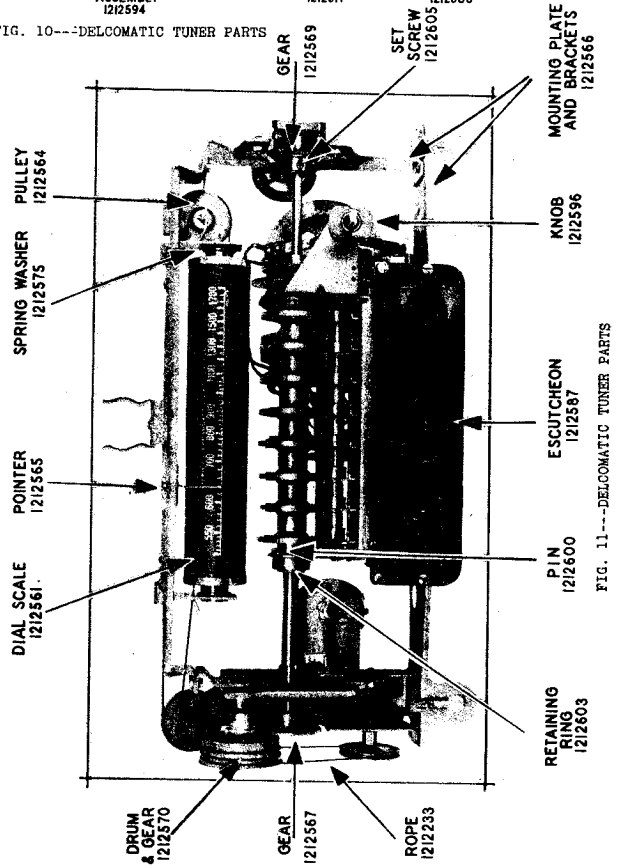

FIG. 11---DELCOMATIC TUNER PARTS

©John F. Rider, Publisher

UNITED MOTORS SERVICE

MODEL R2050 Delco
Schematic, Voltage
Socket, Notes

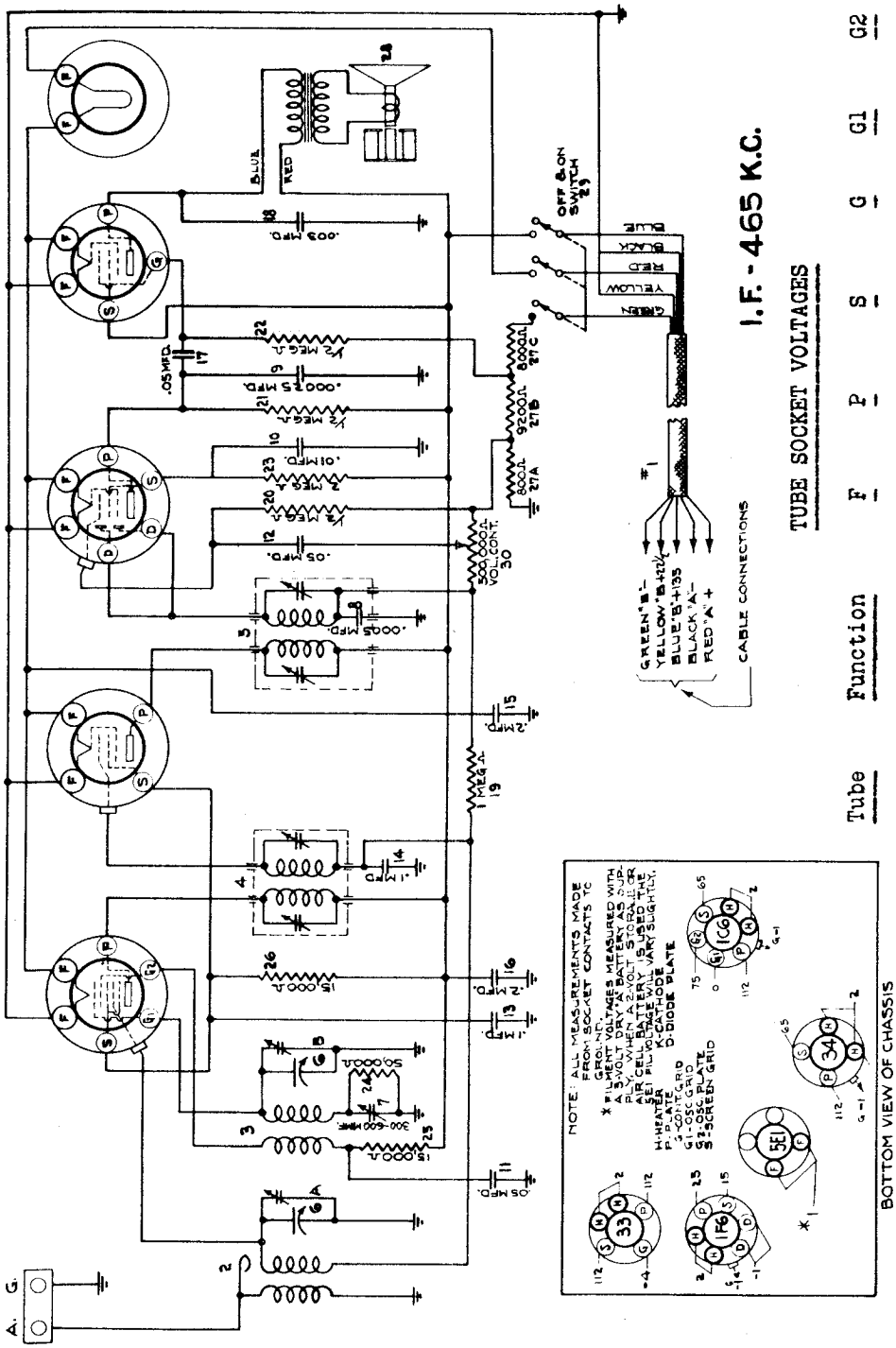

TUBE SOCKET VOLTAGES

Tube	Function	F	P	S	G	G1	G2
1C6	Osc-Mod.	2	112	65	-1	0	75
34	I-F	2	112	65	-1	-	-
1F6	Det.1st A-F	2	25	15	-1	-	-
33	Output	2	112	112	-4	-	-
5E1	Regulator	1	-	-	-	-	-

Readings taken on 3 volt battery from tube socket contacts to ground, with a 1000 ohm per volt meter. 5E1 voltage Regulator filament voltage will vary depending on input voltage to receiver.

Delco Model R-2050

Date: 9-3-36

The Delco Model R-2050 is a five tube, two volt, two band, battery operated receiver with A.V.C. and a voltage regulator. The tubes use are: 1C6 Oscillator-Modulator, 34 I-F Amplifier, 1F6 Diode Detector--A.V.C. and 1st A-F Amplifier, 33 Power Output and a 5E1 Voltage Regulator.

The band coverage of the R-2050 receiver is from 540 to 1720 kilocycles.

The receiver is designed to be operated from 3-45 volt "B" batteries and either a 3 volt dry "A" battery, a 2 volt wet storage battery, or an "Aircell" battery.

©John F. Rider, Publisher

1. Peaking I-F Stages at 465 Kilocycles

(A) Connect the ground lead of the test oscillator to the chassis frame. Connect the other lead to the grid cap of the 1C6 tube through a .02 mfd. series condenser. DO NOT REMOVE THE GRID CLIP.

(B) Set the test oscillator to exactly 465 kilocycles.

(C) Turn the volume control of the receiver on full.

(D) Peak each of the trimmers on the second I-F coil, Illus. #5 on Fig. 1

(E) Peak each of the trimmers on the first I-F coil, Illus. #4 on Fig. 1

(F) In order to assure accurate settings of the I-F trimmers the above adjustments should be repeated using the lowest test oscillator output that will give a reasonable output scale deflection.

2. Aligning R-F Circuits

(A) Remove the test oscillator lead from the grid of the 1C6 tube and connect it to the receiver "Ant." terminal through a .00025 mfd. series condenser.

(B) Check to see that the tuning dial has not slipped on the condenser gang shaft by turning the rotor plates of the gang condenser until they are completely out of mesh, at which point the dial pointer should be at the high frequency end of the dial calibration.

(C) Set the test oscillator frequency and receiver dial to exactly 1720 kilocycles.

(D) Adjust the trimmer mounted on top of the "Osc." section of the gang condenser, Ilus. #6B on Fig. 1, to bring in the 1720 kilocycle test oscillator signal to maximum output.

(E) Set the test oscillator frequency and the receiver dial to exactly 1400 kilocycles.

(F) Adjust trimmer on top of the "Ant." section of the gang condenser, Illus. #6A on Fig. 1, for maximum output.

(G) Set receiver dial at approximately 600 kilocycles, leave the test oscillator connected to the antenna and ground terminals of the receiver.

(H) Set test oscillator frequency to 600 kilocycles.

(I) Adjust the 600 kilocycle oscillator padder condenser accessible through the hole in the top of the chassis adjacent to the gang condenser, while rocking the tuning condenser back and forth for maximum 600 kilocycle signal response.

Connect the set cable wires exactly as indicated on the cable markers. Remove the tubes from their sockets when hooking up batteries and recheck all connections before placing the tubes back in their sockets. The battery connections are as follows:

BATTERY CONNECTIONS

Connection	Lead Color
B -	Green
B + 22½ V.	Yellow
B + 135 V.	Blue
A -	Black
A +	Red

VOLTAGE REGULATOR

The 5E1 Voltage Regulator is used to maintain the filament voltage on the remaining tubes at the correct value of approximately 2 volts in order to adapt the receiver to operation on a 3 volt dry "A" battery and to take care of the normal charge to discharge battery voltage variations.

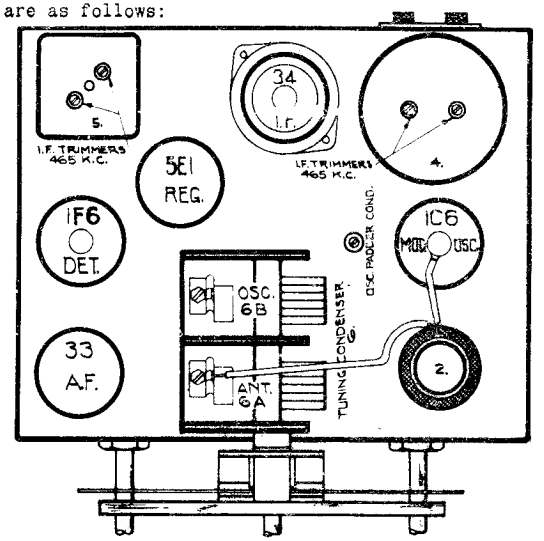

FIG. 2--PARTS LAYOUT--Top View

Delco Model R-2050

Date: 9-3-36

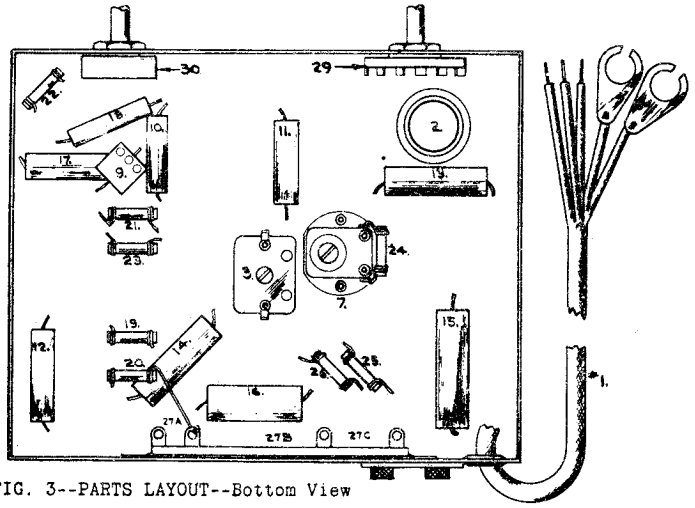

FIG. 3--PARTS LAYOUT--Bottom View

©John F. Rider, Publisher

UNITED MOTORS SERVICE

MODEL R2055 Delco
Schematic, Voltage
Change, Batt. Notes

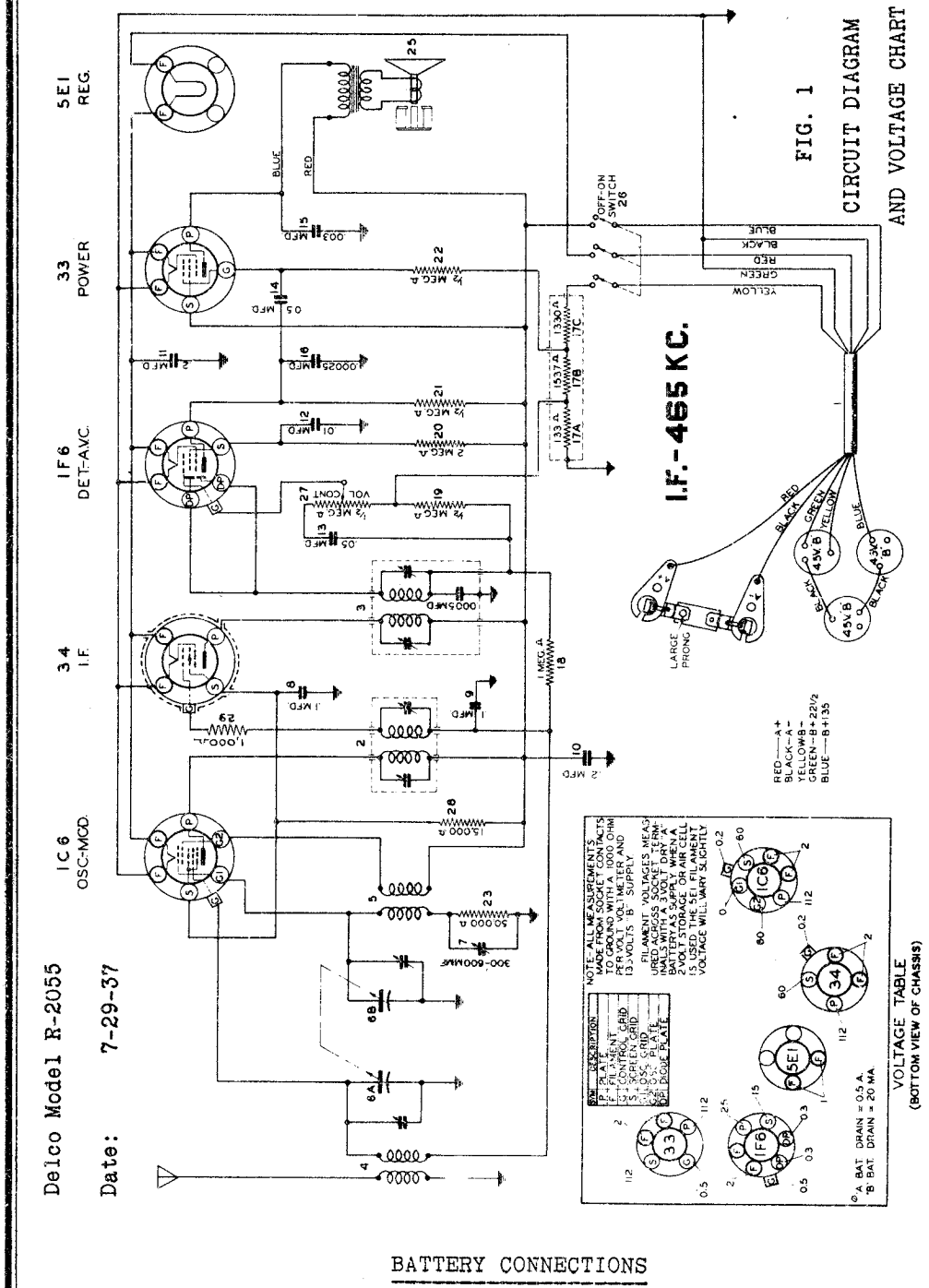

FIG. 1 CIRCUIT DIAGRAM AND VOLTAGE CHART

CIRCUIT CHANGE

Part #1210432 I-F Coil Assembly (Illus. #2) used on the first production of R-2050 sets, was replaced by Part #1212305 I-F Coil Assembly in order to correct a tendency of the I-F stages to oscillate. All service replacements of #1210432 I-F Coils should be made with the new coil #1212305. This coil has a 1000 ohm resistor mounted on the shield can, connected in series with the 34 tube grid.

BATTERY CONNECTIONS

PLUG-IN TYPE CONNECTORS ARE ATTACHED TO ENDS OF SET BATTERY CABLE LEADS--INSERT THESE PLUGS INTO THE PROPER TERMINAL ON TOP OF BATTERIES AND ALL BATTERY CONNECTIONS WILL BE CORRECTLY MADE. IF BATTERIES USED HAVE SCREW TYPE OR FAHNESTOCK TERMINALS REMOVE PLUGS FROM CABLE AND CONNECT WIRES IN ACCORDANCE WITH COLOR CODE.

Connect the set cable wires exactly as indicated on the cable markers. Remove the tubes from their sockets when hooking up batteries and recheck all connections before placing the tubes back in their sockets. The battery connections are as follows:

Lead Color	Connection
Green	B+ 22½
Yellow	B-
Blue	B+ 135
Black	A-
Red	A+

©John F. Rider, Publisher

1. Peaking I-F Stages at 465 Kilocycles

(a) Connect the ground lead of the test oscillator to the chassis frame. Connect the signal lead to the grid cap of the 1C6 tube through a .1 mfd. series condenser. DO NOT REMOVE THE GRID CLIP.
(b) Set the signal generator to exactly 465 kilocycles.
(c) Turn the volume control of the receiver on full.
(d) Peak each of the trimmers on the 2nd I-F coil, Illus. #3 on Fig. 2.
(e) Peak each of the trimmers on the 1st I-F coil, Illus. #2 on Fig. 2.
(f) In order to assure accurate settings of the I-F trimmers, the above adjustments should be repeated using the lowest signal generator output that will give a reasonable output scale deflection.

2. Aligning R-F Circuits

(a) Remove the signal generator lead from the grid of the 1C6 tube and connect it to the receiver "Ant." terminal through a .00025 mfd. series condenser.
(b) Check to see that the tuning dial has not slipped on the condenser gang shaft by turning the rotor plates of the gang condenser until they are completely out of mesh, at which point the dial pointer should be at the high frequency end of the dial calibration.
(c) Set the signal generator frequency and receiver dial to exactly 1720 kilocycles.
(d) Adjust the trimmer mounted on the "Osc." section of the gang condenser, Illus. #6B, Fig. 2, to bring in the 1720 kilocycle signal generator signal to maximum output.
(e) Set the signal generator frequency and the receiver dial to exactly 1400 kilocycles.
(f) Adjust trimmer on the "Ant." section of the gang condenser, Illus. #6A on Fig. 2, for maximum output.
(g) Set receiver dial at approximately 600 kilocycles, leave the signal generator connected to the antenna and ground terminals of the receiver.
(h) Set signal generator frequency to 600 kilocycles.
(i) Adjust the 600 kilocycle oscillator padder condenser, Illus. #7, Fig. 3 accessible through the hole in the top of the chassis adjacent to the gang condenser, while rocking the tuning condenser back and forth for maximum 600 kilocycle signal response.

The Delco Model R-2055 is a five tube, two volt, single band, battery operated receiver with A.V.C. and a voltage regulator. The tubes used are: 1C6 Oscillator-Modulator, 34 I-F Amplifier, 1F6 Diode Detector--A.V.C. and 1st A-F Amplifier, 33 Power Output and a 5E1 Voltage Regulator.

The band coverage of the R-2050 receiver is from 540 to 1720 kilocycles. The receiver is designed to be operated from 3-45 volt "B" batteries and either a 3 volt dry "A" battery, 2 volt wet storage battery, or an "Aircell" battery.

VOLTAGE REGULATOR

The 5E1 Voltage Regulator is used to maintain the filament voltage on the receiver tubes at the correct value of approximately 2 volts in order to adapt the receiver to operation on a 3 volt dry "A" battery and to take care of the normal charge to discharge battery voltage variations.

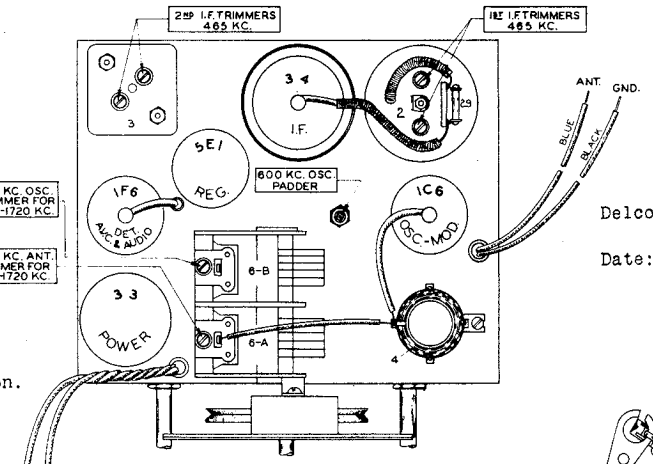

FIG. 2--PARTS LAYOUT--Top View

Delco Model R-2055

Date: 7-29-37

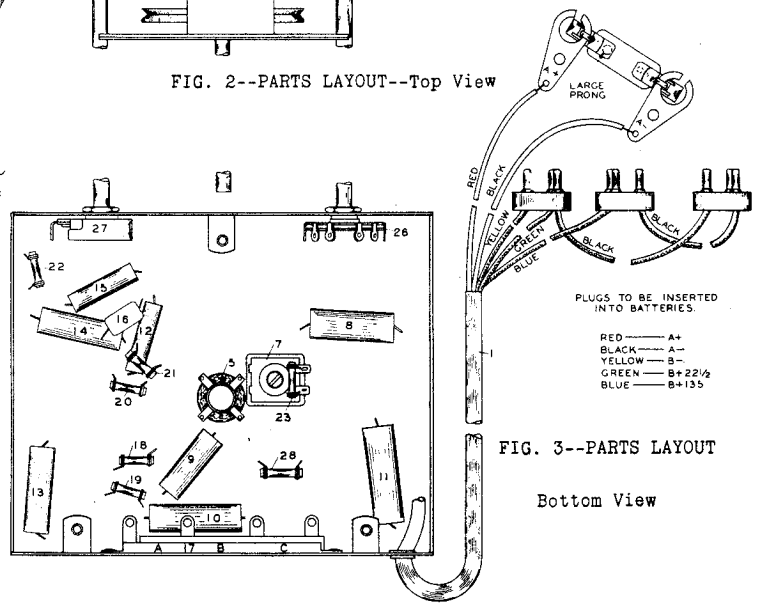

FIG. 3--PARTS LAYOUT

Bottom View

©John F. Rider, Publisher

Trimmers, Chassis
Voltage, Notes

UNITED MOTORS SERVICE

MODELS R3208, R3209 Delco
Schematic, Socket

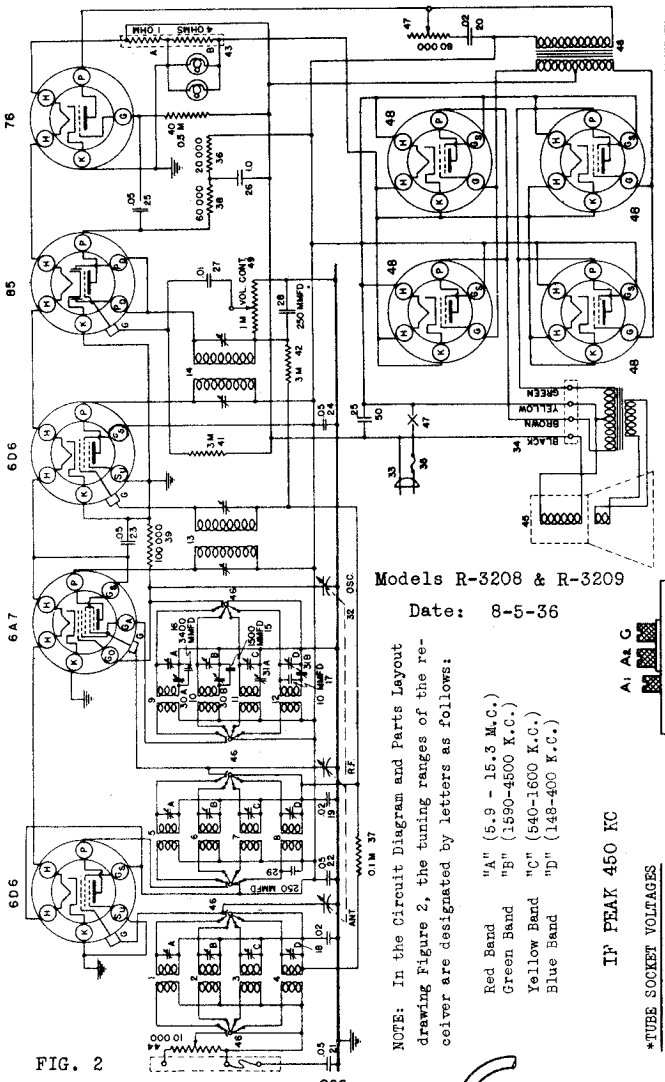

Models R-3208 & R-3209

Date: 8-5-36

NOTE: In the Circuit Diagram and Parts Layout drawing Figure 2, the tuning ranges of the receiver are designated by letters as follows:

Red Band	"A" (5.9 - 15.3 M.C.)
Green Band	"B" (1590-4500 K.C.)
Yellow Band	"C" (540-1600 K.C.)
Blue Band	"D" (148-400 K.C.)

IF PEAK 450 KC

FIG. 2
PARTS LAYOUT--Top View

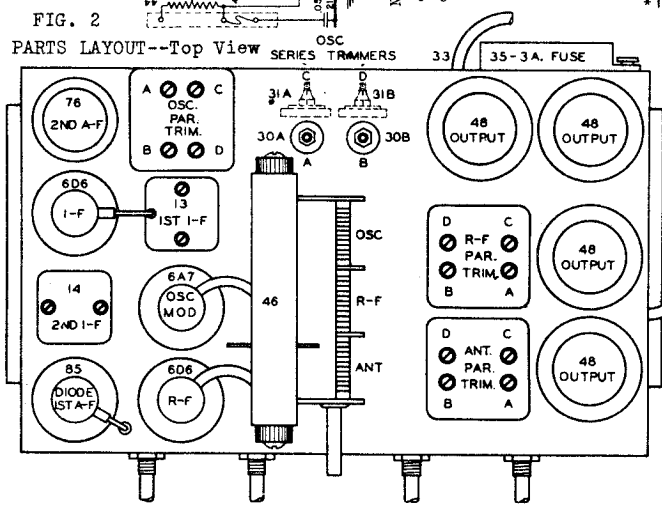

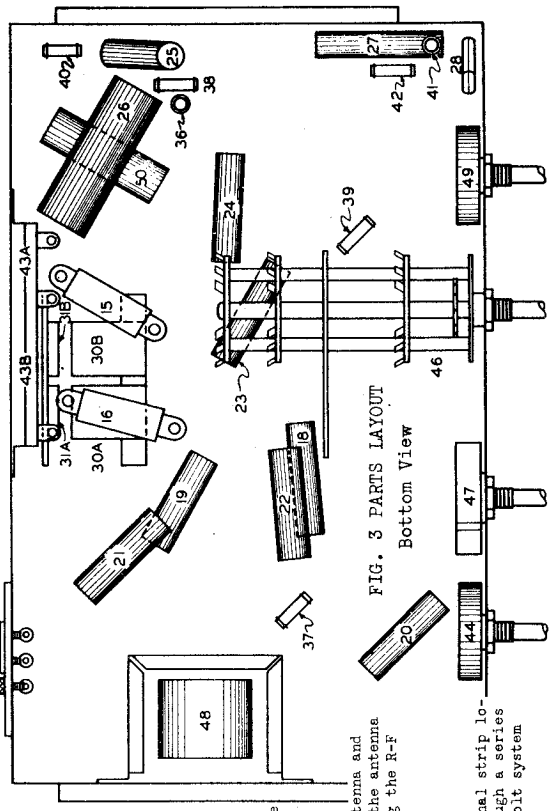

FIG. 3 PARTS LAYOUT
Bottom View

*TUBE SOCKET VOLTAGES

Tube	Function	H	P	Gs	Su	G	Go	Ga	K
6D6	R-F Amplifier	6.4	30.5	30.5	0	0	-	-	0
6A7	Osc-Mod	6.4	30.5	17.6	-	0	**	30.5	0
6D6	I-F Amplifier	6.4	30.5	30.5	0	0	-	-	0
85	Det. & 1st A-F	6.4	9.0	-	-	0	-	-	0
76	A-F Amplifier	6.4	30.0	-	-	0	-	-	0
48	(4) Output	25.2	30.0	30.5	-	1.6	-	-	5.2

Current drain 2.0 amperes at 32 volts.

**Oscillator grid (Go) voltage varies from - 1 at the low frequency end of the dial to - 3 at the high frequency end of the dial.

* Readings taken on 32 volt power supply with 1000 ohms per volt voltmeter from tube socket contacts (except filaments) to chassis.

SENSITIVITY CONTROL

The sensitivity control is a potentiometer connected across the terminals on the antenna and ground terminal strip on the rear of the chassis. The movable arm is connected to the antenna coil. It is used to vary the strength of the signal in order to prevent overloading the R-F amplifier in view of the low plate voltage used.

GROUND CIRCUIT

DO NOT ground the chassis except through the use of the "GND" terminal on the terminal strip located on the rear of the chassis. This terminal connects to the chassis frame through a series condenser in order to prevent a short circuit when operating the receiver on a 32 volt system with the positive side grounded.

©John F. Rider, Publisher

©John F. Rider, Publisher

1. Peaking I-F Stages at 450 Kilocycles — Models R-3208 & R-3209 — Date: 8-5-36

(a) Connect the antenna of the signal generator to the control grid connection on top of the 6A7 tube through a .02 mfd. series condenser. DO NOT REMOVE THE GRID CLIP.

(b) Connect the ground terminal of the signal generator to the ground terminal of the receiver.

(c) Set the signal generator to exactly 450 kilocycles.

(d) Rotate the receiver tuning condenser until the rotor plates are completely out of mesh.

(e) Turn the band selector switch to the Red Band. (First position on left)

(f) Adjust the line voltage to 32 volts.

(g) Turn the volume control and sensitivity control knobs all the way to the right.

(h) With the signal generator set to the lowest usable output level, adjust the I-F trimmer condensers for maximum signal output.

NOTE: The I-F trimmers are located on top of the I-F coils, Fig. 2, and may be adjusted with an insulated screw driver. Always make the adjustments very carefully, going over them several times to insure that the final setting is at resonant frequency.

2. Aligning R-F Circuits Blue Band (148-400 K.C.)

(a) Turn the band selector switch to the first position on the right. (Blue Band)

(b) Rotate the receiver tuning condenser until the rotor plates are completely IN MESH and adjust the dial pointer, if necessary, so that it is exactly horizontal.

(c) Connect the antenna terminal of the signal generator to terminal on the rear of the receiver through a .00025 mfd. mica series condenser.

(d) Set the signal generator to 400 kilocycles.

(e) Rotate the station selector until the rotor plates are completely OUT OF MESH.

(f) Adjust the Blue Band "Osc." parallel trimmer (Fig. 2), for maximum output.

NOTE: If electrical interference causes an excessive reading on the output meter, making alignment difficult, it can be reduced by connecting a 5 to 10 mfd. paper condenser between the ground terminal of the receiver and the chassis frame.

(g) Adjust the Blue Band "R-F" parallel trimmer, (Fig. 2), for maximum output.

(h) Adjust the Blue Band "Ant" parallel trimmer, (Fig. 2), for maximum output.

(i) Repeat operations (f), (g) and (h) until no further improvement in output can be obtained.

(j) Set the signal generator to 150 kilocycles.

(k) Tune in the 150 kilocycle signal with the station selector in the region of 15 on the dial (Blue Band), for maximum reading on the output meter.

(l) Adjust the Blue Band oscillator series trimmer, (Illus. #31B, Fig. 2) while rocking the condenser gang plates back and forth slightly, until no further increase in output can be obtained.

(m) Repeat operations (f), (g) and (h) for more accurate adjustments.

3. Aligning R-F Circuits - Yellow Band (540-1600 K.C.)

(a) Turn the band selector switch to the second position from the right. (Yellow Band)

(b) Set the signal generator to 1400 kilocycles.

(c) Rotate the station selector until the pointer points to 140. (Yellow Band)

(d) Adjust the Yellow Band "Osc." parallel trimmer, (Fig. 2), for maximum signal output.

(e) Adjust the Yellow Band "R-F" parallel trimmer, (Fig. 2), for maximum signal output.

(f) Adjust the Yellow Band "Ant" parallel trimmer, (Fig. 2), for maximum signal output.

(g) Repeat operations (d), (e) and (f).

(h) Set the signal generator to 600 kilocycles.

(i) Tune in the 600 kilocycle signal with the station selector in the region of 60 on the dial (Yellow Band), for maximum reading on the output meter.

(j) Adjust the Yellow Band oscillator series trimmer, (Illus. #31A, Fig. 2) while rocking the condenser gang plates back and forth slightly, until no further increase in output can be obtained.

(k) Repeat operations (d), (e) and (f) for more accurate adjustments.

4. Aligning R-F Circuits - Green Band (1590-4500 K.C.)

(a) Turn the band selector switch to the second position from the left. (Green Band)

(b) Set the signal generator to 4000 kilocycles.

(c) Rotate the station selector until the pointer points to 4.0. (Green Band)

(d) Adjust the Green Band "Osc." parallel trimmer, (Fig. 2), for maximum signal output.

(e) Adjust the Green Band "R-F" parallel trimmer, (Fig. 2), for maximum signal output.

(f) Adjust the Green Band "Ant." parallel trimmer, (Fig. 2), for maximum signal output.

(g) Repeat operations (d), (e) and (f).

(h) Set the signal generator to 1700 kilocycles.

(i) Tune in the 1700 kilocycle signal with the station selector in the region of 1.7 on the dial (Green Band), for maximum reading on the output meter.

(j) Adjust the Green Band oscillator series trimmer (Illus. #30B, Fig. 2) while rocking the condenser gang plates back and forth slightly, until no further increase in output can be obtained.

(k) Repeat operations (d), (e) and (f) for more accurate adjustments.

5. Aligning R-F Circuits - Red Band (5,900-15,300 K.C.)

(a) Replace the .00025 series condenser in the output lead from the signal generator with a 400 ohm, carbon resistor.

(b) Turn the band selector switch to the first position on the left. (Red Band)

(c) Set the signal generator to 15 megacycles. (15,000 K.C.)

(d) Rotate the station selector until the pointer points to 15. (Red Band)

(e) Adjust the Red Band "Osc." parallel trimmer, (Fig. 2), for maximum signal output.

(f) Adjust the Red Band "R-F" parallel trimmer, (Fig. 2), for maximum signal output.

(g) Adjust the Red Band "Ant." parallel trimmer, (Fig. 2), for maximum signal output.

(h) Repeat operations (e), (f) and (g).

(i) Set the signal generator to 6 megacycles. (6000 K.C.)

(j) Tune in the 6 megacycle signal with the station selector in the region of 6.0 on the dial (Red Band) for maximum reading on the output meter.

(k) Adjust the Red Band oscillator series trimmer (Illus. #30A, Fig. 2) while rocking the condenser gang plates back and forth slightly, until no further increase in output can be obtained.

(l) Repeat operations (e), (f) and (g) for more accurate adjustments.

GENERAL: The Delco Models R-3208 (table model) and R-3209 (console model) employ the same chassis which is a nine tube, 32 volt, four band receiver. The tubes used are 6D6 R-F amplifier, 6A7 Oscillator-Modulator, 6D6 I-F Amplifier, 85 Detector and A-F Amplifier and four type 48 output tubes in push-pull parallel.

UNITED MOTORS SERVICE

MODEL R3212 Delco
Schematic, Voltage

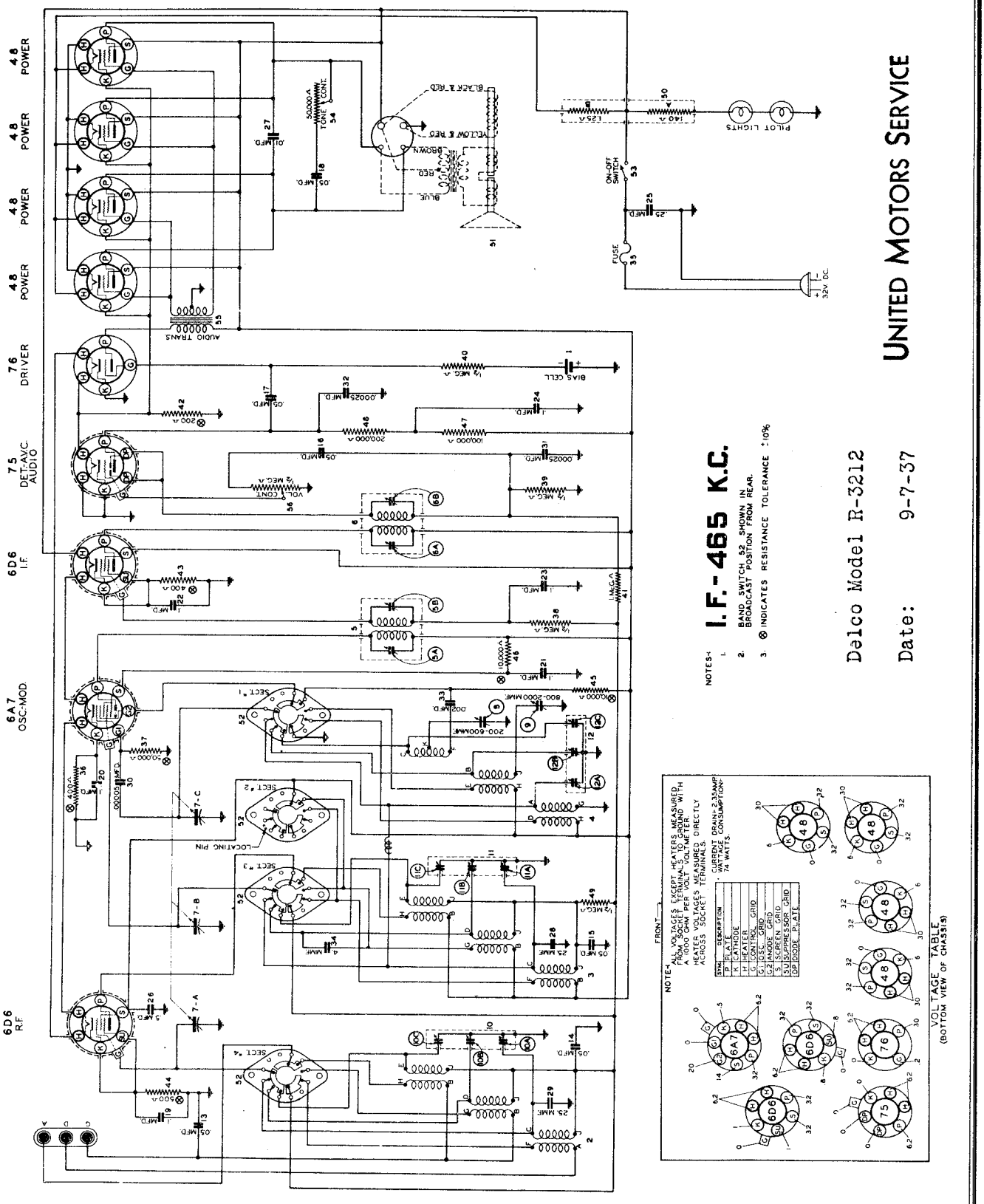

FIG. 1--DELCO MODEL R-3212 CIRCUIT DIAGRAM & VOLTAGE CHART

©John F. Rider, Publisher

MODEL R3212 Delco
Socket, Trimmers
Chassis, Notes

UNITED MOTORS SERVICE

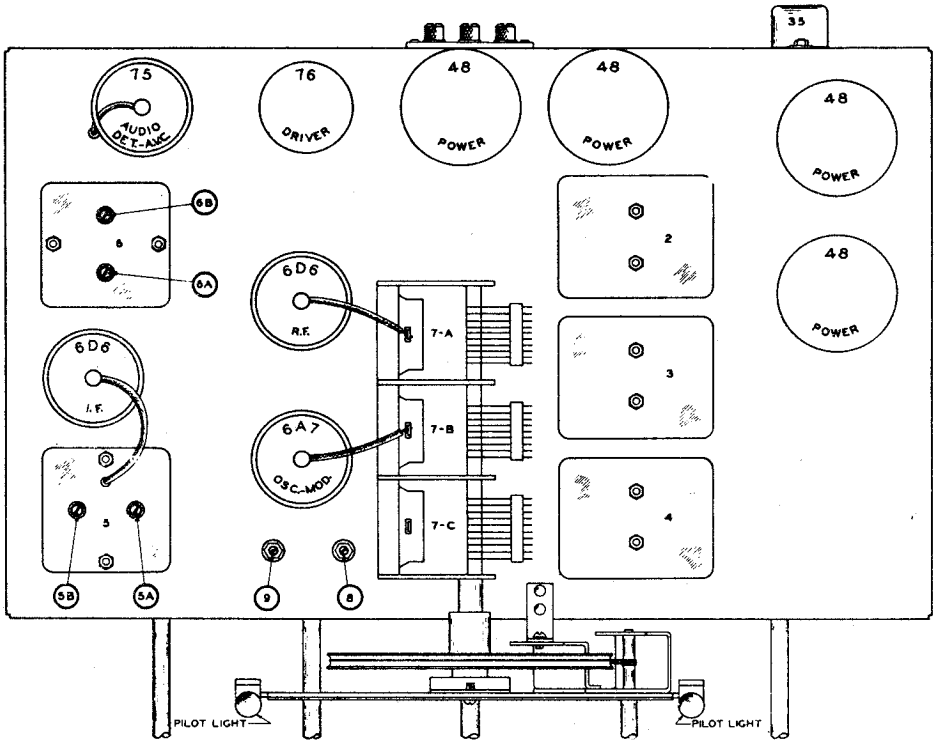

FIG. 2--PARTS LAYOUT--Top View

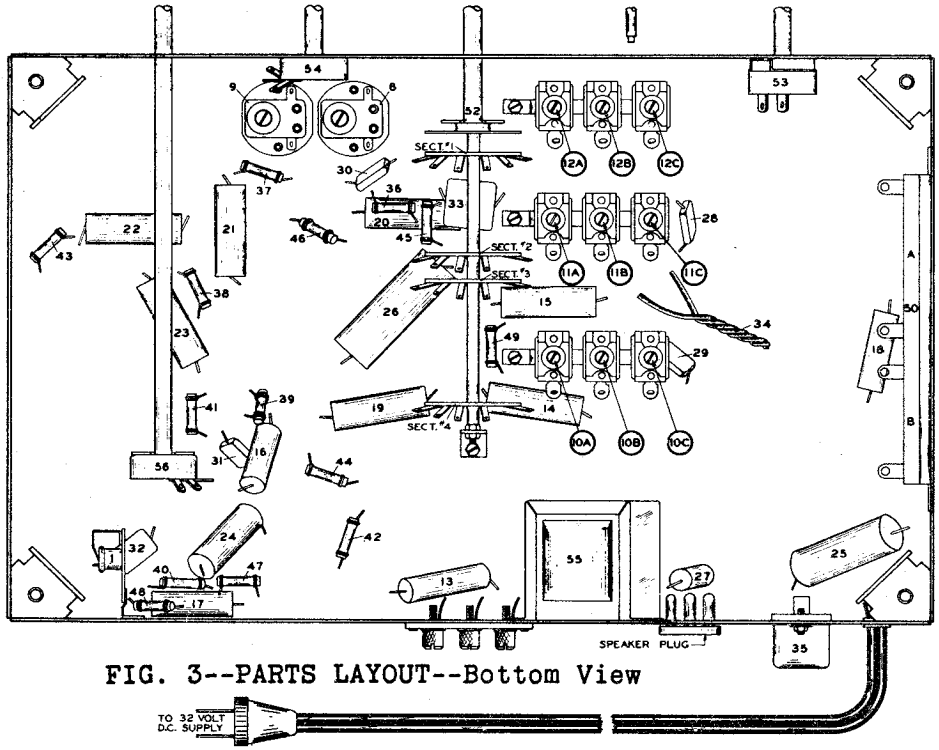

FIG. 3--PARTS LAYOUT--Bottom View

The Delco Model R-3212 is a nine tube, three band 32 volt operated superheterodyne receiver with AVC, tone control and an electro-dynamic speaker. The tubes used are: 6A7 Oscillator-Modulator, 6D6 R.F. Amplifier, 6D6 I.F. Amplifier, 75 Detector AVC and 1st Audio, 76 Driver, and four type 48 Output Tubes in push-pull parallel.

The frequency ranges on the bands covered are: American Broadcast Band 540-1720 kilocycles, Police and Amateur Band 2230 to 7500 kilocycles, and the Foreign Short Wave Band 7.15-18.5 megacycles.

Delco Model R-3212

Date: 9-7-37

TUBE SOCKET VOLTAGES

A bottom view of the chassis is shown in Fig. 1 (Circuit Diagram) on which the voltages to ground at each of the tube socket contacts are indicated.

©John F. Rider, Publisher

UNITED MOTORS SERVICE

MODEL R3212 Delco
Alignment

Peaking I.F. Stages at 172 K.C.

(a) Connect the ground lead of the test oscillator to the chassis frame. Connect a .5 mfd. condenser in series with the other lead and connect this lead to the grid cap of the 6A7 tube, leaving the tube's grid clip in place. The .5 mfd. condenser is necessary to prevent the oscillator circuit of the receiver from affecting the I.F. adjustments.

(b) Set the test oscillator on 172 kilocycles.

(c) Turn the volume control of the receiver on full.

(d) Peak each of the I.F. trimmers on the 2nd I.F. coil, Illus. #9 on Fig. 2.

(e) Then peak each of the trimmers on the 1st I.F. coil, Illus. #8 on Fig. 2.

NOTE:
In order to insure accurate settings of the I.F. trimmers the above adjustments should be repeated using the lowest oscillator output that will give a reasonable output meter scale deflection. Make all adjustments for maximum output.

Peaking Gang Condenser at 1530 K.C.

(a) Connect the output of the test oscillator to the antenna connection of the receiver and to the chassis ground. (Do not use the .5 mfd. condenser that was required in aligning the I.F. stages.)

(b) Turn the rotor plates of the gang condenser until they are COMPLETELY OUT OF MESH.

(c) Set the test oscillator on 1530 kilocycles.

(d) Adjust the trimmer for the oscillator section of the gang condenser (middle section) CAREFULLY for maximum output. Then adjust the trimmers for the "R.F." and "ANT." sections of the gang condenser also for maximum output.

Tracking Oscillator at 540 K.C.

(a) Turn the condenser plates until they are COMPLETELY IN MESH.

(b) Set test oscillator at 540 kilocycles. (Leave test oscillator leads connected to antenna and ground of receiver.)

(c) Adjust the oscillator tracking condenser (Illus. #24 on Fig. 3) located on the bottom of the chassis until the 540 K.C. signal is tuned in with maximum output.

Peaking Gang Condenser at 1400 K.C.

(a) Set the test oscillator at 1400 kilocycles.

(b) Turn the condenser rotor plates until the 1400 K.C. signal from the test oscillator is tuned in with maximum output.

(c) Readjust the parallel trimmers for the "R.F." and "ANT." sections of the gang condenser (shown on Fig. 2) for maximum output. DO NOT DISTURB the setting of the "OSC." section of the gang condenser as this is adjusted at 1530 K.C. only, and any further adjustments at this point will affect both the tuning range of the receiver and the tracking of its circuits.

Adjusting Receiver to Car Antenna

NOTE: An antenna compensating condenser is provided in the antenna circuit of this receiver that must be adjusted to the particular car antenna the receiver is to be used on. The test oscillator cannot be used for this adjustment due to the fact that capacity of its output circuit will not match the wide range of antenna capacities being used. Therefore, it is necessary that the adjustment be made after the receiver is installed on the car and is done in the following manner:

(a) Tune the receiver to a weak broadcast station on the low frequency end of the dial 550 to 700 K.C.

(b) Adjust the antenna compensating condenser for maximum response from the broadcast station. This condenser is shown as Illus. #23 on Fig. 3 and is located immediately to the rear of the speaker plug on the side of the receiver.

PART NO. 1209525 FILTER ASSEMBLY

Part No. 1209525 Filter Assembly is part of the "B" supply filter circuit and choke, R.F. filter choke along with an .06 mfd. 600 volt condenser sealed in a separate container. In case any of the parts used in this assembly are found to be defective it will be necessary to replace the complete filter assembly. The power transformer is mounted on top of the container for the filter assembly and both of these units are covered by the transformer can which may be removed by taking out the self-tapping screws which hold the can to its lower lid on the base of the receiver.

CIRCUIT CHANGES

On the part #1210009 Condenser Block, it will be found on some receivers that the sections having a black lead (18G) and blue lead (18G) are not used. In using the service replacement stock of part #1210009 Condenser Blocks, simply cut off either or both of the blue or black leads close to the block if they are not found on the defective block removed from the receiver. A number of receivers used a small tubular .01 mfd. condenser in place of the .01 section (18G) on this Condenser Block. If this condenser becomes defective--replace with a part #1210080 condenser.

CHASSIS PARTS

Part No.	Part Name	Description	Illus No.
1210022	Case	Chassis--less covers	
1209574	Case	Power transformer	
1207683	Clip	Grid connector	
1210011	Cloth	Speaker grille--incl. ring	
1210008	Coil	Antenna	5
1209528	Coil	R.F.	6
1209529	Coil	Oscillator	7
1210013	Coil assy.	1st I.F.	8
*1210015	Coil assy.	2nd I.F. (incl. 38, 41, 43)	9
**1210017	Coil assy.	2nd I.F. (incl. 38, 41, 43, 48)	9
1209571	Coil	Tube filament choke	10
1209572	Coil	Vibrator "A" choke	11
1209530	Condenser	3 gang tuning	15
1209531	Condenser	Electrolytic block	16
	Sec. A	16 mfd.	
	Sec. B	8 mfd.	
	Sec. C	8 mfd.	
1209532	Condenser	By-pass block	17
	Sec. A	.5 mfd., 160 volt	
	Sec. B	.5 mfd., 160 volt	
1210009	Condenser***	Filter block	18
	Sec. A	.4 mfd., 160 volt	
	Sec. B	.05 mfd., 200 volt	
	Sec. C	.05 mfd., 160 volt	
	Sec. D	.05 mfd., 400 volt	
	Sec. E	.02 mfd., 160 volt	
	Sec. F	.04 mfd., 200 volt	
	Sec. G	.01 mfd., 400 volt	
1209055	Condenser	Molded .00025 mfd.	19
1209055	Condenser	Molded .00025 mfd.	20
1209055	Condenser	Molded .00025 mfd.	21
1207625	Condenser	Molded .00005 mfd.	22
1209535	Condenser	Antenna compensating	23
1209536	Condenser	Oscillator tracking	24
1210010	Condenser	Tubular .02 mfd., 200 volt	25
1207908	Condenser	Tubular .1 mfd., 160 volt	26
1207908	Condenser	Tubular .1 mfd., 160 volt	27
1209538	Condenser	Molded .00095 mfd.	29
1209556	Condenser	Molded .0005 mfd.	30
*1209525	Filter assy.	"B" power	33
	Sec. A	.06 mfd. condenser	
	Sec. B	R.F. choke	
	Sec. C	Audio choke	
1204136	Resistor	Carbon 200,000 ohms 1/3 watt	35
1204136	Resistor	Carbon 200,000 ohms 1/3 watt	36
1207943	Resistor	Carbon 75,000 ohms 1/3 watt	37
1204138	Resistor	Carbon 500,000 ohms 1/3 watt	38
1204140	Resistor	Carbon 50,000 ohms 1/3 watt	39
1207905	Resistor	Carbon 150,000 ohms 1/3 watt	40
1207905	Resistor	Carbon 150,000 ohms 1/3 watt	41
1207905	Resistor	Carbon 150,000 ohms 1/3 watt	42
1208232	Resistor	Carbon 1 megohm 1/3 watt	43
1208959	Resistor	Carbon 30,000 ohms 1 watt	44
1209405	Resistor	Carbon 20,000 ohms 1/3 watt	45
1209542	Resistor	Candohm strip	46
	Sec. A	Res. 110 ohms	
	Sec. B	Res. 800 ohms	
	Sec. C	Res. 550 ohms	
	Sec. D	Res. 440 ohms	
1209650	Resistor	Carbon 400 ohms 1/3 watt	47
1209491	Resistor	Carbon 25,000 ohms 1 watt	49
1208756	Resistor	Carbon 250,000 ohms 1/3 watt	50
1208806	Ring	Tube shield	
1209583	Shield	Antenna coil	
1209584	Shield	R.F. coil	
1209594	Shield	Vibrator socket	
1210012	Shield	I.F. coils	
1209066	Shield	Tube	
1209548	Sleeve	Volume control shaft	
1209070	Socket	6F7 tube	
1209069	Socket	6A7 tube	
1209068	Socket	6B7 tube	
1209067	Socket	42 tube	
1210025	Speaker	Unit only--dynamic	54
1209592	Spring	Vibrator grounding	
1209921	Spring	Vibrator retaining	
1209550	Term. assy.	On power trans.	
1209562	Term. assy.	On R.F. coil	
1210014	Terminal	In 2nd I.F. coil	
1209570	Transformer	Vibrator power	55
1210019	Transformer	Output--on speaker	56
5039661	Vibrator	Plug-in synchronous	57
1209540	Volume control	Res. 1.5 megohms	58

* Used only on sets BELOW serial #0383500.
** Used only on sets ABOVE serial #0383500.
*** See "CIRCUIT CHANGES".

©John F. Rider, Publisher

MODEL R6011 Delco
Socket, Trimmers
Chassis, Changes

UNITED MOTORS SERVICE

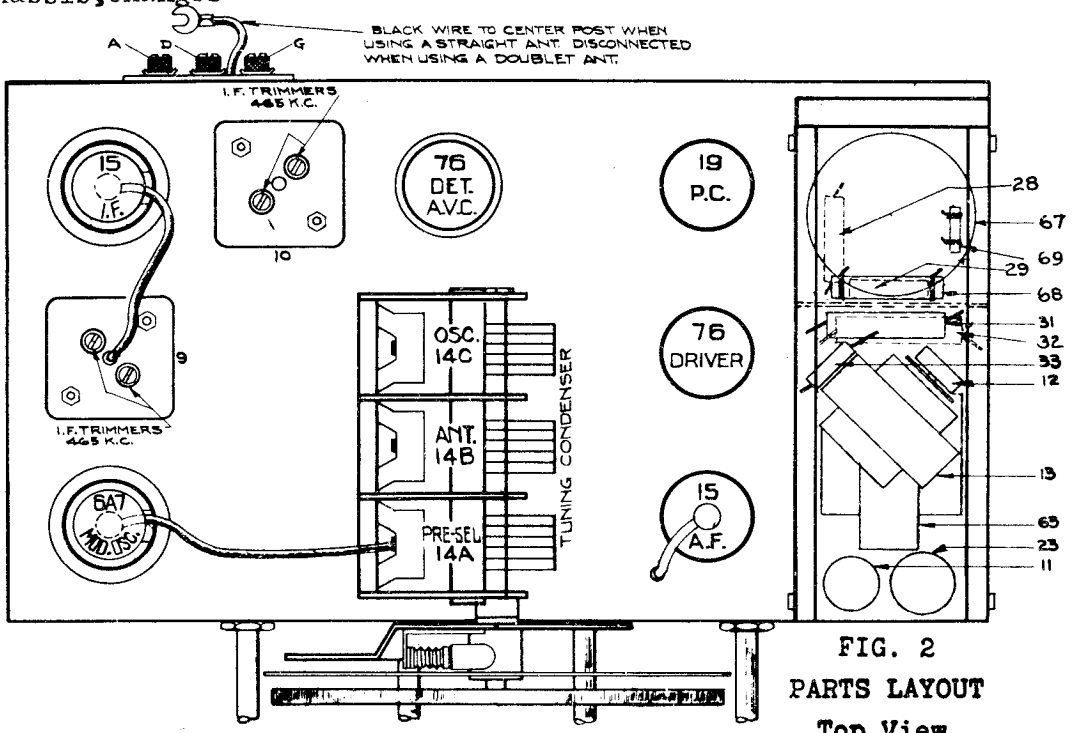

FIG. 2
PARTS LAYOUT
Top View

Delco Model R-6011 Date: 9-8-36

All R-6011 receivers incorporating the above changes can be identified by the letter "A" stamped on the rear of their chassis. The Circuit Diagram for these receivers is shown in Fig. 1A.

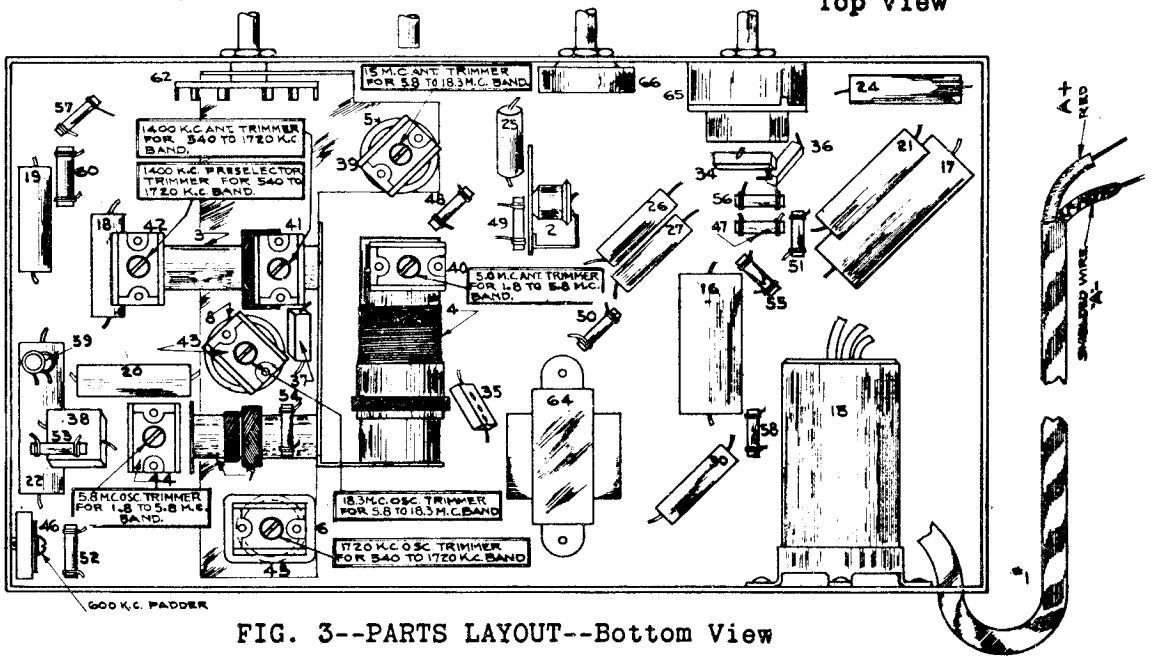

FIG. 3--PARTS LAYOUT--Bottom View

CIRCUIT CHANGES

The following changes have been made in the Circuit Diagram of the R-6011 receiver as shown in Fig. 1.

1. The .01 mfd. 1200-volt condenser, Illus. 32, connected across secondary of vibrator transformer was removed.

2. A 5000 ohm 1-watt resistor was added to the chassis and connected in series with condenser .01 mfd. Illus. #31.

3. A 150 ohm 1/3-watt resistor was added to the chassis and connected in the primary circuit of the vibrator transformer.

©John F. Rider, Publisher

UNITED MOTORS SERVICE

MODEL R6011 Delco
Schematic, Voltage
Change, Notes

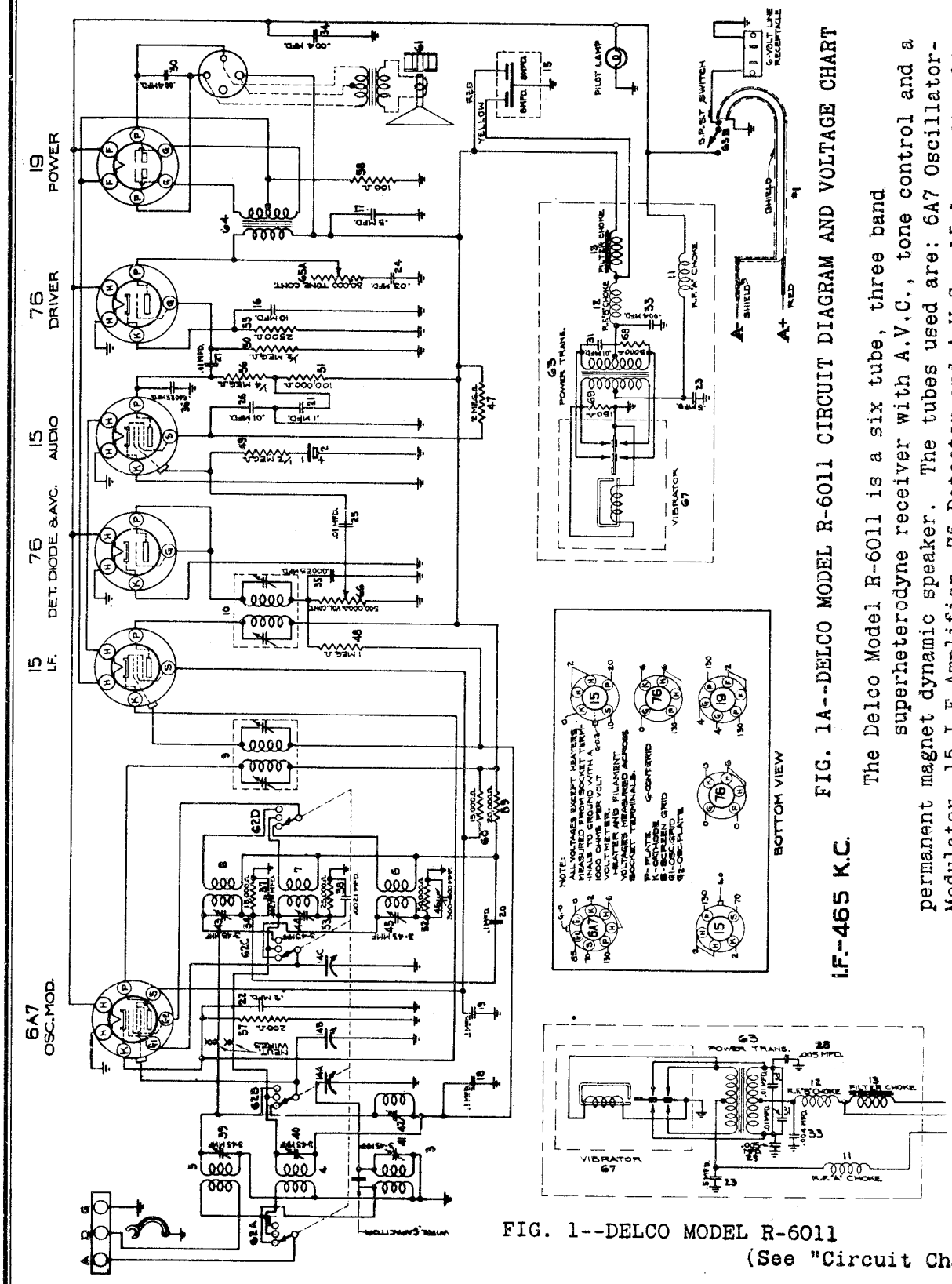

FIG. 1A--DELCO MODEL R-6011 CIRCUIT DIAGRAM AND VOLTAGE CHART

The Delco Model R-6011 is a six tube, three band superheterodyne receiver with A.V.C., tone control and a permanent magnet dynamic speaker. The tubes used are: 6A7 Oscillator-Modulator, 15 I-F Amplifier, 76 Detector and A.V.C., 15 1st Audio, 76 Driver and a Type 19 Output tube.

Delco Model R-6011 Date: 9-8-36 This receiver is designed to be operated from a six volt storage battery.

FIG. 1--DELCO MODEL R-6011

(See "Circuit Changes")

The frequency ranges on the bands covered are: American Broadcast Band (Yellow) 540 to 1720 kilocycles, Police and Amateur Band (Green) 1800 to 5800 kilocycles, and the Foreign Short Wave (Red) 5.8 to 18.3 megacycles.

©John F. Rider, Publisher

MODEL R6011 Delco
Alignment, Voltage

UNITED MOTORS SERVICE

Delco Model R-6011

Date: 9-8-38

1. Peaking I-F Stages at 465 Kilocycles

(a) Connect the ground lead of the test oscillator to the chassis frame. Connect the other lead to the grid cap of the 6A7 tube through a .1 mfd. series condenser. DO NOT REMOVE THE GRID CLIP.

(b) Set the test oscillator to exactly 465 kilocycles.

(c) Turn the volume control of the receiver on full.

(d) Peak each of the trimmers on the 2nd I-F coil, Illus. #10 on Fig. 1.

(e) Peak each of the trimmers on the 1st I-F coil, Illus. #9 on Fig. 1.

(f) In order to assure accurate settings of the I-F trimmers the above adjustments should be repeated using the lowest test oscillator output that will give a reasonable output meter scale defection.

2. Aligning R.F. Circuits--Foreign Band (5.8-18.3 Megacycles)

(a) Remove the test oscillator lead from the grid of the 6A7 tube and connect it to the receiver antenna terminal through a 400 ohm carbon resistor.

(b) Check to see that the tuning dial has not slipped on the condenser gang shaft by turning the rotor plates of the gang condenser until they are completely out of mesh, at which point the dial pointer should be at the high frequency end of the dial calibration.

(c) Set the test oscillator frequency and receiver dial to exactly 18.3 megacycles.

(d) Adjust the 18.3 megacycle oscillator trimmer, Illus. #43 on Fig. 2, to bring in the 18.3 megacycle test oscillator signal with maximum output. NOTE: When adjusting this trimmer two peaks, the fundamental and the image peak will be noticed. CARE MUST BE TAKEN THAT THE FUNDAMENTAL PEAK AND NOT THE IMAGE PEAK IS USED FOR ALIGNING THE RECEIVER AT 18.3 MEGACYCLES. Always back off the trimmer to minimum capacity, then screw down the trimmer (add capacity) until the first peak which is the fundamental and the proper one to use is tuned in. If the trimmer is screwed down beyond the point where the first peak is received, the incorrect image peak will be tuned in. After completing adjustment of the oscillator trimmer at 18.3 megacycles always check to see if the proper peak has been used. To do this leave test oscillator frequency at 18.3 megacycles, increase the output of the test oscillator and tune the receiver dial to approximately 17.3 megacycles Then vary the receiver dial slightly to the right and left of 17.3 megacycles, and if the fundamental peak was used in aligning at 18.3 megacycles the test oscillator signal will be heard at approximatey 17.3 megacycles on the receiver dial. If it is not possible to receive the signal, then the fundamental peak was not used and the 18.3 megacycle oscillator trimmer must be properly readjusted.

(f) Set the test oscillator frequency and the receiver dial to exactly 15 megacycles.

(g) Adjust 15 megacycle antenna trimmer, Illus. #39 on Fig. 2, to maximum output.

3. Aligning R.F. Circuits--Police-Amateur Band (1.8-5.8 Megacycles)

(a) Set test oscillator frequency and receiver dial to exactly 5.8 megacycles.

(b) Adjust 5.8 megacycle oscillator trimmer, Illus. #44 on Fig. 2, to bring in 5.8 megacycle test oscillator signal with maximum output.

(c) Set test oscillator frequency and receiver dial to exactly 5 megacycles.

(d) Adjust 5 megacycle antenna trimmer, Illus. #40 on Fig. 2, for maximum output.

4. Aligning R.F. Circuits--American Broadcast Band (1720-540 Kilocycles)

(a) Set test oscillator frequency and receiver dial to exactly 1720 Kilocycles. Replace 400 ohm series resistor with a .00025 mfd. condenser.

(b) Adjust 1720 kilocycle oscillator trimmer, Illus. #45 on Fig. 2, to bring in 1720 kilocycle test oscillator signal to maximum output.

(c) Set test oscillator frequency and receiver dial to exactly 1400 kilocycles.

(d) Adjust 1400 kilocycle antenna and preselector trimmers, Illus. #41 and #42 on Fig. 2, for maximum output.

(e) Set receiver dial and test oscillator frequency to approximately 600 kilocycles, leaving the test oscillator connected to antenna and ground terminals of the receiver.

(f) Adjust 600 kilocycle oscillator padder condenser, Illus. #46 on Fig. 2, rocking tuning condenser back and forth for maximum 600 kilocycle signal response.

NOTE: A bottom view of the chassis is shown in Fig. 1 & 1A (Circuit Diagram) on which the voltages to ground at each of the tube socket contects are indicated.

TUBE SOCKET VOLTAGES

Tube	Function	H	P	S	G1	G2	G	K
6A7	Osc.-Mod.	6	130	60	0	75	0	2
15	I-F Amp.	2	130	60	--	--	0	2
76	Det.-A.U.C.	6	0	--	--	--	0	0
15	1st Audio	2	25	15	--	--	0	0
76	Driver	6	130	--	--	--	0	6
19	Output	2	130	--	--	--	4	--

Readings taken on a 6-volt battery from tube socket contacts to ground, with a 1000-ohm per volt D.C. meter.

Ampere drain--2.3 amps.

©John F. Rider, Publisher

UNITED MOTORS SERVICE

MODEL R6012 Delco
Schematic, Voltage
Changes

FIG. 1A--DELCO MODEL R-6012 CIRCUIT DIAGRAM AND VOLTAGE CHART
(Chassis marked with letter "C" on rear)

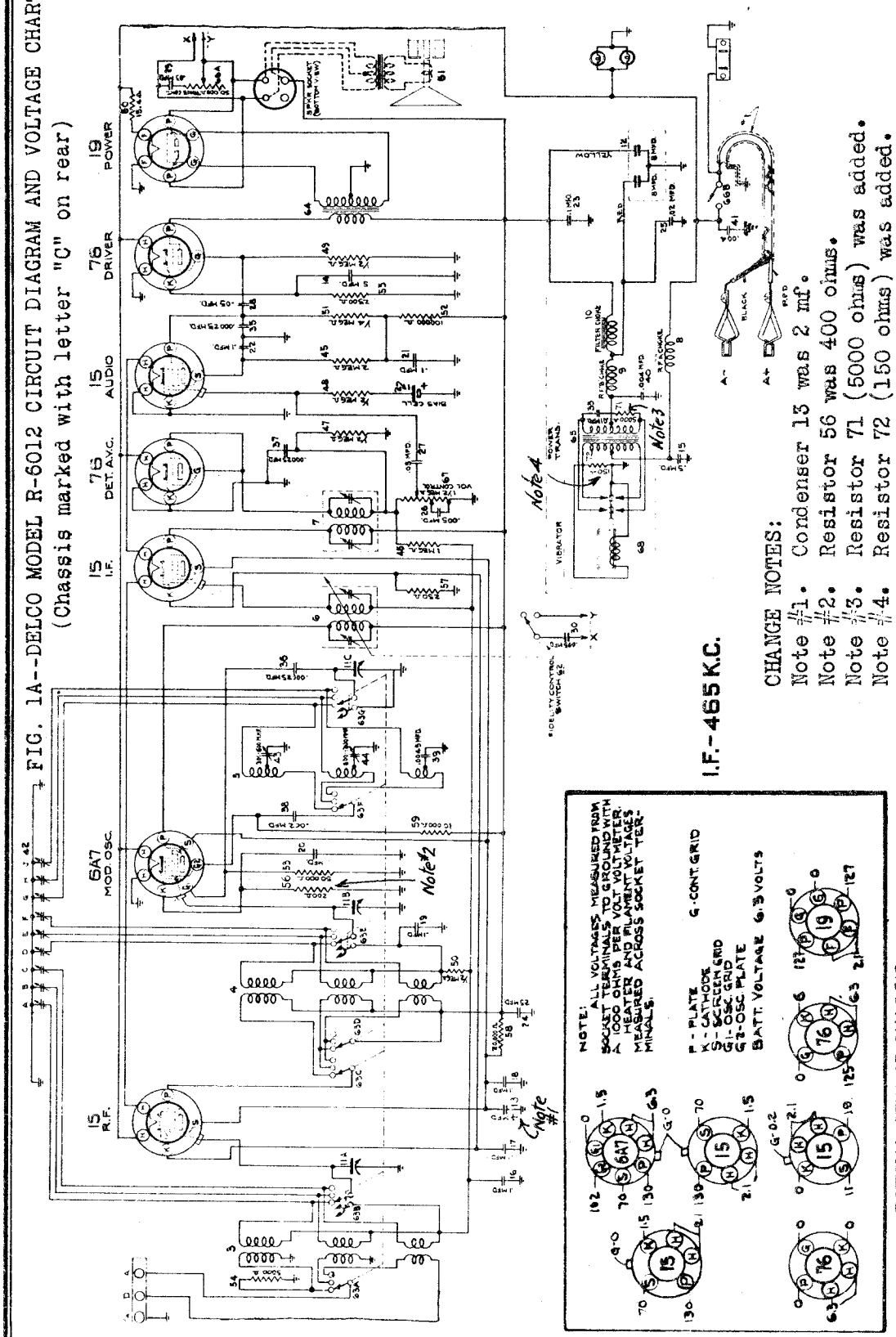

CHANGE NOTES:

Note #1. Condenser 13 was 2 mf.
Note #2. Resistor 56 was 400 ohms.
Note #3. Resistor 71 (5000 ohms) was added.
Note #4. Resistor 72 (150 ohms) was added.

In early models, a .005-mf. condenser was connected between each end of the vibrator transformer secondary and ground. Both these condensers were removed in later models.

In early models, a .01 mf condenser was connected across the secondary of the vibrator transformer. This was removed in later models.

The receivers in which these changes have been made can be identified by the letter "A" stamped on the rear of the chassis.

Delco Model R-6012

Date: 12-2-36

©John F. Rider, Publisher

MODEL R6012 Delco
Socket,Trimmers
Chassis,Notes

UNITED MOTORS SERVICE

The Delco Model R-6012 is a seven tube, three band, six volt battery operated superheterodyne receiver with A.V.C., tone control and a permanent magnet dynamic speaker. The tubes used are: 15 R-F Amplifier, 6A7 Oscillator-Modulator, 15 I-F Amplifier, 76 Detector--A.V.C. 15 1st Audio, 76 Driver and a type 19 Output tube.

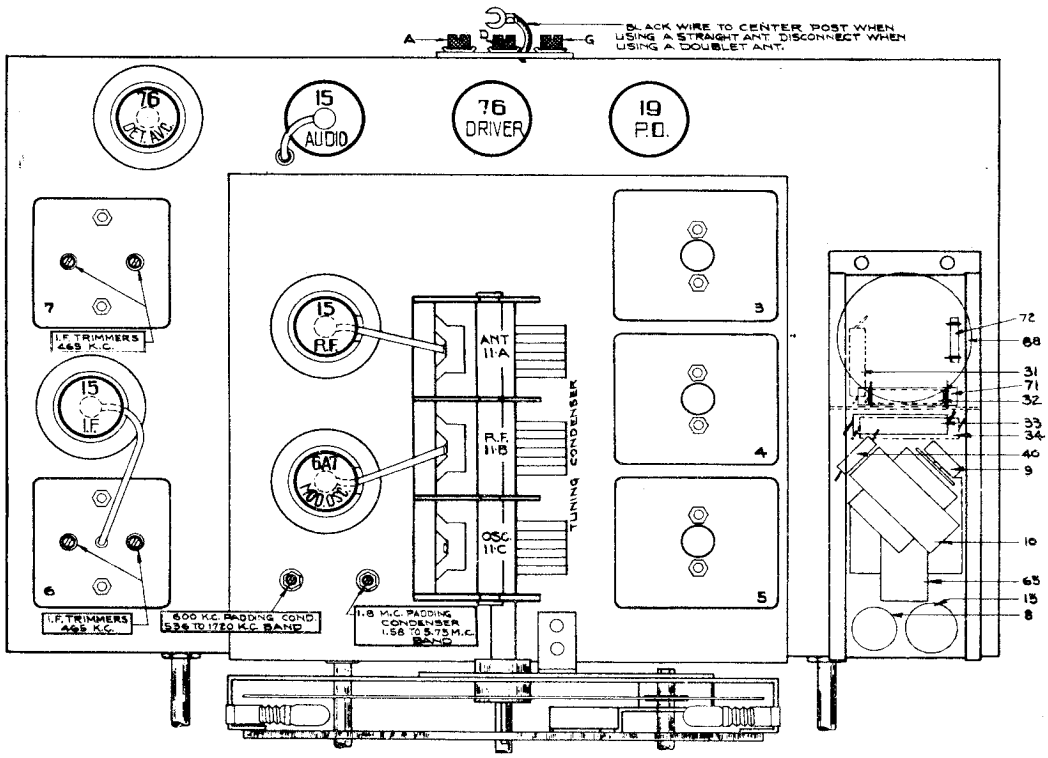

FIG. 2--PARTS LAYOUT--Top View

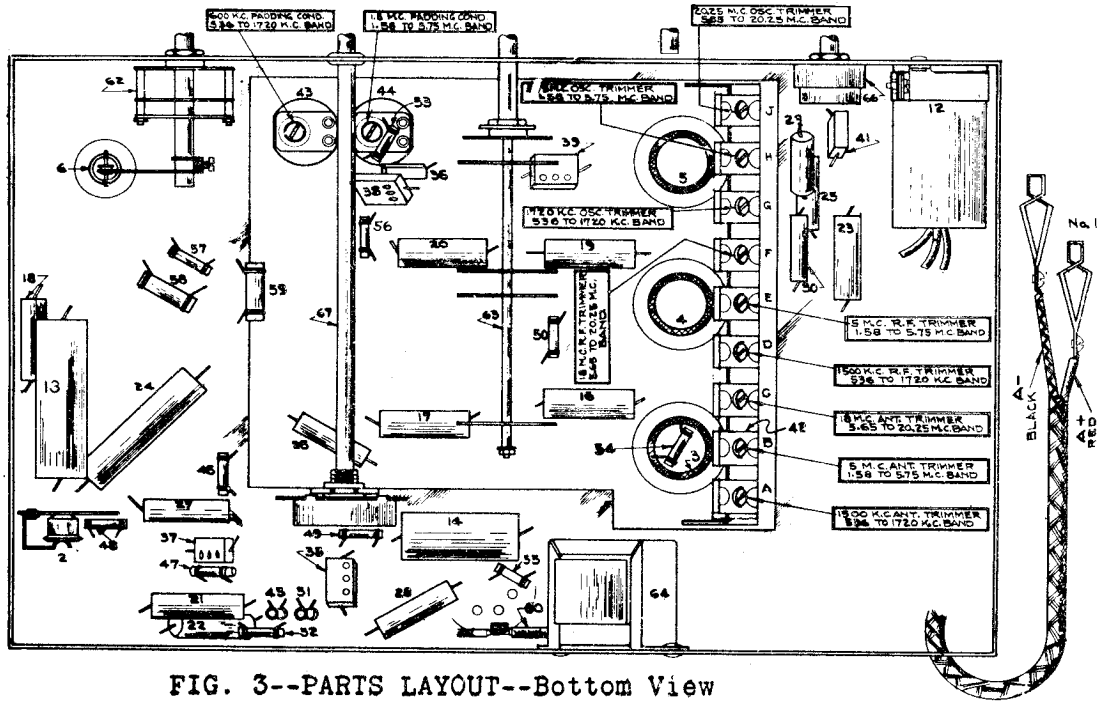

FIG. 3--PARTS LAYOUT--Bottom View

The frequency ranges on the bands covered are: American Broadcast Band (Yellow) 540 to 1720 kilocycles, Police & Amateur Band (Green) 1720 to 5800 kilocycles, and the Foreign Short Wave Band (Red) 5.8 to 20 megacycles.

Date: 9-23-36

This receiver is designed to be operated from a six volt storage battery.

©John F. Rider, Publisher

UNITED MOTORS SERVICE

MODEL R6012 Delco
Voltage, Alignment

CIRCUIT ALIGNMENT

All of the adjustable condensers are very accurately adjusted at the factory and should need no further adjustment unless tampered with or in the replacement of a defective coil. If realignment is found necessary the set can be properly adjusted only by using a calibrated test oscillator or signal generator, and an output meter.

TUBE SOCKET VOLTAGES (See Chart on Fig. 1)

Tube	Function	H ±	P ±	S ±	G1 ±	G2 ±	G ±	K ±
15	R-F Amp.	2.1	130	70	--	--	0	1.5
6A7	Osc.-Mod.	6.3	130	70	0	102	0	1.5
15	I-F Amp.	2.1	130	70	--	--	0	1.5
76	Det.-A.V.C.	6.3	0	--	--	--	0	0
15	1st Audio	2.1	19	11	--	--	-.2	0
76	Driver	6.3	125	--	--	--	0	6
19	Power	2.1	127	--	--	--	0	--

Readings taken from tube socket contacts to chassis ground (except filaments) with a 1000 ohm per volt D.C. meter.

Ampere drain--2.7 amps.

1. Peaking I-F Stages at 465 Kilocycles

(a) Connect the ground lead of the test oscillator to the chassis frame. Connect the other lead to the grid cap of the 6A7 tube through a .02 mfd. series condenser. DO NOT REMOVE THE GRID CLIP.

(b) Set test oscillator to exactly 465 kilocycles.

(c) Turn the volume control of the receiver on full.

(d) Peak each of the trimmers on the 2nd I-F coil, Illus. #7 on Fig. 2.

(e) Peak each of the trimmers on the 1st I-F coil, Illus. #6 on Fig. 2.

(f) In order to assure accurate settings of the I-F trimmers, the above adjustments should be repeated using the lowest test oscillator output that will give a reasonable output meter scale deflection.

2. Aligning R-F Circuits--"Foreign" Band (5.65-20.25 Megacycles)

(a) Remove the test oscillator lead from the grid of the 6A7 tube and connect it to the receiver antenna terminal through a 400 ohm resistor.

(b) Check to see that the tuning dial has not slipped on the condenser gang shaft by turning the rotor plates of the gang condenser until they are completely out of mesh, at which point the dial pointer should be at the high frequency end of the dial calibration.

(c) Set the test oscillator frequency and receiver dial to exactly 20.25 megacycles.

(d) Adjust the 20.25 megacycle oscillator, Illus. #42J on Fig. 3, to bring in the 20.25 megacycle test oscillator signal to maximum output. NOTE: When adjusting this trimmer, two peaks, the fundamental and the image peak will be noticed. CARE MUST BE TAKEN THAT THE FUNDAMENTAL PEAK AND NOT THE IMAGE PEAK IS USED FOR ALIGNING THE RECEIVER AT 20.25 MEGACYCLES. Always back off the trimmer to minimum capacity, then screw down the trimmer (add capacity) until the first peak which is the fundamental and the proper one to use is tuned in. If the trimmer is screwed down beyond the point where the first peak is received, the incorrect image peak will be tuned in. After completing adjustment of the oscillator trimmer at 20.25 megacycles, check to see if the proper peak has been used. To do this, leave the test oscillator frequency at 20.25 megacycles, increase the output of the test oscillator and tune the receiver dial to approximately 19.25 megacycles. Then vary the receiver dial slightly to the right and left of 19.25 megacycles, and if the fundamental peak was used in aligning at 20.25 megacycles, the test oscillator signal will be heard at approximately 19.25 megacycles on the receiver dial. If it is not possible to receive the signal, then the fundamental peak was not used and the 19.25 megacycle oscillator trimmer must be properly readjusted.

(f) Set the test oscillator frequency and the receiver dial to exactly 18 megacycles.

(g) Adjust 18 megacycle antenna and R-F trimmers, Illus. #42C & 42F on Fig. 3, for maximum output.

3. Aligning R-F Circuits--"Police-Amateur" Band (1.58-5.75 Megacycles)

(a) Set test oscillator frequency and receiver dial to exactly 5.25 megacycles.

(b) Adjust 5.75 megacycle oscillator trimmer, Illus. #42H on Fig. 3, to bring in 5.75 megacycle test oscillator signal to maximum output.

(c) Set test oscillator frequency and receiver dial to exactly 5 megacycles.

(d) Adjust 5 megacycle antenna R-F trimmers, Illus. #42B & 42E on Fig. 3, for maximum output.

4. Aligning R-F Circuits--"American" Broadcast Band (1720-536 Kilocycles)

(a) Set test oscillator frequency and receiver dial to exactly 1720 kilocycles. Replace 400 ohm series resistor with .00025 condenser

(b) Adjust 1720 kilocycle oscillator trimmer, Illus. #42G on Fig. 3, to bring in 1720 kilocycle test oscillator signal to maximum output

(c) Set test oscillator frequency and receiver dial to exactly 1500 kilocycles.

(d) Adjust 1500 kilocycle antenna and R-F trimmers, Illus. #42A and #42D on Fig. 3, for maximum output.

(e) Set receiver dial and test oscillator frequency to approximately 600 kilocycles, leaving the test oscillator connected to antenna and ground terminals of the receiver.

(f) Adjust 600 kilocycle oscillator padder condenser, Illus. #43 on Fig. 3, rocking tuning condenser back and forth for maximum 600 kilocycle signal response.

SERVICE HINT--Vibrator Hash

In cases where a slight amount of vibrator hash or interference is noticeable on the R-6012, the reversing of the red and yellow leads on the dual 8 mfd. electrolytic condenser (Illus. #12) will usually eliminate the trouble. A letter "B" is stamped on the rear of all R-6012 chassis in which this change has been made in receiver production.

Delco Model R-6012

Date: 9-23-36

©John F. Rider, Publisher

MODEL 983506 Pontiac
MODEL 983507 Pontiac
Socket,Trimmers
Chassis

UNITED MOTORS SERVICE

FOR OTHER DATA
SEE INDEX

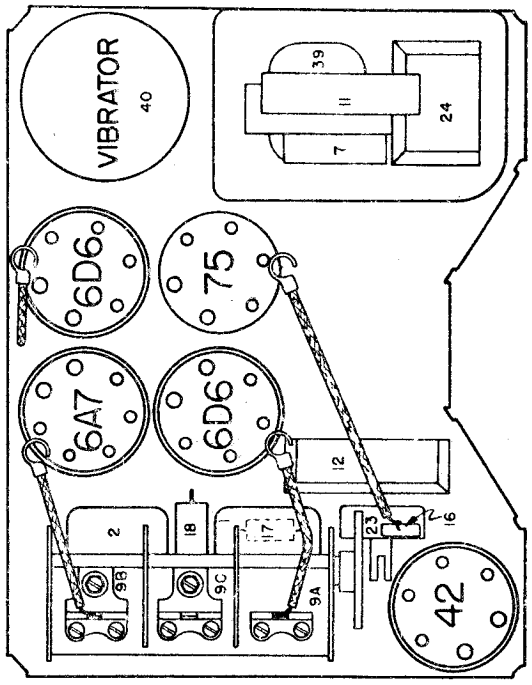

FIG. 2--PARTS LAYOUT--TOP VIEW

PONTIAC 983507 Date: 3-9-38

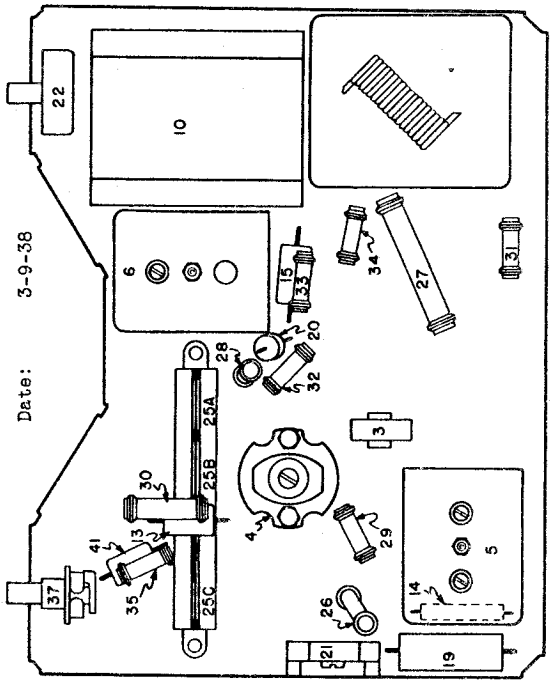

FIG 3--PARTS LAYOUT--BOTTOM VIEW

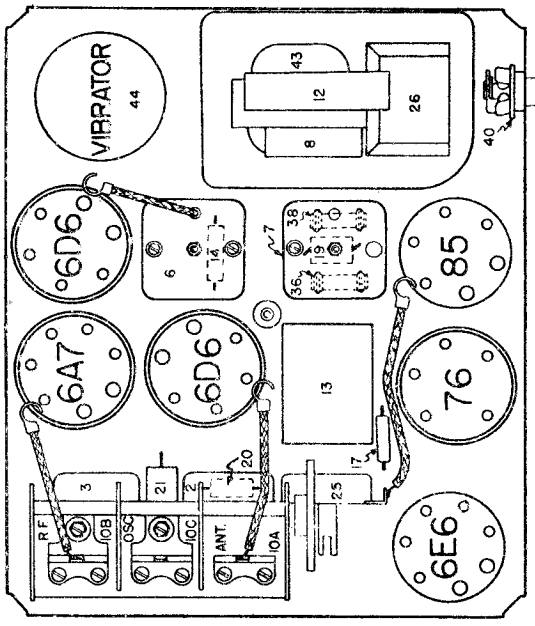

FIG. 2--PARTS LAYOUT--Top View

PONTIAC 983506 Date: 3-10-38

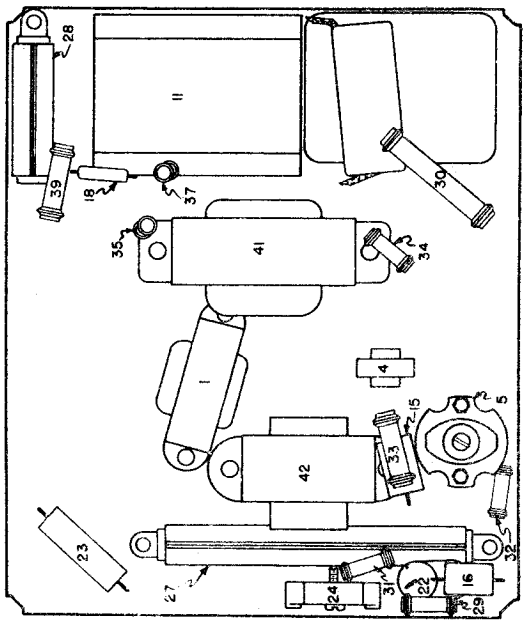

FIG. 3--PARTS LAYOUT--Bottom View

©John F. Rider, Publisher

UNITED MOTORS SERVICE

MODEL R6015 Delco
Schematic, Chassis
Notes

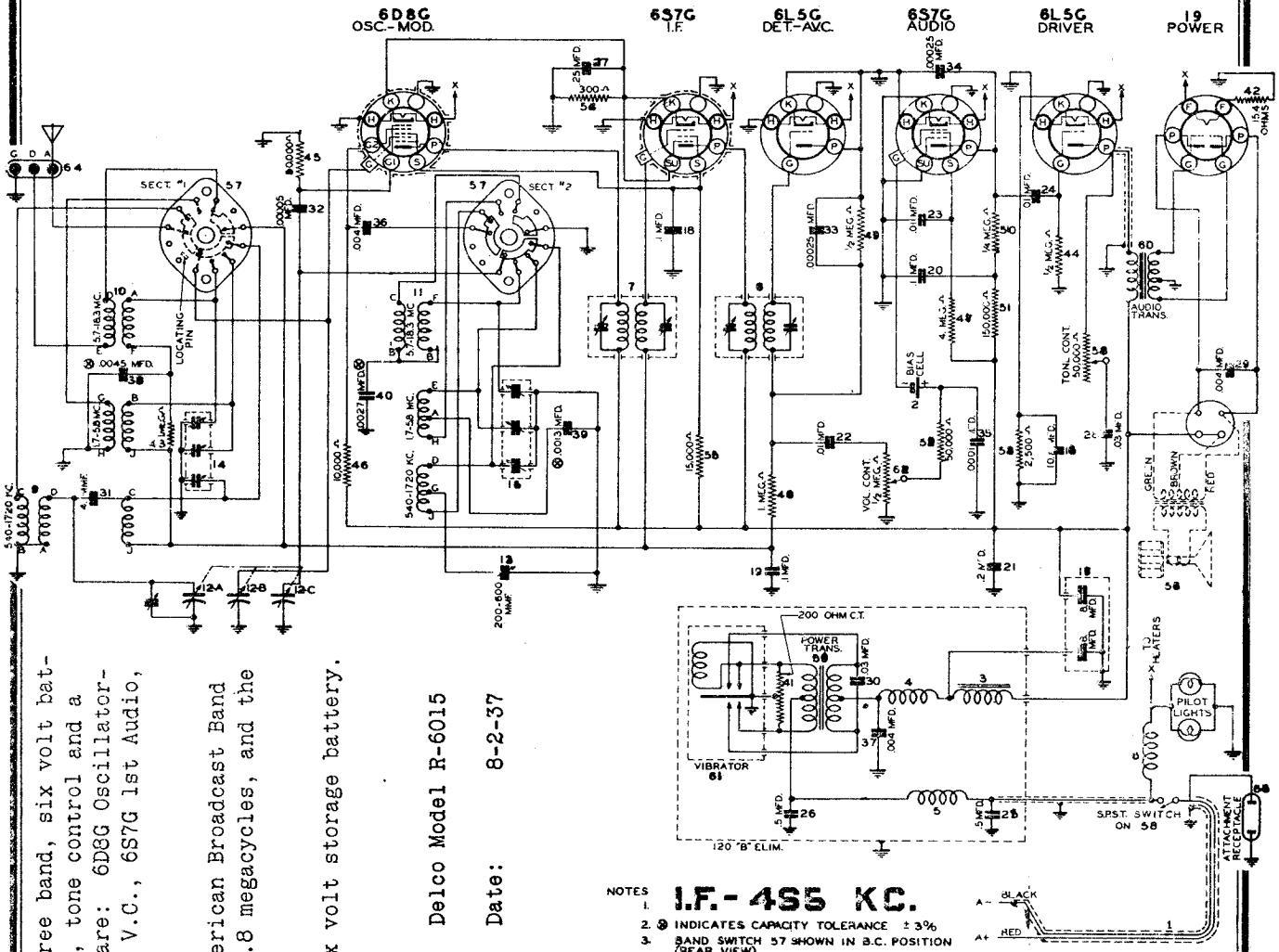

Delco Model R-6015

Date: 8-2-37

NOTES
1. I.F.-455 KC.
2. ⊛ INDICATES CAPACITY TOLERANCE ±3%
3. BAND SWITCH 57 SHOWN IN B.C. POSITION (REAR VIEW)

The Delco Model R-6015 is a six tube, three band, six volt battery operated superheterodyne receiver with A.V.C., tone control and a permanent magnet dynamic speaker. The tubes used are: 6D8G Oscillator-Modulator, 6S7G I-F Amplifier, 6L5G Detector and A.V.C., 6S7G 1st Audio, 6L5G Driver and a type 19 output tube.

The frequency ranges on the bands covered are: American Broadcast Band 540-1720 kilocycles, Police and Amateur band 1.7-5.8 megacycles, and the Foreign Short Wave band 5.7-18.3 megacycles.

This receiver is designed to be operated from a six volt storage battery.

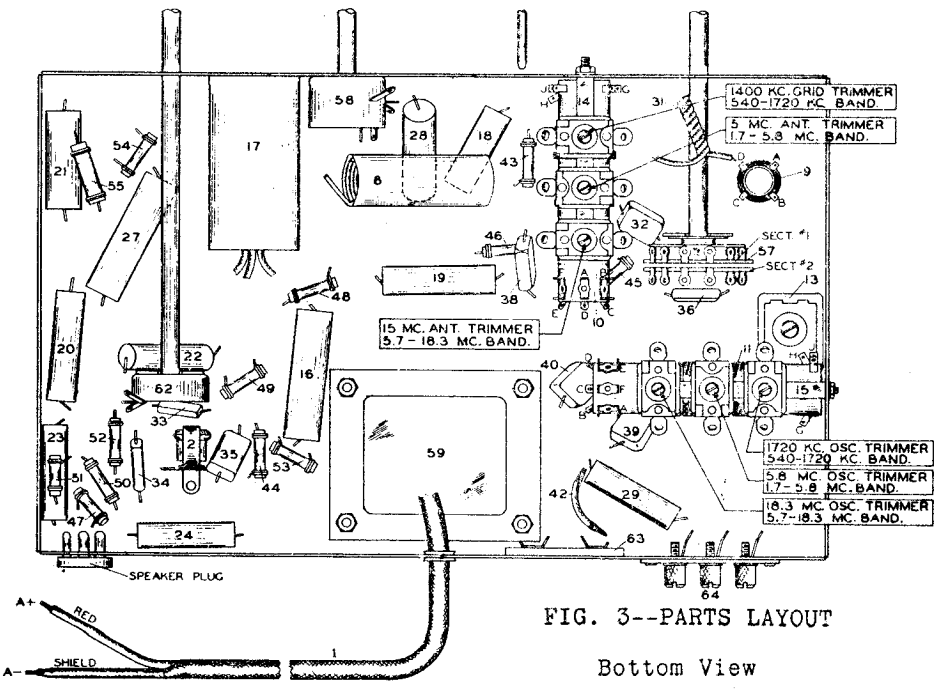

FIG. 3--PARTS LAYOUT

Bottom View

©John F. Rider, Publisher

MODEL R6015 Delco
Socket, Trimmers
Voltage, Alignment

UNITED MOTORS SERVICE

1. Peaking I-F Stages at 465 Kilocycles

(a) Connect the ground lead of the signal generator to the chassis frame. Connect the other lead to the grid cap of the 6DEG tube through a .02 mfd. series condenser. DO NOT REMOVE THE GRID CLIP.

(b) Set the signal generator to exactly 465 kilocycles.

(c) Turn the volume control of the receiver on full.

(d) Peak each of the trimmers on the 2nd I-F coil, Illus. #8 (Fig. 2).

(e) Peak each of the trimmers on the 1st I-F coil, Illus. #7 (Fig. 2).

(f) In order to assure accurate settings of the I-F trimmers the above adjustments should be repeated using the lowest signal generator output that will give a reasonable output meter scale deflection.

2. Aligning R-F Circuits--Foreign Band 5.7-18.3 Megacycles

(a) Remove the signal generator lead from the grid of the 6D8G tube and connect it to the receiver antenna terminal through a 400 ohm carbon resistor.

(b) Check to see that the tuning dial has not slipped on the condenser gang shaft by turning the rotor plates of the gang condenser until they are completely in mesh, at which point the dial pointer should be at the low frequency end of the dial calibration.

(c) Set the signal generator frequency and receiver dial to exactly 18.3 megacycles.

(d) Adjust the 18.3 megacycle oscillator trimmer, Illus. #11 (Fig. 3) to bring in the 18.3 megacycle signal with maximum output. NOTE: When adjusting this trimmer two peaks, the fundamental and the image peak will be noticed. CARE MUST BE TAKEN THAT THE FUNDAMENTAL PEAK AND NOT THE IMAGE PEAK IS USED FOR ALIGNING THE RECEIVER AT 18.3 MEGACYCLES. Always back off the trimmer to minimum capacity, then screw down the trimmer (add capacity) until the first peak which is the fundamental and the proper one to use is tuned in. If the trimmer is screwed down beyond the point where the first peak is received, the incorrect image peak will be tuned in. After completing adjustment of the oscillator trimmer at 18.3 megacycles always check to see if the proper peak has been used. To do this leave signal generator frequency at 18.3 megacycles, increase the output of the signal generator and tune the receiver dial to approximately 17.3 megacycles. Then vary the receiver dial slightly to the right and left of 17.3 megacycles, and if the fundamental peak was used in aligning at 18.3 megacycles the test signal will be heard at approximately 17.3 megacycles on the receiver dial. If it is not possible to receive the signal, then the fundamental peak was not used and the 18.3 megacycle oscillator trimmer must be properly readjusted.

(e) Set the signal generator frequency and the receiver dial to exactly 15 megacycles.

(f) Ajust 15 megacycle antenna trimmer, Illus. #10 (Fig. 3) to maximum output.

3. Aligning R-F Circuits--Police-Amateur Band (1.7-5.8 Megacycles)

(a) Set signal generator frequency and receiver dial to exactly 5.8 megacycles.

(b) Adjust 5.8 megacycle oscillator trimmer, Illus. #11 (Fig. 3) to bring in 5.8 megacycle signal generator signal with maximum output.

(c) Set signal generator frequency and receiver dial to exactly 5 megacycles.

(d) Adjust 5 megacycle antenna trimmer, Illus. #10 (Fig. 3) for maximum output.

4. Aligning R-F Circuits--American Broadcast Band 1720-540 Kilocycles

(a) Replace 400 ohm series resistor with a .00025 mfd. condenser.

(b) Set signal generator frequency and receiver dial to exactly 1720 kilocycles.

(c) Adjust 1720 kilocycle oscillator trimmer, Illus. #11 (Fig. 3) to bring in 1720 kilocycle signal generator signal to maximum output.

(d) Set signal generator frequency and receiver dial to exactly 1400 kilocycles.

(e) Adjust 1400 kilocycle antenna trimmer, Illus. #12A (Fig. 2), for maximum output.

(f) Adjust 1400 kilocycle preselector trimmer, Illus. #10 (Fig. 3), for maximum output.

(g) Set receiver dial and signal generator frequency to approximately 600 kilocycles, leaving the signal generator connected to antenna and ground terminals of the receiver.

(h) Adjust 600 kilocycle oscillator padder condenser, Illus. #13 (Fig. 3), while rocking tuning condenser back and forth for maximum 600 kilocycle signal response.

FIG. 2--PARTS LAYOUT--Top View

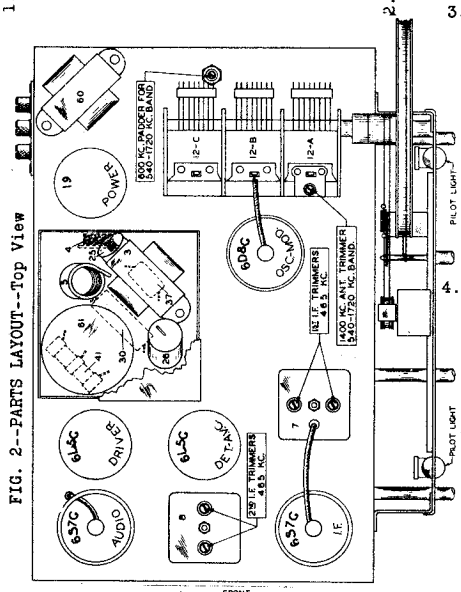

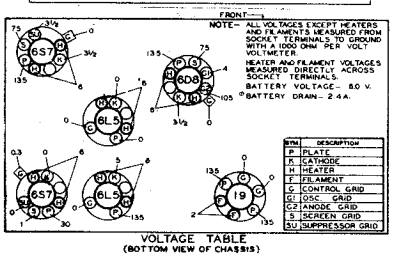

VOLTAGE TABLE
(BOTTOM VIEW OF CHASSIS)

Delco Model R-6015

Date: 8-2-37

©John F. Rider, Publisher

©John F. Rider, Publisher

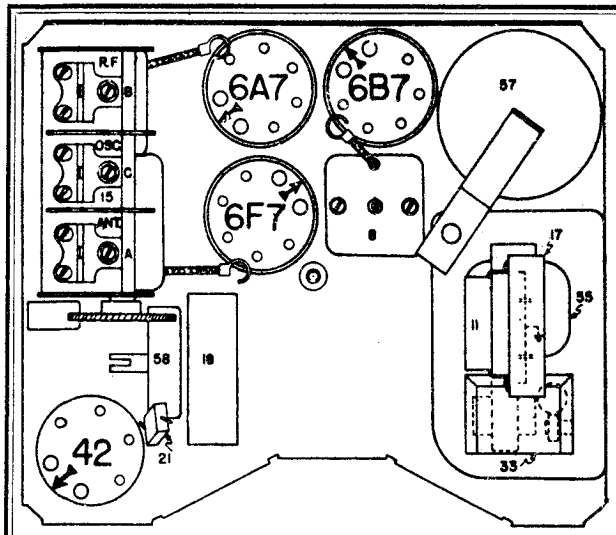

FIG. 2 PARTS LAYOUT--Top View
(BELOW Serial No. 0383500)

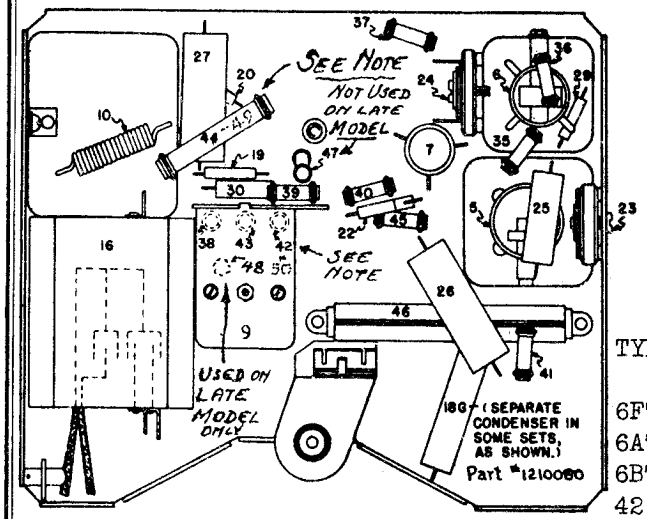

FIG. 3 PARTS LAYOUT--Bottom View
(BELOW Serial No. 0383500)

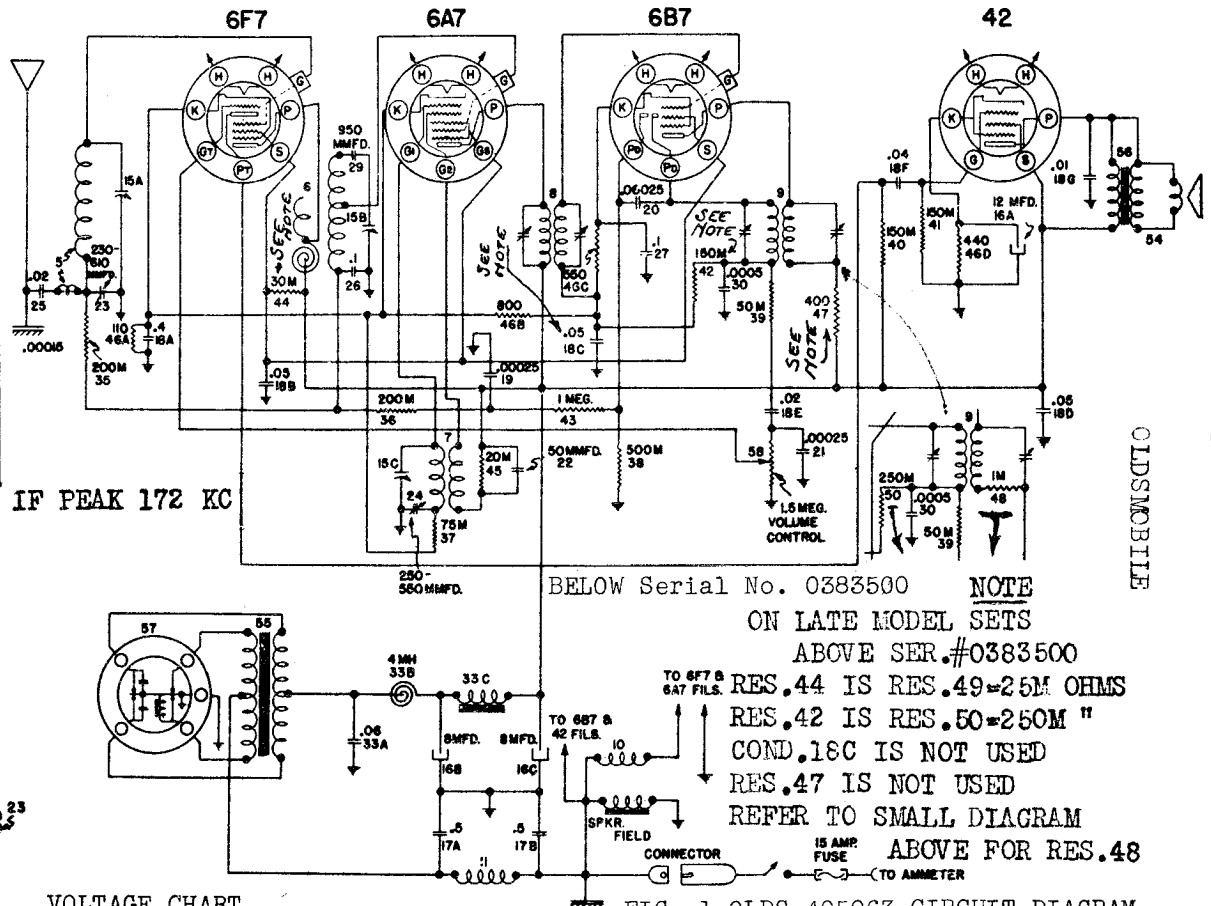

NOTE
ON LATE MODEL SETS
ABOVE SER.#0383500
RES.44 IS RES.49=25M OHMS
RES.42 IS RES.50=250M "
COND.18C IS NOT USED
RES.47 IS NOT USED
REFER TO SMALL DIAGRAM
ABOVE FOR RES.48

FIG. 1 OLDS 405063 CIRCUIT DIAGRAM

VOLTAGE CHART

TYPE	FUNCTION	H	P	PT	S	G1	G2	GS	GT	K
6F7	R.F. 1st Aud.	6	225	60	*90	-	-	-	0	2.1
6A7	Det. Osc.	6	225	--	-	0	150	90	-	2.1
6B7	I.F. 2nd Det. A.V.C.	6	225	--	*90	-	-	-	-	8.0
42	Output	6	215	--	225	-	-	-	-	15.0

*98 volts on sets above Serial No. 0383500.

Ampere drain of set at 6 volts is 5.8 amperes. Milliampere drain from "B" supply is approximately 55 M.A.

The audio output of the detector circuit is coupled to the triode portion of the 6F7 tube for audio frequency amplification. The pentode section of this same tube is used as a radio frequency amplifier.

All readings were taken to the chassis frame with a 1000 ohm per volt meter.

Date: 11-1-36

1. Peaking I-F Stages at 465 Kilocycles

(a) Connect the ground lead of the signal generator to the chassis frame. Connect the other lead to the grid cap of the 6A7 tube through a .1 mfd. series condenser. DO NOT REMOVE THE GRID CLIP.

(b) Set the signal generator to exactly 465 kilocycles.

(c) Turn the volume control of the receiver on full.

(d) Peak each of the trimmers on the 2nd I-F coil, Illus. #6A and 6B (Fig. 2).

(e) Peak each of the trimmers on the 1st I-F coil, Illus. #5A and 5B (Fig. 2).

(f) In order to assure accurate settings on the I-F trimmers the above adjustments should be repeated using the lowest signal generator output that will give a reasonable output meter scale deflection.

2. Aligning Circuits--Foreign Band 7.15-18.5 Megacycles

(a) Remove the signal generator lead from the grid of the 6A7 tube and connect it to the receiver antenna terminal through a 400 ohm carbon resistor.

(b) Check to see that the tuning dial has not slipped on the condenser gang shaft by turning the rotor plates of the gang condenser until they are completely in mesh, at which point the dial pointer should point to the last line at the low frequency end of the dial calibration.

(c) Turn band selector switch for operation on 18.5-7.15 megacycle band and set signal generator frequency and receiver dial to exactly 18.5 megacycles.

(d) Adjust the 18.5 megacycle oscillator trimmer, Illus. #12A (Fig. 3) for maximum 18.5 megacycle signal generator signal output. NOTE: When adjusting this trimmer two peaks may be noticed, in which case CARE MUST BE TAKEN THAT THE PROPER PEAK IS USED FOR ALIGNING THE RECEIVER AT 18.5 MEGACYCLES. Always back off the trimmer to minimum capacity, then screw down the trimmer (add capacity) until the second peak which is the proper one to use is tuned in.

(e) Set the signal generator frequency and the receiver dial to exactly 15 megacycles.

(f) Adjust 5 megacycle antenna trimmer, Illus. #10A (Fig. 3) for maximum output.

(g) Adjust 15 megacycle R-F trimmer, Illus. #11A (Fig. 3) for maximum output.

3. Aligning Circuits--Police-Amateur Band 2230-7500 Kilocycles

(a) Turn band selector switch for operation on 2230-7500 kilocycle band, set signal generator frequency and receiver dial to exactly 7.5 megacycles.

(b) Adjust 7.5 megacycle oscillator trimmer, Illus. #12B (Fig. 3) for maximum 7.5 megacycle signal output.

(c) Set signal generator frequency and receiver dial to exactly 6 megacycles.

(d) Adjust 6 megacycle antenna trimmer, Illus. #10B (Fig. 3) for maximum sensitivity.

(e) Adjust 6 megacycle R-F trimmer, Illus. #11B (Fig. 3) for maximum sensitivity.

(f) Set signal generator and receiver dial to approximately 2.5 megacycles--then while rocking gang condenser back and forth adjust 2.5 megacycle oscillator padder condenser, Illus. #9 (Fig. 2) for maximum sensitivity.

4. Aligning Circuits--American Broadcast Band 1720-540 K.C. Band

(a) Turn band selector for operation on 1720 to 540 kilocycle band, set signal generator frequency and receiver dial to exactly 1702 kilocycles. Replace 400 ohm series resistor in signal lead connected to antenna terminal with a .00025 mfd. condenser.

(b) Adjust 1720 kilocycle oscillator trimmer, Illus. #12C (Fig. 3) for maximum 1720 kilocycle signal generator signal output.

(c) Set signal generator frequency and receiver dial to exactly 1400 kilocycles.

(d) Adjust 1400 kilocycle antenna and R-F trimmers, Illus. #10C and 11C (Fig. 3) for maximum output.

(e) Set receiver dial and test oscillator frequency to approximately 600 kilocycles.

(f) Adjust 600 kilocycle oscillator padder condenser, Illus. #8 (Fig. 2) while rocking tuning condenser back and forth for maximum 600 kilocycle signal response.

All of the adjustable condensers are very accurately adjusted at the factory and should need no further adjustment unless tampered with in the field or a defective coil has been replaced. If realignment is found necessary, the set can be properly adjusted only by using a calibrated test signal oscillator or signal generator and an output meter.

©John F. Rider, Publisher

Schematic, Socket, Chassis Trimmers, Voltage

UNITED MOTORS SERVICE

MODELS 544290, 544291
Serials with prefix "A"

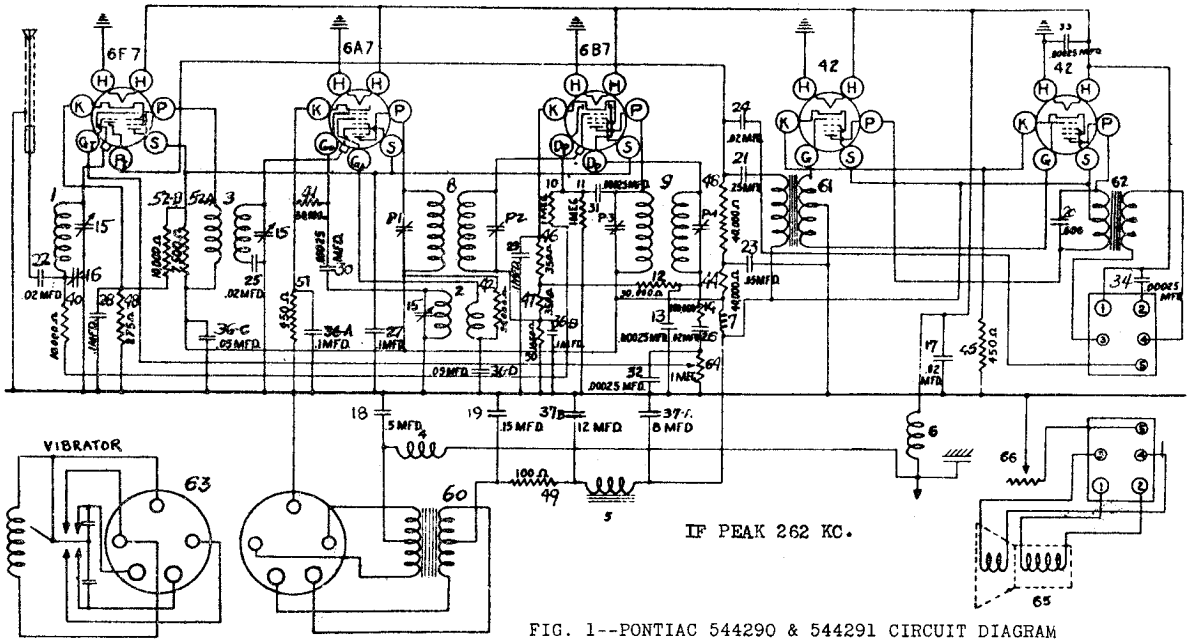

FIG. 1--PONTIAC 544290 & 544291 CIRCUIT DIAGRAM
With Serial No. Prefix "A".

Date: 2-25-38

TUBE SOCKET VOLTAGES

Type	Function	H	P	S	Pt	Gt	Ga	Go	K
6F7	R-F-1st A-F	6	230	110	110	0	-	-	7.0
6A7	Det.-Osc.	6	230	110	-	-	140	-	5.0
6B7	I-F Det.-AVC	6	230	100	-	-	-	-	13.0
42	Output	6	225	230	-	-	-	-	18.0
42	Output	6	225	230	-	-	-	-	18.0

Note: Data for Models 544290 and 544291, having serial numbers with the prefix "A" is given on this page.

For data for Models 544290 and 544291, having serial numbers with the prefix "O", see index for Model 405057 Olds, etc

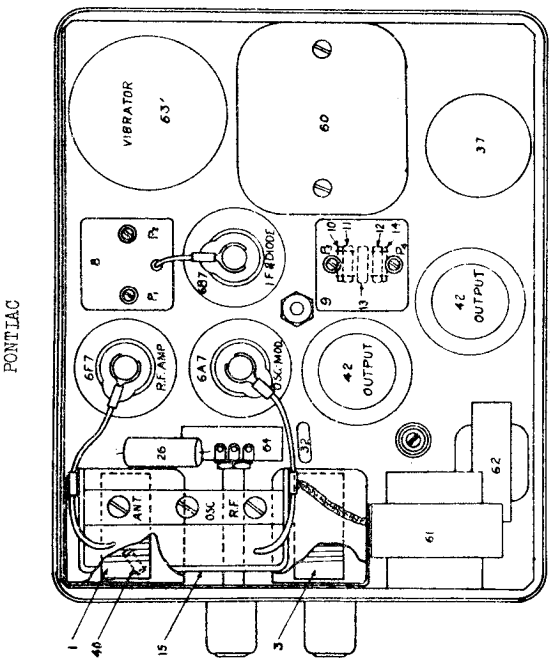

FIGURE 2--PARTS LAYOUT--Top View

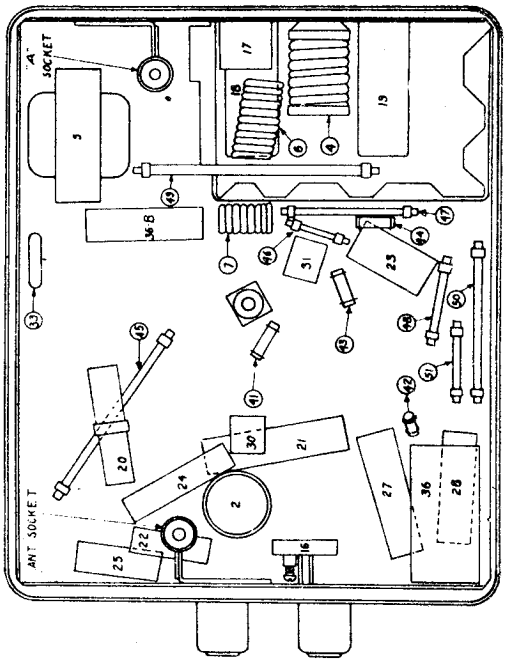

FIGURE 3--PARTS LAYOUT--Bottom View

©John F. Rider, Publisher

MODELS 544290,544291
Serials with prefix "A" UNITED MOTORS SERVICE
Alignment,Parts,Data

CIRCUIT ALIGNMENT

If realignment is found necessary, the circuits can be adjusted only with the chassis in its case, using a calibrated test oscillator or signal generator and an output meter.

1. Aligning I-F Stages at 262 Kilocycles

(a) Connect the signal lead of the signal generator to the grid cap of the 6A7 tube through a .5 mfd. condenser, leaving the tube's grid clip in place.

(b) Connect the ground lead of the signal generator to the chassis frame.

(c) Connect the output meter to the plate prongs of the 42 type tubes.

(d) Set the signal generator to 262 kilocycles.

(e) Adjust the 2nd I-F trimmers (Illus. 9, Fig. 2) and then the 1st I-F trimmers (Illus. 8, Fig. 2) for maximum output. This operation should be repeated until no further increase in output is obtained.

2. Aligning at 1530 Kilocycles

(a) Disconnect the signal lead of the signal generator from the grid of the 6A7 tube and connect to the antenna terminal of the receiver.

(b) Turn the rotor plates of the gang condenser completely out of mesh and against the high frequency stop.

(c) Set the signal generator to 1530 kilocycles.

(d) Adjust the trimmer for the oscillator section of the gang condenser (middle section) CAREFULLY for maximum output. Then adjust the trimmer for the"R-F" and "ANT" sections of the gang condenser also for maximum output.

3. Aligning at 1400 Kilocycles

(a) Set the signal generator to 1400 kilocycles.

(b) Turn the condenser rotor plates until this signal is tuned in with maximum output.

(c) Readjust only the parallel trimmers for the "R-F" and ANT. sections of the gang condenser (Fig. 2) for maximum output.

4. Aligning at 600 Kilocycles

(a) Set the signal generator to 600 kilocycles.

(b) Turn the condenser rotor plates until this signal is tuned in with maximum output.

(c) Adjust the antenna compensating condenser (Illus. 16, Fig. 3) for maximum output.

(d) Retune the condenser plates for maximum output.

Repeat these operations alternately until no further improvement in output can be noted.

5. Realigning at 1400 Kilocycles

(a) Set the signal generator again to 1400 kilocycles.

(b) Turn the condenser rotor plates until this signal is tuned in with maximum output.

(c) Readjust the trimmer for the "ANT" section of the gang condenser CAREFULLY for maximum output.

6. Adjusting Receiver to Car Antenna

(a) Tune the receiver to a weak broadcast station on the low frequency end of the dial, 550 to 700 K.C.

(b) Adjust the antenna compensating condenser (Illus. 16, Fig. 3) for maximum response from the broadcast station.

REPLACEMENT PARTS

CHASSIS ELECTRICAL PARTS

Illus. No.	Part No.	Part Name	Description
1	1209343	Coil	Antenna
2	1209345	Coil	Oscillator
3	1209344	Coil	R-F
4	1209895	Coil	Vibrator "A" choke
5	1209291	Coil	"B" filter choke (audio)
7	1210079	Coil	"B" filter choke (R-F)
8	1209326	Coil assy.	1st I-F
9	1209287	Coil assy.	2nd I-F
10-11	1209885	Resistor	Insulated 1 megohm 1/2 watt
12	1209884	Resistor	Insulated 300,000 ohms 1/2 watt
13	1209796	Condenser	Molded .00025 mfd.
14	1209883	Resistor	Insulated 100,000 ohms 1/2 watt
15	1209346	Condenser	3 gang tuning
16	1209633	Condenser	Ant. compensating
17	1212099	Condenser	Tubular .02 mfd. 600 V.
18	1209299	Condenser	Metal case .5 mfd. 160 V.
19	1209300	Condenser	Metal case .15 mfd. 400 V.
20	7230593	Condenser	Tubular .006 mfd. 800 V.
21	7231594	Condenser	Tubular .25 mfd. 400 V.
22	1209310	Condenser	Tubular .02 mfd. 200 V.
23	1209308	Condenser	Tubular .05 mfd. 400 V.
24	1212099	Condenser	Tubular .02 mfd. 600 V.
25-26	1209307	Condenser	Tubular .02 mfd. 200 V.
27-28-29	1207908	Condenser	Tubular .1 mfd. 400 V.
30-31-32	1209796	Condenser	Molded .00025 mfd.
33-34	1209796	Condenser	Molded .00025 mfd.
36	1209289	Condenser	By-pass block
		Sec. A	.1 mfd. 200 V.
		Sec. B	.1 mfd. 200 V.
		Sec. C	.05 mfd. 400 V.
		Sec. D	.05 mfd. 400 V.
37	1209819	Condenser	Electrolytic block
		Sec. A	8 mfd. 350 V.
		Sec. B	12 mfd. 350 V.
40	1209883	Resistor	Insulated 100,000 ohms 1/2 watt
41	1208320	Resistor	Insulated 60,000 ohms 1/2 watt
42	1209405	Resistor	Insulated 20,000 ohms 1/2 watt
43-44	1208296	Resistor	Insulated 40,000 ohms 1/2 watt
45	1210078	Resistor	Flex. 450 ohms 3 watts
46-47	1208802	Resistor	Flex. 350 ohms 1/2 watt
48	1208125	Resistor	Flex. 275 ohms 1/2 watt
49	1209359	Resistor	Flex. 100 ohms 3 watts
50	1208956	Resistor	Flex. 1650 ohms 1/2 watt
51	1208110	Resistor	Flex. 450 ohms 1/2 watt
52	1209795	Resistor	Voltage divider
		Sec. A	7500 ohms
		Sec. B	10,000 ohms
60	1209282	Transformer	Power
61	1209815	Transformer	Input
62	1209293	Transformer	Input
63	5039661	Vibrator	Synchronous
64	1209296	Control	Volume--1 megohm

Pontiac 544290-1

Date: 2-25-38

Note: Data for Models 544290 and 544291, having serial numbers with the prefix "A" is given on this page.

For data for Models 544290 and 544291, having serial numbers with the prefix "O" see index for Model 405057 Olds, etc.

The Model 544290 is equipped with a"header" speaker while the Model 544291 makes use of the "dash" speaker.

HEADER SPEAKER PARTS

1210149	Speaker assy.	Complete
601745	Cable assy.	Speaker--5 prong
1209841	Cloth assy.	Grille--incl. ring
1209169	Plug	Speaker plug
1209840	Screen	Speaker grille (metal)
1209263	Speaker	Unit only
1209844	Spring	Tone control knob
1209628	Control	Tone 300,000 ohms

DASH SPEAKER PARTS

1210151	Speaker assy.	Complete
1209657	Cable	Speaker--5 prong
1209169	Plug	Speaker cable--5 prong
1210135	Speaker	8" dynamic

MISCELLANEOUS PARTS

1209334	Bolt	Cover stud
1209335	Bracket	Volume control
1209337	Case	Transformer
1209342	Clamp	Elect. cond. mtg.
1209350	Cover	Transformer bottom
1209351	Cover	Transformer top
1209352	Cover	Partition bottom
1209354	Plug	Ant. comp. cond. cover
1208806	Ring	Tube shield
1208282	Ring	Osc. coil retaining
1208275	Shield	Osc. coil
1208807	Shield	Tube (half)
1208808	Shield	Tube (half with slot)
1209658	Socket	Speaker connecting
1209065	Socket	Vibrator
1209735	Screw	Chassis bottom cover ret.
1209186	Screw	Chassis to case mtg.
1209185	Screw	Vib. shield plate mtg.
140881	Screw (set)	Headless cup point (#10-32 x 5/16")
1209744	Nut	Cover stud--bolt mtg.
115109	Washer	Cover stud--bolt mtg.

©John F. Rider, Publisher

UNITED MOTORS SERVICE

MODEL 600565
Chevrolet
Schematic

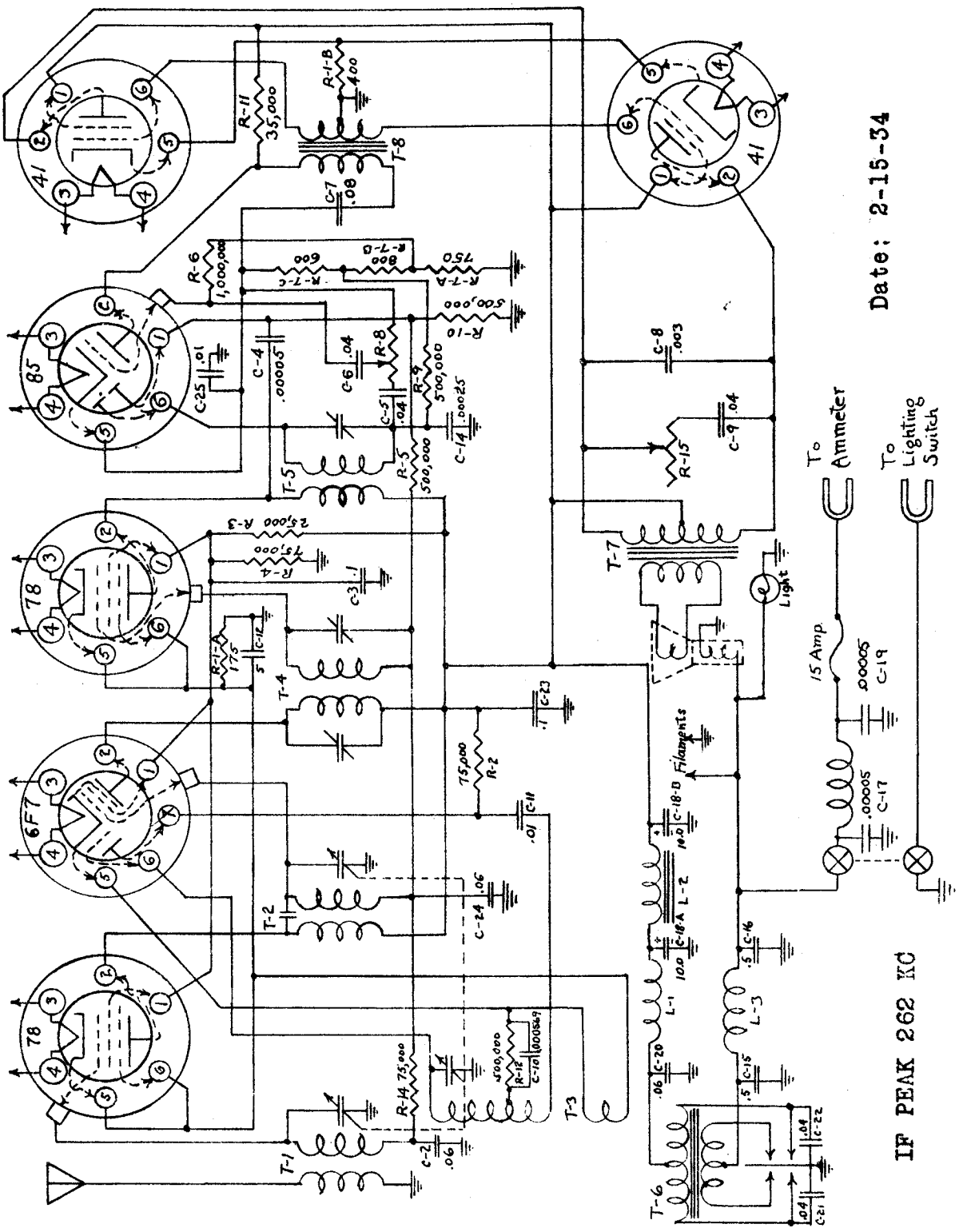

Date: 2-15-34

IF PEAK 262 KC

Fig. 2 CHEV. #600565 CIRCUIT DIAGRAM

©John F. Rider, Publisher

VOLTAGE CHART

Tube	#1 Screen	#2 Plate	#3 Fil.	#4 Fil.	#5 Cathode	#6 Cond.	#7 Triode Plate
78	85	210	6.0	0	3.2	3.2	
6F7	85	210	0	6.0	3.2	0	90
78	85	210	6.0	0	3.2	3.2	
85	0	85	0	6.0	8.0	0	
41	210	205	6.0	0	16	0	
41	210	205	6.0	0	16	0	

Peaking I.F. Stages at 262 K.C.

The only way the I.F. stages can be peaked properly is with the use of an oscillator and output meter. Connect the output meter to the plate prongs of the 41 output tubes Make sure that the output meter is protected with a series condenser internally; if not, connect a 1/10 mfd. condenser in series with one of the output meter leads. The Dayrad #875 Universal Test Meter and Series #51 Volt-Ohmeter have this protective condenser included in them.

(a) Connect the output of the oscillator to the grid cap of the 6F7 tube (leave grid cap in place) and to the chassis ground.

(b) Turn the condenser gang until the plates are entirely out of mesh.

(c) Set the oscillator on 262 K.C. and feed this signal through the I.F. stages of the set.

(d) Peak the I.F. trimmer which is on the I.F. coil having only one adjusting screw first. Then peak the two condensers of the 2nd I.F. coil.

(e) Set the oscillator output at the lowest level that will give a reasonable scale deflection on the output meter. This should be less than half the maximum output available.

(f) Make all trimmer adjustments for maximum deflection on the output meter scale.

Peaking Gang Condenser at 1400 K.C.

(a) Connect the output of the oscillator to the antenna connection of the set and to the chassis ground.

(b) In order that the position of the condenser plates for 1400 K.C. may be accurately determined, a wood calibration block (painted red, part number 1208073) should be used. This block may be used also in peaking all of the U.M.S., B-O-P, and Chevrolet radios that use the "tubeless rectifier."

(c) Insert the RED block under the middle section of the gang condenser, so that the largest flat side rests on the chassis base and the square notch stops solidly against the stationary plate support bracket.

(d) Open the condenser plates until they stop solidly against the beveled edge of the block as shown in Fig. 1.

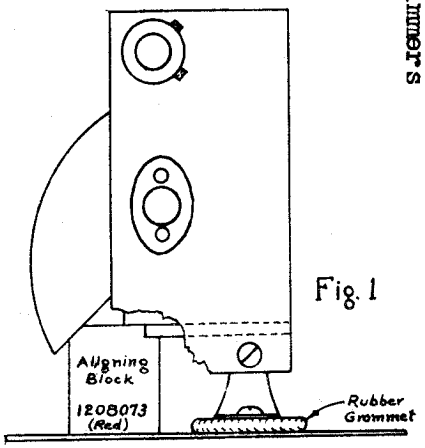

Fig. 1

(e) Peak the parallel trimmers on top of the condenser gang, the oscillator section first at 1400 K.C. for maximum deflection on the output meter.

(f) To insure sharp peaking of all trimmers reduce the oscillator output to the lowest level that will give a reasonable deflection on the output meter scale.

NOTE: Always use the red calibration block when aligning the parallel trimmers on the gang condenser. Do not rely on the logging of the dial to determine the 1400 K.C. setting. When the aligning procedure is completed the logging of the dial may be slightly off and should be re-set.

GENERAL: The model 600565 auto radio is a powerful, two unit type, six tube superheterodyne radio receiver with airplane dial.

VIBRATOR NOISE

Examination of the mechanical construction of the transformer vibrator assembly will show that the bottom plate of the vibrator case is riveted to the chassis. The transformer-vibrator assembly is fastened to the bottom plate with two Parker Kalon screws through each end of the lid. For complete elimination of vibrator noise it is necessary that the bottom plate of the vibrator assembly make a good contact with the vibrator case at all points. Placing screws on all four sides of the bottom plate would make the servicing of the vibrator rather difficult, consequently screws were placed in the ends only. The press fit of the bottom plate must be depended upon to eliminate the vibrator noise.

Do not change a vibrator that is noisy electrically before checking the grounding of the vibrator assembly to its bottom plate. Use a pair of pliers to bend the longest sides of the bottom plate inward just enough to insure a pressure contact with the vibrator assembly at all points.

©John F. Rider, Publisher

UNITED MOTORS SERVICE

MODEL 601177 Early
Chevrolet
Below Ser.1748809
Schematic, Voltage

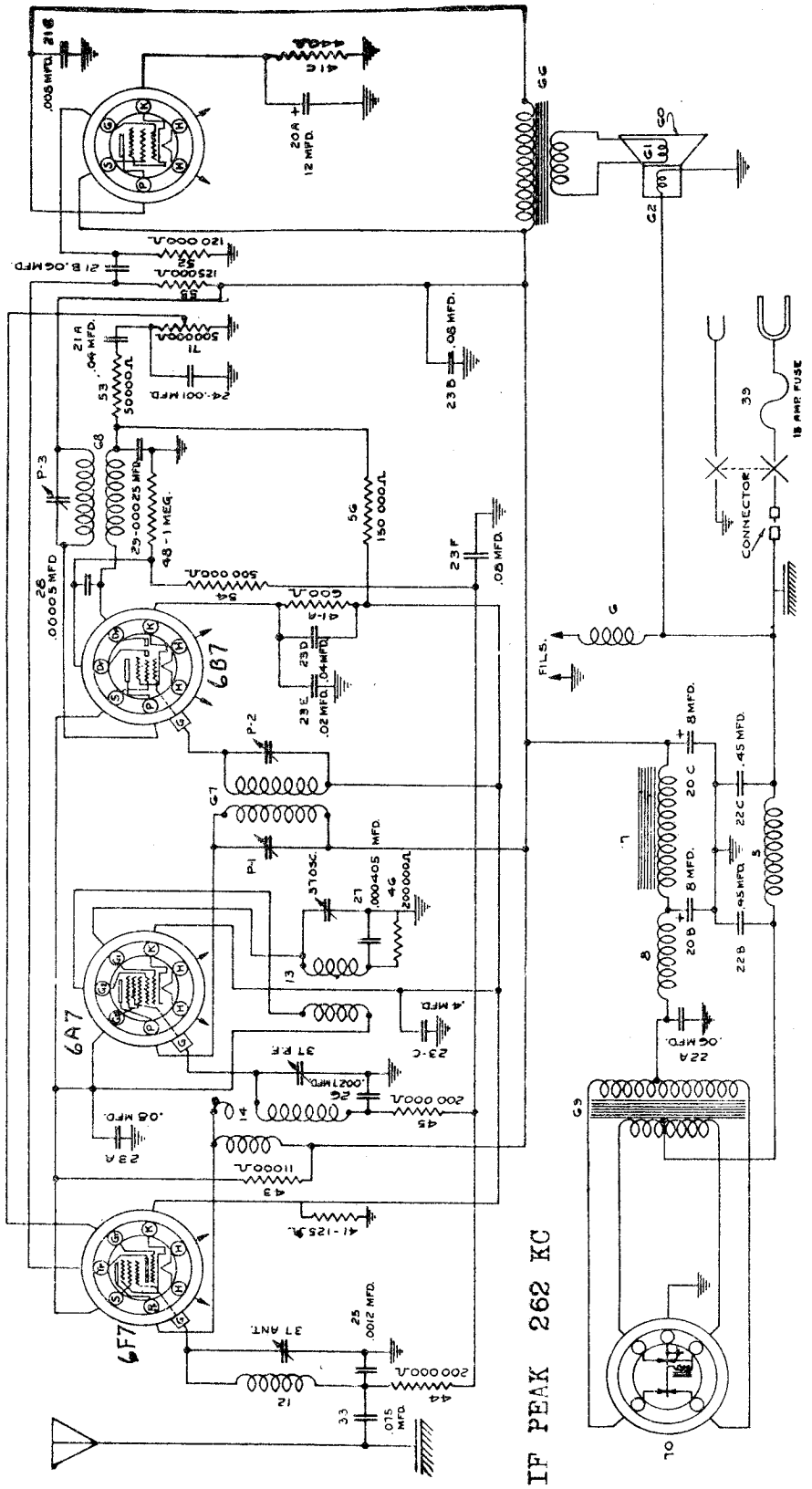

FIG. 1 CHEVROLET 601177 CIRCUIT DIAGRAM
(For Sets Below Serial #1748809 only)

VOLTAGE CHART

TYPE	FUNCTION	H	Pp	S	Tp	Gt	G	G1	G2	G3,5	K
6F7	R.F.	6	250	135	80	0	0	-	-	-	6.2
6A7	Det-Osc.	6	250	-	-	-	0	0	120	135	6.2
6B7	2nd Det-AVC	6	250	135	-	-	**0	-	-	-	8.5
42	Output	6	240	250	-	-	0	-	-	-	16.0

** 6.2 Volts for sets below serial No. 1748809

©John F. Rider, Publisher

MODEL 601177 Late
Chevrolet
Above Ser.1748809
Schematic, Voltage

UNITED MOTORS SERVICE

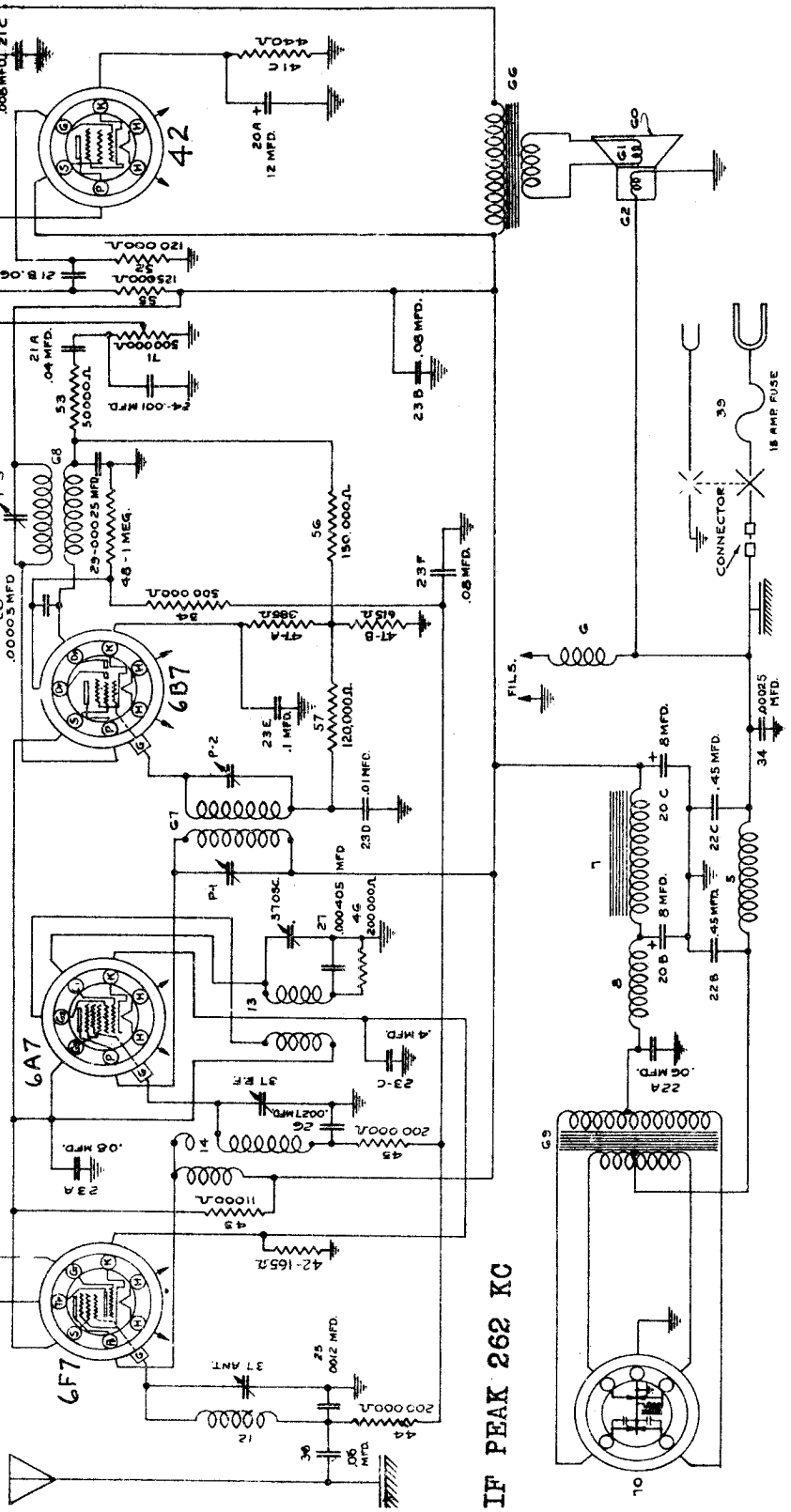

FIG. 1A CHEVROLET 601177 CIRCUIT DIAGRAM
(For Sets above Serial #1748809 only)

GENERAL: The Models 601177 is a four tube, single unit, superheterodyne auto radio. It is designed specifically for Chevrolet automobiles and equipped with a remote control and a plug-in vibrator of the full wave, self rectifying type.

VOLTAGE DATA OF LATE MODEL CHEVROLET 601177
SAME AS GIVEN FOR EARLY MODEL

©John F. Rider, Publisher

Socket, Trimmers, Chassis Changes

UNITED MOTORS SERVICE

MODEL 601177, Early, Late Chevrolet

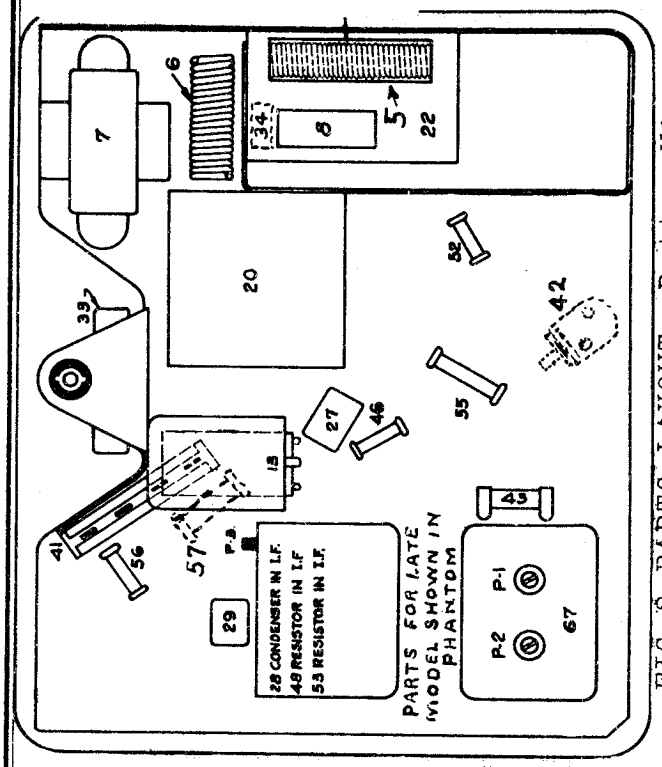

FIG. 2 PARTS LAYOUT--Bottom View

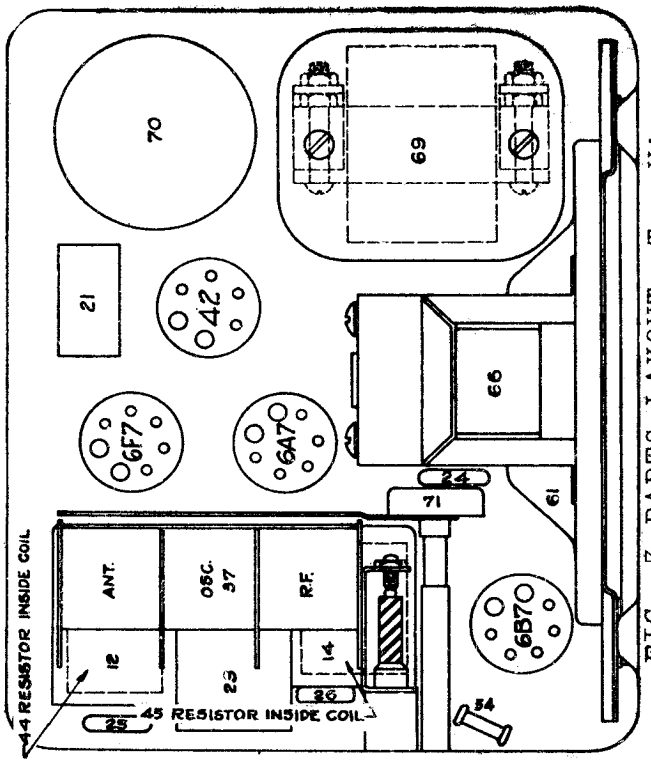

FIG. 3 PARTS LAYOUT--Top View

CIRCUIT CHANGES

Several changes were made in the receiver circuit starting at serial #1748809. It will be necessary to use Figures 1, 2 and 3 for receivers below serial #1748809 and to use Figures 1A, 2A and 3A for receivers above serial #1748809. **PARTS SHOWN IN PHANTOM.** It will be noted on some receivers that the .008 mfd. section (Illus. 21C) of the part #1209048 Condenser Block has its lead cut off close to the block and a .008 mfd. tubular condenser connected from the plate of the 42 tube in its place. This change was made because it was found necessary to change the voltage rating of the .008 mfd. section of the condenser block after production started and a .008 mfd. tubular condenser was simply used until a new block could be manufactured. The tubular condenser used is part #1209212 and is located alongside of the power filter choke. All of the service replacement stock of #1209048 condenser blocks have a .008 mfd. section of a higher voltage rating and in installing these blocks in a receiver where the tubular condenser was used it will be necessary to either remove the tubular condenser or clip the lead off of the .008 section of the block.

The capacity of two sections of the part #1209050 Condenser Block (Illus. 23A to F) were changed at serial #1748809 along with several other circuit changes. The "D" section which was originally .04 mfd. was changed to .01 mfd. and the "E" section which was originally .01 mfd. was changed to .1 mfd. All of the service replacement stock of the part #1209050 Condenser Blocks are of the new type incorporating the above changes and should be used in the service replacement of all part #1209050 condenser blocks used below serial #1748809.

©John F. Rider, Publisher

MODEL 601177,Early,Late
Chevrolet
Alignment

UNITED MOTORS SERVICE

Peaking I.F. Stages at 262 K.C.

(a) Connect the ground lead of the test oscillator to the chassis frame. Connect a 1 mfd. condenser in series with the other lead and connect this lead to the grid cap of the 6A7 tube, leaving the tube's grid clip in place. The 1 mfd. condenser is necessary to prevent the oscillator circuit of the receiver from affecting the I.F. adjustments.

(b) Set the test oscillator on 262 kilocycles.

(c) Turn the volume control of the receiver on full.

(d) Peak the I.F. trimmer P-3 for the 2nd I.F. coil shown on Figure 2.

(e) Then peak trimmers P-2 and P-1 of the first I.F. coil also shown on Figure 2.

(f) In order to insure accurate settings of the I.F. trimmers the above adjustments should be repeated using the lowest oscillator output that will give a reasonable output meter scale deflection. Make all adjustments for maximum output.

Peaking Gang Condenser at 1530 and 1400 K.C.

(a) Connect the output of the test oscillator to the antenna connection of the receiver and to the chassis ground. Do not use the 1 mfd. condenser that was required in aligning the I.F. stages.

(b) Turn the rotor plates of the gang condenser until they are COMPLETELY OUT OF MESH.

(c) Set the test oscillator on 1530 kilocycles.

(d) Adjust the oscillator section (middle section) of the gang condenser CAREFULLY for maximum output. Then adjust the trimmers for the "R.F." and "ANT" sections of the gang condenser.

(e) Set the test oscillator on 1400 kilocycles.

(f) Turn the condenser rotor plates until the 1400 K.C. signal from the test oscillator is tuned in with maximum output. (No calibration blocks should be used as the oscillator circuit is adjusted at 1530 K.C. on this set.)

(g) Readjust the parallel trimmers for the "R.F." and "ANT" sections of the gang condenser (shown on Fig. 2) for maximum output. DO NOT disturb the oscillator trimmer (middle section) as this is adjusted at 1530 K.C. only, and any further adjustments at this point will affect both the tuning range of the receiver and the tracking of its circuits.

CAUTION: Always use the lowest possible test oscillator output that will give a reasonable deflection of the output meter pointer, in order to prevent the A.V.C. from leveling out the output as the adjustments are made.

©John F. Rider, Publisher

UNITED MOTORS SERVICE

MODELS 980507,980508
Buick
Schematic, Voltage
Alignment
MODEL 980509
Alignment

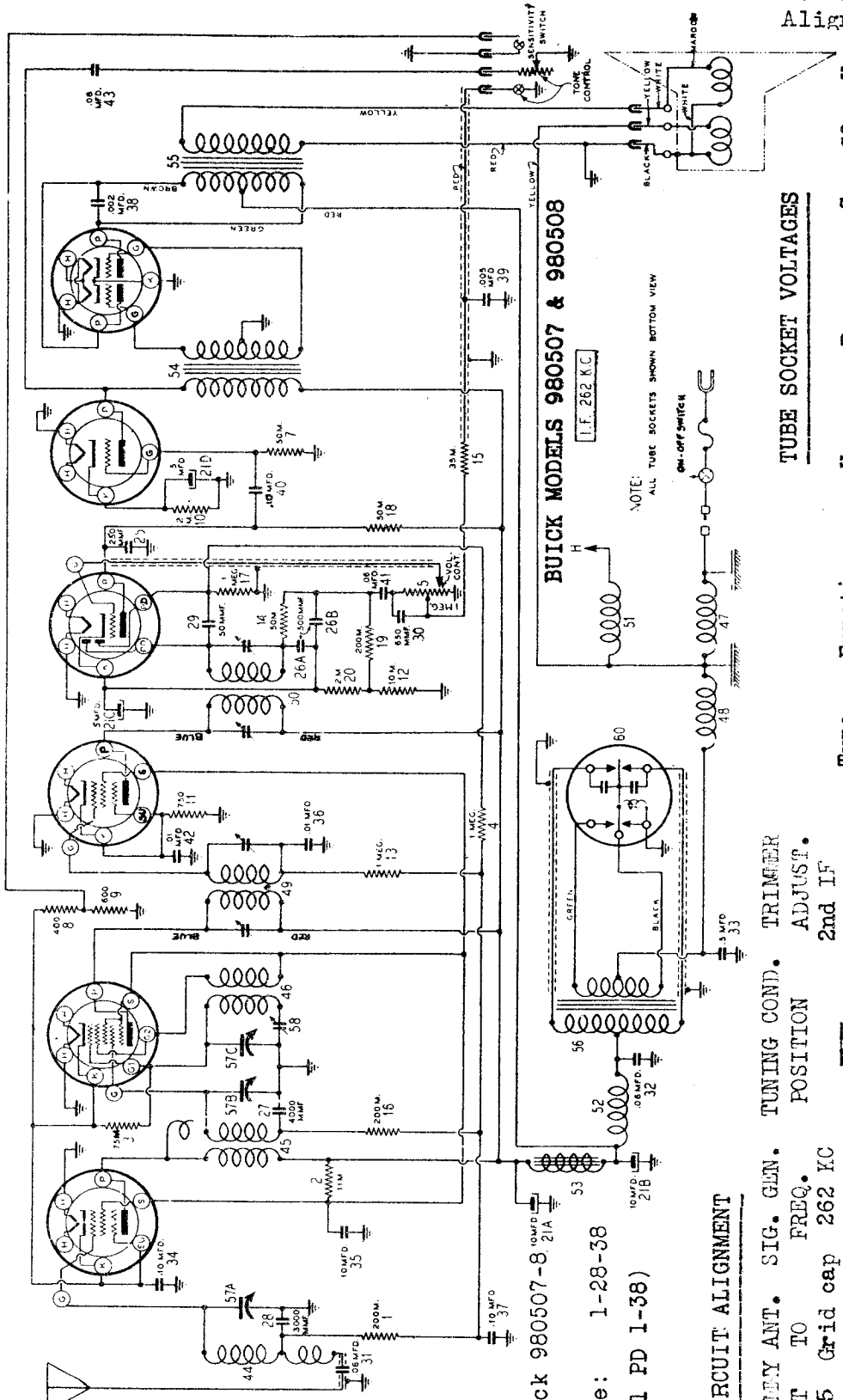

Buick 980507-8
Date: 1-28-38
(221 PD 1-38)

CIRCUIT ALIGNMENT

DUMMY ANT.	SIG. GEN.	TUNING COND.	TRIMMER
UNIT	TO	FREQ.	POSITION	ADJUST.
.25	Grid cap 6A7	262 KC	—	2nd IF
..	..	..	..	1st IF
.0002	Ant. Post	1560KC	Min. Cap.	Osc. Parallel
..	..	1400 KC	Tune to Signal	Ant. Parallel and R.F.
..	..	600 KC	..	Osc. Tracking Condenser.

REPEAT ENTIRE PROCEDURE.

TUBE SOCKET VOLTAGES

Type	Function	H	P	S	G2	K
6D6	R-F	6	240	115	-	7
6A7	Det-Osc.	6	240	115	115	7
6D6	I-F	6	240	115	-	5
85	Det. A.V.C.	6	175	-	-	12
76	A-F Driver	6	225	-	-	13
6A6	Output	6	250	-	-	0

©John F. Rider, Publisher

MODEL 980509 Buick
Schematic, Voltage

UNITED MOTORS SERVICE

This receiver was designed specifically for 1936 Buicks

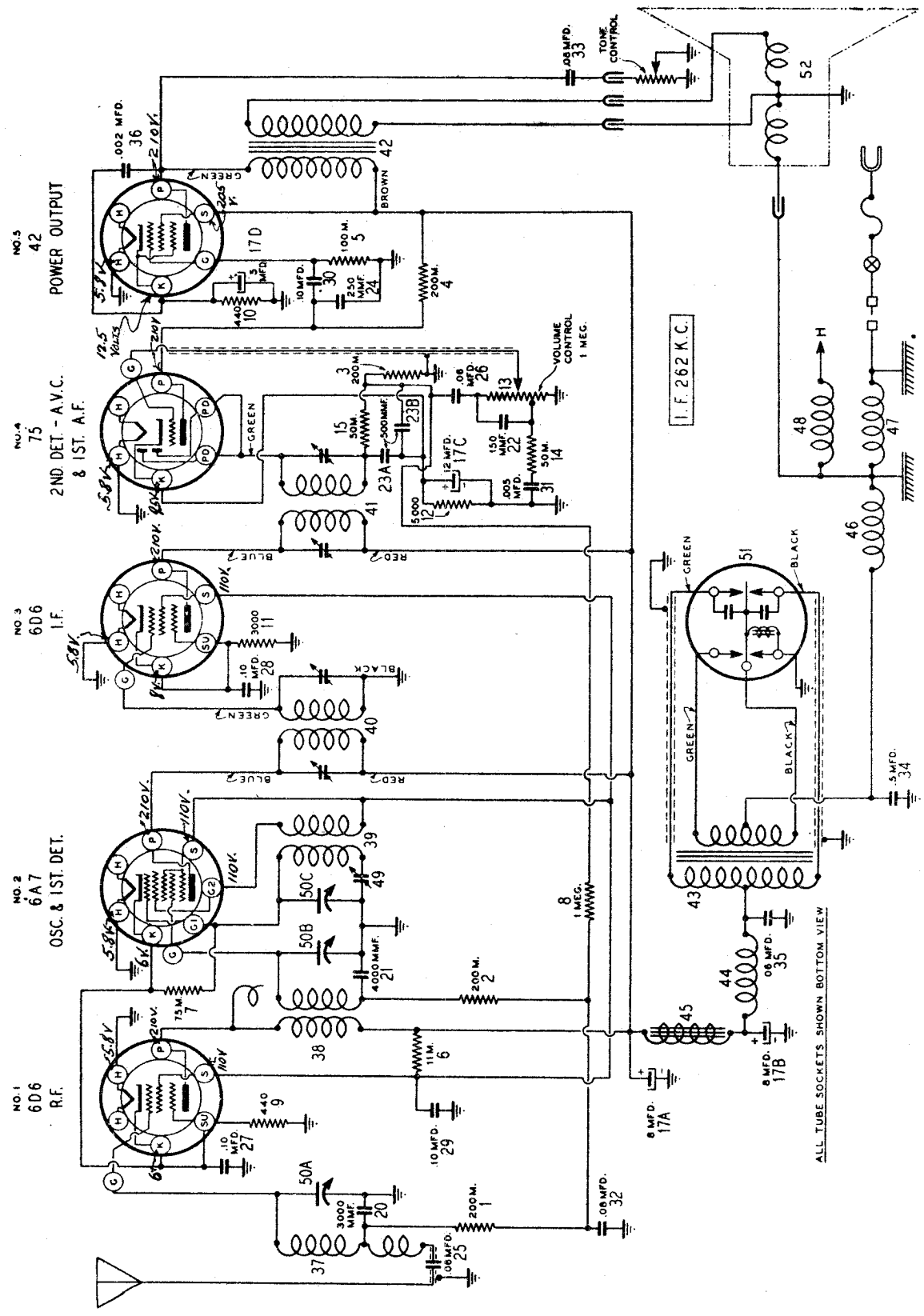

©John F. Rider, Publisher

UNITED MOTORS SERVICE

MODELS 980525,980529
Buick
Schematic,Voltage

This receiver is designed specifically for 1936 Model Buicks.

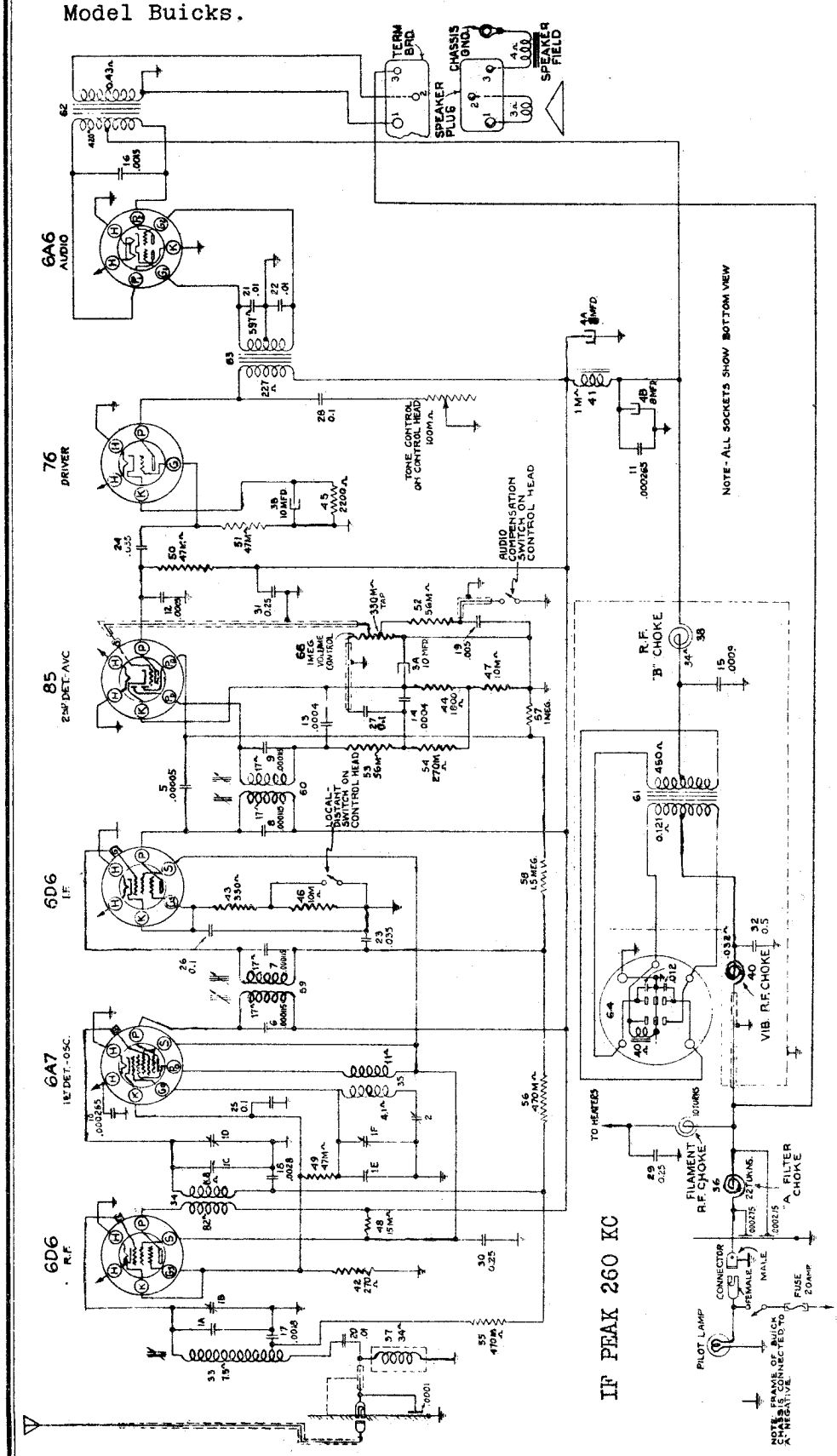

TUBE SOCKET VOLTAGES

Tube	Function	H	P	S	GS	PO	K
6D6	R-F Amp.	6	235	90	4	-	4
6A7	Det.-Osc.	6	235	90	-	90	4
6D6	I-F Amp.	6	235	-	2.6	-	2.6
85	Det.-1st A-F	6	150	-	-	-	14
76	Driver	6	230	-	-	-	11
6A6	Output	6	260	-	-	-	0

BUICK MODEL 980525 and MODEL 980529

NOTE: Model 980525 is equipped with an 8" Dynamic Speaker. Model 980529 is equipped with a five and one half inch Header Speaker.

(391 PD 2-38) Date: 2-14-38

©John F. Rider, Publisher

MODELS 980525,980529
Buick
Socket,Trimmers,Chassis
Alignment

UNITED MOTORS SERVICE

MODEL 980526
Alignment

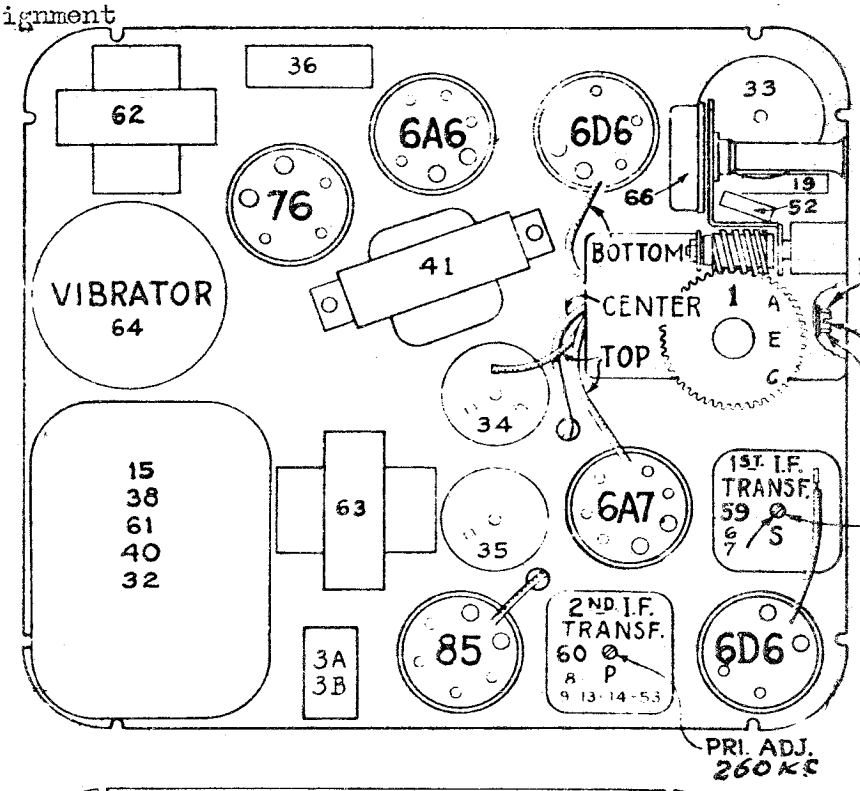

BOTTOM ANT.-1B } 1400KC.
CENTER OSC-1F } 1560KC.
TOP R.F.-1D } 1400KC.

PARTS LAYOUT--Top View

BUICK MODEL 980525 AUTO RADIO

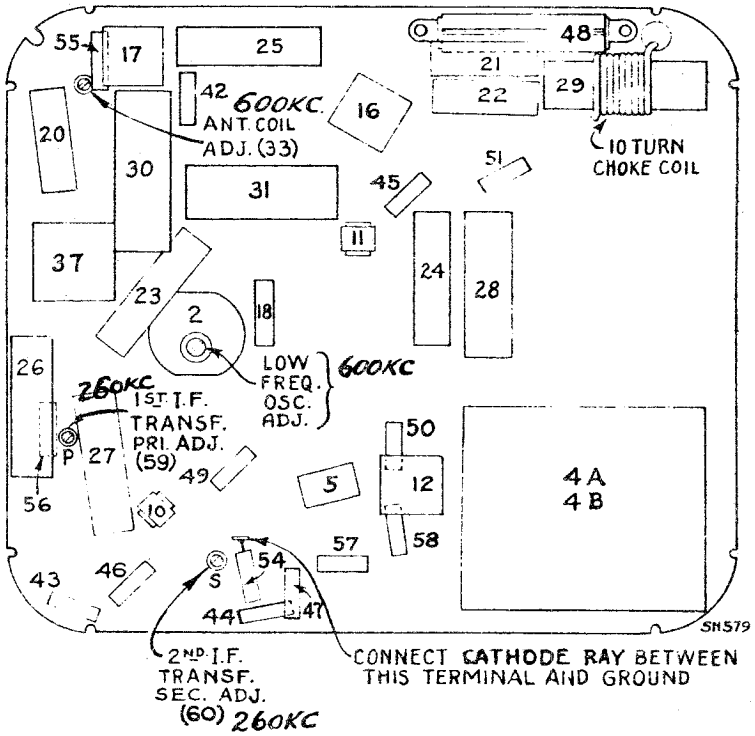

ALIGNMENT PROCEDURE

DUMMY ANT. UNIT TO	SIG. GEN FREQ.	TUNING COND. POSITION	TRIMMER TO ADJUST	
.25 mfd cap.	6A7 grid 260 KC	---	2nd IF	
" "	" "	---	1st IF	
" "	6D6 grid 1560 KC	Min. Cap.	Osc Parallel (OSC 1 F)	
.0002 mfd cap.	Ant. Post 600 KC	Tune to signal	Ant. Coil.	
" "	" " 1400 KC	" "	Parallel (ANT. 1B, R.F. 1D.)	

PARTS LAYOUT
-Bottom View

Checking I-F Band Spread

The Model 165 Cathode Ray Oscillograph should be used to check the I-F band spread after completing the "Alignment Procedure". Slight adjustments to the I-F stages may be found necessary in order to obtain a symmetrical selectivity curve.

©John F. Rider, Publisher

MODEL 980526 Buick
Schematic, Voltage

UNITED MOTORS SERVICE

GENERAL: The Buick Model 980526 is a five tube, single unit, superheterodyne auto radio, designed specifically for 1936 Buicks, and is equipped with an instrument panel tuning control and tone control.

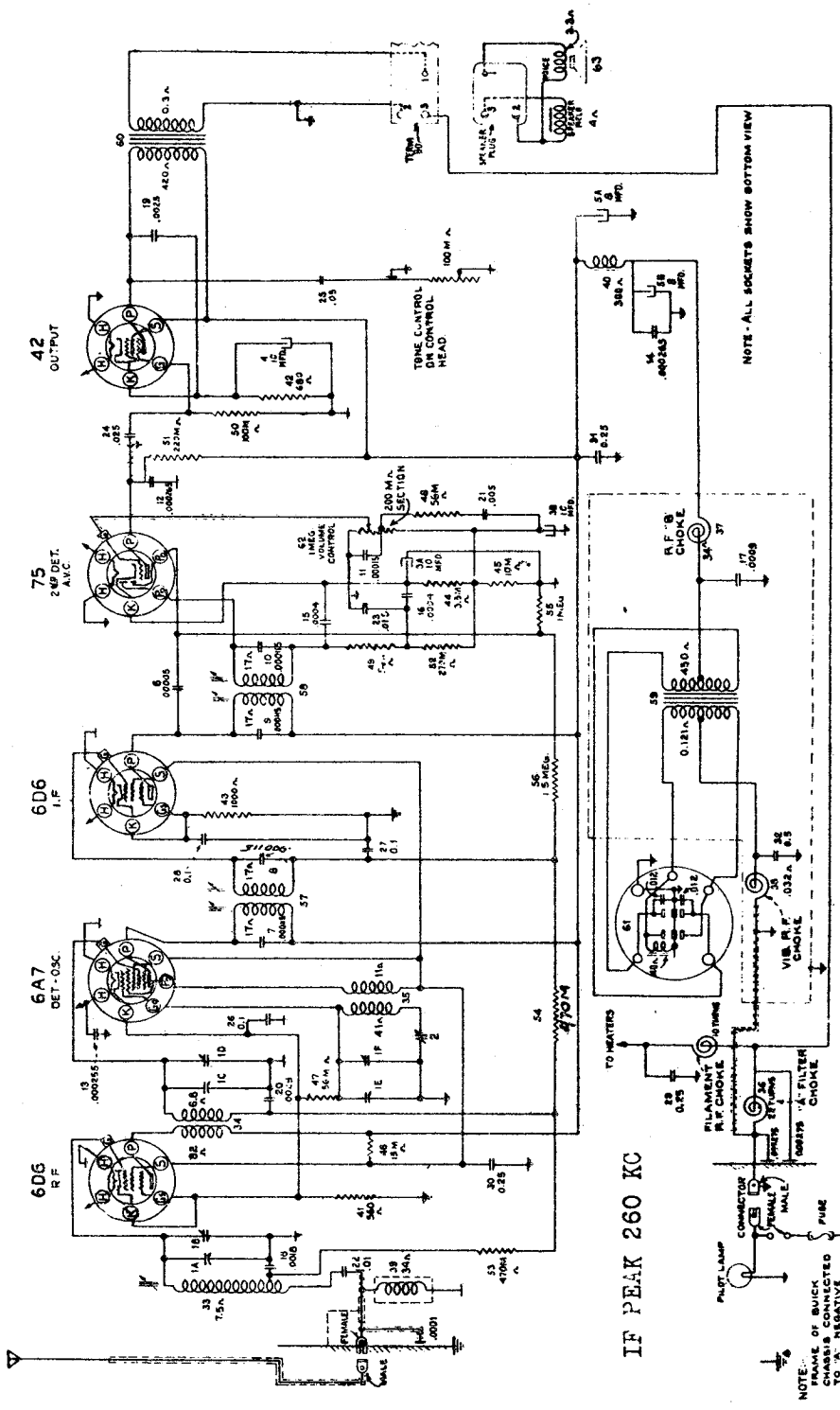

TUBE SOCKET VOLTAGES

BUICK MODEL 980526	Tube	Function	H	P	S	GS	PO	K
FOR ALIGNMENT PROCEDURE	6D6	R-F Amp.	6	260	95	7.4	-	7.4
SEE MODEL 980525	6A7	Det.-Osc.	6	260	95	-	95	7.4
	6D6	I-F Amp.	6	260	95	5.4	-	5.4
(402 PD 2-38)	75	2nd Det.	6	110	-	-	-	3.6
	42	Output	6	250	260	-	-	2.

Date: 2-14-38

©John F. Rider, Publisher

MODEL 980526 Buick
MODEL 980534-5 Buick
Socket, Trimmers
Chassis

UNITED MOTORS SERVICE

Buick 980526

Date: 2-14-38

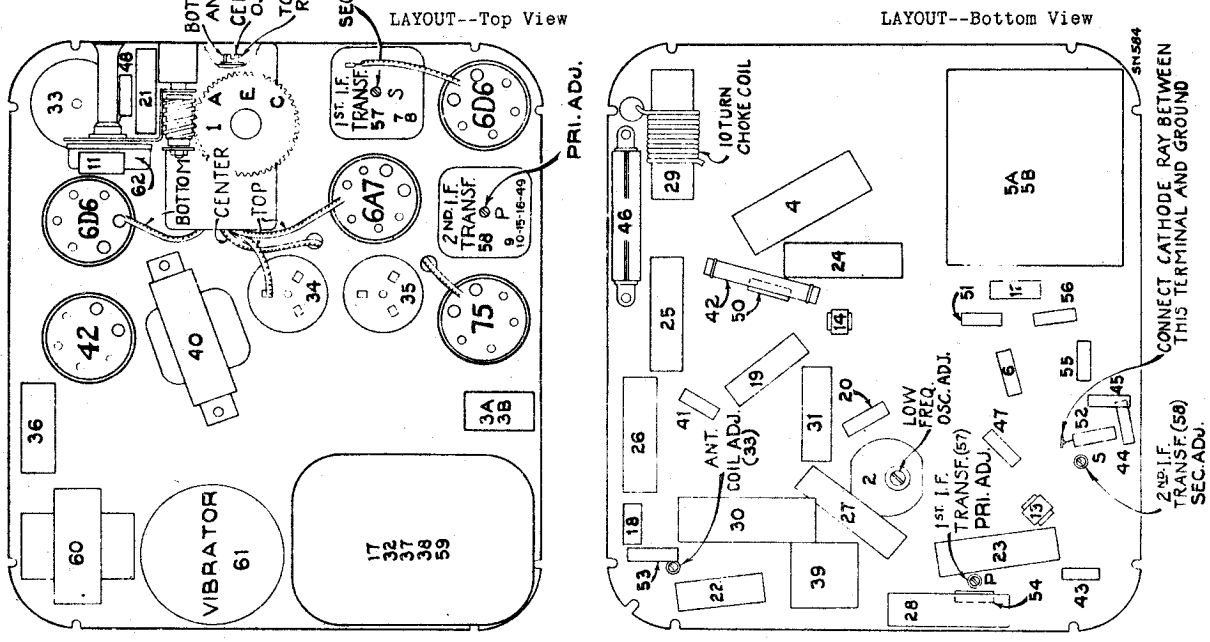

Buick 980534-5

Date: 2-28-38

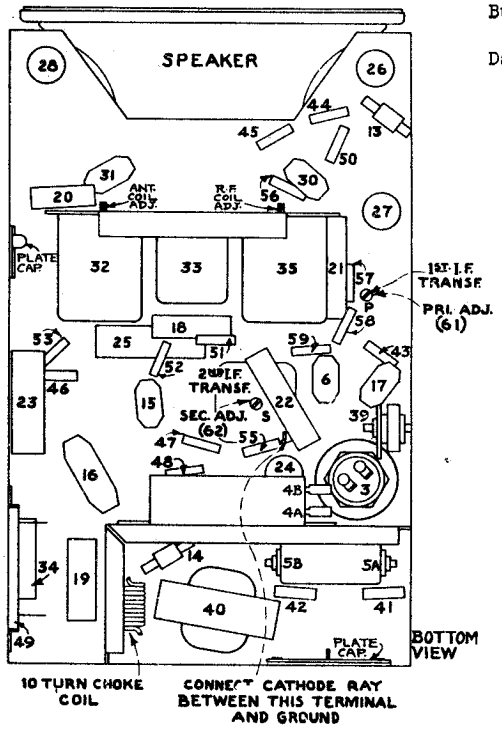

FIG. 3--PARTS LAYOUT--Bottom View

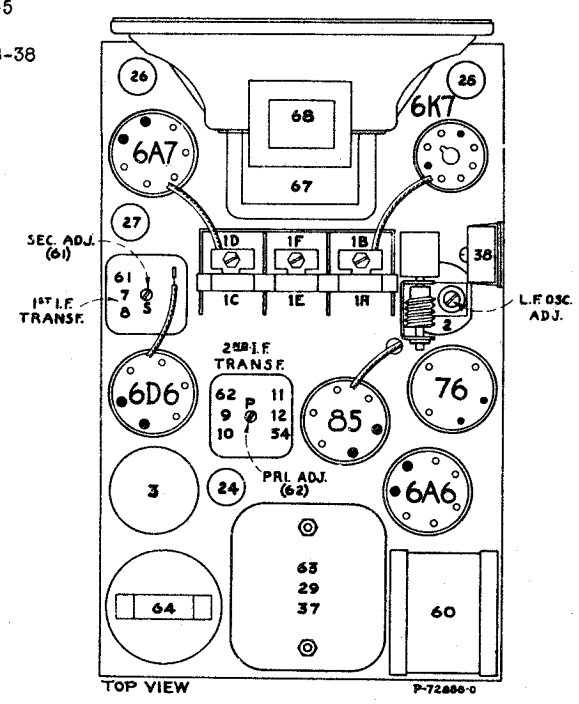

FIG. 2--PARTS LAYOUT--Top View

©John F. Rider, Publisher

UNITED MOTORS SERVICE

MODELS 980534,980535
Buick
Schematic,Voltage

buick

These receivers are designed specifically for the 1937 Model Buicks

Model 980535 is identical to Model 980534 except that an additional speaker is supplied.

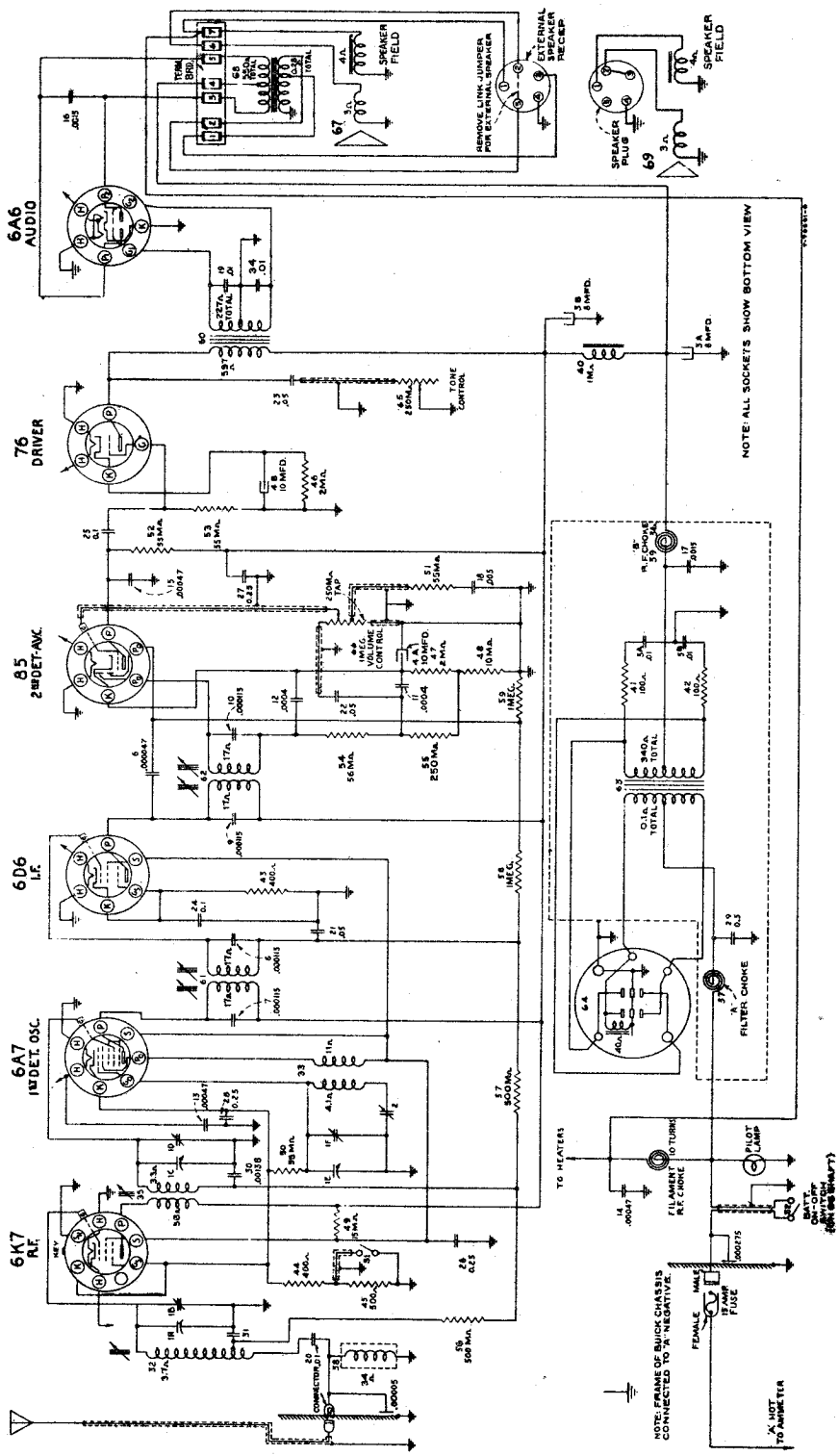

TUBE SOCKET VOLTAGES

IF PEAK 260 KC

	Type	Function	H	P	S	G	Gs	K	Go	Po
BUICK MODELS 980534-5	6K7	R-F Amp.	6.0	235	90	0	5.1	5.1	-	-
	6A7	Det.-Osc.	6.0	235	90	0	-	5.1	1.7	89
	6D6	I-F Amp.	6.0	235	90	0	3.3	3.3	-	-
	85	Det.-Aud.	6.0	145	-	0	-	15.0	-	-
	76	Driver	6.0	230	-	0	-	11.0	-	-
Buick 980534-5	6A6	Output	6.0	260	-	0	-	0	-	-

Date: 2-28-38

Readings taken on 6.3 volt battery using a 1000 ohm per volt meter from tube socket contacts to ground.

©John F. Rider, Publisher

MODELS 980534,980535
Buick
Chassis Wiring

UNITED MOTORS SERVICE

Models 980534 and 980535

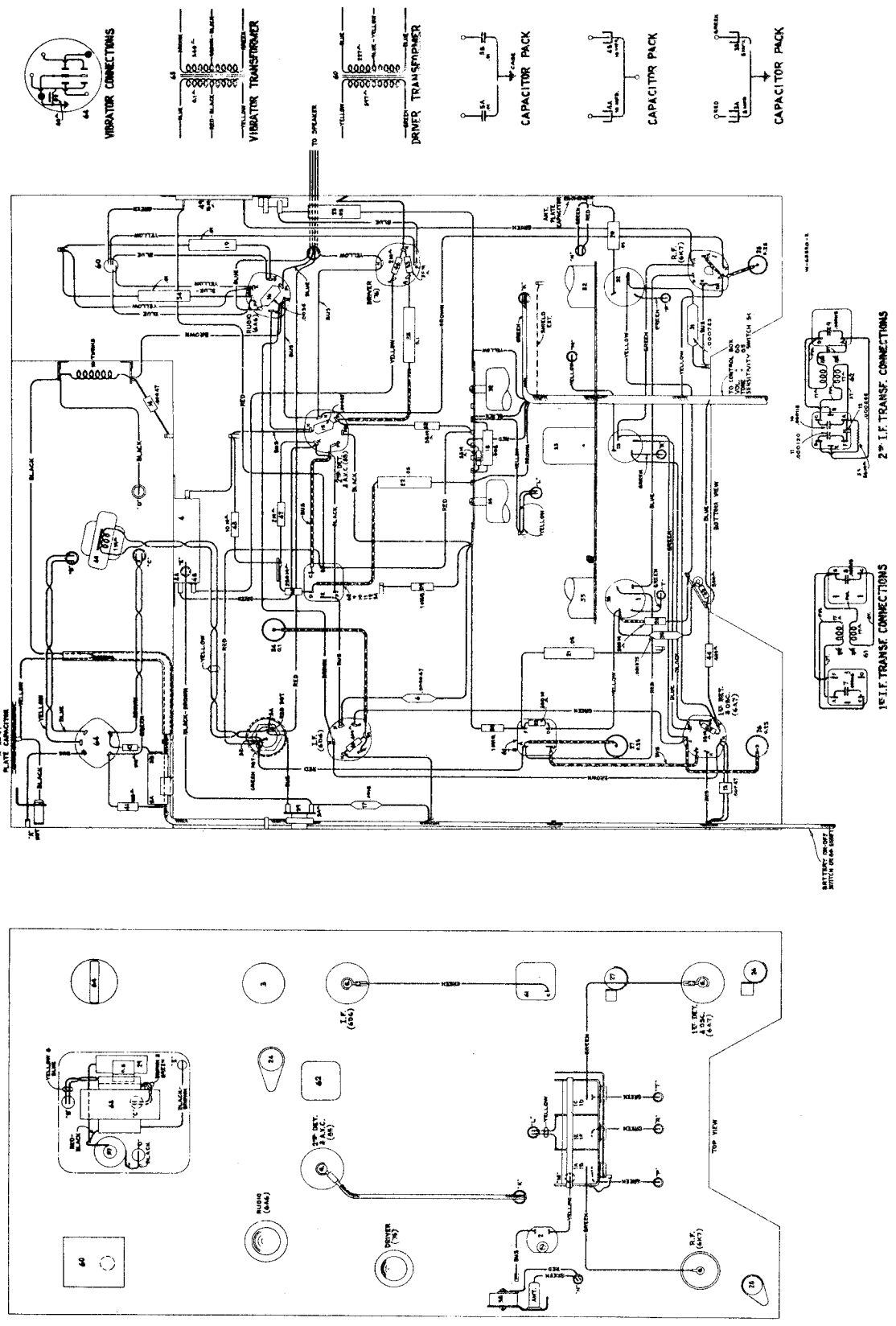

©John F. Rider, Publisher

©John F. Rider, Publisher

CIRCUIT ALIGNMENT

NOTE: BEFORE STARTING ALIGNMENT PROCEDURE, SEE THAT EITHER A JUMPER IS INSTALLED IN THE DUAL SPEAKER PLUG SOCKET (SEE CIRCUIT DIAGRAM) OR THE DUAL SPEAKER ITSELF IS CONNECTED. FAILURE TO DO THIS WILL RESULT IN AN OPEN CIRCUIT IN THE VOICE COIL.

1. Aligning I-F Stages at 260 Kilocycles

(a) Remove the top and bottom covers from the receiver case and place the receiver so that all adjustments are accessible. Connect the signal output of the signal generator to the control gid cap of the 6A7 tube through a .25 mfd. condenser (without disconnecting the grid lead) and connect the ground of the signal generator to the receiver chassis. Connect the Output Meter across the two plates of the 6A6 power tube for output indication. Tune the signal generator accurately to 260 KC. Adjust the four screws of the two I-F transformers, one on top and one on bottom of each transformer (Illus. #61 and 62, Figs. 2 & 3) for maximum output. Repeat these adjustments a second time for greater accuracy.

Checking I-F Band Spread

The Model 165 Cathode Ray Oscillograph should be used to check the I-F band spread after completing the "Alignment Procedure". Slight adjustments to the I-F stages may be found necessary in order to obtain a symmetrical selectivity curve. Complete information concerning this check with the Oscillograph, is given in the Oscillograph Manual, included with each instrument.

2. R-F Stage Alignment

The antenna and R-F coils used in these receivers contain adjustable iron cores, which require very careful adjustment at the factory. These adjustments are sealed and no further attempts to adjust them in service should be made unless they show evidence of being disturbed or tampered with. In any event where realignment is deemed necessary, the capacity adjustments should be made first in an effort to obtain normal sensitivity.

Two separate procedures are given for aligning the R-F circuits of these receivers and the procedure to be used will depend on whether the sealed iron core adjustments have been disturbed. The first procedure contains only capacity adjustments, while the second procedure contains both capacity and inductance adjustments.

The service replacement iron core antenna and R-F coils are pre-set at the factory and in most instances will require no further adjustment.

Properly align the tuning dial pointer to the gang tuning condenser by turning the receiver tuning control clockwise until all stops are reached at the high-frequency end of the dial, then rotate the tuning control counter-clockwise until all stops are reached at the low-frequency end of the dial.

IN THE FOLLOWING PARAGRAPHS WHEN ALIGNMENT IS MADE AT 600 K.C. THE DIAL POINTER ON THE CONTROL HEAD SHOULD BE SET TO THE CENTER OF THE "O" IN "60" WHEN LOOKING STRAIGHT INTO THE DIAL.

3. Aligning R-F Stages--Capacity Adjustments

(a) Connect the signal generator to the control grid cap of the 6A7 detector-oscillator tube through a .25 mfd. condenser. Adjust the signal generator to 1560 KC. Set the receiver tuning control to its mimimum capacity (full open) position. Adjust the oscillator parallel trimmer (Illus. 1-F, Fig. 2) for maximum output.

(b) Connect the signal generator to tne antenna connection on the receiver through a .0005 mica condenser and adjust to 1400 KC. Tune the receiver to this signal and adjust the R-F and antenna trimmers (Illus. 1-D and 1-B, Fig. 2) on gang condenser for maximum output.

(c) Adjust signal generator to 600 KC and tune receiver to 600 KC. Adjust the oscillator series condenser (Illus. #2, Fig. 2) while rocking the gang tuning condenser back and forth through the signal, for maximum output.

(d) Adjust signal generator to 1400 KC and tune receiver to this signal. Readjust the oscillator, R-F, and antenna trimmers (Illus. #1-F, 1-D and 1-B, Fig. 2) for maximum output.

4. Aligning R-F Stages--Capacity and Inductance Adjustments

This procedure covers all R-F adjustments and should not be resorted to, unless the adjustments outlined in section "3" fail to restore normal sensitivity.

(a) Connect the signal generator to the control grid cap of the 6A7 tube through a .25 mfd. condenser. Adjust the signal generator to 1560 KC. Set the receiver tuning control to its minimum capacity (full open) position. Adjust the oscillator parallel trimmer (Illus. #1-F, Fig. 2) for maximum output.

(b) Adjust the signal generator to 600 KC and set the receiver dial to 600 KC. Adjust the oscillator series condenser (Illus. #2, Fig. 2) for maximum output.

(c) Adjust the signal generator to 1560 KC and set the receiver tuning to its minimum capacity (full open) position. Adjust the oscillator parallel trimmer (Illus. #1-F, Fig. 2) for maximum output.

(d) Connect signal generator to the antenna connector of the receiver through a .0005 mfd. mica condenser. Adjust the signal generator to 600 KC and tune the receiver to this signal. Adjust the magnetite core screws of the R-F and antenna coils (Illus. #35 and #32, Fig. 3) for maximum output.

(e) Adjust signal generator to 1400 KC and tune receiver to this signal. Adjust the oscillator, R-F and antenna trimmers (Illus. #1-F, 1-D and 1-B, Fig. 2) for maximum output.

(f) Adjust signal generator to 600 KC and tune the receiver to this signal. Adjust the R-F and antenna magnetite core screws (Illus. #35 and #32, Fig. 3) for maximum output.

(g) Adjust signal generator to 600 KC and tune receiver to 600 KC. Adjust the oscillator series condenser (Illus. #2, Fig. 2) while rocking the gang tuning condenser back and forth through the signal, for maximum output.

(h) Adjust signal generator to 1400 KC and tune receiver to this signal. Readjust the oscillator, R-F, and antenna trimmers (Illus. #1-F, 1-D and 1-B, Fig. 2) for maximum output.

MODEL 1304873(980566)
Buick
Schematic,Voltage
Socket,Trimmers,Chassis

UNITED MOTORS SERVICE

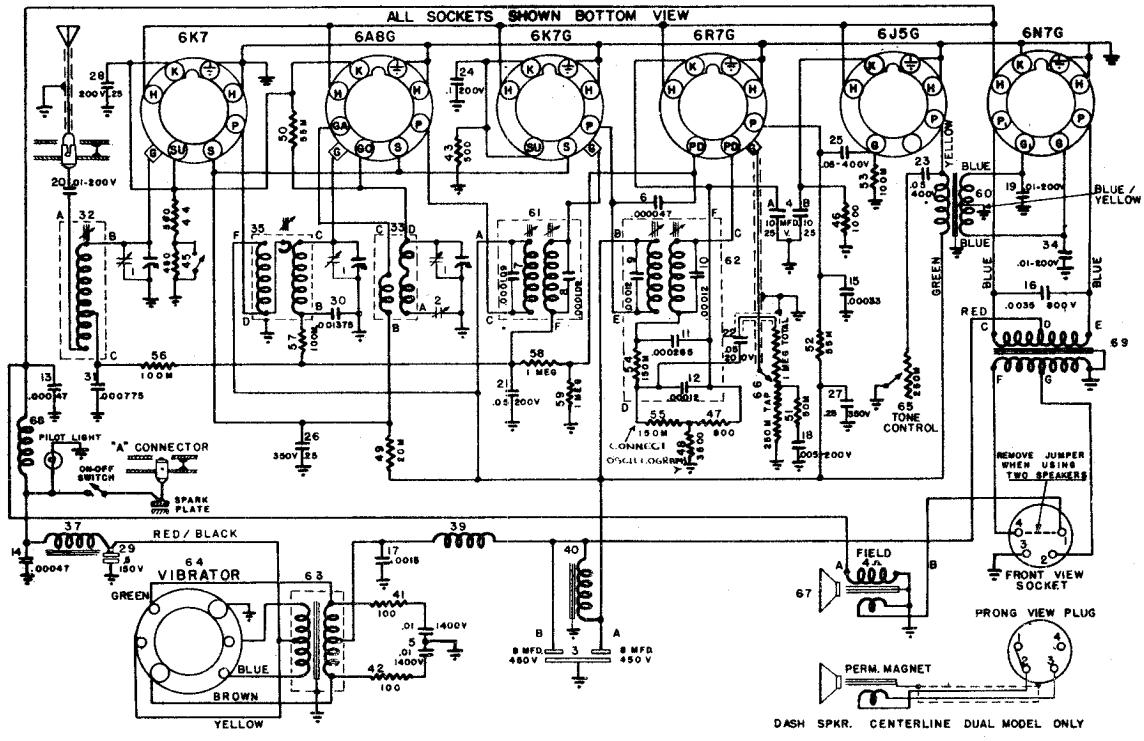

I-F 262 KC

FIG. 2--BUICK MODEL 1304873 (980566)

BUICK MODEL
1304873
(980566)

Date 11-4-37.

TUBE SOCKET VOLTAGES

TUBE	H	P	S	Su	G2	K	Go	Ga
6K7	5.9	218	83	6.0	--	6.0	--	--
6AG8	5.9	218	83	--	--	6.0	10	80
6K7G	5.9	218	83	2.7	--	2.7	--	--
6R7G	5.9	145	--	--	--	6.0	--	--
6J5G	5.9	215*	--	--	--	7.2	--	--
6N7G	5.9	255(P1&P2)						

Readings between socket terminals & gnd. with D.C. voltmeter, 1000 ohms/volt. current drain 7.1 amps. with dial light& Speaker "B" supply drain approx 60 MA. Sensitivity switch closed 6 v. at "A" connector.

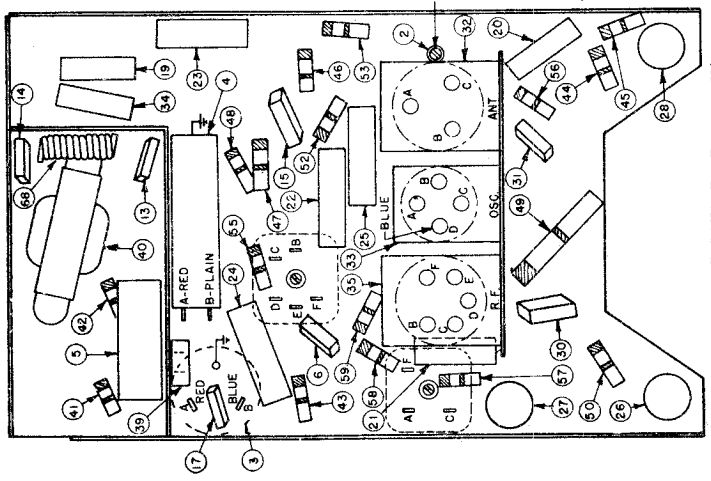

FIG. 4--PARTS LAYOUT--Bottom View

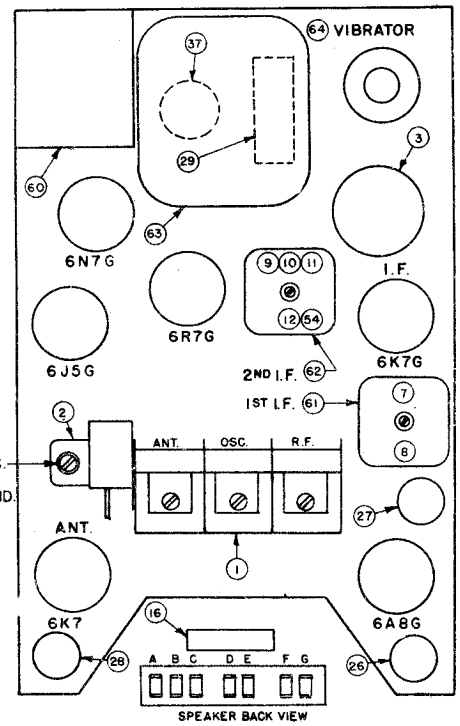

FIG. 3--PARTS LAYOUT--Top View

©John F. Rider, Publisher

UNITED MOTORS SERVICE

MODEL 983526 Pontiac
Schematic, Voltage

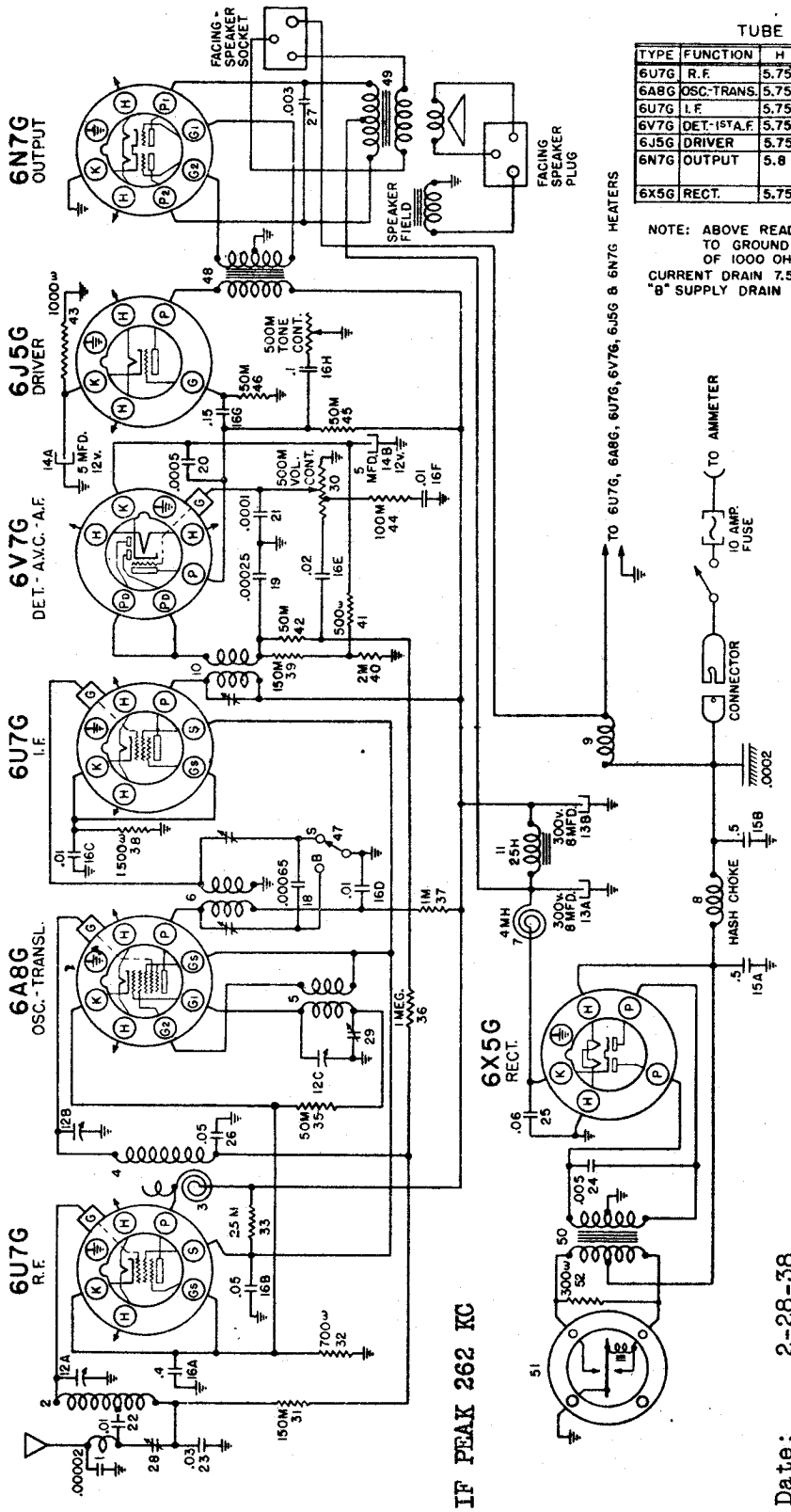

TUBE SOCKET VOLTAGE

TYPE	FUNCTION	H	P	S	G₂	G₂	K
6U7G	R.F.	5.75	230	60	8.5		8.5
6A8G	OSC-TRANS.	5.75	230		60	60	8.5
6U7G	I.F.	5.75	230	60	3.6		3.6
6V7G	DET.-1ST A.F.	5.75	90				6.0
6J5G	DRIVER	5.75	230				7.5
6N7G	OUTPUT	5.8	P₁ 230 P₂ 230				
6X5G	RECT.	5.75	A.C.				240

NOTE: ABOVE READINGS TAKEN FROM TUBE SOCKET CONTACTS TO GROUND WITH A D.C. VOLTMETER HAVING A RESISTANCE OF 1000 OHMS PER VOLT; "A" BATTERY - 6 VOLTS.
CURRENT DRAIN 7.5 AMPERES.
"B" SUPPLY DRAIN APPROXIMATELY 52 MA.

FIG. 1--PONTIAC MODEL 983526 CIRCUIT DIAGRAM

Date: 2-28-38

GENERAL: The Pontiac Model 983526 is a seven tube, "dash" speaker receiver with a "Local-Distance" switch and tone control. The receiver was designed for operation in 1937 Pontiacs and is equipped with an instrument panel tuning control having a tone control in addition to the tuning and volume controls.

©John F. Rider, Publisher

MODEL 983526 Pontiac
Socket,Trimmers
Chassis,Alignment

UNITED MOTORS SERVICE

CIRCUIT ALIGNMENT

Pontiac Model 983526

Aligning I-F Stages at 262 Kilocycles

IMPORTANT: The "Local-Distance" switch on the tuning control used with this receiver is used to control the alignment of the first I-F coil windings. It is important, therefore, in peaking the I-F stages, that the "Local-Distance" switch be placed in the "Distance" position.

Connect the signal lead of the signal generator to the grid cap of the 6A8G Translator Tube through a .1 mfd. condenser, leaving the tube's grid clip in place. Connect the ground lead of the signal generator to the chassis frame.

Turn "Local-Distance" switch on set to "DISTANCE" position. (If the receiver is aligned with the switch in the "Local" position, the "Local-Distance" switch will operate backwards.)

Connect the output meter across the plate prongs of the 6N7G tube.

Set the signal generator to exactly 262 kilocycles.

Adjust the trimmers on the I-F coils (Illus. 6 & 10, Fig. 3) for maximum output. These adjustments should be repeated several times.

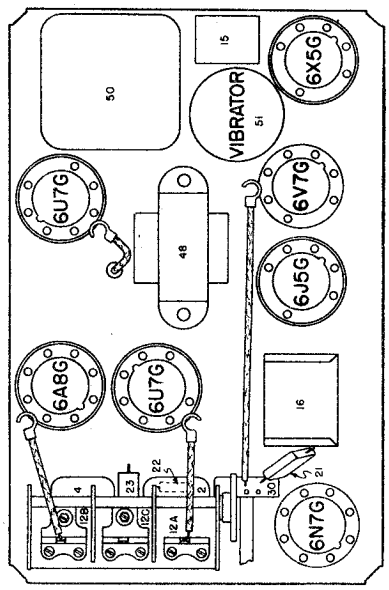

FIG. 2--PARTS LAYOUT--Top View

Aligning at 1530 Kilocycles

Leave the signal generator leads connected the same for aligning the I-F circuits. Turn the rotor plates of the gang condenser all the way out and against the high frequency stop. Set the signal generator to 1530 kilocycles. Adjust the parallel trimmer for the oscillator section of the condenser gang (Illus. 12C, Fig. 2) for maximum output. (It is very important that this frequency be set accurately as a slight mis-setting will cause the receiver to be out of track over the entire high frequency end of the dial.)

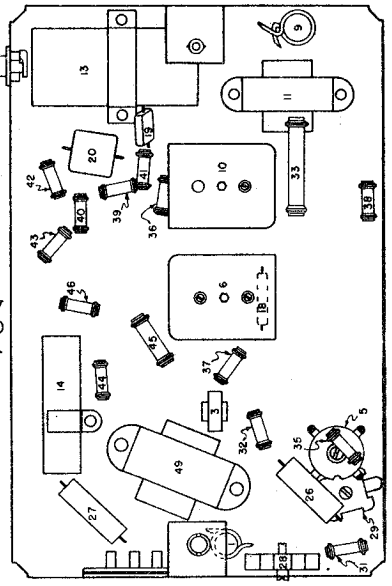

FIG. 3--PARTS LAYOUT--Bottom View

Aligning at 540 Kilocycles

Leave signal generator leads connected the same as before. Turn the rotor plates of the gang condenser all the way into mesh so that they rest against the low frequency stop. Set the signal generator to 540 K.C. Adjust the oscillator padding condenser (Illus. 29, Fig. 3) located on the under-side of the receiver sub-panel to maximum output.

Aligning at 1400 Kilocycles

Remove the signal lead of the signal generator from the grid of the 6A8G Translator tube and connect to the antenna terminal of the receiver THROUGH A .0002 mfd. MICA CONDENSER connected in place of the .1 mfd. condenser previously used. Set the signal generator to 1400 K.C. Turn the condenser rotor plates until this frequency is tuned in with maximum output. Adjust the R-F parallel trimmer on the condenser gang (Illus. 12B, Fig. 2) and the antenna compensating condenser (Illus. 28, Fig. 3) located on the side of the receiver case for maximum output.

Aligning at 600 Kilocycles

Set the signal generator on 600 K.C. Turn the condenser rotor plates until the signal from the signal generator is tuned in with maximum output. Maintain a low output signal from the signal generator and readjust the oscillator tracking condenser (Illus. 29, Fig. 3) while rocking the variable condenser gang tuning shaft back and forth through the signal. This operation should be continued until no further increase in output can be obtained.

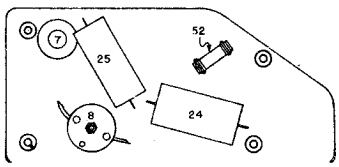

FIG. 4--PARTS LAYOUT--Vibrator Filter

Date: 2-28-38

©John F. Rider, Publisher

UNITED MOTORS SERVICE

MODEL 983527 Pontiac
Schematic, Voltage
Socket, Trimmers
Chassis

Date:
3-7-38

GENERAL: The Pontiac Model 983527 is a six tube single unit receiver with a "Local-Distance" switch, tone control and 8" Dynamic Speaker. This receiver was designed for operation in 1937 Model Pontiacs and is equipped with an instrument panel type tuning control.

TUBE SOCKET VOLTAGE

TYPE	FUNCTION	H	P	S	Gs	G1	G2	K
6U7G	R.F.	5.75	230	60	2.5			2.5
6A8G	OSC.-TRANS.	5.75	230		60	- 3.0	60	2.5
6U7G	I.F.	5.75	230	60	5.0			5.0
6Q7G	DET.-1ST A.F.	5.75	80					1.2
6F6G	OUTPUT	5.8	220	230				14.0
6X5G	RECT.	5.75	A.C.					240

NOTE: ABOVE READINGS TAKEN FROM TUBE SOCKET CONTACTS TO GROUND WITH A D.C. VOLTMETER HAVING A RESISTANCE OF 1000 OHMS PER VOLT; "A" BATTERY 6 VOLTS.
CURRENT DRAIN 6.8 AMPERES
"B" SUPPLY DRAIN APPROXIMATELY 52 MA.

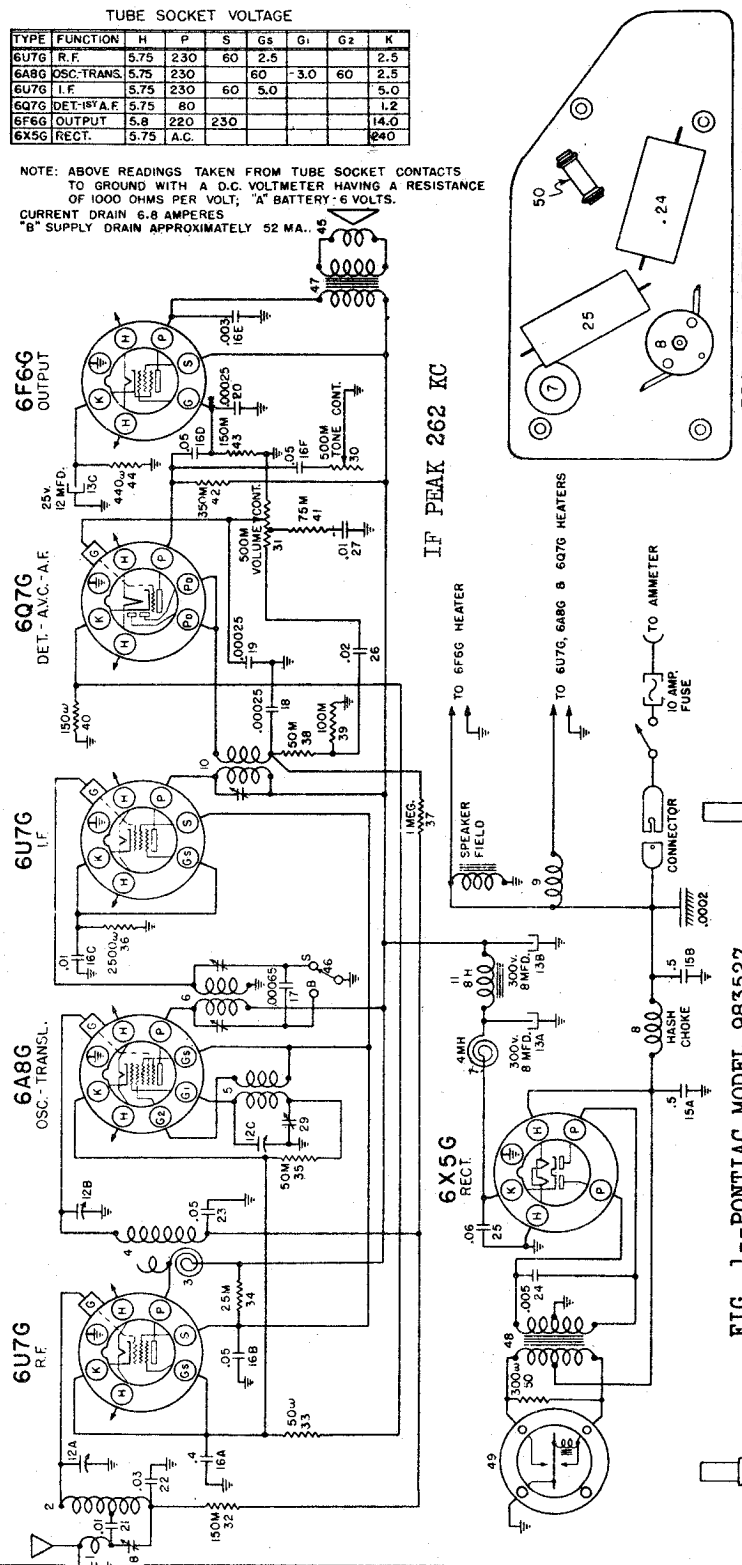

FIG. 1--PONTIAC MODEL 983527

FIG. 4--VIBRATOR FILTER

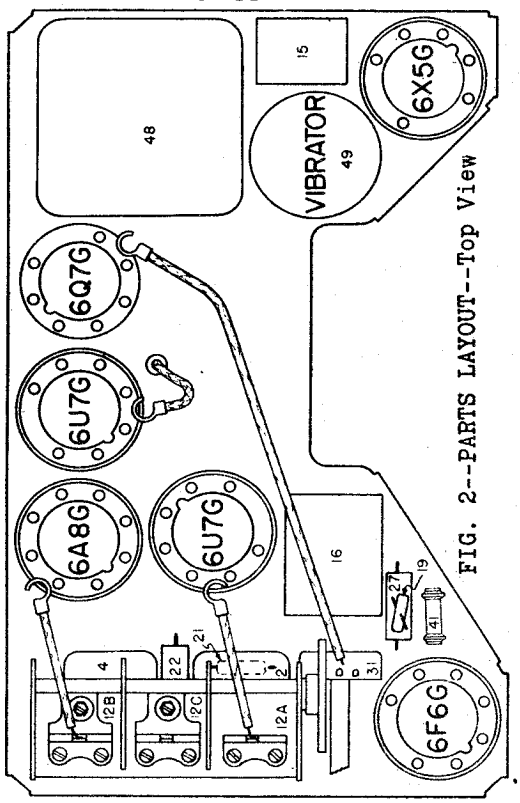

FIG. 2--PARTS LAYOUT--Top View

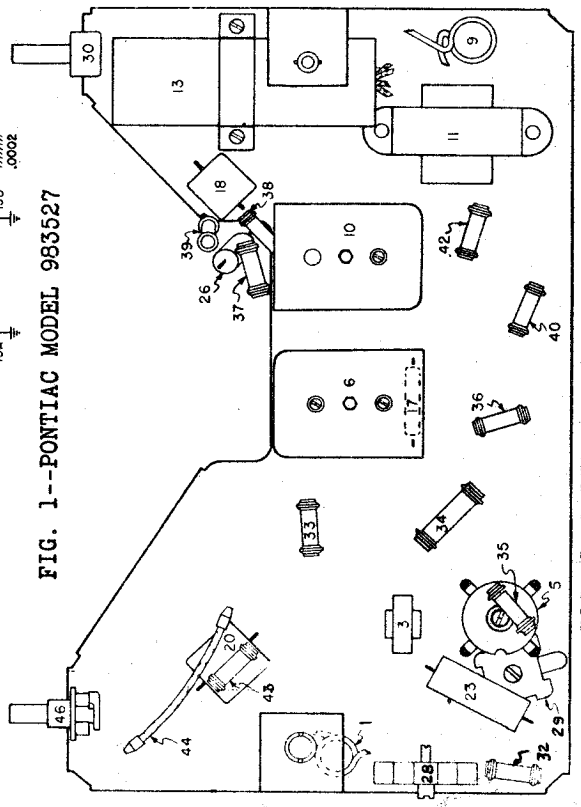

FIG. 3--PARTS LAYOUT--Bottom View

©John F. Rider, Publisher

MODEL 983527 Pontiac
Alignment

UNITED MOTORS SERVICE

Pontiac 983527

2. Aligning at 1530 Kilocycles

(a) Leave the signal generator leads connected the same as for aligning the I-F circuits.

(b) Turn the rotor plates of the gang condenser all the way out and against the high frequency stop.

(c) Set the signal generator to 1530 kilocycles.

(d) Adjust the parallel trimmer for the oscillator section of the condenser gang (Illus. 12C, Fig. 2) for maximum output. It is very important that this frequency be set accurately as a slight mis-setting will cause the receiver to be out of track over the entire high frequency end of the dial.

3. Aligning at 540 Kilocycles

(a) Leave signal generator leads connected the same as before.

(b) Turn the rotor plates of the gang condenser all the way into mesh so that they rest against the low frequency stop.

(c) Set the signal generator to 540 K.C.

(d) Adjust the oscillator tracking condenser (Illus. 29, Fig. 3) located on the under-side of the receiver sub-panel to maximum output.

4. Aligning at 1400 Kilocycles

(a) Remove the signal lead of the signal generator from the grid of 6A8G tube and connect to the antenna terminal of the receiver THROUGH A .0002 mfd. MICA CONDENSER connected in place of the .1 mfd. condenser previously used.

(b) Set the signal generator to 1400 K.C.

(c) Turn the condenser rotor plates until this frequency is tuned in with maximum output.

(d) Adjust the R-F parallel trimmer on the condenser gang (Illus. 12B, Fig. 2) and the antenna compensating condenser, (Illus. 28, Fig. 3) located on the side of the receiver case for maximum output.

5. Aligning at 600 Kilocycles

The oscillator padding condenser was previously adjusted at 540 K.C.; however, it is necessary in most cases to repeak this condenser at 600 K.C. in order to make the receiver track properly and to secure full sensitivity.

(a) Set the signal generator on 600 K.C.

(b) Turn the condenser rotor plates until the signal from the signal generator is tuned in with maximum output.

(c) Maintain a low output signal from the signal generator and readjust the oscillator tracking condenser (Illus. 29, Fig. 3) while rocking the variable condenser gang tuning shaft back and forth through the signal. This operation should be continued until no further increase in output can be obtained.

1. Aligning I-F Stages at 262 Kilocycles

(a) Connect the signal lead of the signal generator to the grid cap of the 6A8G tube, through a .1 mfd. condenser, leaving the tube's grid clip in place. Connect the ground lead of the signal generator to the chassis frame.

(b) Connect the output meter from the plate of the 6F6G tube to ground.

(c) Place Local-Distance switch in "Distance" position.

(d) Set the signal generator at exactly 262KC.

(e) Adjust trimmers on the IF coils (6 and 10 FIG. 3) carefully for maximum output. Repeat adjustments several times.

©John F. Rider, Publisher

UNITED MOTORS SERVICE

MODEL 983534 Pontiac
Schematic

If realignment is found necessary, the circuits can be properly adjusted only with the use of a calibrated test oscillator, or signal generator, and an output meter.

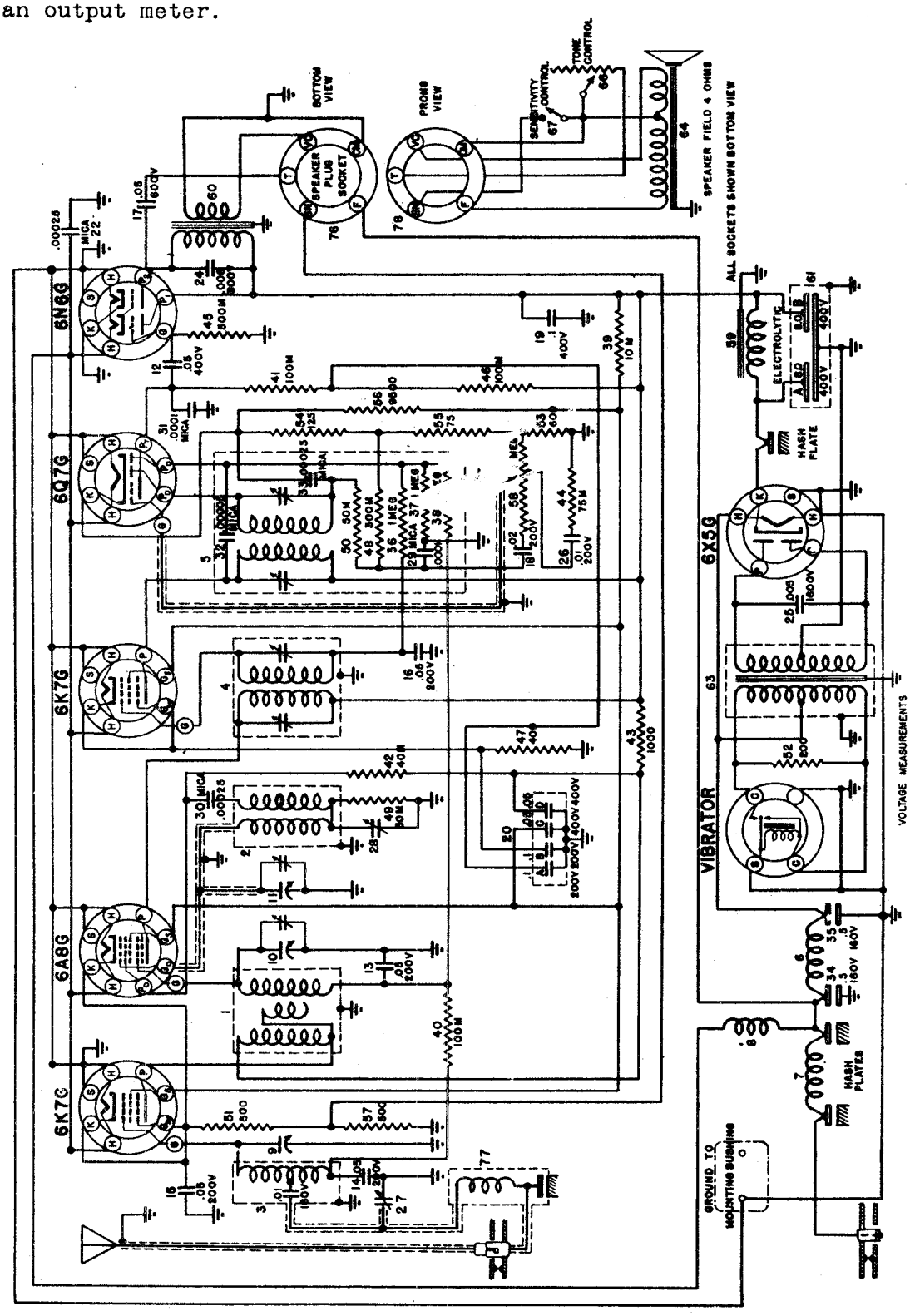

Pontiac 983534

Date: 3-7-38

GENERAL: The Pontiac Model 983534 is a six tube single unit auto radio, with tone and sensitivity controls and bass compensation. A non-synchronous vibrator and a tube type rectifier is used in the power supply in a full wave circuit.

©John F. Rider, Publisher

MODEL 983534 Pontiac
Socket, Trimmers
Chassis, Voltage
Alignment

UNITED MOTORS SERVICE

CIRCUIT ALIGNMENT

Pontiac 983534

1. Aligning I-F Stages at 262 Kilocycles

   (a) Connect the signal lead of the signal generator to the grid cap of the 6A8G translator tube, through a .1 mfd. condenser, leaving the tube's grid clip in place. Connect the ground lead of the signal generator to the chassis frame.

   (b) Connect the output meter from the plate of the 6N6G to ground. (Care should be taken when connecting the output meter to insert a series condenser to protect the meter from D.C. voltages.)

   (c) Set the signal generator to exactly 262 K.C.

   (d) Turn receiver volume control on full and tuning condenser plates out of mesh. Adjust the trimmers on the I-F coils (Illus. 4 and 5, Fig. 2) for maximum output. These adjustments should be repeated several times and during alignment the signal generator output should be kept to as low a value as is consistent with obtaining a readable indication on the output meter.

2. Aligning at 1560 Kilocycles

   (a) Leave the signal generator leads connected the same as for aligning the I-F circuits.

   (b) Turn the rotor plates of the gang condenser all the way out and against the high frequency stop.

   (c) Set the signal generator to 1560 kilocycles.

   (d) Adjust the parallel trimmer for the oscillator section (middle) of the condenser gang (Illus. 11, Fig. 2) for maximum output. (It is very important that this frequency be set accurately as a slight mis-setting will cause the receiver to be out of track over the entire high frequency end of the dial.)

3. Aligning at 1400 Kilocycles

   (a) Remove the signal lead of the signal generator from the grid of the translator (6A8G) tube and connect to the antenna terminal of the receiver THROUGH A .0002 mfd. MICA CONDENSER connected in place of the .1 mfd. condenser previously used. (It is very important that this mica condenser be used in aligning the antenna stage of these receivers in order that this circuit can be made to track properly.)

   (b) Set the signal generator to 1400 K.C.

   (c) Turn the condenser rotor plates until the frequency is tuned in with maximum output.

   (d) Adjust the R-F parallel trimmer on the condenser gang (top section) and the antenna compensating condenser, (Illus. 27, Fig. 3) for maximum output.

4. Aligning at 600 Kilocycles

   (a) Set the signal generator on 600 K.C.

   (b) Turn the condenser rotor plates until the signal from the signal generator is tuned in with maximum output.

   (c) Maintain a low output signal from the signal generator and readjust the oscillator tracking condenser (Illus. 28, Fig. 3) while rocking the variable condenser gang tuning shaft back and forth through the signal.

   (d) This operation should be continued until no further increase in output can be obtained.

5. Realigning at 1400 Kilocycles

   (a) Recheck alignment of R-F section of condenser gang and antenna compensating condenser (Illus. 27, Fig. 3) as given in paragraph 3.

   (b) It will be necessary to readjust the antenna compensating condenser upon installation in a car.

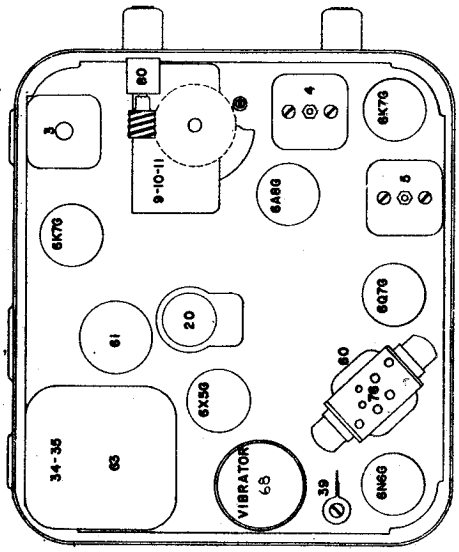

FIG. 2--PARTS LAYOUT--Top View

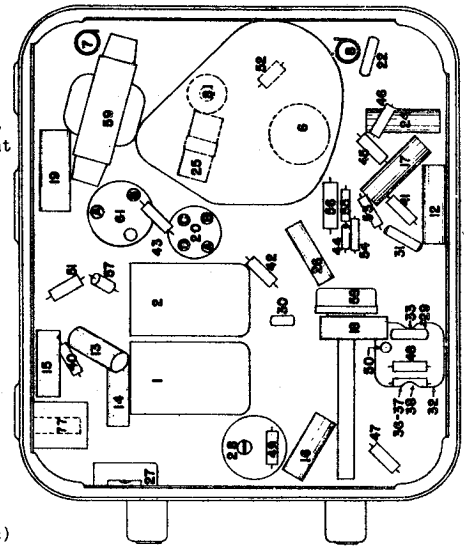

FIG. 3--PARTS LAYOUT--Bottom View

PONTIAC MODEL 983534 AUTO RADIO

TUBE SOCKET VOLTAGES

Type	Function	H	P	Gs	Su	Po	P1	K
6K7G	R-F Amp.	6.0	235	90	4.0	-	-	4.0
6A8G	Osc.-Mod.	6.0	245	90	-	120	-	4.0
6K7G	I-F Amp.	6.0	245	90	2.5	-	-	2.5
6Q7G	Det.-Aud.	6.0	130	-	-	-	-	7.5
6N6G	Output	6.0	225	-	-	-	245	-
6X5G	Rectifier	6.0	-	-	-	-	-	255

Readings taken from tube socket contacts to ground with a 1000 ohm per volt voltmeter and sensitivity control in the "Distance" position.

Date: 3-7-38

©John F. Rider, Publisher

UNITED MOTORS SERVICE

MODEL 983569 Pontiac
Schematic, Vibrator
Condenser Data

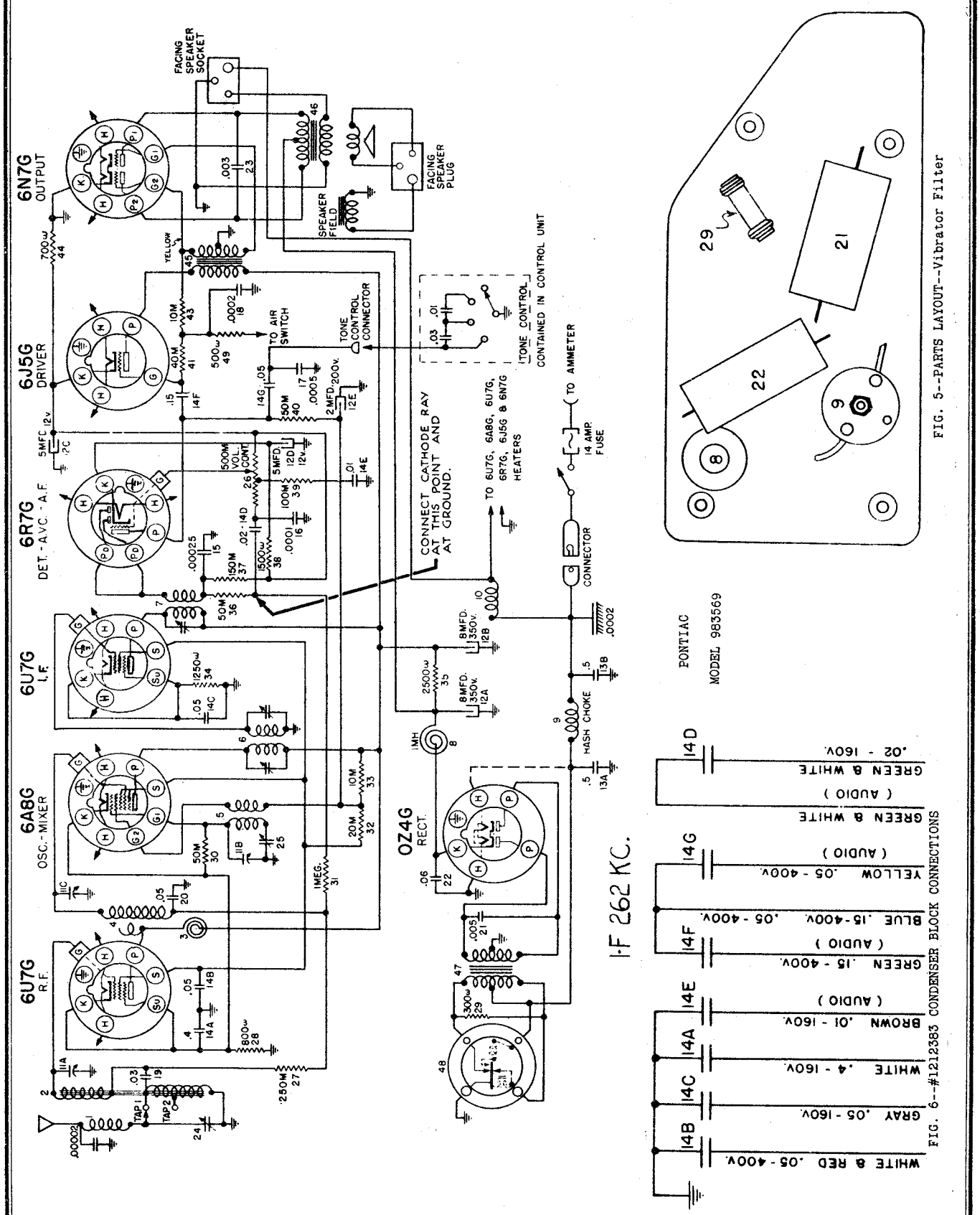

FIG. 5--PARTS LAYOUT--Vibrator Filter

PONTIAC
MODEL 983569

FIG. 6--#1212383 CONDENSER BLOCK CONNECTIONS

©John F. Rider, Publisher

MODEL 983569 Pontiac
Socket, Trimmers
Chassis

UNITED MOTORS SERVICE

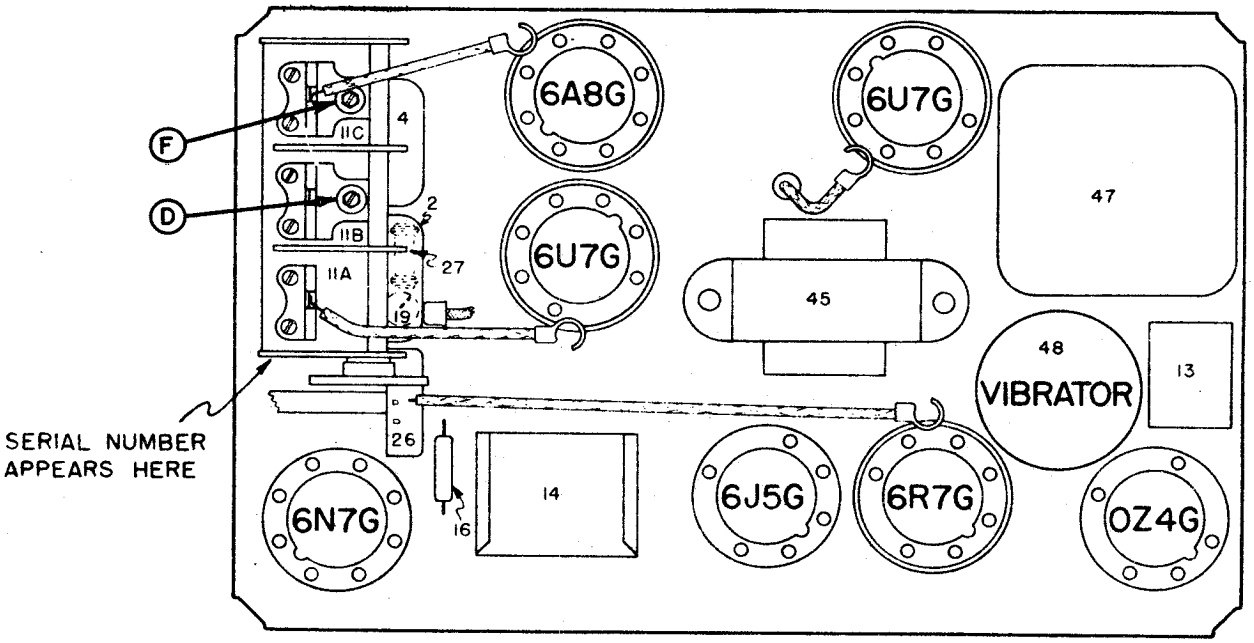

FIG. 3--PARTS LAYOUT--Top View

Pontiac 983569

Date: 10-11-37

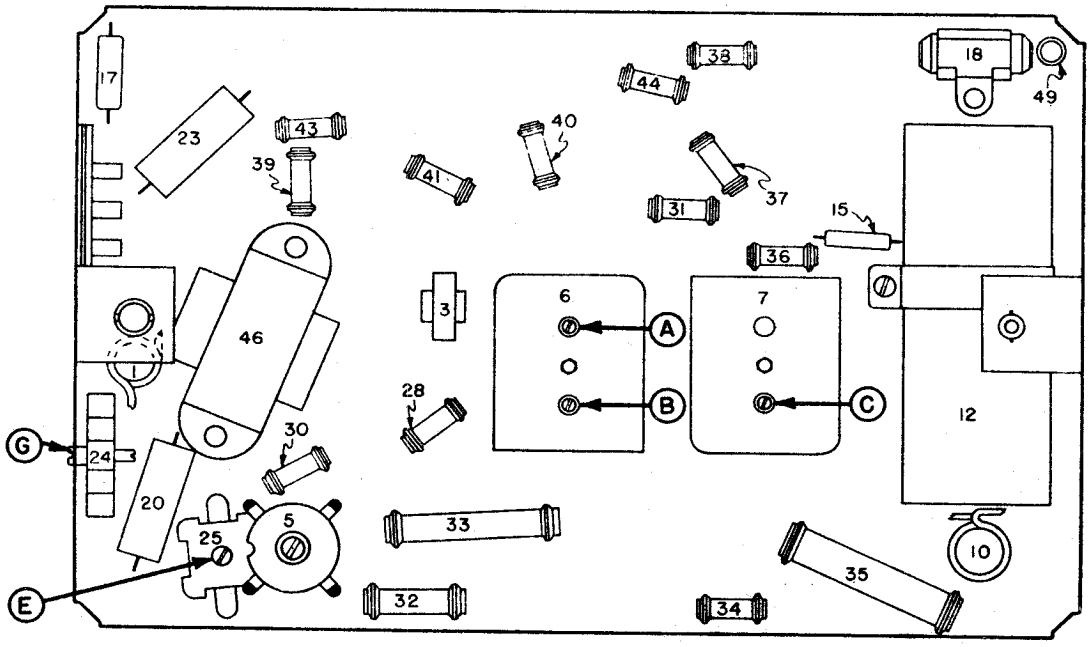

FIG. 4--PARTS LAYOUT--Bottom View

©John F. Rider, Publisher

UNITED MOTORS SERVICE

MODEL 985252 Chevrolet
Schematic, Socket
Trimmers, Chassis

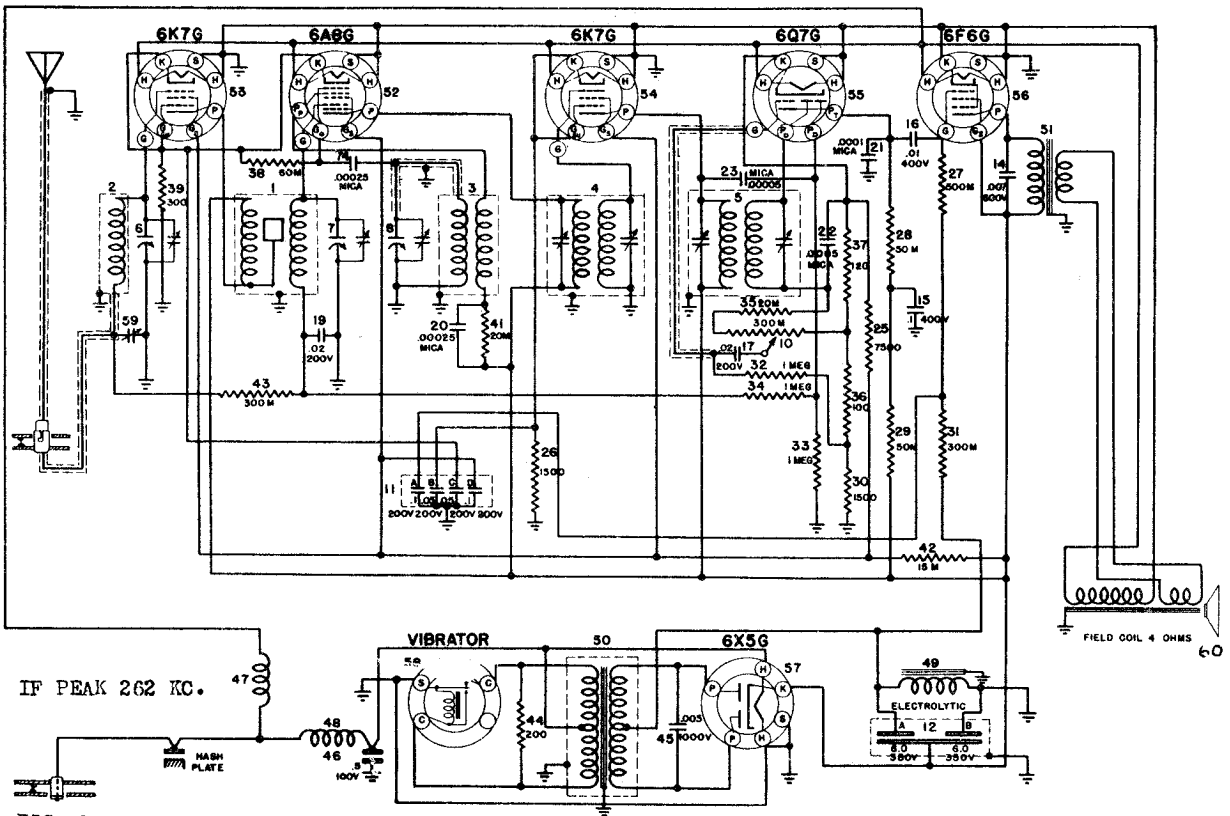

FIG. 1--CHEVROLET MODEL 9852 2 CIRCUIT DIAGRAM

GENERAL: The Chevrolet Model 985252 is a six tube, single unit auto radio with an under panel mounting tuning control. All of the receiver tubes are octal base types and a separate rectifier tube (6X5G) is employed in the power supply.

Date: 12-2-36

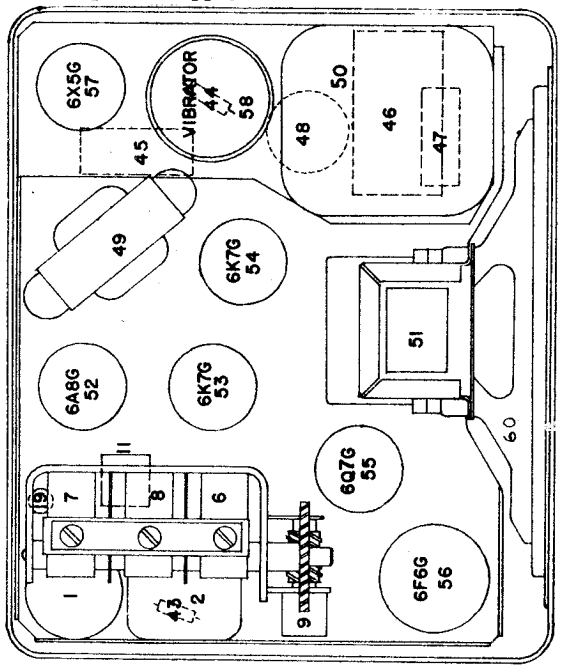

FIG. 2--PARTS LAYOUT--Top View

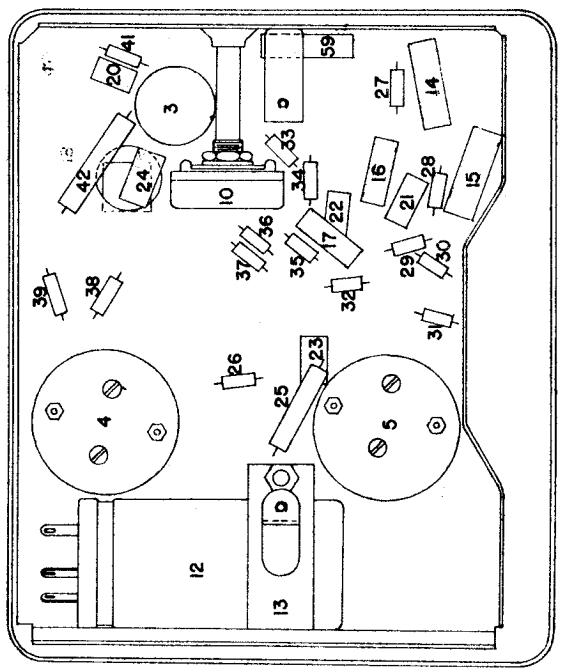

FIG. 3--PARTS LAYOUT--Bottom View

©John F. Rider, Publisher

MODEL 985252 Chevrolet
Alignment, Voltage

UNITED MOTORS SERVICE

CIRCUIT ALIGNMENT

If realignment is found to be necessary, the circuits can be adjusted only with the use of a calibrated test oscillator or signal generator, and an output meter.

Peaking I-F Stages at 262 Kilocycles (1)

(a) Connect the signal lead of the test oscillator to the grid cap of the 6A8G Oscillator Tube through a .1 mfd. condenser, leaving the tube's grid clip in place. Connect the ground lead of the test oscillator to the chassis frame.

(b) Connect the output meter from the plate prong of the 6F6G to ground. Care should be taken when connecting the output meter to insert a series condenser to protect the meter from D.C. voltages.

(c) Set the test oscillator to exactly 262 K.C.

(d) Adjust the trimmers on the I-F coils (Illus. 4 & 5) for maximum output. These adjustments should be repeated several times and during alignment the test oscillator output should be kept to as low a value as is consistent with obtaining a readable indication on the output meter.

Aligning at 1560 Kilocycles (2)

(a) Leave the test oscillator leads connected the same as for aligning the I-F stages.

(b) Turn the rotor plates of the condenser gang all the way out and against the high frequency stop.

(c) Set the test oscillator to exactly 1560 K.C.

(d) Adjust the parallel trimmer for the oscillator section (middle) of the condenser gang (Illus. #8) for maximum output.

NOTE: It is very important that this frequency be set accurately as a slight mis-setting will cause the set to be out of track over the entire high frequency end of the dial.

Aligning at 1400 Kilocycles (3)

(a) Remove the signal lead of the test oscillator from the grid of the 6A8G Oscillator Tube and connect to the Antenna terminal of the receiver through a .0002 mfd. mica condenser.

(b) Set the test oscillator to 1400 K.C.

(c) Turn the condenser rotor plates until this frequency (1400 K.C.) is tuned in with maximum output.

(d) Adjust the R-F and Antenna parallel trimmer on the condenser gang (Illus. 6 & 7) for maximum output.

TUBE SOCKET VOLTAGES

Reading taken from tube socket contacts to ground, with a 1000 ohm per volt voltmeter.

Tube	Function	H	P	S	G	GO	PO	K
6K7	R-F	6.0	205	70	0	--	--	3.0
6A8G	Mod.-Osc.	6.0	205	70	0	8.0	135	3.0
6K7G	I-F	6.0	215	70	0	--	--	4.0
6Q7G	Det. A-F	6.0	140	--	0	--	--	14.5
6F6G	Output	6.0	205	215	16.5	--	--	--

Chevrolet 985252 Date: 12-2-36

©John F. Rider, Publisher

UNITED MOTORS SERVICE

MODEL 985253 Chevrolet
Schematic, Voltage
Socket, Trimmer, Chassis

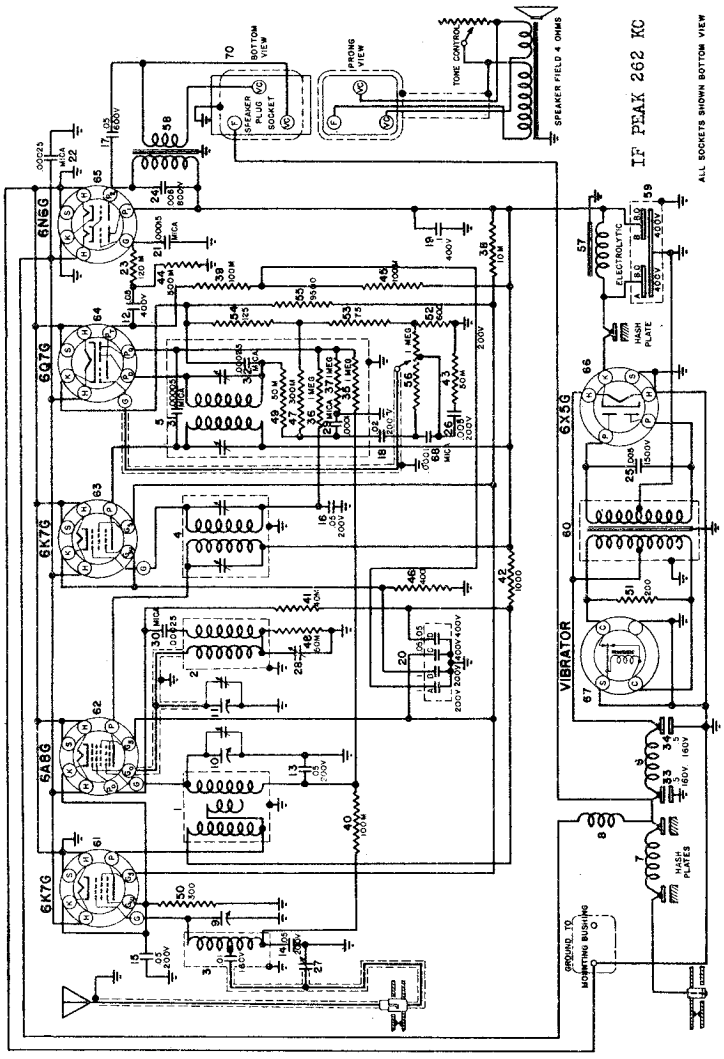

GENERAL: The Chevrolet Model 985253 is a six tube auto radio with a header type speaker, bass compensation, octal base tubes, and a tube type rectifier in the power supply.

TUBE SOCKET VOLTAGES

Tube	Function	H	P	S	GO	PO	K
6K7G	R-F Amp.	6.0	240	100	-		4.3
6A8G	Mod.-Osc.	6.0	250	100	-15	125	4.3
6K7G	I-F	6.0	250	100	-		3.3
6Q7G	Det.-Audio	6.0	135	-	-		8.3
6N6G	Output	6.0	237	250	-		0

Readings taken with a D.C. voltmeter having a resistance of 1000 ohms per volt.

Chevrolet 985253

Date: 12-7-36

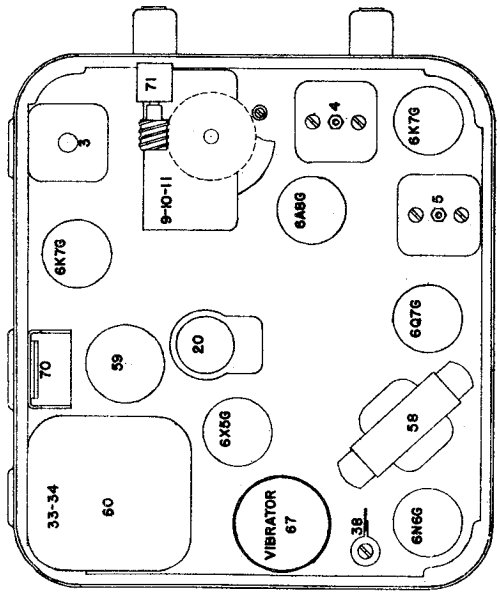

FIG. 2--PARTS LAYOUT--Top View

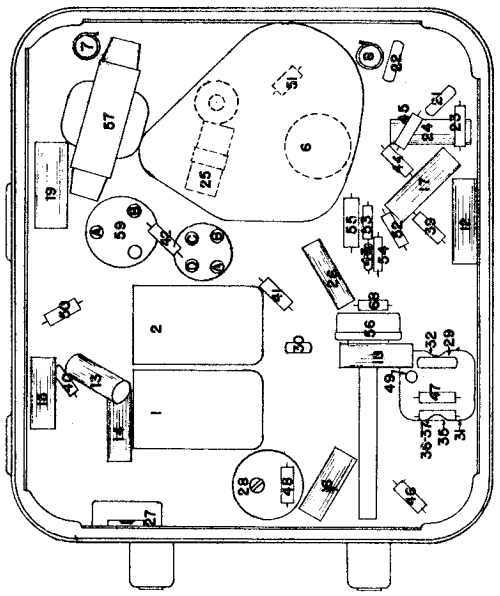

FIG. 3--PARTS LAYOUT--Bottom View

©John F. Rider, Publisher

MODEL 985253 Chevrolet
Alignment

UNITED MOTORS SERVICE

CHEVROLET MODEL 985253 CIRCUIT ALIGNMENT Date: 12-7-36

1. Peaking I-F Stages at 262 K.C.

   (a) Connect the signal lead of the test oscillator to the grid cap of the 6A8G Modulator-Oscillator tube, through a .1 mfd. condenser. Connect the ground lead of the test oscillator to the chassis frame.

   (b) Set the Test Oscillator at 262 K.C.

   (c) Turn volume control on full and tuning condenser plates completely out of mesh.

   (d) Adjust trimmers on the I-F coils (Illus. 4 and 5) for maximum output. These adjustments should be repeated several times and during alignment the test oscillator output should be kept to as low a value as is consistent with obtaining a readable indication on the output meter.

2. Aligning at 1560 Kilocycles

   Leave the test oscillator leads connected the same as for aligning the I-F Stages. Make sure the rotor plates of the condenser are turned all the way out and against the high frequency stop. Set the test oscillator to exactly 1560 K.C. Adjust the parallel trimmer for the oscillator section (middle) of the condenser gang (Illus. #11) for maximum output.

3. Aligning at 1400 Kilocycles

   Remove the signal lead of the test oscillator from the grid of the 6A8G Tube and connect to the antenna terminal of the receiver THROUGH A .0002 MFD. MICA CONDENSER. Set the test oscillator to 1400 K.C. Turn the condenser plates until this frequency is tuned in with maximum output. Adjust the R-F parallel trimmers on the condenser gang (Top section) for maximum output. Adjust the antenna compensating condenser (Illus. #27) for maximum output.

4. Aligning at 600 Kilocycles

   Set the test oscillator on 600 K.C. and turn the condenser plates until this signal is tuned in with maximum output (at approximately 600 K.C. position of plates). Maintain a low test oscillator signal and adjust the oscillator tracking condenser (Illus. #28) while rocking the condenser gang plates back and forth through the signal. This operation should be continued until no further increase in output can be obtained.

5. Realigning at 1400 Kilocycles

   Recheck alignment of the R-F section of the condenser gang and antenna compensating (Illus. #27) at 1400 K.C. as given in paragraph #3.

©John F. Rider, Publisher

UNITED MOTORS SERVICE

MODEL 985255 Chevrolet
Schematic, Voltage
Socket, Trimmers, Chassis

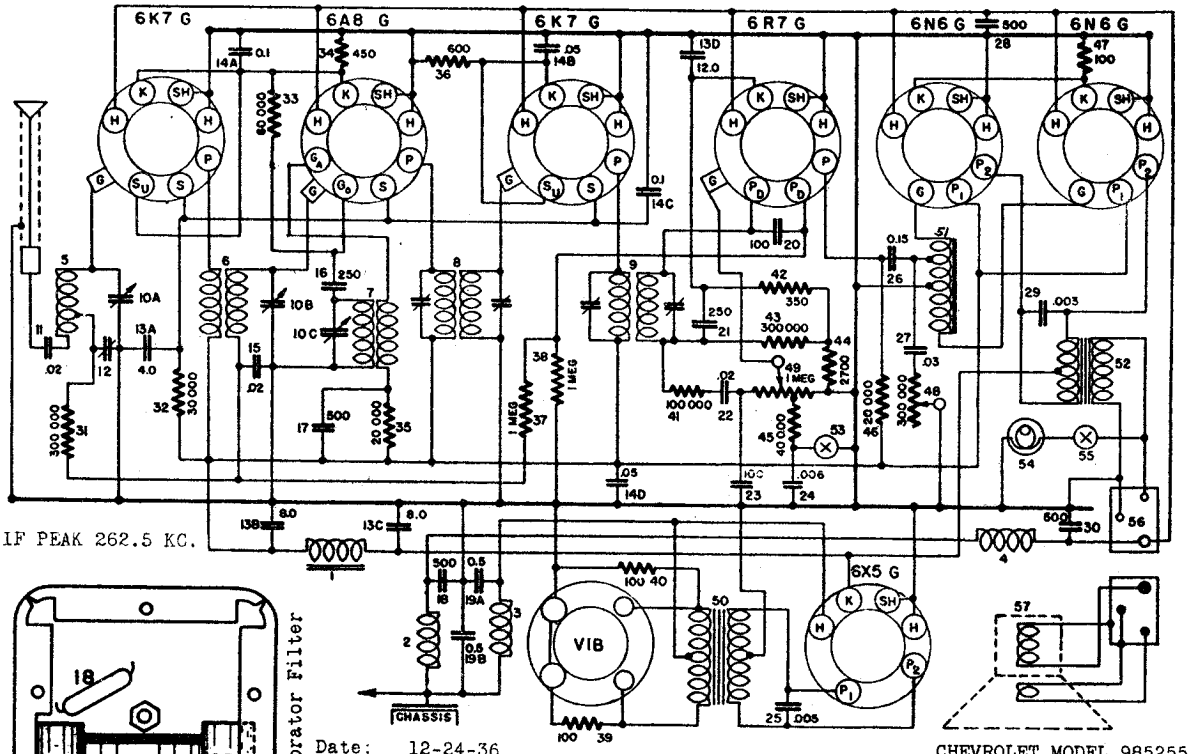

IF PEAK 262.5 KC.

CHEVROLET MODEL 985255

Date: 12-24-36

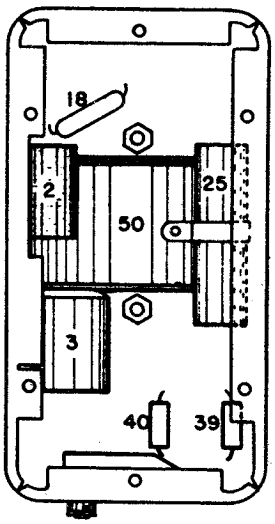

FIG. 1--PARTS LAYOUT--Vibrator Filter

TUBE SOCKET VOLTAGES

Tube	Function	H	P	P2	S	Su	Ga	Go	K
6K7G	R-F Amp.	6.0	235	-	100	5.5	-	-	5.5
6A8G	Osc.-Mod.	6.0	235	-	100	-	135	18	5.5
6K7G	I-F Amp.	6.0	235	-	100	3.6	-	-	3.6
6R7G	Det.-A-F	6.0	170	-	-	-	-	-	7.5
*6N6G	Output	6.0	240	235	-	-	-	-	5.0
6X5G	Rectifier	6.0	-	-	-	-	-	-	

Readings taken with a D.C. voltmeter having a resistance of 1000 ohms per volt.

* Same for both 6N6G tubes.

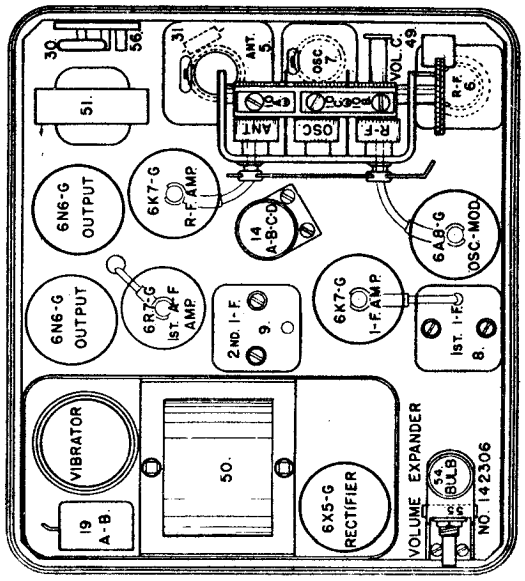

FIG. 3--PARTS LAYOUT--Top View

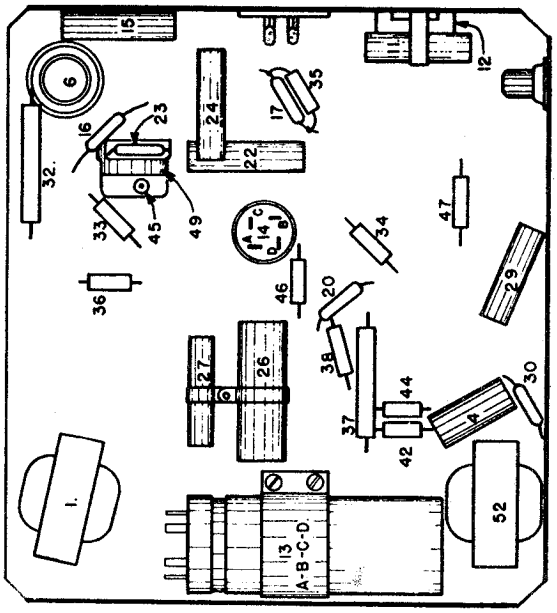

FIG. 4--PARTS LAYOUT--Bottom View

©John F. Rider, Publisher

MODEL 985255 Chevrolet
Alignment,Note

UNITED MOTORS SERVICE

CIRCUIT ALIGNMENT

Aligning I-F Stages at 262.5 Kilocycles

Chevrolet 985255

(a) Connect the signal lead of the test oscillator to the grid cap of the 6K7G I-F Amplifier tube, through a .1 mfd. condenser, leaving the tube's grid clip in place. Connect the ground lead of the test oscillator to the chassis frame.

(b) Connect the output meter from the plate (P2) of one of the 6N6G Output tubes to the plate (P2) of the other 6N6G Output tube.

(c) Set the test oscillator carefully to 262.5 K.C.

(d) Turn the "Volume Expander" switch on the receiver to the "Off" position. Turn the volume control on full and turn the condenser gang plates so that they are completely in mesh. Leave the "Fidelity Control" Cable disconnected from the chassis.

Aligning I-F Stages at 262.5 Kilocycles--Cont'd.

(e) Adjust both trimmers located on the 2nd I-F coil (Illus. #9) for maximum output.

(f) Connect the signal lead of the test oscillator to the grid cap of the 6A8G Oscillator-Modulator tube, leaving the tube's grid clip in place.

(g) Adjust both trimmers located on the 1st I-F coil (Illus. #8) for maximum output.

NOTE: DO NOT READJUST THE TRIMMERS ON THE 2ND I-F COIL, ILLUS. #9.

Aligning at 1550 Kilocycles

Leave the test oscillator signal lead connected to the grid cap of the 6A8G tube. Turn the condenser rotor plates all the way out and against the high frequency stop. Set the test oscillator to exactly 1550 K.C. Adjust the parallel trimmer for the oscillator section (middle) of the condenser gang (Illus. #10C) carefully for maximum output.

Aligning at 1400 Kilocycles

Remove the signal lead of the test oscillator from the grid of the 6A8G tube and connect to the antenna terminal of the receiver THROUGH a .0002 MFD. MICA CONDENSER. Set the test oscillator to 1400 K.C. Turn the condenser plates until this frequency is tuned in with maximum output. Adjust the "R-F" and "ANT." sections of the condenser gang (Illus. #10) carefully for maximum output.

Adjusting Antenna Compensating Condenser

Leave the test oscillator leads connected the same as before. Set the test oscillator to 600 kilocycles. Tune in the 600 K.C. signal with the station selector for maximum output. Adjust the antenna compensating condenser (Illus. #12) while rocking the tuning condenser setting back and forth through the signal, until no further improvement in output can be obtained. Recheck the alignment of the "ANT" section of the condenser gang as given in paragraph #3.

GENERAL: The Chevrolet Model 985255 is a seven tube, dash speaker auto radio with an instrument panel tuning control, volume expander, "Music-Speech" and Audio Fidelity controls.

Date: 12-24-36

Automatic Volume Expansion: A new feature in automotive radio design is automatic volume expansion, made possible by the use of an "expander tube" connected across the voice coil of the speaker. The resistance of this tube varies with current, so as to increase the volume of loud tones, thus giving a wider volume range to reproduced music.

©John F. Rider, Publisher

UNITED MOTORS SERVICE

MODEL 985283 Chevrolet
Schematic

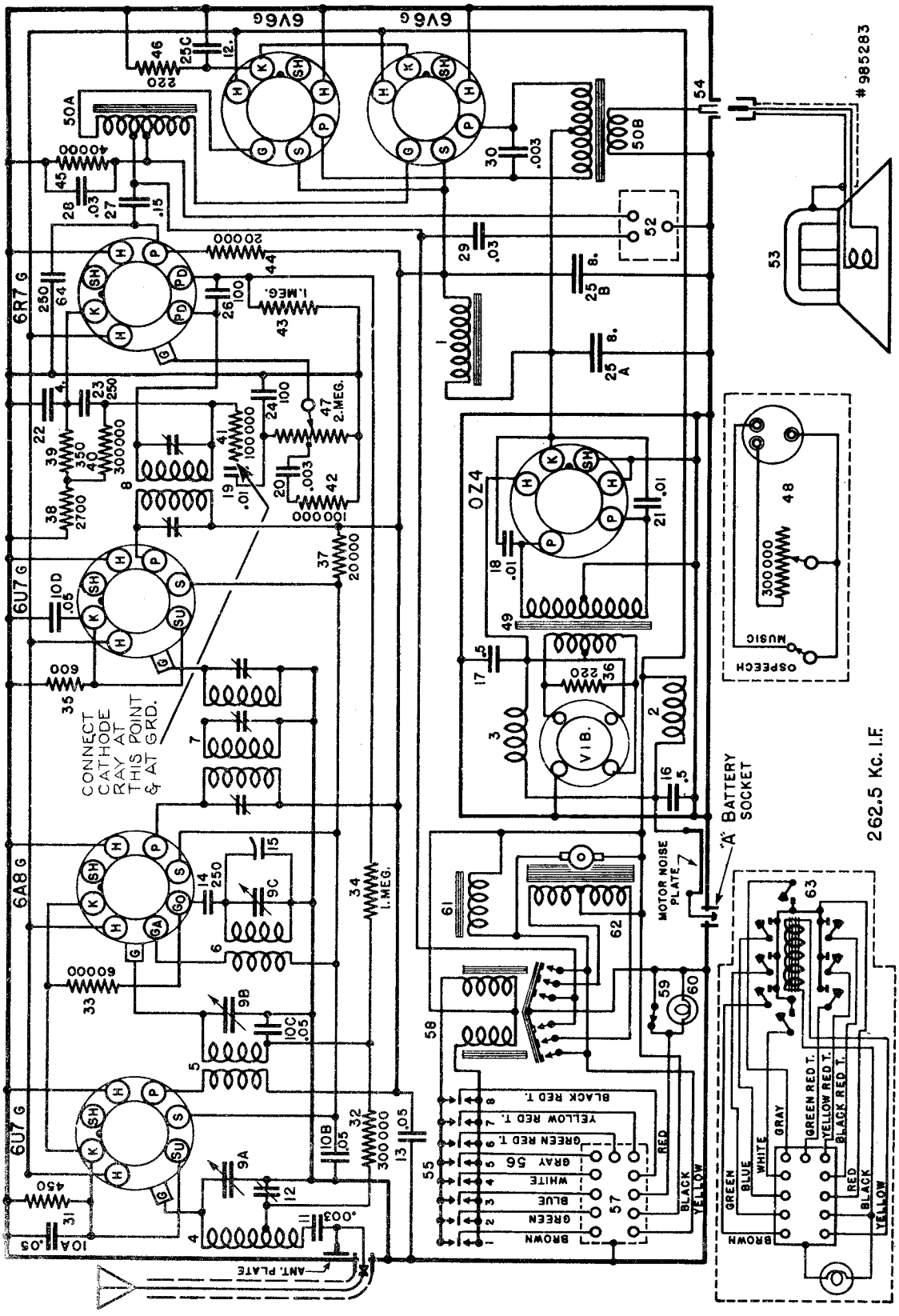

FIG. 3--CHEVROLET MODEL 985283 CIRCUIT DIAGRAM

©John F. Rider, Publisher

MODEL 985283 Chevrolet
Socket,Trimmers,Chassis
Voltage,Tuner Assembly

UNITED MOTORS SERVICE

Chevrolet 985283 Date: 12-13-37

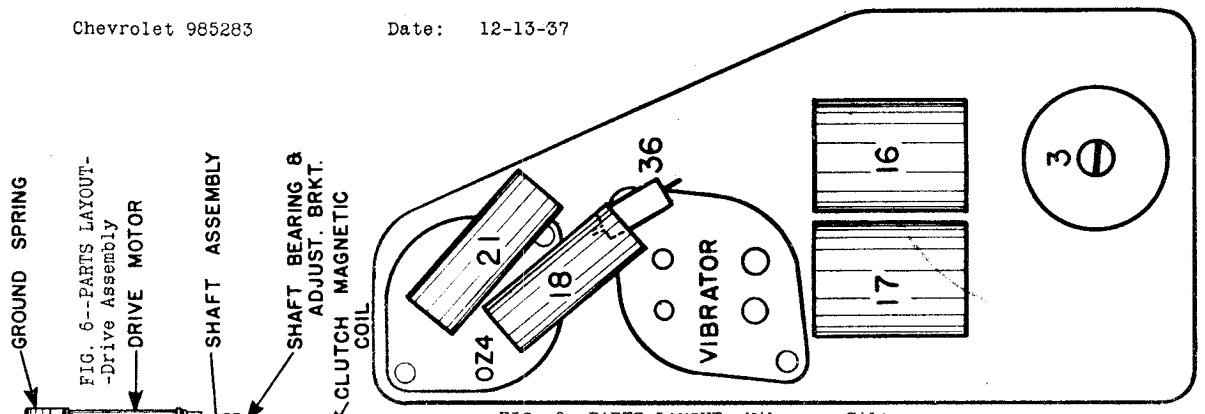

FIG. 2--PARTS LAYOUT--Vibrator Filter

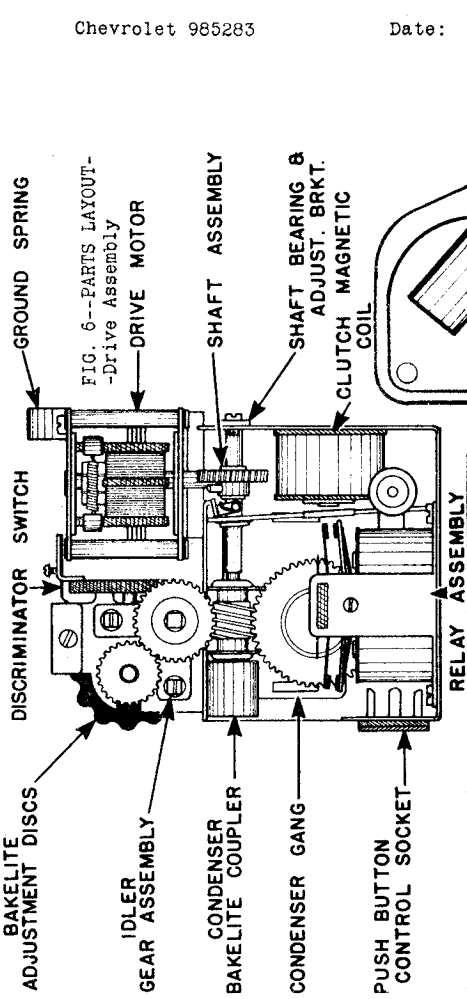

FIG. 6--PARTS LAYOUT--Drive Assembly

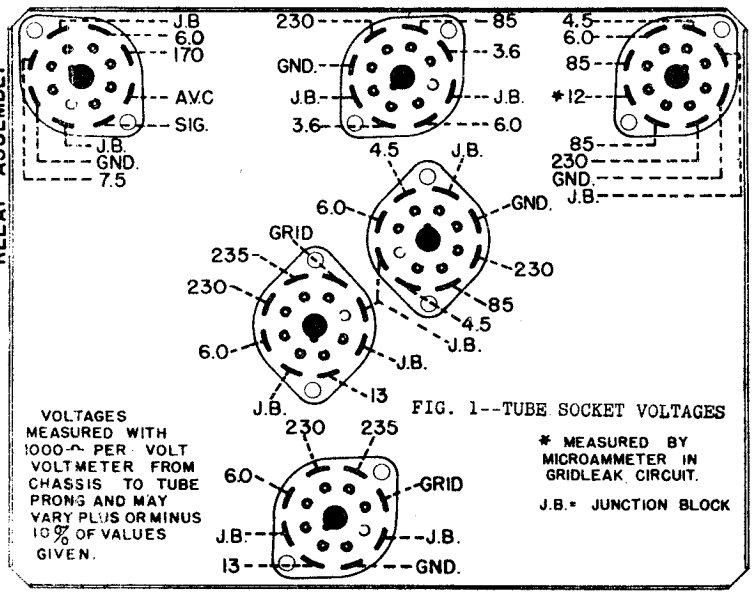

FIG. 1--TUBE SOCKET VOLTAGES

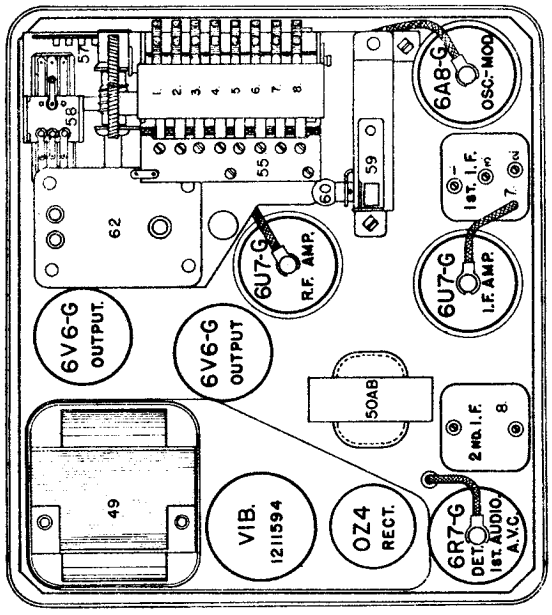

FIG. 4--PARTS LAYOUT--Top View

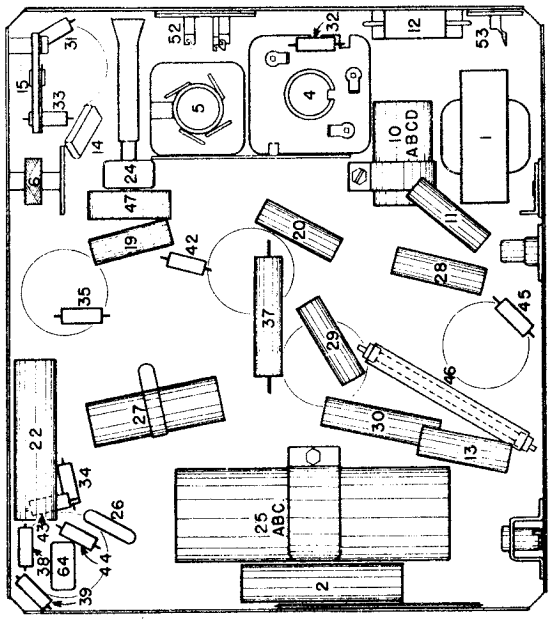

FIG. 5--PARTS LAYOUT--Bottom View

©John F. Rider, Publisher

UNITED MOTORS SERVICE

MODEL 985284 Chevrolet
Schematic, Socket, Chassis
Trimmers, Voltage

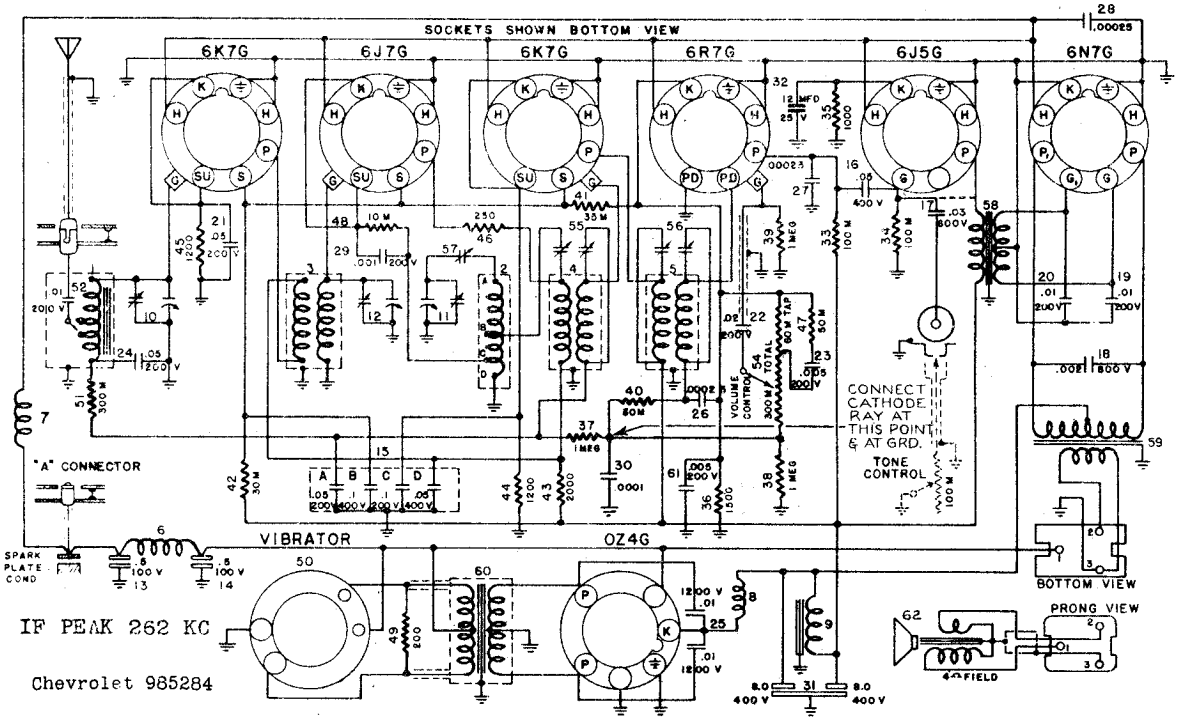

FIG. 2--CHEVROLET MODEL 985284 CIRCUIT DIAGRAM

TUBE SOCKET VOLTAGES

TUBE	H	P	S	Su	K	Pl	G	
6K7G (RF)	6.0	222	89	11.8	11.8	--	---	VOLTAGE READINGS BETWEEN SOCKET TER-
6J7G	6.0	222	89	4.5	4.5	--	---	MINALS & GROUND WITH A D.C. VOLTMETER
6K7G (IF)	6.0	238	89	7.5	7.5	--	---	HAVING A RESISTANCE OF 1000 OHMS/VOLT
6R7G	6.0	118	--	---	5.8	--	---	CURRENT DRAIN 6 AMPS. WITHOUT DIAL LIGHT
6J5G	6.0	230	--	---	7.6	--	---	OR SPEAKER .CURRENT DRAIN 7.7 AMPS. WITH
6N7G	6.0	250	--	---	---	250	---	DIAL LIGHT AND SPEAKER "B" SUPPLY DRAIN
0Z4G	---	---	--	---	---	---	260	APPROX. 58 M.A.

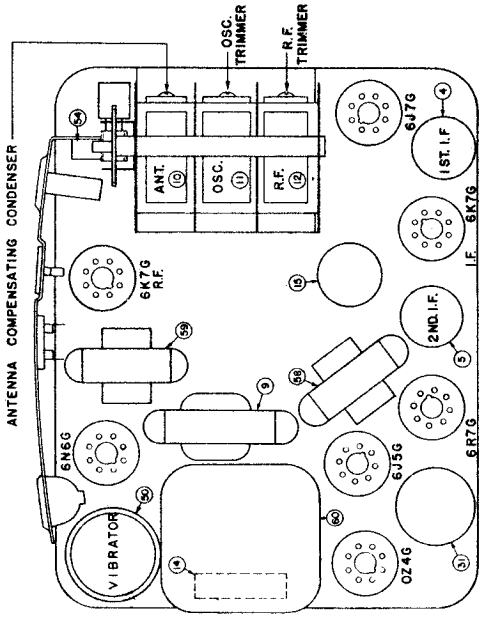

FIG. 3--PARTS LAYOUT--Top View

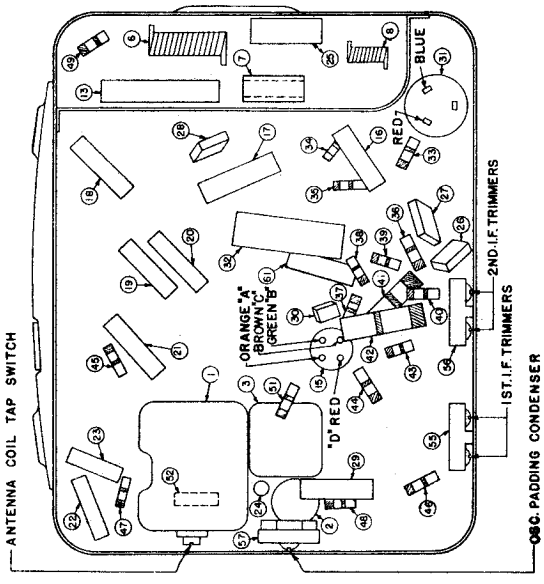

FIG. 4--PARTS LAYOUT--Bottom View

©John F. Rider, Publisher

MODEL 985285 Chevrolet
Schematic, Socket, Chassis
Trimmers, Condenser

UNITED MOTORS SERVICE

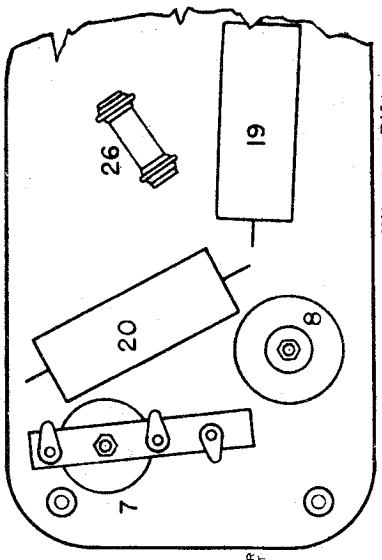

FIG. 6--PARTS LAYOUT--Vibrator Filter

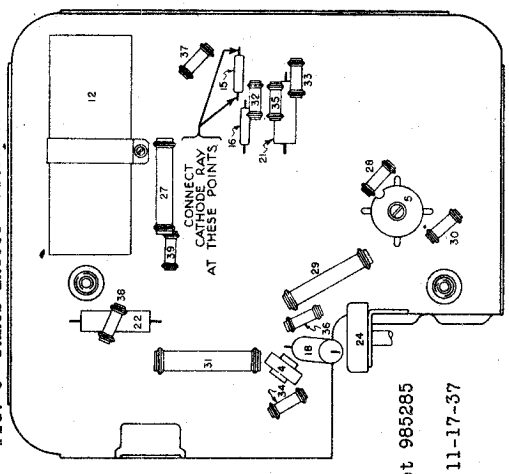

Chevrolet 985285

Date: 11-17-37

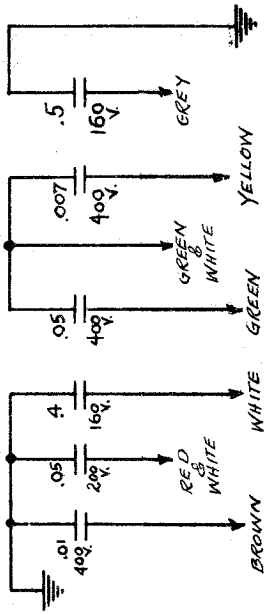

FIG. 4--PARTS LAYOUT--Bottom View

FIG. 7--#1212544 CONDENSER BLOCK CONNECTIONS

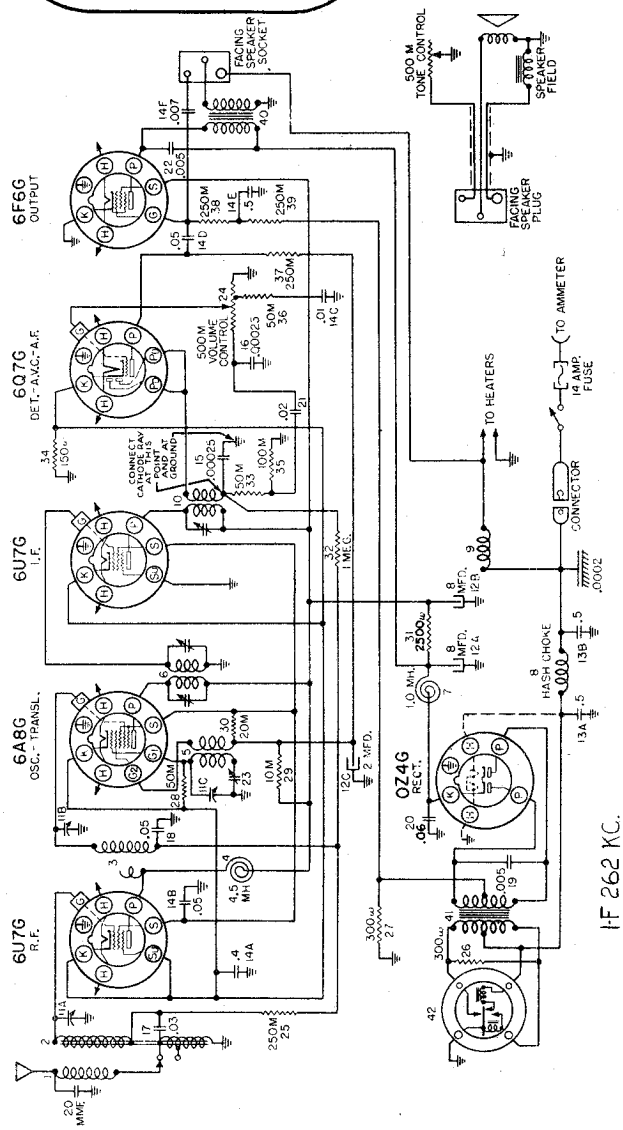

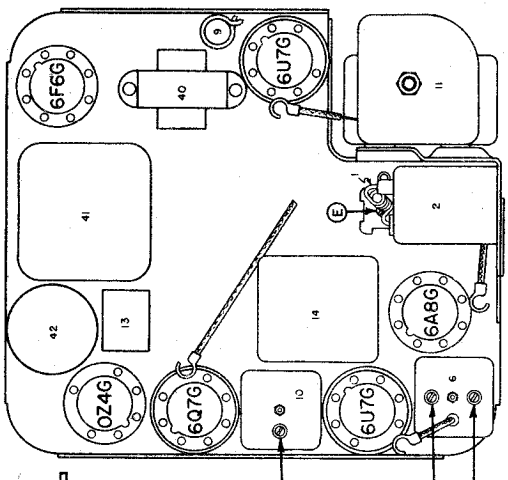

FIG. 3--PARTS LAYOUT--Top View

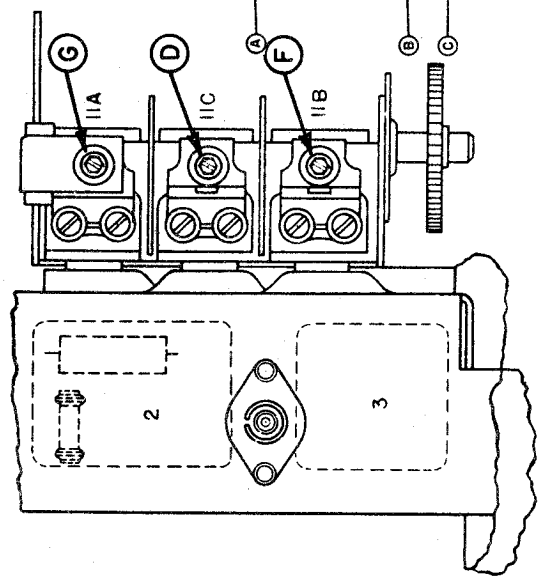

FIG. 5--PARTS LAYOUT--Side View

©John F. Rider, Publisher

UNITED MOTORS SERVICE

MODEL 7232553(983570)
Pontiac
Schematic, Voltage
Trimmers

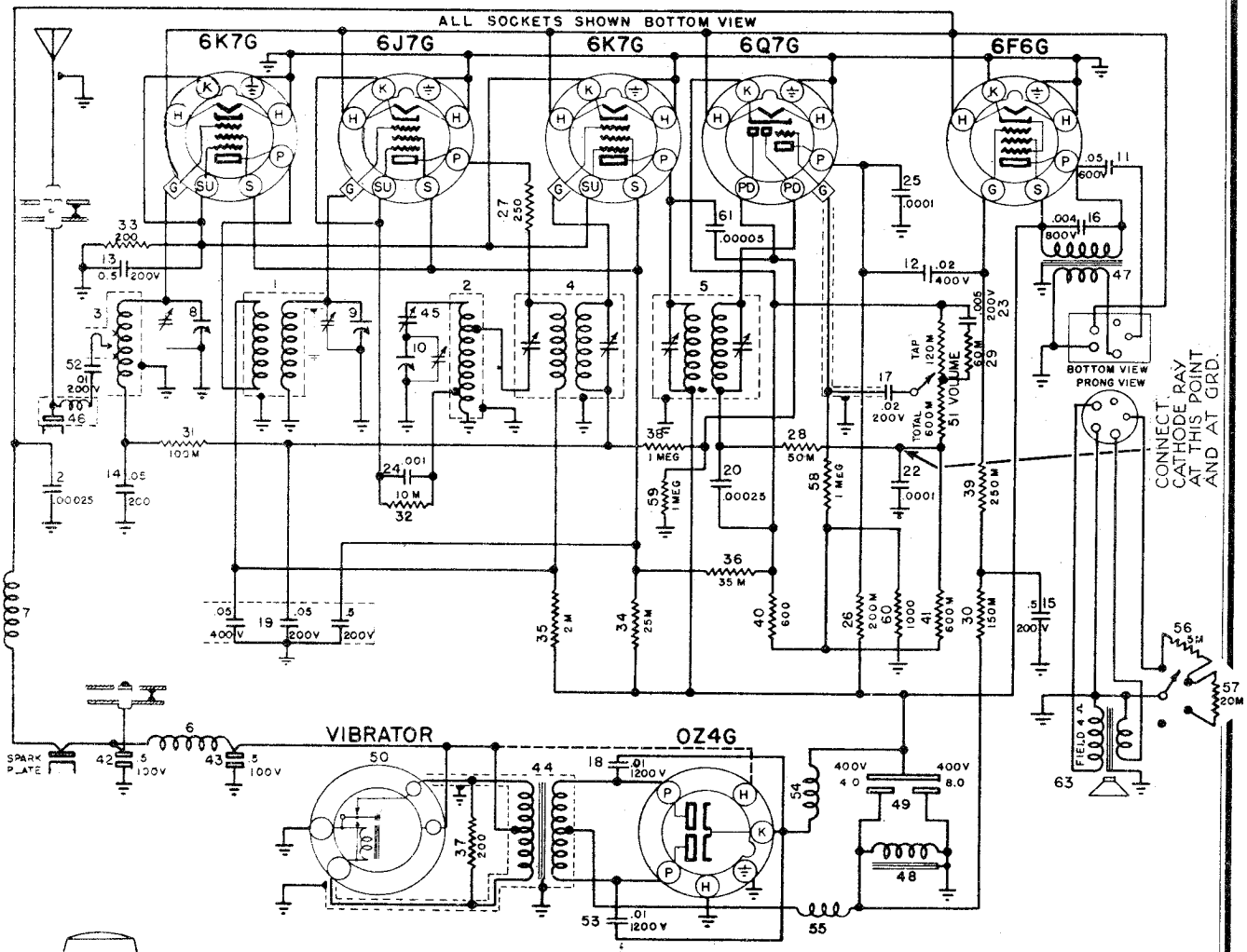

FIG. 2--PONTIAC MODEL 7232553 (983570) CIRCUIT DIAGRAM

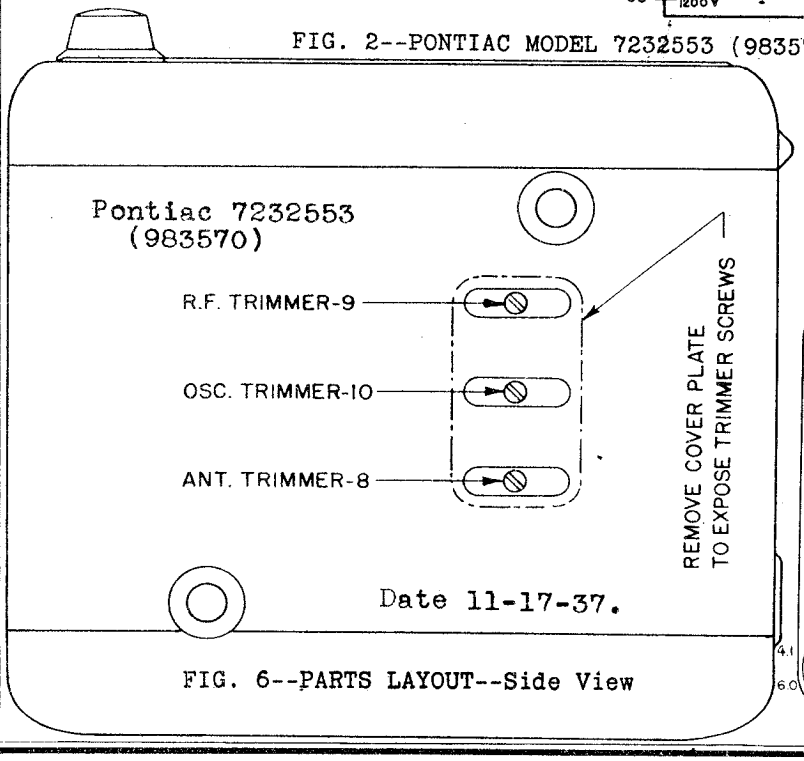

FIG. 6--PARTS LAYOUT--Side View

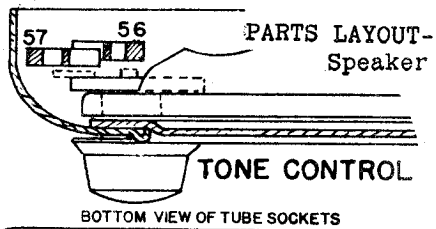

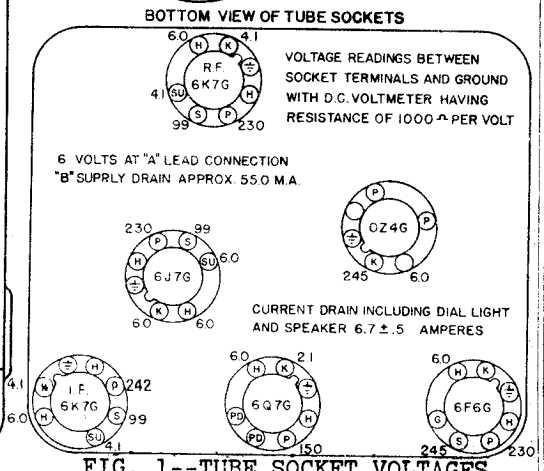

FIG. 1--TUBE SOCKET VOLTAGES

©John F. Rider, Publisher

MODEL 7232553(983570)
Pontiac
Socket,Trimmers
Chassis

UNITED MOTORS SERVICE

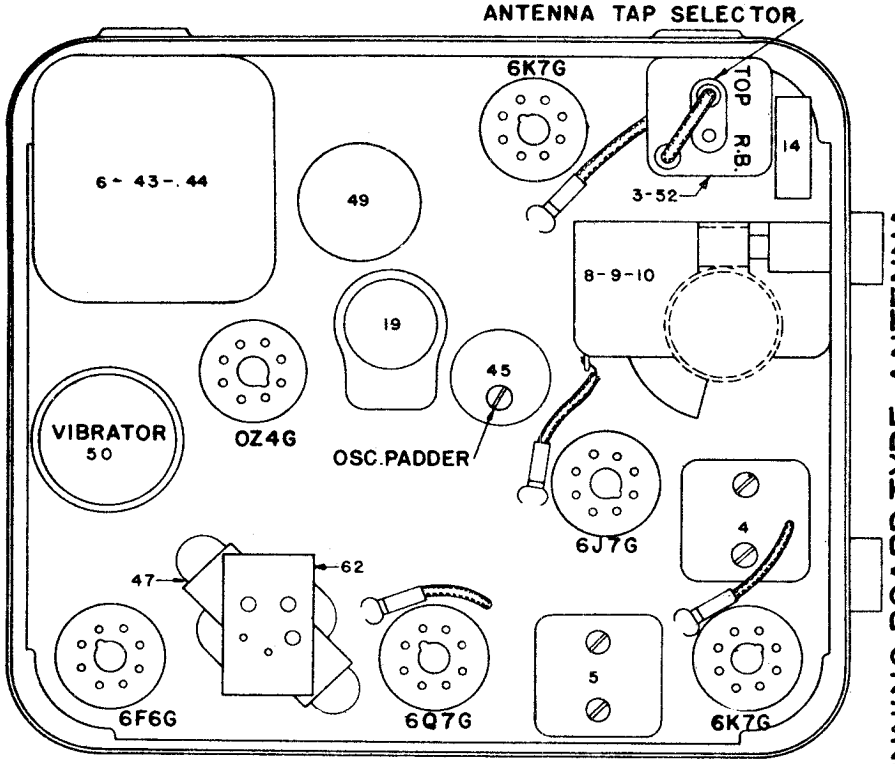

FIG. 3--PARTS LAYOUT--Top View

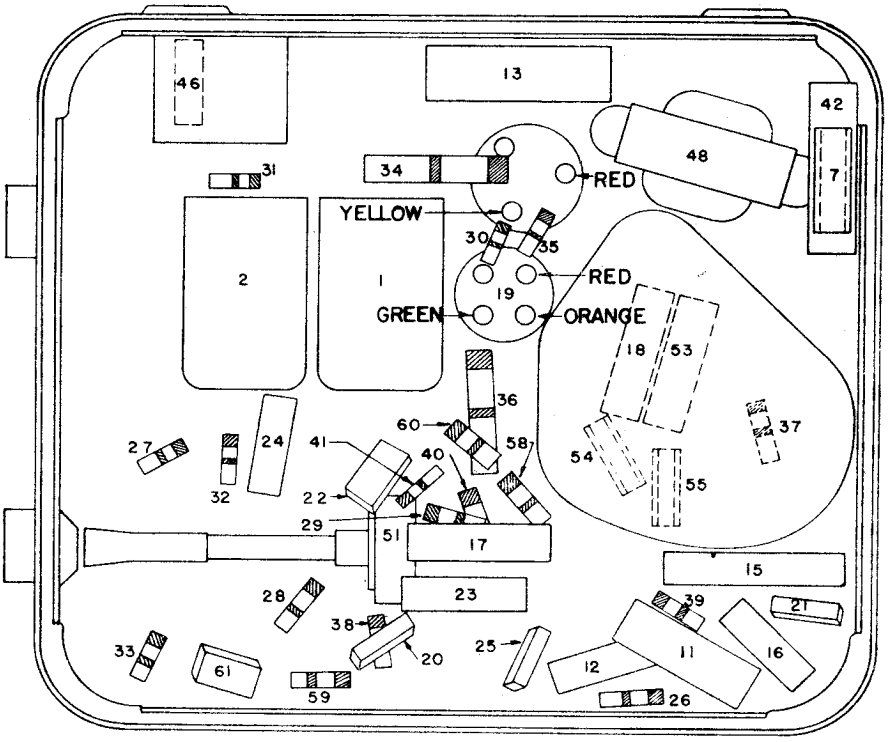

FIG. 4--PARTS LAYOUT--Bottom View

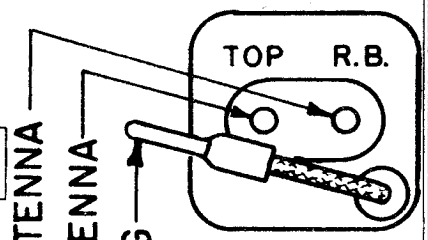

PLUG HERE WHEN USING RUNNING BOARD TYPE ANTENNA
PLUG HERE WHEN USING TURRET TOP ANTENNA
ANTENNA COIL TAP SELECTOR PLUG

TOP VIEW OF
ANTENNA COIL SHIELD

FIG. 5--ANTENNA COIL--Selector Tap

PONTIAC MODEL
7232553
(983570)

Date 11-17-37.

©John F. Rider, Publisher

THE WALGREEN CO.

MODEL 255
Schematic, Socket
Notes, Parts
MODELS 630, 635, 652
Schematic

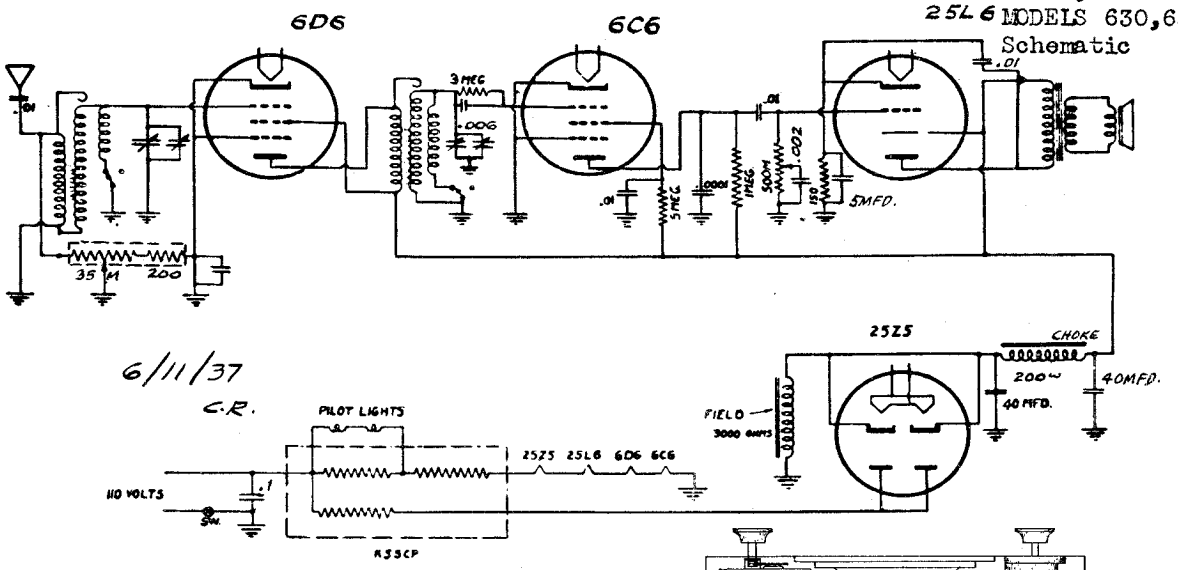

MODEL 255

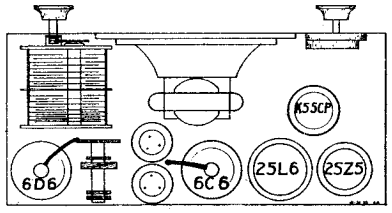

VIEW SHOWING POSITION OF TUBES

Ground

Caution: Under no circumstance should a ground connection be used, or the far end of the aerial connected to radiators, water pipes, etc.

Current Supply

Any outlet used for household purposes and having a voltage of at least 105 volts and no more than 125 volts can be used. This current can be either direct or alternating current. If in doubt about the line voltage, consult your local power company. They will be pleased to furnish the necessary information. Do not attempt to operate receiver on a current of more than 125 volts. Should the line voltage be more than 125 volts, a special line voltage reducer is available at your neighborhood Walgreen Drug Store.

Aerial

The aerial can be either indoors or outside and in most instances should be no less than 20 feet in length or more than 40 feet. The aerial is to be connected to the short green wire protruding from the rear of the cabinet. When an indoor aerial is used it may be concealed under the base board or tacked to the top of the picture moulding around the room.
Should the receiver be operated in localities where there are no local broadcast stations, a longer outside aerial will be necessary for satisfactory reception. In highly congested metropolitan districts, where most of the apartments are in tall steel reinforced concrete buildings, it will be necessary to have an outside aerial to obtain satisfactory performance. The use of so called aerial eliminator's is not advised.

PARTS

Part No.	Description	Price List
5835	Speaker	$4.50
138	Transformer—Output	1.25
577	Cone and Voice Coil Assembly	1.25
151	Field Coil	1.25
	Variable Condenser	
1633	Type A—with Gear Outside	3.00
1631	Type B—with Gear Inside	3.00
	Shaft and Pinion	
461	For Type A Variable Condenser	.60
462	For Type B Variable Condenser	.75
463	Rotor Gear For Type A Only	.50
2864	Antenna Coil	1.25
2865	Interstage Coil	1.25
2525	Filter Condenser	1.20
2426	Volume Control with Switch	1.25
4040	Dial Assembly Complete	2.50
4039	Dial Scale	.50
4112	Dial Ribbon	.40
464	Dial Pulley For Ribbon (Left)	.40
465	Dial Pulley For Ribbon (Right)	.40
4041	Dial Frame	.75
458	Dial Pulley For Variable Shaft	.40
459	Dial Gable	.15
478	Dial Window (Clear)	.25
1822	Pilot Light Socket	.25
148	Filter Choke	.75
3721	Band Switch	.50
259	Tone Control	.75
3911	Knobs	.25
	Grille Cloth	.10

PRICES SUBJECT TO CHANGE
WITHOUT NOTICE

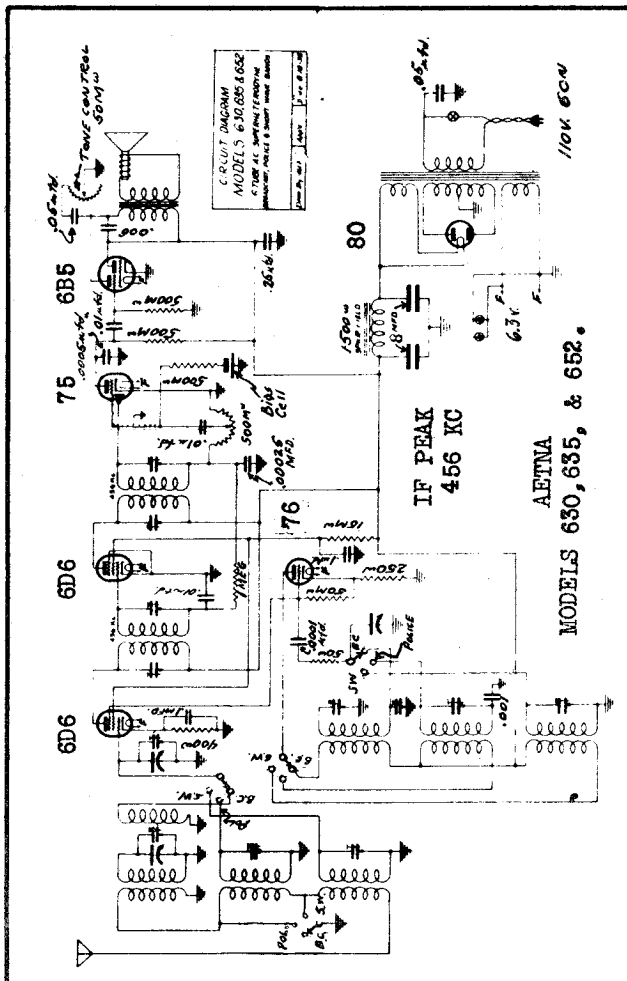

©John F. Rider, Publisher

MODEL 700
Schematic
Alignment

THE WALGREEN CO.

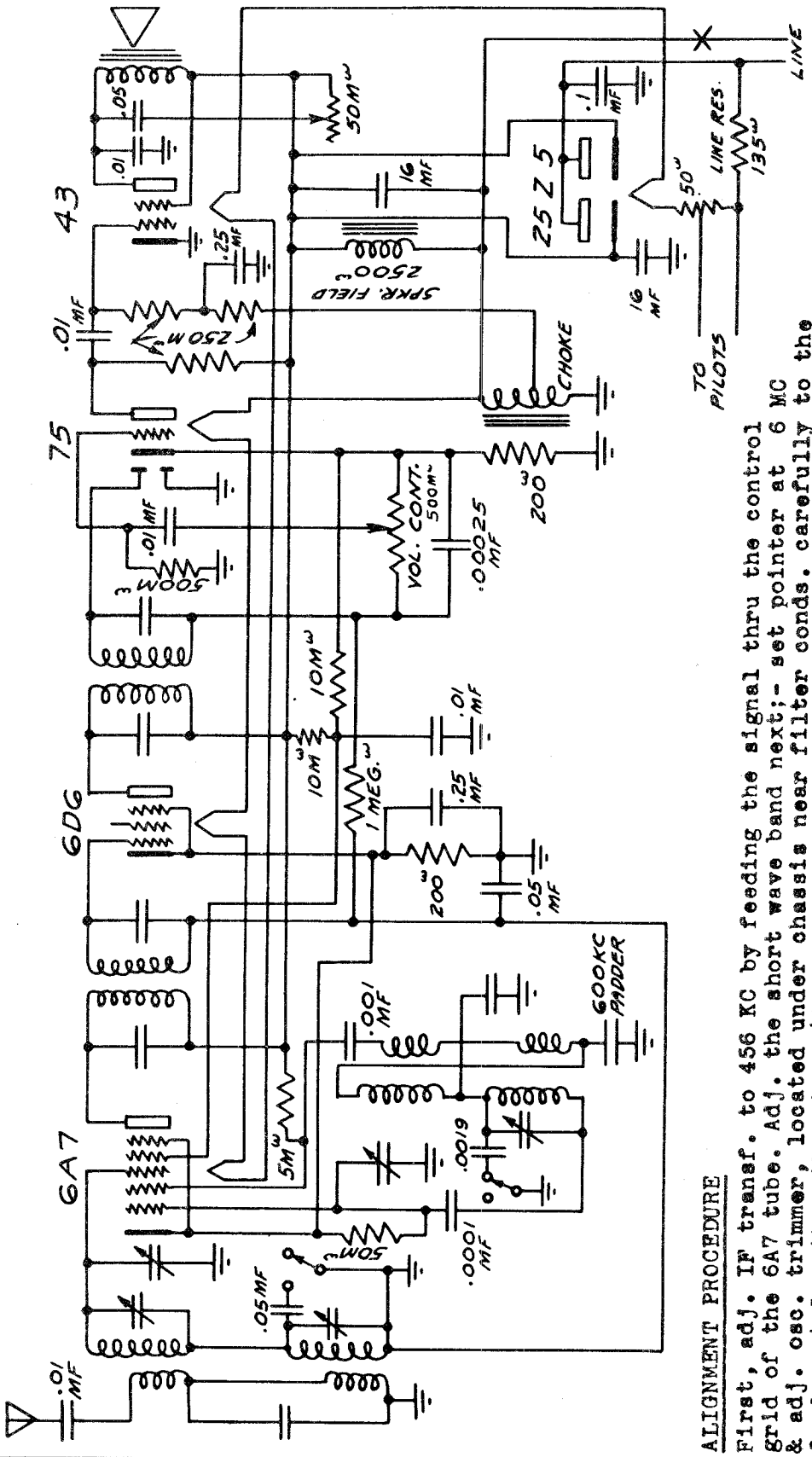

ALIGNMENT PROCEDURE

First, adj. IF transf. to 456 KC by feeding the signal thru the control grid of the 6A7 tube. Adj. the short wave band next;- set pointer at 6 MC & adj. osc. trimmer, located under chassis near filter conds. carefully to the fundamental rather than image(fund. is second peak as you adj. from max. cap.); then adj. the short wave ant. trimmer, located on top of chassis near var. cond., for max. signal; next dial across short wave band checking it at 2.5 and 4 MC to see that it does not stop oscillating. If this should occur, try changing 6A7 tubes to find one that will oscillate at 2.2 MC. If you experience any difficulty in finding a satisfactory tube, it may be necessary to use separate bias on 6A7(200 ohm res. and .1/4 mfd cond.) in order to use the tubes available.

Now, set band switch to broadcast position and adj. padder at about 600 Kc for max. gain, rocking the var. cond. with each adj. of the padder - then with gang all the way open, adj. B.C. osc. trimmer located under chassis near outer edge, to 1717 KC and set B.C. ant. trimmer located on top of chassis near outer edge, for maximum gain.

This set is designed to operate on 105-125 volts AC-DC **DO NOT CONNECT A GROUND TO THIS SET.**

©John F. Rider, Publisher

WARWICK MFG. CO.

MODEL 5 Tube A-C Superhet.
MODEL 6 Tube A-C Superhet.
Schematic, Socket, Trimmers
Alignment

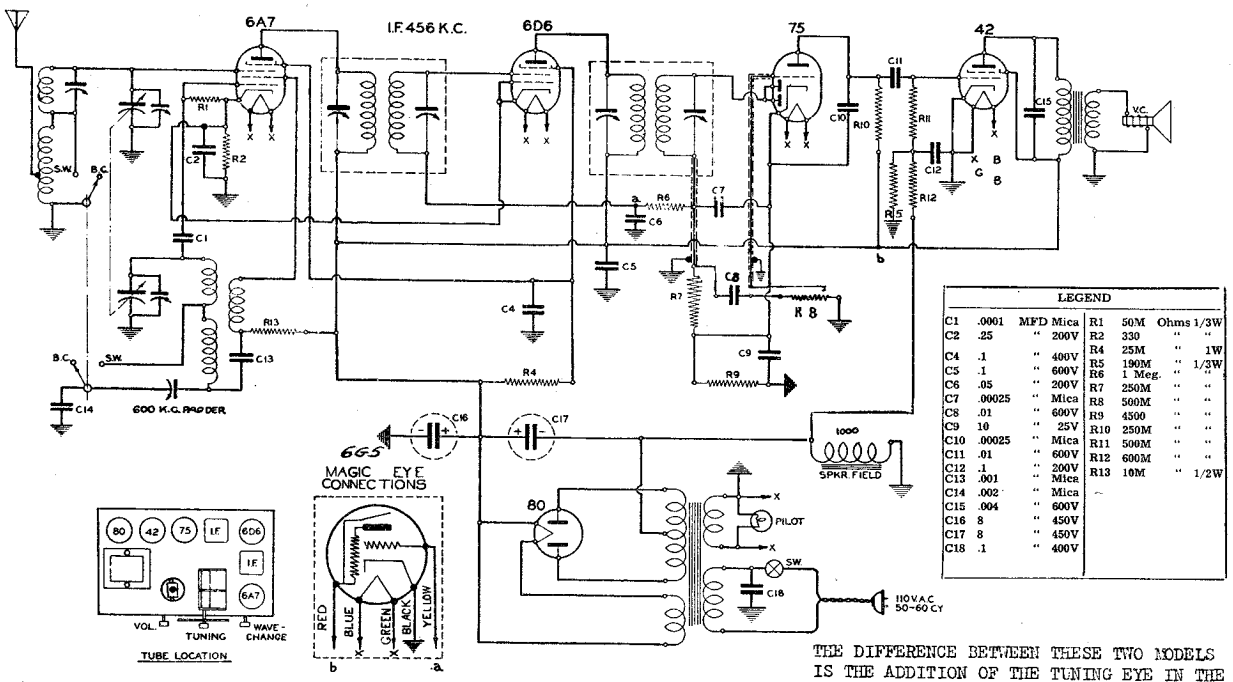

LEGEND					
C1	.0001	MFD Mica	R1	50M	Ohms 1/3W
C2	.25	" 200V	R2	330	" "
C4	.1	" 400V	R4	25M	1W
C5	.1	" 600V	R5	190M	1/3W
C6	.05	" 200V	R6	1 Meg.	" "
C7	.00025	" Mica	R7	250M	" "
C8	.01	" 600V	R8	500M	" "
C9	10	" 25V	R9	4500	" "
C10	.00025	" Mica	R10	250M	" "
C11	.01	" 600V	R11	500M	" "
C12	.1	" 200V	R12	600M	" "
C13	.001	" Mica	R13	10M	" 1/2W
C14	.002	" Mica			
C15	.004	" 600V			
C16	8	" 450V			
C17	8	" 450V			
C18	.1	" 400V			

THE DIFFERENCE BETWEEN THESE TWO MODELS IS THE ADDITION OF THE TUNING EYE IN THE 6 TUBE MODEL.

6 Tube A. C. Superheterodyne with Cathode Ray Magic Eye

A good ground connection to a water pipe or other metallic conductor entering into the ground for some distance is ESSENTIAL.

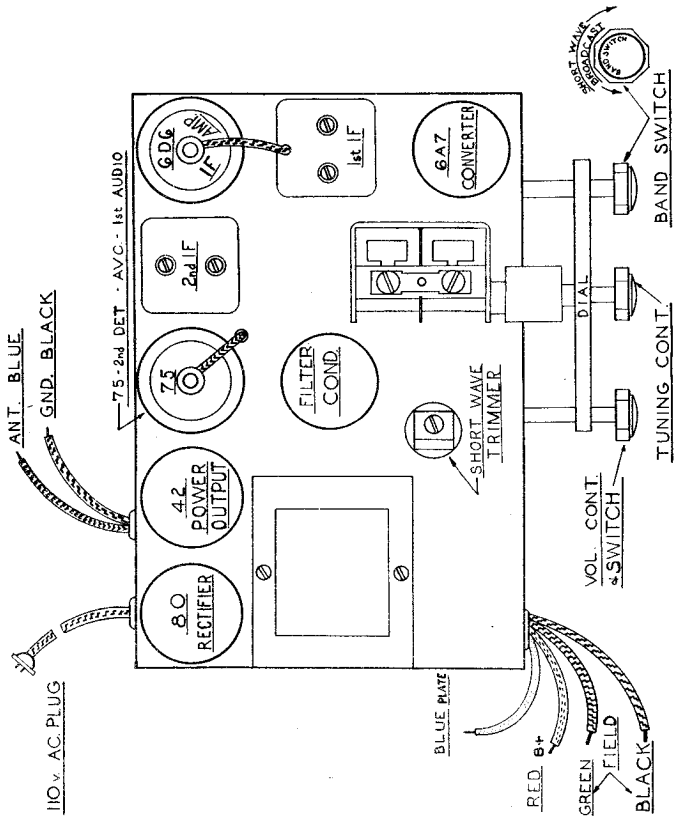

The frequency range covered by this receiver is as follows: Broadcast band 540 KC to 1700 KC. Short-wave band 2.1 megacycles to 6.4 megacycles. These ranges are selected by turning the range switch knob. Turning this knob to the left switches to the broadcast band; to the right switches to the short wave band.

I. F. Alignment:

Connect a test oscillator or signal generator through a .1 mfd. condenser to the grid of the 6A7 tube and set the oscillator to 456 KC. Use an output meter connected to the speaker if possible, to obtain the most accurate adjustments. Peak each I.F. stage to maximum response, reducing the output of the oscillator as far as possible for final adjustments.

R. F. Alignment:

With the test oscillator set to 1720 KC and connected to the antenna wire of the receiver through a .00025 mfd condenser, switch the receiver to the broadcast band and set the pointer at the end of travel on the right (at the 1700 KC end). Adjust the rear trimmer on the top of the variable condenser, for maximum gain. Then set the test oscillator at 1400 KC and tune in this signal on the receiver as though tuning a station. If an adjustment at this point is necessary on your set, you will have a trimmer condenser to adjust on top of the variable condenser at the front; this is adjusted for maximum gain.

Now adjust the test oscillator to 600 KC and tune in this signal. Adjust the padder condenser (which is adjusted through the right hand end of the chassis) in the following manner: turn the dial slowly and repeatedly back and forth across the signal while adjusting the padder. Adjust for maximum gain.

Now switch the receiver to short wave. With the test oscillator set at 6 megacycles, tune in this signal on the receiver. Then adjust the short wave trimmer (which is located on top of the coil above the chassis) for maximum gain.

©John F. Rider, Publisher

MODEL 400
Schematic, Socket
Trimmers, Alignment

WARWICK MFG. CO.

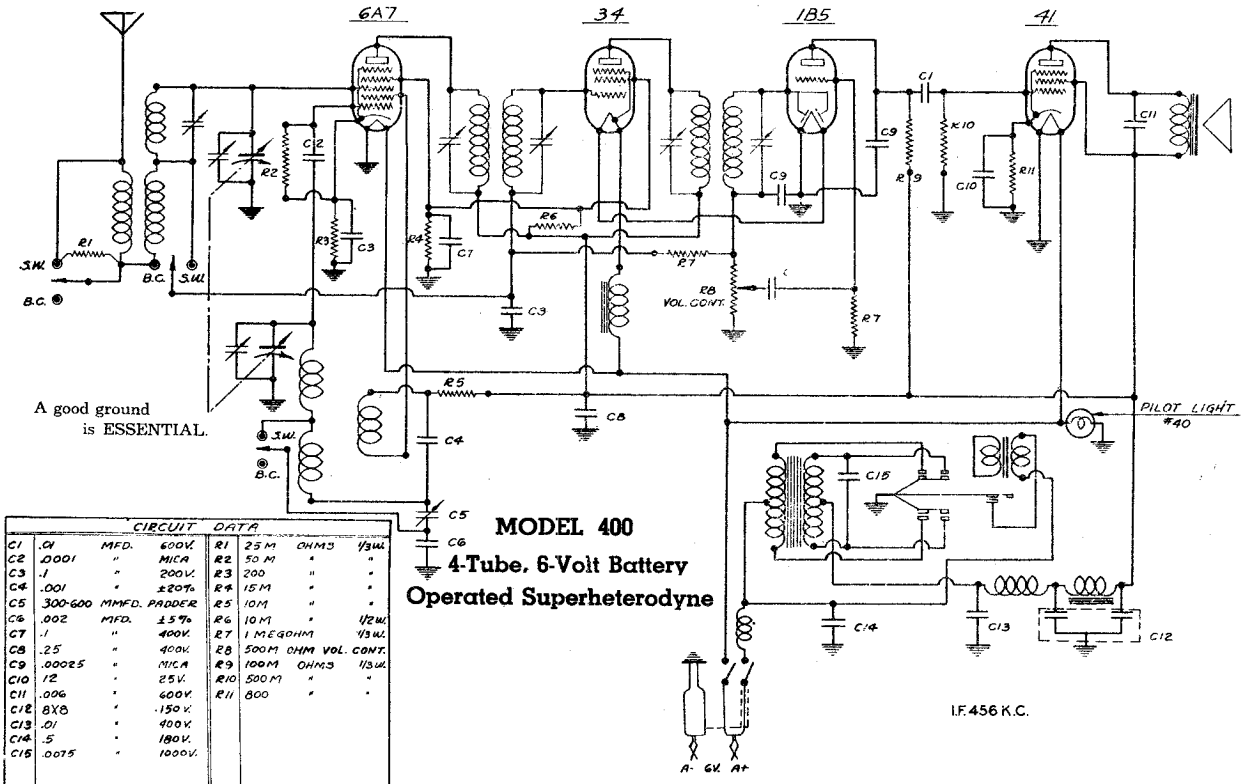

CIRCUIT DATA

C1	.04	MFD.	600V.	R1	25 M	OHMS	1/3W.
C2	.0001	"	MICA	R2	50 M	"	"
C3	.1	"	200V.	R3	200	"	"
C4	.001	"	±20%	R4	15 M	"	"
C5	300-600	MMFD.	PADDER	R5	10 M	"	"
C6	.002	MFD.	±5%	R6	10 M	"	1/2W.
C7	.1	"	400V.	R7	1 MEGOHM		1/3W.
C8	.25	"	400V.	R8	500 M	OHM VOL. CONT.	
C9	.00025	"	MICA	R9	100 M	OHMS	1/3W.
C10	12	"	25V.	R10	500 M	"	"
C11	.006	"	600V.	R11	800	"	"
C12	8X8	"	150V.				
C13	.01	"	400V.				
C14	.5	"	180V.				
C15	.0075	"	1000V.				

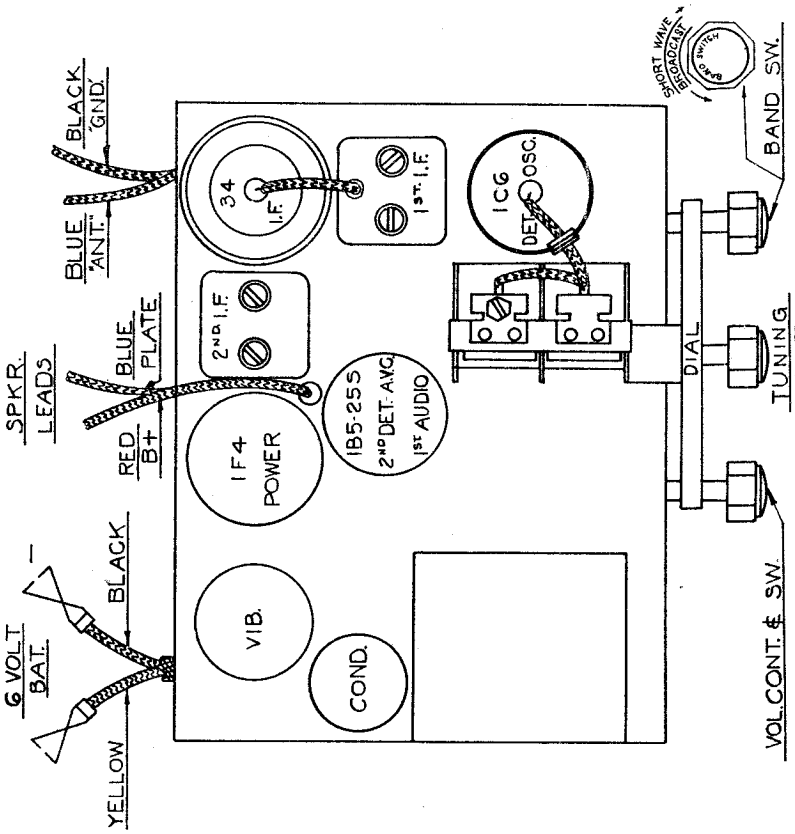

WARNING: IF WINDCHARGER IS USED DO NOT OPERATE SET WITH CHARGER CONNECTED.

Warning: Place Storage Battery in such a position that clips on Battery Cable may be fastened directly to Battery Terminals. Do not add any additional wire length to cables as this will make the set hum.

I. F. Alignment:

Connect the oscillator through a 1 condenser to the grid of the 6A7 tube and set the oscillator to 456 kilocycles. Peak each I. F. stage to resonance as indicated by maximum output on the output meter.

R. F. Alignment:

With the wave change switch in the broadcast position, set the oscillator to 1700 kilocycles and connect in series with a .00025 condenser to the antenna of the receiver. Rotate the variable condenser to the 1700 setting of the dial and adjust the trimmer condenser of the broadcast oscillator to resonance. The location of oscillator trimmer is on rear section of variable condenser. Reset the test oscillator to 1400 kilocycles and adjust antenna trimmer located corner front section of variable condenser. Now set oscillator to 600 kilocycles and adjust padder located on side of chassis. Check alignment at 1000 kilocycles.

For aligning police band, set test oscillator to 6 megacycles. Turn band switch to short wave. Rotate variable condenser until signal is heard. Peak antenna trimmer (across antenna coil under chassis) to maximum. Rock variable condenser slightly backward and forward until maximum peak is reached.

©John F. Rider, Publisher

MODEL 525
Schematic, Socket
Trimmers, Alignment

WARWICK MFG. CO.

I.F. 456 K.C.

The frequency range covered by this receiver is as follows: Broadcast band 537 KC to 1730 KC. The short wave band covers a range of 2.2 megacycles to 6.4 megacycles and either of these bands are selected at will by a flip of the band change switch. To the left for broadcast—To the right for short wave.

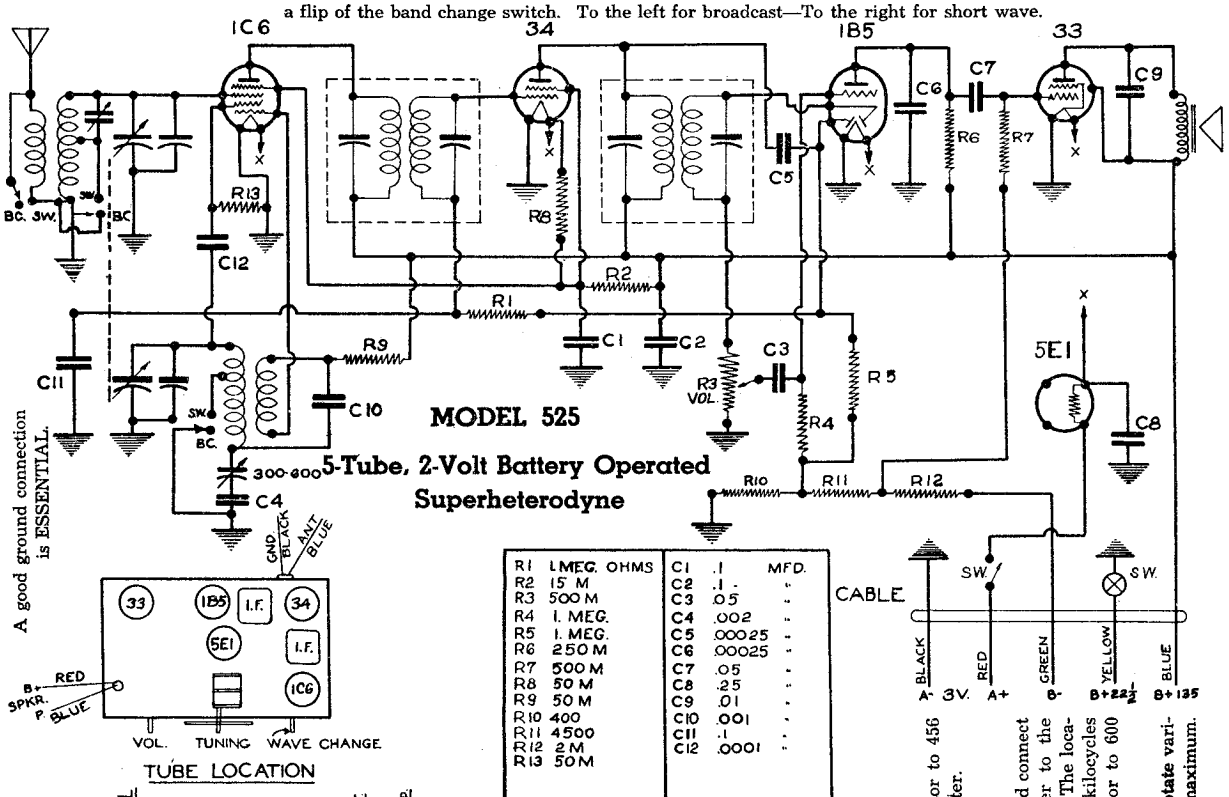

R1	1 MEG. OHMS	C1	.1 MFD.
R2	15 M	C2	.1
R3	500 M	C3	.05
R4	1. MEG.	C4	.002
R5	1. MEG.	C5	.00025
R6	250 M	C6	.00025
R7	500 M	C7	.05
R8	50 M	C8	.25
R9	50 M	C9	.01
R10	400	C10	.001
R11	4500	C11	.1
R12	2 M	C12	.0001
R13	50 M		

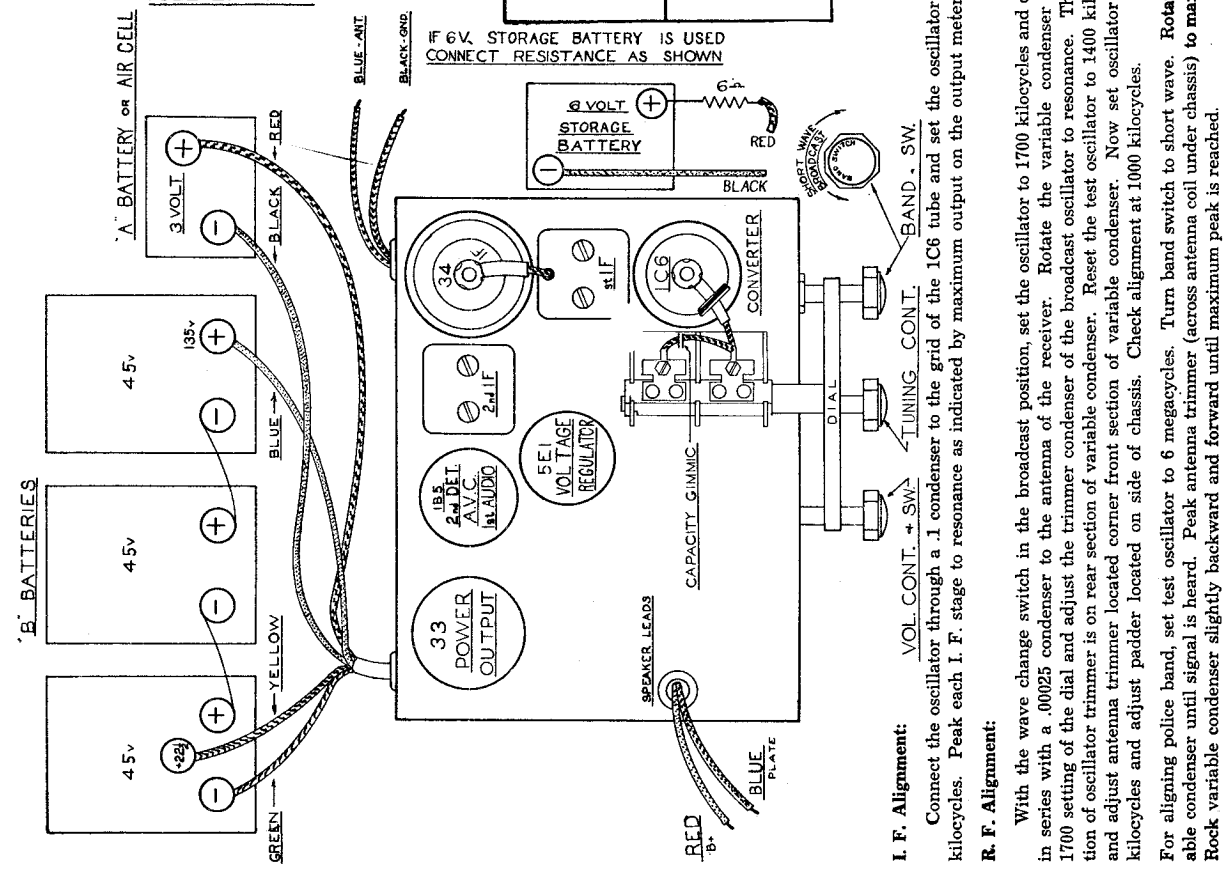

I. F. Alignment:

Connect the oscillator through a .1 condenser to the grid of the 1C6 tube and set the oscillator to 456 kilocycles. Peak each I. F. stage to resonance as indicated by maximum output on the output meter.

R. F. Alignment:

With the wave change switch in the broadcast position, set the oscillator to 1700 kilocycles and connect in series with a .00025 condenser to the antenna of the receiver. Rotate the variable condenser to the 1700 setting of the dial and adjust the trimmer condenser of the broadcast oscillator to resonance. The location of oscillator trimmer is on rear section of variable condenser. Reset the test oscillator to 1400 kilocycles and adjust antenna trimmer located corner front section of variable condenser. Now set oscillator to 600 kilocycles and adjust padder located on side of chassis. Check alignment at 1000 kilocycles.

For aligning police band, set test oscillator to 6 megacycles. Turn band switch to short wave. **Rotate** variable condenser until signal is heard. Peak antenna trimmer (across antenna coil under chassis) **to maximum. Rock** variable condenser slightly backward and forward until maximum peak is reached.

©John F. Rider, Publisher

MODEL 600
Schematic, Socket
Trimmers, Alignment

WARWICK MFG. CO.

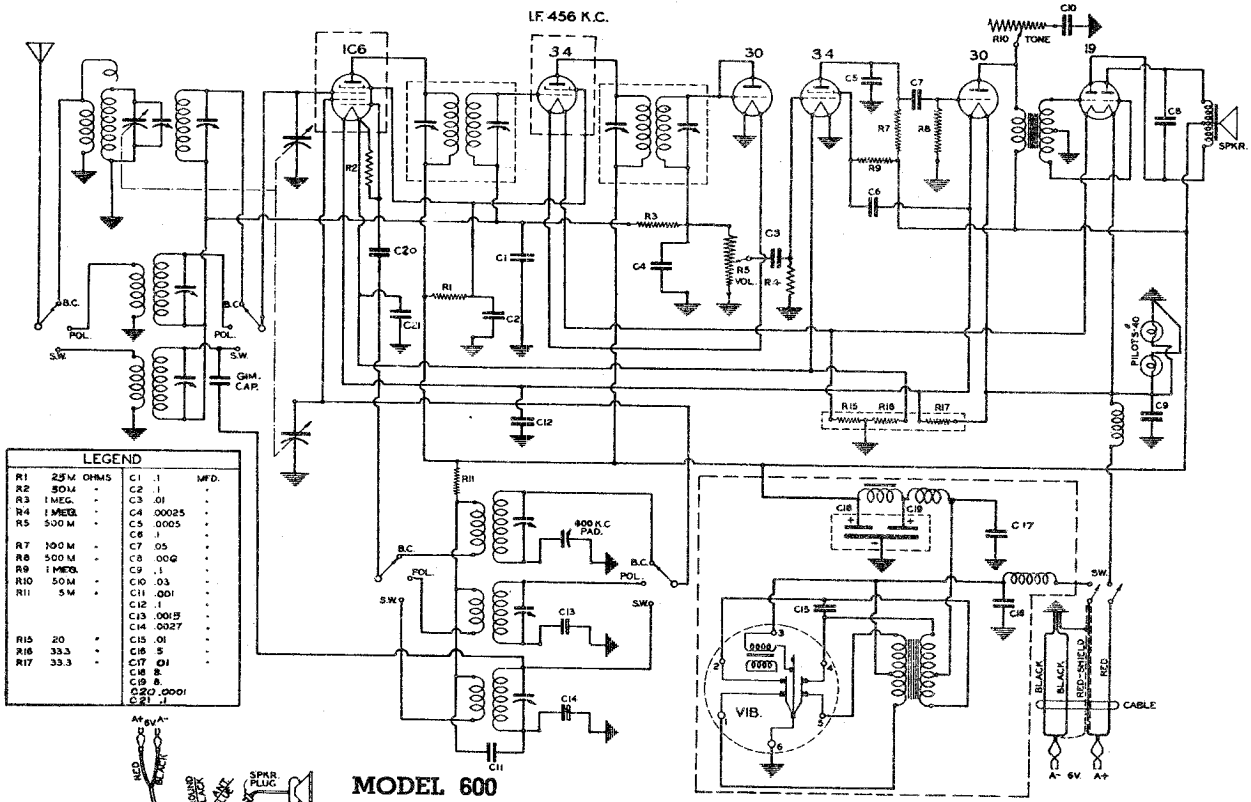

LEGEND

R1	25 M	OHMS	C1	.1	MFD.
R2	50 M	"	C2	.1	"
R3	1 MEG.	"	C3	.01	"
R4	1 MEG.	"	C4	.00025	"
R5	500 M	"	C5	.0005	"
R7	100 M	"	C7	.05	"
R8	500 M	"	C8	.006	"
R9	1 MEG.	"	C9	.1	"
R10	50 M	"	C10	.03	"
R11	5 M	"	C11	.001	"
			C12	.1	"
			C13	.0015	"
			C14	.0027	"
R15	20	"	C15	.01	"
R16	33.3	"	C16	5	"
R17	33.3	"	C17	.01	"
			C18	8	"
			C19	8	"
			C20	.0001	"

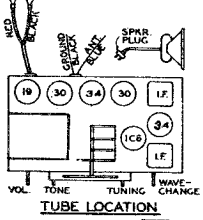

TUBE LOCATION

MODEL 600

6-Tube, 6-Volt Superheterodyne Battery Receiver

BANDS	SWITCH
537 to 1730 KC	LEFT
1.8 to 5.7 MC	CENTER
5.7 to 18.3 MC	RIGHT

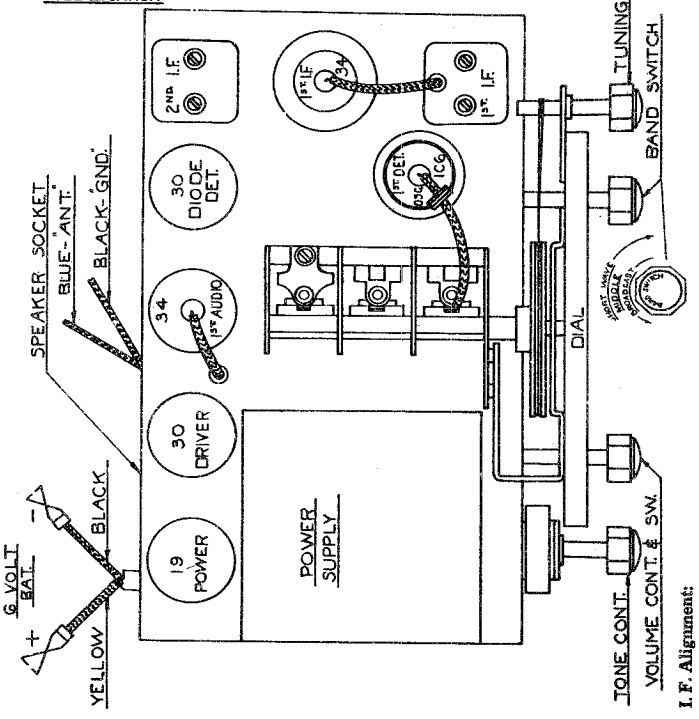

A good ground connection to a water pipe or other metallic conductor entering into the ground for some distance is ESSENTIAL.

WARNING: IF WINDCHARGER IS USED DO NOT OPERATE SET WITH CHARGER CONNECTED.

Warning: Place Storage Battery in such a position that clips on Battery Cable may be fastened directly to Battery Terminals. Do not add any additional wire length to cables as this will make the set hum.

I. F. Alignment:

Connect the oscillator through a .1 condenser to the grid of the 1C6 tube and set the oscillator to 456 kilocycles. Peak each I. F. stage to resonance as indicated by maximum output on the output meter.

R. F. Alignment:

With the wave change switch in the broadcast position, set oscillator to 1700 kilocycles and connect in series with a .00025 condenser to the antenna of the receiver. Rotate the variable condenser to the 1700 setting of the dial and adjust the trimmer condenser of the broadcast oscillator to resonance. This trimmer is located on the right side of the chassis, second position from the front. Reset the test oscillator to 1400 kilocycles and adjust antenna trimmer located on top of rear section of variable condenser. Peak detector trimmer located across preselector coil under chassis. Now set oscillator to 600 kilocycles and adjust padder located on top of the chassis. Check alignment at 1000 kilocycles.

For aligning the police band, set test oscillator to 5 megacycles and switch to the police band position on the set. With the condenser rotated to this frequency setting as indicated on the dial, adjust oscillator trimmer located on the right sid eof the chassis, first position from the front. Now adjust antenna trimmer located on the front of the chassis, left position, to resonance.

The short wave band is aligned by setting the condenser to 18 megacycles and adjust the oscillator trimmer located on the right side of the chassis, first position from the front to resonance with an 18 megacycle signal from the test oscillator. Turn dial to 16 M. C. Set test oscillator to 16 M. C. and adjust antenna trimmer through right hand hole in front of chassis, rocking variable condenser slightly back and forth to get maximum peak.

©John F. Rider, Publisher

WARWICK MFG. CO.

MODEL 700
Schematic, Socket
Trimmers, Alignment

LEGEND					
R1	25M OHMS	-	C1	-	MFD.
R2	50M	-	C2	.1	-
R3	1 MEG.	-	C3	.01	-
R4	1 MEG.	-	C4	.00025	-
R5	500 M	-	C5	.0005	-
			C6	.1	-
R7	100 M	-	C7	.05	-
R8	500 M	-	C8	.006	-
R9	1 MEG.	-	C9	.1	-
R10	50 M	-	C10	.03	-
R11	5 M	-	C11	.001	-
			C12	.1	-
			C13	.0015	-
			C14	.0027	-
R15	20	-	C15	.0075	-
R16	33.3	-	C16	.5	-
R17	33.3	-	C17	.01	-
R18	66.6	-	C18	8	-
R19	25 M	-	C19	8	-
R20	250 M	-	C20	.001	-
			C21	.0001	-
			C22	.1	-

MODEL 700

7-Tube, 6-Volt Battery Operated Superheterodyne

A good ground connection to a water pipe or other metallic conductor entering into the ground for some distance is ESSENTIAL.

WARNING: IF WINDCHARGER IS USED DO NOT OPERATE SET WITH CHARGER CONNECTED.

Warning: Place Storage Battery in such a position that clips on Battery Cable may be fastened directly to Battery Terminals. Do not add any additional wire length to cables as this will make the set hum.

I. F. Alignment:

Connect the oscillator through a .1 condenser to the grid of the 1C6 tube and set the oscillator to 456 kilocycles. Peak each I. F. stage to resonance as indicated by maximum output on the output meter.

R. F. Alignment:

With the wave change switch in the broadcast position, set the oscillator to 1700 kilocycles and connect in series with a .00025 condenser to the antenna of the receiver. Rotate the variable condenser to the 1700 setting of the dial and adjust the trimmer condenser of the broadcast oscillator to resonance. This trimmer is located on the right side of the chassis, second position from the front. Reset the test oscillator to 1400 kilocycles and adjust the antenna trimmer located on rear section of variable condenser. Adjust 1st detector trimmer under the chassis across preselector. Now set oscillator to 600 kilocycles and adjust padder located on side of chassis. Check alignment at 1000 kilocycles.

For aligning the police band, set test oscillator to 5 megacycles and switch to the police band position on the set. With the condenser rotated to this frequency setting as indicated on the dial, adjust oscillator trimmer located on the right side of the chassis, first position from the front. Now adjust antenna trimmer located on the front of the chassis, left position, to resonance.

The short wave band is aligned by setting the condenser to 18 megacycles and adjust the oscillator trimmer located on the right side of the chassis, third position from the front to resonance with an 18 megacycle signal from the test oscillator. Turn dial to 16 M. C. Set test oscillator to 16 M. C. and adjust antenna trimmer through right hand hole in front of chassis, rocking variable condenser slightly back and forth to get maximum peak.

©John F. Rider, Publisher

MODEL 701
Schematic, Socket

WARWICK MFG. CO.

Voltage, Trimmers
Alignment, Parts

A good ground materially aids in the reception of distant stations.

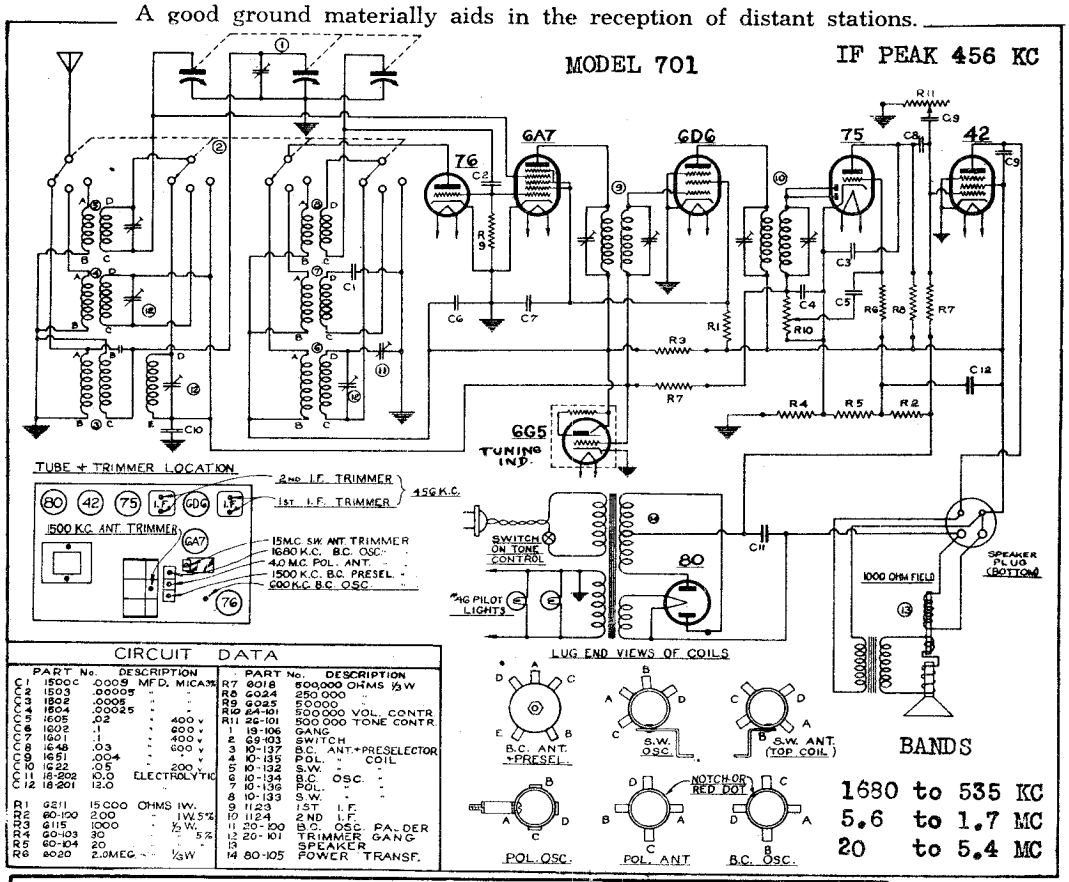

CIRCUIT DATA

PART No.	DESCRIPTION	PART No.	DESCRIPTION
C1 15000c	.0009 MFD. MICA 3%	R7 6018	500,000 OHMS ½W
C2 1503	.00005 " "	R8 6024	250,000 "
C3 1502	.0005 " "	R9 6025	50,000 "
C4 1504	.00025 " "	R10 24-101	5000,000 VOL. CONTR
C5 1505	.02 " 400 v	R11 26-101	500,000 TONE CONTR.
C6 1602	.1 " 600 v	1 19-106	GANG
C7 1601	.1 " 400 v	2 69-103	SWITCH
C8 1648	.03 " 100 v	3 10-137	B.C. ANT.+PRESELECTOR
C9 1651	.004 " "	4 10-135	POL. " COIL
C10 1622	.05 " 200 v	5 10-132	S.W. " "
C11 18-202	10.0 ELECTROLYTIC	6 10-134	B.C. OSC. "
C12 18-201	12.0 "	7 10-136	POL. " "
		8 10-133	S.W. " "
R1 6211	15,000 OHMS 1W.	9 1123	1ST I.F. "
R2 60-100	200 " 1W. 5%	10 1124	2ND I.F. "
R3 6115	1000 " ½W.	11 20-100	B.C. OSC. PADDER
R4 60-103	30 " 5%	12 20-101	TRIMMER GANG
R5 60-104	20 " "	13	SPEAKER
R6 6020	2.0MEG " ½W	14 80-105	POWER TRANSF.

FILAMENT VOLTAGES MEASURED ACROSS SOCKET.
ALL OTHER VOLTAGES MEASURED TO GROUND
WITH 1000 OHM PER VOLT VOLTMETER.

F - FILAMENT
P - PLATE
Sg - SCREEN GRID
Su - SUPPRESSOR GRID
G1 - OSC. GRID
G2 - OSC. PLATE
Dp - DIODE "
Gc - CONTROL GRID

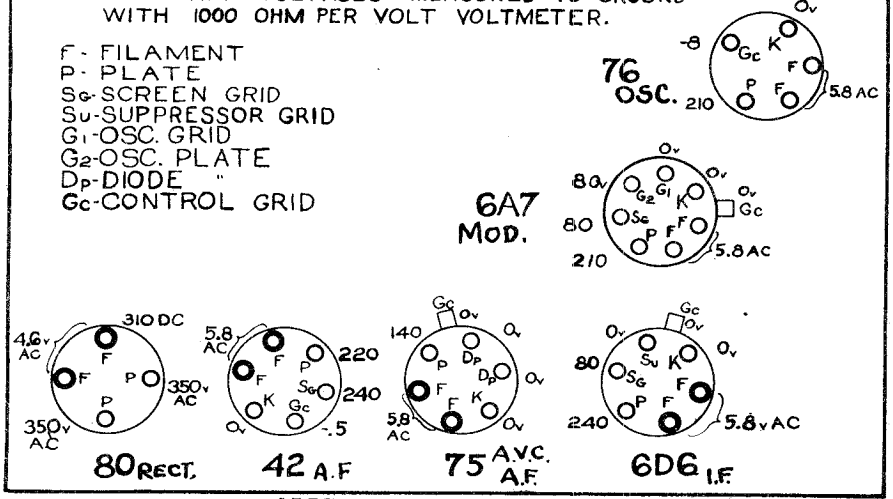

ALIGNMENT PROCEDURE

The equipment required for re-aligning this receiver is an output meter and a modulated source of radio frequency (a signal generator or microvolter). This source of radio frequency must be accurately calibrated in frequency and must have a method of varying the output.

All alignments must be made with the volume control turned full on and with the signal input from the generator reduced to as low a value as possible while still giving a sufficient output to be easily read on the output meter.

Connect the output meter, through a .5 M.F. condenser and a resistance of such a value as to make the total meter resistance approximately 7000 ohms, to the two small pins of the speaker plug. The output meter remains connected during the entire alignment procedure.

1. Connect the signal generator to the grid cap of the 6A7 tube through a 1 M.F. condenser. Connect the ground of the generator to the ground post of the receiver. With the wave switch on broadcast position and the dial set to about 1000 K.C., feed in a 456 K.C. signal. Adjust the trimmers on top of the first and second I.F. transformers until the maximum output is obtained. This aligns the I.F.

2. Leaving the wave switch on broadcast position turn the dial to the extreme high frequency end. Feed a 1680 K.C. signal to the receiver antenna post through a .00025 M.F. mica condenser. Adjust the 1680 K.C. broadcast oscillator trimmer for maximum output. Set the generator to 1500 K.C. and tune in this signal on the receiver. Then adjust the 1500 K.C. broadcast antenna trimmer and the 1500 K.C. broadcast preselector trimmer for maximum output. Set the generator to 600 K.C. and adjust the 600 K.C. broadcast oscillator pad to maximum output **while tuning the receiver back and forth across the signal** from the generator. This completes the alignment of the broadcast band.

3. The police band is aligned by feeding 4.0 M.C. signal to the receiver antenna lead through the .00025 condenser. Turn the wave switch to the center position and tune the receiver to this signal. Adjust the 4.0 M.C. police antenna trimmer for best output.

4. The short wave band is aligned in the same way using a 15 M.C. signal and adjusting the 15 M.C. short wave antenna trimmer after having turned the wave switch to the right hand position.

©John F. Rider, Publisher

WARWICK MFG. CO.

MODEL 725
Schematic, Socket
Trimmers, Alignment

A good ground connection to a water pipe or other metallic conductor entering into the ground for some distance is ESSENTIAL.

IF PEAK 456 KC

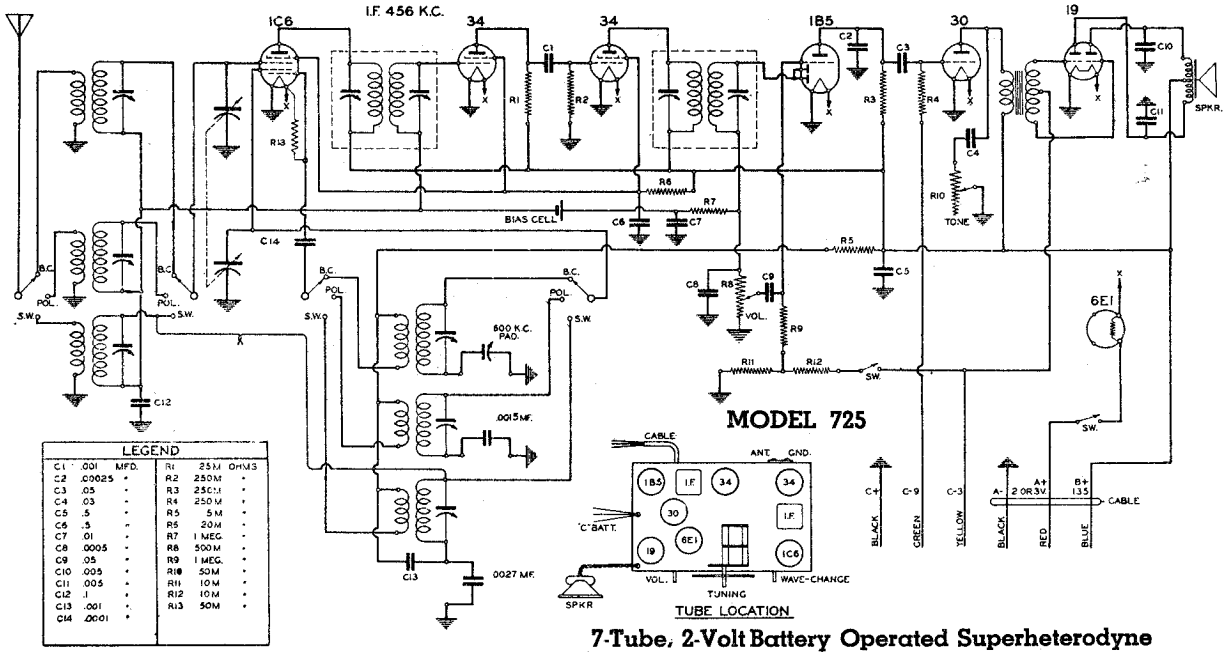

LEGEND					
C1	.001	MFD.	R1	.25M	OHMS
C2	.00025	"	R2	250M	"
C3	.05	"	R3	250M	"
C4	.03	"	R4	250M	"
C5	.5	"	R5	5M	"
C6	.5	"	R6	20M	"
C7	.01	"	R7	1 MEG.	"
C8	.0005	"	R8	500M	"
C9	.05	"	R9	1 MEG.	"
C10	.005	"	R10	50M	"
C11	.005	"	R11	10M	"
C12	.1	"	R12	10M	"
C13	.001	"	R13	50M	"
C14	.0001	"			

7-Tube, 2-Volt Battery Operated Superheterodyne

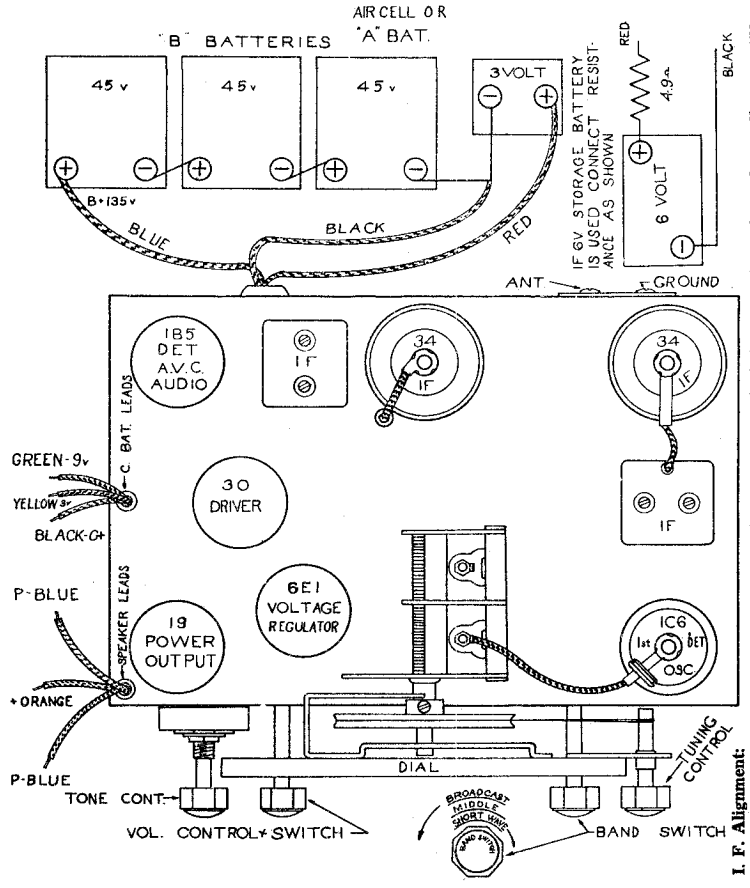

I. F. Alignment:
Connect the oscillator through a .1 condenser to the grid of the 1C6 tube and set the oscillator to 456 kilocycles. Peak each I. F. stage to resonance as indicated by maximum output on the output meter.

R. F. Alignment:
With the wave change switch in the broadcast position, set the oscillator to 1700 kilocycles and connect in series with a .00025 condenser to the antenna of the receiver. Rotate the variable condenser to the 1700 setting of the dial and adjust the trimmer condenser of the broadcast oscillator to resonance. This trimmer is located on the right side of the chassis, second position from the front. Reset the test oscillator to 1400 kilocycles and adjust antenna trimmer located under the chassis. Now set oscillator to 600 kilocycles and adjust padder located on top of the chassis. Check alignment at 1000 kilocycles.

For aligning the police band, set test oscillator to 5 megacycles and switch to the police band position on the set. With the condenser rotated to this frequency setting as indicated on the dial, adjust oscillator trimmer located on the right side of the chassis, first position from the front. Now adjust antenna trimmer located on the front of the chassis, left position, to resonance.

The short wave band is aligned by setting the condenser to 18 megacycles and adjust the oscillator trimmer located on the right side of the chassis, third position from the front to resonance with an 18 megacycle signal from the test oscillator. Turn dial to 16 M. C. Set test oscillator to 16 M. C. and adjust antenna trimmer through right hand hole in front of chassis, rocking variable condenser slightly back and forth to get maximum peak.

©John F. Rider, Publisher

MODEL 741
Schematic, Socket

WARWICK MFG. CO.

Trimmers, Voltage
Alignment, Parts

The tubes used are a 76 as oscillator, a 6A7 as modulator, a 6D6 as I. F. amplifier, a 75 as A. V. C. and audio rectifier and audio voltage amplifier, a 41 as power audio amplifier, an 80 as a power rectifier and a 6G5 as tuning indicator.

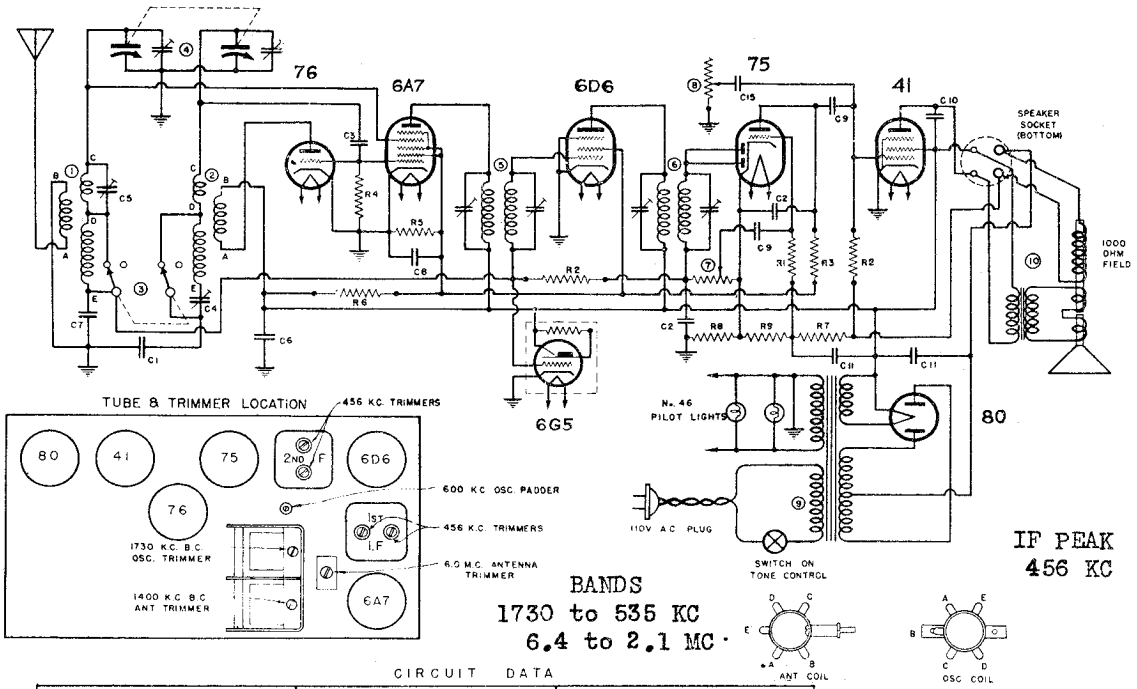

CIRCUIT DATA

	PART NO.	DESCRIPTION
C1	15-101	.00148 MFD. MICA 5%
C2	1504	.00025
C3	1501	.0001
C4	20-100	B.C. OSC. PADDING COND.
C5	2504	S.W. ANTENNA TRIMMER
C6	1602	.1 MFD. 600V
C7	1600	.1 200V
C8	1607	.05 400V
C9	1603	.01 400V
C10	1651	.004 600V

	PART NO.	DESCRIPTION
R1	6020	2 MEGOHM 1/3 W
R2	6016	.5
R3	6026	100,000 OHMS
R4	6028	40,000
R5	6117	25,000 1/2 W
R6	6210	10,000 1 W
R7	60-100	200 OHMS 1W WIRE WOUND
R8	60-101	50 1/2W
R9	60-104	20
C11	18-200	DUAL 8 MFD 450V ELC'TC

	PART NO.	DESCRIPTION
1	10-143	B.C. & S.W. ANTENNA COIL
2	10-144	OSCILLATOR
3	6922	WAVE SWITCH
4	19-107	2 GANG VARIABLE COND
5	1123	FIRST I.F. TRANSFORMER
6	1124	SECOND I.F.
7	24-101	VOLUME CONTROL
8	26-101	TONE CONTROL & SWITCH
9	80-106	POWER TRANSFORMER
10		SPEAKER

MODEL 741

CIRCUIT DIAGRAM	
DRAWN BY	DATE 3-18-37

A good ground materially aids in the reception of distant stations.

F - FILAMENT
P - PLATE
K - CATHODE
Sg - SCREEN GRID
Su - SUPPRESSOR
Dp - DIODE PLATE
Gc - CONTROL GRID
Gi - OSC. GRID
G2 - OSC. PLATE

FILAMENT VOLTAGES MEASURED ACROSS SOCKET.
ALL OTHER VOLTAGES MEASURED TO GROUND
WITH 1000 OHMS PER VOLT
VOLTMETER.

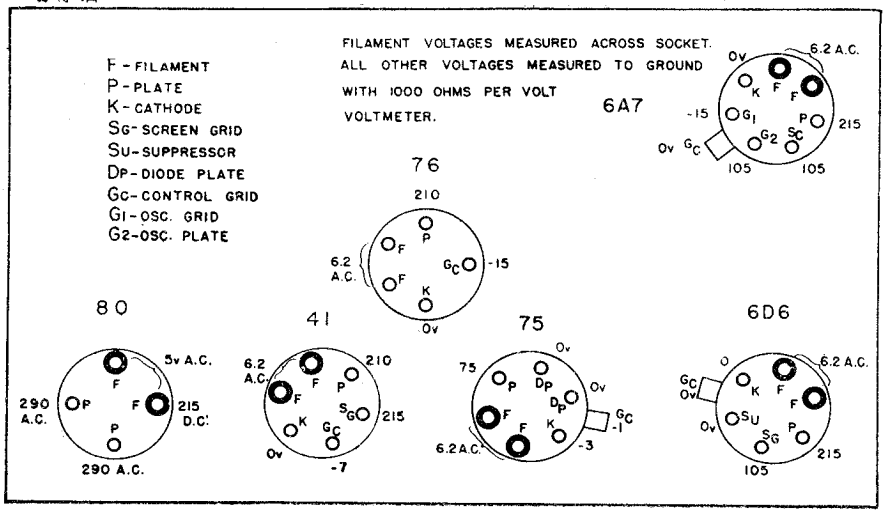

ALIGNMENT PROCEDURE

All alignments must be made with the volume control turned full on and with the signal input from the generator reduced to as low a value as possible while still giving a sufficient output to be easily read on the output meter.

Connect the output meter, through a .5 M.F. condenser and a resistance of such a value as to make the total meter resistance approximately 7000 ohms, to the two small pins of the speaker plug. The output meter remains connected during the entire alignment procedure.

Connect the signal generator to the grid cap of the 6A7 tube through a .1 M.F. condenser. Connect the ground of the generator to the ground lead of the receiver. With the wave switch on broadcast position and the dial set to about 1000 K.C., feed in a 456 K.C. signal. Adjust the trimmers on top of the first and second I.F. transformers until the maximum output is obtained. This aligns the I.F.

Leaving the wave switch on broadcast position turn the dial to the extreme high frequency end. Feed a 1730 K.C. signal to the receiver antenna lead through a .00025 M.F. mica condenser. Adjust the 1730 K.C. broadcast oscillator trimmer until maximum output is shown. Set the generator to 1400 K.C. and tune in this signal on the receiver. Then adjust the 1400 K.C. broadcast antenna trimmer to maximum output. Set the generator to 600 K.C. and adjust the 600 K.C. broadcast oscillator pad to maximum output **while tuning the receiver back and forth across the signal** from the generator. This completes the alignment of the broadcast band.

The short wave band is aligned while feeding a 6.0 M.C. signal to the receiver antenna lead through a .00025 M.F. mica condenser. Turn the wave switch to short wave position and tune in the 6.0 M.C. signal. Adjust the 6.0 M.C. short wave trimmer to maximum output.

©John F. Rider, Publisher

WARWICK MFG. CO.

MODEL 749
Schematic, Socket
Trimmers, Voltage
Tuner Adjustment

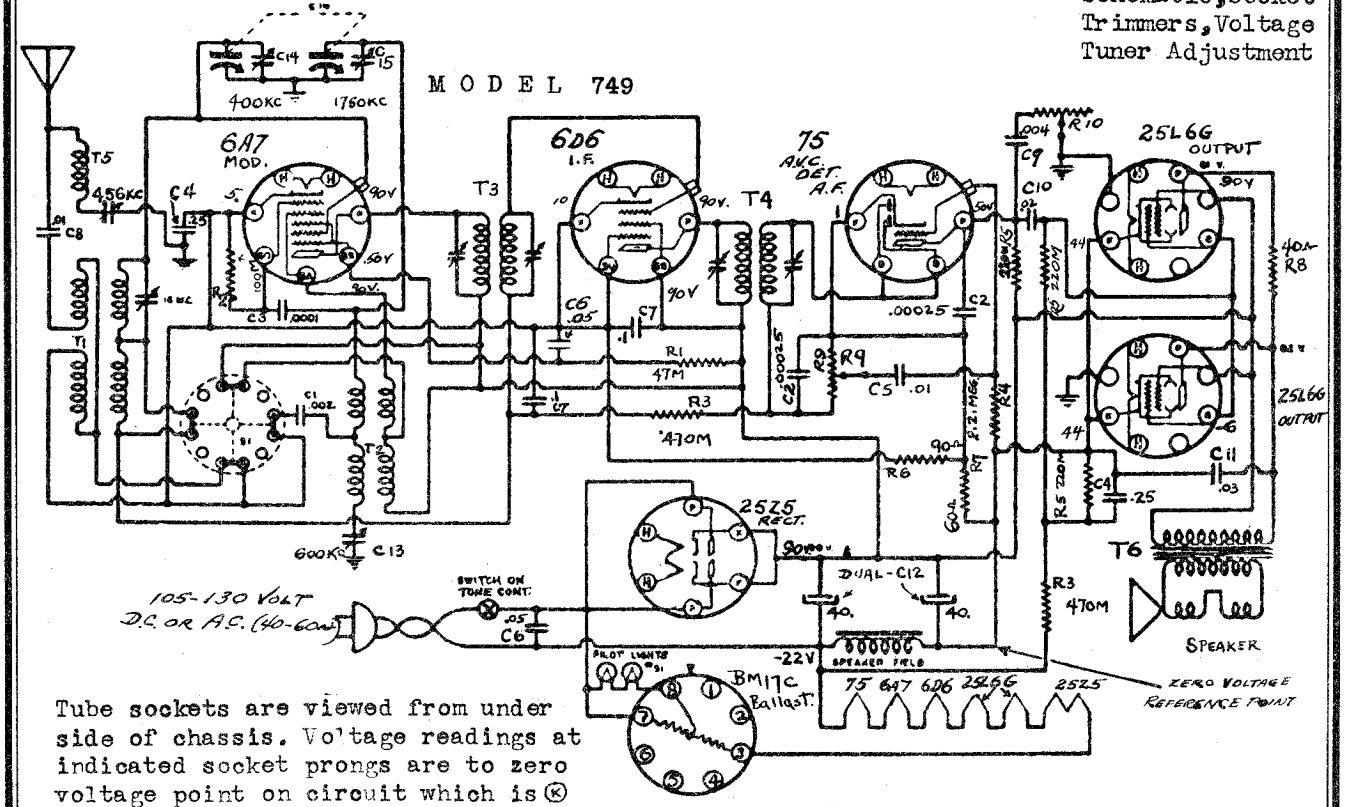

Tube sockets are viewed from under side of chassis. Voltage readings at indicated socket prongs are to zero voltage point on circuit which is Ⓚ on 25L6G tube. Voltages must be measured with no signal. Alignment is to be made at the frequencies shown on the trimmer condensers.

Figures at cathodes are cathode currents in milliamperes. Capacity values are in microfarads.

Wave trap adjustment at 456 KC. Input is made to provide maximum reduction of signal. Where no voltage reading is shown at socket prongs, it indicates zero voltage or very low reading.

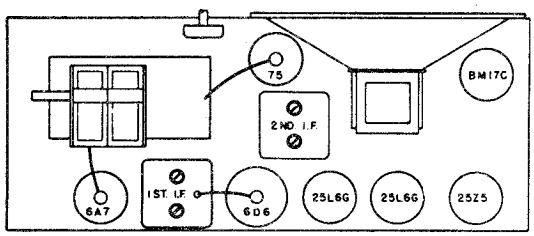

LOCATION OF PARTS ON TOP OF CHASSIS

IF PEAK 456 KC

SETTING PUSH-BUTTONS

1. By means of the Station Selector Knob, tune in **WITH THE RIGHT HAND AS ACCURATELY AS POSSIBLE** the station having the lowest frequency—that is, your selected station which is tuned in nearest the right-hand side of the dial.

2. After the station has been tuned in accurately with the right hand, continue to hold it in its exact position firmly, and with the left hand loosen the Push-Button to be set up for that station by unscrewing the Push-Button about one turn to the left (counter-clockwise).

3. Continuing to hold the Station Selector Knob in its exact position, **PUSH THE PUSH-BUTTON IN ALL THE WAY** with the left hand.

4. After the Push-Button has been depressed all the way, tighten it gently toward the right (clockwise). Release Push-Button slowly and when in normal position grip button and tighten firmly.

The Push-Button tuning system is now correctly set up for your first selected station of lowest frequency and the Call Letter Tab for this station should be at the extreme right of the Call Letter Holder.

Follow through with this same procedure, setting up the other 5 stations in the order of their frequency—that is, the second station set up will be second lowest in frequency and the third station set up will be third lowest in frequency.

Carefully check each Push-Button for the accuracy of its setting. If, when tuning in any station with its Automatic Push-Button it does not have equal volume or clarity to that obtained with manual tuning, this may indicate the automatic adjustment for that station was not made accurately. Should there be any inaccuracy in any one of the Push-Button adjustments, correction can be made by repeating the above procedure for that button only. Do not reset those Push-Buttons that are accurately adjusted.

No further adjustments are necessary to operate your radio automatically or manually. To receive any one of your six selected stations for automatic operation, merely push in **ALL THE WAY** the Button set up for that station.

To receive all other stations in the regular manner, push in the Station Selector Knob and turn it to the frequency of the station desired.

©John F. Rider, Publisher

MODEL 751
Schematic, Socket

WARWICK MFG. CO.

Trimmers, Voltage
Alignment, Parts

This receiver is a 7 tube, 6 volt storage battery operated superheterodyne.

The tubes used are a 30 as oscillator, a 1A6 as modulator, a 1A4 as I.F. amplifier, a 6T7G as A. V. C. and audio rectifier and audio voltage amplifier, a 6L5G as audio driver, a 19 as power audio amplifier, and a 6N5 as tuning indicator.

This receiver is made to cover 3 tuning bands, the standard broadcast band which ranges from 1680 K.C. to 535 K.C., the middle or police band which has a frequency range of from 5.6 M.C. to 1.7 M.C. and high frequency or foreign band which is from 20 M.C. to 5.4 M.C.

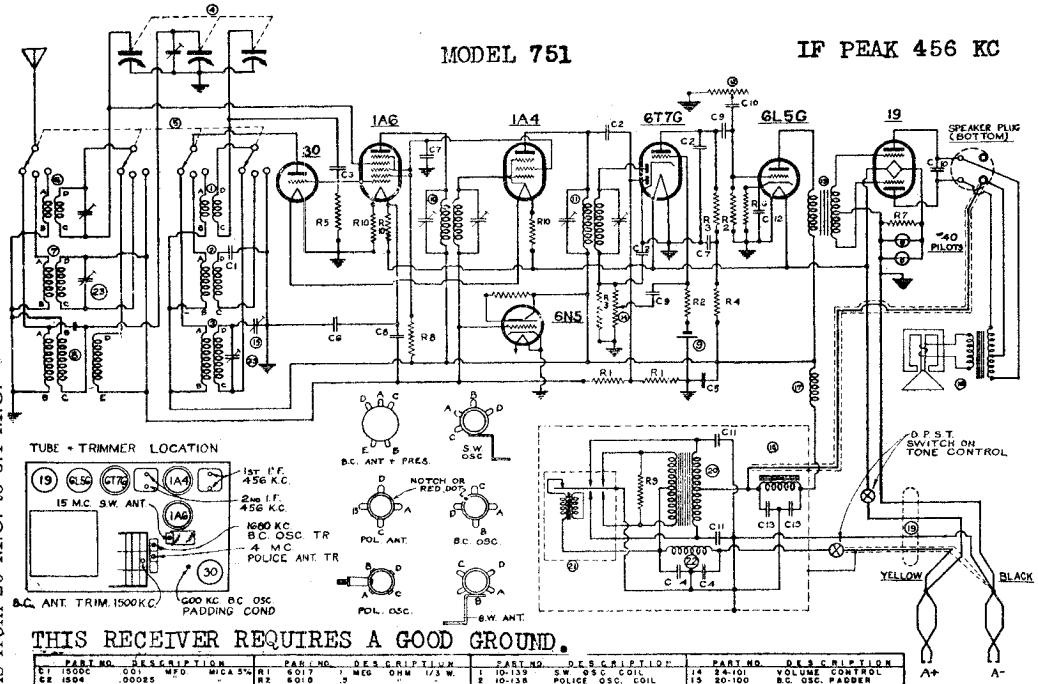

THIS RECEIVER REQUIRES A GOOD GROUND.

PART NO.	DESCRIPTION				PART NO.	DESCRIPTION				PART NO.	DESCRIPTION
C1	1500C	COIL	MFD	MICA 5%	R1	6017	1	MEG	OHM 1/3 W.	1	10-139 S.W. OSC. COIL
C2	1504	.00025	"	"	R2	6018	.5	"	"	2	10-138 POLICE OSC. COIL
C3	1510	.000025	"	"	R3	6024	25	"	"	3	10-134 B.C. OSC. COIL
C4	1655	"	"	180v	R4	6025	100,000	"	"	4	19-106 3 GANG CONDENSER
C5	1616	.25	"	400v	R5	6025	50,000	"	"	5	69-103 WAVE SWITCH
C6	1614	.25	"	200v	R6	6006	1500	"	"	6	10-132 S.W. ANT. COIL
C7	1601	"	"	400v	R7	6007	200	"	"	7	10-135 POLICE ANT. COIL
C8	1600	"	"	200v	R8	6117	25,000	"	1/2 W.	8	10-137 B.C. ANT. & PRESEL. C'L.
C9	1603	.01	"	400v	R9	6101	100	"	"	9	4800 BIAS CELL
C10	1604	.006	"	600v	R10	60-102	33 1/3	"	WIRE WOUND	10	1133 1ST I.F. TRANSFORMER
C11	1604	.01	"	600v						11	1134 2ND I.F. TRANSFORMER
C12	16-100	10 M.F.D. 25V.		ELECTROLYTIC						12	26-102 TONE CONTROL
C13	1648	8 "	150V	"						13	8010 PUSH-PULL AUDIO TRANS.

PART NO.	DESCRIPTION
14	24-101 VOLUME CONTROL
15	20-100 B.C. OSC. PADDER
16	SPEAKER
17	3303 R.F. "B" CHOKE
18	2307 FILTER
19	23-103 BATTERY CABLE
20	8041 POWER TRANFORMER
21	3407 VIBRATOR
22	3313 R.F."A" CHOKE
23	20-102 TRIMMER STRIP

FILAMENT VOLTAGES MEASURED ACROSS SOCKET.
ALL OTHER VOLTAGES MEASURED TO GROUND
WITH 1000 OHM PER VOLT VOLTMETER.

F - FILAMENT
P - PLATE
S_G - SCREEN GRID
S_U - SUPPRESSOR
G_1 - OSC. GRID
G_2 - OSC. PLATE
D_P - DIODE "
G_C - CONTROL GRID

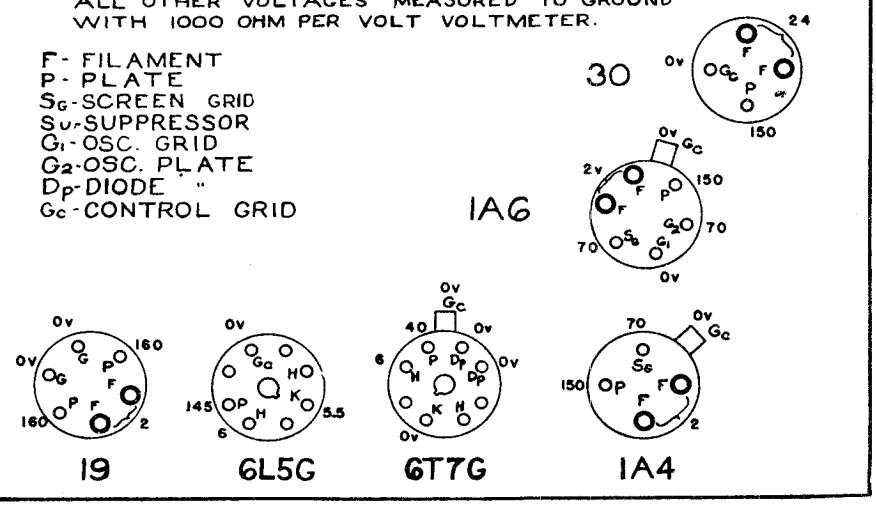

ALIGNMENT PROCEDURE

All alignments must be made with the volume control turned full on and with the signal input from the generator reduced to as low a value as possible while still giving a sufficient output to be easily read on the output meter.

Connect the output meter, through a .5 M.F. condenser and a resistance of such a value as to make the total resistance approximately 10,000 ohms, to the two small pins of the speaker plug. The output meter remains connected during the entire alignment procedure.

Connect the signal generator to the grid cap of the IA6 tube through a .1 M.F. condenser. Connect the ground of the generator to the ground post of the receiver. With the wave switch on broadcast position and the dial set to about 1000 K.C., feed in a 455 K.C. signal. Adjust the trimmers on top of the first and second I.F. transformers until the maximum output is obtained. This aligns the I.F.

Leaving the wave switch on broadcast position turn the dial to the extreme high frequency end. Feed a 1680 K.C. signal to the receiver antenna post through a .00025 M.F. mica condenser. Adjust the 1680 K.C. broadcast oscillator trimmer for maximum output. Set the generator to 1500 K.C. and tune in this signal on the receiver. Then adjust the 1500 K.C. broadcast antenna trimmer for maximum output. Set the generator to 600 K.C. and adjust the 600 K.C. broadcast oscillator pad to maximum output **while tuning the receiver back and forth across the signal** from the generator. This completes the alignment of the broadcast band.

The police band is aligned by feeding 4.0 M.C. signal to the receiver antenna post through the .00025 condenser. Turn the wave switch to the center position and tune the receiver to this signal. Adjust the 4.0 M.C. police antenna trimmer for best output.

The short wave band is aligned in the same way using a 15 M.C. signal and adjusting the 15 M.C. short wave antenna trimmer after having turned the wave switch to the right hand position.

©John F. Rider, Publisher

MODEL Phantom
Light Dial
Adjustments

WELLS-GARDNER & CO.

MODEL 17-Button
Telephone Dial

This Supplements Series A1, A2, A3, A4, A5, and A7 Service Manuals and covers Dials and Drives used with these Chassis.

NOS. 9, 10, & 11 — 17 BUTTON TELEPHONE DIAL

NOS. 3 & 7 — PHANTOM LIGHT DIAL

APRIL, 1937

Identification of Dial and Chassis

The following description will identify the different dials:

No. 9 Dial—17 Button Telephone Dial—Station call letters in black push buttons.

No. 11 Dial—Same as No. 9 Dial except push buttons are brown.

No. 10 Dial—17 Button Telephone Dial—Station call letters are rectangular in shape and are mounted in rectangular openings in escutcheon ring. Equipped with visible tone and volume indicators.

No. 3 Dial—Glass dial—Moving beam of light indicators—Tone and volume indicated by series of circles.

No. 7 Dial—Glass dial—Moving beam of light indicators—Tone and volume indicated by slanting lines.

The following description will identify the chassis used with the above dials:

7 tube—Series A4
8 tube—Series A1
9 tube—Series A5
9 Tube—Series A7 (Export)
11 Tube—Series A2
13 Tube—Series A3

Telephone Dial Assembly

The telephone dial assembly provides a means of pre-setting a number of broadcasting stations and tuning in these stations at any time by depressing a button and rotating the dial to a stop position.

The apparatus is mounted on an assembly attached at the front of the chassis. An examination of this assembly will clearly show the method of operation.

Silencer Circuit—A silencer circuit is provided which results in silent tuning between stations when using the telephone dial buttons.

When a telephone dial button is depressed, a circuit is established between the ungrounded end of the volume control and the chassis ground. Referring to Fig. 1 it will be noted that contact is made between the line from the volume control, contact ring, contact washer arm (when button is depressed), spring and pulley ring stud. Since the pulley ring is at ground potential, this grounds the audio voltage and no signal will be heard until the button is released to break the contact.

It should be noted that the contact ring is part of the pulley ring assembly, but is insulated from it.

In the case of powerful local stations a slight amount of signal may be heard when the button is depressed.

Telephone Dial Adjustments

Noise When Tuning in a Signal with a Telephone Dial Button

As explained in the article on "Silencer Circuit" in this manual, no noise or signal should be heard when tuning in a signal with a telephone dial button until the button is released. If noise is heard while tuning in a signal with one of these buttons, it can be corrected as follows:

If Noise Occurs on All Buttons—This is probably due to a poor contact between the flat contact spring and the contact ring—See Fig. 1. Clean the flat contact spring and contact ring to insure a good electrical connection. Ordinary cleaning fluid may be used and will be effective in most cases in cleaning the surface without affecting the plating. If the contact is still not satisfactory, a piece of fine emery cloth may be used.

If Noise Occurs on One Button Only—This is due to a poor contact between the pulley ring stud, spring, contact washer, and contact ring—See Fig. 1. Clean all of these items of the particular button, in the same manner as mentioned previously, so as to provide a good electrical connection.

Telephone Dial Drive Cord Slipping

If the telephone dial drive cord slips on the tuning shaft pulley, this may be remedied by adjusting the drive cord tension pulley. Loosen the tension pulley bracket screw and adjust pulley assembly until the desired tension is obtained.

Position of Stop Pin

When the telephone dial assembly is on the chassis, the gang condenser rotor should not completely open or close. The travel of the rotor in this respect is controlled by the gang stop pin on the pulley ring—See Fig. 4. This is necessary to protect the gang condenser in case the telephone dial is swung rapidly to either of the extreme positions. When the gang stop pin is properly set, it will serve as the stop at both extreme positions. If the rotor is seen to open completely or close completely, the stop pin should be pulled back and re-set to overcome this condition.

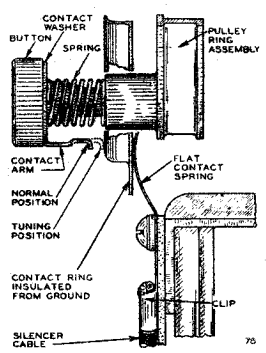

Fig. 1—Silencer Assembly

Greasing and Oiling

After a period of time, put some light grease on the pulley ring shaft and on the teeth of the pulley ring. Use light oil on the drive shaft assembly bearing, care being taken not to get any on the drive cord.

Telephone Dial Replacements

Replacing Complete Dial and Condenser Assembly

Remove the grid lead clip from tube grid cap.

Remove silencer cable from the contact spring assembly. Unsolder dial lamp lead from terminal of tube socket.

Unsolder the three stator section connections of the gang condenser. Unsolder the three braided shield leads which ground the gang condenser frame to the chassis, taking care not to loosen the connections of any other units which are grounded at these common points.

At the back of the gang condenser is a stud which secures the assembly to an "L" bracket which is secured to the chassis.

Through this stud is a cotter pin. Remove only the cotter pin, metal washer, and rubber washer.

Viewing the assembly from the back, on the left is a brass bolt which holds the dial support bracket to the chassis—remove this bolt from underneath the chassis.

Grasp the dial support brace and move entire assembly toward the front of the chassis. When the support casting rubber cushions slip clear of the slot in front of chassis, lift entire assembly clear of chassis.

To replace this assembly, reverse the procedure as given above.

Replacing Pulley and Button Ring Assembly Only

Remove drive cord.

From underneath the chassis, unsolder the dial lamp lead from prong of the tube socket. Pull this lead through and out to the front of the assembly.

Remove the four escutcheon screws which hold the escutcheon ring and glass crystal in place. The dial scale pointer is removed by unhooking it from the center stud. Unscrew and remove center stud, washers, and dial scale. Slide pulley ring assembly off the center shaft.

On the No. 10 dial, two strips of celluloid between the escutcheon ring and the glass crystal will have to be removed.

To replace the pulley ring assembly, proceed as follows: Lay the assembly face down and adjust the stop pin. The stop pin (Fig. 2) is directly in back of the wide spacer on the dial button ring. Pull this pin back and adjust it to the center position —See Fig. 2.

Rotate tuning condenser rotor counter-clockwise (from front) as far as possible—See. Fig. 2.

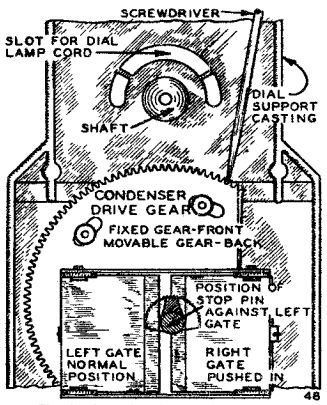

Fig. 2—Replacing Pulley Ring Assembly

Place the pulley ring assembly on the shaft with the knot of the dial lamp lead at the top—do not engage the gears.

Pull the dial lamp lead through the slot in the pulley ring gear and through the long slot in the dial support casting. Then place this lead through the clip under the dial support brace and out through the opening in the back of this brace.

With the gears still disengaged, rotate the pulley ring clockwise (from front) ½ revolution until the stop pin passes over the right gate and comes to rest against the left gate—See Fig. 2.

With the condenser rotor fully closed, push the pulley ring on the shaft until the pulley ring gear engages the *fixed gear only* (front) of the condenser drive gear assembly. Hold the pulley ring assembly and with a fine blade screw driver, move the movable (back) gear clockwise one tooth relative to the fixed gear—See Fig. 2. Then push the pulley ring all of the way on, engaging the movable gear.

Now lay the chassis on its back. Replace in the order given the large washer with rectangular hole, dial scale, washers, center stud, dial pointer, glass crystal, and escutcheon. Resolder the lamp lead.

For the No. 10 dial, before putting the escutcheon on, lay the two celluloid strips on the glass crystal with the inside flange facing away from the glass. Then lay the escutcheon on top of the celluloid strips. The section not cut out for station call letters should be at the wide spacer in the button spacer ring. Center the small holes in the celluloid discs in the station call letter openings and then tighten the escutcheon screws.

The stop pin must now be adjusted, as explained in article "Position of Stop Pin," until the condenser does not open or close fully. Injury to the condenser will result if allowed to open or close fully.

Replace the drive cord as explained in the article "Replacing Drive Cord."

Replacing Gates

After a great amount of use, one or both of the stop gates may wear, making it necessary to replace the stop gate assembly. This is done by first removing the pulley ring assembly as explained in the article "Replacing Pulley and Button Ring Assembly."

The stop gate assembly is then removed by taking out the two screws at the bottom of the assembly.

©John F. Rider, Publisher

MODEL 17-Button
Telephone Dial

WELLS-GARDNER & CO.

MODEL Phantom
Light Dial
Replacement Data

Replacing Drive Cord

Remove the old drive cord and tension spring. Rotate telephone dial clockwise (from back of chassis) as far as it will go.

Viewing the pulley ring drum from above and to the back, place the knotted end of the drive cord in the slot provided for it, catching the knot in back of the rib as shown in Fig. 3.

Bring the cord down and around the right side

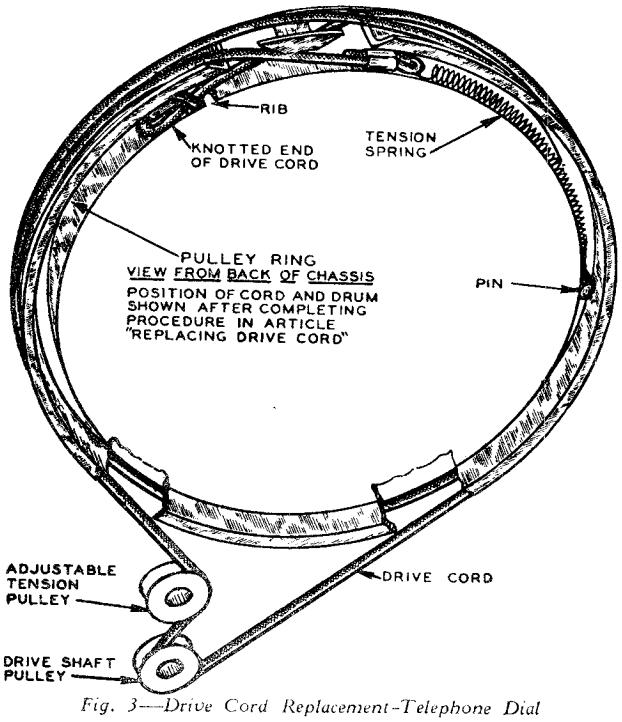

Fig. 3—Drive Cord Replacement-Telephone Dial

(from back) of the drum at front part of groove in pulley ring drum and under the drive shaft pulley making one-half turn on this pulley. Then bring the cord around the right side (from back) of the adjustable tension pulley and up to the upper left side of the pulley ring drum in front of the cord already on.

Hold the cord in the left hand and rotate the dial counter-clockwise with the right hand. Feed the cord on the drum in such a way that after passing the two openings at the top of the pulley ring drum, it passes to the back of the groove in the drum. After the pulley ring drum makes one complete revolution, place the cord through the left drum opening into the slot and secure the tension spring hook over the pin provided for it—See Fig. 3.

Replacing a Telephone Dial Button or Button Shaft

A telephone dial button or button shaft may be replaced without removing the chassis from the cabinet.

Rotate the dial until the button shaft to be replaced is in the position shown in Fig. 4. Using a wooden wedge block or any other wedge, hold this button shaft in place as shown. Remove the clear celluloid disc and the call letter disc with the point of a pin from the button of the shaft to be replaced (No. 10 dial—brown opaque celluloid disc only).

Remove the hairpin spring from the front of this shaft, spreading it with an ice pick or screwdriver. Take off the button, metal washer, molded bushing, and spring. Take out the wedge block, remove the button shaft to be replaced from the back of the dial assembly and put in the new one. Then put the wedge block back in place again as illustrated.

Lay the cabinet back down against a chair so that it will be about 30 degrees from the vertical position.

Assemble the spring, molded bushing, metal washer, and button in the order shown in Fig. 5. (Last three items may be in one unit). Push the button and spring assembly over the button shaft with the tab of the metal washer in the normal

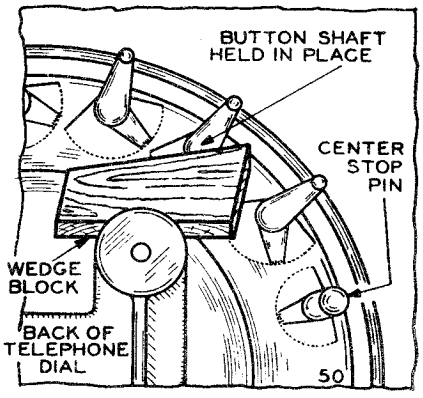

Fig. 4—Holding a Push Button Shaft in Place

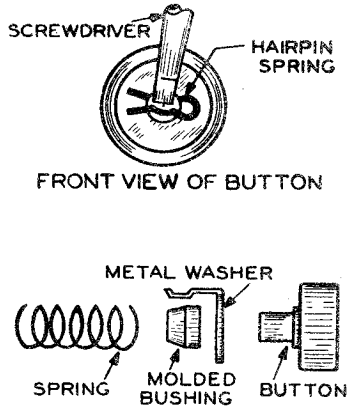

Fig. 5—Putting a Hair Spring on a Push Button Shaft

position—See illustration in instruction book. Hold the tab and rotate the button until the flat in the shank coincides with the flat on the shaft. Push the button all of the way on.

Put the hairpin spring in place, as shown in Fig. 5, with the upper part of the slot near the end of the button shaft and the lower part over the end of the shaft. Place the blade of a screwdriver at the center of the lower part of the spring and push down until the spring snaps into place in the slot on the shaft. Remove the wedge block.

©John F. Rider, Publisher

MODEL Phantom
Light Dial
Data, Parts List

WELLS-GARDNER & CO.

MODEL 17-Button
Telephone Dial

Telephone Dial Replacement Parts

See article "Identification of Dial and Chassis" in this manual in order to determine the correct dial and chassis assembly number.

The parts in the 3 lists shown below apply to the A1, A2, A3, A5, and A7 chassis unless otherwise specified.

DESCRIPTION	No. 9 DIAL PARTS		No. 11 DIAL PARTS		No. 10 DIAL PARTS	
	PART NO.	LIST PRICE	PART NO.	LIST PRICE	PART NO.	LIST PRICE
Pulley, Button Ring and Gang Cond. Assy. complete with Buttons, Dial Scale, Pointer, and Glass Crystal (A1, A2, A5, and A7 Chassis)	11A103	$23.20	11A121	$23.40	11A114	$25.50
Pulley, Button Ring, and Gang Condenser Assembly, as above (A3 Chassis)	11A111	24.60	11X120	25.00	11A113	27.00
Support Casting for above	25X368	1.35	25X368	1.35	25X410	1.45
Brace for above Casting (over Tuning Cond.) (A1, A2, A5, and A7 Chassis)	25X371	.15	25X371	.15	25X371	.15
Brace as above (A3 Chassis)	25X367	.20	25X367	.20	25X367	.20
Hex. Brass Stud (Support Bracket Mounting)	20X152	.04	20X152	.04	20X152	.04
Rubber Grommet for above Stud	6X8	.10	6X8	.10	6X8	.10
"L" Bracket—Rear Gang Mounting (A1, A2, A5, and A7 Chassis)	25X362	.08	25X362	.08	25X362	.08
"L" Bracket—Rear Gang Mounting (A3 Chassis)	25X382	.10	25X282	.10	25X382	.10
Stud (Rear Gang Mounting)	20X150	.08	20X150	.08	20X150	.08
Rubber Washer for Gang Mounting on "L" Bracket	2X236 doz.	.15	2X236 doz.	.15	2X236 doz.	.15
Rubber Grommet for Gang Mounting on "L" Bracket	6X16 doz.	.30	6X16 doz.	.30	6X16 doz.	.30
Rubber Cushions for Support Bracket (Front)	8X43	.10	8X43	.10	8X43	.10
Drive Cord Tension Spring	28X114 doz.	.35	28X114 doz.	.35	28X114 doz.	.35
Drive Cord	10X23	.65	10X23	.65	10X23	.65
Cord Tension Adjustment Assembly complete	26A59	.20	26A59	.20	26A59	.20
Drive Shaft only (Tuning)	26X245	.10	26X245	.10	26X245	.10
Front Brass Bearing Race and Drive Pulley for Drive Shaft	29X74	.10	29X74	.10	29X74	.10
Rear Brass Bearing Race for Drive Shaft	29X73	.15	29X73	.15	29X73	.15
8 Ball Bearings in Retainer (Two sets used on above Shaft)	20X151	.10	20X151	.10	20X151	.10
Horseshoe Washer for Drive Shaft	19X67 doz.	.15	19X67 doz.	.15	19X67 doz.	.15
Gate Assembly complete	25A154	.45	25A154	.45	25A154	.45
Spring only for Gate Assembly	28X45 doz.	.10	28X45 doz.	.10	28X45 doz.	.10
Condenser Drive Gear Assembly complete	25A153	.60	25A153	.60	25A153	.60
Gear Spreader Spring for above	28X102 doz.	.20	28X102 doz.	.20	28X102 doz.	.20
Pulley and Button Ring complete (Less Dial Crystal, Dial Crystal Escutcheon, Dial Scale, Dial Scale Washers, Dial Pointer and Stud, and Dial Lamps and Sockets)	26A61	11.50	26A62	11.50	26A62	11.50
Pulley Ring Casting only	25A162	3.20	25A162	3.20	25A162	3.20
Button Spacer Ring only	24X273	1.70	24X285	1.70	24X285	1.70
Silencer Contact Ring	30X79	.30	30X79	.30	30X79	.30
Push Button Assembly complete (Including Hairpin Spring, Button Spring, Push Button, Button Bushing, Button Shaft, Metal Washer and Tab)	26A63	.40	26A64	.40	26A64	.40
Push Button only	10A105	.10	10A111	.10	10A111	.10
Metal Washer and Tab	19X66	.10	19X66	.10	19X66	.10
Bakelite Bushing for Push Button	10A104	.10	10A104	.10	10A104	.10
Shaft for Push Buttons	26X238	.15	26X238	.15	26X238	.15
Hairpin Springs for Push Button Assembly	28X111 doz.	.10	28X111 doz.	.10	28X111 doz.	.10
Springs for Push Buttons	28X109 doz.	.10	28X126 doz.	.10	28X126 doz.	.10
Stop Pin Shaft Assembly (Behind Wide Spacer)	26A60	.30	26A60	.30	26A60	.30
Stop Pin Shaft	26X244	.25	26X244	.25	26X244	.25
Spring for above Stop Pin	28X112 doz.	.10	28X112 doz.	.10	28X112 doz.	.10
Dial Scale (Specify Type of Dial, Name of Radio, and Series or Model Number)		.55		.55		1.20
Washer, Dial Spacer (Large with rectangular hole)	19X74 doz.	.10	19X74 doz.	.10	19X74 doz.	.10
Washer, Dial Clamp (Small with round hole)	19X73 doz.	.10	19X73 doz.	.10	19X73 doz.	.10
Dial Pointer	15X95	.20	15X95	.20	15X95	.20
Dial Pointer Cap	15X96	.10	15X104	.10	15X104	.10
Dial Pointer Stud	20X171	.10	20X171	.10	20X171	.10
Glass Crystal	17X21	.15	17X21	.15	17X21	.15
Glass Crystal Escutcheon	4X174	.45	4X196	.40	4X184	.40
Dial Lamp Socket	7A62 ea.	.10	7A62 ea.	.10	7A62 ea.	.10
Dial Lamp Socket Assembly (3 Sockets) Less Lamps	7A63	.50	7A63	.50	7A63	.50
Dial Lamp (No. 51 Bayonet Type)	7A32	.20	7A32	.20	7A32	.20
Celluloid Dial Light Diffusers	41X16	.10	41X16	.10	41X14	.10
Silencer Contact Spring Assembly	26A57	.10	26A57	.10	26A57	.10
Complete Set of Station Call Letter Discs with 25 Celluloid Discs	26A56	.35	26A56	.35	26A56	.35
Tone Indicator Assembly (Less Dial Light Socket and Dial Lights, Take up Cord and Collar)					26A65	.35
Celluloid Indicator and Arm (Tone or Volume)					26A67	.20
Indicator Mounting Bracket (Tone)					25X407	.10
Spring for Tone or Volume Indicator					28X133 doz.	.60
Brass Collar, Cord Take up (Tone or Volume)					29X20 doz.	.10
3" Tone and Volume Indicator Cord						
Volume Indicator Assembly (Less Dial Light Socket, Dial Light, Take up Cord and Collar)					26A66	.35
Indicator Mounting Bracket (Volume)					25X408	.10
Call Letter Holder, Celluloid					58X254	.25
Brown Opaque Discs for Telephone Dial Buttons					58X217 doz.	.10
Dial Lamp Socket Assembly (For Tone or Volume Indicator)					7A57	.10
Paper Light Diffuser—Circular 4⅝" Diameter					41X22	.40
Complete Set of Station Call Letter Cards					26A58	.40
Blank Sheet of Call Letter Cards (Used for Export Sets Only)					58X240	.15

Prices Subject to Change Without Notice.

Phantom Light Dial Replacement Parts

See article "Identification of Dial and Chassis" in this manual in order to determine the correct dial and chassis assembly number.

The No. 3 Dial is used on the Series A1, A4, and A5 chassis. The No. 7 Dial is used on the Series A1 and A4 chassis only. The following parts are common to both groups unless otherwise specified.

DESCRIPTION	No. 3 DIAL PARTS		No. 7 DIAL PARTS	
DIAL ASSEMBLY	PART NO.	LIST PRICE	PART NO.	LIST PRICE
Dial Assembly, Complete with Dial Glass, Dial Assembly Mounting Plate, Brace, Support Bracket, Celluloid Dial Background, Indicator Tension Spring, Indicator Cords, Indicator Cord Takeup Collars, Side Reflectors, Lamp Sockets and Lamps, Fibre Strips, and Fibre Light Shield	Specify Type of Dial, Name on Dial or Escutcheon, Model or Series of Radio	$10.85	Specify Type of Dial, Name on Dial or Escutcheon, Model or Series of Radio	$10.70
Dial Glass Only (Series A1-A5)	See Above	.95	See Above	.80
Dial Glass Only (Series A4)	See Above	.95	See Above	.70
Celluloid Background for Dial (Series A1-A5)	58X206	.45	9X41	.40
Celluloid Background for Dial (Series A4)	58X206	.45	9X42	.40
Dial Assembly Mounting Plate with Tone & Volume Indicators, and Indicator Pulleys	25X381	.90	25X411	1.00
Dial Assembly Brace (Attached to Gang Condenser)	25X383	.10	25X383	.10
Fibre Strip (At Back of Tone and Volume Indicator Lamps)	11X58	.10	11X58	.10
Tension Spring for Tone and Volume Indicators	28X88	.10	28X88	.10
8" Black Cord for Indicators	doz.	.20	doz.	.20
Brass Collars with Set Screws—to secure Indicator Cords to Shafts	29X20 ea.	.10	29X20 ea.	.10
Dial Lamp Reflector (Right From Front)	41X18	.10	41X18	.10
Dial Lamp Reflector (Left From Front)	41X17	.10	41X17	.10
Dial Lamp Sockets and Clips (For Edge Lighting of Dial and Tone & Volume Indicators)	7A62	.10	7A62	.10
Dial Lamp Socket Assembly (4 Sockets) Less Lamps	7A64	.60	7A64	.60
Dial Lamp (No. 51 Bayonet Type)	7A32	.20	7A32	.20
Phantom Light Assembly Complete with Lamps (Series A1-A5)	25A164	1.65	25A164	1.65
Phantom Light Assembly Complete with Lamps (Series A4)	25A207	1.30	25A207	1.30
Springs for Lamps of Above Assembly	28X86 ea.	.10	28X86 ea.	.10
Brass Collars for Lamps of Above Assembly	19X61	.10	19X61	.10
Bracket (To secure Phantom Light Assembly to Drum)	25X360	.10	25X360	.10
Fibre Strip (At bottom of Dial Glass)	11X59	.10	11X59	.10

Prices Subject to Change Without Notice.

Phantom Light Dial - Replacing Drive Cord

Remove the dial assembly as follows: Take out the screw which secures the dial frame brace to the back of the gang condenser. Take out the two screws which secure the brackets on the bottom of the dial frame to the chassis. Lay the dial assembly face down in front of the chassis—it is not necessary to remove the volume control and tone control indicator cords.

Remove the phantom light assembly from the drive drum by taking out the screw.

Take off the old cord and tension spring. Tie a knot with a small loop in it in one end of the new cord. Then tie the other end of this cord to the hook on the tension spring. The distance from the loop on one end to the tension spring is 17¾ inches.

From the front of the chassis, place the looped end of the cord through the drum hole located near the cord track opening, and hook it over the hook provided for it at the back of the drum.

Bring the cord up and around the right side of the drum, keeping the cord in the grooved track of the drum.

Bring the cord down to the right side of the drive shaft and wind it three and one-third times around this shaft progressing toward the back.

Then bring the cord up and around the left side of the drive drum. Hook the tension spring on the hook of the drive drum.

Replace the phantom light and the dial assembly.

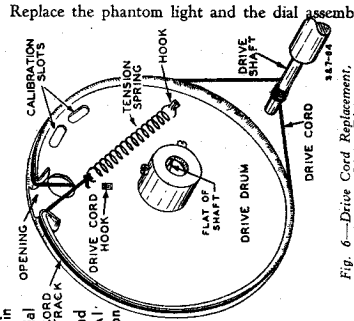

Fig. 6—Drive Cord Replacement, Phantom Light Dial

Phantom Light Dial Replacement Parts

See article "Identification of Dial and Chassis" in this manual in order to determine the correct dial and chassis assembly number.

The No. 3 Dial is used on the Series A1, A4, and A5 chassis. The No. 7 Dial is used on the Series A1 and A4 chassis only. The following parts are common to both groups unless otherwise specified.

DESCRIPTION	No. 3 DIAL PARTS		No. 7 DIAL PARTS	
DRIVE ASSEMBLY	PART NO.	LIST PRICE	PART NO.	LIST PRICE
Tuning Shaft Only	26X248	.15	26X248	.15
Tuning Drive Cord—20"	doz.	.45	doz.	.45
Tension Spring Above Cord	ea.	.10	ea.	.10
Drive Drum and Hub	28X27	.40	28X27	.40
Rubber Cushion (Front) for Assembly Mounting	24X279	.10	24X279	.10
Rubber Cushion (Rear)—Gang Mounting	8X43	.10	8X43	.10
Rubber Cushion (Rear—under Chassis)—Gang Mounting	8X44	.10	8X44	.10
Rear Mounting Foot for Gang Condenser	8X45	.10	8X45	.10
Support Bracket and Drive Shaft Bushing for Gang Condenser	25X283	.10	25X283	.10
	25X380	.45	25X380	.45

Prices Subject to Change Without Notice.

©John F. Rider, Publisher

MODELS 14,15,16
Electric Drive Dials
Service Notes

WELLS-GARDNER & CO.

This Supplements Series A1, A2, and A3 Service Manuals and covers the Electric Drive used with these Chassis.

ELECTRIC DRIVE PANEL ASSEMBLY

NOS. 14, 15, AND 16 DIALS

SEPT., 1937

Possible Troubles and Means of Correcting

The following list of possible troubles has been made up for your convenience in any servicing that may be required on the electric drive panel. Almost every condition that may be met with in the field is listed. A statement of the manner in which the difficulty may manifest itself and a brief statement of its cause and correction is made. In most cases, a reference is made to an illustration and a paragraph number in which the matter is discussed more fully. It may be necessary, occasionally, to read the entire article or a portion of it to fully understand the paragraph referred to. Undoubtedly very few of these manifestations will present themselves to the service man but it is our belief that any difficulty that may arise can be handled by the service man by referring to this manual.

A—If dial pointer reaches the end of the scale and stops.

1. The reversing switch does not operate properly—Adjust reversing switch and put on centering spring (early models).—Par. 185—Figs. 6 and 23.
2. Reversing switch or wiring defective—Replace switch or check wiring.—Par. 186, 193—Figs. 6 and 24.
3. (a) The stop lever does not go up into notch on setting disc far enough—Loosen set screws of setting disc corresponding to button which is depressed and adjust position of this disc relative to stop lever.—Par. 110—Figs. 10 and 15.
   (b) Stop lever spring may be too weak—Tighten spring.—Par. 110—Fig. 8.
4. Friction disc may slip in friction drive models or hub on gear No. 1 may slip on early gear drive models—Change friction drive panel to gear drive panel or replace faulty gear No. 1.—Par. 42, 62—Fig. 7.

B—After a tuning button has been depressed, the dial pointer goes back and forth without stopping.

1. Pawl on setting disc does not extend out far enough—Pinch into position.—Par. 102—Fig. 12.
2. Button may be set too close to the end of the dial pointer travel—Move drum in setting disc.—Par. 105, 106—Fig. 13.
3. Pawl stuck—See that pawl slides back freely.—Par. 104—Fig. 12.
4. Motor On-Off Switch may be stuck in On position—Adjust switch or release plunger.—Par. 135, 136—Figs. 8, 9, and 16.

C—If the dial pointer does not stop at the same point each time the tuning button is depressed. If this occurs on one button only.

1. Drum slipping in setting disc—Replace setting disc corresponding to that button.—Par. 93, 94—Figs. 10 and 11.
2. High spot on setting disc may move the stop lever sufficiently to break the switch contact—Adjust the motor on-off switch a slight amount or file down high spot on setting disc.—Par. 96—Fig. 9.
3. Set screws of setting disc loose—Tighten set screws.—Fig. 6.
4. Brake drum not perfectly round—Replace setting disc.—Par. 95—Figs. 10 and 11.
5. Motor On-Off switch does not open fast enough after station is reached due to stop lever being too low or high—Adjust height of stop lever or switch lever until proper On position is reached.—Par. 138—Figs. 6 and 9.
6. Tuning eye cable may be caught in setting disc—Remove cable from setting disc assembly.

If this occurs on all buttons.

1. Main drive cable loose—Tighten by means of turn-buckle.—Par. 147—Fig. 21.
2. Set screws in top pulley of main drive cable loose—Tighten these.—Par. 147—Fig. 6.
3. Spring clip on drive drum of tuning condenser may fit loosely on drive arm—Bend this clip to provide a tight grip.—Par. 61A—Fig. 7.
4. Silencer switch spring assembly may not have sufficient tension to push back the motor armature after the circuit is broken—Increase tension by bending the spring.—Par. 39—Figs. 4 and 5.
5. Faulty action of motor On-Off switch—Adjust switch and switch lever.—Par. 135, 136, 137, 138—Figs. 8, 9 and 16.

D—If, when a setting button is depressed, dial pointer does not move at all or does not move properly when tuning knob is turned.

1. The back of the setting button plunger does not engage the rocker arm—Line up the rocker arm with the back of the plunger by bending.—Par. 97, 98—Fig. 11.
2. The top of the rocker arm does not engage the operating lever which releases the drum of setting disc—Loosen the setting disc set screws and line up the disc with the rocker arm.—Par. 98—Fig. 11.
3. Clutch plate does not engage drive pulley—Bend clutch plate forward.—Par. 171—Fig. 6.
4. Setting button may not be pushed in sufficiently—Push button in further.—Fig. 11.

E—After a tuning button has been depressed, the manual tuning knob rotates while the motor is in operation.

1. Chassis may be too far forward in cabinet and prevent clutch release lever from returning to electric position—Move chassis back.—Par. 51, 172.
2. Electric-manual die cast lever arm does not turn freely on the clutch assembly bearing and does not return to electric position—Bend or file down bearing so that this lever turns freely.—Par. 172—Fig. 3.
3. Tuning knob put on shaft while lever is in manual position—Loosen this knob and put it on when lever is in electric position.—Par. 172, 176.
4. Clutch releasing spring broken or of insufficient tension—Put on new spring or increase tension of old spring.—Par. 172—Fig. 6.

F—Manual tuning knob turns with difficulty when tuning the radio manually.

1. Motor pinion jammed against gear No. 1—Pull motor away from gear.—Par. 44—Fig. 6.
2. Fibre gear No. 1 riding on washer of motor pinion—Change to new type pinion.—Par. 46—Fig. 6.
3. Motor pinion sticks on bearing—Change to new type pinion.—Par. 46—Fig. 6.
4. Clutch releasing spring does not turn freely—Bend this spring so that it rotates freely.—Par. 173—Fig. 6.

G—Jumpy action when tuning the radio manually.

1. Faulty friction drive in original issue panels—Change to gear drive panel.—Par. 42.
2. Silencer spring has not enough tension to disengage rotor from pinion—Readjust tension of silencer spring.—Par. 39—Figs. 4 and 5.

H—Excessive backlash when tuning the radio manually.

1. Loose set screws on drive drum on tuning condenser—Tighten these screws.—Par. 61A.
2. Compression springs in gears of train of gears missing or not set properly—Replace or reset springs in gears.—Par. 60—Fig. 7.
3. Take-up spring on gear No. 5 missing or anchorage point of this spring broken.—Par. 60—Fig. 7.
4. Spring clip on drive drum on tuning condenser fits loosely on drive arm—Tighten this clip.—Par. 22, 61A—Fig. 7.
5. Loose bearings on setting disc shaft—Tighten right hand bearing (from back of panel).—Par. 112—Fig. 6.

I—Drive belt slips when tuning the radio manually.

1. Excessive amount of oil on drive belt—Clean off oil.—Fig. 6.
2. Increase tension on drive belt by readjusting position of idler (early models only).—Fig. 6.
3. Main drive cable too tight—Loosen tension on main drive cable by means of turn-buckle.—Fig. 21.
4. (Early models only) Friction disc in motor binds—Change to gear drive panel.—Par. 42.
5. Motor pinion jammed against gear No. 1—Pull motor back from gear.—Par. 44—Fig. 3.
6. Motor pinion sticks on bearing—Put in new type pinion.—Par. 46—Fig. 6.
7. Gear train jammed—Free gears which are not working smoothly.—Par. 61—Fig. 7.

J—Electric-manual lever cannot be pushed to manual position.

Early Models Only

Bend yoke track away from clutch release lever until it engages yoke of clutch shaft properly.—Par. 174—Fig. 22.

Early and Late Models

1. One or more of the tuning button plungers has not returned to the normal position—Stretch tuning plunger spring.—Par. 111—Fig. 8.
2. Chassis too far forward in cabinet—Move chassis back.—Par. 51.
3. Locking plate screws loose—Turn down screws.—Par. 181—Fig. 3.

K—Electric-manual lever will not stay in the manual position.

The tip on the clutch release lever slot may be broken off or down too low—Return electric drive panel to factory for new clutch release lever.—Par. 175—Fig. 3.

L—Electric-manual lever cannot be pushed back into electric position from manual.

1. The tip on the clutch release lever slot may be too high—Cut or file off the end of this tip.—Par. 175—Fig. 3.
2. 4 washers which hold locking plate are tight—Loosen these washers.—Par. 180—Fig. 3.
3. Interlocking lever binds—Free lever.—Par. 175, 180—Fig. 3.
4. Clutch release lever binds—Free lever.—Par. 175—Fig. 3.

M—Electric-manual lever apparently has no effect on mechanism.

1. Pin of electric-manual lever casting is not in hole of clutch release lever—Remove manual tuning knob and place pin of electric-manual lever in hole of clutch release lever—Replace manual tuning knob—see instructions in Par. 176—Fig. 3.
2. Washer in front of clutch release lever loose from bearing—Return electric drive panel assembly to factory for replacement of this item.—Fig. 3.

N—Motor rotates but dial pointer does not move (early models only).

1. Friction disc in motor may slip—Change to gear drive panel.—Par. 42.
2. Fibre gear No. 1 may be slipping on its hub—Replace this gear.—Par. 62—Fig. 7.

O—Motor rotates when no button is depressed.

Plunger of motor On-Off switch sticks in On position—Release switch plunger.—Par. 135, 136—Figs. 8, 9, and 16.

P—After a tuning button has been depressed, the motor does not operate.

1. Motor On-Off switch out of adjustment—Readjust or replace switch.—Par. 135, 136, 137—Figs. 8, 9, and 16.
2. Motor pinion jammed against gear No. 1—Move motor away from gear.—Par. 44—Figs. 3 and 6.
3. Fibre gear No. 1 riding on washer of motor pinion Change to new type pinion.—Par. 46—Fig. 7.

©John F. Rider, Publisher

WELLS-GARDNER & CO.

MODELS 14,15,16
Electric Drive Dials
Notes, Changes
Replacement Data

4. (Early type drive cable) Cable slips—Turnbuckle take-up hitting top pulley or bottom idler—Return panel to factory for later type panel.—Par. 6.

Q—Excessive motor noise.

1. Chassis too far forward in cabinet and touching panel at some point—Move chassis back a slight amount by loosening wood support screws.—Par. 51.

2. Motor pinion chattering.
   (a) Silencer spring tension too great—Bend spring back to loosen tension.—Par. 40—Figs. 4 and 5.
   (b) Faulty pinion in motor—Replace pinion.
   (c) Pins on armature short or uneven so that they do not engage pinion properly—Replace motor.—Par. 49.
   (d) Motor bearing mounting clamps loose—Tighten these bearings or replace motor.—Par. 45.

R—After one tuning button has been depressed, pressing in another does not release the first nor permit the second to stay in.

Locking plate slightly distorted—Depress the first button again and then the second quickly.

This condition can be corrected by screwing in the locking plate screws in case they are out too far and by hitting the locking plate.—Par. 183—Fig. 3.

S—Tuning button does not push in easily or does not remain depressed.

1. Chassis may be too far forward in cabinet and prevent clutch release lever from returning to electric position—Move chassis back.—Par. 172.
2. Electric-manual die cast lever arm does not turn freely on the clutch assembly bearing and does not return to electric position—Bend or file down bearing so that clutch release lever turns freely. —Par. 172—Fig. 3.
3. (Applies only to buttons not pushing in easily) No grease on button shaft—Put some grease on shaft at point where it passes through locking plate. —Fig. 3.

T—Tuning button cannot be pushed all the way in.

1. Chassis too far back in cabinet—Move chassis forward but do not touch front panel.
2. Chassis too far forward in cabinet causing locking plate to contact cabinet—Move chassis back.—Par. 51.

U—If dial pointer does not move when tuning button is depressed.

(Early type friction drive only) Motor far enough away from gear No. 1 so that it does not engage friction disc—Move motor closer to friction disc. —Par. 6, 42.

V—Set dead.

1. Silencer switch shorted—Bend into proper position.—Par. 41—Figs. 4 and 5.
2. Armature tight in bearings and will not push back after switch is off—Free shaft in bearing or replace motor.—Par. 45—Fig. 5.

W—Signals can be heard with full volume between stations while tuning the radio electrically.

Silencer switch or silencer circuit open—Bend switch into position and check silencer circuit.—Par. 41—Figs. 4 and 5.

X—If creaking noise is heard on all buttons when tuning radio electrically.

Drive cable riding over itself on pulley B—Lay cable properly on this pulley.—Par. 158—Fig. 21.

Y—If setting disc stops in both directions of rotation.

Pawl spring may be missing or pawl stuck so that stop lever drops in notch in either direction of rotation.—Par. 104—Fig. 12.

Changes Since Early Models

(1) A number of changes in the electric drive assembly have been made in the course of production. The following listing summarizes these changes and identifies the chassis which have these changes.

Issue No. — Blank

(2) The issue number of the electric drive panel is stamped on the bracket over the motor switch—See Fig. 6. In the early models, no issue numbers were used.

(3) Early 7-tube sets may be identified by the fact that when the electric-manual lever is in the electric position, all four red mounting screws are located, as shown in Fig. 1.

(4) In case major trouble is experienced on the electric drive panel of these sets, it will be necessary to return the entire chassis or complete radio to the factory for reconditioning. Replacement panels cannot be satisfactorily mounted on these models.

(5) Early 9, 11, 13, and intermediate 7-tube sets may be identified by the fact that the two top red screws are in the position shown in Fig. 2. (This is also true of all subsequent models.)

(6) In case of major difficulty on the electric drive panel of these sets, which cannot be repaired locally, the panel can be removed from the chassis and returned to the factory for replacement.

(7) A number of changes were made during production of the early models which can be summarized as follows: A new type drive cable (Fig. 6) was used. A reversing switch centering spring (Fig. 23) was added. An improved type clutch release lever was used (Fig. 3). Nos. 2, 3, and 4 compound gears (Fig. 6) were changed to die castings. The reversing switch lever was modified and an improved rocker arm (Fig. 8) used which permitted greater movement of the setting button plunger. The mounting screw hole on the On-Off switch mounting was enlarged to facilitate adjustment. The clutch releasing spring (Par. 172) was added.

Issue No. 2

(8) All shipments made after August 23, 1937, incorporate the above changes and two additional major changes as follows: Originally a friction drive was used between the motor and the first gear of the train of gears. This friction drive was replaced with a gear drive (Fig. 6) starting with the No. 2 issue panels. A new method of stringing the main drive cable (Fig. 21) was also used in No. 2 panels. This new method is not applicable to the old drive cable.

(9) Almost any difficulty which may be encountered in these and subsequent issue number panels can be corrected in the field. The information contained in this manual will serve as a guide in making practically any repairs which may be required.

(10) In later No. 2 issue panels, a new reversing switch (Fig. 24) was used. A change was also made in the silencer spring, a heavier spring with silver contact being added.

Issue No. 3

(11) The guard was placed over the silencer spring assembly (Fig. 4) in panels with this issue number. A specially hardened motor pinion replaced the previous type. Rubber cushions were placed on the back of the cabinet panel to prevent the chassis from touching.

Issue No. 4

(12) A covering was placed over the reversing switch and an adjustment stud added to the base of the motor On-Off switch.

Replacing Electric Drive Panel on Chassis

(13) The electric drive panel assembly is the same for all chassis and may be removed from the chassis and replaced as explained below (the early 7-tube chassis as explained at the last part of this article, is an exception).

(14) Remove the chassis from the cabinet using extreme care not to damage the setting button shafts. Remove the electric tuning buttons by pushing down the lower end of the small hairpin spring at the back of the button and at the same time, pulling the button off the shaft. It is not necessary to remove the setting buttons.

(15) The screws in the wooden support behind the electric drive panel must be unscrewed and the support removed from the cabinet.

(16) Remove the speaker plug from the socket at the back of the chassis and also the tuning eye tube from its clamp bracket. Loosen the screw holding the bottom shield connection to the back of the chassis. Unscrew and remove the two "L" bolts (located under the chassis shelf) which are secured to the two rear chassis mounting feet.

(17) To remove the panel from the chassis, turn the electric-manual lever to the electric position. Unsolder the wire on the silencer switch on the front panel and also the motor connections under the chassis.

(18) Remove the dial pointer by pulling it off.

(19) Remove the dial scale bracket from the panel by taking out the two top screws and one bottom screw. Pull off dial lamp sockets and unhook clutch release lever tension spring.

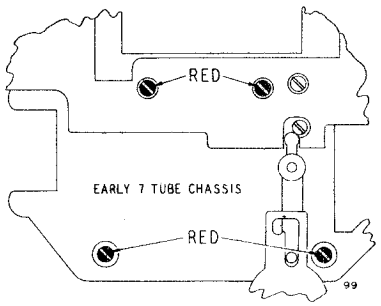

Fig. 1—Location of 4 Red Mounting Screws in Early Models

(20) Remove the four RED SCREWS shown in Figs. 1 and 2. DO NOT remove the screw on each side of the shaft extending through the center of the panel in the case of later models as shown in Fig. 2. *See special procedure at the last of this article for early 7-tube models.*

(21) The panel can then be pulled straight out from the chassis.

(22) To replace the assembly, reverse the above procedure. When mounting the panel, care must be taken that the drive arm (Fig. 6) on the drive gear and spring clip on gang condenser drive drum line up properly. To do this allow the front part of the chassis to project 2 or 3 inches over the edge of the table. Turn the gang condenser until the spring clip on the drive drum is at its lowest position. Spread this spring clip with a *small* screwdriver, bringing this screwdriver up from beneath the chassis. Care should be taken not to spread the spring clip too far. Turn the gears on the electric drive panel until the drive arm is at its lowest position. Gently push the drive arm into position in the spring clip on the drive drum. The screwdriver will drop to the floor.

(23) When installing a new replacement panel on a late model, the following points must be observed carefully:

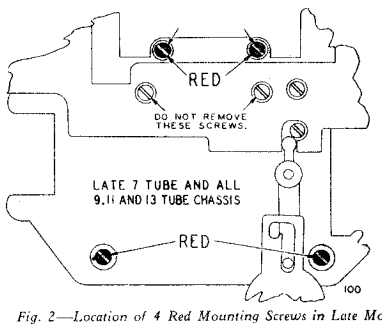

Fig. 2—Location of 4 Red Mounting Screws in Late Models

(24) MOUNTING SCREWS—Two screws with heads painted red are furnished with the new panel. These screws are longer than those used in the old panel and must be used in the TOP mounting holes only. The screws used on the old panel may be used in the two lower mounting holes of the new panel.

©John F. Rider, Publisher

MODELS 14,15,16
Electric Drive Dials
Motor Connections
Motor-Silencer Spring
Data

WELLS-GARDNER & CO.

(25) MOTOR CONNECTIONS—The motor cable assembly in the new panel has only two lead wires extending from it, while the old motor cable assembly has three. The third lead on the old cable assembly was connected to a condenser which is not necessary when the new drive assembly is used.

(26) The two leads from this condenser (metal shell, tubular type) to the terminal strips should be disconnected. The condenser can be left in the chassis, or it may be removed.

(27) One cable lead is soldered to the terminal strip lug to which is connected one wire of the power cord and one power transformer primary lead. The other cable lead is soldered to the terminal strip lug to which is also connected the lead from the On-Off switch and the other power transformer primary lead.

(28) CAUTION—When the electric drive panel is removed from the chassis, lay it face down and not back down. The reason for this is that there is a possibility that the motor On-Off switch on the back of the unit will be damaged or thrown out of adjustment.

(29) In handling the electric drive panel, do not carry it by the switch lever (See Fig. 6) which actuates the motor On-Off switch. This bar may be bent and damaged by such handling.

A New Electric Drive Panel Cannot Be Mounted on the Early 7-Tube Models

(30) These models may be identified by the fact that when the chassis is removed from the cabinet and the electric-manual lever is in the electric position all four red mounting screws are located as shown in Fig. 1. On late models, the two top red screws are in the position shown in Fig. 2.

(31) If trouble serious enough to require replacement of the electric drive panel develops in the early model radio, it will be necessary to send the entire chassis or the complete radio to the factory to have this done. A replacement panel should not be ordered as it cannot be mounted on the early type 7-tube chassis.

(32) The following procedure for removing the panel from early models is given only in case minor repairs are necessary.
(33) Unsolder wires and remove mounting screws. Pull the panel away from the chassis about ½ inch, being careful not to damage the steel cable. Then tilt the upper part of the panel toward the chassis. Lower the panel about ½ inch and slide it to the left so the steel cable will pass under the bracket. After the cable clears this bracket, the panel may be removed.

Motor and Silencer Spring Assembly

(34) The electric motor supplies the mechanical power for tuning in a station when an electric tuning button is depressed. A reversible AC motor is used. It is mounted to the electric drive panel by means of two screws. Power is transmitted to the rotating mechanism by means of a pinion gear on the armature shaft which meshes with the first gear of a train of gears.
(35) At the front of the motor is an assembly shown in Fig. 3 and known as the silencer spring assembly. This assembly has a two-fold purpose. First, it establishes a contact *while the motor is operating* which completes a circuit to the chassis ground that silences the radio. This circuit is shown in the schematic circuit diagram of the chassis manuals. Its second function is to exert a slight amount of spring tension on the end of the armature shaft which extends from the motor.

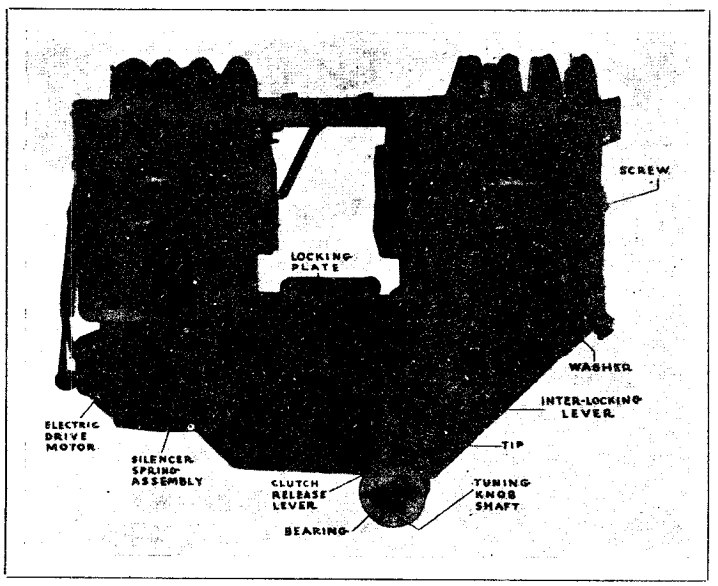

Fig. 3—Electric Drive Panel—Front View

(36) The small pinion gear inside of the motor rotates freely on the front motor bearing. This pinion is always in mesh with gear No. 1. There are two pins on the armature and two extensions on this pinion. The entire armature shaft assembly slides back and forth in its bearings.

(37) When the circuit through the motor is complete, magnetic action causes the armature shaft to slide toward the front of the panel. The force is strong enough to overcome the tendency of the silencer switch spring to prevent this movement.—Fig. 5.

(38) The pinion gear comes into close proximity with the armature and the two pins and two extensions mentioned above engage, causing this gear to rotate with the armature. The electric tuning mechanism turns as a result. When the circuit through the motor is broken, the magnetic pull on the armature is released and the silencer spring forces the armature toward the back of the panel, causing the pinion gear to disengage from the armature proper —Fig. 4.

(39) The tension of the silencer spring is of great importance. If the tension is insufficient it will not push back the armature shaft after the circuit is broken and the inertia of the motor will continue to exert a driving force on the train of gears. This will cause the tuning mechanism to go somewhat past the station after the setting disc has arrived at the stop position. The remedy is to tighten the spring by bending it.
(40) If the tension of the silencer spring is too great it will prevent the armature from moving forward when the circuit is completed and engaging the pinion gear. When this occurs the pinion will not turn at all or a chattering caused by the armature pins and pinion extensions will be heard. The remedy, of course, is to reduce the tension of the spring by bending.

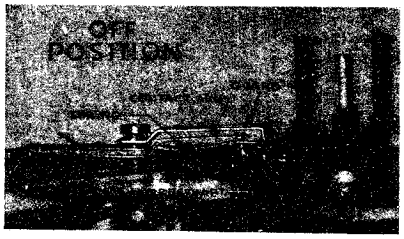

Fig. 4—Silencer Assembly—Off Position

Fig. 5—Silencer Assembly—Operating Position

(41) The contact and the spring of this assembly must close while the armature is in its operating position—otherwise the radio will not be silent between stations. Be sure that the assembly is not so bent that the contact and spring are permanently in contact. This condition would, of course, short out all signals.
(42) The early electric drive panels, those with no issue number on the switch bracket, used a friction drive between the motor and the first gear. A friction disc was used instead of the large toothed gear of gear assembly No. 1 shown in Fig. 7. This friction disc engaged a friction drive pinion on the motor. No. 2 and later issue panels all use the gear drive.

(43) There are several conditions under which the motor will not operate. External electrical faults, mainly open circuits, are discussed in other articles. Open windings within the motor will, of course, prevent its operation.

(44) If the motor is jammed against compound gear assembly No. 1 (see Fig. 6) it will not operate. The remedy is to loosen the two motor mounting screws (Fig. 6) slightly. Then insert a screwdriver between the upper right side of the bakelite motor case and the die cast frame at point "B" (Fig. 3). Turn the screwdriver to move the motor away from the frame and tighten the mounting screws. Care should be taken not to crack the bakelite case. In some cases it will be necessary to replace the top 8-32 screw with a 6-32 screw and nut in order to get proper spacing between the motor and the first gear.

(45) Tight bearings or a bent shaft will prevent motor operation. The remedy for tight bearings is to disassemble the motor, free and oil the bearings. In the case of a bent shaft a new motor will usually be required. On occasion, the bearing clamps may become loose—tighten the bearings or replace the motor.

(46) Still another item which prevents motor operation is the pinion gear jammed against the bearing. The bearing has a fillet or slightly rounded corner. Gear No. 1 pressing against the washer of the pinion gear may jam this gear against the bearing. Or, the pinion itself may jam against the bearing. In either case it will not turn. The remedy is to replace the pinion with a new type pinion that is rounded out to take care of the bearing fillet. One of these may be obtained at the factory.

(47) Jamming and tightness at various points of the rotating mechanism such as gears, belts, shafts and pulleys will cause an excessive load and prevent motor operation.

©John F. Rider, Publisher

WELLS-GARDNER & CO.

MODELS 14,15,16
Electric Drive Dials
Motor Notes,Part 2
Gear Train Data

(48) If the motor operates but does not drive the rotating mechanism, the following conditions may prevail: The early type friction drive disc may be slipping. The remedy is to replace the early friction electric drive panel with the gear type panel. In a few of the first sets incorporating the gear drive from the motor, the fibre gear of compound gear No. 1 (see Fig. 7) may slip on its hub. There is a spring washer which holds this gear to its hub and this washer may become too loose. The method of detecting this trouble and the correction of it are explained fully in the article "Train of Gears."

(49) Worn pins on the armature and worn projections on the pinion gear will prevent engaging of these two pieces. The silencer spring assembly may be too tight as explained above.

(50) If the motor runs only in one direction, check for a defective reversing switch or open wiring.

(51) If the electric drive panel or chassis comes in contact with the cabinet at any point, motor vibration will be transmitted to the cabinet and excessive noise will be heard while the motor is in operation. If the chassis is too far forward, it may touch at some point. There are 4 wood screws. 2 at each side of the wood support at the back of the electric drive panel. Unscrew these screws 2 or 3 turns or enough to pull the chassis back about ⅛ inch. This will prevent the electric panel from touching the cabinet. Do not pull the chassis too far back as this would prevent the buttons from being properly depressed.

Replacing Silencer Spring Assembly

(52) Unsolder the wire connected to the switch. Unscrew and remove the large brass screw at the center of the switch. All parts may now be removed from the front of the panel. Replace the assembly in the following order: Armature shaft spring, fibre strip, contact arm, fibre washer, guard, and brass screw. The guard is used on issue No. 3 or higher models only. Resolder the wire to the switch.

Replacing Motor

(53) Remove the drive panel from the chassis. It is not necessary to unsolder the silencer switch wire.

(54) Loosen the screws holding the cable clamps enough so that the cables to the reversing switch and the motor on-off switch can be removed. Unsolder the cable wires connected to the reversing switch, motor on-off switch and to the terminal strip under the chassis base. Save the varnished tubing and the wire connected between the motor on-off switch and the terminal strip under the chassis base. If the chassis is of the early type using the tubular condenser connected to the reversing switch, save this connecting wire also.

(55) Remove the two screws holding the motor to the support casting from the back of the panel. The motor and cable assembly can now be removed.

(56) To replace the motor, reverse the above procedure. The five leads from the motor are connected as shown in Fig. 24. Be sure to enclose these leads and the other lead from the motor on-off switch in the proper varnished tubing. If the chassis is of the early type using the tubular condenser connected to the reversing switch, run this lead wire through the proper varnished tubing.

(57) If, after the motor is replaced and all parts reassembled, the motor appears to be jammed as indicated by the manual tuning knob turning very hard with the electric-manual lever in the manual position, the following remedy should be tried.

(58) Loosen the two motor mounting screws slightly and move the motor away from gear No. 1 as explained in paragraph 44.

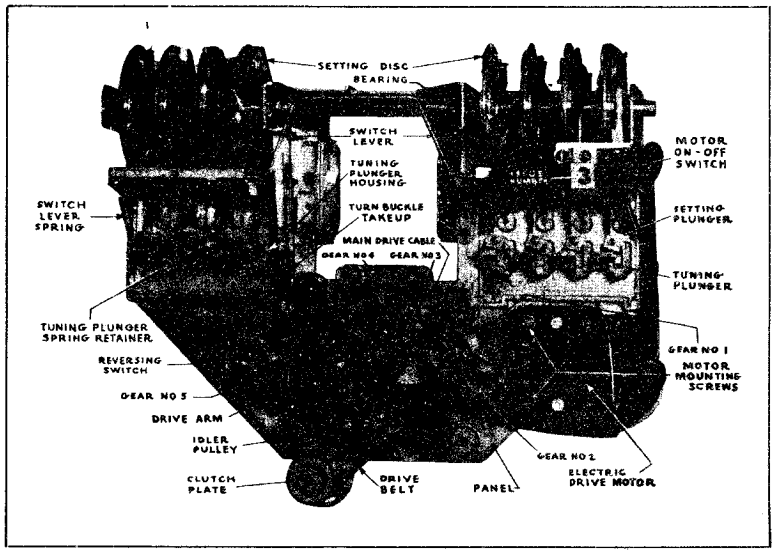

Fig. 6—Electric Drive Panel—Back View

Train of Gears

(59) The train of gears from the motor shown in Fig. 6 reduces the speed and increases the torque. It transmits power to gear No. 5, which drives the tuning condenser, and to gear No. 4, on the shaft of which is the setting disc cable pulley. Gear No. 2 is belt connected to the clutch assembly pulley—Fig. 6. The latter permits manual tuning of the radio and the manual setting of the buttons for electric operation.

(60) Gear assemblies Nos. 3 and 4 have compression springs between the fixed and movable gears of the assembly. Gear No. 5 has a takeup spring in front of it (from back of panel). All of these springs must be properly inserted to prevent backlash. The proper method of inserting the compression spring in gear assembly No. 3 is explained below.

(61) It is essential that the train of gears mesh properly and rotate freely. In case the gears are jammed, look for a foreign object caught between the gears or a compression spring partly out of the slot.

(61A) The drive arm on gear No. 5 should fit tightly in the spring clip on the tuning condenser drive drum. The drive drum is the drum secured by means of set screws at the front of the condenser shaft. Remove the panel and tighten the spring clip by bending, if it is loose. (See par. 22 for insertion of arm in clip.) If the set screws on the drive drum are loose, there will be backlash in tuning. These set screws can be reached and tightened from the bottom of the chassis with a thin blade screwdriver. Rotate the tuning condenser until first one and then the other of the screws is at the bottom.

Replacement of Gear No. 1

(62) In a few of the first sets incorporating the gear drive from the motor, the fibre gear of compound gear No. 1 (See Fig. 7) may slip on its hub. There is a spring washer which holds this gear to its hub and this washer may become too loose. When this occurs, the large fibre gear will be seen to rotate while the hub and small metal pinion gear which engages with gear No. 2, remains stationary.

(63) In a case of this kind, compound gear No. 1 must be replaced. In the later type, the metal hub is rigidly secured to the fibre gear. Following is the replacement procedure:

(64) Remove electric panel assembly from chassis and lay it face down on the bench.

(65) Remove belt and idler pulley—See Fig. 7.

(66) Refer to turn-buckle take-up on steel drive cable—See Fig. 7. Observe position of hex nut on the stud of this turn-buckle, that is, see how many threads this nut is from the end of the stud.

(67) Loosen the main drive cable by loosening the hex nut on turn-buckle and backing off the round knurled nut about 5 half turns.

(68) Remove horseshoe washer from gear Nos. 1 and 2, spreading the horseshoe washers by means of long nose pliers and screwdriver.

(69) Take out the 2 motor mounting screws and lift the motor out of place—See Fig. 7.

(70) Lift up the main drive cable to clear the teeth at the top of gear No. 2—take care not to nick the cable.

(71) Remove gear Nos. 2 and 1.

(72) Put the new fibre tooth gear No. 1 on the shaft and replace horseshoe washer.

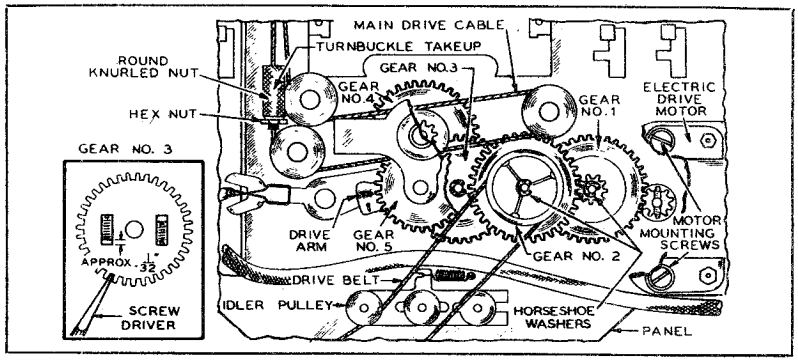

Fig. 7—Replacement of Gear No. 1

©John F. Rider, Publisher

MODELS 14,15,16
Electric Drive Dials
Discs and Buttons
Adjustments, Part 1

WELLS-GARDNER & CO.

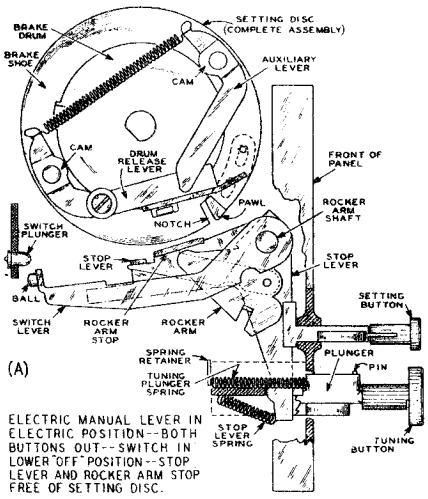

Fig. 8—Setting Disc—Off Position

(73) Now refer to gear assembly No. 3—See Fig. 7. The top gear of this assembly is movable and the bottom gear is fixed. Rotate the top gear one tooth clockwise relative to the bottom gear and hold the two in this position with a screwdriver as illustrated.

(74) Slide gear No. 2 on its shaft, pulling the main drive cable over the top of the teeth—again care must be taken not to nick the cable.

(75) Push gear No. 2 all the way on its shaft, engaging gear Nos. 1 and 3. Replace the horseshoe washers.

(76) Check for take-up on gear No. 3. Approximately 1/32 inch of the fixed gear (bottom) will show through slot in top gear—See Fig. 7.

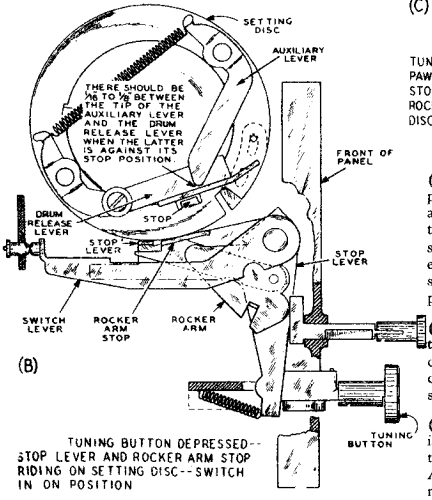

Fig. 9—Setting Disc—On Position, Stop Lever on Edge of Disc

(77) Reassemble motor to frame, pushing tension spring under motor shaft. Be sure to use the same screws to mount the motor to the frame that were taken off. Care must be taken that the pinion gear in the motor meshes properly with the teeth of fibre gear No. 1. If these two gears appear to be so close together that they bind, pull the motor away from gear No. 1 before tightening the mounting screws.

(78) Replace belt and idler pulley.

(79) Retighten turn-buckle on main drive cable bringing hex nut to its former position and round knurled nut down tight against hex nut washer.

(80) Reassemble electric drive panel to chassis.

Setting Discs, Tuning and Setting Buttons, and Associated Levers

(81) The setting discs, tuning and setting buttons, and the levers immediately below the discs, provide a stop position by means of which the electric circuit through the motor can be broken and a mechanical stop provided when a predetermined station has been tuned in.

(82) The essential movements are illustrated in Figs. 8, 9, 10, and 11. The actions of the reversing switch, motor switch, locking plate and clutch, tie in closely with this procedure but are more fully explained in separate articles under those names.

(83) Referring to Fig. 8, the electric-manual lever has been thrown to the electric position. Both the tuning and setting buttons are out. The stop lever and rocker arm stop are in line and free of the setting disc.

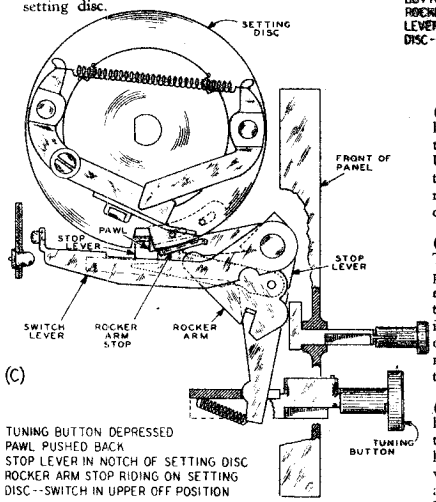

Fig. 10—Setting Disc—Stop Lever in Notch

(84) In Fig. 9, the tuning button has been depressed. The bottom part of the stop lever (portion adjacent to plungers) has been pulled over so that the top part of the stop lever and the rocker arm stop are riding on the edge of the setting disc. The extreme back portion of the stop lever has lifted the switch lever, bringing the motor switch to the On position.

(85) With the motor switch in the On position, the motor drives the train of gears and the setting discs rotate. Now refer to the pawl on the setting disc (Fig. 8), which partially covers the notch in the setting disc.

(86) The purpose of the pawl on the setting disc is to permit the stop lever to fall into the notch in the setting disc in only one direction of rotation. All stations are tuned in, therefore, with the rotating mechanism moving in one direction of rotation. All cable slack and play in gears is taken up in the same direction. If, when stations are set, the tuning knob is turned in this same direction as covered in the instructions, the stations will be tuned in very accurately by the electric tuning mechanism.

(87) Now refer again to the rotating setting disc. Let us say that the direction of rotation is such that the stop lever rides over the pawl and does not drop into the notch. Just before the tuning condenser has reached the end of its travel, the pin on the No. 4 gear assembly casting (Fig. 6) throws the reversing switch lever and the motor changes its direction of rotation. When the pawl reaches the stop lever, the latter will engage the tip of the pawl which extends just beyond the edge of the setting disc, causing the pawl to slide over, opening the notch in the setting disc. The stop lever falls into this notch.

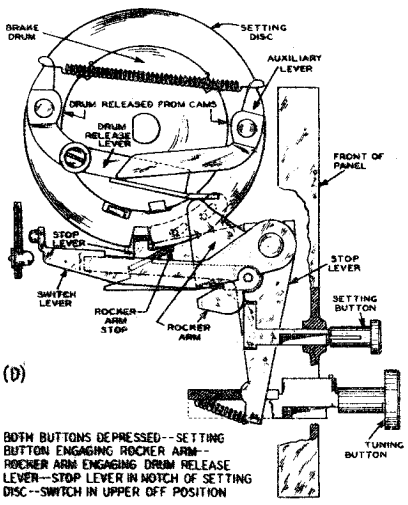

Fig. 11—Setting Disc—Setting Button Depressed

(88) Referring to Fig. 10, the entry of the stop lever into the notch on the setting disc has raised the switch lever until the motor switch is in the Upper Off position. The motor stops and the setting disc is held by the stop lever in the notch. The rocker arm stop still rides on the edge of the setting disc and is no longer lined up with the stop lever.

(89) In Fig. 11, the setting button is depressed. The rocker arm stop, moves toward the back and permits the rocker arm to lift the end of the drum release lever of the setting disc. As will be seen in the illustration, the drum release lever lifts the auxiliary lever and the cams of these two levers move off of the brake drum. This allows the drum to rotate inside of the brake shoes (Fig. 8) or outer portion of the setting disc.

(90) The rocker arm can engage the drum release lever only when the rocker arm stop can move toward the back, and this can be done only when the stop lever is in the notch of the setting disc. It is only when the stop lever is in the notch that the rocker arm can engage the drum release lever properly. That is why in all other positions of the stop lever the latter is lined up with the rocker arm stop and prevents the rocker arm from moving upward.

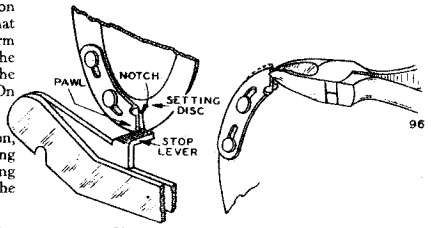

Fig. 12—Pinching Pawl of Setting Disc

(91) When the setting button was depressed, the plunger of this button working against the locking plate (Fig. 3) moved this plate over sufficiently to engage the clutch. Now when the manual tuning knob is turned, the setting discs, except the one which has its setting button depressed, will rotate. The brake drum of the setting disc which we are discussing and which has its setting button depressed, will also rotate, but the brake shoe, or outer portion, remains stationary (Fig. 11). When the station is tuned in, the setting button is released and this causes the cams of the drum release lever and auxiliary levers to bear down on the brake drum, holding this drum firmly in position.

(92) Throwing the electric-manual lever to the manual position will lower the switch lever to the Lower Off position—See Fig. 8. Pushing in another tuning button will release the tuning button we have discussed and bring the tuning button mechanism of the button which is depressed to the position shown in Fig. 9.

©John F. Rider, Publisher

Adjustments, Part 2
Replacements

WELLS-GARDNER & CO.

MODELS 14,15,16
Electric Drive Dials
Discs and Buttons

Adjustments

(93) The cams must be tight against the brake drum of the setting disc (Fig. 8) otherwise this drum will slip and the dial pointer will not stop at the proper point. In Fig. 9 is shown the proper distance between the end of the auxiliary lever and the drum release lever bar when the latter is against its stop. If this spacing is not correct, the cams will not grip and release properly. A new setting disc will be required in this case.

(94) If the rivets which hold the drum release lever and the auxiliary lever are loose, the cams will not close down tightly on the brake drum. Tighten these rivets or replace the entire setting disc.

(95) A brake drum which is not perfectly round will not be gripped properly by the cams of the auxiliary and drum release lever. A new setting disc will also be required in this case.

(96) A high spot on the outer edge of the setting disc may cause the stop lever to move sufficiently to break the motor switch contact. File down the setting disc or adjust the motor switch if this occurs.

(97) If the rocker arm is bent, it may not engage the back of the setting button plunger as shown in Fig. 11.

(98) Bend the rocker arm to the proper position. The rocker arm may, instead of engaging the drum release lever, come between this lever and the brake drum of the setting disc. Correct this condition by bending the rocker arm and by shifting the position of the setting disc on the shaft.—See Par. 128.

(99) As explained above, when the setting disc rotates, the stop lever will pass over the pawl in one direction of rotation. In the other direction of rotation the stop lever will engage the tip end of the pawl, cause the pawl to slide over and permit the stop lever to fall into the notch of the setting disc.

(100) If the tip end of the pawl does not extend a sufficient amount beyond the outer edge of the setting disc, this action will not take place and the setting disc will rotate beyond the stop lever in either direction of rotation.

(101) Should this faulty condition exist on one of the setting discs, whenever the electric tuning button corresponding to this disc is depressed, the dial pointer will continue to move back and forth without stopping.

(102) This condition is easily corrected as follows: Using a pair of side cutters, grip the tip of the pawl as shown in Fig. 12 about 1/32 inch from the edge. Pinch firmly and push outward (away from the center of setting disc). Do this until the tip of the pawl is a little more than 1/64 inch beyond the outer edge of the setting disc.

(103) After this procedure has been followed, depress the setting button corresponding to this setting disc and see whether the stop lever edge engages the pawl properly.

(104) If the pawl spring is missing, the stop lever can drop into the notch of the setting disc in both directions of rotation. This same condition can take place if the pawl should stick in the open position. If the pawl should stick in the closed position, the setting disc will continue to rotate, first in one direction and then the other without stopping. The remedy is to free the pawl so that it slides back easily. Do this by loosening the rivet with a screwdriver.

(105) It is not advisable to set a station close to the end of the dial pointer travel, at the point where the reversing switch operates. If, when a setting button is depressed you should turn the tuning knob too far, a click will be heard near the end of the dial pointer travel. Then, whenever THIS electric tuning button is depressed, the dial pointer will continue to move back and forth without stopping.

(106) This condition is easily corrected as follows: Turn the electric-manual lever to the manual position. Then turn the tuning knob and observe the setting disc corresponding to the button on which the above condition takes place. Stop turning the knob when disc is in position shown in Fig. 13.

(107) Then with the flat end of a long pencil or thin piece of wood, carefully depress the drum release lever (Fig. 13) and rotate the setting disc about one inch in the direction shown by the arrow.

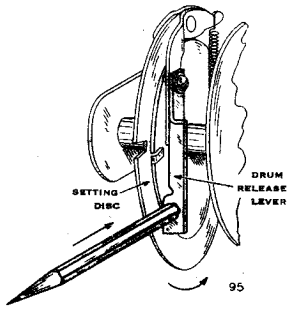

Fig. 13—Adjusting Position of Brake Drum

Do not use a metal rod or the pointed end of the pencil. The setting disc will turn readily after the drum release lever has been depressed.

(108) This will correct the condition, the stations may be set, and the radio operated in the usual manner.

(109) Of course, when tuning in a station manually, as explained in the instruction book, you can tune to the extreme end of the dial pointer travel without the above condition taking place.

(110) The stop lever may not enter far enough into the notch in the setting disc due to the setting disc being at the incorrect position on the shaft (See Par. 129) or the stop lever spring (Fig. 8) may be of insufficient tension to force this lever into the notch. In a case of this kind, the brake shoe (Fig. 8) stops while the brake drum continues to rotate with the motor. The motor has sufficient power through the gears to rotate the brake drum even though the cams (Fig. 8) have not been released. When the end of the dial scale is reached, the thump of the reversing switch is usually sufficient to force the stop lever into the notch sufficiently to throw the motor switch to the Off position. The remedy is to loosen the setting disc set screws and move the disc to the correct position—See Fig. 15—Par. 129. If the main drive cable has been stretched, take up the slack by means of the turn-buckle take-up (Fig. 21). If the stop lever spring (Fig. 8) was responsible for the above condition, tighten this spring.

(111) If the tuning plunger spring (Fig. 8) is weak, it will not return the tuning button to its normal position and it will not be possible to push the electric-manual lever to the manual position as the movement of the locking plate will be prevented. The remedy is to stretch the tuning plunger spring. This can be removed and replaced as explained in the article on replacement of the tuning button plunger.

(112) Backlash may be caused by loose bearings in the setting disc shaft. This may be corrected as follows: Loosen the set screw in the right bearing (from back of panel). Location of this bearing is shown in Fig. 6. Grasp the setting disc shaft at the center and pull toward the left. Push the bearing toward the right and tighten the set screw.

Replacing an Electric Tuning Button Plunger

(113) Remove electric drive panel from the chassis and mount it in a vertical position by means of clamps or a vise. Turn the clutch release lever to the electric position.

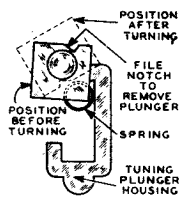

Fig. 14—Tuning Plunger Spring Retainer

(114) Remove the pin from the front of the button plunger—See Fig. 8—by pulling it out. If this cannot be done file the pin flush with the plunger. Unhook the stop lever spring from the back end of the button.

(115) File a V shaped notch in the rectangular spring retainer at the back of the tuning plunger housing—See Fig. 14. The location of the notch is illustrated. Then turn the spring retainer to the position shown in this illustration with the notch at the upper left corner of the housing. When this is done the spring in the housing will spring out. Then push the plunger out from the front of the panel.

(116) To replace the plunger push it into the housing from the back at the same time moving the clutch release lever slowly toward the manual position until the plunger slides all the way into place.

(117) Replace the spring in the plunger housing depressing it and at the same time moving the spring retainer into position to hold the spring in place. Hook the stop lever spring to the back of the plunger.

(118) Insert the smooth end of the new stop pin in the hole in the front of the shaft, forcing it in by squeezing with pliers. Caution—Leave about 1/16 inch of the pin extending above the surface of the plunger.

(119) Replace the electric drive panel on the chassis.

Replacing a Setting Button Plunger

(120) It is advisable to remove the electric drive panel from the chassis and mount it in a vertical position by means of clamps or a vise. Turn the clutch release lever to the manual position.

(121) Remove the switch lever as explained in the article "Replacing Switch Lever."

(122) Move the rocker arm shaft to the left or right, as necessary, to allow the stop lever and rocker arm above the setting button plunger to be taken off from the rocker arm shaft. After these are removed the setting button plunger may be pushed out from the front of the panel.

(123) Replace the new plunger from the back of the panel and reassemble rocker arm and stop lever to the rocker arm shaft.

(124) Reassemble the switch lever and replace the electric drive panel on the chassis.

Replacing a Setting Disc

(125) Turn the clutch release lever to the manual position.

(126) Remove the support bracket at either end of the setting disc shaft by taking out the two screws holding it in place. The bracket to be removed depends upon which side of the center of the panel the setting disc to be replaced is located.

(127) Unscrew the two set screws in the hub of the disc. If the disc to be replaced is any other than the end one, all discs from the end of the shaft to the one being replaced must also be removed.

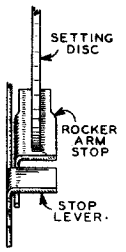

Fig. 15—Positioning Setting Disc

(128) When replacing the disc, it must be placed on the shaft with the hub toward the left (from back). The edge of the setting disc should be directly over the middle of the rocker arm stop—See Fig. 15.

(129) If the disc is set too far to the right (from the back) a condition may exist in which a station cannot be set because the rocker arm will not engage the drum release lever. If the disc is set too far to the left, the pawl will prevent the stop lever from falling far enough into the notch in the setting disc to operate the switch lever although the setting disc is stopped.

©John F. Rider, Publisher

MODELS 14,15,16
Electric Drive Dials
Motor Switch,Drive Cable
Data

WELLS-GARDNER & CO.

Motor On-Off Switch and Switch Lever

(130) The function of the motor On-Off switch is to complete the electric circuit through the motor when an electric tuning button is depressed and to break the circuit at the proper instant when the station has been tuned in by the rotating mechanism.

(131) The essential parts of the switch, see Figs. 8 and 16, are an insulated base, two contacts, one fixed and the other on a movable reed, and a plunger. The latter, when pushed in, causes the movable reed to bend until the contact which is on it, touches the fixed contact. When the plunger is out the reed bends back and the two contacts separate.

(132) There are three positions of the switch known as the Upper Off, the On and the Lower Off position.

(133) These positions are illustrated in Figs. 8, 9, and 10. As will be seen in Fig. 9, the switch is in the On position when the ball on the switch lever moves against the rounded outside face of the plunger and forces it inward.

(134) The proper operation of the switch depends on the correct relative position of the switch plunger and the ball on the switch lever.

(135) The bakelite switch base should be parallel with the switch lever as shown in Fig. 16. If the switch base is further out the plunger may not be pushed in sufficiently to throw the switch to the On position and if the base is too close the ball may jam against the plunger instead of the two rounded surfaces of these items engaging properly. Bend the switch base in or out until proper interaction is obtained. (In issue No. 4 and later panels there is an adjustment screw for this purpose.)

(136) The plunger on the switch base and the ball on the switch arm must also be at the correct height relative to each other. The ball should line up with the plunger when one of the tuning buttons is depressed and the stop lever is riding on the edge of the setting disc—See Fig. 9. From this On position there should be an approximately equal throw of the switch lever to either the Upper or Lower Off positions—See Figs. 8 and 10.

(137) To adjust the height, loosen the two screws which hold the switch base in place. Grasp the bakelite switch base at the left side (from back of panel) and raise or lower it.

(138) In some cases bending of the switch lever at either side may also be required. The switch lever should rest on or be very close to all eight of the stop lever extensions when no tuning button is depressed. Push in each of the tuning buttons, one at a time and see if the ball on the switch lever lines up with the switch plunger in the On position (Fig. 9).

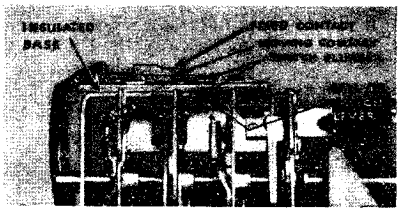

Fig. 16—Motor On-Off Switch—Top View

Replacing Motor On-Off Switch

(139) If the switch mechanism is broken or cannot be put in proper working order, a new one may be ordered. The old switch is removed by taking out the 2 screws which hold it in place and unsoldering the 2 switch leads.

Replacing Switch Lever

(140) The switch lever (Fig. 6) consists of three distinct sections—a center section, left section, and right section (from back of panel). Each section may be replaced separately.

(141) Turn the clutch release lever to the manual position. All the following operations are performed from the back of the panel.

(142) **CENTER SECTION**—To remove this section, take out the screws at each end and lift the section off. When replacing this section, the end with the cutout portion must be on the right side.

(143) **LEFT SECTION**—Unhook the switch lever spring from the left side of the lever. Remove the horseshoe washer from the left end of the rocker arm shaft. Push shaft toward right side far enough so that the horseshoe washer on the right end of the shaft is accessible. Remove this washer. Then lift the left end of the switch lever high enough so that the rocker arm shaft will slide under the lever when the shaft is pushed toward the left. Push the shaft toward the left far enough to allow the right end of the lever to slip off the shaft. To replace this section, reverse the above procedure.

(144) **RIGHT SECTION**—Unhook the switch lever spring from the right side of the lever. Remove the horseshoe washers from the ends of the rocker arm shaft. Push the shaft to the right enough to allow the left end of the lever to be lifted. Then push the shaft to the left enough to allow the right end of the lever to slip off the shaft. To replace this section, reverse the above procedure.

Replacement

(148) **EARLY MODEL CABLE**—Early electric drive panels, those without an issue number on the switch bracket, used a different drive cable than the one shown in Fig. 21. If the cable breaks on these models, do not attempt to restring the cable. Instead, the electric drive panel will have to be returned to the factory to have this done.

(149) **LATER MODEL CABLE**—These may be identified by the issue No. 2 or higher number stamped on the switch bracket. Should cable restringing be required in the case of the later type, this can readily be accomplished by ordering a new drive cable, if one is necessary, and putting it on in accordance with the following instructions:

(150) Remove electric drive panel from chassis.

(151) Remove the old drive cable. It will have to be unsoldered at pulleys B and E—See Fig. 21. Turn clutch release lever to manual position.

(152) From the front of the panel, turn manual tuning knob to the right (clockwise) as far as it will go. This will bring the drive arm on gear No. 5 to the left (from back of panel)—See Fig. 7.

(153) Now support the panel in such a manner that it is held firmly in an upright position, the back of the panel toward the operator. The bottom of the casting can be gripped at a number of points in a vise or clamp—care should be taken not to distort the casting.

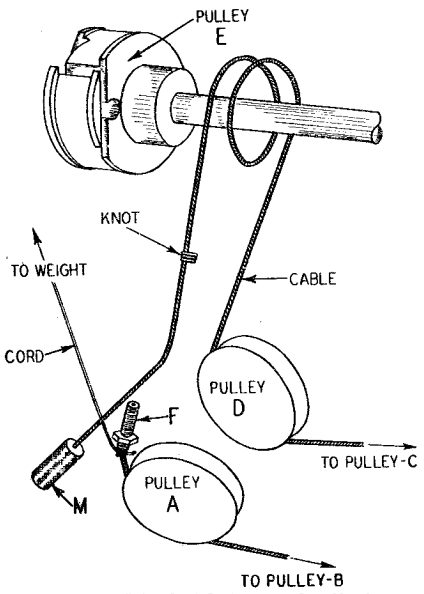

Fig. 18—Drive Cord Replacement—Step No. 2

(154) Referring to the new drive cable, it will be noted that one end has a screw fitting and the other end has a round knurled nut fitting. These two fittings together with the hex nut and lock washer comprise the turn-buckle take-up.

(155) With screw end F (Fig. 17) hanging down, place the cable into the vertical slot at the back of pulley B with the knot inside of the opening at point G.

(156) Then wind the screw end of the cable on pulley B in a clockwise direction one turn, passing over the portion of this cable which is in slot H.

Main Drive Cable

(145) The function of the main drive cable is to rotate the setting discs in conjunction with the train of gears and keep the rotation at a definite fixed position in relation to the rotational position of the drive gears. The cable is rigidly secured to a pulley on the shaft of gear No. 4 and passes over a series of other pulleys to a pulley on the setting disc shaft where it is also rigidly secured.

(146) It is important that this cable ride freely over all pulleys and with all slack taken out. The turn-buckle take-up, as shown in Fig. 21, is provided to take up slack.

(147) If the drive cable is loose the dial pointer will not stop at the same point each time a tuning button is depressed, because of the lack of fixed relation between the setting discs and the drive gears. Take up the slack by means of the turn-buckle. Loose set screws on the top pulley of this cable will also bring about this same condition. Tighten these screws.

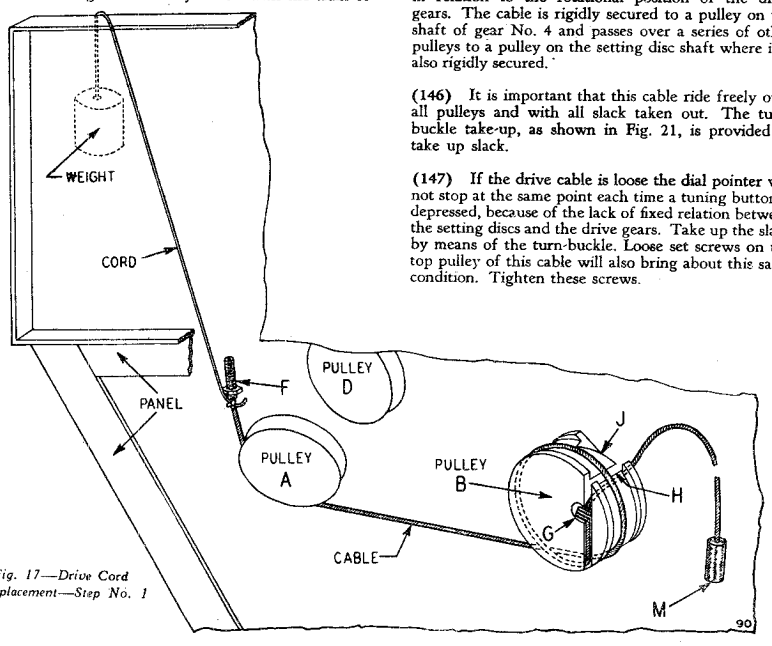

Fig. 17—Drive Cord Replacement—Step No. 1

©John F. Rider, Publisher

Clutch Assembly and Electric Manual Lever Notes

WELLS-GARDNER & CO.

MODELS 14,15,16
Electric Drive Dials
Cable Data,Part 2

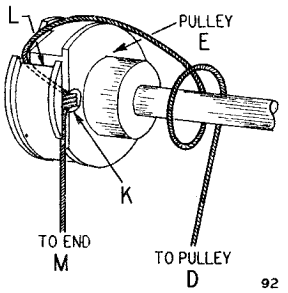

Fig. 19—Drive Cord Replacement—Step No. 3

(157) Bring the screw end of the cable over to pulley A and hold it in this position. This can be done by fastening a 10 inch stout cord to the end of cable F. Attach a weight to the other end of this cord and let the weight hang over the top of the panel as shown in Fig. 17. Instead of a stout cord, the round knurled nut and old cable can be secured to the screw end of the new cable.

(158) Now refer to the portion of the cable that is in the slot at point H pulley B. Using a small wooden prod, bend this cable and bring it back onto pulley B at groove J. CAUTION: Do not use a metal prod as this may damage the cable. It is important that the cable at groove J be kept close to the front flange of pulley B (flange nearest panel) while the portion of the cable which extends downward from point G be kept close to the back flange of this pulley so that the cable from pulley A will ride freely in the center of pulley B—as shown in Fig. 21.

(159) Then from groove J bring the cable in a counterclockwise direction ½ turn around pulley B, over to pulley C, ½ turn around pulley C, over to the bottom of pulley D, and then up to the shaft at the right of pulley E—Be sure the cable is well down in slot H, pulley B.

(160) Wind the cable LOOSELY one and one-half turns around this shaft, progressing toward the left as shown in Fig. 18.

(161) Rotate the setting discs until pulley E is approximately in the position shown in Fig. 19 Using a thin wooden prod, place cable in slot L with knot in hole at point K of pulley E. Rotate the setting discs a slight amount back and forth. This will provide clearance while getting the cable in the slot. Push the cable well down into slot L—See Fig. 19.

(162) Rotate the setting discs ¾ of a complete revolution in such a direction that the top of the discs move toward the front of the panel. Bring the round knurled nut under the loop of the cable as shown in Fig. 20.

(163) Place cable from pulley D on pulley E at left flange (from back of panel). Now holding cable from pulley D, rotate setting discs in such a direction that the top of the discs move away from the front of the panel. Rotate the discs approximately ¾ of a turn or until the slack in the cable from pulley D is all taken up. Pulley E and the cable will then be in the position shown in Fig. 21 and the knurled nut end M of the cable will be hanging down from pulley E and must be held in tension.

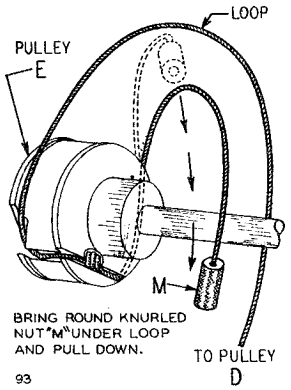

Fig. 20—Drive Cord Replacement—Step No. 4

(164) The next step is to connect the two portions of the turn-buckle together. Before doing this, see that the cable is on all of the pulleys as shown in Fig. 21. Tension should still be applied to both ends of the cable.

(165) Remove weight and cord (or round nut) from screw end F of the cable. Put the lock washer against the hex nut on this cable. Screw round knurled nut onto screw end of cable. While this is being done, the setting discs should be grasped by another person and rotated as far as they will go in such a direction that the top of the discs moves away from the front of the panel. The purpose of this is to take up all slack in the cable and to enable the two ends of the turn-buckle to be secured together.

(166) The cable must be firm and with all slack out. It should not be so tight, however, that the setting discs and pulleys do not turn freely. Tension of the cable is regulated by the position of the hex nut. The round knurled nut must be screwed tightly against the lock washer next to the hex nut.

(167) Solder knots at points G and K on pulleys B and E respectively. Reassemble the electric drive panel to chassis.

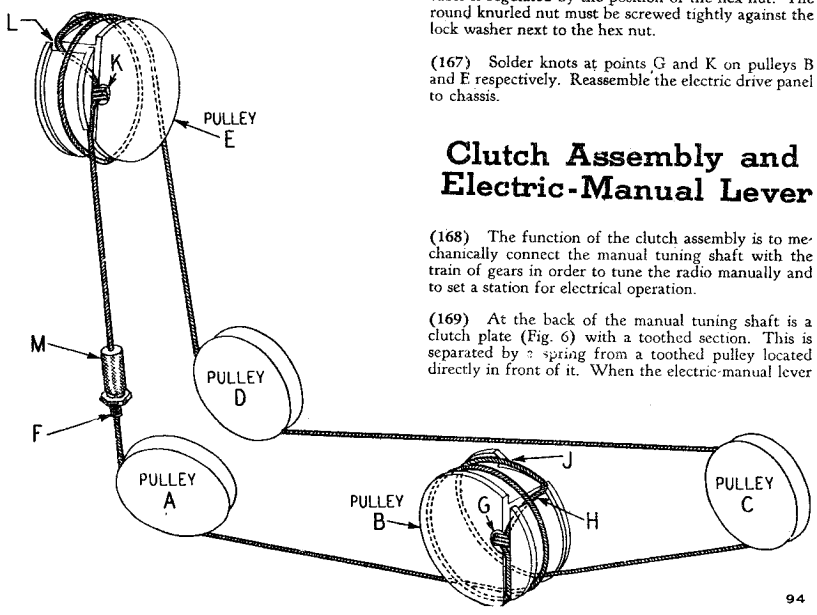

Fig. 21—Drive Cord Replacement—Complete Assembly

Clutch Assembly and Electric-Manual Lever

(168) The function of the clutch assembly is to mechanically connect the manual tuning shaft with the train of gears in order to tune the radio manually and to set a station for electrical operation.

(169) At the back of the manual tuning shaft is a clutch plate (Fig. 6) with a toothed section. This is separated by a spring from a toothed pulley located directly in front of it. When the electric-manual lever is in the electric position, the clutch plate is free of the pulley. When the lever is turned to the manual position, a yoke, or crosspiece, on the front of the manual tuning shaft is pulled forward on the yoke track of the clutch release lever (Fig. 3) pulling the tuning shaft forward. This causes the clutch plate to engage the toothed pulley. This pulley is belt-connected to gear No. 2 on the train of gears. As a result, the gears rotate when the manual tuning knob is turned. When the setting button is depressed, the plunger moves the locking plate over. This, in turn, moves the interlocking lever which throws the clutch release lever *toward* the manual position. The movement of the clutch release lever is sufficient to cause the clutch plate (Fig. 6) to engage the toothed pulley.

(170) To avoid misunderstanding in the following paragraphs, the electric-manual lever is the separate die-cast lever bearing the words "Electric-Manual" visible from the front of the cabinet panel, and the clutch release lever is the stamped lever shown in Fig. 3.

(171) If the clutch plate is bent too far back, it may not engage the pulley teeth properly when the lever is thrown to the manual position or when the setting button is depressed. Bend this plate forward at the toothed section until it meshes properly under the above conditions. Also, be sure the clutch plate releases properly when the electric manual lever is in the electric position.

(172) When the electric-manual lever is in the electric position, the tuning knob should not turn when a tuning button is depressed and the motor is operating, since the clutch plate should be disengaged from the pulley. If this knob rotates while the motor is operating, the chassis may be too far forward in the cabinet preventing the clutch release lever from returning to the electric position. Move the chassis back (Par. 51). The electric-manual die cast lever may not turn freely on the clutch bearing (Fig. 3) and may not return to the electric position. Bend the upper and lower portion of the bearing together with heavy pliers, or file the surface down until this lever turns easily. The tuning knob may have been put on the shaft while the electric-manual lever was in the manual position. Loosen this knob and put it on when the lever is in the electric position. The clutch releasing spring between the clutch plate (Fig. 6) and the toothed pulley may be broken or of insufficient tension to properly separate these two items. Put on a new spring or increase the tension of this spring.

(173) If the manual tuning knob turns very hard when tuning the radio manually, the clutch releasing

Fig. 22—Clutch Release Lever—Early Models

spring which is just in front of the clutch plate, may have become caught in some manner and not rotate freely on the shaft. Bend this spring so that it rotates freely on the shaft, or put on a new one.

(174) In Fig. 22 is shown a side view of the early type of clutch release lever. On occasion the yoke track was too close to the lever proper and when the electric-manual lever was pushed to the manual position, the yoke jammed against the end of the track instead of sliding up on it. The remedy for this is to bend the yoke track away from the lever $\frac{1}{32}$ or $\frac{1}{16}$ of an inch until proper action is obtained.

(175) The tip on the clutch release lever slot (Fig. 3) may be too high or too low. If too high, it will prevent the electric-manual lever from being pushed into the electric position. The remedy is to cut or file a slight amount off the top of this tip. If the tip is too low, the clutch release lever will not stay in the manual position. As a general rule, the electric drive panel will have to be returned to the factory to have this corrected. Binding of the clutch release lever and interlocking lever (Fig. 3) might also prevent the electric-manual lever from being thrown to the electric position. Free these levers so that they operate easily if this condition occurs.

©John F. Rider, Publisher

MODELS 14,15,16
Electric Drive Dials
Electric Manual Lever
Notes,Part 2

WELLS-GARDNER & CO.

Locking Plate and
Reversing Switch,Notes

Replacing Electric-Manual Lever and Manual Tuning Knob

(176) Before removing the electric-manual lever turn it to the electric position. When replacing the lever, place it on the tuning shaft, line up the pin on the back of the lever with the hole in the clutch release lever and push the lever on the shaft. When replacing the tuning knob on the shaft, push it all the way on and tighten the set screw.

Replacing Clutch Releasing Spring or Clutch Plate

(177) Remove the electric drive panel from the chassis and lay it face down in front of the chassis. It is not necessary to unsolder the wire on the silencer assembly or the wires on the motor cable asembly to the chassis.

(178) Hold the front end of the tuning knob shaft with pliers and, at the same time, loosen the hex nut at the back end of the shaft. Remove the nut, lock washer, and clutch plate. Replace the clutch spring and, if necessary, the clutch plate, and reassemble, reversing the above procedure. Correct adjustment of the clutch plate is important and the instructions given in Par. 171 should be carefully followed.

Locking Plate

(179) The locking plate (Fig. 3) has three main functions. First, it holds the tuning button in, after the button has been depressed and releases any other tuning buttons which have previously been depressed. Second, it shifts the electric-manual lever, when the setting button is depressed, to engage the clutch. It does this by moving the interlocking lever which, in turn, shifts the clutch release lever. Third, when the electric-manual lever is turned to the manual position, the locking plate releases any buttons that are depressed and locks these buttons to keep them from being depressed.

(180) The locking plate must slide freely on the 4 studs and in back of the 4 washers (Fig. 3) which hold it in place. If the plate appears to bend at these washers, loosen them with a screwdriver and place a small amount of grease in back of the washer. The interlocking lever (Fig. 3) must also work freely and should be loosened until it turns easily.

(181) If the locking plate screws at the top of the locking plate are too loose, it may not be possible to push the electric-manual lever to the manual position. The reason for this is that the tip of the locking plate is so far out that it does not move into the slot on the tuning button plunger. The remedy, of course, is to tighten these screws.

(182) If a tuning button is depressed and pressing in another button does not release the first nor permit the second button to stay in, it is due to a slight distortion in the locking plate or to the fact that the locking plate screws are out too far.

(183) This condition can be overcome without removing the chassis from the cabinet by depressing the first button again and then depressing the second quickly. However, it may be permanently corrected as follows: The two locking plate screws (Fig. 3) may be out too far. Turn these screws down and see if this corrects the condition. If it does not, the plate is distorted. If the left hand group (from front) of buttons will not remain depressed and will not release the right hand group, tap the locking plate lightly with a hammer at point A, Fig. 3. If the right hand group of buttons will not remain depressed and will not release the left hand group, tap the locking plate at the bottom of the plate directly under point A. This will overcome the distortion on the plate and should correct this condition.

Reversing Switch

(184) The function of the reversing switch is to provide a means of reversing the direction of the motor rotation just before the gang condenser rotor reaches maximum open or closed position as the radio is being tuned electrically. This is accomplished by means of the pin on the No. 4 drive gear casting operating the reversing switch lever. This lever trips the reversing switch which changes one of the motor windings from one side of the line to the other causing a reversal of the direction of rotation of the motor. The electrical connections for this circuit are shown in Fig. 24.

(185) If the dial pointer reaches the end of the scale and stops, but the motor continues to operate, loosen the reversing switch mounting screws and adjust the position of the bracket up or down until the switch operates properly. If this procedure does not remedy the condition, put one of the centering springs on the reversing switch—one of these can be obtained from the factory. Later models are already equipped with this spring—See Fig. 23.

(186) If trouble develops in the reversing switch circuit, carefully check the wiring for loose or broken connections. Carefully check the switch to see that it is making proper contact in both positions. If it is not, it will have to be replaced. Early models used a switch which required a tubular condenser across the contact points. Do not operate this type switch without the condenser being connected to it as the contact points will be damaged. The switch used on later models and for replacement purposes does not use this condenser. If an old switch is replaced by one of the new type, disconnect the condenser from the circuit.

Replacing Reversing Switch

(187) Remove the electric drive panel from the chassis (See article on this procedure). It is not necessary to unsolder the silencer or motor connections.

(188) The location of the reversing switch is shown in Fig. 6. Unscrew and remove the two small bolts which hold the switch to the bracket. Unsolder the leads to the switch.

(189) To replace the switch, reverse the above procedure. The connections to the switch are shown in Fig. 24. If an early type switch requiring a condenser is replaced by a new type switch, the two leads from the metal shell tubular condenser should be disconnected and also the extra lead from the condenser to the switch.

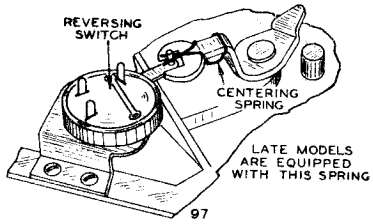

Fig. 23—Centering Switch on Reversing Switch Lever

Electric Circuit of the Motor Drive

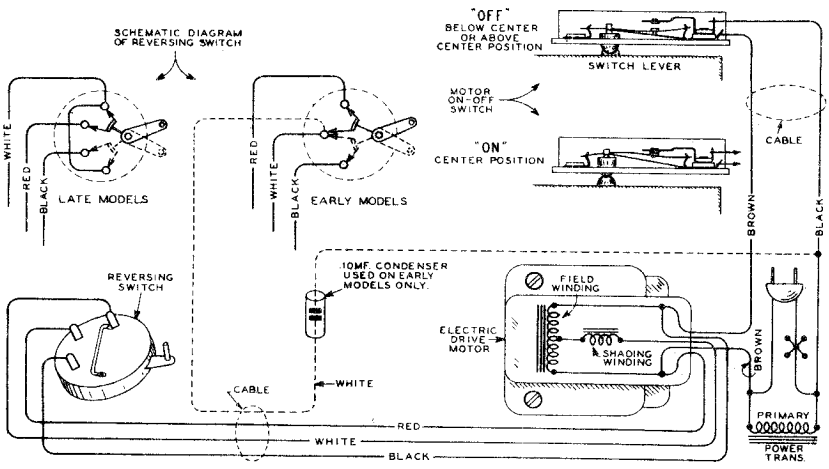

Fig. 24—Electric Drive Panel Wiring

(190) In Fig. 24 is shown the electrical wiring of the electric drive panel. Three distinct units, the motor, the on-off switch, and the reversing switch enter into the electrical operation. Since the operation of each of these units is discussed fully in the articles covering them, it will not be repeated here.

(191) One other electric circuit which is associated with the electric drive panel is the silencer circuit. This circuit silences the radio while the motor is operating. The mechanical operation of the silencer circuit is discussed fully in the article "Motor and Silencer Spring Assembly."

(192) The silencer circuit is shown in the schematic circuit diagram of the service manuals of the various chassis using the electric drive.

(193) If there is reason to believe that one or more of the electrical connections are open, check for continuity using Fig. 24 as a guide. Following are the D.C. resistances of the motor windings:

Field—tap to black wire—13.6 ohms
Field—tap to red wire—16.3 ohms
Shading Winding —99.7 ohms

©John F. Rider, Publisher

WELLS-GARDNER & CO.

MODELS 14,15,16
Electric Drive Dials
Parts List

CONTAINING 25 AND 40 CYCLE DATA AND PARTS LIST

SEPT., 1937

25 Cycle Electric Drive Panel

The 25 cycle electric drive panel assembly is identical to the 60 cycle assembly except that a 25 cycle motor and a different gear No. 1 (see Fig. 6 in electric drive notes) are used.

The pinion gears in the 25 and 60 cycle motors are not the same. If, therefore, one of these pinions is ordered, the type of motor must be specified. (Both 25 and 60 cycle motors are furnished with pinion included.)

40 Cycle Power Supply

An electric drive chassis equipped with a 117-234 volt 40 to 60 cycle power transformer can be used on a 60 cycle power supply only, unless changed as mentioned below. The electric drive panels of these sets are equipped with 60 cycle motors and these will function satisfactorily only at that frequency.

If one of these radios is to be used on a 40 cycle power supply, it will be necessary to change the motor. The motor regularly supplied with the 25 cycle model is used for this purpose.

Electric Drive Panel Replacement Parts

There is a number on the On-Off switch bracket which identifies the panel as to major part changes. Be sure to mention this issue number when ordering parts for the Electric Drive Panel.

For names of parts shown in the Electric Drive Panel list, refer to the illustrations in the Electric Drive NOTES, especially Figs. 3, 6, 7, 8, 9, 10 and 11.

Part No.	Description	List Price
25A217	60 Cycle Electric Drive Panel Complete—Includes Main Casting, Gears, Pulleys, Switches, Motor, Setting Discs, Tuning and Setting Button Plungers—less Gang Condenser, Condenser Support Bracket, Upper Triangular Support Bracket, Dial Scale and Bracket, Dial Pointer and Cap	$27.80
25A249	25 Cycle Electric Drive Panel Complete—Same as above except with 25 Cycle Motor and No. 1 Gear Assembly	29.20
57X8	Locking Plate	.60
28X139	Spring for Locking Plate Doz.	.30
37X93	Interlocking Lever	.10
37X95	Clutch Release Lever	.10
28X137	Spring used on above Lever Doz.	.35
26X259	Tuning Knob Shaft	.10
37X94	Yoke for Clutch Lever (Fits in Groove on above Shaft)	.10
19X88	Keyway Washer (Used on Clutch Bearing) Doz.	.15
24X294	Pulley for Manual Drive Belt (On Back of Tuning Shaft)	.30
20X212	Roller Bearing for Above Pulley Doz.	.15
57X10	Clutch Plate	.10
28X152	Clutch Release Spring (In front of Clutch Plate from Back of Panel) Doz.	.05
8X57	Manual Drive Belt	.35
26A74	Belt Tension Pulley and Bracket Assembly	.20
28X150	Spring for above Assembly Doz.	.20
24X316	Belt Idler Pulley only	.10
25A178	Setting Disc Assembly	.75
28X134	Tension Spring (Fastened to Auxiliary and Drum Release Levers) Doz.	.25
28X151	Tension Spring for Pawl of Setting Disc Doz.	.25
26X255	Setting Disc Shaft	.40
20X192	Ball Bearings in Retainer (For Setting Disc Shaft)	.10
20X207	Bearing Cone (Without Set Screw)—On Setting Disc Shaft	.15
20X195	Bearing Cone (With Set Screw)—On Setting Disc Shaft	.20
24X288	Pulley for Drive Cable (On Setting Disc Shaft)	.15
25X403	Support Bracket for Setting Disc Shaft (Left side from back)	.10
25X412	Support Bracket for Setting Disc Shaft and Motor On-Off Switch	.15
26A75	Adjusting and Support Rod for Motor On-Off Switch (Panel Issue No. 4 and Later)	.10
2A105	Motor On-Off Switch Assembly Complete	.95
37X85	Switch Lever (Right section from back)	.20
37X96	Switch Lever (Left section from back)	.20
25X413	Switch Lever (Center section)	.15
28X137	Switch Lever Spring Doz.	.35
37X82	Stop Lever	.10
28X148	Stop Lever Spring Doz.	.15
25A181	Rocker Arm and Rocker Arm Stop Assembly Complete with Spring	$0.20
28X131	Spring for Rocker Arm Stop Doz.	.10
26X256	Rocker Arm Shaft	.10
26X261	Setting Button Plunger	.10
10A121	Setting Button only	.10
26X254	Tuning Button Plunger with Stop Pin	.15
28X138	Tuning Plunger Spring Doz.	.10
10A120	Tuning Button only	.10
28X129	Hairpin Springs for Tuning Buttons Doz.	.10
10X26	Main Drive Cable Complete with Turnbuckle	.75
12X75	60 Cycle Motor Complete	4.55
24X296	Pinion Gear only (On Motor Armature Shaft)—60 Cycle	.10
12X82	25 Cycle Motor Complete	6.15
25A233	No. 1 Pinion and Gear Assembly (For 60 Cycle Operation)	.45
25A248	No. 1 Pinion and Gear Assembly (For 25 Cycle Operation)	.60
24X307	No. 2 Gear and Pulley	.20
25A184	No. 3 Gear Assembly	.35
25A221	No. 4 Gear Assembly	.55
28X141	Spreader Springs for Gears No. 3 and 4 Doz.	.05
26A73	Pulley Bracket Assembly complete with Gear No. 5, Pulleys and Roller Bearing Assembly	1.70
25A186	No. 5 Gear and Drive Arm Assembly only	.30
2A97	Reversing Switch	.35
37X98	Lever for Operating Reversing Switch	.10
28X158	Centering Spring (Used on Reversing Switch Lever)	.10
25X430	Bracket for Reversing Switch	.10
25A239	Silencer Spring Assembly complete with Shield	.20
26A79	Drive Drum for Gang Condenser	.50
25X401	Front Support Bracket for Gang Condenser	.65
8X43	Rubber Cushion (Used for Mounting above Bracket)	.10
20X152	Stud (Used with Rubber Grommet—6X8—for Mounting above Bracket to Chassis)	.10
6X8	Rubber Grommet (Used with above Stud) Doz.	.15
25X424	Triangular Support Bracket (Holds Electric Drive Panel to Gang Condenser Support Bracket)	.10
Specify Name & Model Number of Radio	Dial Scale Mounting Bracket Complete with Dial Scale (Less Pointer and Pointer Cap)	1.80
	Dial Scale only	1.35
25X417	Mounting Bracket only for Dial Scale	.35
15X111	Dial Pointer only	.20
15X104	Cap for Dial Pointer	.10
26X265	Stud for Mounting Pointer	.10
10A125	Electric-Manual Lever	.20
7A67	Dial Lamp Socket Assembly (2 Sockets) less Lamps	.30
	Dial Lamp only (No. 51 Bayonet Type)	.20
17X23	Glass Crystal	.10
28X25	Retaining Spring for Glass Crystal	.10
25X362	"L" Bracket (For Mounting Rear of Gang Condenser to Chassis)—Series A1 and A2	.10
25X382	"L" Bracket (For Mounting Rear of Gang Condenser to Chassis)—Series A3	.10
20X150	Stud (For Mounting above Bracket to Gang Condenser)	.10
6X18	Rubber Grommet (Used on above Stud) Doz.	.30
2X236	Rubber Washer—Flat (Used with above Grommet) Doz.	.15
26A56	Station Call Letter Discs and 25 Celluloid Discs	.35
25X405	Shipping Support Bracket (Top of Electric Drive Panel to Wood Brace)	.20
8X23	Rubber Cushion (Used with Shipping Support Bracket)	.10

Prices Subject to Change Without Notice.

FORM 1589

©John F. Rider, Publisher

©John F. Rider, Publisher

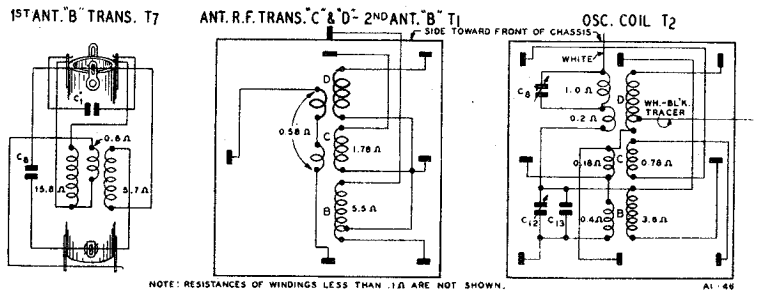

Fig. 7—Coil Terminal Arrangement and D.C. Resistance of Windings

Phonograph Connections

Phonograph connections are made as shown in the schematic circuit diagram Fig. 2. On the side panel of the chassis base is a round knockout 1⅛ inches in diameter. An octal base socket is mounted in this knockout opening and wired as shown in the schematic.

A phono cable assembly may then be purchased (see parts list). On one end of this cable is an octal plug and on the other end is a phonograph-radio switch and double tip jack.

Some models are shipped from the factory equipped with the phono socket. A jumper is inserted in this socket which must be removed if the phonograph installation is made—See Fig. 2.

Early Models—A few of the early models did not have the circular knockout for the phonograph socket as mentioned above. If a phonograph installation is to be made in connection with one of these early models, write the factory for detailed instructions.

117-234 Volt Power Transformers

Some models are equipped with a 117-234 volt 40 to 60 cycle power transformer. Connections as shown in Fig. 2 are completed to a special octal socket mounted on the back panel of the chassis. A plug which goes with this socket may then be inserted for either the 117 volt or 234 volt connection.

If one of these transformers is to be installed in a chassis equipped with a regular transformer, there is a 1⅛ inch round knockout on the back panel which may be removed to permit installation of the octal socket mentioned above.

Dial and Drive Assembly

Complete information regarding the dial and drive assemblies will be found in the Dial and Drive Service Notes issued for this chassis. (see index)

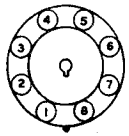

Fig. 5—Octal Tube Terminal Numbering (bottom of socket)

NOTE: METAL TUBES ARE IN THE SAME POSITIONS AS THE GLASS EQUIVALENTS SHOWN IN THE LAYOUT

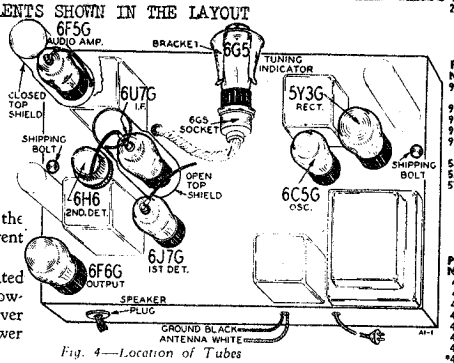

Fig. 4—Location of Tubes

Twenty-five Cycle Models

The twenty-five cycle receiver differs from the sixty cycle receiver only in the fact that a different power transformer is used.

The twenty-five cycle receiver can be operated satisfactorily from a sixty cycle power supply. However, the reverse is not true, the sixty cycle receiver cannot be operated from a twenty-five cycle power supply.

Series A1 - Replacement Parts

NOTICE—There is a large letter on the chassis which identifies the set as to major part changes. When ordering parts, please be sure to mention the series number and this large letter.

With the exception of the parts otherwise indicated, the following parts are common to Series A1 chassis using either the Telephone Dial or the Phantom Light Dial.

MISCELLANEOUS

SOCKETS

Part No.	Description	List Price
3A254	Tube Socket—Octal (7 Prong)	$0.15
3A261	Tube Socket—Octal (5 Prong)	.10
3A263	Tube Socket—Octal (8 Prong)	.15
3A262	Speaker Socket—(6 Prong)	.15
13X295	6G5 Tube Socket and Cable Assembly	.55
3A266	Phono Socket—Octal (4 Prong)	.10
3A252	Dual Keyway Socket—Octal (8 Prong)—Universal Power Transformer Connections	.15
6A214	Plug (4 Prong)—Used with above socket	.25

SPEAKERS

When ordering parts for speakers, specify part number of speaker and letter preceding part number stamped on the speaker.

12A288	8" Dynamic Speaker compl. with Output Transformer (T5)	6.30
	Cone and Voice Coil Assy. for above Spkr.	2.75
	Output Transformer only (T5)	2.45
12A268	10" Dynamic Speaker compl. with Output Transformer (T5)	6.65
	Cone and Voice Coil Assy. for above Spkr.	3.50
	Output Transformer only (T5)	2.45
12A291	12" Dynamic Speaker compl. with Output Transformer (T5)	7.55
	Cone and Voice Coil Assy. for above Spkr.	4.60
	Output Transformer only (T5)	2.45

KNOBS

Specify name of knob & name & model of radio	Volume Control	.15
	Tone Control	.15
	Tuning Control	.15
	Band Switch	.20
	Selectivity Control	.25

GENERAL

32X51	Tube Shield Base	.10
32X32	Tube Shield—Open Top (Used only on models having glass tubes)	.15
32X50	Tube Shield—Closed Top (Used on glass & metal tube chassis)	.15
8X23	Rubber Cushions (Chassis Mounting)	.10
2X38	Felt Washers (Used behind Knobs) doz.	.10
13X80	Line Cord and Plug	.80
13X214	Antenna and Ground Lead Assembly	.30
2A87	Band Change Switch (1 section, 3 position)—Used on Phantom Light Dial Radios only	1.05
2A85	Dial Lamp Switch—Used with above Switch on Phantom Light Dial only	.30
2A77	Band Change Switch (1 section, 3 position)—Used on Telephone Dial Radios only	1.00
25X375	Chassis Mounting Foot	.10
30X44	Grid Clip Only doz.	.10
2A78	Selectivity Switch	.40
4A68	Terminal Strip (3 Lugs insulated)	.10
25X378	Clamp Bracket for Tuning Eye Tube	.10

TRANSFORMERS AND COILS

Part No.	Code	Description	List Price
9A774	T1	Antenna Transformer and Can Assembly "B" Range Secondary; C & D Range	$2.00
9A778	T7	1st Antenna Coil Assembly "B" Range	1.20
9A776	T2	Oscillator Coil and Can Assembly	3.35
9A776	T3	1st I.F. Transformer and Can Assembly	2.40
9A777	T4	2nd I.F. Transformer and Can Assembly	2.35
	T5	Output Transformer only (See "Speakers")	
53X144	T6	117 Volt, 60 Cycle, Standard Power Transformer	3.10
53X145	T6	117 Volt, 25 Cycle, Standard Power Transformer	5.20
53X146	T6	117-234 Volt, 40-60 Cycle, Universal Power Transformer	4.35

CONDENSERS

TUBULAR

Part No.	Code	Capacitance	Voltage	List Price
46X80	C5	.05 mf.	180	$0.15
46X120	C17	.01 mf.	360	.15
46X187	C19	.02 mf.	180	.15
46X212	C20	.04 mf.	360	.15
46X105	C21	.1 mf.	360	.20
46X197	C26	.02 mf.	180	.15
46X202	C27	.02 mf.	360	.15
*46X98	C33	.1 mf.	180	.20
46X147	C34	.005 mf.	360	.15

CONDENSERS (Cont.)

TUBULAR (Cont.)

Part No.	Code	Capacitance	Voltage	List Price
46X98	C36	.1 mf.	180	$0.20
46X202	C37	.02 mf.	360	.15
46X98	C38	.1 mf.	180	.20
46X100	C39	.002 mf.	600	.15
46X108	C40	.05 mf.	600	.20

ELECTROLYTIC

44X35	C41	30 mf.	250	.75
44X31	C42	12 mf.	340	.80

MOLDED

47X69	C1	250 mmf.		.15
47X63	C6	10 mmf.		.15
47X49	C18	7 mmf.		.10
47X56	C32	50 mmf.		.10
47X65	C35	250 mmf.		.15
†47X56	C43	50 mmf.		.10

TRIMMER

17A73	C2	2-25 mmf.	Antenna Range—"D"	.35
	C3	2-25 mmf.	Antenna Range—"C"	
	C4	2-25 mmf.	2nd Antenna Range—"B"	
17A74	C7	2-25 mmf.	1st Antenna Range—"B"	.10
17A69	C8	40-100 mmf.	Oscillator 7000 KC	.40
	C12	40-120 mmf.	Oscillator 600 KC	
17A76	C9	2-25 mmf.	Oscillator Range "D"	.25
	C10	2-25 mmf.	Oscillator Range "C"	
17A75	C11	1300-1700 mmf.	Range "C"—Series Padding	.50
17A68	C14	1-12 mmf.	Oscillator Range "B"	.20
17A70	C23	15-50 mmf.	1st I.F. Trimmers	.40
	C24	15-50 mmf.		
17A70	C29	15-50 mmf.	2nd I.F. Trimmers	.40
	C30	15-50 mmf.		

MISCELLANEOUS

47X82	C13	330 mmf.	Iron Clad	.30
47X81	C16	35 mmf.	Iron Clad	.25
47X85	C22	60 mmf.	Iron Clad	.30
47X85	C25	60 mmf.	Iron Clad	.30
47X84	C28	75 mmf.	Iron Clad	.35
47X87	C31	160 mmf.	Iron Clad	.30
47X80	C15	13 mmf.	Compensating Capacitor	.50
14A70	3 Section Gang Condenser less Gears and Dial Assy.			4.20

* Used only on Telephone Dial Models.
† Used only on Phantom Light Dial Models.

RESISTORS

CARBON

Part No.	Code	Resistance	Wattage	List Price
A95402	R1	4000 Ohm	0.2	$0.10
A94104	R2	100,000 Ohm	0.2	.15
A94104	R3	100,000 Ohm	0.2	.15
A94281	R4	250 Ohm	0.2	.15
C94203	R5	20,000 Ohm	1.0	.15
C94203	R6	20,000 Ohm	1.0	.15
B94203	R7	20,000 Ohm	0.5	.15
A94405	R8	4 Megohm	0.2	.15
A94126	R9	12 Megohm	0.2	.15
A95105	R10	1 Megohm	0.2	.10
A95503	R11	50,000 Ohm	0.2	.10
A95205	R12	2 Megohm	0.2	.10
*A95106	R13	10 Megohm	0.2	.10
A95504	R17	500,000 Ohm	0.2	.10
A95206	R18	2 Megohm	0.2	.10
A95503	R19	50,000 Ohm	0.2	.10
A96154	R20	150,000 Ohm	0.2	.10
A95254	R21	250,000 Ohm	0.2	.10
A95151	R23	150 Ohm	0.2	.10

WIRE WOUND

43X76	R15	26 Ohm	.25	.35
	R16	239 Ohm	2.0	

VARIABLE

36X235	R14	.5 Megohm	Volume Control and On-Off Switch	.90
40X223	R22	.15 Megohm	Tone Control	.65

* Used only on Telephone Dial Models.

PHONO ATTACHMENT PARTS

Part No.	Description	List Price
13X298	30" Phono Cable Assembly Complete (Includes Plug, Double-tip Phone Jack, Switch, and Knob)	$2.55
3A266	Phono Socket—Octal (4 Prong)—Must be ordered for Chassis not equipped with this socket	.10
6A218	Plug (8 Prong) Only of Phono Cable	.15
3A12	Phono Jack Only of Phono Cable	.10
2A80	Phono Switch Only of Phono Cable	.70
10A90	Knob Only of Phono Cable	.20

DIAL AND DRIVE ASSEMBLY

DIAL AND DRIVE PARTS WILL BE FOUND IN SPECIAL DIAL AND DRIVE NOTES. (see index)

Prices Subject to Change Without Notice.

MODEL A-1 Series
Schematic, Specs.
Sensitivity, Phono.

WELLS-GARDNER & CO.

Power Consumption - 67 Watts (At 117 volts 60 cycles)
Power Output - - - - - 2.5 Watts Undistorted, 4.5 Watts Maximum
Selectivity - 30 KC Broad at 1000 times Signal (Sharp)
Intermediate Frequency - - - - - - 456 KC.
Speakers - - - - - 8", 10" or 12" Dynamic

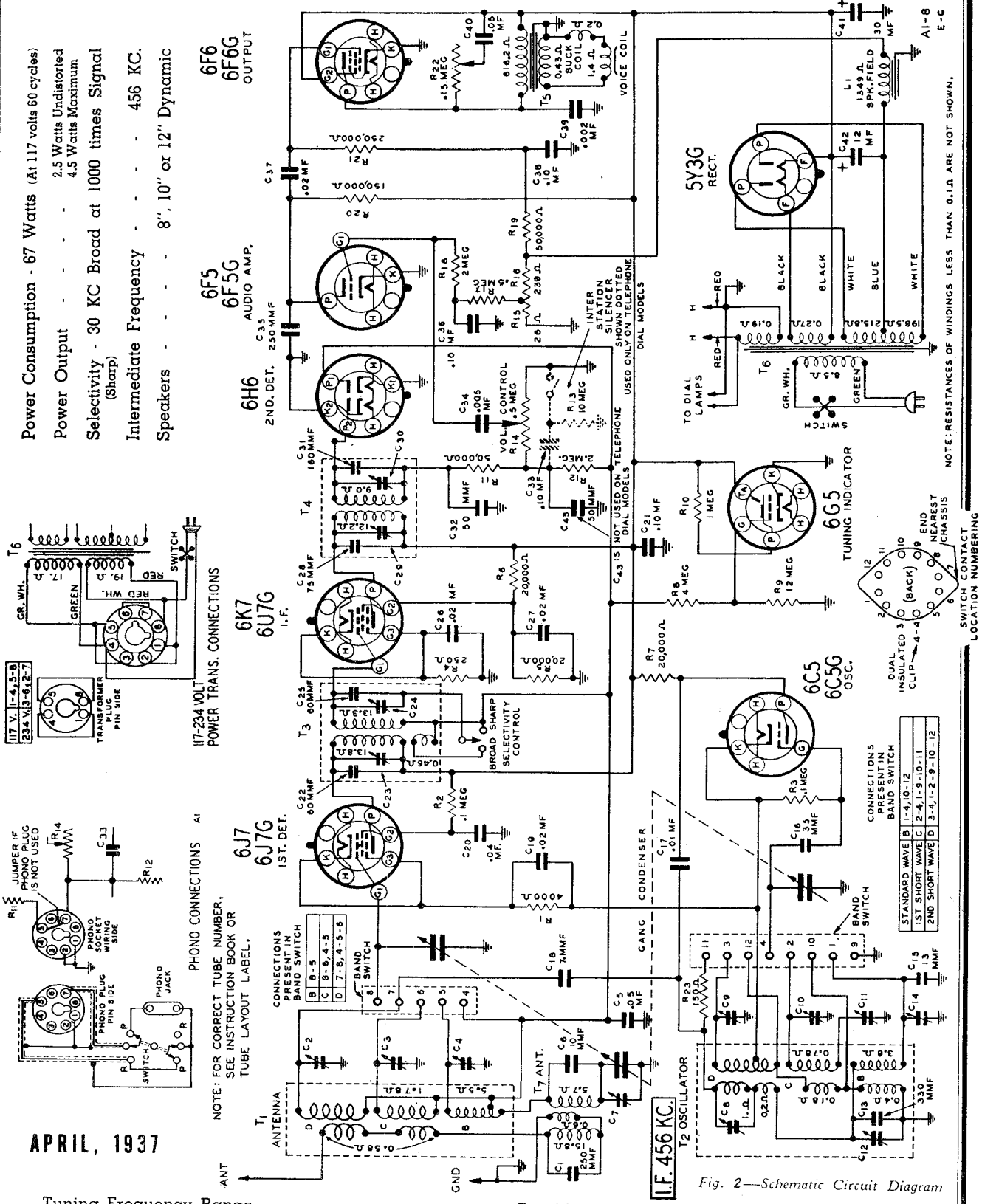

APRIL, 1937

Fig. 2—Schematic Circuit Diagram

Tuning Frequency Range

B Range	528 to 1830 KC.
C Range	1810 to 6350 KC.
D Range	6300 to 22000 KC.

Sensitivity

B Range	8 Microvolts Average
C Range	13 Microvolts Average
D Range	9 Microvolts Average

©John F. Rider, Publisher

MODEL A-1 Series
Alignment, Trimmers
Circuit Data, Voltage

WELLS-GARDNER & CO.

8 TUBE • 3 BAND • ALL WAVE SERIES A1

ALIGNMENT PROCEDURE

Volume Control—Maximum All Adjustments.
Selectivity Control—Sharp Position All Adjustments.
Connect Radio Chassis to Ground Post of Signal Generator with a Short Heavy Lead.
Allow Chassis and Signal Generator to "Heat Up" for Several Minutes.

The following equipment is required for aligning:
An All Wave Signal Generator which will provide an accurately calibrated signal at the test frequencies as listed.
Output Indicating Meter — Non-Metallic Screwdriver.
Dummy Antennas — .1 mf., 200 mmf., and 400 ohms.

STEP (Follow Order as Given)	BAND SWITCH SETTING	DUMMY ANTENNA	SIGNAL GENERATOR FREQUENCY SETTING	SIGNAL GENERATOR CONNECTION AT RADIO	TRIMMERS ADJUSTED See Illustration	PROCEDURE INITIAL STEPS	PROCEDURE ADJUSTMENT
I. F.							
2nd I.F. Adj.	Range B	.1 mf.	456 KC	Grid of I.F. Tube	2nd I.F. (C29) & (C30)	Turn Rotor to Full Open	Adjust to Maximum Output
1st I.F. Adj.	Range B	.1 mf.	456 KC	Grid of 1st Det.	1st I.F. (C23) & (C24)	Turn Rotor to Full Open	Adjust to Maximum Output
RANGE B							
1830 KC	Range B	200 mmf.	1830 KC	Antenna Lead	Oscillator Range B (C14)	Turn Rotor to Full Open	Adjust to Maximum Output
1500 KC	Range B	200 mmf.	1500 KC	Antenna Lead	1st Ant. Range B (C7) 2nd Ant. Range B (C4)	Turn Rotor to Max. Output Set Indicator to 1500 KC— See Note A	Adjust to Maximum Output
600 KC	Range B	200 mmf.	600 KC	Antenna Lead	600 KC (C12)	Turn Rotor to Max. Output	Adjust to Maximum Output Rock Rotor — See Note B
RANGE C							
6350 KC	Range C	400 Ohm	6350 KC	Antenna Lead	Oscillator Range C (C10)	Turn Rotor to Full Open	Adjust to Maximum Output
6000 KC	Range C	400 Ohm	6000 KC	Antenna Lead	Antenna Range C (C3)	Turn Rotor to Max. Output	Adjust to Maximum Output
2000 KC	Range C	400 Ohm	2000 KC	Antenna Lead	2000 KC (C11)	Turn Rotor to Max. Output	Adjust to Maximum Output Rock Rotor — See Note B
RANGE D							
22,000 KC	Range D	400 Ohm	22,000 KC	Antenna Lead	Oscillator Range D (C9)'	Turn Rotor to Full Open	Adjust to Maximum Output
20,000 KC	Range D	400 Ohm	20,000 KC	Antenna Lead	Antenna Range D (C2)	Turn Rotor to Max. Output	Adjust to Maximum Output Rock Rotor — See Note B
7000 KC	Range D	400 Ohm	7000 KC	Antenna Lead	7000 KC (C8)	Turn Rotor to Max. Output	Adjust to Maximum Output Rock Rotor — See Note B

Attenuate the signal from the signal generator to prevent the leveling-off action of the AVC.

After each range is completed, repeat the procedure as a final check.

NOTE A—In sets using the telephone dial tuning, there will be seen inside the telephone dial button ring an escutcheon plate held in place by four screws. Loosen the 2 screws nearest the pointer. An extension of the pointer will be seen protruding over the edge of this escutcheon plate. Move the pointer to the 1500 KC mark on the dial and then tighten the 2 escutcheon screws. (Do not tighten these screws too much.)

In sets using the moving beam of light indicator, there is a moving light assembly held to the front of the drive drum by means of a screw. Loosen this screw and move the light assembly until the beam is at the 1500 KC mark on the dial. Retighten the screw.

NOTE B—Turn the rotor back and forth and adjust the trimmer until the peak of greatest intensity is obtained.

CAUTION—When aligning the short wave bands, be sure NOT to adjust at the image frequency. This can be checked as follows: Let us say the signal generator is set for 5000 KC. The signal will then be heard at 5000 KC on the dial of the radio. The image signal, which is much weaker, will be heard at 5000 less 912 KC, or 4088 KC on the dial. It may be necessary to increase the input signal to hear the image.

NOTICE—Re-alignment is necessary if glass tubes are replaced by their equivalent in metal tubes, or vice versa, in the R.F. and I.F. stages.

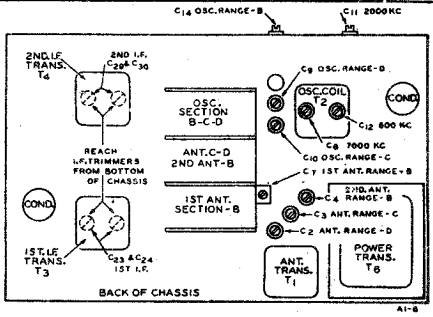

Fig. 3—Location of Trimmers

Circuit

This model is a three band AC operated radio with a tuning range as shown in the specifications above.

Referring to the schematic circuit diagram, Fig. 2, T1 and T7 are the antenna coil assemblies and T2 is the oscillator coil assembly. The standard wave, 1st and 2nd short wave coils in each assembly are indicated by the letters B, C and D respectively.

The band switch completes connections to the coils in use. When it is in the Range B position, a double tuned antenna R.F. stage is used while for the C and D Ranges, a single tuned secondary is used.

A type 6J7 tube functions as the 1st detector.

A separate type 6C5 tube is employed in the oscillator circuit. The oscillating circuit is always resonant at 456 KC above the frequency to which the R.F. amplifier is tuned.

One stage of I.F. amplification is employed using a 6K7 tube. The primaries and secondaries of the 1st and 2nd I.F. transformers are tuned by small trimmer condensers.

Referring to Fig. 2, it will be noted that there is a coupling winding connected in series with the secondary of I.F. transformer T3. When the selectivity control is in the sharp position, the coupling winding is open circuited and the loose coupling which exists between the primary and secondary of this transformer results in high selectivity.

When the selectivity control is in the broad position, the coupling winding which is wound under the primary is connected in series with the secondary. This provides overcoupling which results in a greatly widened resonance curve. Passage of a wide range of audio frequencies is thus obtained.

A 6H6 tube functions as a diode 2nd detector. AVC voltage is applied to the control grid circuits of the 1st detector and I.F. tubes.

A 6F5 triode tube functions as the first audio amplifier while the output stage uses a 6F6 output pentode tube. A dynamic reproducer is employed.

The power unit uses a 5Y3G full wave rectifier. A 6G5 tuning indicator tube is employed.

Glass and Metal Tubes

All sets of this series use a 6H6 metal tube and 5Y3G and 6G5 glass tubes.

It will be noted in the schematic that there are two tube type numbers shown at the other sockets. The "metal" tube sets use the upper tube type numbers which are for metal tubes while the "glass" tube sets use the lower tube type numbers, which are for glass tubes.

Re-alignment is necessary if glass tubes are replaced by their equivalent in metal tubes, or vice versa, in the R.F. and I.F. stages.

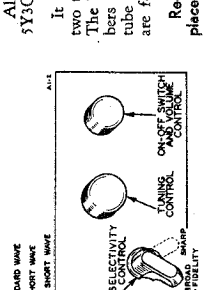

Fig. 1—Arrangement of Controls

VOLTAGES AT SOCKETS

Line Voltage: 117—Volume Control: Maximum
Readings taken with 1000 Ohm-per-volt meter.
Antenna Shorted to Ground
Position of Band Switch: Standard Wave

TUBE	FUNCTION	VOLTAGE BETWEEN SOCKET PRONG AND GROUND (Unless otherwise indicated) Prong No. 1	Prong No. 2	Prong No. 3	Prong No. 4	Prong No. 5	Prong No. 6	Prong No. 7	Prong No. 8
6J7 6J7G	1st Det.	0	6.1(1)	220	100	7.9		6.1(1)	7.9
6C5 6C5G	Osc.	0	6.1(1)	140				6.1(1)	0
6K7 6U7G	I.F.	0	6.1(1)	220	100	2		6.1(1)	2
6H6	2nd Det.	0	6.1(1)		0			6.1(1)	0
6F5 6F5G	Audio Amp.	0	6.1(1)		75			6.1(1)	0(2)
6F6 6F6G	Power	0	6.1(1)	215	220			6.1(1)	0(3)
5Y3G	Rectifier	0	4.9(4)		610(5)		610(5)		4.9(4)
6G5	Tuning Indicator	Plate to Ground 20		Target to Ground 220		Cathode to Ground 0		Across Heater 6.1 A. C.	

(1) A.C. voltage as read across heater terminals 2 and 7.
(2) Bias (1.5 volts) as read across resistor R15.
(3) Bias (14 volts) as read across resistors R15 and R16.
(4) A.C. voltage as read across filament terminals 2 and 8.
(5) A.C. voltage as read across terminals 4 and 6.

©John F. Rider, Publisher

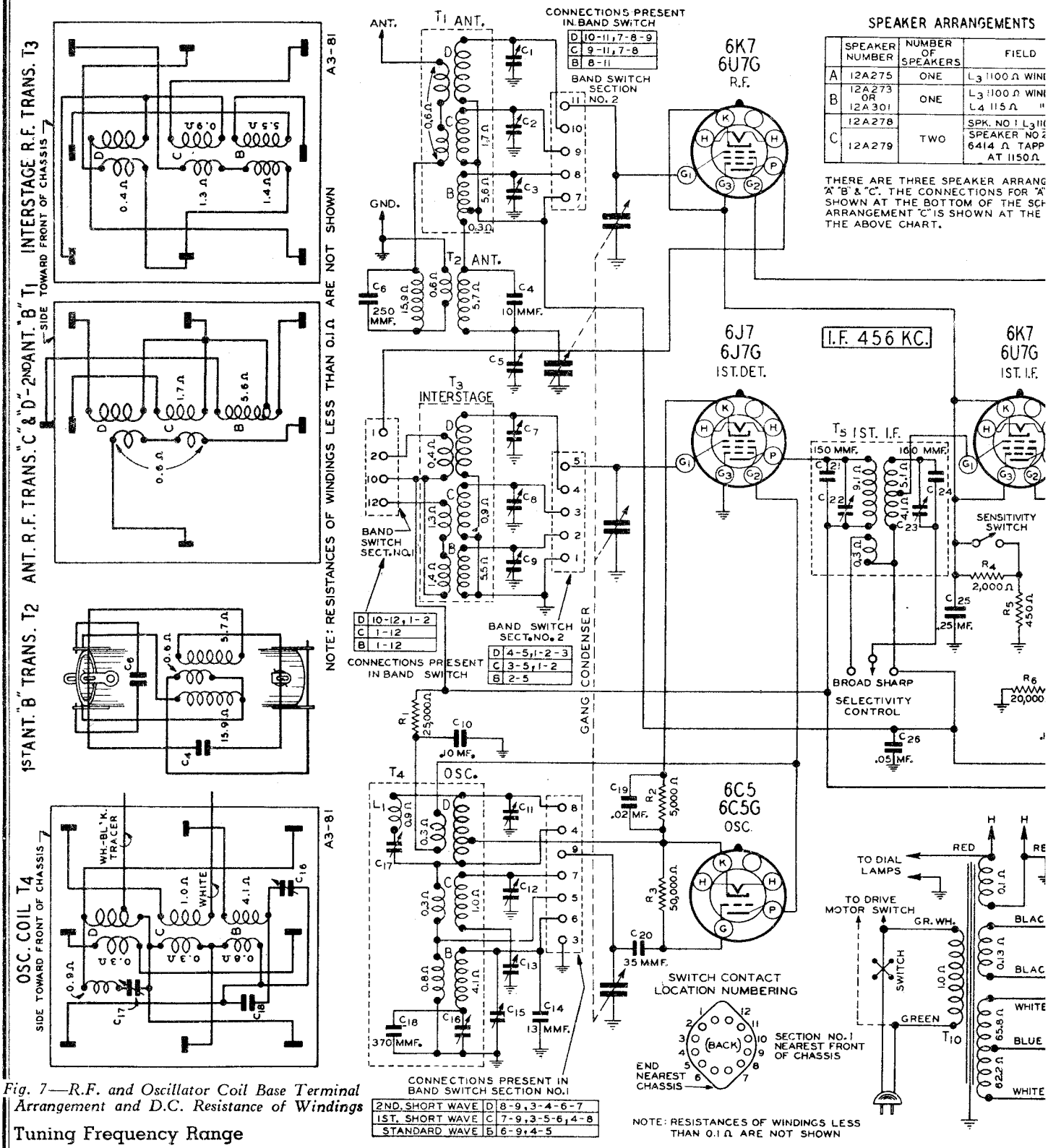

SPEAKER ARRANGEMENTS

	SPEAKER NUMBER	NUMBER OF SPEAKERS	FIELD
A	12A275	ONE	L_3 1100 Ω WIN
B	12A273 OR 12A301	ONE	L_3 1100 Ω WIN L_4 115 Ω "
C	12A278	TWO	SPK. NO 1 L_3 11 SPEAKER NO 2 6414 Ω TAPP AT 1150 Ω
C	12A279		

THERE ARE THREE SPEAKER ARRANG "A" "B" & "C". THE CONNECTIONS FOR "A" SHOWN AT THE BOTTOM OF THE SCH ARRANGEMENT "C" IS SHOWN AT THE THE ABOVE CHART.

Fig. 7—R.F. and Oscillator Coil Base Terminal Arrangement and D.C. Resistance of Windings

Tuning Frequency Range

B Range ..... 528 to 1830 KC.
C Range ..... 1810 to 6350 KC.
D Range ..... 6300 to 22000 KC.

Sensitivity

B Range ..... Less than 1 Microvolt Average
C Range ..... Less than 1 Microvolt Average
D Range ..... Less than 1 Microvolt Average

Selectivity - 22 KC Broad at 1000 times Signal (Sharp)

Intermediate Frequency - - - - - - 456 KC.

Speakers - - - - One or Two 12" Dynamics

JU

©John F. Rider, Publisher

NER & CO.

MODELS A3, A6 Series
Schematic, Coils, Phono.
Speaker Conn., Specs. Sensitivity

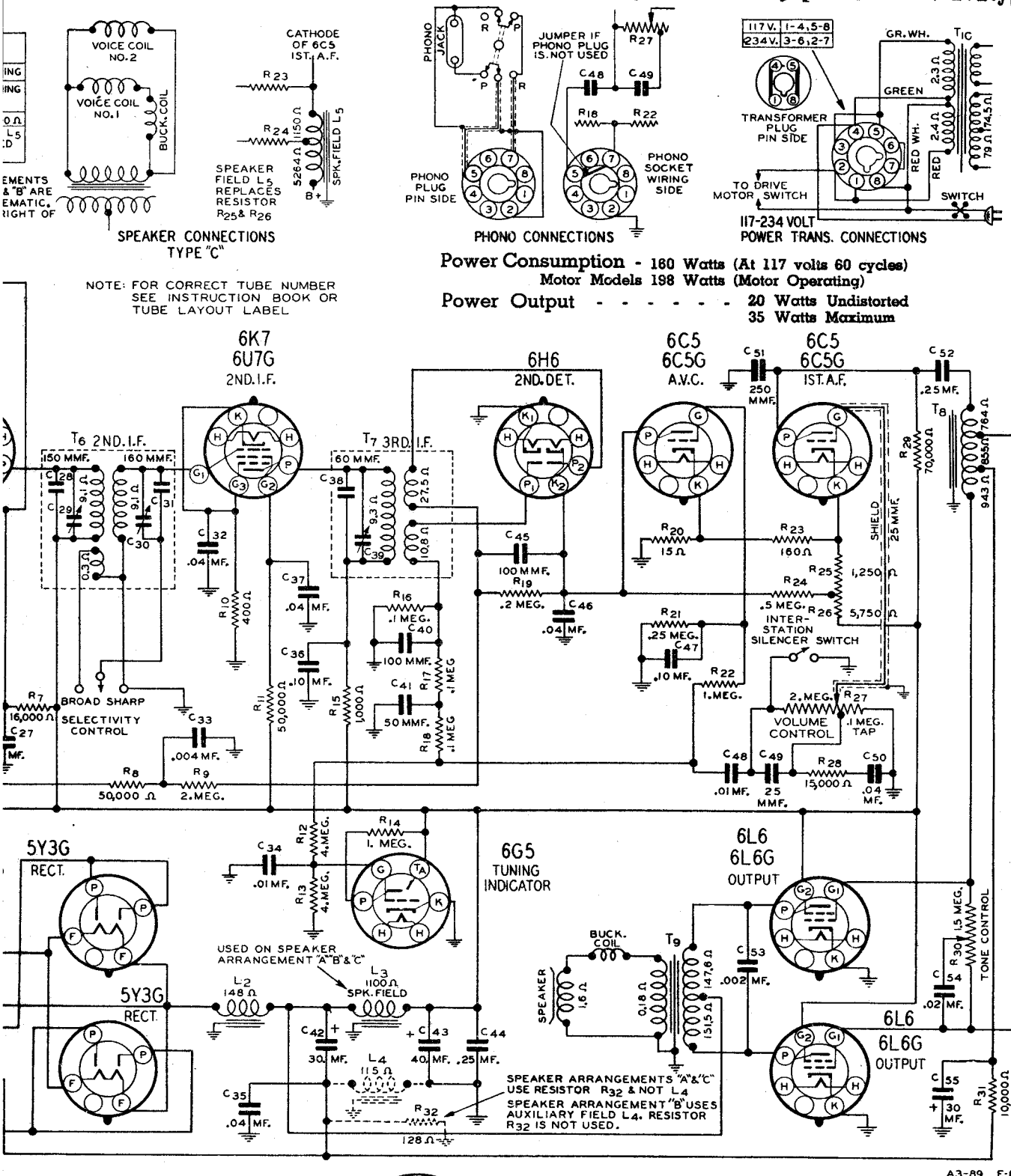

Fig. 2—Schematic Circuit Diagram

IE, 1937

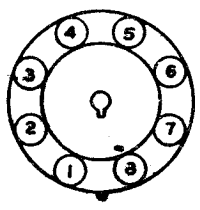

Fig. 6—Octal Tube Terminal Numbering (bottom of socket).

Series A6 Chassis

The Series A6 is identical to the Series A3 except for the speaker circuit. The Series A6 employs two speakers the connections for which are shown in the schematic circuit diagram, Fig. 2.

WELLS-GARDNER & CO.

MODELS A3, A6 Series
Voltage, Trimmers
Alignment, Notes

A. C. POWER • 3 BAND • ALL WAVE • 13 TUBE

ALIGNMENT PROCEDURE

Local-Distance Switch — Distance Position.
Volume Control—Maximum All Adjustments.
Selectivity Control—Sharp Position All Adjustments.
Connect Radio Chassis to Ground Post of Signal Generator With a Short Heavy Lead.
Allow Chassis and Signal Generator to "Heat Up" for several minutes.

The following equipment is required for aligning:
An All Wave Signal Generator which will provide an accurately calibrated signal at the test frequencies as listed.
Output Indicating Meter—Non-Metallic Screwdriver.
Dummy Antennas — .1 mf., 200 mmf., and 400 ohms.

STEP (Follow Order as Given)	BAND SWITCH SETTING	DUMMY ANTENNA	SIGNAL GENERATOR FREQUENCY SETTING	SIGNAL GENERATOR CONNECTION AT RADIO	TRIMMERS ADJUSTED See Illustration	PROCEDURE INITIAL STEPS	PROCEDURE ADJUSTMENT
I.F.							
3rd I.F.	Range B	.1 mf.	456 KC	Grid of 2nd I.F. Tube	3rd I.F. (C39)	Turn Rotor to Full Open	Adjust to Maximum Output
2nd I.F.	Range B	.1 mf.	456 KC	Grid of 1st I.F. Tube	2nd I.F. (C29) & (C30)	Turn Rotor to Full Open	Adjust to Maximum Output
1st I.F.	Range B	.1 mf.	456 KC	Grid of 1st Det.	1st I.F. (C22) & (C23)	Turn Rotor to Full Open	Adjust to Maximum Output
RANGE B							
1830 KC	Range B	200 mmf.	1830 KC	Antenna Lead	Oscillator Range B (C15)	Turn Rotor to Full Open	Adjust to Maximum Output
1500 KC	Range B	200 mmf.	1500 KC	Antenna Lead	1st & 2nd Ant. Range B (C5) & (C3)—Int. Range B (C9)	Turn Rotor to Max. Output Set Indicator to 1500 KC—See Note A	Adjust to Maximum Output
600 KC	Range B	200 mmf.	600 KC	Antenna Lead	600 KC (C16)	Turn Rotor to Max. Output	Adjust to Maximum Output Rock Rotor — See Note B
RANGE C							
6350 KC	Range C	400 Ohm	6350 KC	Antenna Lead	Oscillator Range C (C12)	Turn Rotor to Full Open	Adjust to Maximum Output
6000 KC	Range C	400 Ohm	6000 KC	Antenna Lead	Ant. Range C, (C2) Int. Range C (C8)	Turn Rotor to Max. Output	Adjust to Maximum Output
2000 KC	Range C	400 Ohm	2000 KC	Antenna Lead	2000 KC (C13)	Turn Rotor to Max. Output	Adjust to Maximum Output Rock Rotor — See Note B
RANGE D							
22,000 KC	Range D	400 Ohm	22,000 KC	Antenna Lead	Oscillator Range D (C11)	Turn Rotor to Full Open	Adjust to Maximum Output
20,000 KC	Range D	400 Ohm	20,000 KC	Antenna Lead	Ant. Range D (C1) Int. Range D (C7)	Turn Rotor to Max. Output	Adjust to Maximum Output Rock Rotor — See Note B
7000 KC	Range D	400 Ohm	7000 KC	Antenna Lead	7000 KC (C17)	Turn Rotor to Max. Output	Adjust to Maximum Output Rock Rotor — See Note B

Attenuate the signal from the signal generator to prevent the leveling-off action of the AVC.

After each range is completed, repeat the procedure as a final check.

NOTE A—In sets using the telephone dial tuning, there will be seen inside the telephone dial button ring an escutcheon plate held in place by four screws. Loosen the 2 screws nearest the pointer. An extension of the pointer will be seen protruding over the edge of this escutcheon plate. Move the pointer to the 1500 KC mark on the dial and then tighten the 2 escutcheon screws. (Do not tighten these screws too much.)

On the electric drive models, the pointer is held to the shaft by a friction clip arrangement. With the electric-manual lever in the manual position, hold the tuning knob and move the pointer to the 1500 KC mark on the dial.

In sets using any other type of dial mechanism, it will be necessary to adjust the position of the indicator until it is at the 1500 KC mark.

NOTE B—Turn the rotor back and forth and adjust the trimmer until the peak of greatest intensity is obtained.

CAUTION—When aligning the short wave bands, be sure NOT to adjust at the image frequency. This can be checked as follows: Let us say the signal generator is set for 5000 KC. The signal will then be heard at 5000 KC on the dial of the radio. The image signal, which is much weaker, will be heard at 5000 less 912 KC, or 4088 KC on the dial. It may be necessary to increase the input signal to hear the image.

NOTICE—Re-alignment is necessary if glass tubes are replaced by their equivalent in metal tubes, or vice versa, in the R.F. and I.F. stages.

Fig. 3—Location of Trimmers

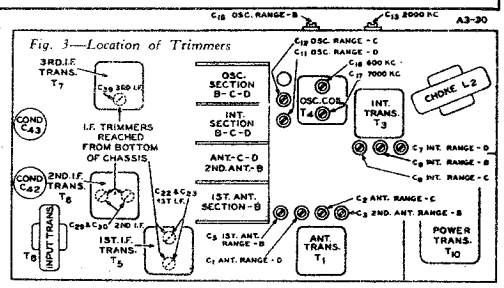

117-234 Volt Power Transformer

Some models are equipped with a 117-234 volt universal power transformer. Connections as shown in Fig. 2 are completed to a special octal socket mounted on the back panel of the chassis. A plug which goes with this socket may then be inserted for either the 117 volt or 234 volt connection.

Models without the electric drive, which are equipped with this transformer, may be used on a power supply of 40 to 60 cycles. If an electric drive motor is used, however, it is important that the set be operated on a 60 cycle power supply only. The reason for this is that the 60 cycle motor in the electric drive panel of this model will not operate satisfactorily at any frequency other than 60 cycle. Consequently, if one of these radios is to be used on a 40 cycle power supply, it will be necessary to change the motor. The motor regularly supplied with the 25 cycle model, is used for this purpose.

If one of these transformers is to be installed in a chassis equipped with a regular transformer, there is a 1⅛ inch round knockout on the back panel which may be removed to permit installation of the octal socket mentioned above.

Twenty-Five Cycle Models

Twenty-five cycle receivers not equipped with an electric motor drive, differ from sixty cycle receivers only in the fact that a different power transformer is used. The twenty-five cycle receiver can be operated satisfactorily from a sixty cycle power supply. However, the reverse is not true—a sixty cycle receiver cannot be operated from a twenty-five cycle power supply.

ELECTRIC DRIVE MODELS—In twenty-five cycle electric drive sets, in addition to the power transformer change mentioned above there is also a twenty-five cycle motor. Since these motors will not operate satisfactorily on a sixty cycle power supply, it follows that the twenty-five cycle electric drive sets cannot be used on sixty cycle power.

VOLTAGES AT SOCKETS

Line Voltage: 117—Volume Control Maximum — Antenna Shorted to Ground
Local-Distance Switch in Distance Position
Readings taken with 1000 Ohm-per-volt meter — Position of Band Switch: Standard Wave

TUBE	FUNCTION	VOLTAGE BETWEEN SOCKET PRONG AND GROUND (Unless otherwise indicated) Prong No. 1	Prong No. 2	Prong No. 3	Prong No. 4	Prong No. 5	Prong No. 6	Prong No. 7	Prong No. 8
6K7—6U7G	R.F.	0	6.1(1)	250	130	10.0(2)		6.1(1)	10.0(2)
6J7—6J7G	1st Det.	0	6.1(1)	250	115	0		6.1(1)	6.0
6C5—6C5G	Osc.	0	6.1(1)	115				6.1(1)	0
6K7—6U7G	1st I.F.	0	6.1(1)	250	130	10.0(2)		6.1(1)	10.0(2)
6K7—6U7G	2nd I.F.	0	6.1(1)	240	130	5.0		6.1(1)	5.0
6H6	2nd Det.	0	6.1(1)					6.1(1)	0
6C5—6C5G	A.V.C.	0	6.1(1)	5(3)				6.1(1)	.5
6C5—6C5G	1st A.F.	0	6.1(1)	145				6.1(1)	6.0
6L6—6L6G	Output	0	6.1(1)	330	250	21(4)		6.1(1)	0
5Y3G	Rectifier	0	4.7(5)		1100(6)		1100(6)		4.7(5)
6G5	Tuning Indicator	Plate to Ground 20(3)		Target to Ground 250		Cathode to Ground 0		Across Heater 6.1 A.C.	

(1) A.C. voltage as read across heater terminals 2 and 7.
(2) Subject to variation.
(3) As read with a 1000 Ohm-per-volt meter (500 volt scale).
(4) Bias as read across L4 or R32, depending on speaker arrangement. See Schematic Diagram.
(5) A.C. voltage as read across filament terminals 2 and 8.
(6) A.C. voltage as read across terminals 4 and 6.

Phonograph Connections

Phonograph connections are made as shown in the schematic circuit diagram Fig. 2. On the front panel of the chassis base is a round knockout 1⅛ inches in diameter. An octal base socket is mounted in this knockout opening and wired as shown in the schematic.

A phono cable assembly may then be purchased (see parts list). On one end of this cable is an octal plug and on the other end is a phonograph-radio switch and double tip jack.

Some models are shipped from the factory equipped with the phono socket. A jumper is inserted in this socket which must be removed if the phonograph installation is made—See Fig. 2.

Glass and Metal Tubes

All sets of this series use a 6H6 metal tube and 5Y3G and 6G5 glass tubes.

It will be noted in the schematic that there are two tube type numbers shown at the other sockets. The "metal" tube sets use the upper tube type numbers which are for metal tubes while the "glass" tube sets use the lower tube type numbers which are for glass tubes.

©John F. Rider, Publisher

MODELS A3,A6 Series
Circuit Data,Socket
Parts List

WELLS-GARDNER & CO.

Circuit

This model is a three band AC operated radio with a tuning range as shown in the specifications above.

Referring to the schematic circuit diagram, Fig. 2, T1 and T2 are the antenna R.F. transformer assemblies, T3 is the interstage R.F. transformer assembly, and T4 is the oscillator coil assembly. The standard wave, 1st and 2nd short wave coils in each assembly are indicated by the letters B, C, and D respectively.

The band switch completes connections to the coils in use. The band switch sections are designated in the schematic as section 1 and section 2. When the switch is in the Range B position, a double tuned antenna R.F. stage is used while for the C and D Ranges a single tuned R.F. stage is used.

A 6K7 tube functions as an R.F. amplifier. The output of this tube is fed into a tuned R.F. stage. The out ut of the latter actuates the control grid of a 6J7 tube which functions as the 1st detector.

A separate type 6C5 tube is employed in the oscillator circuit. The oscillator circuit is always resonant at 456 KC above the frequency to which the R.F. amplifier is tuned.

Two stages of I.F. amplification are employed using 6K7 tubes. The primaries and secondaries of the 1st and 2nd I.F. transformers and the primary of the 3rd I.F. transformer are tuned by small trimmer condensers.

Referring to the 1st and 2nd I.F. transformers T5 and T6 in Fig. 2, it will be noted that there are coupling windings shown below the primaries.

When the selectivity control is in the sharp position, the coupling windings are open-circuited and the loose coupling which exists between the primary and the secondary of these transformers results in high selectivity.

When the selectivity control is in the broad position, the coupling winding which is wound under the primary is connected in series with the secondary. This provides overcoupling which results in a greatly widened resonance curve. Passage of a wide range of audio frequencies is thus obtained.

A type 6H6 twin diode functions as the 2nd detector and AVC tube. Referring to Fig. 2, the 3rd I.F. transformer has two secondary windings, each of which works into one of the 6H6 diodes.

Referring to the circuit associated with the audio winding (lower diode winding—Fig. 2) the audio component is developed across volume control resistor R27 and transmitted through the movable arm to the control grid of the 6C5 1st A.F. amplifier. The DC component of the voltage developed in this circuit is applied through resistor R22 to the control grid of the 6C5 AVC tube.

The AVC voltage developed in the circuit of the upper diode winding is applied through isolating resistors to the control grid circuits of the R.F. and 1st I.F. tubes. The cathode of the AVC diode is connected to the plate of the AVC tube. This tube under no-signal conditions operates at a very low voltage on the plate by virtue of the drop across plate resistor R24. When there is a signal voltage in the audio circuit, the DC component of this voltage, as mentioned above, is applied to the control grid of the AVC tube. This voltage makes the grid more negative and reduces the plate current. The reduction in plate current lessens the drop across the plate resistor and brings the plate to a higher positive potential. This positive potential is applied through resistor R19 to the AVC line, subtracting from the AVC voltage developed across R19. As a consequence of this cancellation, there is practically no AVC voltage applied to the controlled tubes until the AVC tube reaches cut-off after which the plate potential of this tube ceases to become more positive with increasing signal voltage and the AVC functions in the normal manner. The audio output increases rapidly with the input signal for low values of signal input, reaching maximum power output for an input signal of but a few microvolts. At this point the AVC commences to act and further signal input increase causes very little change in output signal level.

Across the volume control resistor R27 is a filter composed of condensers C49 and C50 and resistor R28. At high volume settings, the filter is not effective. At low volume settings, the action of this filter results in an increase of high and low frequency amplitudes relative to the other frequency amplitudes.

The output stage employs two type 6L6G power amplifier tubes in a stage of push-pull amplification. Two type 5Y3G rectifiers are used in the power unit.

The 6G5 tuning indicator tube is employed.

Two single speaker and one dual speaker arrangements are used with this chassis. Connections for each of the three types are shown in the schematic circuit diagram Fig. 2.

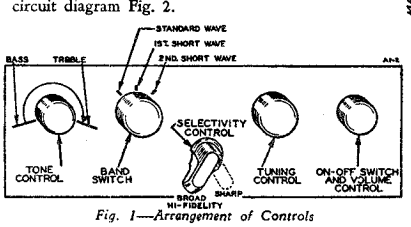

Fig. 1—Arrangement of Controls

Re-alignment is necessary if glass tubes are replaced by their equivalent in metal tubes, or vice versa, in the R.F. and I.F. stages.

- Replacement Parts

Series A3 also Series A6

NOTICE—There is a large letter on the chassis which identifies the set as to major part changes. When ordering parts, please be sure to mention the series number and this large letter.

TRANSFORMERS AND COILS

Part No.	Code	Description	List Price
9A794	T1	Antenna Transformer and Can Assembly—B Range Secondary: C & D Range	$2.00
9A795	T2	Antenna Coil Assembly "B" Range	1.25
9A796	T3	R.F. Interstage Transformer and Can Assembly	2.20
9A797	T4	Oscillator Coil and Can Assembly	$3.60
9A798	T5	1st I.F. Transformer and Can Assembly	2.65
9A799	T6	2nd I.F. Transformer and Can Assembly	2.40
9A800	T7	3rd I.F. Transformer and Can Assembly	2.40
50X34	T8	Input Transformer	1.50
	T9	Output Transformer (See Speakers)	
53X152	T10	117-234 Volt, 40-60 Cycle, Universal Power Transformer	8.70
53X165	T10	117 Volt, 60 Cycle, Power Transformer	6.25
53X166	T10	117 Volt, 25 Cycle, Power Transformer (When replacing a 60 Cycle Transformer with a 25 Cycle Transformer, a 25 Cycle Motor must also be ordered for the Electric Drive Models.)	9.90
52X49	L2	Filter Choke	2.40

CONDENSERS

TUBULAR

Part No.	Code	Capacitance	Voltage	List Price
46X105	C10	.10 mf.	360	$0.20
46X187	C19	.02 mf.	180	.15
46X117	C25	.25 mf.	180	.25
46X80	C26	.05 mf.	180	.15
46X181	C27	.10 mf.	240	.15
46X211	C32	.04 mf.	180	.15
46X114	C33	.004 mf.	600	.15
46X124	C34	.01 mf.	180	.15
46X211	C35	.04 mf.	180	.15
46X217	C36	.10 mf.	360	.20
46X212	C37	.04 mf.	360	.15
46X121	C44	.25 mf.	360	.30
46X211	C46	.04 mf.	180	.15
46X98	C47	.10 mf.	180	.20
46X129	C48	.01 mf.	360	.15
46X200	C50	.04 mf.	180	.15
46X121	C52	.25 mf.	360	.30
46X216	C53	.002 mf.	1800	.15
46X202	C54	.02 mf.	360	.15

ELECTROLYTIC

44X21	C42	30 mf.	450 Wet	1.65
44X36	C43	40 mf.	290 Wet	1.00
45X224	C55	30 mf.	25 Dry	.65

MOLDED

47X63	C4	10 mmf.		.15
47X69	C6	250 mmf.		.15
47X57	C40	100 mmf.		.10
47X56	C41	50 mmf.		.10
47X57	C45	100 mmf.		.10
47X72	C49	25 mmf.		.10
47X65	C51	250 mmf.		.15

TRIMMER

17A77	C1	2-25 mmf.	Range "D" Antenna Trimmer	.45
	C2	2-25 mmf.	Range "C" Antenna Trimmer	
	C3	2-25 mmf.	Range "B" 2nd Antenna Trimmer	
	C5	2-25 mmf.	Range "B" 1st Antenna Trimmer	
17A73	C7	2-25 mmf.	Range "D" Interstage Trimmer	.35
	C8	2-25 mmf.	Range "C" Interstage Trimmer	
	C9	2-25 mmf.	Range "B" Interstage Trimmer	
17A76	C11	2-25 mmf.	Range "D" Oscillator Trimmer	.25
	C12	2-25 mmf.	Range "C" Oscillator Trimmer	
17A75	C13	1300-1700 mmf.	Range "C" Oscillator 2000 KC Adjustment	.50
17A68	C15	1-12 mmf.	Range "B" Oscillator Trimmer	.20
17A69	C16	40-120 mmf.	600 KC Trimmer	.40
	C17	40-100 mmf.	7000 KC Trimmer	
17A70	C22	15-55 mmf.	1st I. F. Trimmers	.40
	C23	15-55 mmf.		
17A70	C29	15-55 mmf.	2nd I. F. Trimmers	.40
	C30	15-55 mmf.		
17A71	C39	15-55 mmf.	3rd I. F. Trimmer	.25

Prices Subject to Change Without Notice.

Part No.	Code	Capacitance	Voltage	List Price
47X80	C14	13 mmf.	Compensating Capacitor	$0.50
47X89	C18	370 mmf.	Iron Clad	.30
47X81	C20	35 mmf.	Iron Clad	.25
47X83	C21	150 mmf.	Iron Clad	.35
47X84	C24	160 mmf.	Iron Clad	.35
47X93	C28	150 mmf.	Iron Clad	.35
47X94	C31	160 mmf.	Iron Clad	.35
47X85	C38	60 mmf.	Iron Clad	.30
14A71	4 Section Gang Condenser (Less Dial and Drive Assembly)			5.90

SPEAKERS

When ordering parts for speakers, specify part number of speaker and letter preceding part number stamped on the speaker.

12A273	12" Dynamic Speaker complete with Output Transformer (T9)—(Series A3) ("B" Arrangement—Fig. 2)	13.10
	Cone and Voice Coil Assembly for above Speaker	6.40
	Output Transformer Only (T9)	3.40
12A301	12" Dynamic Speaker complete with Output Transformer (T9)—(Series A3) ("B" Arrangement—Fig. 2)	13.10
	Cone and Voice Coil Assembly for above Speaker	3.20
	Output Transformer Only (T9)	3.40
12A278	12" Dynamic Speaker complete with Output Transformer (T9)—(Series A6) ("C" Arrangement—Fig. 2)	10.20
	Cone and Voice Coil Assembly for above Speaker	2.80
	Output Transformer Only (T9)	3.05
12A279	12" Dynamic Speaker (T9)—No Output Transformer (Series A6) ("C" Arrangement—Fig. 2)	7.50
	Cone and Voice Coil Assembly for above Speaker	2.80

RESISTORS

CARBON

Part No.	Code	Resistance	Wattage	List Price
C94253	R1	25,000 Ohm	1.0	$0.15
A94502	R2	5,000 Ohm	0.2	.15
A94503	R3	50,000 Ohm	0.2	.15
A94202	R4	2,000 Ohm	0.2	.15
B94451	R5	450 Ohm	0.5	.15
D94203	R6	20,000 Ohm	2.0	.30
D94163	R7	16,000 Ohm	2.0	.30
A95503	R8	50,000 Ohm	0.2	.10
A95205	R9	2 Megohm	0.2	.10
A94401	R10	400 Ohm	0.2	.15
B94503	R11	50,000 Ohm	0.5	.15
A94405	R12	4 Megohm	0.2	.15
A94405	R13	4 Megohm	0.2	.15
A95105	R14	1 Megohm	0.2	.10
A95102	R15	1,000 Ohm	0.2	.10
A95104	R16	100,000 Ohm	0.2	.10
A95104	R17	100,000 Ohm	0.2	.10
A94104	R18	100,000 Ohm	0.2	.15
B94204	R19	200,000 Ohm	0.5	.15
B93150	R20	15 Ohm	0.5	.20
A93254	R21	250,000 Ohm	0.2	.20
A93105	R22	1 Megohm	0.2	.20
B93161	R23	160 Ohm	0.5	.20
A94504	R24	500,000 Ohm	0.2	.15
A94153	R28	15,000 Ohm	0.2	.15
B95703	R29	70,000 Ohm	0.5	.10
A95103	R31	10,000 Ohm	0.2	.10

WIRE WOUND

*43X68	R25	1,250 Ohm	2.0	.85
	R26	5,750 Ohm	8.0	
†43X81	R32	128 Ohm	4.0	.25

VARIABLE

36X238	R27	2 Megohm	Volume Control and Switch	1.00
40X225	R30	1.5 Megohm	Tone Control	.65

* Not used on Series A6—See Fig. 2—Type "C" Speaker Connections.
† Used only on Series A6—See Fig. 2—Type "C" Speaker Connections.

PHONO ATTACHMENT PARTS

Part No.	Description	List Price
13X304	Phono Cable Assembly Complete (Includes Plug, Double-Tip Phono Jack Switch, and Knob)	$2.55
3A266	Phono Socket—Octal (4 Prong)—Must be ordered for chassis not equipped with this socket	.10
6A218	Plug (8 Prong) only, of phono cable	.15
2A445	Phono Switch only, of phono cable	.70
3A12	Phono Jack only, of phono cable	.10
10A90	Knob only, of phono cable	.20

DIAL AND DRIVE ASSEMBLY

DIAL AND DRIVE PARTS WILL BE FOUND IN SPECIAL DIAL AND DRIVE NOTES (see index)

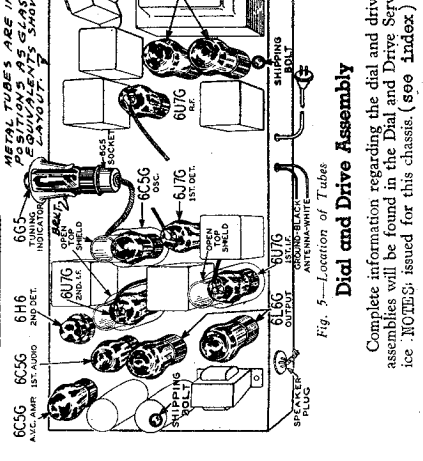

Fig. 5—Location of Tubes

Dial and Drive Assembly

Complete information regarding the dial and drive assemblies will be found in the Dial and Drive Service NOTES issued for this chassis. (see index)

©John F. Rider, Publisher

WELLS-GARDNER & CO.

MODEL A2 Series
Schematic, Phono.
Specs., Sensitivity

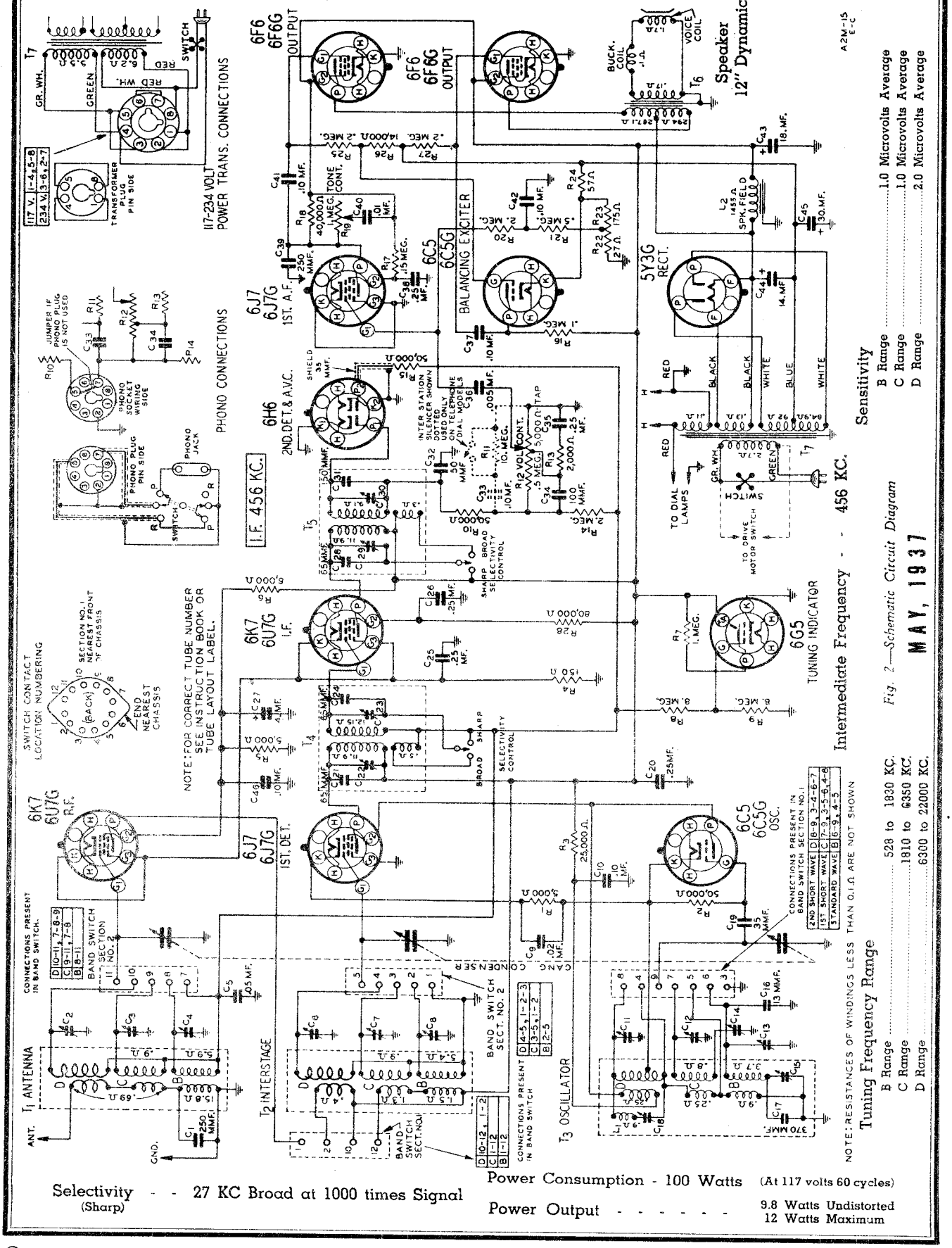

Sensitivity

B Range	1.0 Microvolts Average
C Range	1.0 Microvolts Average
D Range	2.0 Microvolts Average

Intermediate Frequency - - 456 KC.

Tuning Frequency Range

B Range	528 to 1830 KC.
C Range	1810 to 6350 KC.
D Range	6300 to 22000 KC.

NOTE: RESISTANCES OF WINDINGS LESS THAN 0.1Ω ARE NOT SHOWN

Fig. 2—Schematic Circuit Diagram

MAY, 1937

Selectivity - - 27 KC Broad at 1000 times Signal (Sharp)

Power Consumption - 100 Watts (At 117 volts 60 cycles)

Power Output - - - - - - 9.8 Watts Undistorted
12 Watts Maximum

©John F. Rider, Publisher

MODEL A2 Series
Trimmers, Alignment
Circuit Data, Coils

WELLS-GARDNER & CO.

11 TUBE • 3 BAND • ALL WAVE **SERIES A2**

ALIGNMENT PROCEDURE

Volume Control—Maximum All Adjustments.
Selectivity Control—Sharp Position All Adjustments.
Connect Radio Chassis to Ground Post of Signal Generator with a Short Heavy Lead.
Allow Chassis and Signal Generator to "Heat Up" for several minutes.

The following equipment is required for aligning:
An All Wave Signal Generator which will provide an accurately calibrated signal at the test frequencies as listed.
Output Indicating Meter — Non-Metallic Screwdriver.
Dummy Antennas — .1 mf., 200 mmf., and 400 ohms.

STEP (Follow Order as Given)	BAND SWITCH SETTING	DUMMY ANTENNA	SIGNAL GENERATOR FREQUENCY SETTING	SIGNAL GENERATOR CONNECTION AT RADIO	TRIMMERS ADJUSTED See Illustration	PROCEDURE INITIAL STEPS	PROCEDURE ADJUSTMENT
I. F.							
2nd I.F. Adj.	Range B	.1 mf.	456 KC	Grid of I.F. Tube	2nd I.F. (C29) & (C30)	Turn Rotor to Full Open	Adjust to Maximum Output
1st I.F. Adj.	Range B	.1 mf.	456 KC	Grid of 1st Det.	1st I.F. (C22) & (C23)	Turn Rotor to Full Open	Adjust to Maximum Output
RANGE B							
1830 KC	Range B	200 mmf.	1830 KC	Antenna Lead	Oscillator Range B (C13)	Turn Rotor to Full Open	Adjust to Maximum Output
1500 KC	Range B	200 mmf.	1500 KC	Antenna Lead	Ant. Range B (C4) Int. Range B (C8)	Turn Rotor to Max. Output Set Indicator to 1500 KC— See Note A	Adjust to Maximum Output
600 KC	Range B	200 mmf.	600 KC	Antenna Lead	600 KC (C15)	Turn Rotor to Max. Output	Adjust to Maximum Output Rock Rotor — See Note B
RANGE C							
6350 KC	Range C	400 Ohm	6350 KC	Antenna Lead	Oscillator Range C (C12)	Turn Rotor to Full Open	Adjust to Maximum Output
6000 KC	Range C	400 Ohm	6000 KC	Antenna Lead	Antenna Range C (C3) Int. Range C (C7)	Turn Rotor to Max. Output	Adjust to Maximum Output
2000 KC	Range C	400 Ohm	2000 KC	Antenna Lead	2000 KC (C14)	Turn Rotor to Max. Output	Adjust to Maximum Output Rock Rotor — See Note B
RANGE D							
22,000 KC	Range D	400 Ohm	22,000 KC	Antenna Lead	Oscillator Range D (C11)	Turn Rotor to Full Open	Adjust to Maximum Output
20,000 KC	Range D	400 Ohm	20,000 KC	Antenna Lead	Ant. Range D (C2) Int. Range D (C6)	Turn Rotor to Max. Output	Adjust to Maximum Output Rock Rotor — See Note B
7000 KC	Range D	400 Ohm	7000 KC	Antenna Lead	7000 KC (C18)	Turn Rotor to Max. Output	Adjust to Maximum Output Rock Rotor — See Note B

Attenuate the signal from the signal generator to prevent the leveling-off action of the AVC.

After each range is completed, repeat the procedure as a final check.

NOTE A—In sets using the telephone dial tuning, there will be seen inside the telephone dial button ring an escutcheon plate held in place by four screws. Loosen the 2 screws nearest the pointer. An extension of the pointer will be seen protruding over the edge of this escutcheon plate. Move the pointer to the 1500 KC mark on the dial and then tighten the 2 escutcheon screws. (Do not tighten these screws too much.)

In sets using the moving beam of light indicator, there is a moving light assembly held to the front of the drive drum by means of a screw. Loosen this screw and move the light assembly until the beam is at the 1500 KC mark on the dial. Retighten the screw.

NOTE B—Turn the rotor back and forth and adjust the trimmer until the peak of greatest intensity is obtained.

CAUTION—When aligning the short wave bands, be sure NOT to adjust at the image frequency. This can be checked as follows: Let us say the signal generator is set for 5000 KC. The signal will then be heard at 5000 KC on the dial of the radio. The image signal, which is much weaker, will be heard at 5000 less 912 KC, or 4088 KC on the dial. It may be necessary to increase the input signal to hear the image.

NOTICE—Re-alignment is necessary if glass tubes are replaced by their equivalent in metal tubes, or vice versa, in the R.F. and I.F. stages.

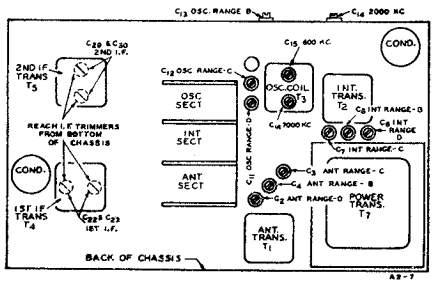

Fig. 3—Location of Trimmers

Circuit

This model is a three band AC operated radio with a tuning range as shown in the specifications above.

Referring to the schematic circuit diagram, Fig. 2, T1 and T2 are the antenna and interstage R.F. transformer assemblies and T3 is the oscillator coil assembly. The standard wave, 1st and 2nd short wave coils in each assembly are indicated by the letters B, C and D respectively.

The band switch completes connections to the coils in use. The band switch sections are designated in the schematic as section 1 and section 2.

The antenna transformer with tuned secondary feeds into a type 6K7 R.F. amplifier tube. The output of this tube is fed through the interstage R.F. transformer with tuned secondary into a 6J7 tube which functions as the 1st detector.

A separate type 6C5 tube is employed in the oscillator circuit. The oscillating circuit is always resonant at 456 KC above the frequency to which the R.F. amplifier is tuned.

One stage of I.F. amplification is employed using a 6K7 tube. The primaries and secondaries of the 1st and 2nd I.F. transformers are tuned by small trimmer condensers.

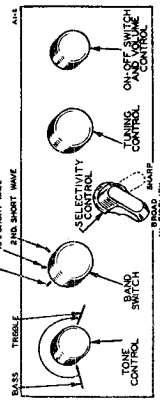

Fig. 1—Arrangement of Controls

Referring to the 1st and 2nd I.F. transformers T4 and T5 in Fig. 2, it will be noted that there is a coupling winding shown below the primary of T4 and below the secondary of T5.

When the selectivity control is in the sharp position, the coupling windings are open circuited and the loose coupling which exists between the primary and secondary of these transformers results in high selectivity.

When the selectivity control is in the broad position, the coupling winding which is wound under the primary in the case of T4 is connected in series with the secondary. In the case of T5, the coupling winding which is wound under the secondary is in series with the primary. This provides overcoupling which results in a greatly widened resonance curve. Passage of a wide range of audio frequencies is thus obtained.

A 6H6 tube functions as a diode 2nd detector. AVC voltage is applied to the control grid circuits of the R.F. and I.F. tubes.

Across the volume control resistor R12 is a filter composed of condensers C34 and C35 and resistor R13. At high volume settings, the filter is not effective. At low volume settings, the action of this filter results in an increase of high and low frequency amplitudes relative to the other frequency amplitudes.

The output of the 2nd detector is applied to the 6J7 1st A. F. tube. The output of this tube is fed thru resistance coupling into the 6F6 output tube shown nearest to it in the schematic.

A portion of the voltage developed across the output tube grid resistor is applied to the control grid of the 6C5 balancing exciter tube. This tube functions as a phase inverter and applies the audio voltage of proper phase and amplitude to the other 6F6 output tube. The two output tubes operate as a stage of Class A push-pull amplification. The balancing exciter tube thus replaces a push-pull input transformer. A dynamic reproducer is employed.

The power unit uses a 5Y3G full wave rectifier. A 6G5 tuning indicator tube is employed.

Glass and Metal Tubes

All sets of this series use a 6H6 metal tube and 5Y3G and 6G5 glass tubes.

It will be noted in the schematic that there are two tube type numbers shown at the other sockets. The "metal" tube sets use the upper tube type numbers which are for metal tubes while the "glass" tube sets use the lower tube type numbers which are for glass tubes.

Re-alignment is necessary if glass tubes are replaced by their equivalent in metal tubes, or vice versa, in the R.F. and I.F. stages.

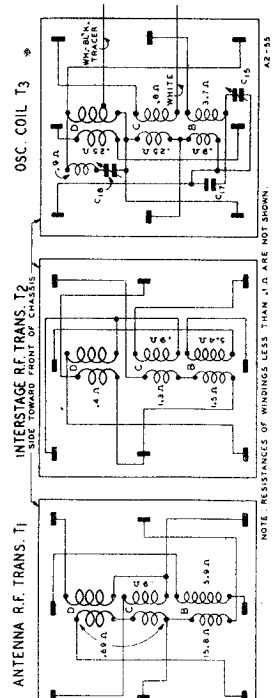

Fig. 6—Coil Terminal Arrangement and DC Resistance of Windings

©John F. Rider, Publisher

WELLS-GARDNER & CO.

MODEL A2 Series
Socket, Voltage
Changes, Data
Parts List

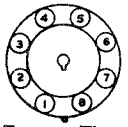

Fig. 7—Octal Tube Terminal Numbering (bottom of socket).

Twenty-Five Cycle Models

The twenty-five cycle receiver differs from the sixty cycle receiver only in the fact that a different power transformer is used.

The twenty-five cycle receiver can be operated satisfactorily from a sixty cycle power supply. However, the reverse is not true—the sixty cycle receiver cannot be operated from a twenty-five cycle power supply.

Phonograph Connections

Phonograph connections are made as shown in the schematic circuit diagram Fig. 2. On the front panel of the chassis base is a round knockout 1⅛ inches in diameter. An octal base socket is mounted in this knockout opening and wired as shown in the schematic.

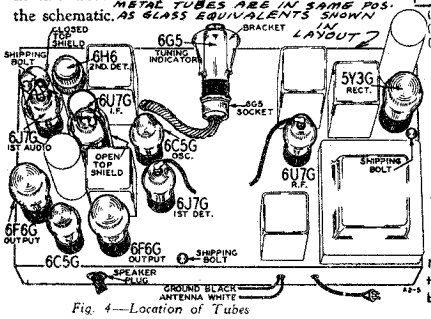

Fig. 4—Location of Tubes

A phono cable assembly may then be purchased (see parts list). On one end of this cable is an octal plug and on the other end is a phonograph-radio switch and double tip jack.

Some models are shipped from the factory equipped with the phono socket. A jumper is inserted in this socket which must be removed if the phonograph installation is made—see Fig. 2.

117-234 Volt Power Transformers

Some models are equipped with a 117-234 volt 40 to 60 cycle power transformer. Connections as shown in Fig. 2 are completed to a special octal socket mounted on the back panel of the chassis. A plug which goes with this socket may then be inserted for either the 117 volt or 234 volt connection.

If one of these transformers is to be installed in a chassis equipped with a regular transformer, there is a 1⅛ inch round knockout on the back panel which may be removed to permit installation of the octal socket mentioned above.

Dial and Drive Assembly

Complete information regarding the dial and drive assemblies will be found in the Dial and Drive Service Notes issued for this chassis. (see index)

Changes in Later Models

Later models of this series have the following changes incorporated in them.

On the first models, the 2nd I.F. Coil was not expanded. In other words, the extra selectivity coupling winding was not incorporated in the early type coil. Models with the letter "C" or any later issue stamped on the chassis use the new type coil with the selectivity coupling winding. Because of the change in coil connections, the selectivity switch used on the late model is not interchangeable with that on the early model.

When ordering parts, therefore, it is important that the issue letter on the chassis be noted and the correct part number as shown in the parts list be specified.

VOLTAGES AT SOCKETS

Line Voltage: 117—Volume Control: Maximum — Antenna Shorted to Ground
Readings taken with 1000 Ohm-per-volt meter. — Position of Band Switch: Standard Wave

TUBE	FUNCTION	VOLTAGE BETWEEN SOCKET PRONG AND GROUND (Unless otherwise indicated)							
		Prong No. 1	Prong No. 2	Prong No. 3	Prong No. 4	Prong No. 5	Prong No. 6	Prong No. 7	Prong No. 8
6K7 6U7G	R.F.	0	6.1(1)	250	105	2.5		6.1(1)	2.5
6J7 6J7G	1st Det.	0	6.1(1)	250	125	0		6.1(1)	5.8
6C5 6C5G	Osc.	0	6.1(1)	125(2)				6.1(1)	0
6K7 6U7G	I.F.	0	6.1(1)	250	100	2.5		6.1(1)	2.5
6H6	2nd Det.—A.V.C.	0	6.1(1)					6.1(1)	0
6J7 6J7G	1st A.F.	0	6.1(1)	110	120	0(3)		6.1(1)	0(3)
6C5 6C5G	Balancing Exciter	0	6.1(1)	100				6.1(1)	18.5
6F6 6F6G	Output	0	6.1(1)	330	250			6.1(1)	0(4)
5Y3G	Rectifier	0	4.8(5)		730(6)		730(6)		4.8(5)
6G5	Tuning Indicator	Plate to Ground 20		Target to Ground 250		Cathode to Ground 0		Across Heater 6.1 A.C.	

(1) A.C. voltage as read across heater terminals 2 and 7.
(2) Subject to variation.
(3) Bias (2.5 volts) as read across resistor R22.
(4) Bias (24 volts) as read across resistors R22, R23, & R24.
(5) A.C. voltage as read across filament terminals 2 and 8.
(6) A.C. voltage as read across terminals 4 and 6.

The R.F. circuit of early models was slightly different from that used in later models. The screen grids of the R.F. and I.F. tubes now supplied by separate voltage sources were formerly connected together and supplied from a single source. On the latter models, resistor R 28 and condenser C 46 were not used.

Series A2 Replacement Parts

NOTICE—There is a large letter on the chassis which identifies the set as to major part changes. When ordering parts, please be sure to mention the series number and this large letter.

MISCELLANEOUS

SOCKETS

Part No.	Description	List Price
3A256	Tube Socket—Octal (7 Prong)	$0.15
3A263	Tube Socket—Octal (8 Prong)	.15
3A261	Tube Socket—Octal (5 Prong)	.10
3A262	Speaker Socket (6 Prong)	.15
13X295	Tuning Eye Tube Socket and Cable Assembly	.55
3A266	Phono Socket—Octal (4 Prong)	.10
3A252	Dual Keyway Socket—Octal (8 Prong)—Universal Power Transformer Connections	.15
6A214	Plug (4 Prong)—Used with above Socket	.25

SPEAKERS

When ordering parts for speakers, specify part number of speaker and letter preceding part number stamped on the speaker.

12A269	12" Dynamic Speaker, complete with Output Trans. (T6). Cone and Voice Coil Assembly for above speaker. Output Transformer only (T6)	7.70 4.60 2.45

KNOBS

Specify Name of Knob & Name & Model of Radio	Volume Control Knob	.15
	Tone Control Knob	.15
	Tuning Control Knob	.15
	Band Switch Knob	.20
	Selectivity Control Knob	.25

GENERAL

25X378	Clamp Bracket for Tuning Eye Tube	.10
32X50	Tube Shield—Closed Top (Used on glass and metal tube chassis)	.15
32X32	Tube Shield—Open Top (Used only on models having glass tubes)	.15
32X51	Tube Shield Base	.10
2X38	Felt Washers (Used Behind Knobs) doz.	.10
8X23	Rubber Cushions (Chassis Mounting)	.10
30X44	Grid Clip only doz.	.10
2A78	Selectivity Switch (Early Type—Used when 2nd I.F. is not expanded)	.40
2A83	Selectivity Switch (Late Type—Used when 2nd I.F. is expanded)	.45
4A36	Terminal Strip (1 lug insulated, one lug used for mtg.)	.10
4A63	Terminal Strip (3 lugs insulated, mounting hole used)	.10
4A68	Terminal Strip (3 lugs insulated)	.10
13X214	Antenna and Ground Lead Assembly	.30
13X80	Line Cord and Plug	.50
2A79	Band Switch (2 section, 3 position)	1.65

TRANSFORMERS AND COILS

Part No.	Code	Description	List Price
9A779	T1	Antenna Transformer and Can Assembly	$2.15
9A780	T2	R.F. Interstage Transformer and Can Assembly	2.30
9A781	T3	Oscillator Coil and Can Assembly	2.50
9A782	T4	1st I.F. Transformer and Can Assembly	2.40
9A783	T5	2nd I.F. Transformer and Can Assembly (Early Type—Without selectivity coupling winding)	2.25
9A857	T5	2nd I.F. Transformer and Can Assembly (Late Type—With selectivity coupling winding)	2.25
	T6	Output Transformer (See "Speakers")	
53X148	T7	117 Volt, 60 Cycle, Standard Power Transformer	6.45
53X149	T7	117 Volt, 25 Cycle, Standard Power Transformer	7.15
53X150	T7	117-234 Volt, 40-60 Cycle, Universal Power Transformer	5.75

CONDENSERS

TUBULAR

Part No.	Code	Capacitance	Voltage	List Price
46X80	C5	.05 mf.	180	$0.15
46X187	C9	.02 mf.	180	.15
46X105	C10	.10 mf.	360	.20
46X121	C20	.25 mf.	360	.30
46X117	C25	.25 mf.	180	.25
46X121	C26	.25 mf.	360	.30
46X98	C33	.10 mf.	180	.20
46X197	C35	.25 mf.	180	.25
46X147	C36	.005 mf.	360	.15
46X105	C37	.10 mf.	360	.20
46X121	C38	.25 mf.	360	.30
46X161	C40	.01 mf.	600	.15
46X105	C41	.10 mf.	360	.20
46X98	C42	.10 mf.	180	.20
*46X181	C46	.10 mf.	240	.15

CONDENSERS (Cont.)

ELECTROLYTIC

Part No.	Code	Capacitance	Voltage	List Price
45X223	C27	4 mf.	150 Dry	$0.75
44X11	C43	18 mf.	290 Wet	1.10
44X30	C44	14 mf.	450 Wet	1.00
45X222	C45	30 mf.	25 Dry	.95

MOLDED

47X69	C1	250 mmf.		.15
47X81	C19	35 mmf.		.25
47X56	C32	50 mmf.		.10
47X57	C34	100 mmf.		.10
47X65	C39	250 mmf.		.15

TRIMMER

17A73	C2	2-25 mmf.	Range "D" Antenna Trimmer	.35
	C3	2-25 mmf.	Range "C" Antenna Trimmer	
	C4	2-25 mmf.	Range "B" Antenna Trimmer	
17A73	C6	2-25 mmf.	Range "D" Interstage Trimmer	.35
	C7	2-25 mmf.	Range "C" Interstage Trimmer	
	C8	2-25 mmf.	Range "B" Interstage Trimmer	
17A76	C11	2-25 mmf.	Range "D" Oscillator Trimmer	.25
	C12	2-25 mmf.	Range "C" Oscillator Trimmer	
17A68	C13	1-12 mmf.	Range "B" Oscillator Trimmer	.20
17A75	C14	1300-1700 mmf.	2000 KC Adjustment	.50
17A69	C15	40-120 mmf.	Oscillator 600 KC Adjustment	.40
	C18	40-100 mmf.	Oscillator 7000 KC Adjustment	
17A70	C22	15-55 mmf.	1st I.F. Trimmer	.40
	C23	15-55 mmf.		
17A70	C29	15-55 mmf.	2nd I.F. Trimmer	.40
	C30	15-55 mmf.		

MISCELLANEOUS

47X80	C16	13 mmf.	Compensating Capacitor	.50
47X89	C17	370 mmf.	Iron Clad	.30
47X91	C21	65 mmf.	Iron Clad	.25
47X91	C24	65 mmf.	Iron Clad	.25
47X91	C28	65 mmf.	Iron Clad	.25
47X83	C31	150 mmf.	Iron Clad	.35
14A70	3 Section Gang Condenser (less dial and drive assembly)			4.20

* Used on late models only.

RESISTORS

CARBON

Part No.	Code	Resistance	Wattage	List Price
A94502	R1	5,000 Ohm	0.2	$0.15
A94503	R2	50,000 Ohm	0.2	.15
C94253	R3	25,000 Ohm	1.0	.15
A94151	R4	150 Ohm	0.2	.15
E94502	R5	5,000 Ohm	3.0	.30
G94602	R6	6,000 Ohm	5.0	.40
A95105	R7	1 Megohm	0.2	.15
A94805	R8	8 Megohm	0.2	.15
A94805	R9	8 Megohm	0.2	.15
A95503	R10	50,000 Ohm	0.2	.10
A95106	R11	10 Megohm	0.2	.10
A94202	R13	2,000 Ohm	0.2	.15
A95205	R14	2 Megohm	0.2	.10
A95503	R15	50,000 Ohm	0.2	.10
A94104	R16	100,000 Ohm	0.2	.15
A94154	R17	150,000 Ohm	0.2	.15
B94403	R18	40,000 Ohm	0.5	.15
A95205	R20	2 Megohm	0.2	.10
A95504	R21	500,000 Ohm	0.2	.10
B93570	R24	57 Ohm	0.5	.20
A93204	R25	200,000 Ohm	0.2	.20
A93143	R26	14,000 Ohm	0.2	.20
A95204	R27	200,000 Ohm	0.2	.10
*B94803	R28	80,000 Ohm	0.5	.15

WIRE WOUND

43X77	R22	27 Ohm	0.25	.35
	R23	175 Ohm	2.0	

VARIABLE

36X236	R12	500,000 Ohm	Volume Control and On-Off Switch	1.00
40X224	R19	1 Megohm	Tone Control	.65

* Used on late models only.

PHONO ATTACHMENT PARTS

Part No.	Description	List Price
13X298	30" Phono Cable Assembly Complete (Includes Plug, Double-tip Phono Jack, Switch, and Knob)	$2.85
3A266	Phono Socket—Octal (4 Prong)—Must be ordered for Chassis not equipped with this socket	.10
6A218	Plug (8 Prong) Only of Phono Cable	.15
3A12	Phono Jack Only of Phono Cable	.10
2A50	Phono Switch Only of Phono Cable	.70
18A90	Knob Only of Phono Cable	.20

DIAL AND DRIVE PARTS WILL BE FOUND IN SPECIAL DIAL AND DRIVE NOTES. (see index)

Prices Subject to Change Without Notice.

©John F. Rider, Publisher

MODEL A4 Series
Phono., Coils
Parts List

WELLS-GARDNER & CO.

Series A4 - Replacement Parts

NOTICE—There is a large letter on the chassis which identifies the set as to major part changes. When ordering parts, please be sure to mention the series number and this large letter.

MISCELLANEOUS

SOCKETS

Part No.	Description	List Price
3A262	Speaker Socket (6 Prong)	$0.15
3A261	Tube Socket—Octal (5 Prong)	.10
3A256	Tube Socket—Octal (7 Prong)	.15
3A263	Tube Socket—Octal (8 Prong)	.15
3A266	Phono Socket—Octal (4 Prong)	.10
13X295	Tuning Eye Tube Socket and Cable Assembly	.55
3A252	Dual Keyway Socket (8 Prong)—Universal Transformer Connections	.15
6A214	Plug (4 Prong)—Used with above Socket	.25

SPEAKERS

When ordering parts for speakers, specify part number of speaker and letter preceding part number stamped on the speaker.

12A277	8" Dynamic Speaker complete with Output Trans. (T6)	4.65
	Cone and Voice Coil Assembly for above Speaker	2.75
	Output Transformer only	2.00
12A288	8" Dynamic Speaker complete with Output Trans. (T6)	6.30
	Cone and Voice Coil Assembly for above Speaker	2.75
	Output Transformer only	2.45

KNOBS

Specify name of knob & name & model of radio

Selectivity Control	.25
Band Change Switch	.20
Tuning Control	.15
Volume Control	.15
Tone Control	.15

GENERAL

25X378	Clamp Bracket for Tuning Eye Tube	.10
8X23	Rubber Cushions (Chassis Mounting)	.10
2X38	Felt Washers (Used behind Knobs) doz.	.10
32X50	Tube Shield (Closed Top)	.15
25X375	Chassis Mounting Foot	.10
30X44	Grid Clip Only doz.	.10
2A91	Band Change Switch	.90
2A85	Dial Light Switch (Used with above Switch on Phantom Light Dials only)	.30
2A78	Selectivity Switch	.40
4A68	Terminal Strip (3 Lugs Insulated)	.10
4A18	Terminal Strip (2 Lugs Insulated)	.10
32X5	Tube Shield Base	.10
13X88	Line Cord and Plug Assembly	.50
13X214	Antenna and Ground Lead Assembly	.30

TRANSFORMERS AND COILS

			List Price
9A813	T1	Antenna Transformer and Can Assembly "B" Secondary—"D" Range	$1.65
9A812	T2	1st Antenna Coil Assembly "B" Range	1.30
9A814	T3	Oscillator Coil and Can Assembly	2.80
9A815	T4	1st I.F. Transformer and Can Assembly	1.80
9A816	T5	2nd I.F. Transformer and Can Assembly	1.50
	T6	Output Transformer (See "Speakers")	
53X144	T7	117 Volt, 60 Cycle Power Transformer	3.10
53X145	T7	117 Volt, 25 Cycle Power Transformer	5.20
53X146	T7	117-234 Volt, 40-60 Cycle Universal Power Transformer	4.35

CONDENSERS

TUBULAR

Part No.	Code	Capacitance	Voltage	List Price
46X80	C6	.05 mf.	180	$0.15
46X120	C15	.01 mf.	360	.15
46X187	C16	.02 mf.	180	.15
46X212	C17	.04 mf.	360	.15
46X187	C22	.02 mf.	180	.15
46X202	C23	.03 mf.	360	.15
46X105	C30	.10 mf.	360	.20
46X147	C32	.005 mf.	360	.15
46X98	C34	.10 mf.	180	.20
46X202	C35	.02 mf.	360	.15
46X98	C36	.10 mf.	180	.20
46X100	C37	.002 mf.	600	.15
46X108	C38	.05 mf.	600	.20

ELECTROLYTIC

					List Price
44X35	C39	30 mf.	260	Wet	.75
44X31	C40	12 mf.	340	Wet	.80

Part No.	Code		Description	List Price
MOLDED				
47X69	C1	250 mmf.		.15
47X63	C5	10 mmf.		.15
47X49	C7	7 mmf.		.15
47X63	C13	10 mmf.		.15
47X53	C14	35 mmf.		.10
47X56	C28	50 mmf.		.10
47X56	C29	50 mmf.		.10
47X65	C33	250 mmf.		.15
TRIMMER				
17A74	C2	2-25 mmf.	1st Antenna Range "B"	.10
17A76	C3	2-25 mmf.	Range "D" Antenna	.25
	C4	2-25 mmf.	2nd Antenna Range "B"	
17A35	C8	40-100 mmf.	6000 KC Trimmer	$0.45
	C9	250-550 mmf.	600 KC Trimmer	
17A76	C11	2-25 mmf.	Range "D" Oscillator	.25
	C12	2-25 mmf.	Range "B" Oscillator	
17A57	C19	50-120 mmf.	1st I.F. Trimmer	.35
	C20	50-120 mmf.		
17A34	C25	70-150 mmf.	2nd I.F. Trimmer	.40
	C26	150-250 mmf.		
MISCELLANEOUS				
14A70		3 Gang Condenser Less Dial and Drive Assembly		4.55

RESISTORS

CARBON

Part No.	Code	Resistance	Wattage	List Price
A95402	R1	4,000 Ohm	0.2	$0.10
A94104	R2	100,000 Ohm	0.2	.15
A94104	R3	100,000 Ohm	0.2	.15
A94251	R4	250 Ohm	0.2	.15
C94203	R5	20,000 Ohm	1.0	.15
C94203	R6	20,000 Ohm	1.0	.15
B94203	R7	20,000 Ohm	0.5	.15
A94405	R8	4 Megohm	0.2	.15
A94126	R9	12 Megohm	0.2	.15
A95105	R10	1 Megohm	0.2	.10
A95503	R11	50,000 Ohm	0.2	.10
A95205	R12	2 Megohm	0.2	.10
A95504	R17	500,000 Ohm	0.2	.10
A95205	R18	2 Megohm	0.2	.10
A95503	R19	50,000 Ohm	0.2	$0.10
A95154	R20	150,000 Ohm	0.2	.10
A95254	R21	250,000 Ohm	0.2	.10

Part No.	Code	Resistance	Wattage	List Price
WIRE WOUND				
43X76	R15	26 Ohm	0.25 } Armored Wire Wound	.35
	R16	239 Ohm	2.0 }	
VARIABLE				
36X235	R14	.5 Megohm	Volume Control and Switch	.90
40X223	R22	.15 Megohm	Tone Control	.45

PHONO ATTACHMENT PARTS

Part No.	Description	List Price
13X298	30" Phono Cable Assembly Complete (includes Plug, Double-tip Phono Jack, Switch, and Knob)	$2.55
3A266	Phono Socket—Octal (4 Prong)—Must be ordered for Chassis not equipped with this Socket	.10
6A218	Plug (4 Prong) only for Phono Cable	.15
3A12	Phono Jack only of Phono Cable	.10
2A50	Phono Switch only of Phono Cable	.70
10A90	Knob only of Phono Cable	.20

DIAL AND DRIVE ASSEMBLY

DIAL AND DRIVE PARTS WILL BE FOUND IN SPECIAL DIAL AND DRIVE Notes (see index)

Prices Subject to Change Without Notice.

Dial and Drive Assembly

Complete information regarding the dial and drive assemblies will be found in the Dial and Drive Service Notes for this chassis. (see index)

Phonograph Connections

Phonograph connections are made as shown in Fig. 7. On the side panel of the chassis base is a round knockout 1⅛ inch in diameter. An octal base socket is mounted in this knockout opening and wired as illustrated.

A phono cable assembly may then be purchased (see parts list). On one end of this cable is an octal plug and on the other end is a phonograph-radio switch and double tip jack.

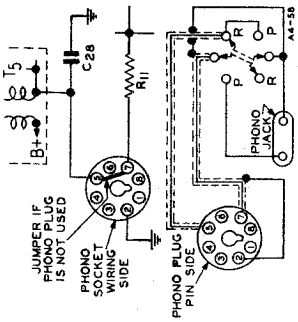

Fig. 7—Phonograph Connections

117-234 Volt Power Transformer

Some models are equipped with a 117-234 volt 40 to 60 cycle power transformer. Connections as shown in Fig. 2 are completed to a special octal socket mounted on the back panel of the chassis. A plug which goes with this socket may then be inserted for either the 117 volt or 234 volt connection.

If one of these transformers is to be installed in a chassis equipped with a regular transformer, there is a 1⅛ inch round knockout on the back panel which may be removed to permit installation of the octal socket mentioned above.

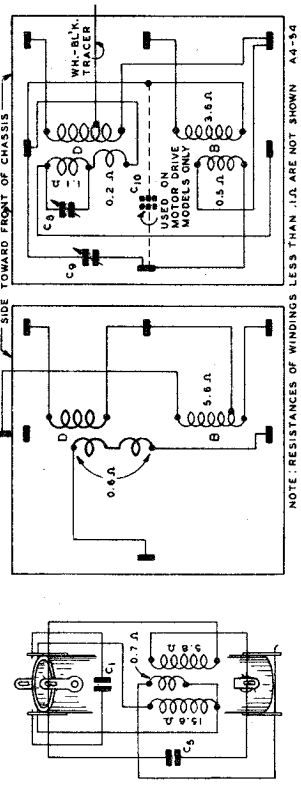

Fig. 4—Coil Terminal Arrangement and D.C. Resistance of Windings

©John F. Rider, Publisher

WELLS-GARDNER & CO.

MODEL A4 Series
Schematic, Specs.
Sensitivity

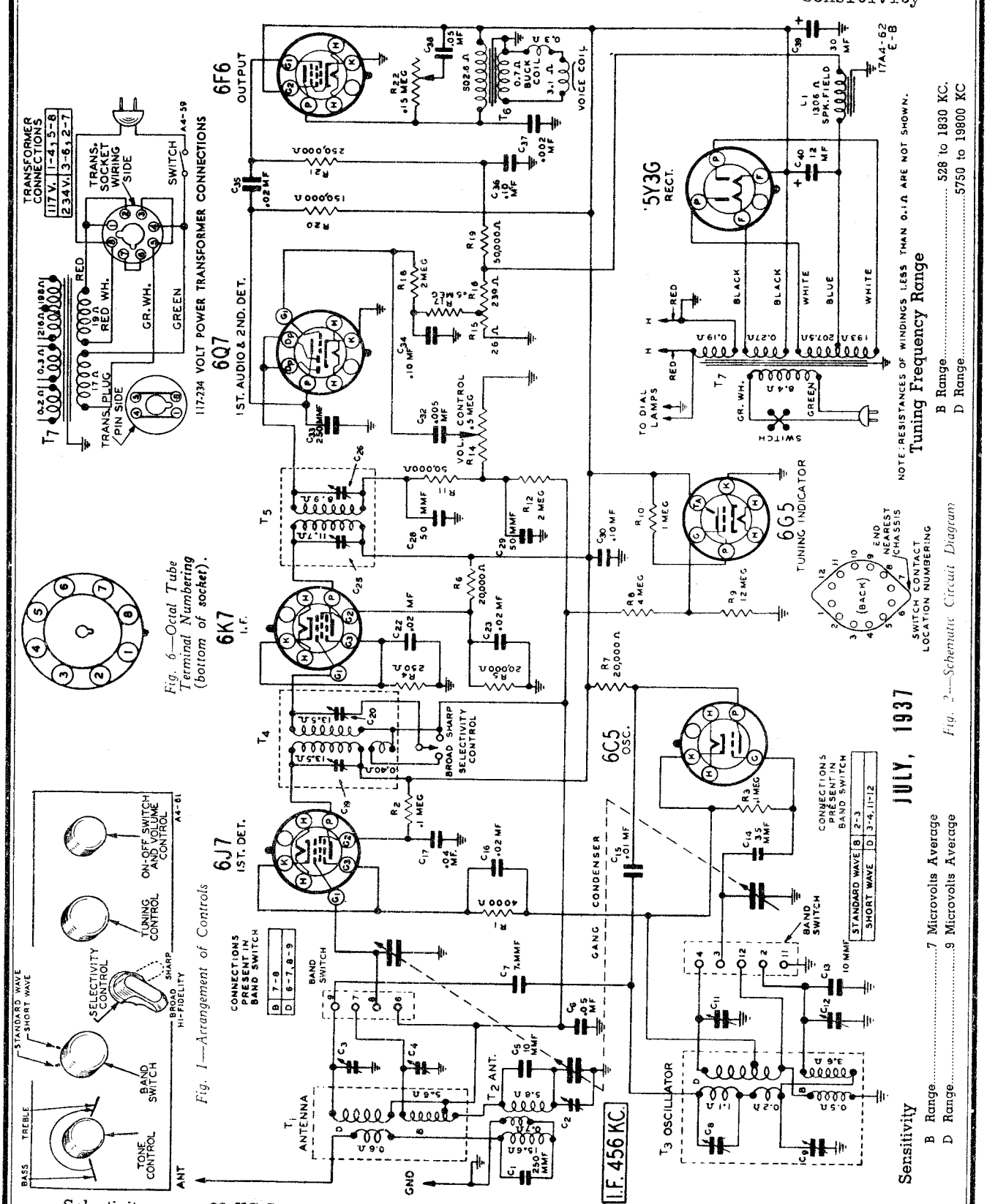

Fig. 1—Arrangement of Controls

Fig. 2—Schematic Circuit Diagram

Fig. 6—Octal Tube Terminal Numbering (bottom of socket).

NOTE: RESISTANCES OF WINDINGS LESS THAN 0.1Ω ARE NOT SHOWN.

Tuning Frequency Range

B Range	528 to 1830 KC.
D Range	5750 to 19800 KC

Sensitivity

B Range	7 Microvolts Average
D Range	9 Microvolts Average

JULY, 1937

Selectivity (Sharp) - - 28 KC Broad at 1000 times Signal

Intermediate Frequency - - - - - - - - 456 KC.

Speaker - - - - - - - - - - - - 8" Dynamic

Power Consumption - - 67 Watts (At 117 volts 60 cycles)

Power Output - - - - - - - 2.5 Watts Undistorted
4.5 Watts Maximum

©John F. Rider, Publisher

MODEL A4 Series
Trimmers, Alignment
Circuit Data, Socket

WELLS-GARDNER & CO.

SERIES A4

7 TUBE • 2 BAND

ALIGNMENT PROCEDURE

Volume Control—Maximum All Adjustments.
Selectivity Control—Sharp Position All Adjustments.
Connect Radio Chassis to Ground Post of Signal Generator With a Short Heavy Lead.
Allow Chassis and Signal Generator to "Heat Up" for Several Minutes.

The following equipment is required for aligning:
An All Wave Signal Generator which will provide an accurately calibrated signal at the test frequencies as listed.
Output Indicating Meter; Non-Metallic Screwdriver.
Dummy Antennas — .1 mf., 200 mmf., and 400 ohms.

STEP (Follow Order as Given)	BAND SWITCH SETTING	DUMMY ANTENNA	SIGNAL GENERATOR FREQUENCY SETTING	SIGNAL GENERATOR CONNECTION AT RADIO	TRIMMERS ADJUSTED See Illustration	PROCEDURE INITIAL STEPS	PROCEDURE ADJUSTMENT
I.F.							
2nd I.F.	Range B	.1 mf.	456 KC	Grid of I.F. Tube	2nd I.F. (C25) & (C26)	Turn Rotor to Full Open	Adjust to Maximum Output
1st I.F.	Range B	.1 mf.	456 KC	Grid of 1st Det.	1st I.F. (C19) & (C20)	Turn Rotor to Full Open	Adjust to Maximum Output
Range B							
1830 KC	Range B	200 mmf.	1830 KC	Antenna Lead	Oscillator Range B (C12)	Turn Rotor to Full Open	Adjust to Maximum Output
1500 KC	Range B	200 mmf.	1500 KC	Antenna Lead	1st Ant. Range B (C2) 2nd Ant. Range B (C4)	Turn Rotor to Max. Output Set Indicator to 1500 KC—See Note A	Adjust to Maximum Output
600 KC	Range B	200 mmf.	600 KC	Antenna Lead	600 KC (C9)	Turn Rotor to Max. Output	Adjust to Maximum Output Rock Rotor—See Note B
Range D							
19800 KC	Range D	400 ohm	19800 KC	Antenna Lead	Oscillator Range D (C11)	Turn Rotor to Full Open	Adjust to Maximum Output
16000 KC	Range D	400 ohm	16000 KC	Antenna Lead	Ant. Range D (C3)	Turn Rotor to Max. Output	Adjust to Maximum Output Rock Rotor—See Note B
6000 KC	Range D	400 ohm	6000 KC	Antenna Lead	6000 KC (C8)	Turn Rotor to Max. Output	Adjust to Maximum Output Rock Rotor—See Note B

Attenuate the signal from the signal generator to prevent the leveling-off action of the AVC.

After each range is completed, repeat the procedure as a final check.

NOTE A—In sets using the moving beam of light indicator, there is a moving light assembly held to the front of the drive drum by means of a screw. Loosen this screw and move the light assembly until the beam is at the 1500 KC mark on the dial. Retighten the screw.

In sets using a pointer or any other type of dial mechanism, it will be necessary to adjust the position of the indicator until it is at the 1500 KC mark.

NOTE B—Turn the rotor back and forth and adjust the trimmer until the peak of greatest intensity is obtained.

CAUTION—When aligning the short wave band, be sure NOT to adjust at the image frequency. This can be checked as follows: Let us say the signal generator is set for 15,000 KC. The signal will then be heard at 15,000 on the dial of the radio. The image signal, which is much weaker, will be heard at 15,000 less 912 KC, or 14,088 KC on the dial. It may be necessary to increase the input signal to hear the image.

Notice—Re-alignment is necessary if glass tubes are replaced by their equivalent in metal tubes, or vice versa, in the R.F. and I.F. stages.

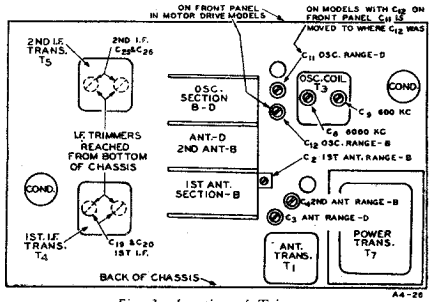

Fig. 3—Location of Trimmers

Circuit

This model is a two band AC operated radio with a tuning range as shown in the specifications above.

Referring to the schematic circuit diagram, Fig. 2, T1 and T2 are the antenna coil assemblies and T3 is the oscillator coil assembly. The standard wave and short wave coils in each assembly are indicated by the letters B and D respectively.

The band switch completes connections to the coils in use. When it is in the Range B position, a double tuned antenna R.F. stage is used while for the D Range, a single tuned secondary is used.

A type 6J7 tube functions as the 1st detector.

A separate type 6C5 tube is employed in the oscillator circuit. The oscillating circuit is always resonant at 456 KC above the frequency to which the R.F. amplifier is tuned.

One stage of I.F. amplification is employed using a 6K7 tube. The primaries and secondaries of the 1st and 2nd I.F. transformers are tuned by small trimmer condensers.

Referring to Fig. 2, it will be noted that there is a coupling winding connected in series with the secondary of I.F. transformer T4. When the selectivity control is in the sharp position, the coupling winding is open circuited and the loose coupling which exists between the primary and secondary of this transformer results in high selectivity.

When the selectivity control is in the broad position, the coupling winding which is wound under the primary is connected in series with the secondary. This provides overcoupling which results in a greatly widened resonance curve. Passage of a wide range of audio frequencies is thus obtained.

A type 6Q7 duo-diode triode functions as the second detector and a one stage audio amplifier. AVC voltage is applied to the 1st detector and I.F. tubes.

Resistance coupling is used between the 1st audio stage and the output stage which employs a type 6F6 ouput pentode tube. A dynamic reproducer is used.

The power unit uses a 5Y3G full wave rectifier. A 6G5 tuning indicator tube is employed.

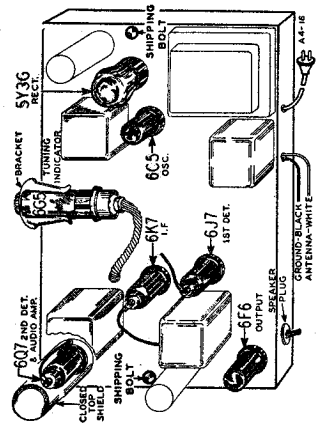

Fig. 5—Location of Tubes

Twenty-Five Cycle Models

The twenty-five cycle receiver differs from the sixty cycle receiver only in the fact that a different power transformer is used.

The twenty-five cycle receiver can be operated satisfactorily from a sixty cycle power supply. However, the reverse is not true, the sixty cycle receiver cannot be operated from a twenty-five cycle power supply.

VOLTAGES AT SOCKETS

Line Voltage: 117—Volume Control: Maximum
Readings taken with 1000 Ohm-per-volt meter
Antenna Shorted to Ground
Position of Band Switch: Standard Wave

TUBE	FUNCTION	VOLTAGE BETWEEN SOCKET PRONG AND GROUND (Unless otherwise indicated) Prong No. 1	Prong No. 2	Prong No. 3	Prong No. 4	Prong No. 5	Prong No. 6	Prong No. 7	Prong No. 8
6J7	1st Det.	0	6.2(1)	230	145	9.5		6.2(1)	9.5
6K7	I.F.	0	6.2(1)	230	100	2.0		6.2(1)	2.0
6C5	Osc.	0	6.2(1)	140				6.2(1)	0
6Q7	1st Audio & 2nd Det.	0	6.2(1)	100				6.2(1)	0(2)
6F6	Power Amp.	0	6.2(1)	216	230			6.2(1)	0(3)
5Y3G	Rectifier	0	5.0(4)		630(5)		630(5)		5.0(4)
6G5	Tuning Indicator	Plate to Ground 20		Target to Ground 230		Cathode to Ground 0		Across Heater 6.2 A.C.	

(1) A.C. voltage as read across heater terminals 2 and 7.
(2) Bias (1.5 volts) as read across resistor R15.
(3) Bias (14 volts) as read across resistors R15 and R16.
(4) A.C. voltage as read across heater terminals 2 and 8.
(5) A.C. voltage as read across terminals 4 and 6.

©John F. Rider, Publisher

MODEL A5 Series
Schematic, Specs.
Sensitivity, Phono.

WELLS-GARDNER & CO.

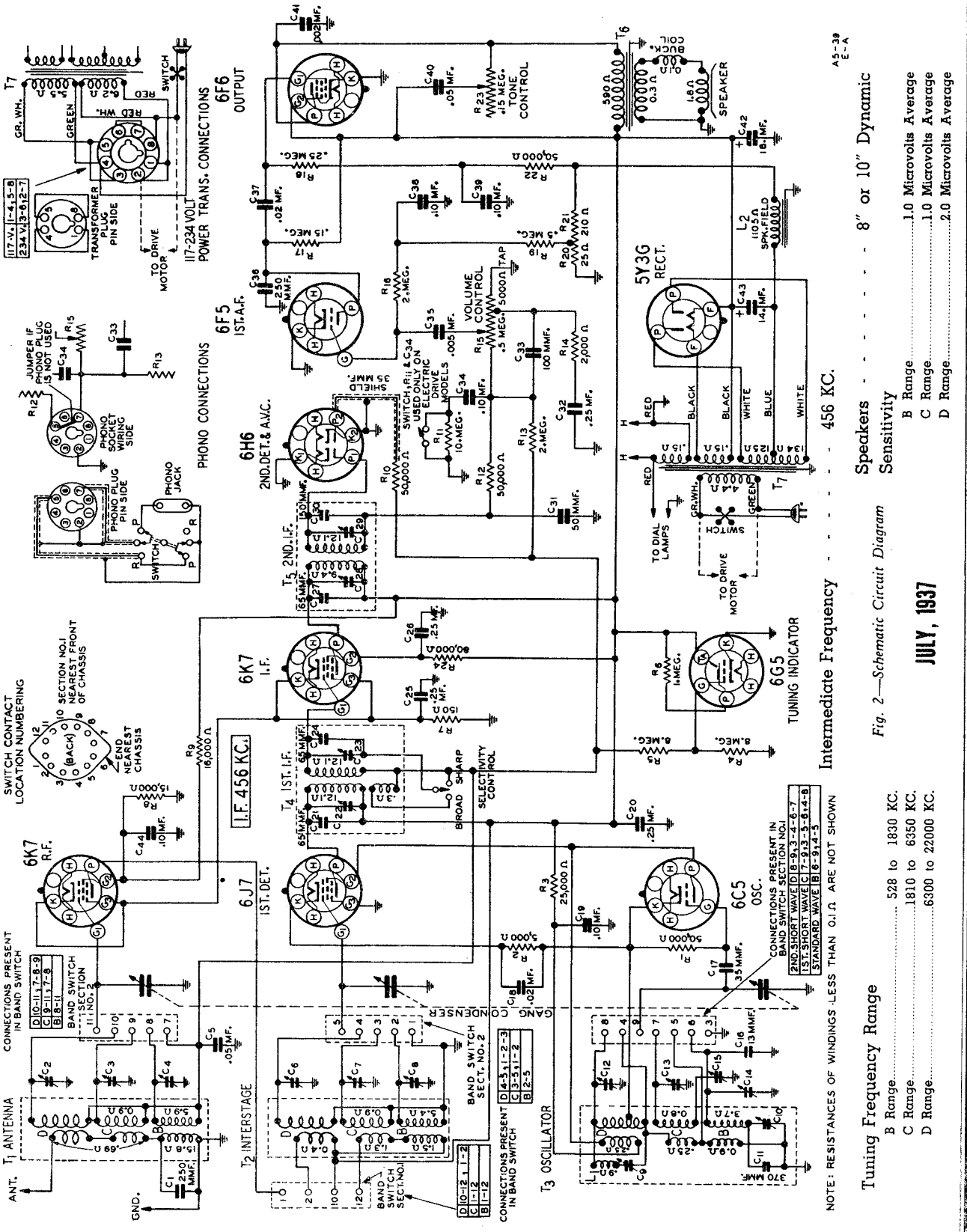

Fig. 2—*Schematic Circuit Diagram*

JULY, 1937

Speakers - - - - - - - - - 8" or 10" Dynamic

Sensitivity

B Range.....1.0 Microvolts Average
C Range.....1.0 Microvolts Average
D Range.....2.0 Microvolts Average

Intermediate Frequency - - - - - - - - 456 KC.

Tuning Frequency Range

B Range.....528 to 1830 KC.
C Range.....1810 to 6350 KC.
D Range.....6300 to 22000 KC.

NOTE: RESISTANCES OF WINDINGS LESS THAN 0.1 Ω ARE NOT SHOWN

Power Output - - - - - - - 3.0 Watts Undistorted
5.0 Watts Maximum

Power Consumption - 75 Watts (At 117 volts 60 cycles)

Selectivity - 27 KC Broad at 1000 times Signal
(Sharp)

©John F. Rider, Publisher

MODEL A5 Series
Trimmers, Alignment
Circuit Data, Voltage

WELLS-GARDNER & CO.

9 TUBE • 3 BAND • ALL WAVE SERIES A5

ALIGNMENT PROCEDURE

Volume Control—Maximum All Adjustments.
Selectivity Control—Sharp Position All Adjustments.
Connect Radio Chassis to Ground Post of Signal Generator With a Short Heavy Lead.
Allow Chassis and Signal Generator to "Heat Up" for Several Minutes.

The following equipment is required for aligning:
An All Wave Signal Generator which will provide an accurately calibrated signal at the test frequencies as listed.
Output Indicating Meter; Non-Metallic Screwdriver.
Dummy Antennas — .1 mf., 200 mmf., and 400 ohms.

STEP (Follow Order as Given)	BAND SWITCH SETTING	DUMMY ANTENNA	SIGNAL GENERATOR FREQUENCY SETTING	SIGNAL GENERATOR CONNECTION AT RADIO	TRIMMERS ADJUSTED See Illustration	PROCEDURE INITIAL STEPS	PROCEDURE ADJUSTMENT
I.F.							
2nd I.F. Adj.	Range B	.1 mf.	456 KC	Grid of I.F. Tube	2nd I.F. (C28) & (C29)	Turn Rotor to Full Open	Adjust to Maximum Output
1st I.F. Adj.	Range B	.1 mf.	456 KC	Grid of 1st Det.	1st I.F. (C22) & (C23)	Turn Rotor to Full Open	Adjust to Maximum Output
RANGE B							
1830 KC	Range B	200 mmf.	1830 KC	Antenna Lead	Oscillator Range B (C14)	Turn Rotor to Full Open	Adjust to Maximum Output
1500 KC	Range B	200 mmf.	1500 KC	Antenna Lead	Ant. Range B (C4) Int. Range B (C8)	Turn Rotor to Max. Output Set Indicator to 1500 KC— See Note A	Adjust to Maximum Output
600 KC	Range B	200 mmf.	600 KC	Antenna Lead	600 KC (C10)	Turn Rotor to Max. Output	Adjust to Maximum Output Rock Rotor — See Note B
RANGE C							
6350 KC	Range C	400 Ohm	6350 KC	Antenna Lead	Oscillator Range C (C13)	Turn Rotor to Full Open	Adjust to Maximum Output
6000 KC	Range C	400 Ohm	6000 KC	Antenna Lead	Antenna Range C (C3) Int. Range C (C7)	Turn Rotor to Max. Output	Adjust to Maximum Output
2000 KC	Range C	400 Ohm	2000 KC	Antenna Lead	2000 KC (C15)	Turn Rotor to Max. Output	Adjust to Maximum Output Rock Rotor — See Note B
RANGE D							
22,000 KC	Range D	400 Ohm	22,000 KC	Antenna Lead	Oscillator Range D (C12)	Turn Rotor to Full Open	Adjust to Maximum Output
20,000 KC	Range D	400 Ohm	20,000 KC	Antenna Lead	Ant. Range D (C2) Int. Range D (C6)	Turn Rotor to Max. Output	Adjust to Maximum Output Rock Rotor — See Note B
7000 KC	Range D	400 Ohm	7000 KC	Antenna Lead	7000 KC (C9)	Turn Rotor to Max. Output	Adjust to Maximum Output Rock Rotor — See Note B

Attenuate the signal from the signal generator to prevent the leveling-off action of the AVC.

After each range is completed, repeat the procedure as a final check.

NOTE A—In sets using the telephone dial tuning, there will be seen inside the telephone dial button ring an escutcheon plate held in place by four screws. Loosen the 2 screws nearest the pointer. An extension of the pointer will be seen protruding over the edge of this escutcheon plate. Move the pointer to the 1500 KC mark on the dial and then tighten the 2 escutcheon screws. (Do not tighten these screws too much.)

In sets using the moving beam of light indicator, there is a moving light assembly held to the front of the drive drum by means of a screw. Loosen this screw and move the light assembly until the beam is at the 1500 KC mark on the dial. Retighten the screw.

NOTE B—Turn the rotor back and forth and adjust the trimmer until the peak of greatest intensity is obtained.

CAUTION—When aligning the short wave bands, be sure NOT to adjust at the image frequency. This can be checked as follows: Let us say the signal generator is set for 5000 KC. The signal will then be heard at 5000 KC on the dial of the radio. The image signal, which is much weaker, will be heard at 5000 less 912 KC, or 4088 KC on the dial. It may be necessary to increase the input signal to hear the image.

NOTICE—Re-alignment is necessary if glass tubes are replaced by their equivalent in metal tubes, or vice versa, in the R.F. and I.F. stages.

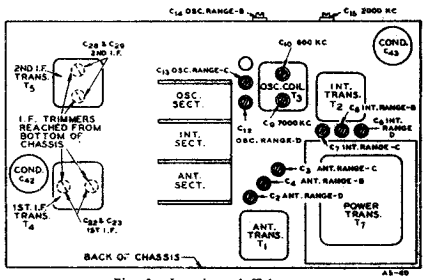

Fig. 3—Location of Trimmers

Circuit

This model is a three band AC operated radio with a tuning range as shown in the specifications above.

Referring to the schematic circuit diagram, Fig. 2, T1 and T2 are the antenna and interstage R.F. transformer assemblies and T3 is the oscillator coil assembly. The standard wave, 1st and 2nd short wave coils in each assembly are indicated by the letters B, C and D respectively.

The band switch completes connections to the coils in use. The band switch sections are designated in the schematic as section 1 and section 2.

The antenna transformer with tuned secondary feeds into a type 6K7 R.F. amplifier tube. The output of this tube is fed through the interstage R.F. transformer with tuned secondary into a 6J7 tube which functions as the 1st detector.

A separate type 6C5 tube is employed in the oscillator circuit. The oscillating circuit is always resonant at 456 KC above the frequency to which the R.F. amplifier is tuned.

One stage of I.F. amplification is employed using a 6K7 tube. The primaries and secondaries of the 1st and 2nd I.F. transformers are tuned by small trimmer condensers.

Referring to Fig. 2, it will be noted that there is a coupling winding connected in series with the secondary of I.F. transformer T4. When the selectivity control is in the sharp position, the coupling winding is open circuited and the loose coupling which exists between the primary and secondary of this transformer results in high selectivity.

When the selectivity control is in the broad position, the coupling winding which is wound under the primary is connected in series with the secondary. This provides overcoupling which results in a greatly widened resonance curve. Passage of a wide range of audio frequencies is thus obtained.

A 6H6 tube functions as a diode 2nd detector. AVC voltage is applied to the control grid circuits of the R.F. and I.F. tubes.

Across the volume control resistor R15 is a filter composed of condensers C32 and C33 and resistor R14. At high volume settings, the filter is not effective. At low volume settings, the action of this filter results in an increase of high and low frequency amplitudes relative to the other frequency amplitudes.

A 6F5 triode tube functions as the first audio amplifier while the output stage uses a 6F6 output pentode tube. A dynamic reproducer is employed.

The power unit uses a 5Y3G full wave rectifier. A 6G5 tuning indicator tube is employed.

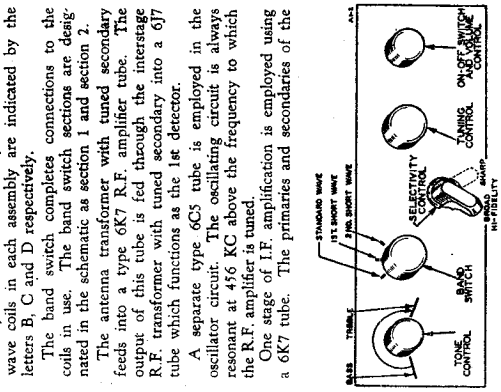

Fig. 1—Arrangement of Controls

VOLTAGES AT SOCKETS

Line Voltage: 117—Volume Control: Maximum
Readings taken with 1000 Ohm-per-volt meter
Antenna Shorted to Ground
Position of Band Switch: Standard Wave

TUBE	FUNCTION	VOLTAGE BETWEEN SOCKET PRONG AND GROUND (Unless otherwise indicated) Prong No. 1	Prong No. 2	Prong No. 3	Prong No. 4	Prong No. 5	Prong No. 6	Prong No. 7	Prong No. 8
6K7	R.F.	0	6.2(1)	245	118	2.5		6.2(1)	2.5
6J7	1st Det.	0	6.2(1)	245	114	0		6.2(1)	6.2
6C5	Osc.	0	6.2(1)	114				6.2(1)	0
6K7	I.F.	0	6.2(1)	245	118	2.5		6.2(1)	2.5
6H6	2nd Det.	0	6.2(1)		0			6.2(1)	0
6F5	1st A.F.	0	6.2(1)		155			6.2(1)	0(2)
6F6	Power	0	6.2(1)	230	245	16(3)		6.2(1)	0
5Y3G	Rectifier	0	5.0(4)		680(5)		680(5)		5.0(4)
6G5	Tuning Indicator	Plate to Ground 20		Target to Ground 245		Cathode to Ground 0			Across Heater 6.2

(1) A.C. voltage as read across heater terminals 2 and 7.
(2) Bias (1.5 volts) as read across resistor R20.
(3) Bias (16 volts) as read across resistors R20 and 21.
(4) A.C. voltage as read across filament terminals 2 and 8.
(5) A.C. voltage as read across terminals 4 and 6.

©John F. Rider, Publisher

WELLS-GARDNER & CO.

MODEL A5 Series
Socket, Coils, Data
Parts List

General Service Data

117-234 Volt Power Transformer

Some models are equipped with a 117-234 volt 40 to 60 cycle power transformer. Connections as shown in Fig. 2 are completed to a special octal socket mounted on the back panel of the chassis. A plug which goes with this socket may then be inserted for either the 117 volt or 234 volt connection.

If one of these transformers is to be installed in a chassis equipped with a regular transformer, there is a 1⅛ inch round knockout on the back panel

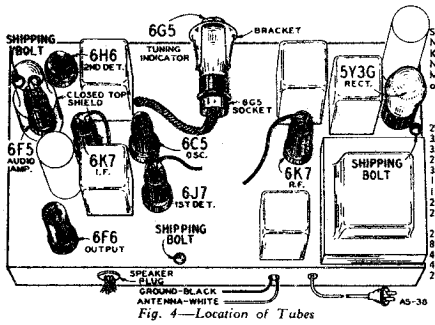

Fig. 4—Location of Tubes

which may be removed to permit installation of the octal socket mentioned above.

Twenty-Five Cycle Models

The twenty-five cycle receiver differs from the sixty cycle receiver only in the fact that a different power transformer is used.

The twenty-five cycle receiver can be operated satisfactorily from a sixty cycle power supply. However, the reverse is not true—the sixty cycle receiver cannot be operated from a twenty-five cycle power supply.

Dial and Drive Assembly

Complete information regarding the dial and drive assemblies will be found in the Dial and Drive Service **Notes** issued for this chassis. (**see index**)

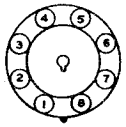

Fig. 5—Octal Tube Terminal Numbering (bottom of socket).

Phonograph Connections

Phonograph connections are made as shown in the schematic circuit diagram Fig. 2. On the front panel of the chassis base is a round knockout 1⅛ inches in diameter. An octal base socket is mounted in this knockout opening and wired as shown in the schematic.

A phono cable assembly may then be purchased (see parts list). On one end of this cable is an octal plug and on the other end is a phonograph-radio switch and double tip jack.

Some models are shipped from the factory equipped with the phono socket. A jumper is inserted in this socket which must be removed if the phonograph installation is made—See Fig. 2.

Series A5 - Replacement Parts

MISCELLANEOUS

SOCKETS

Part No.	Description	List Price
3A263	Tube Socket—Octal (8 prong)	$0.15
3A256	Tube Socket—Octal (7 prong)	.15
3A261	Tube Socket—Octal (5 prong)	.10
3A262	Speaker Socket (6 prong)	.15
3A266	Phono Socket—Octal (4 prong)	.10
13X295	Tuning Eye Tube Socket and Cable Assembly	.55
3A257	Dual Keyway Socket—Octal (8 prong)—Universal Power Transformer Connections	.15
6A214	Plug (4 prong)—Used with above Socket	.25

SPEAKERS

12A285	8" Dynamic Speaker Complete with Output Transformer (T6)	5.65
	Cone and Voice Coil for above Speaker	2.75
	Output Transformer only	2.45
12A290	10" Dynamic Speaker Complete with Output Transformer (T6)	6.65
	Cone and Voice Coil for above Speaker	3.50
	Output Transformer only	2.45

KNOBS

Specify Name of Knob & Name & Model of Radio

	Volume Control Knob	.15
	Tone Control Knob	.15
	Tuning Control Knob	.15
	Band Switch Knob	.20
	Selectivity Control Knob	.25

GENERAL

25X378	Clamp Bracket for Tuning Eye Tube	.10
32X50	Tube Shield (Closed Top)	.15
32X51	Tube Shield Base	.10
2X38	Felt Washer (Used behind knobs)	Doz. .10
30X44	Grid Clip	Doz. .10
13X214	Antenna and Ground Lead Assembly	.30
13X80	Line Cord and Plug Assembly	.50
2A95	Band Change Switch	1.65
2A96	Dial Lamp Switch—Used with above Switch on Phantom Light Dial only	.30
2A78	Selectivity Switch	.40
8X23	Rubber Cushions (Chassis mounting)	.10
3A68	Terminal Strip (3 lugs insulated)	.10
4A52	Terminal Strip (2 end lugs, mounting hole in center)	.10
25X375	Chassis Mounting Foot	.10

TRANSFORMERS AND COILS

Part No.	Code	Description	List Price
9A876	T1	Antenna Transformer and Can Assembly	$2.15
9A877	T2	R. F. Interstage Transformer and Can Assembly	2.30
9A878	T3	Oscillator Coil and Can Assembly	3.60
9A879	T4	1st I. F. Transformer and Can Assembly	2.40
9A880	T5	2nd I. F. Transformer and Can Assembly	2.30
	T6	Output Transformer Only (See "Speakers")	
53X159	T7	117 Volt, 60 Cycle Power Transformer	3.60
53X160	T7	117 Volt, 25 Cycle Power Transformer	6.20
53X161	T7	117-234 Volt, 60 Cycle Universal Power Transformer	6.00

CONDENSERS

TUBULAR

Part No.	Code	Capacitance	Voltage	List Price
46X80	C5	.05 mf.	180	$0.15
46X187	C18	.02 mf.	180	.15
46X105	C19	.10 mf.	360	.20
46X121	C20	.25 mf.	360	.30
46X117	C25	.25 mf.	180	.25
46X121	C26	.25 mf.	360	.30
46X197	C32	.25 mf.	180	.25
*46X98	C34	.10 mf.	180	.20
46X147	C35	.005 mf.	360	.15
46X202	C37	.02 mf.	360	.15
46X98	C38	.10 mf.	180	.20
46X98	C39	.10 mf.	180	.20
46X108	C40	.05 mf.	600	.20
46X100	C41	.002 mf.	600	.15
46X181	C44	.10 mf.	240	.15

ELECTROLYTIC

44X11	C42	18 mf.	290	Wet	1.10
44X10	C43	14 mf.	400	Wet	1.25

MOLDED

47X69	C1	250	mmf.	.15
47X66	C31	50	mmf.	.10
47X57	C33	100	mmf.	.10
47X65	C36	250	mmf.	.15

TRIMMER

Part No.	Code	Capacitance	Voltage	List Price
17A73	C2, C3, C4	2-25 mmf.	Range "D" Antenna, "C" Antenna, "B" Antenna	$0.35
17A73	C6, C7, C8	2-25 mmf.	Range "D" Interstage, "C" Interstage, "B" Interstage	.35
17A69	C9, C10	40-100 mmf. 7000 KC; 60-100 mmf. 600 KC		.40
17A76	C12, C13	2-25 mmf.	Range "D" Oscillator, "C" Oscillator	.25
17A68	C14	1-12 mmf.	Range "B" Oscillator	.20
17A75	C15	1300-1700 mmf.	2000 KC	.50
17A70	C22, C23	15-55 mmf.	1st I. F. Trimmers	.40
17A70	C28, C29	15-55 mmf.	2nd I. F. Trimmers	.40

MISCELLANEOUS

47X89	C11	270	mmf. Iron Clad	.30
*47X80	C16	13	mmf. Compensating Capacitor	.50
47X81	C17	35	mmf. Iron Clad	.25
47X91	C21	65	mmf. Iron Clad	.25
47X91	C24	65	mmf. Iron Clad	.25
47X91	C27	65	mmf. Iron Clad	.25
47X83	C30	150	mmf. Iron Clad	.35
14A70	3 Section Gang Condenser (Less Dial and Drive Assembly)			4.55

* Used on Telephone Dial models only—See Fig. 2.

RESISTORS

CARBON

Part No.	Code	Resistance	Wattage	List Price
A94503	R1	50,000 Ohm	0.2	$0.15
A94502	R2	5,000 Ohm	0.2	.15
C94253	R3	25,000 Ohm	1.0	.15
A94505	R4	8 Megohm	0.2	.15
A94505	R5	8 Megohm	0.2	.15
A95105	R6	1 Megohm	0.2	.10
A94151	R7	150 Ohm	0.2	$0.15
C94153	R8	15,000 Ohm	1.0	.15
D94163	R9	16,000 Ohm	2.0	.30
A95503	R10	50,000 Ohm	0.2	.10
*A95104	R11	10 Megohm	0.2	.10
A95503	R12	50,000 Ohm	0.2	.10
A95205	R13	2 Megohm	0.2	.10
A94202	R14	2,000 Ohm	0.2	.15
A95205	R16	2 Megohm	0.2	.10
A95154	R17	150,000 Ohm	0.2	.10
A95254	R18	250,000 Ohm	0.2	.10
A95504	R19	500,000 Ohm	0.2	.10
A95503	R22	50,000 Ohm	0.2	.10
B94803	R24	80,000 Ohm	0.5	.15

WIRE WOUND

43X83	R20	.25 Ohm	.25	.30
	R21	210 Ohm	2.0	

VARIABLE

36X236	R15	500,000 Ohm	Volume Control and On-Off Switch	1.00
40X223	R23	.15 Megohm	Tone Control	.65

* Used on Telephone Dial models only—See Fig. 2.

PHONO ATTACHMENT PARTS

Part No.	Description	List Price
13X298	30" Phono Cable Assembly Complete (Includes Plug, Double-tip Phono Jack, Switch and Knob)	$2.55
3A266	Phono Socket—Octal (4 Prong)—Must be ordered for Chassis not equipped with this socket	.10
6A218	Plug (8 Prong) Only of Phono Cable	.15
3A12	Phono Jack Only of Phono Cable	.10
2A50	Phono Switch Only of Phono Cable	.70
10A90	Knob Only of Phono Cable	.20

DIAL AND DRIVE ASSEMBLY

DIAL AND DRIVE PARTS WILL BE FOUND IN SPECIAL DIAL AND DRIVE **Notes** (see index)

Prices Subject to Change Without Notice.

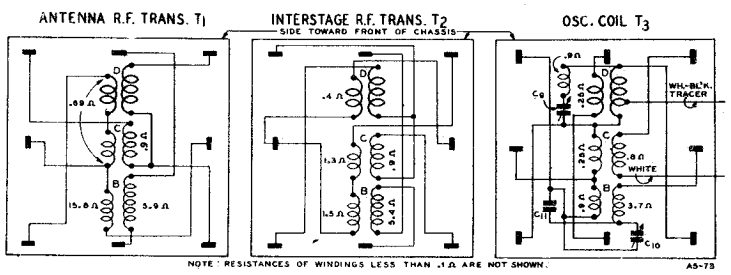

Fig. 6—Coil Terminal Arrangement and D.C. Resistance of Windings

©John F. Rider, Publisher

©John F. Rider, Publisher

Series C6 Replacement Parts

The following parts list covers two types of the Series C6 auto radio.

Type "A" has a rectangular dial scale with a sliding pointer.

Type "B" has a circular dial scale with a rotating pointer disc.

All parts shown are common to both types of radios except in the case of part numbers with the letter "A" or "B" in front of them.

Part numbers with a letter in front of them are used only on the type radio indicated by the letter.

NOTICE—There is a chassis number label on the inside of the bottom chassis cover. This chassis number identifies the radio as to chassis, dial, and issue number. When ordering parts or writing, be sure to mention the chassis number.

Manufacturer — Wells-Gardner & Co., 2701 N. Kildare Avenue, Chicago, Illinois, U. S. A.

MISCELLANEOUS

SOCKETS

Part No.	Description	List Price
3A263	Tube Socket—Octal (8 prong)	$0.15
3A271	Tube Socket—Octal (7 prong)	.10
3A267	Vibrator Socket (7 prong)	.15
3A274	Tube Socket—Octal (5 prong)	.10

SPEAKER

When ordering parts for speakers, specify part number of speaker and letters preceding part number stamped on the speaker.

Part No.	Description	List Price
12A309	6" Dynamic Speaker complete with Output Transformer (T5)	$3.20
	Cone and Voice Coil Assembly for above Speaker	1.40
	Output Transformer only (T5)	.25
(B) 14X226	Speaker Housing only	1.30
(A) 14X227	Speaker Housing only (Tan color)	1.30
(A) 14X229	Speaker Housing only (Brown color)	1.30
14X213	Grille Cloth	.10
14X204	Wire Screen	.15
13X331	Speaker Cable only	.40

GENERAL

19A32	Vibrator Unit	3.50
28X186	Spring Clamp for Vibrator	.10
(B) 34X256	Chassis Case only only	1.25
(B) 34X257	Chassis Case Cover only	.45
(B) 34X258	Front Case Cover only (less Dial Scale and Retaining Plate)	.40
(B) 34X264	Chassis Case Back—Issue No. 2	.30
(A) 34X261	Chassis Case only (Tan color)	1.20
(A) 34X266	Chassis Case only (Brown color)	1.20
(A) 34X262	Chassis Case Cover only (Tan color)	.45
(A) 34X254	Chassis Case Cover only (Brown color)	.45
(A) 34X260	Front Case Cover only (Less Celluloid Crystal and Retaining Spring)—Tan color	.40
(A) 34X267	Front Case Cover only (Less Celluloid Crystal and Retaining Spring)—Brown color	.40
(A) 34X263	Chassis Case Back (Brown color)—Issue No. 2	.30
32X30	Tube Shield Base	.10
32X26	Tube Shield	.10
30X44	Grid Clip only Doz.	.10
(B) 10A151	Tone or Tuning Control Knob	.10
(A) 10A150	Tone or Tuning Control Knob	.10
4A30	Terminal Strip (Single Lug Insulated—Mtg. Lug Ext.)	.10
4A38	Terminal Strip (Single Lug Insulated—One Mtg. Foot)	.10
4A76	Terminal Strip for Antenna Connection (Marked HC and LC)	$0.10
4A77	Terminal Strip (3 Lugs Insulated—One Mtg. Foot)	.10
32X106	Shield for Power Transformer and Filter Assembly	.35

TRANSFORMERS AND COILS

Part No.	Code	Description	List Price
(B) 9A940	T1	Antenna Transformer and Can Assembly	$1.20
(A) 9A982	T1	Antenna Transformer and Can Assembly	1.20
9A941	T2	Oscillator Coil Assembly	.60
9A942	T3	1st I.F. Transformer Assembly	1.20
9A943	T4	2nd I.F. Transformer Assembly	1.00
42X102		1st and 2nd I.F. Can Assembly (Issue No. 1 Type using Spring Mounting Lugs)	.30
42X105		1st and 2nd I.F. Can Assembly (Issue No. 2 Type using Threaded Mounting Lugs)	.30
	T5	Output Transformer (See "Speaker").	
53X178	T6	Power Transformer	1.20

Prices Subject to Change Without Notice.

Part No.	Description	List Price
9A946	L1 Antenna Motor Noise Reactor	.20
9A945	L3 "A" Line Motor Noise Reactor	.20
9A960	L4 "B" Reactor (Issue No. 2)	.20
9A944	L5 Vibrator Reactor	.25
9A959	L6 "A" Line Reactor	.15

CONDENSERS

TUBULAR

Part No.	Code	Capacitance	Voltage	List Price
46X80	C3	.05 mf.	180	$0.15
46X117	C6	.25 mf.	180	.25
46X211	C9	.04 mf.	180	.10
46X211	C12	.04 mf.	180	.10
46X124	C18	.01 mf.	180	.15
46X228	C22	.018 mf.	1200	.35
46X229	C23	.10 mf.	300	.15
46X226	C25	.25 mf.	180	.20
46X226	C26	.25 mf.	180	.20
46X124	C28	.01 mf.	180	.15
46X147	C30	.005 mf.	360	.15

ELECTROLYTIC

45X239	C17	10 mf.	25 Dry	.30
45X236	C29A C29B C29C	4 mf. 21 mf. 14 mf.	25 200 Dry 250	1.20

MOLDED

47X63	C1	10 mmf.		.15
47X44	C8	35 mmf.		.10
47X57	C15	100 mmf.		.10
47X57	C16	100 mmf.		.10
47X41	C20	2000 mmf.	(Issue No. 1 only)	.20
47X65	C21	250 mmf.		.15
47X65	C27	250 mmf.		.15

TRIMMER

Part of Gang Condenser	C2 C5	Antenna Trimmer Oscillator Trimmer		
17A57	C10 C11 C13	50-120 mmf. 50-120 mmf. 50-120 mmf.	1st I.F.	.35
17A80	C14	65-185 mmf.	2nd I.F.	.30

MISCELLANEOUS

47X101	C4	13 mmf. Compensating Capacitor	.35
47X96	C7	200 mmf. Iron Clad	.10
47X96	C19	200 mmf. Iron Clad	.10
47X96	C24	200 mmf. Iron Clad	.10
(B) 14A90		2 Section Gang Condenser only—Less Push Button Tuning and Dial Assemblies	2.30
(A) 14A89		2 Section Gang Condenser only—Less Push Button Tuning and Dial Assemblies	2.35

RESISTORS

CARBON

Part No.	Code	Resistance	Wattage	List Price
A84101	R1	100 Ohm	0.2	$0.15
A85503	R2	50,000 Ohm	0.2	.10
A85403	R3	40,000 Ohm	0.2	.10
A85203	R4	30,000 Ohm	0.2	.10
A85803	R5	50,000 Ohm	0.2	.10
A85206	R6	2 Megohm	0.2	.10
A85504	R7	500,000 Ohm	0.2	.10
A85103	R8	10,000 Ohm	0.2	.10
A95502	R9	5,000 Ohm	0.2	.10
A85504	R11	500,000 Ohm	0.2	.10
A84671	R12	470 Ohm	0.2	.15
A85105	R13	1 Megohm	0.2	.10
C94801	R14	800 Ohm	1.0	.15
A85201	R15	200 Ohm	0.2 (Issue No. 1 only)	.10

VARIABLE

(B) 36X248	R10	2 Megohm	Volume Control and On-Off Switch	.75
(A) 36X247	R10	2 Megohm	Volume Control and On-Off Switch	.75

MISCELLANEOUS ITEMS

16X26	1	9 Ampere Fuse	.10
21A6	1	Distributor Suppressor	.35
48X27	1	Generator Condenser	.45
21A5	1	Choke-Condenser Unit (Not shipped with radio)	1.50
21A7		Spark Plug Suppressor (Not shipped with radio)	.35

PUSH BUTTON TUNING AND DIAL AND DRIVE ASSEMBLY

(TYPE "B" RADIO)

Part No.		Description	List Price
20A40		Push Button Tuning Assembly Complete with Large Drive Pulley, Idler Pulley Bracket and 2 Idler Pulleys less Push Buttons, Dial Assembly, and Locking Knob	$3.00
10A148		Locking Knob only	.10
37X123		Rod for Turning Above Knob Doz.	.10
19X127		Flat Washer (2 used behind Locking Knob) Doz.	.10
25A268		Connecting Arm and Counter-Weight Assembly	.15
28X187		Tension Spring for Above Assembly Doz.	.20
28X68		Tension Spring for Drive Cord Doz.	.20
		30" Drive Cord Ea.	.05
25A300		Pointer Disc and Pulley Assembly	.45
28X129		Hairpin Spring used on Pointer Disc and Pulley Shaft Doz.	.10
26X287		Shaft for Tuning Knob	.10
19X67		Horseshoe Washer used on above Shaft Doz.	.10
7A57		Dial Lamp Socket	.10
		No. 51 Dial Lamp	.20
Specify Name and Chassis No. of Radio		Celluloid Dial Scale	.20
10A155		Push Button only Ea.	.10
26A101		1 Call Letter Sheet and 6 Celluloid Tabs	.10

(TYPE "A" RADIO)

Part No.	Description	List Price
20A41	Push Button Tuning Assembly with Connecting Arm less Push Buttons, Locking Knob and Dial Assembly	$2.90
10A148	Locking Knob only	.10
37X123	Rod For Turning Above Knob Doz.	.10
19X127	Flat Washer (2 used behind Locking Knob) Doz.	.10
25A273	Dial Bracket Assembly Complete with 4 Idler Pulleys and Studs	.65
26A102	Drive Drum and Counter-Weight Assembly	.20
20X250	Spring Clamp to hold Drive Drum to Gang Condenser Shaft Doz.	.20
28X187	Tension Spring for above Assembly Doz.	.20
28X174	Tension Spring for Drive Cord Doz.	.25
	30" Drive Cord Ea.	.05
26X290	Shaft For Tuning Knob	.15
19X67	Horseshoe Washer (used on Above Shaft) Doz.	.10
58X301	Celluloid Dial Scale	.15
41X28	Celluloid Light Diffuser (Mounted at front of Push Button Tuning Assembly)	.05
17X29	Celluloid Crystal	.15
15X125	Pointer for Dial	.10
28X193	Retaining Spring for Above Crystal Doz.	.60
7A57	Dial Lamp Socket	.10
	No. 51 Dial Lamp	.20
10A144	Push Button Only	.10
10A160	Push Button Guards (Bakelite)	.10
26A101	1 Call Letter Sheet and 6 Celluloid Tabs	.10

INSTALLATION ITEMS

CABLES

Part No.	Quantity	Description	List Price
13X332	1	60" Antenna Cable and Plug	$0.75
13X330	1	Battery Cable (Long Section with Fuse Receptacle)	.20
13X329	1	"A" Cable—Short Section Connected to Chassis (Part of Chassis Assembly)	.10

SPEAKER AND CHASSIS MOUNTING PARTS

20X59	1	Double End Hex Bolt for Mounting Speaker to Fire Wall	.10
	1	5/16"—18 Hex Nut for above Mounting Bolt Doz.	.25
	1	5/16" Spring Locknut for above Mounting Bolt Doz.	.10
19X18	1	Flat Washer for above Bolt Doz.	.15
2X282	1	Wood Spacer for Speaker (3" sq. X 1 3/16" thick)	.10
2X284	1	Wood Spacer for Speaker (3" sq. X 1½" thick)	.10
25X516	1	Mounting Strap for Chassis	.10
(A) 25X524	1	Front Stud Mounting Bracket (Used temporarily on some early models—part of chassis case on late models.)	.55
20X265	2	¼"—20 X ½" Square Head Bolts (Used to Mount Chassis to Instrument Panel) Doz.	.15
	3	¼"—20 X 13/16" Wing Nuts (Used on above Bolts on No. 2 Issue radios and on front mounting studs on No. 1 Issue radios—Also to hold mounting strap to chassis) Doz.	.20
	3	¼" Split Lockwashers (Used with above Wing Nuts) Doz.	.05
	1	¼"—20 X 1" Flat Head Bolt (Used to hold Mounting Strap to Fire Wall or Cowl) Doz.	.10
	1	¼"—20 Hex Nut (Used on above Flat Head Bolt) Doz.	.05
19X42	1	Flat Washer (Used on above Flat Head Bolt) Doz.	.05

Issue Number

The last number of the number on the chassis number label identifies the radio as to the issue number. In this model, this label will be found on the inside of the bottom chassis cover.

Issue No. 1

Mechanical Assembly—The 2 front mounting studs are attached to the top of the chassis case.

The I.F. coil cans have a spring clip by means of which they are secured to the chassis.

The back of the chassis case is not removable.

Electrical Assembly—See electrical changes under "Issue No. 2."

Issue No. 2

Mechanical Changes—The chassis case is supplied with a front mounting bracket and this bracket is secured to the instrument panel of the car by means of 2 separate bolts.

The I.F. cans use a threaded spade lug which extends through the chassis base and is secured in place with nuts and lock washers.

The back of the chassis case can be removed.

Electrical Changes—The following changes are all illustrated in the schematic—Fig. 1.

The 6H6 tube plate No. 1, which was connected originally to ground is removed from ground and connected as shown in the schematic.

Condenser C20 is removed.

The position of condenser C21 is changed as shown.

Resistor R15 (200 ohms) is removed and replaced by choke I.A.

Two Models of C6 Radio

There are 2 models of Series C6 auto radio.

One model has a rectangular dial scale with a sliding pointer.

The other model has a circular dial scale with a rotating pointer disc.

The 2 models also differ in the capacities of the antennas which may be used. The values are shown in article "Antenna Capacity."

WELLS-GARDNER & CO.

MODEL C6 Series
Schematic, Coils
Specifications

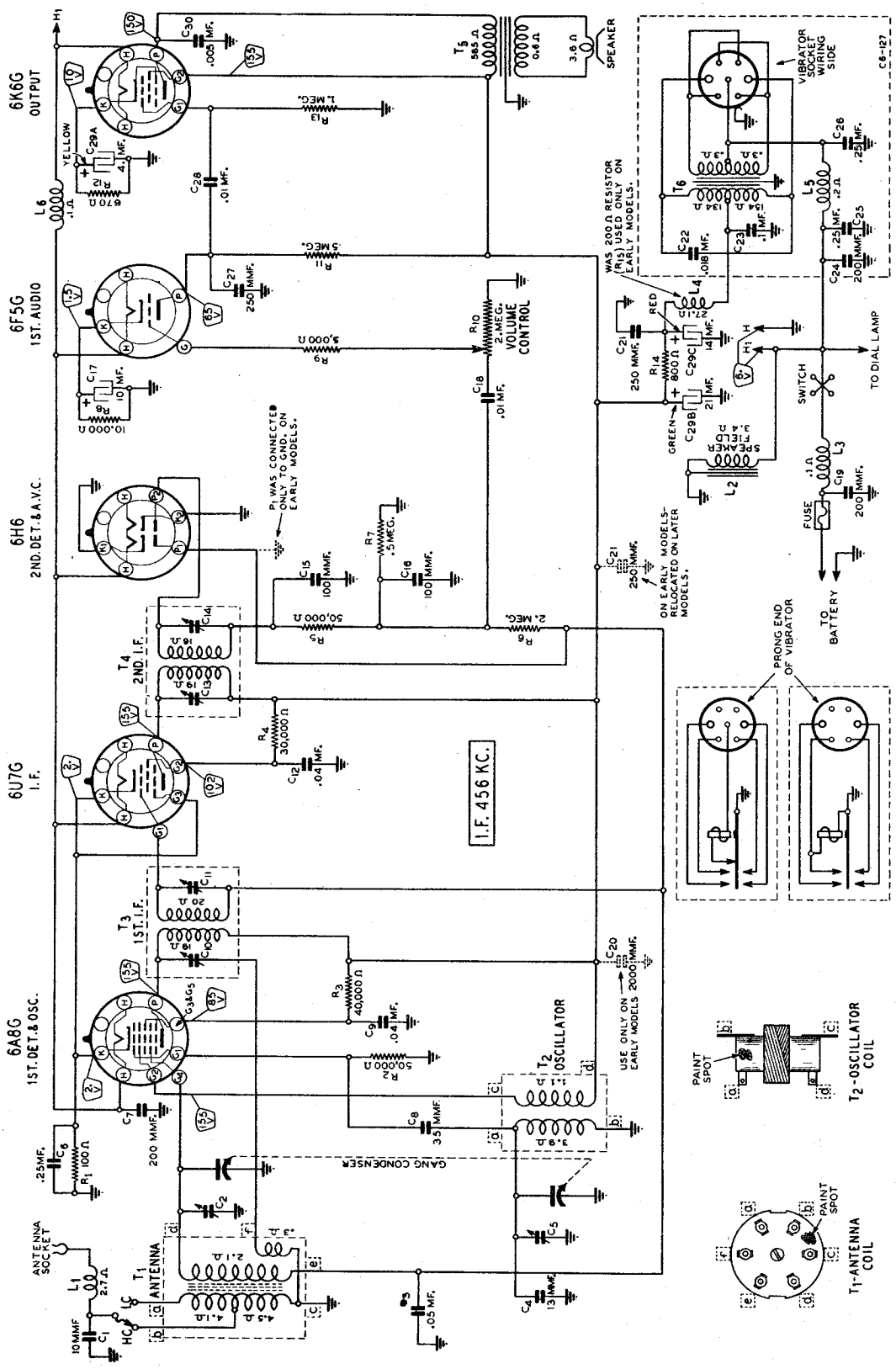

Fig. 1—Schematic Circuit Diagram

Power Consumption - - -	5.5 Amperes at 6.3 Volts
Power Output - - - - - -	.8 Watt Undistorted
Sensitivity - - -	10 Microvolts at .5 Watt Output
Selectivity - - -	42.5 KC Broad at 1000 Times Signal
Tuning Frequency Range - - -	528 to 1550 KC
Intermediate Frequency - - - - - -	456 KC
Speaker - - - - - - - - - -	6" Dynamic

APRIL, 1938

©John F. Rider, Publisher

MODEL C6 Series
Socket, Circuit Data
Drive Cord Data
Alignment

WELLS-GARDNER & CO.

SERIES C6

5 TUBE AUTO RADIO

Circuit

This model is a 5 tube automobile radio with a tuning range as shown in the specifications above. The signal is fed through an antenna transformer with tuned secondary into a 6A8G tube which functions as the 1st detector and oscillator. The end connection and tap connection on the primary of the antenna transformer permit the use of a high or low capacity car antenna.

The oscillating circuit is always resonant at 456 KC above the frequency to which the antenna circuit is tuned.

Resistance coupling is used between the 1st audio stage and the output stage, which employs a type 6K6G pentode output tube. A dynamic reproducer is used.

One stage of I.F. amplification is employed using a 6U7G tube.

A type 6H6 tube functions as the 2nd detector and AVC tube. AVC voltage is applied to the control grid circuits of the 1st detector and I.F. tubes.

A 6F5G tube is used in the first audio stage.

A synchronous type vibrator is used in the power unit. This vibrator interrupts the current through the primary of the power transformer and also rectifies the current in the secondary circuit.

Polarit · in inserting the vibrator must be observed. It can be inserted in two ways, and the correct method depends on which terminal of the car storage battery is grounded.

Fig. 4—Location of Tubes

Calibration—Sliding Pointer Models—The pointer assembly is clamped to the drive cord and it is seldom necessary to reset it to obtain proper dial calibration. If re-calibration is required, loosen the clamps with a screw driver, bringing the pointer assembly first down to one end of the dial scale and then down to the other end. Tune in a signal of known frequency near one end of the dial scale. Move the pointer assembly to this frequency on the scale and tighten the clamps with long nose pliers.

Inserting Vibrator Unit

IMPORTANT—The vibrator unit can be inserted in two ways. The proper method of insertion will depend on which terminal of the car battery is grounded. If the POSITIVE (+) terminal of the car battery is grounded, line up the + mark on the top of the vibrator with the arrow on the chassis base. If the NEGATIVE (−) terminal of the car battery is grounded, line up the − mark on the top of the vibrator with the arrow on the chassis base.

Antenna Capacity

Rotating Pointer Models—The antenna coil is designed for car antennas with a capacity of 190 mmf. for the HC connection and 60 mmf. for the LC connection. This capacity is the total capacity of the antenna and the shielded lead.

Complete information regarding car antenna installation will be found in the instruction book packed with the radio.

Sliding Pointer Models—The information for this type of radio is the same as above except that the HC capacity is 300 mmf. and the LC capacity is 38 mmf.

bracket. Tune in a signal of known frequency near one end of the dial scale. Move the pointer assembly to this frequency on the dial scale and tighten the clamps with long nose pliers.

Alignment Procedure

Remove the bottom and front chassis covers. Directions for removing the bottom cover are in the instruction book.

To remove the front cover, first pull the knobs and buttons off the shafts. Remove the 2 screws at the top and the 2 screws at the sides of the front cover. Press in the sides of the chassis case to release the lugs at the sides of the front cover. Pull outward on the bottom of the front cover and then push the cover up until the lugs at the top are released.

Do not remove the back of the chassis case. This back can be taken off of the No. 2 and later issue sets.

Set the signal generator for 456 KC and connect the output of the signal generator through a .05 mf. condenser to the control grid of the 1st Detector. Connect the ground lead of the signal generator to the chassis. Set the volume control at maximum. Attenuate the signal from the signal generator to prevent the leveling off action of the AVC.

Then adjust the 4 I.F. trimmers until maximum output is obtained. These trimmers can be reached through the 4 holes in the back wall of the chassis case. It will be necessary to pull out the fiber insulating sheet a slight amount.

Insert the antenna cable plug in the antenna socket on the chassis.

Rotating Pointer Models—If the antenna is connected at the HC terminal and the entire 60-inch shielded cable (70 mmf.) is being used, connect the antenna wire at the other end through a 120 mmf. condenser to the antenna post of the signal generator.

If the antenna is connected at the LC terminal, the antenna cable has been cut as explained in the instructions. If cut in half (30-inch length), the capacity of the antenna cable is approximately 35 mmf. Connect the antenna wire, in this case, through a 25 mmf. condenser to the antenna post of the signal generator.

Sliding Pointer Models—If the antenna is connected at the HC terminal and the 60-inch shielded cable (70 mmf.) is being used, connect the antenna wire at the other end through a 230 mmf. condenser to the antenna post of the signal generator.

If the antenna is connected at the LC terminal and the short shielded cable (19 mmf.) is being used, connect the antenna wire, in this case, through a 20 mmf. condenser to the antenna post of the signal generator. If the long cable has been cut to length and is being used, the total capacity of the cable and the series condenser should be 38 to 40 mmf.

Both Models—Set the signal generator for 1550 KC. Turn the rotor of the tuning condenser to the full open position. Adjust the trimmer of the oscillator section of the gang condenser until maximum output is obtained. See Fig. 4 for location of this trimmer.

Set the signal generator for 1400 KC. Turn the rotor of the tuning condenser carefully until maximum output is obtained. Adjust the trimmer of the antenna section of the gang condenser for maximum output.

Calibration—Rotating Pointer Models—To obtain dial scale calibration, tune in an 800 KC signal. Hold the tuning shaft and turn the pointer disc until the pointer is at the correct position when the chassis front cover is put back in place.

Fig. 2—Replacing Drive Cord—Rotating Pointer Models

Drive Cord Replacement—Rotating Pointer Models

It is not necessary to remove the dial and drive bracket assembly in order to replace the drive cord.

Tie a knot with a small loop at one end of the new drive cord. The free end of the drive cord is tied to the tension spring. The distance between knots should be 23⅜ inches.

Turn the gang condenser to full open position.

Place the looped end of the drive cord over the hook on condenser drive drum A—See Fig. 2 (Shown with gang condenser half open). Bring the cord up through the slot in the drum rim and wind one-half turn to the rear (from front of chassis) around the drive drum. Pass cord around the pulley B as shown. Wind one turn clockwise (from front of chassis) around pointer disc pulley C. Loop cord through the notches on the outside rim of the pointer disc pulley as shown. Wind 2¼ turns clockwise, progressing from a point midway between the two bracket arms toward the chassis. Bring cord under pulley D and around pulleys E and F as shown. See that the fabric tubing is now between pulleys E and F. Bring the drive cord to the rear around drive drum A and through the slot in the drum rim as shown.

Turn the gang condenser to full open position and place the free end of the tension spring over the hook on drive drum A.

Dial Pointer Adjustment—Mount the celluloid dial scale on the dial and drive bracket assembly in order to replace the drive cord.

Tie a knot with a small loop at one end of the new drive cord. Slide a ½ inch length of fabric tubing on the cord. Tie the free end of the drive cord to the tension spring. The distance between knots should be 23⅜ inches.

Turn the gang condenser to full open position.

Place the looped end of the drive cord over the hook on condenser drive drum A—See Fig. 3. Bring the cord up through the slot in the drum rim.

Turn the drive drum to the position shown in Fig. 3.

Wind one turn down and around drive drum A and around pulley B as shown. Wind 3½ turns on tuning control shaft C, progressing from a point midway between the bracket arms toward the chassis. Bring cord under pulley D and around pulleys E and F as shown. See that the fabric tubing is now between pulleys E and F. Bring the drive cord to the rear around drive drum A and through the slot in the drum rim as shown.

Turn the gang condenser to full open position and place the free end of the tension spring over the hook on drive drum A.

If the antenna is connected at the LC terminal, the antenna cable has been cut as explained in the instruc-

Fig. 3—Replacing Drive Cord—Sliding Pointer Models

Setting Pointer Disc—Tune in an 800 KC signal. Hold the tuning shaft and turn the pointer disc until the pointer is at the correct position when the chassis front cover is put back in place.

Drive Cord Replacement—Sliding Pointer Models

Remove the celluloid dial scale. Open the clamps on the back of the dial pointer in order to remove the old drive cord.

©John F. Rider, Publisher

WELLS-GARDNER & CO.

MODEL 6J Series
Schematic, Notes
Speaker Connections

Series 6J

Roof Speaker and Dual Speaker Connections

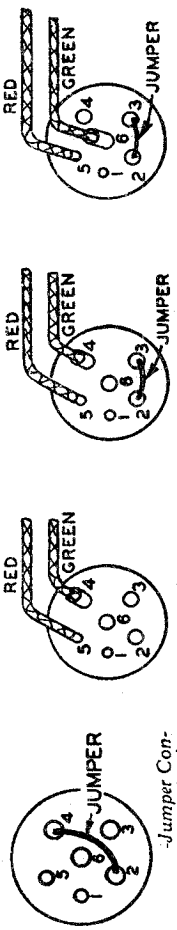

Jumper Connection for Chassis Speaker only

Single 5¼ Inch Roof Speaker

In. Roof & 6 In. Chassis Speakers

Dual 8 Inch Chassis Speakers.

Roof and 6 Inch Chassis Speakers.

Calibrating the Radio

To calibrate the radio, tune in a station of known frequency. At the back of the control head is the calibration screw—see Fig. 10. Remove the pilot lamp assembly. Insert a fine blade screwdriver and turn this screw until the pointer on the dial scale is at the frequency of the station being received. The knob must be held during this adjustment.

If the control head is inaccessible it may be calibrated by setting the pointer from the front. Remove the crystal by inserting a knife blade under the lower edge. Loosen the pointer screw, set the pointer and retighten.

Inserting Vibrator Unit

Note that the vibrator unit can be inserted in two ways. The proper method of insertion will depend on which side of the car battery is grounded. Complete information is shown on the label on the vibrator.

©John F. Rider, Publisher

CHANGES IN LATER MODELS

SERIES 6J June, 1937

Later models of the Series 6J have changes incorporated in them which are explained below. The models which have these changes may be identified by the issue letter which is a large letter stamped on top of the chassis base. The tube arrangement label on the chassis case cover also shows this issue letter.

When ordering parts, it is important that the issue letter be noted and the correct part number, as shown in the parts list, be specified.

The "D" issue Series 6J is different from the "B" and "C" The gang condenser used in the "D" issue radios does not have the cut plate oscillator section. A padding condenser (600 KC) was added in series with the oscillator section of this gang condenser and the oscillator coil. The padding condenser is a part of the 2nd I. F. trimmer unit and is mounted in the 2nd I. F. coil can.

The capacity (C17) shown within a dotted circle in the 2nd I.F. coil assembly on the schematic has been changed to an actual part as shown in the supplementary parts list.

The antenna, R.F. Interstage, oscillator, and 2nd I.F. coil assemblies have been changed and have been given new part numbers as shown in the supplementary parts list.

SUPPLEMENTARY REPLACEMENT PARTS

The PARTS of the Series 6J are used on the Series 6J "D" issue Radio with the following EXCEPTIONS: **PRICES ARE SUBJECT TO CHANGE WITHOUT NOTICE**

THE FOLLOWING NEW PARTS ARE USED:

No.	Code	Description	List Price
9A859	T1	Antenna Transformer and Can Assembly.....	$1.65
9A861	T2	R. F. Interstage Transformer and Can Assembly.....	1.75
9A862	T3	Oscillator Coil and Can Assembly.....	.95
9A858	T5	2nd I. F. Transformer and Can Assembly.....	2.35
47X57	C17	100 mmf. Molded Condenser.....	.10
17A79	(C16 (	30-100 mmf. 2nd I.F. Trimmer) 900-1300 mmf. Oscillator 600 KC Padder)	.45
14A77		3 Section Gang Condenser Complete with Drive Gears.....	5.05

THE FOLLOWING PARTS OF THE SERIES 6J ARE NOT USED ON THE SERIES 6J "D" ISSUE RADIO:

9A740) 9A771)	or T1	Antenna Transformer and Can Assembly.....	$1.65
9A741) 9A765)	or T2	R.F. Interstage Transformer and Can Assembly.....	1.70
9A742) 9A772)	or T3	Oscillator Coil and Can Assembly.....	.85
9A744	T5	2nd I.F. Coil and Can Assembly.....	1.60
17A65	C16	30-100 mmf. 2nd I.F. Trimmer.....	.20
14A65		3 Section Gang Condenser Complete with Drive Gears.....	5.85

The Following Changes apply to all Issues of the Series 6J:

THE FOLLOWING NEW PARTS ARE USED:

46X213	C29	.5 mf. 180 volt Tubular Condenser.....	$0.30
16X16		15 Ampere Fuse.....	.10

THE FOLLOWING PARTS ARE NOT USED:

46X207	C29	.5 mf. 180 volt Tubular Condenser.....	$0.30
16X14		20 Ampere Fuse.....	.10

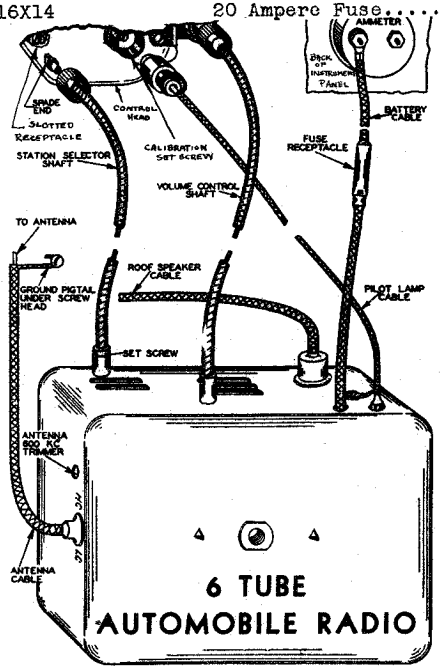

General Installation View

Alignment Procedure

Set the signal generator for 175 KC and connect the output of the signal generator through a .05 mf. condenser to the stator of the 1st detector section of the tuning condenser. Set the volume control at the maximum position and attenuate the signal from the signal generator to prevent the levelling off action of the AVC. Then adjust the three IF trimmers until maximum output is obtained

Set the signal generator for 1581 KC. Turn the rotor of the tuning condenser to the full open position. Insert the antenna plug with the mark on the high capacity (HC) side. Connect the shielded antenna lead from the chassis through a 120 mmf. condenser to the antenna post of the signal generator. Adjust the trimmer of the oscillator section of the three gang condenser until maximum output is obtained.

Set the signal generator for 1400 KC. Turn the rotor of the tuning condenser carefully until maximum output is obtained. Adjust the 1st detector and antenna 1400 KC trimmers for maximum output. Do not change the setting of the oscillator trimmer.

Then set the signal generator for 600 KC and adjust the 600 KC antenna trimmer to maximum (see Fig. 10 for location of this trimmer).

After the alignment procedure is completed, the antenna plug may be withdrawn and reinserted on the LC side if a low capacity (70 mmf.) car antenna is used.

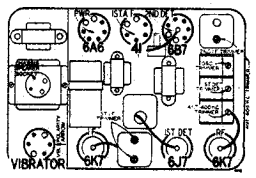

Location of Tubes and Vibrator

Adjusting Antenna 600 KC Trimmer

Tune in a weak signal at approximately 600 KC with the volume control about three-fourths on. Turn the adjusting screw of the antenna 600 KC trimmer up or down until maximum output is obtained. See Fig. 9 for location of this trimmer.

Antenna

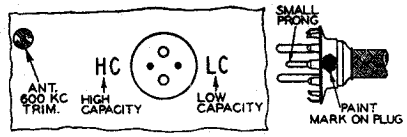

Fig. 9—Antenna Plug Insertion

IMPORTANT—The antenna plug can be inserted in two ways depending on whether the antenna is of high or low capacity.

If the total capacity ot the antenna and shielded lead is approximately 200 mmf., which would be the case in a running board or ordinary roof antenna (not metal roof), insert the antenna plug with the mark on the HC side—See Fig. 9.

If the total capacity of the antenna and shielded lead is approximately 70 mmf., such as is the case if a "fish pole" antenna is used, insert the antenna plug with the mark on the LC side.

©John F. Rider, Publisher

Specifications
Coils

WELLS-GARDNER & CO.

MODEL A12 Series
Schematic, Socket
Phono., Voltage

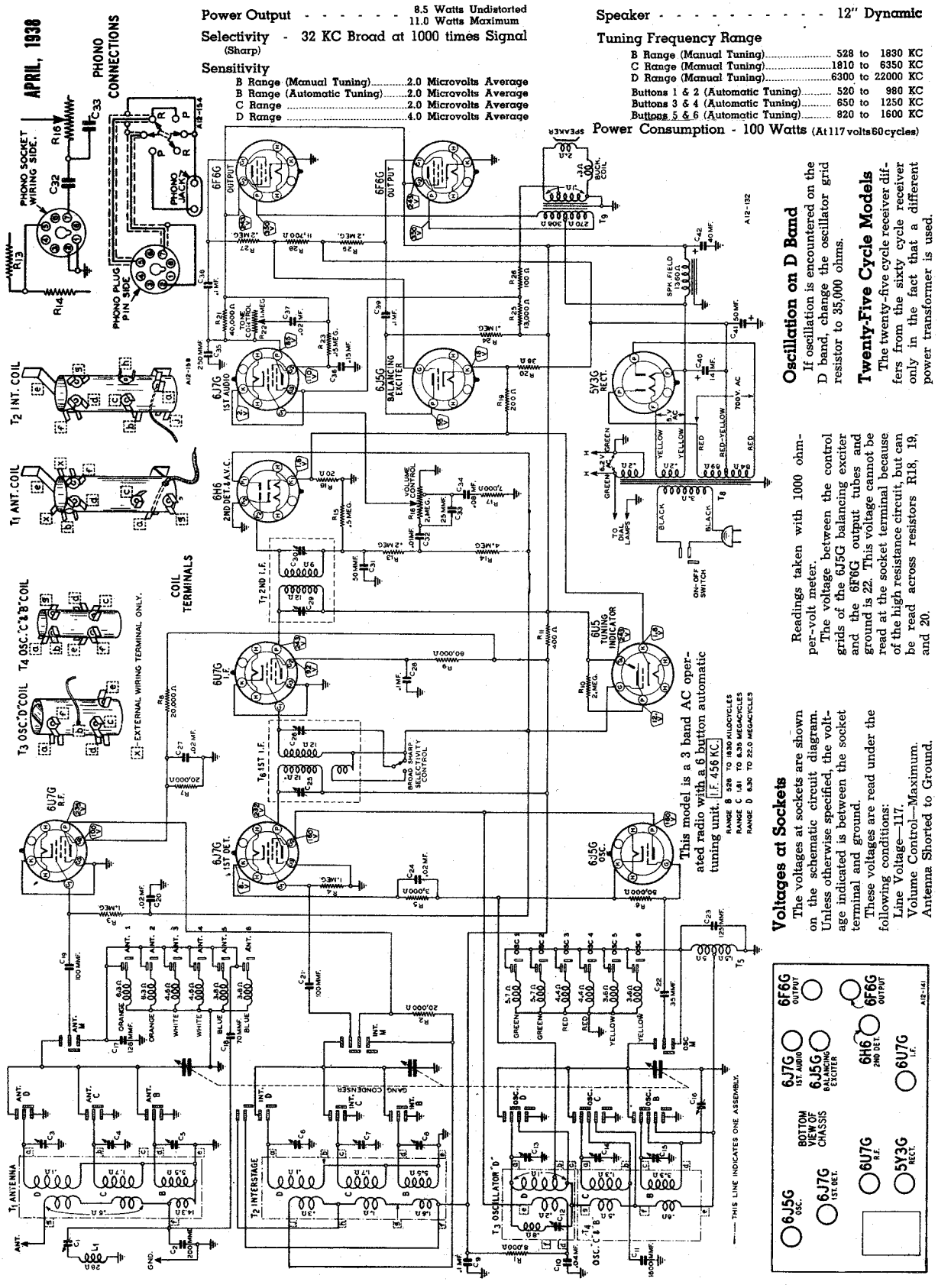

Power Output - - - - - - - 8.5 Watts Undistorted
11.0 Watts Maximum

Selectivity - 32 KC Broad at 1000 times Signal
(Sharp)

Sensitivity

B Range (Manual Tuning)	2.0 Microvolts Average
B Range (Automatic Tuning)	2.0 Microvolts Average
C Range	2.0 Microvolts Average
D Range	4.0 Microvolts Average

Speaker - - - - - - - - - - - 12" Dynamic

Tuning Frequency Range

B Range (Manual Tuning)	528	to	1830 KC
C Range (Manual Tuning)	1810	to	6350 KC
D Range (Manual Tuning)	6300	to	22000 KC
Buttons 1 & 2 (Automatic Tuning)	520	to	980 KC
Buttons 3 & 4 (Automatic Tuning)	650	to	1250 KC
Buttons 5 & 6 (Automatic Tuning)	820	to	1600 KC

Power Consumption - 100 Watts (At 117 volts 60 cycles)

This model is a 3 band AC operated radio with a 6 button automatic tuning unit. I.F. 456 KC.

RANGE B 528 TO 1830 KILOCYCLES
RANGE C 1.81 TO 6.35 MEGACYCLES
RANGE D 6.30 TO 22.0 MEGACYCLES

Voltages at Sockets

The voltages at sockets are shown on the schematic circuit diagram. Unless otherwise specified, the voltage indicated is between the socket terminal and ground.

These voltages are read under the following conditions:
Line Voltage—117.
Volume Control—Maximum.
Antenna Shorted to Ground.

Readings taken with 1000 ohm-per-volt meter.

The voltage between the control grids of the 6J5G balancing exciter and the 6F6G output tubes and ground is 22. This voltage cannot be read at the socket terminal because of the high resistance circuit, but can be read across resistors R18, 19, and 20.

Oscillation on D Band

If oscillation is encountered on the D band, change the oscillator grid resistor to 35,000 ohms.

Twenty-Five Cycle Models

The twenty-five cycle receiver differs from the sixty cycle receiver only in the fact that a different power transformer is used.

©John F. Rider, Publisher

MODEL A12 Series
Circuit Data
Alignment, Trimmers

WELLS-GARDNER & CO.

Circuit

Ten buttons are provided on the front panel. Three buttons actuate linear band switches for a broadcast and 2 short wave manual tuning ranges. Six buttons actuate switches which connect fixed tuned circuits for automatic tuning. Depressing any of the 9 band and automatic tuning buttons also turns on the radio. Depressing the 10th button will turn the radio to the off position.

The band switch has 4 arms as shown in Fig. 5, one each for the B, C, and D bands (broadcast, 1st and 2nd short wave, respectively) and one called the "Master" arm. The master arm switches from manual to automatic tuning and vice versa. This arm is actually over the other 3 arms rather than in back of them, as shown in the illustration. Depressing any of the B, C, or D band buttons actuates the arm for that band and also the master arm. The latter is in only when one of the 3 band switch buttons is depressed.

In manual tuning, an R. F. antenna transformer with tuned secondary is used before the 6U7G R.F. tube. The output of this tube is fed through another R. F. transformer with tuned secondary into the 6J7G 1st detector tube. A 6J5G tube functions as a separate oscillator. The antenna, interstage, and oscillator circuits are tuned by sections of the gang condenser.

In automatic tuning, the gang condenser is not used. A single tuned circuit is used before the R. F. tube while a stage of resistance coupling is employed between this tube and the 1st detector. The other automatic tuned circuit is the oscillator grid circuit. Tuning of the R. F. and oscillator fixed tuned circuits to the desired frequency is accomplished by varying the inductance of tuning coils by changing the permeability of the magnetic circuit. This is done by moving an iron core in and out of the coil.

The iron cores within the automatic tuning antenna and oscillator coil forms are secured to a brass rod. This rod is moved back and forth by a screw at the front of the radio.

Alignment between the oscillator and antenna automatic tuning coils is obtained by changing the antenna (rear) coil position while the iron core is held in place on the shaft.

In the schematic, the band switch and the automatic tuning switch are broken into sections each of which is given a name that is, to some extent, descriptive of its location in the circuit. Ant. D, for example, completes the antenna coil D band connections when the D range button is depressed. The location of the Ant. D connections on the band switch is shown in Fig. 5. All of the switches have only 2 positions. In the schematic, they are in the normal or button out position.

Now, to describe the connections for one manual tuning range: Let us assume that the B band button is depressed. The antenna transformer B band secondary is connected to the R. F. tube grid circuit through the Ant. B and Ant. M sections of the B band and master switch arms. The antenna transformer C and D band secondaries are short circuited.

The interstage transformer B band secondary is connected to the 1st detector tube grid circuit through the Int. B and Int. M sections of the switch arms mentioned above. The interstage transformer C band secondary is short circuited and the D band secondary is open circuited.

The oscillator B band grid coil is connected to the grid circuit of the oscillator tube through the Osc. B and Osc. M sections of the same switch arms as mentioned above. The oscillator B band cathode coil is connected to ground through the Osc. B section. The oscillator C and D band grid coils are short circuited.

The permeability tuning coils are open circuited.

In like manner, to describe the connections for one automatic tuning circuit, assume that button number 1 is depressed.

The antenna circuit is connected to the R. F. tube grid circuit through the Ant. M section of the master switch arm. The antenna circuit is also connected to the antenna No. 1 permeability coil through Ant. 1 switch. The antenna No. 1 coil is shunted by fixed condenser C17. The connections from the antenna and interstage transformer secondaries are open circuited.

The plate of the R. F. tube is connected in series with resistor R2 to the B+ line. It is also connected through coupling condenser C21 to the grid of the 1st detector. The latter is connected through grid leak R4 to ground.

The oscillator cathode circuit is connected through the tap on tracking coil T5 to ground. This tracking coil is connected through the Osc. M switch section to the control grid circuit of the oscillator tube. It is also connected to oscillator No. 1 coil through the Osc. 1 switch section. The tracking or oscillator grid coil is tuned by fixed condenser C23 and the inductance of oscillator coil No. 1.

One stage of I. F. amplification is employed using a 6U7G tube. An expander is used in the 1st I. F. transformer for high fidelity reception.

A 6H6 tube functions as a diode 2nd detector. AVC voltage is applied to the control grid circuits of the R. F. and I. F. tubes.

Across the volume control resistor R16 is a filter composed of condensers C33 and C34 and resistor R17. At high volume settings, the filter is not effective. At low volume settings, the action of this filter results in an increase of high and low frequency amplitudes relative to the other frequency amplitudes.

The output of the 2nd detector is applied to the 6J7G 1st A. F. tube. The output of this tube is fed through resistance coupling into the 6F6G output tube immediately to the right of it in the schematic.

A portion of the voltage developed across the output tube grid resistor is applied to the control grid of the 6J5G balancing exciter tube. This tube functions as a phase inverter and applies the audio voltage of proper phase and amplitude to the other 6F6G output tube. The two output tubes operate as a stage of Class A push-pull amplification. The balancing exciter tube thus replaces a push-pull input transformer. A dynamic reproducer is employed.

Degeneration or negative feedback is used in the audio amplifier. A portion of the voltage developed across the secondary of the output transformer is fed back into the cathode circuit of the 1st audio tube. The voltage fed back is of the proper phase to reduce the amplitude of certain frequencies. This results in a reduction in distortion.

The power unit uses a 5Y3G full wave rectifier. A 6U5 tuning indicator tube is employed.

ALIGNMENT PROCEDURE

Volume Control—Maximum All Adjustments.
Selectivity Control—Sharp Position All Adjustments.
Connect Radio Chassis to Ground Post of Signal Generator with a Short Heavy Lead.
Allow Chassis and Signal Generator to "Heat Up" for several minutes.

The following equipment is required for aligning:
An All Wave Signal Generator which will provide an accurately calibrated signal at the test frequencies as listed.
Output Indicating Meter—Non-Metallic Screwdriver.
Dummy Antennas—.1 mf., 200 mmf., and 400 ohms.

SIGNAL GENERATOR FREQUENCY SETTING	SIGNAL GENERATOR CONNECTION AT RADIO	DUMMY ANTENNA	BUTTON DEPRESSED	CONDENSER SETTING	ADJUST TRIMMERS TO MAXIMUM (Unless otherwise specified)
I. F.					
456 KC	Grid of I.F. Tube	.1 mf.	B Range	Turn Rotor to Full Open	2nd I.F. (C29) & (C30)
456 KC	Grid of 1st Det.	.1 mf.	B Range	Turn Rotor to Full Open	1st I.F. (C25) & (C26)
RANGE B					
1830 KC	Antenna Lead	200 mmf.	B Range	Turn Rotor to Full Open	Oscillator Range B (C15)
1500 KC	Antenna Lead	200 mmf.	B Range	Turn Rotor to Max. Output Set Indicator to 1500 KC—See Note A	Ant. Range B (C5) Int. Range B (C8)
600 KC	Antenna Lead	200 mmf.	B Range	Turn Rotor to Max. Output	600 KC (C16) Rock Rotor—See Note B
WAVE TRAP					
456 KC	Antenna Lead	200 mmf.	B Range	Turn Rotor to 600 KC Adjust Sig. Gen.—See Note C	Wave Trap (C1) Adjust for MINIMUM Output
RANGE C					
6350 KC	Antenna Lead	400 Ohm	C Range	Turn Rotor to Full Open	Oscillator Range C (C14)
6000 KC	Antenna Lead	400 Ohm	C Range	Turn Rotor to Max. Output	Antenna Range C (C4) Int. Range C (C7)
RANGE D					
22,000 KC	Antenna Lead	400 Ohm	D Range	Turn Rotor to Full Open	Oscillator Range D (C13)
20,000 KC	Antenna Lead	400 Ohm	D Range	Turn Rotor to Max. Output	Ant. Range D (C3) Int. Range D (C6) Rock Rotor—See Note B
7000 KC	Antenna Lead	400 Ohm	D Range	Turn Rotor to Max. Output	7000 KC (C12) Rock Rotor—See Note B
PERMEABILITY TUNING UNIT				TURN SETTING SCREW TO MAXIMUM OUTPUT —See Instruction Book	ADJUST COIL POSITION TO MAXIMUM OUTPUT —See Note D
700 KC	Antenna Lead	200 mmf.	No. 1	Setting Screw No. 1	Antenna Coil No. 1
700 KC	Antenna Lead	200 mmf.	No. 2	Setting Screw No. 2	Antenna Coil No. 2
850 KC	Antenna Lead	200 mmf.	No. 3	Setting Screw No. 3	Antenna Coil No. 3
850 KC	Antenna Lead	200 mmf.	No. 4	Setting Screw No. 4	Antenna Coil No. 4
1100 KC	Antenna Lead	200 mmf.	No. 5	Setting Screw No. 5	Antenna Coil No. 5
1100 KC	Antenna Lead	200 mmf.	No. 6	Setting Screw No. 6	Antenna Coil No. 6

Attenuate the signal from the signal generator to prevent the leveling-off action of the AVC.

After each range is completed, repeat the procedure as a final check.

NOTE A—If the pointer is not at 1500 KC on the dial, loosen the 2 clamps which hold the pointer assembly on the cord, move the pointer to the 1500 KC mark, and tighten the clamps.

NOTE B—Turn the rotor back and forth and adjust the trimmer until the peak of greatest intensity is obtained.

NOTE C—Leave condenser rotor at the 600 KC setting and adjust the signal generator until maximum output is obtained at or near 456 KC.

NOTE D—At the bottom of the permeability tuning unit can be seen six "W" openings. Insert the end of a pair of long nose pliers or a screwdriver in the "W" opening of the proper button and adjust the position of the antenna (rear) coil by twisting the pliers or screwdriver until maximum output is obtained.

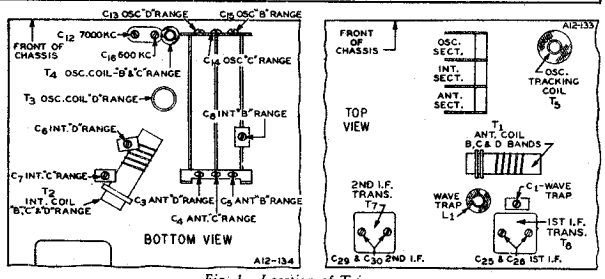

Fig. 1—Location of Trimmers

CAUTION—When aligning the short wave bands be sure NOT to adjust at the image frequency. This can be checked as follows: Let us say the signal generator is set for 5000 KC. The signal will then be heard at 5000 KC on the dial of the radio. The image signal, which is much weaker, will be heard at 5000 less 912 KC, or 4088 KC on the dial. It may be necessary to increase the input signal to hear the image.

NOTICE—Re-alignment is necessary if glass tubes are replaced by their equivalent in metal tubes, or vice versa, in the R.F. and I.F. stages.

©John F. Rider, Publisher

Drive Cord Replacement

LATE MODELS—Tie a knot with a small loop at one end of the new drive cord. Slide a 1¾ inch length of fabric tubing on the cord. The free end of the drive cord should be tied to the tension spring in such a manner that there is a distance of 56⅜ inches between the knots.

Turn the gang condenser to full open position.

Place the looped end of the drive cord over the hook on condenser drive drum A—See Fig. 2. Bring the cord up through the slot in the drum rim and pass to the right (from back of chassis) and around pulley B. Then bring the cord to the left and over pulley C. See that the fabric tubing is now between pulleys B and C. Continue cord down to control shaft D and wind 3½ turns counter-clockwise (from back of chassis) on shaft D. Bring cord up to and over pulley E. Bring cord down to top of drive drum A and wind one turn clockwise around the drum rim.

Pass the remaining drive cord and tension spring through the slot in the drum. Place free end of spring over the hook on the condenser drive drum.

EARLY MODELS—The procedure is the same as for the late models with the following exceptions:

The distance between the knots on the drive cord should be 49¼ inches.

Leaving shaft D (Fig. 3), the drive cord is brought directly to the top of drive drum A and then continued as in late models.

Permeability Tuning and Band Switch Assemblies—Differences in Early Models

A few of the first models used a station button plunger 6$^{13}/_{32}$ inches long. These models may be identified by a red paint mark on the front bracket of the tuning unit at the upper right corner. On later models, this length was changed to 6$^{5}/_{16}$ inches. These models have an orange paint mark in place of the red mark. It is important, therefore, that the length be noted when ordering this part and the correct part number, as shown in the parts list, be specified.

The plungers are replaceable only on the permeability (6 button) tuning unit. In the case of the band switch unit, if any parts require replacing, the entire assembly must be ordered. Two of these assemblies are listed, one using the early short shaft and the other using the later long shaft. The short shaft (early unit) has no paint mark on it. The long shaft (late unit) has an orange paint mark on it.

A change was also made on the tuning rod assembly (Rod on which 2 iron cores are mounted). The rod used on early models was 3¾ inches long and the back end of the rod rested in a small cup in the end of the compression spring. The rod used on late models is 4¾ inches long, extends through the compression spring and projects beyond the rear bracket of the tuning assembly. Only the later type rod complete with the compression spring and a small washer is being furnished for replacement. This complete assembly is interchangeable with the early type.

ATTACHING DIAL POINTER—Tune in a 1500 KC signal. Move the pointer to the 1500 KC mark on the dial and clamp it tightly over the fabric tubing on the cord.

Phonograph Connections

Phonograph connections are made as shown in the schematic circuit diagram. On the back panel of the chassis base is a round knockout 1$^{9}/_{64}$ inches in diameter. An octal base socket is then mounted in this knockout opening. In the case of early models a 1$^{9}/_{64}$ inch hole must be drilled in the back panel. A phono cable assembly may then be purchased (see parts list). On one end of this cable is an octal plug and on the other end is a phono-graph-radio switch and double tip jack.

SERIES A12

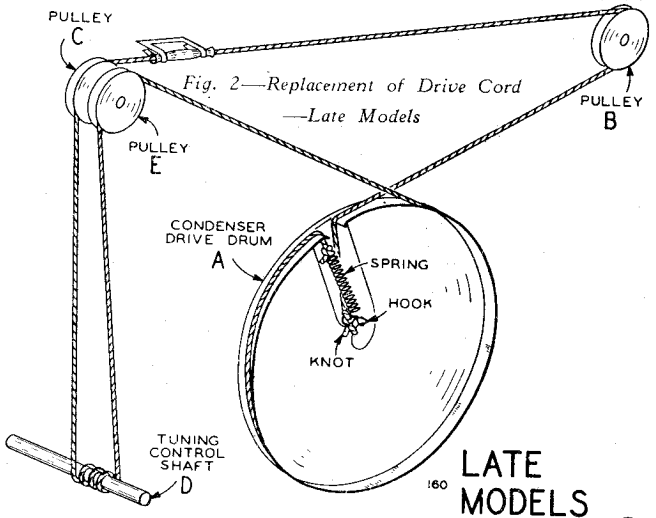

Fig. 2—Replacement of Drive Cord —Late Models

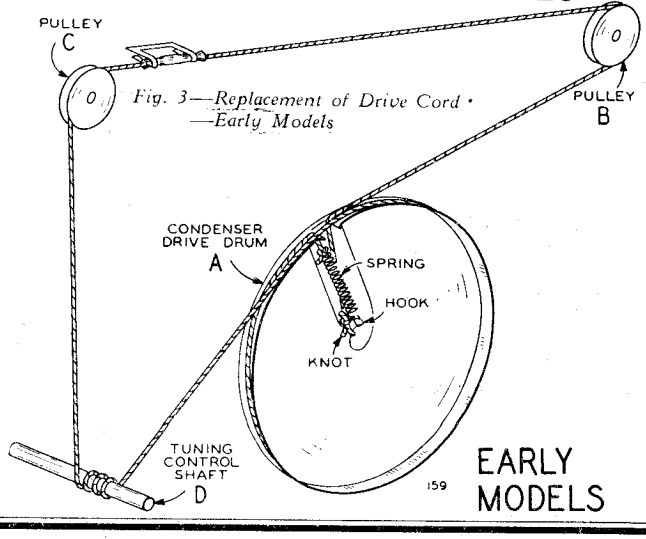

Fig. 3—Replacement of Drive Cord —Early Models

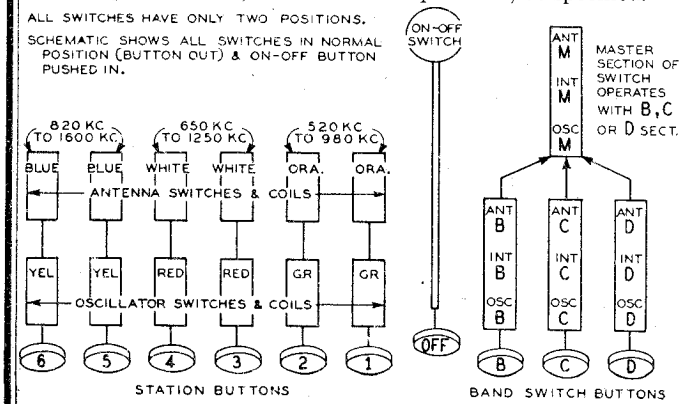

Fig. 5—Permeability Tuning Unit and Band Switch Arrangement.

©John F. Rider, Publisher

Replacement Parts

NOTICE: There is a chassis number label on the chassis base. The chassis number identifies the radio as to chassis, dial, and issue number. When ordering parts or writing, be sure to mention the chassis number.

Manufacturer—Wells-Gardner & Co., 2701 N. Kildare Ave., Chicago, Ill., U. S. A.

MISCELLANEOUS

SOCKETS

Part No.	Description	List Price
3A263	Tube Socket—Octal (8 Prong)	$0.15
3A256	Tube Socket—Octal (7 Prong)	.15
3A261	Tube Socket—Octal (5 Prong)	.10
3A269	Speaker Socket (5 Prong)	.10
13X334	Tuning Eye Tube Socket and Cable Assembly	.35

SPEAKER

When ordering parts for speakers, specify part number of speaker and letters preceding part number stamped on the speaker.

12A307	12" Dynamic Speaker	5.75
	Cone and Voice Coil Assembly for above Speaker	2.80

KNOBS AND BUTTONS

Specify Name of Knob and Name and Model of Radio	Tone Control Knob	.15
	Volume Control Knob	.15
	Tuning Control Knob	.15
10A143	Station, Band Switch, and On-Off Buttons—Ea.	.10

GENERAL

Part No.	Description	List Price
32X110	Tube Shield—for 6U7G T. F.	$0.10
32X115	Tube Shield—for 6U7G R. F.	.20
32X51	Tube Shield Base	.10
2X38	Felt Washers (Used behind knobs)—Doz.	.10
8X69	Rubber Cushion (Chassis Mounting)—Ea.	.10
30X44	Grid Clip only—Doz.	.10
4A68	Terminal Strip (3 lugs insulated—1 mounting foot)	.10
4A52	Terminal Strip (4 lugs insulated—2 mounting feet)	.10
4A38	Terminal Strip (1 lug insulated—1 lug used for mounting)	.10
13X214	Antenna and Ground Lead Assembly	.30
13X80	Line Cord and Plug Assembly	.50
2A113	On-Off Switch	.25
37X118	Lever for operating above Switch	.10
28X27	Tension Spring for above Lever—Doz.	.20

TRANSFORMERS AND COILS

Part No.	Code	Description	List Price
9A930	T1	Antenna Transformer Assembly	$1.55
9A931	T2	R.F. Interstage Transformer Assembly	1.35
9A938	T3	Oscillator Coil Assembly "D" Range	.75
9A932	T4	Oscillator Coil Assembly "B" and "C" Range	1.20
9A929	T5	Oscillator Tracking Coil	.45
9A933	T6	1st I.F. Transformer and Can Assembly	1.75
9A934	T7	2nd I.F. Transformer and Can Assembly	1.45
53X174	T8	117 Volt, 60 Cycle, Standard Power Transformer	3.90
53X175	T8	117 Volt, 25 Cycle, Standard Power Transformer	6.35
53X176	T8	117-234 Volt, 40-60 Cycle, Universal Power Transformer	5.00
51X61	T9	Output Transformer	1.40
9A939	L1	Wave Trap Coil	.30

CONDENSERS

TUBULAR

Part No.	Code	Capacitance	Voltage	List Price
46X105	C9	.10 mf.	360	$0.20
46X212	C10	.04 mf.	360	.15
46X187	C20	.02 mf.	180	.15
46X187	C24	.02 mf.	180	.15
46X223	C27	.02 mf.	240	.10
46X105	C28	.10 mf.	360	.20
46X120	C32	.01 mf.	360	.15
46X176	C34	.08 mf.	180	.15
46X227	C36	.15 mf.	360	.15
46X202	C37	.02 mf.	360	.15
46X108	C38	.10 mf.	360	.20
46X105	C39	.10 mf.	360	.20

ELECTROLYTIC

44X30	C40	14 mf.	450 Wet	1.00
45X238	C41	50 mf.	25 Dry	.55
44X36	C42	40 mf.	290 Wet	1.00

MOLDED

47X97	C2	200 mmf.	.10
47X90	C11	1600 mmf.	.20
47X98	C18	70 mmf.	.10
47X57	C19	100 mmf.	.10
47X57	C21	100 mmf.	.10
47X53	C22	35 mmf.	.10
47X56	C31	50 mmf.	.10
47X72	C33	25 mmf.	.10
47X65	C35	250 mmf.	.15

TRIMMER

Part No.	Code	Capacitance		List Price
17A64	C1	30-90 mmf.	Wave Trap	$0.25
17A88	C3	1-12 mmf.	Antenna Range "D"	.25
	C4	1-12 mmf.	Antenna Range "C"	
	C5	1-12 mmf.	Antenna Range "B"	
17A89	C6	1-12 mmf.	Interstage Range "D"	.10
17A87	C7	1-12 mmf.	Interstage Range "C"	.10
17A89	C8	1-12 mmf.	Interstage Range "B"	.10
17A88	C13	1-12 mmf.	Oscillator Range "D"	.25
	C14	1-12 mmf.	Oscillator Range "C"	
	C15	1-12 mmf.	Oscillator Range "B"	
17A87	C12	40-100 mmf.	7000 KC Range "B" Padder	.60
	C16	300-600 mmf.	600 KC Range "D" Padder	
17A85	C25	70-110 mmf.	1st I.F.	.30
	C26	70-110 mmf.		
17A86	C29	70-150 mmf.	2nd I.F.	.35
	C30	150-250 mmf.		

MISCELLANEOUS

47X100	C17	128 mmf.	Ceramic	.30
47X99	C23	125 mmf.	Ceramic	.30
14A88		3 Gang Condenser less Dial and Drive Assembly		3.45

DIAL AND DRIVE ASSEMBLY

Part No.	Description	List Price
26A96	Dial Mounting Plate only—Complete with 3 Idler Pulleys and Felt Dial Background less Tuning Knob Shaft, Volume and Tone Controls. (See Fig. 2 for method of replacing drive cord)	$1.25
25X520	Brace for above Mounting Plate (Top of Dial Mounting Plate to back of Chassis)	.10
25X521	Brace for Gang Condenser (Gang Mounting Bracket to side of Dial Mounting Plate)	.05
25A267	Tuning Eye Tube Clamp Assembly	.10
26X286	Tuning Knob Shaft only	.10
19X67	Horeshoe Washers for above Shaft—Doz.	.10
24X350	Drive Drum for Condenser	.10
20X250	Spring Clamp to Hold Drive Drum to Shaft—Doz.	.20
	60" Drive Cord (See Figs. 2 and 3)—Ea.	.20
28X174	Tension Spring for Drive Cord—Doz.	.25
	Dial Glass (Specify Name and Chassis Number of Radio)	.40
7X20	Felt Dial Background	.10
15X120	Pointer for Dial	.10
4X252	Dial Escutcheon and Celluloid Crystal Assembly	1.40
7A69	Dial Lamp Socket Assembly (2 Sockets with Wire)	.20
	Dial Lamp—No. 51	.20

PHONO ATTACHMENT PARTS

Part No.	Description	List Price
13X298	30" Phono Cable Assembly Complete (Includes Plug, Double-tip Phono Jack, Switch, and Knob)	$2.70
3A266	Phono Socket—Octal (4 Prong)—Must be ordered for Chassis not equipped with this socket	.10
6A218	Plug (8 Prong) Only of Phono Cable	.15
3A12	Phono Jack Only of Phono Cable	.10
2A50	Phono Switch Only of Phono Cable	.70
10A90	Knob Only of Phono Cable	.20

PERMEABILITY TUNING AND BAND SWITCH ASSEMBLIES

Part No.	Description	List Price
2A109	Band Change Switch Assembly Complete with Trimmer Condensers less Push Buttons (Assembly with 4 push button shafts) Early, Short Shaft Type (No Paint Mark on Assembly)	$4.30
2A125	Same as above—Late, Long Shaft Type (Orange Paint Mark on Assembly)	4.30
25A265	Permeability Tuning Push Button Assembly Complete with 12 Coils less Push Buttons (Assembly with 6 push button shafts)	5.55
26A89	Front Bracket for Tuning Assembly—Includes 6 Setting Screws and Front Switch Contact Spring Strip	.75
20X249	Setting Screw Only—Part above Bracket—Doz.	.20
26A90	Rear Bracket for Tuning Assembly—Includes Rear Switch Contact Spring Strip	.60
26A91	Station Button Plunger with 2 Switch Contracts mounted on Fiber Strips and 1 Rubber Bumper (Early Type—Length 6 13/32")	.10
26A92	Station Button Plunger with 2 Switch Contacts mounted on Fiber Strips and 1 Rubber Bumper (Late Type—Length 6 1/16")	.10
8X64	Rubber Bumper only for above Station Button Plunger and Band Switch Plunger—Doz.	.10
28X182	Compression Spring for Station Button Plunger—Doz.	.10
37X112	Locking Plate for Button Plungers (At Rear of Assembly—Length 7 1/4")	.10
28X183	Flat Pressure Spring for Locking Plate—Doz.	.25
25X522	"L" Shaped Stop Bracket used behind above Spring (At back of Tuning Push Button Assembly)—Doz.	.10
26A88	Fiber Blinder and Felt Pad (Used on Button Plungers and located behind Button Escutcheon)—Doz.	.10
25X504	Adjustable Coil Support Bracket for Rear (Antenna) Coils	.10
28X184	Spring Clamps for holding front and rear coils in place—Doz.	.10
26A93	Tuning Rod Assembly—Includes 2 Iron Cores, One 3/16" Washer, and 1 Compression Spring (for Buttons Nos. 1 and 2—520-980 KC)	.30
26A94	Tuning Rod Assembly—Includes 2 Iron Cores, One 3/16" Washer, and 1 Compression Spring (for Buttons Nos. 3 and 4—650-1250 KC)	.30
26A95	Tuning Rod Assembly—Includes 2 Iron Cores, One 3/16" Washer, and 1 Compression Spring (for Buttons Nos. 5 and 6—820-1600 KC)	.30
9A925	Antenna Coil Assembly (Color—Orange; Range 520-980 KC; Buttons 1 and 2)	.15
9A936	Antenna Coil Assembly (Color—White; Range 650-1250 KC; Buttons 3 and 4)	.15
9A926	Antenna Coil Assembly (Color—Blue; Range 820-1600 KC; Buttons 5 and 6)	.15
9A927	Oscillator Coil Assembly (Color—Green; Range 520-980 KC; Buttons 1 and 2)	.15
9A937	Oscillator Coil Assembly (Color—Red; Range 650-1250 KC; Buttons 3 and 4)	.15
9A928	Oscillator Coil Assembly (Color—Yellow; Range 820-1600 KC; Buttons 5 and 6)	.15
9X47	Fiber Strip to Cover Setting Screws—Doz.	.15
26A87	2 Cell Letter Sheets and Celluloid Tabs	.45

RESISTORS

CARBON

Part No.	Code	Resistance	Wattage	List Price
C9480Z	R1	9,000 Ohm	1.0	$0.15
C9520Z	R2	20,000 Ohm	1.0	.15
A95105	R3	1 Megohm	0.2	.10
A95105	R4	1 Megohm	0.2	.10
A94302	R5	3,000 Ohm	0.2	.10
A94503	R6	50,000 Ohm	0.2	.15
C94203	R7	20,000 Ohm	0.5	.15
A94203	R8	20,000 Ohm	1.0	.15
B94503	R9	50,000 Ohm	0.5	.15
A95205	R10	2 Megohm	0.2	.15
A95205	R11	2 Megohm	0.2	.15
A95304	R13	200,000 Ohm	0.2	.10
A95405	R14	4 Megohm	0.2	.10
A95604	R15	500,000 Ohm	0.2	.15
A95702	R17	7,000 Ohm	0.2	.10
A94200	R18	20 Ohm	0.2	.15
B95301	R19	300 Ohm	2.0	.30
B94403	R21	40,000 Ohm	0.5	.20
A95154	R23	150,000 Ohm	0.5	.15
A94104	R24	100,000 Ohm	0.2	.15
G94133	R25	13,000 Ohm	5.0	.45
A94101	R26	100 Ohm	0.2	.15
A93204	R27	200,000 Ohm	0.2	.20
A93172	R28	11,700 Ohm	0.2	.20
A95204	R29	200,000 Ohm	0.2	.20

VARIABLE

Part No.	Code	Resistance	Wattage	List Price
36X245	R16	2.0 Megohm	Volume Control	.60
40X228	R22	1.0 Megohm	Tone and Selectivity Control	.90

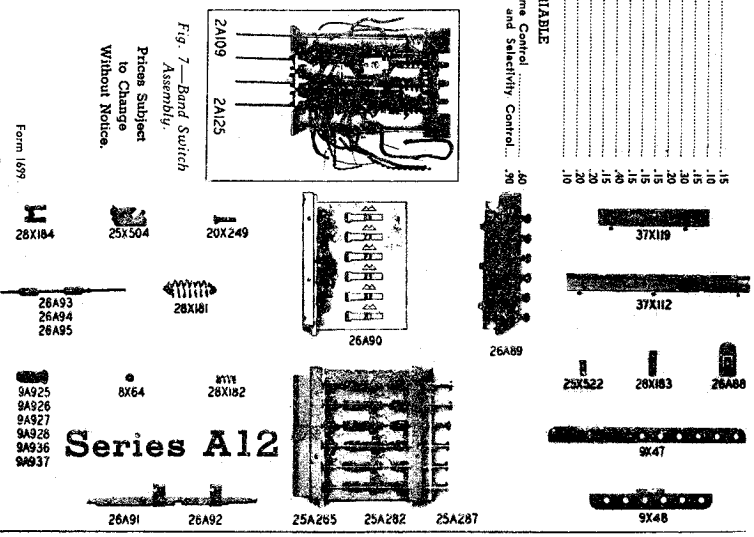

Fig. 7—Band Switch Assembly.

Fig. 6—Permeability Tuning Unit.

Prices Subject to Change Without Notice.

Form 1699

©John F. Rider, Publisher

SPECIFICATIONS

Power Consumption - 70 Watts (At 117 volts 60 cycles)

Power Output - - - - - - - 3.0 Watts Undistorted
4.0 Watts Maximum

Selectivity - 31.5 KC Broad at 1000 times Signal
(Sharp)

Sensitivity

B Range (Manual Tuning)	1.0 Microvolt Average
B Range (Automatic Tuning)	1.0 Microvolt Average
C Range	3.0 Microvolts Average
D Range	5.0 Microvolts Average

Intermediate Frequency - - - - - - - 456 KC.

Speaker - - - - - - - - 10" or 12" Dynamic

Tuning Frequency Range

B Range (Manual Tuning)	528	to	1830 KC
C Range (Manual Tuning)	1810	to	6350 KC
D Range (Manual Tuning)	6300	to	22000 KC
Buttons 1 & 2 (Automatic Tuning)	520	to	980 KC
Buttons 3 & 4 (Automatic Tuning)	650	to	1250 KC
Buttons 5 & 6 (Automatic Tuning)	820	to	1600 KC

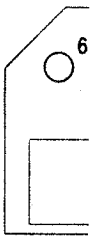

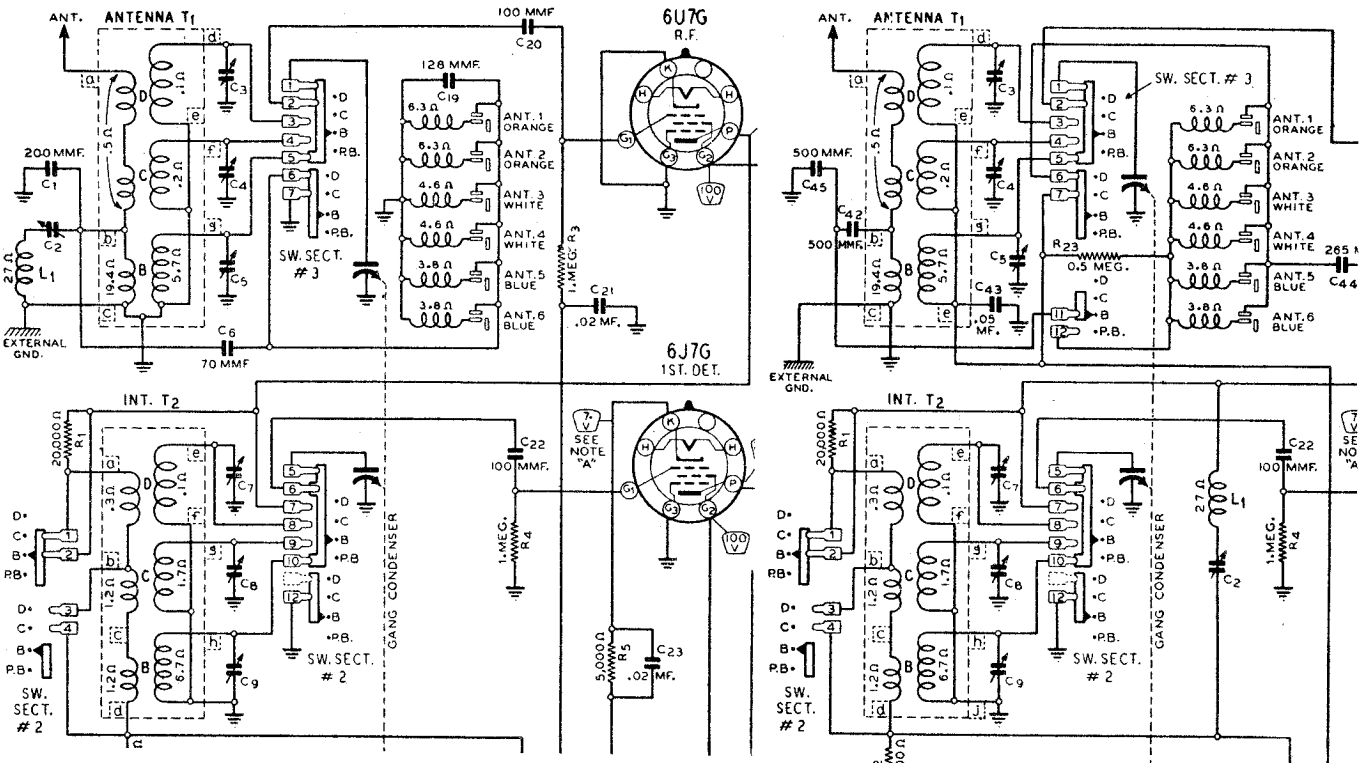

Fig. 4—Partial Schematic Circuit Diagram—Issue No. 1

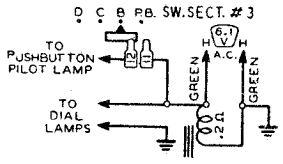

FOR TUNER DATA
SEE INDEX

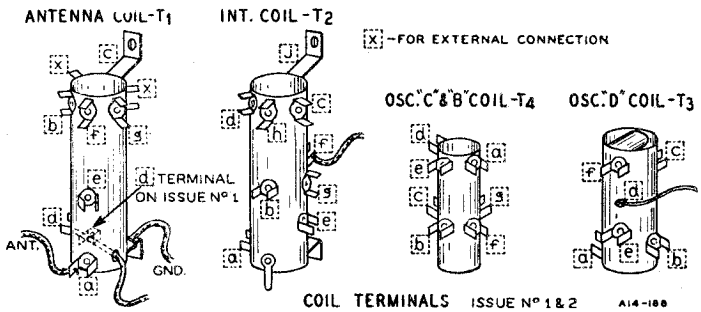

Fig. 3—Schema

©John F. Rider, Publisher

NER & CO.

MODEL A14 Series
Schematic, Voltage
Coils, Socket, Phono.
Specs., Sensitivity

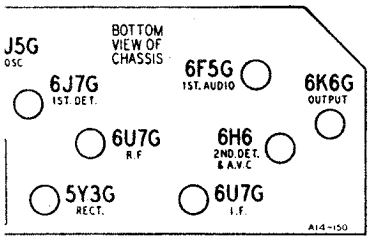

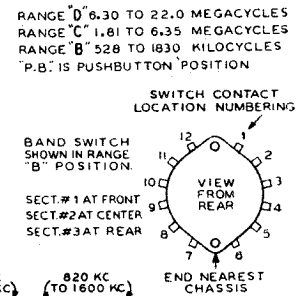

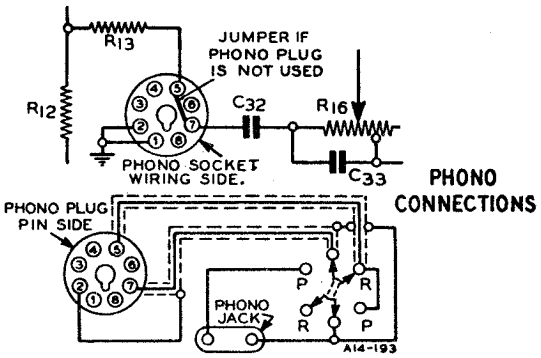

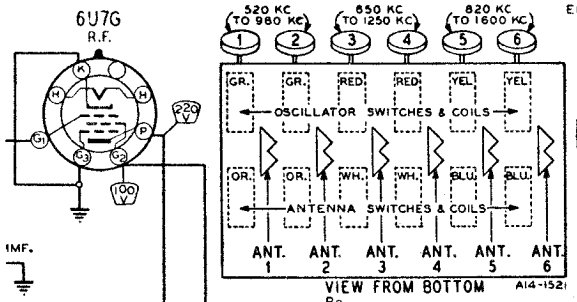

HOME RADIO • A. C. POWER SUPPLY
9 TUBE • 3 BAND • ALL WAVE
WITH AUTOMATIC TUNING

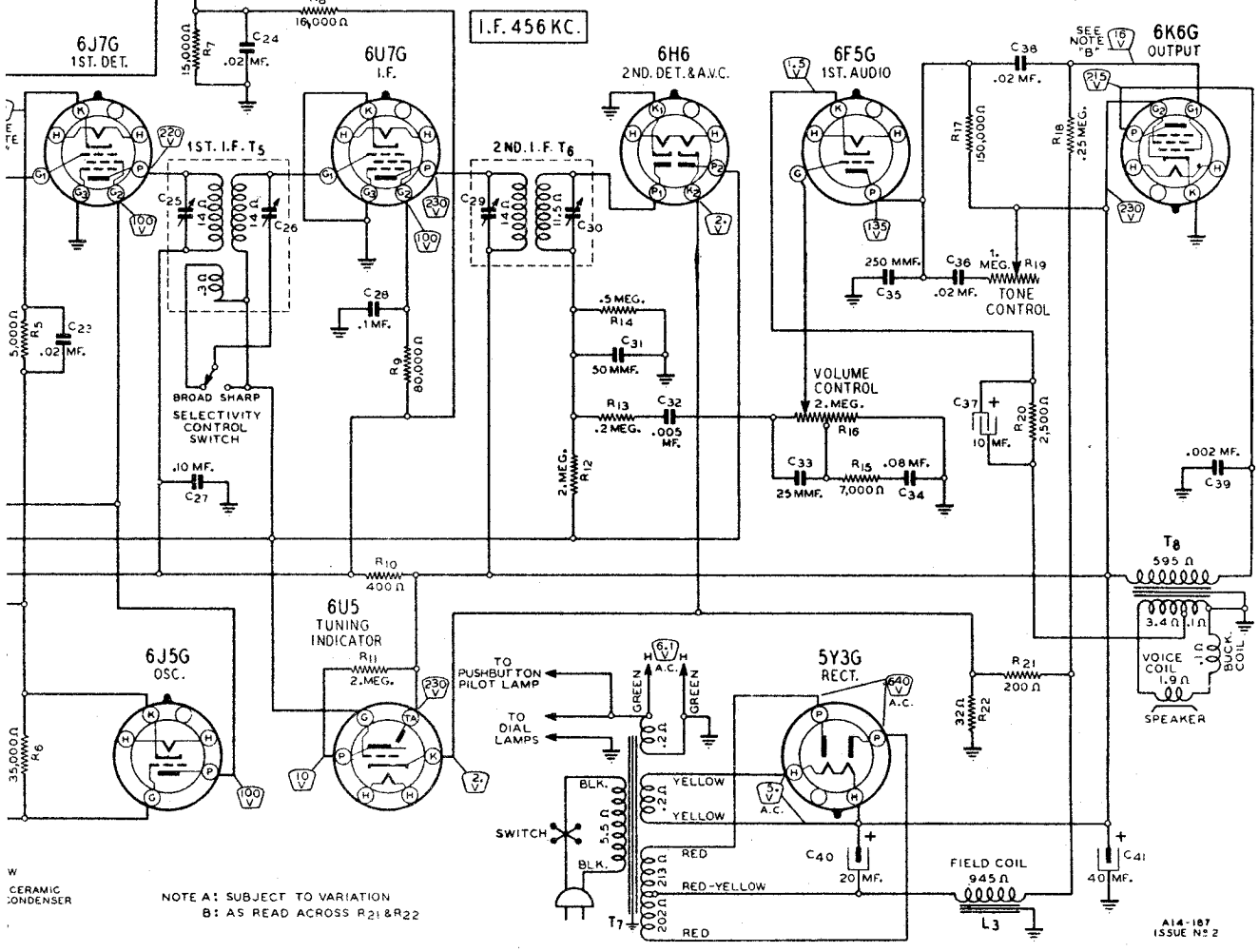

tic Circuit Diagram—Issue No. 2

SERIES A14

MAY, 1938

WELLS-GARDNER & CO.

MODEL A14 Series
Circuit Data, Changes
Phono. Data, Notes
Parts

PRICES ARE SUBJECT TO CHANGE WITHOUT NOTICE

CONDENSERS

TUBULAR

Part No.	Code	Capacitance	Voltage		List Price
46X212	C10	.04 mf.	360		$0.15
46X187	C21	.02 mf.	180	(Issue No. 1 only)	.15
46X187	C23	.02 mf.	180		.15
46X223	C24	.02 mf.	240		.10
[illegible]	C27, C28	.10 mf.	360		.20
46X147	C32	.005 mf.	360		.15
46X176	C34	.08 mf.	180		.15
[illegible]	C36, C38	.02 mf.	360		.15
46X190	C39	.002 mf.	600		.15
[illegible]	C43	.05 mf.	180	(Issue No. 2)	.15

ELECTROLYTIC

Part No.	Code	Capacitance	Voltage	List Price
45X239	C37	10 mf.	25 Dry	.30
44X39	C40	20 mf.	390 Wet	.90
44X40	C41	40 mf.	300 Wet	.90

MOLDED

Part No.	Code	Capacitance		List Price
47X97	C1	200 mmf.	(Issue No. 1 only)	.10
47X98	C6	70 mmf.		.10
47X90	C16	1600 mmf.		.20
47X93	C18	35 mmf.		.15
47X57	C20	100 mmf.	(Issue No. 1 only)	.10
47X57	C22	100 mmf.		.10
47X56	C31	50 mmf.		.10
47X72	C33	25 mmf.		.10
47X65	C35	280 mmf.		.15
47X106	C42, C46	500 mmf.	(Issue No. 2)	.20

TRIMMER

Part No.	Code	Capacitance		List Price
17A64	C2	30-90 mmf.	Wave Trap	$0.25
17A88	C3	1-12 mmf.	Antenna Range "D"	.25
	C4	1-12 mmf.	Antenna Range "C"	
	C5	1-12 mmf.	Antenna Range "B"	
17A88	C7	1-12 mmf.	Interstage Range "D"	.25
	C8	1-12 mmf.	Interstage Range "C"	
	C9	1-12 mmf.	Interstage Range "B"	
17A35	C11	40-100 mmf.	7000 KC Padder	.45
	C12	250-550 mmf.	600 KC Padder	
17A88	C13	1-12 mmf.	Oscillator Range "D"	.25
	C14	1-12 mmf.	Oscillator Range "C"	
	C15	1-12 mmf.	Oscillator Range "B"	
17A85	C25	70-110 mmf.	1st I.F.	.30
	C26	70-110 mmf.		
17A86	C29	70-150 mmf.	2nd I.F.	.35
	C30	150-250 mmf.		

Circuit

This model is a 3 band A.C. operated radio with a 6 button inductive type automatic tuning system.

A 4 position rotary switch is used to switch the tuning circuits from automatic (push button) tuning to any of the 3 manual tuning ranges (one broadcast and 2 short wave ranges).

In MANUAL TUNING, an R. F. antenna transformer with tuned secondary is used before the 6U7G R. F. tube. The output of this tube is fed through another R. F. transformer with tuned secondary into the 6J7G 1st detector tube. A 6J5G tube functions as a separate oscillator. The antenna, interstage, and oscillator circuits are tuned by sections of the gang condenser.

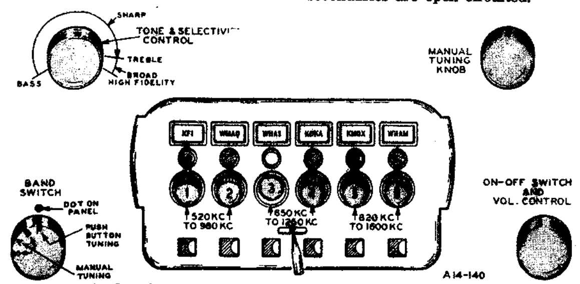

Fig. 1—Location of Controls and Push Buttons—No. 9 Dial Escutcheon

In AUTOMATIC TUNING, the gang condenser is not used. A single tuned circuit is used before the R. F. tube while a stage of resistance coupling is employed between this tube and the 1st detector. The other automatic tuned circuit is the oscillator grid circuit. Tuning of the R. F. and oscillator fixed tuned circuits to the desired frequency is accomplished by varying the inductance of tuning coils by changing the permeability of the magnetic circuit. This is done by moving an iron core in and out of the coil.

The iron cores within the automatic tuning antenna and oscillator coil forms are secured to a brass rod. This rod is moved back and forth by a screw at the front of the radio.

Alignment between the oscillator and antenna automatic tuning coils is obtained by changing the antenna (rear) coil position while the iron core remains stationary.

Now, to describe the connections for one MANUAL TUNING range: Let us assume that the rotary band switch is turned to the range B position. The antenna transformer B band secondary is connected to the R. F. tube grid circuit. The antenna transformer C and D band secondaries are open circuited.

In issue No. 1 sets, if any automatic tuning button is depressed, the automatic tuning antenna coil corresponding to that button is short circuited. In issue No. 2 sets, the connection between the antenna circuit and the automatic tuning antenna coils is open circuited by the band switch.

The interstage transformer B band secondary is connected to the 1st detector tube grid circuit. The interstage transformer C and D band secondaries are open circuited.

The oscillator B band grid coil is connected to the grid circuit of the oscillator tube. The oscillator B band cathode coil is connected to ground. The oscillator C and D band grid coils are open circuited. If any automatic tuning button is depressed, the automatic tuning oscillator coil corresponding to that button is short circuited.

In like manner, to describe the connections for one AUTOMATIC TUNING circuit, assume that the band switch is in the push button position and button number 1 is depressed.

In issue No. 1 sets, the antenna circuit is connected to the R. F. tube grid circuit through the band switch. The antenna circuit is also connected to the antenna No. 1 automatic tuning coil through Ant. 1 switch. The antenna No. 1 coil is tuned by fixed condenser C19.

In issue No. 2 sets, the antenna circuit is connected to the automatic tuning antenna coils through the band switch. The antenna No. 1 automatic tuning coil is connected to the R. F. tube grid circuit through the Ant. 1 switch. Antenna No. 1 coil is tuned by condensers C44 and C45.

In both issues, the connections from the antenna and interstage transformer secondaries are open circuited.

The plate of the R. F. tube is connected in series with resistor R1 to the B+ circuit. It is also connected through coupling condenser C22 to the grid of the 1st detector. The latter is connected through grid leak R4 to ground.

The oscillator cathode circuit is connected through the tap on tracking coil L2 to ground. This tracking coil is connected through the band switch to the control grid circuit of the oscillator tube. It is also connected to oscillator No. 1 coil through the Osc. 1 switch. The tracking or oscillator grid coil is tuned by fixed condenser C17 and the inductance of oscillator coil No. 1.

One stage of I. F. amplification is employed using a 6U7G tube. An expander is used in the 1st I. F. transformer for high fidelity reception.

A 6H6 tube functions as a diode 2nd detector. AVC voltage is applied to the control grid circuits of the R. F. and I. F. tubes.

Across the volume control resistor R16 is a filter composed of condensers C33 and C34 and resistor R15. At high volume settings, the filter is not effective. At low volume settings, the action of this filter results in an increase of high and low frequency amplitudes relative to the other frequency amplitudes.

The output of the 2nd detector is applied to the 6F5G A. F. tube. The output of this tube is fed through resistance coupling into the 6K6G output tube.

A dynamic reproducer is employed.

Degeneration or negative feedback is used in the audio amplifier. A portion of the voltage developed across the secondary of the output transformer is fed back into the cathode circuit of the 1st audio tube. The voltage fed back is of the proper phase to reduce the amplitude of certain frequencies. This results in a reduction in distortion.

The power unit uses a 5Y3G full wave rectifier. A 6U5 tuning indicator tube is employed.

General Service Data

Issue Number

The last digit of the number on the chassis number label identifies the radio as to the issue number.

Issue No. 1

Mechanical Assembly—The station button plunger has a length of 6 9/16 inches.

The locking plate for the station button plungers has 2 swivel tabs which fit into slots in the rear bracket of the tuner assembly—See Fig. 8.

Electrical Assembly—The schematic circuit diagram (Fig. 3) is that of issue No. 2 sets. The partial schematic illustration (Fig. 4) shows the sections of the issue No. 1 circuit which differ from the issue No. 2 circuit.

The A. V. C. voltage is applied directly to the R. F. tube grid circuit through a resistor.

Wave trap (L1 and C2) is in the antenna circuit.

Lugs 11 and 12 of band switch section No. 3 are used to connect a pilot lamp when the rotary band switch is in the automatic tuning (push button) position.

Issue No. 2

Mechanical Changes—The station button plunger has a length of 7 3/16 inches.

The locking plate for the station button plungers has been re-designed and now employs 2 side arms mounted in rubber cushioned hinge brackets which are attached to the rear bracket of the tuner assembly by 2 screws—See Fig. 7.

Electrical Changes—The schematic circuit diagram (Fig. 3) is that of issue No. 2 sets.

The A. V. C. is fed into the R. F. tube grid circuit through the manual and the automatic tuning antenna coils.

The wave trap is in the R. F. tube plate circuit.

Lugs 11 and 12 of band switch section No. 3 are used to open the connection between the antenna circuit and the automatic tuning antenna coils.

The following changes are made to bring about the change mentioned above in the A. V. C. circuit:

C43 is inserted between the secondary of the antenna transformer and ground to isolate the A. V. C. from ground. C21 is replaced by C43. R23 is added to isolate the automatic tuning coils from the manual tuning coils. C1 is replaced by C42 and C45 in the automatic tuning coil circuit. R3 and C20 are removed from the R. F. tube grid circuit. C19 is replaced by C44 in the automatic tuning coil circuit.

Drive Cord Replacement

SEE A12 SERIES.

ATTACHING DIAL POINTER—Tune in a 1500 KC signal. Move the pointer to the 1500 KC mark on the dial and clamp it tightly over the fabric tubing on the cord.

Phonograph Connections

Phonograph connections are made as shown in the schematic circuit diagram Fig. 3. On the top of the chassis base and between the 6H6 and 6F5G tube sockets is a round knockout opening 1 9/64 inches in diameter. An octal base socket is mounted in this knockout opening and wired as shown in the schematic.

A phono cable assembly may then be purchased (See parts list). On one end of this cable is an octal plug and on the other end is a phonograph-radio switch and double tip jack.

Some models are shipped from the factory equipped with the phono socket. A jumper is inserted in this socket which must be removed if the phonograph installation is made —See Fig. 3.

Voltages at Sockets

The voltages at sockets are shown on the schematic circuit diagram. Unless otherwise specified, the voltage indicated is between the socket terminal and ground.

These voltages are read under the following conditions:
Line Voltage—117.
Volume Control—Maximum.
Antenna Shorted to Ground.
Readings taken with 1000 ohm-per-volt meter.

Twenty-Five Cycle Models

The twenty-five cycle receiver differs from the sixty cycle receiver only in the fact that a different power transformer is used.

©John F. Rider, Publisher

MODEL A14 Series
Trimmers, Alignment
Parts List

WELLS-GARDNER & CO.

Series A14 Replacement Parts

NOTICE: There is a chassis number label on the chassis base. The chassis number identifies the radio as to chassis, dial, and issue number. When ordering parts or writing, be sure to mention the chassis number.

Manufacturer—Wells-Gardner & Co., 2701 N. Kildare Ave., Chicago, Ill., U. S. A.

SPEAKERS

When ordering parts for speakers, specify part number of speaker and letters preceding part number stamped on the speaker.

12A310	10" Dynamic Speaker	4.75
	Cone and Voice Coil Assembly for above Speaker	2.00
12A311	12" Dynamic Speaker	4.00
	Cone and Voice Coil Assembly for above Speaker	2.80
12A316	10" Dynamic Speaker	5.40
	Cone and Voice Coil Assembly for above Speaker	2.00

TRANSFORMERS AND COILS

Part No.	Code	Description	List Price
9A953	T1	Antenna Transformer Assembly (Issue No. 1 only)	$1.65
9A994	T1	Antenna Transformer Assembly (Issue No. 2)	1.65
9A954	T2	R.F. Interstage Transformer Assembly	1.40
9A956	T3	Oscillator Coil Assembly "D" Range	.75
9A955	T4	Oscillator Coil Assembly "B" and "C" Range	1.00
9A957	T5	1st I.F. Transformer and Can Assembly	1.60
9A958	T6	2nd I.F. Transformer and Can Assembly	$1.30
53X182	T7	117 Volt, 60 Cycle, Standard Power Transformer	4.00
53X183	T7	117 Volt, 25 Cycle, Standard Power Transformer	4.75
53X184	T7	117 Volt, 40-60 Cycle, Universal Power Transformer	4.15
51X62	T8	Output Transformer	1.35
9A939	L1	Wave Trap Coil	.35
9A929	L2	Oscillator Tracking Coil	.45

RESISTORS

CARBON

Part No.	Code	Resistance	Wattage		List Price
C94203	R1	20,000 Ohm	1.0		$0.15
C94253	R2	25,000 Ohm	1.0		.15
A95105	R3	1 Megohm	0.2	(Issue No. 1 only)	.10
A95105	R4	1 Megohm	0.2		.10
A94502	R5	5,000 Ohm	0.2		.15
A94353	R6	35,000 Ohm	0.2		.15
C94153	R7	15,000 Ohm	1.0		.15
D94163	R8	16,000 Ohm	2.0		.20
B94803	R9	80,000 Ohm	0.5		.15
A95401	R10	400 Ohm	0.2		.10
A95205	R11,R12	2 Megohm	0.2		.10
A95204	R13	200,000 Ohm	0.2		.10
A95504	R14	500,000 Ohm	0.2		.10
A95702	R15	7,000 Ohm	0.2		.10
A95154	R17	150,000 Ohm	0.2		.10
A95254	R18	250,000 Ohm	0.2		.10
A94252	R20	2,500 Ohm	0.2		.15
C93201	R21	200 Ohm	1.0		.20
A94320	R22	32 Ohm	0.2		.15
A95504	R23	500,000 Ohm	0.2	(Issue No. 2)	.10

VARIABLE

36X250	R16	2 Megohm	Volume Control and On-Off Switch	.80
40X228	R19	1 Megohm	Tone and Selectivity Control	.90

CONDENSERS

MISCELLANEOUS

47X107	C17	130 mmf. Ceramic	.30
47X103	C19	128 mmf. Ceramic (Issue No. 1 only)	.25
47X195	C14	765 mmf. Silvered Mica (Issue No. 2)	.30
14A98		3 Gang Condenser less Dial and Drive Assembly (Issue No. 1 only)	3.45
14A93		3 Gang Condenser less Dial and Drive Assembly (Issue No. 2)	3.45

DIAL AND DRIVE ASSEMBLY

No. 9 DIAL

Models using this dial may be identified by the round push buttons used on the tuning unit. The station call letters are mounted in the escutcheon above the buttons.

SEE PARTS :-A 12 SERIES.

No. 10 DIAL

Models using this dial may be identified by the rectangular push buttons used on the tuning unit. The station call letter tabs are mounted in the push button.

26A114	Dial Mounting Plate only—Complete with 3 Idler Pulleys less Tuning Knob Shaft and Tone Control (See Fig. 5 for method of replacing drive cord)	$1.40
25X527	Brace for above Mounting Plate (Top of Dial Mounting Plate to back of Chassis)	.10
25X528	Brace for Gang Condenser (Gang Mounting Bracket to side of Dial Mounting Plate)	.10
26X291	Tuning Eye Tube Clamp Assembly	.10
19X67	Tuning Knob Shaft only	.10
24X350	Horse Shoe Washers for above Shaft Doz.	.10
20X250	Drive Drum for Condenser	.10
	Spring Clamp to hold Drive Drum to Shaft Doz.	.20
	60" Drive Cord (See Fig. 5) Ea.	.20
28X174	Tension Spring for Drive Cord Doz.	.26
	Dial Glass (Specify Name and Chassis Number of Radio)	.40
58X330	Dial Background	.85
15X131	Pointer for Dial	.10
30X111	Clamp for Glass Crystal	.10
17X32	Plain Glass Crystal	.10
7A60	Dial Lamp Socket Assembly with Wire	.10
	Dial Lamp—No. 51	.20

PHONO ATTACHMENT PARTS

Part No.	Description	List Price
13X298	30" Phono Cable Assembly Complete (Includes Plug, Double-tip Phono Jack, Switch, and Knob)	$2.70
	Phono Socket—Octal (4 Prong)—Must be ordered for Chassis not equipped with this socket	.10
3A218	Plug (8 Prong) Only of Phono Cable	.15
3A12	Phono Jack Only of Phono Cable	.10
2A50	Phono Switch Only of Phono Cable	.70
10A90	Knob Only of Phono Cable	.20

AUTOMATIC TUNING ASSEMBLY

Part No.	Description	List Price
25A302	Automatic Tuning Push Button Assembly Complete with 12 Coils less Push Buttons	$5.55
26A89	Front Bracket for Tuning Assembly—Includes 6 Setting Screws and Front Switch Contact Spring Strip	.75
20X249	Setting Screw Only—Part of above Bracket Doz.	.20
26A90	Rear Bracket for Tuning Assembly—Includes Rear Switch Contact Spring Strip—Issue No. 1 Only	.60
26A115	Rear Bracket for Tuning Assembly—Includes Rear Switch Contact Spring Strip—Issue No. 2	.60
26A92	Station Button Plunger with 2 Switch Contacts mounted on Fiber Strips and 1 Rubber Bumper—Issue No. 1 Only	.10
26A111	Station Button Plunger with 2 Switch Contacts mounted on Fiber Strips and 1 Rubber Bumper—Issue No. 2	.10
8X64	Rubber Bumper only for above Station Button Plunger Doz.	.10
28X198	Compression Spring for Station Button Plunger Doz.	.10
37X119	Locking Plate for Button Plungers (At Rear of Assembly—Length 4⅝")—Issue No. 1 Only	.10
28X183	Flat Pressure Spring for Locking Plate Doz.	.25
25X522	"L" Shaped Stop Bracket used behind above Spring (At back of Tuning Push Button Assembly)—Issue No. 1 Only Doz.	.10
37X130	Locking Plate for Button Plungers (At rear of Assembly)—Issue No. 2	.10
30X113	Hinge Bracket for Locking Plate—Issue No. 2 Doz.	.10
8X71	Rubber Bushing for Hinge Bracket—Issue No. 2 Doz.	.15
26A88	Fiber Blinder and Felt Pad (Used on Button Plungers and located behind Button Escutcheon)—No. 9 Dial only Doz.	.10
25X284	Adjustable Coil Support Bracket for Rear (Antenna) Coils	.10
28X194	Spring Clamps for holding front and rear coils in place Doz.	.10
26A93	Tuning Rod Assembly—Includes 2 Iron Cores, One 3/16" Washer, and 1 Compression Spring (for Buttons Nos. 1 and 2—520-980 KC)	.30
26A94	Tuning Rod Assembly—Includes 2 Iron Cores, one 3/16" Washer, and 1 Compression Spring (for Buttons Nos. 3 and 4—650-1250 KC)	$0.30
26A95	Tuning Rod Assembly—Includes 2 Iron Cores, One 3/16" Washer, and 1 Compression Spring (for Buttons Nos. 5 and 6—820-1600 KC)	.30
28X181	Compression Spring for Tuning Rod Doz.	.25
9A925	Antenna Coil Assembly (Color—Orange; Range 520-980 KC; Buttons 1 and 2)	.15
9A936	Antenna Coil Assembly (Color—White; Range 650-1250 KC; Buttons 3 and 4)	.15
9A926	Antenna Coil Assembly (Color—Blue; Range 820-1600 KC; Buttons 5 and 6)	.15
9A927	Oscillator Coil Assembly (Color—Green; Range 520-980 KC; Buttons 1 and 2)	.15
9A937	Oscillator Coil Assembly (Color—Red; Range 650-1250 KC; Buttons 3 and 4)	.15
9A928	Oscillator Coil Assembly (Color—Yellow; Range 820-1600 KC; Buttons 5 and 6)	.15
9X48	Fiber Strip to Cover Setting Screws—No. 9 Dial Doz.	.15
9X60	Fiber Strip to Cover Setting Screws—No. 10 Dial Doz.	.15
26A97	2 Call Letter Sheets (U. S. Stations) and Celluloid Tabs —For Mounting in Escutcheon—No. 9 Dial	.40
26A113	1 Call Letter Sheet (U. S. Stations) and Celluloid Tabs —For Mounting on Push Button—No. 10 Dial	.15

Prices Subject to Change Without Notice.

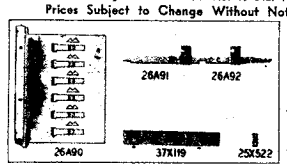

Fig. 8—Issue No. 1 Automatic Tuning Unit Parts Which Differ From Issue No. 2.

ALIGNMENT PROCEDURE

The following equipment is required for aligning:

An All Wave Signal Generator which will provide an accurately calibrated signal at the test frequencies as listed.

Output indicating Meter—Non-Metallic Screwdriver.

Dummy Antennas—.1 mf., 200 mmf., and 400 ohms.

Volume Control—Maximum All Adjustments.
Selectivity Control—Sharp Position All Adjustments.
Connect Radio Chassis to Ground Post of Signal Generator with a Short Heavy Lead.
Allow Chassis and Signal Generator to "Heat Up" for several minutes.

	SIGNAL GENERATOR FREQUENCY SETTING	CONNECTION AT RADIO	DUMMY ANTENNA	BAND SWITCH SETTING	CONDENSER SETTING	ADJUST TRIMMERS TO MAXIMUM (Unless otherwise specified)
I. F.	456 KC	Grid of I.F. Tube	.1 mf.	B Range	Turn Rotor to Full Open	2nd I.F. (C29) & (C30)
	456 KC	Grid of 1st Det.	.1 mf.	B Range	Turn Rotor to Full Open	1st I.F. (C25) & (C26)
WAVE TRAP	456 KC	Antenna Lead	200 mmf.	Push Button Position Button No. 1 Depressed		Wave Trap (C2) Adjust for MINIMUM Output
RANGE B	1830 KC	Antenna Lead	200 mmf.	B Range	Turn Rotor to Full Open	Oscillator Range B (C15)
	1500 KC	Antenna Lead	200 mmf.	B Range	Turn Rotor to Max. Output Set Indicator to 1500 KC—See Note A	Ant. Range B (C5) Int. Range B (C9)
	600 KC	Antenna Lead	200 mmf.	B Range	Turn Rotor to Max. Output	600 KC (C12) Rock Rotor—See Note B
RANGE C	6350 KC	Antenna Lead	400 Ohm	C Range	Turn Rotor to Full Open	Oscillator Range C (C14)
	6000 KC	Antenna Lead	400 Ohm	C Range	Turn Rotor to Max. Output	Antenna Range C (C4) Int. Range C (C8)
RANGE D	22,000 KC	Antenna Lead	400 Ohm	D Range	Turn Rotor to Full Open	Oscillator Range D (C13)
	20,000 KC	Antenna Lead	400 Ohm	D Range	Turn Rotor to Max. Output	Ant. Range D (C3) Int. Range D (C7) Rock Rotor—See Note B
	7000 KC	Antenna Lead	400 Ohm	D Range	Turn Rotor to Max. Output	7000 KC (C11) Rock Rotor—See Note B

PERMEABILITY TUNING UNIT		BUTTON DEPRESSED (Band Switch in Push Button Position)	TURN SETTING SCREW TO MAXIMUM OUTPUT —See Instruction Book	ADJUST COIL POSITION TO MAXIMUM OUTPUT —See Note C
700 KC	Antenna Lead	200 mmf.	No. 1	Setting Screw No. 1	Antenna Coil No. 1
700 KC	Antenna Lead	200 mmf.	No. 2	Setting Screw No. 2	Antenna Coil No. 2
850 KC	Antenna Lead	200 mmf.	No. 3	Setting Screw No. 3	Antenna Coil No. 3
850 KC	Antenna Lead	200 mmf.	No. 4	Setting Screw No. 4	Antenna Coil No. 4
1100 KC	Antenna Lead	200 mmf.	No. 5	Setting Screw No. 5	Antenna Coil No. 5
1100 KC	Antenna Lead	200 mmf.	No. 6	Setting Screw No. 6	Antenna Coil No. 6

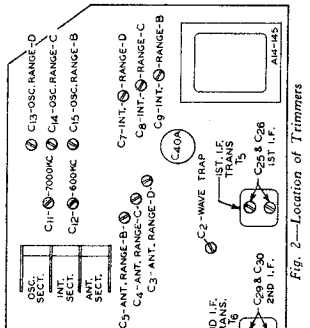

Fig. 2—Location of Trimmers

Attenuate the signal from the signal generator to prevent the leveling-off action of the AVC.

After each range is completed, repeat the procedure as a final check.

NOTE A—If the pointer is not at 1500 KC on the dial, loosen the 2 clamps which hold the pointer assembly on the cord, move the pointer to the 1500 KC mark, and tighten the clamps.

NOTE B—Turn the rotor back and forth and adjust the trimmer until the peak of greatest intensity is obtained.

NOTE C—At the bottom of the permeability tuning unit can be seen six "W" openings. Insert the end of a pair of long nose pliers or a screwdriver in the "W" opening of the proper button and adjust the position of the antenna (rear) coil by twisting the pliers or screwdriver until maximum output is obtained.

CAUTION—When aligning the short wave bands, be sure NOT to adjust at the image frequency. This can be checked as follows: Let us say the signal generator is set for 5000 KC. The signal will then be heard at 5000 KC on the dial of the radio. The image signal, which is much weaker, will be heard at 5000 less 912 KC, or 4088 KC on the dial. It may be necessary to increase the input signal to hear the image.

NOTICE—Re-alignment is necessary if glass tubes are replaced by their equivalent in metal tubes, or vice versa, in the R.F. and I.F. stages.

©John F. Rider, Publisher

WESTERN AUTO SUPPLY CO.

MODEL D 699
Schematic, Socket
Trimmers, Parts
Voltage

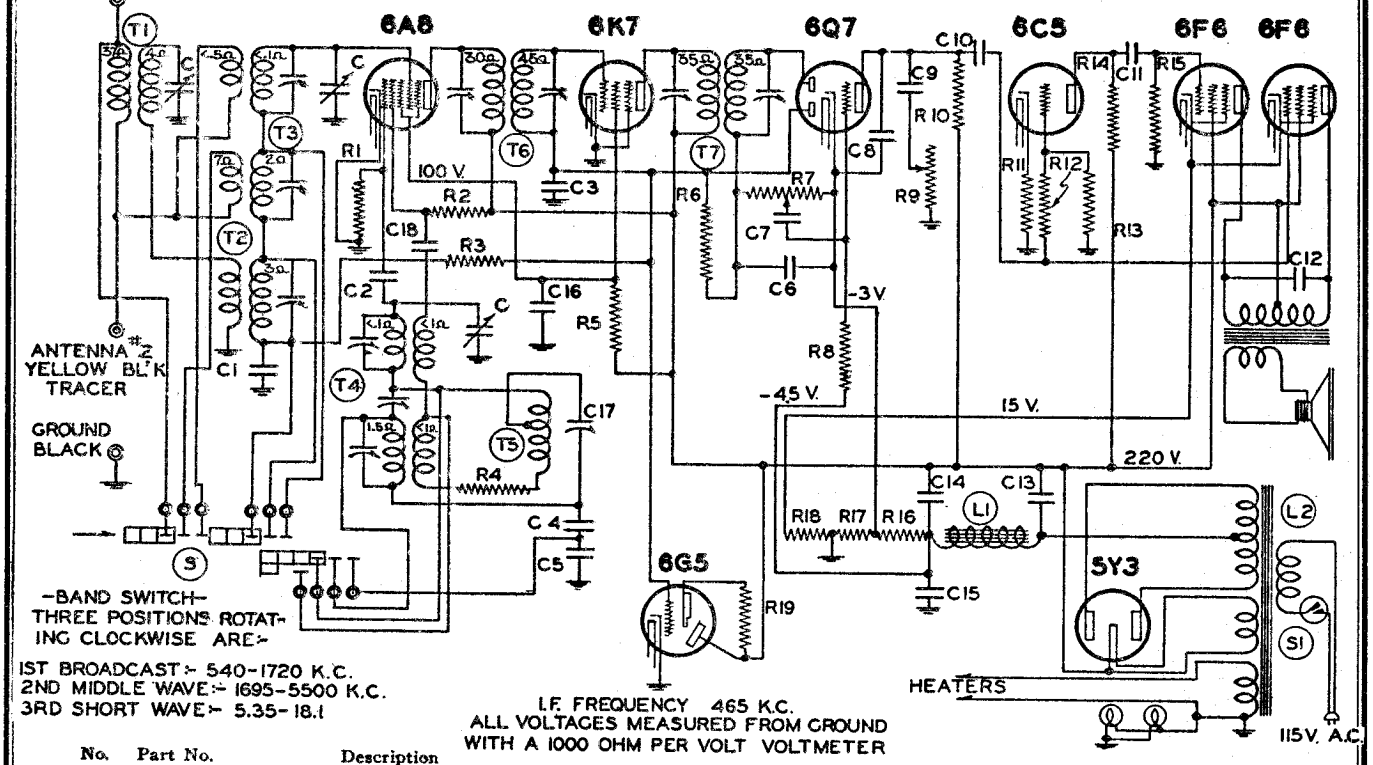

No.	Part No.	Description
		RESISTORS
R1	130-12	50M ohms - 1/3 w.
R2	130-48	15M ohms - 1/3 w.
R3	130-103	100M ohms - 1/3 w.
R4	130-27	50 ohms - 1/3 w.
R5	130-96	25M ohms - 1/2 w.
R6	130-4	3 megohm - 1/3 w.
R7	101-74	1 megohm - Volume Control
R8	130-4	3 megohm - 1/3 w.
R9	101-75	300M ohms - Tone Control
R10	130-103	100M ohms - 1/3 w.
R11	130-22	5M ohms - 1/3 w.
R12	130-163	400M ohms - 1/3 w.
R13	130-103	100M ohms - 1/3 w.
R14	130-12	50M ohms - 1/3 w.
R15	130-100	150M ohms - 1/3 w.
R16	106-37	20 ohms - Muter
R17	106-37	42 ohms - Muter
R18	106-37	250 ohms - Muter
R19	130-110	1 megohm - 1/10 w.

NOTE: R16, R17 and R18 in one unit, No. 106-37

		CONDENSERS
C1	100-22	.05 x 200 v.
C2	129-39	.00005 Mica
C3	100-22	.05 x 200 v.
C4	129-55	.0034 Mica
C5	129-54	.003 Mica
C6	129-5	.0001 Mica
C7	100-11	.01 x 400 v.
C8	129-2	.0005 Mica
C9	100-57	.006 x 600 v.
C10	100-26	.02 x 400 v.
C11	100-26	.02 x 400 v.
C12	100-12	.003 x 600 v.
C13	103-6	8 mfd. x 350 v.
C14	103-14	16 mfd. x 250 v.
C15	100-20	.1 x 200 v.
C16	100-39	.1 x 400 v.
C17	124-35	Adjustable Padder - Working Capacity 740 mmf.
C18	100-12	.003 x 600 v.

		PARTS
C	102-47	One section of three gang condenser
T1	111-51	B.C. Pre-Selector
T2	111-49	B.C. Antenna Coil Assembly
T3	111-50	MW - SW Antenna Coil Assembly
T4	110-39	MW - SW Oscillator Coil Assembly
T5	110-55	B.C. Oscillator Coil Assembly
T6	108-105	Input I.F. - 465 kc.
T7	108-106	Output I.F. - 465 kc.
L1	114-66	6" Speaker (Field Resistance 900 ohms)
L2	104-87	Power Transformer (60 cycle) 115 volts
S	125-17	Band Switch
S1	101-74	On-off Switch on volume control.

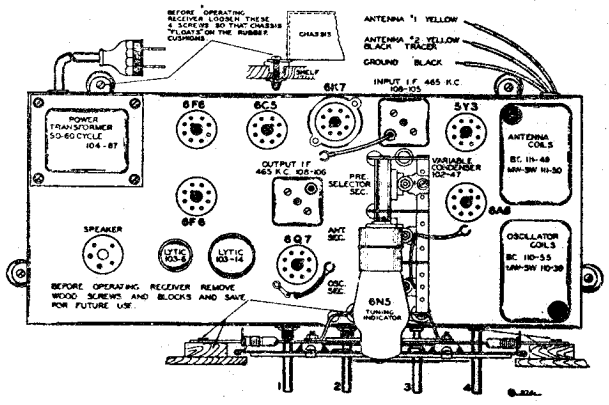

Vol. Control On-Off Switch | Tone Control | Tuning Control | Band Switch

FIG. 1—TOP VIEW

MODEL D699

FACTORY NO. 849

©John F. Rider, Publisher

©John F. Rider, Publisher

Factory Number 840

8 Tube Including Cathode-Ray Tuning Indicator

3-Band All-Wave A.C. Superheterodyne Receiver

INSTRUCTIONS FOR INSTALLING, OPERATING AND SERVICING

BAND	DIAL SCALE	FREQUENCY RANGE
Broadcast	Outer Scale	540 to 1720 K.C. (Kilocycles)
Middle Wave	Center Scale	1690 to 5500 K.C. (Kilocycles)
Short Wave	Inner Scale	5.35 to 18.1 M.C. (Megacycles)

I. F. Frequency 465 K.C.

DESCRIPTION:

The tube complement of this chassis consists of the following metal and octal base glass tubes which are interchangeable with metal tubes:

1—Type 6A8G—Pentagrid mixer, first detector and oscillator.
1—Type 6K7 Remote cut-off pentode I.F. amplifier (465 K.C.)
1—Type 6Q7G duplex diode triode second detector, A.V.C. and audio.
1—Type 6C5 Inverter stage.
2—Type 6F6G—pentode push-pull output amplifier.
1—Type 5Y3G high vacuum rectifier.
1—Type 6G5 Cathode ray tuning indicator.

Transformers are available and chassis are sometimes equipped with universal transformers for operation on 25, 40 and 60 cycles and with primary taps for 108, 127, 150, 225, and 260 volts, (see instructions) and also sometimes equipped with 25 cycle transformers with 105-115 volt or 220 volt primaries, not universals.

SERVICE NOTES:

Voltages taken from different points of circuit to chassis are measured with volume control full on, all tubes in their sockets and speaker connected, with a volt meter having a resistance of 1000 ohms per volt. **These voltages are clearly indicated on the circuit diagram.**

IN ORDER TO PREVENT SIGNAL FROM ACTING UPON AVC AND AFFECTING ACCURACY OF VOLTAGE MEASUREMENTS, AERIAL AND GROUND LEADS SHOULD BE SHORT CIRCUITED WHILE MAKING MEASUREMENTS.

All voltages are to measured with 115 volts on the primary of the power transformer.

Resistances of coils and transformer windings are indicated in ohms on schematic circuit diagrams.

To check for open by-pass condensers, shunt each condenser with another condenser of the same capacity and voltage rating, which is known to be good, until the defective unit is located.

Excessive hum, stuttering, low volume and a reduction in all D.C. voltages is usually caused by a shorted electrolytic condenser, open by-pass condensers frequently cause oscillation and distorted tone.

ALIGNING INSTRUCTIONS:

CAUTION: No aligning adjusments should be attempted without first thoroughly checking over all other possible causes of trouble, such as defective tubes, poor installations, open or grounded antenna systems, defective condensers and resistors.

In order to properly align this chassis, an oscillator (generator) is necessary.

All adjustments should be made with a non-metallic screw driver.

CATHODE-RAY TUNING INDICATOR:

A cathode-ray tube is used for visually indicating when the receiver is accurately tuned to the incoming signal. The signal from the receiver is applied to the tube in such a manner as to cause a triangular shadow on the luminescent screen. The size of the shadow is determined by the strength of the incoming signal so that a change of tuning is readily exhibited on the cathode-ray screen, and therefore tuning to exact resonance can be definitely obtained.

The cathode-ray screen shows the dark sector (shadow) in the middle portion of the illuminated area at its minimum width when ideal tuning position (resonance) is attained for any particular station (see dotted lines on illustration of cathode-ray tuning indicator. (Fig. 2, Page 2.)

TUNING:

Set Band changing switch to the band desired, turn volume control to the right approximately three-quarters of its rotation, turn tuning knob slowly until a signal is heard, then turn slowly back and forth, noting the width of the shadow indicated on the screen of the Cathode-Ray Tuning Indicator. **Minimum width indicates the ideal tuning position (resonance).**

NOTE: Tuning on the short wave band is very critical. The tuning knob has been provided with a vernier mechanism to assist in tuning. The knob should be turned very slowly as the pointer passes over the shaded sections of the short wave band scale. A signal of suitable strength could easily be passed if tuned through in a rapid or haphazard manner.

The operation of this receiver is like that of any conventional receiver, with the exception that greater care must be exercised when tuning on the short wave band. It is also desirable that the user have a practical knowledge of the operating schedules and time differences of the broadcasting stations. A short wave map is included with your radio for your convenience.

Reception on the short wave band is often affected by interference from telephones, electrical appliances, automobile motors, oil burners, etc.

A GOOD ANTENNA IS ESSENTIAL FOR SATISFACTORY RECEPTION ON SHORT WAVES.

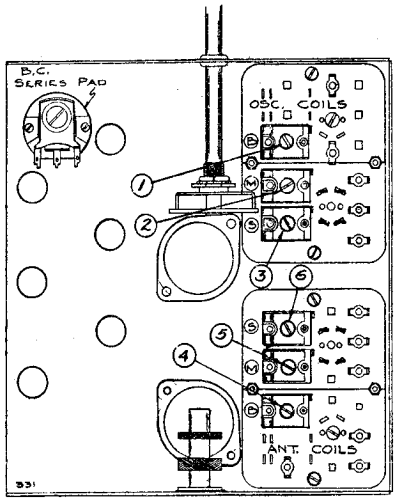

FIG. 3.—BOTTOM VIEW SHOWING TRIMMERS

RESONANCE INDICATOR:

Use as a resonance indicator an output meter connected across the primary of the speaker input transformer or by means of an adapter between the plate and cathode terminals of the 5 prong speaker socket. Maximum deflection of the meter indicates resonance. Use only enough signal to get a readily readable output. A low range output meter or the low scale of a multi-range meter should be used.

DUMMY ANTENNAS:

The following dummy antennas are used in aligning and are referred to in the following alignment instructions as "Dummy 1", "Dummy 2", and "Dummy 3".

Dummy 1: (I.F.)—Consists of a .1 mfd. condenser connected in series with the external oscillator.

Dummy 2: (Broadcast)—Consists of a 200 mmfd. condenser and a 20 ohm resistor connected in series with each other and in series with the external oscillator.

Dummy 3: (Middle and Short Wave)—Consists of a .1 mfd. condenser and a 400 ohm resistor connected in series with each other and in series with the external oscillator.

ALIGNING I.F. TRANSFORMERS: (465 K.C.):

Part No. 108-106 Output I.F. Transformer
Part No. 108-105 Input I.F Transformer

These I.F. transformers have two adjustments, both of which are accessible from the top of chassis (see top view).

1. With volume control full on, (the extreme right of its rotation), the band changing switch in the broadcast position, (extreme left of its rotation), and with the variable condenser set to approximately 1400 kilocycles, make the following adjustments:
   (a) Connect external oscillator set at 465 kilocycles, in series with "Dummy 1", to the control grid cap of the type 6K7 tube, and adjust the output I.F. transformer (No. 108-106) to resonance.
   (b) With "Dummy 1" still connected, move oscillator output clip from grid of 6K7 to grid cap of 6A8G and adjust input I.F. transformer (No. 108-105) to resonance

BROADCAST BAND ALIGNMENT:

540 to 1720 Kilocycles

1. With band changing switch in the broadcast position, extreme left of its rotation, and with gang condenser in its minimum capacity position, plates entirely out of mesh, and with external oscillator connected in series with "Dummy 2" to tan antenna lead and black ground lead, make following adjustments:
   (a) Set external oscillator to 1720 K.C. and adjust broadcast oscillator trimmer to resonance (adjustment number 1; see bottom view of coil assembly. Fig. 3.)
   (b) Re-set external oscillator to 1550 K.C., rotate variable gang condenser and pick up signal. Adjust broadcast antenna trimmer (Adjustment number 4) to resonance; also adjust preselector trimmer which is mounted on the top of the rear section of the three gang variable tuning condenser to resonance. (See top view of chassis, Fig. 1, for location of this adjustment.)
   (c) Re-set external oscillator to 600 K.C., and adjust broadcast series pad to resonance by rotating condenser to approximately 600 K.C., rocking it slowly to and fro until by adjusting series pad maximum output is attained. This adjustment is located on the bottom of the chassis directly under the variable gang condenser. (See bottom view of chassis, Fig. 3.)
   (d) Repeat adjustments "a" and "b" until sensitivity is at its maximum.
   (e) Check for tracking and sensitivity at 1000 kilocycles. **Under no circumstances bend plates of variable condenser sections to correct tracking.**

SHORT WAVE BAND ALIGNMENT:

5.35 to 18.1 Megacycles

1. With band changing switch in the short wave position, extreme right of its rotation, and with external oscillator set at 17 megacycles and connected in series with "Dummy 3" to the tan antenna and black ground lead, make the following adjustments:
   (a) Move dial pointer to 17 megacycles and adjust short wave oscillator (Adjustment number 3) and short wave antenna (Adjustment number 6) to resonance.
   (b) Re-set external oscillator to 6 megacycles and pick up signal by rotating variable condenser and check sensitivity.
   (c) Re-set external oscillator and check set at 18.1 megacycles and 5.3 megacycles for band coverage.

NOTE: It is extremely necessary in making all of these adjustments that the fundamental oscillator signal be tuned in and not the image frequency which will fall below the fundamental. An example of this is an image of a fundamental 18.3 megacycle signal appears near 17.4 megacycles.

MIDDLE WAVE BAND ALIGNMENT:

1690 to 5500 Kilocycles

1. With band changing switch in the middle wave position, center of its rotation, and with external oscillator set at 5000 kilocycles and connected in series with "Dummy 3" to the tan antenna and black ground lead, make the following adjustments:
   (a) Move dial pointer to 5000 kilocycles and adjust middle wave oscillator (Adjustment number 2) and middle wave antenna (Adjustment number 5) to resonance.
   (b) Re-set external oscillator to 1800 kilocycles and pick up signal by rotating variable condenser and check sensitivity.
   (c) Re-set external oscillator and check set at 5400 kilocycles and 1700 kilocycles for band coverage.
   (d) Recheck broadcast band alignment.

Voltage, Trimmers
Parts List

WESTERN AUTO SUPPLY CO.

MODEL D 706
Schematic, Socket

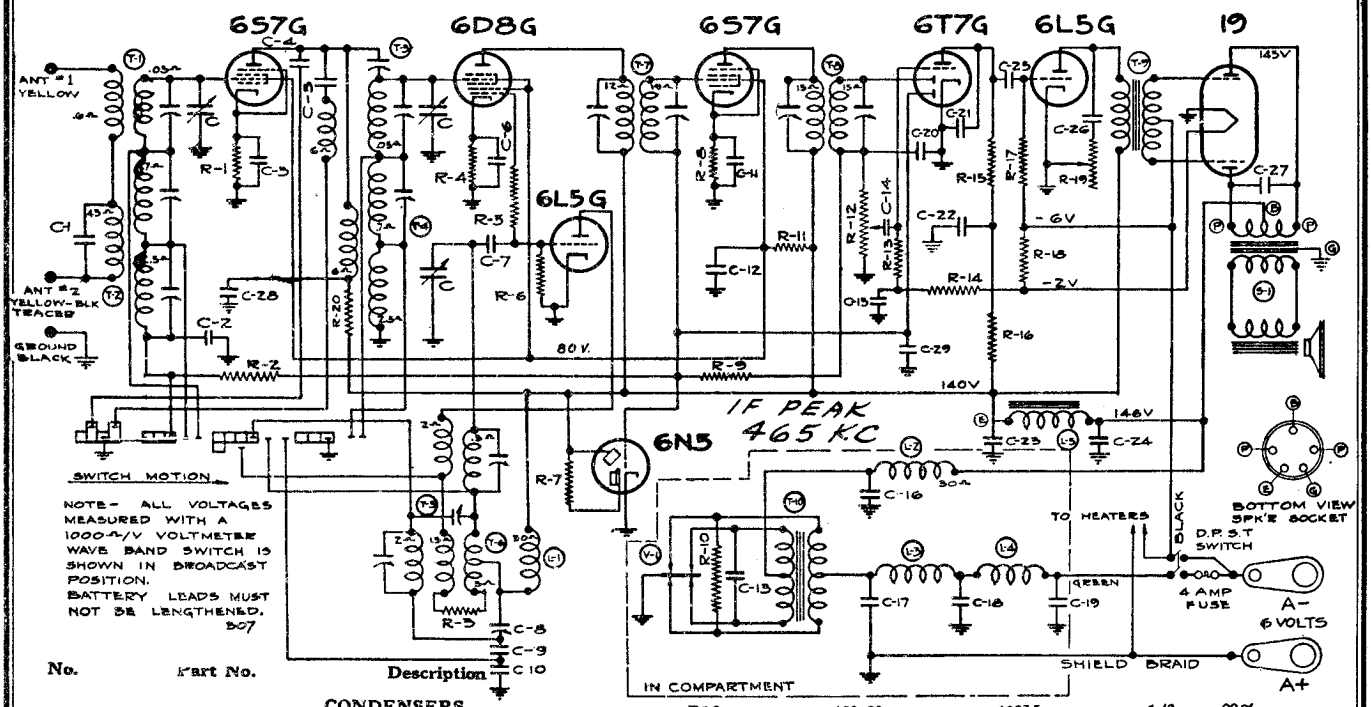

No.	Part No.	Description
		CONDENSERS
C	102-40	Variable Condenser
C1	129-5	.0001 Mica—MO—O—20%
C2	100-9	.05 x 200 v.—25%
C3	100-9	.05 x 200 v.—25%
C4	129-72	.0004 Mica—MT—W—5%
C5	129-38	.00005 Mica—MO—O—10%
C6	100-9	.05 x 200 v.—25%
C7	129-38	.00005 Mica—MO—O—10%
C8	124-35	J.S. Series Pad
C9	129-70	.004 Mica MW—J—2½%
C10	129-71	.002—Mica MW—W—2½%
C11	100-20	.1 x 200v.—25%
C12	100-20	.1 x 200v.—25%
C13	100-34	.005 x 1200 v.—10%
C14	100-11	.01 x 400 v.—25%
C15	100-11	.01 x 400 v.—25%
C16	100-14	.1 x 200 v.—25%
C17	100-56	.5 x 200 v.—50%—10%
C18	100-56	.5 x 200 v.—50%—10%
C19	100-25	.002 x 600 v.—25%
C20	129-5	.0001 Mica MO—O—20%
C21	129-2	.0005 Mica MT—O—20%
C22	100-20	.1 x 200 v.—25%
C23	119-32	4. mfd. 200 w. v. Lytic
C24	119-32	8. mfd. 200 w. v. Lytic
C25	100-11	.01 x 400 v.—25%
C26	100-26	.02 x 400 v.—25%
C27	100-25	.002 x 600 v.—25%
C28	100-50	.25 x 200 v.—20%
C29	100-22	.05 x 200 v.—25%
		RESISTORS
R1	130-140	1200 ohm 1/3 w.—20%
R2	130-20	100M 1/3 w.—20%
R3	130-27	50 1/3 w.—20%
R4	130-54	500 ohm 1/3 w.—20%
R5	130-27	50 1/3 w.—20%
R6	130-2	75 M 1/3 w.—20%
R7		½ meg (in m. e. socket)
R8	130-140	1200 ohm 1/3 w.—20%
R9	130-38	2 meg 1/3 w.—20%
R10	130-84	200 ohm 1/3 w.—20%
R11	130-157	12M ½ w.—10%
R12	101-66	500M Volume Control
R13	130-19	1 meg 1/3 w.—20%
R14	130-19	1 meg 1/3 w.—20%
R15	130-20	100M 1/3 w.—20%
R16	130-20	100M 1/3 w.—20%
R17	130-4	3 meg 1/3 w.—20%
R18	130-158	16 ohm 1 w.—Insulated
R19	101-67	100M Tone Control
R20	130-85	3 M 1/3 w.—20%
		PARTS
T1	111-67	S.W. M.W. Ant. Coil
T2	111-68	B.C. Antenna Coil
T3	109-32	S.W. M. W. R.F. Coil
T4	109-33	B.C. R.F. Coil
T5	110-53	S.W. M.W. Osc. Coil
T6	110-55	B.C. Osc. Coil
T7	108-93	Input I.F. Coil
T8	108-92	Output I.F. Coil
T9	105-36	Audio Input Transformer
T10	104-81	Power Transformer
S1	114-64	P.M. Dynamic Spkr. 8"
L-1	123-3	Osc. "B" Choke
L-2	123-3	R.F. "B" Choke
L-3	105-19	"A" Choke
L-4	105-19	"A" Choke
L-5	105-30	"B" Filter Choke
V-1	126-4	Vibrator

FIG. 1—TOP VIEW

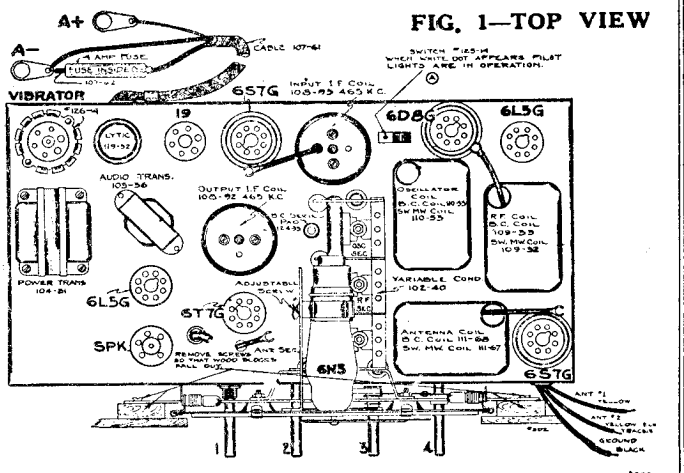

©John F. Rider, Publisher

©John F. Rider, Publisher

Factory Number 804

8 Tube Including Cathode-Ray Tuning Indicator

3-Band All-Wave 6-Volt Battery Superheterodyne Receiver

INSTRUCTIONS FOR INSTALLING, OPERATING AND SERVICING

BAND	DIAL SCALE	FREQUENCY RANGE
Broadcast	Outer Scale	540 to 1720 K.C. (Kilocycles)
Middle Wave	Center Scale	1690 to 5500 K.C. (Kilocycles)
Short Wave	Inner Scale	5.35 to 18.1 M.C. (Megacycles)

I. F. Frequency 465 K.C.

CATHODE-RAY TUNING INDICATOR

A cathode-ray tube is used for visually indicating when the receiver is accurately tuned to the incoming signal. The signal from the receiver is applied to the tube in such a manner as to cause a triangular shadow on the luminescent screen. The size of the shadow is determined by the strength of the incoming signal so that a change of tuning is readily exhibited on the cathode-ray screen, and therefore tuning to exact resonance can be definitely obtained.

The cathode-ray screen shows the dark sector (shadow) in the middle portion of the illuminated area at its minimum width when ideal tuning position (resonance) is attained for any particular station (see dotted lines on illustration of cathode-ray tuning indicator. (Fig. 2, Page 2.)

TUNING:

Set Band changing switch to the band desired, turn volume control to the right approximately three-quarters of its rotation, turn tuning knob slowly until a signal is heard, then turn slowly back and forth, noting the width of the shadow indicated on the screen of the Cathode-Ray Tuning Indicator. Minimum width indicates the ideal tuning position (resonance).

NOTE: Tuning on the short wave band is very critical. The tuning knob has been provided with a vernier mechanism to assist in tuning. The knob should be turned very slowly as the pointer passes over the shaded sections of the short wave band scale. A signal of suitable strength could easily be passed if tuned through in a rapid or haphazard manner.

The operation of this receiver is like that of any conventional receiver, with the exception that greater care must be exercised when tuning on the short wave band. It is also desirable that the user have a practical knowledge of the operating schedules and time differences of the broadcasting stations. A short wave map is included with your radio for your convenience.

Reception on the short wave band is often affected by interference from telephones, electrical appliances, automobile motors, oil burners, etc.

A GOOD ANTENNA IS ESSENTIAL FOR SATISFACTORY RECEPTION ON SHORT WAVES.

ANTENNA AND GROUND LEADS:

You will notice three wires coming out of the back of the chassis, — the **yellow** wire and the **black with yellow tracer** wire are used for doublet antenna connections. The **black** wire is the ground connection.

For conventional types of antennas connect the **yellow** wire to the antenna lead and the **yellow with black tracer** and the **black** wire together to the ground lead.

When a doublet antenna is used connect the **yellow wire** and the **yellow with black tracer** wire to the doublet antenna and the solid **black** wire to the groud lead. (See Fig. 1—Top View,

DESCRIPTION:

TUBES:

The tube complement of this chassis consists of the following octal base glass tubes which are interchangeable with metal tubes.

The type and function of each tube is as follows:

1—Type 6S7G Remote cut-off pentode R.F. amplifier.
1—Type 6D8G Pentagrid first detector.
1—Type 6L5G Oscillator.
1—Type 6S7G Remote cut-off pentode I.F. amplifier (465 K.C.)
1—Type 6T7G duplex diode triode second detector, A.V.C. and audio.
1—Type 6L5G Driver Amplifier.
1—Type 19 Class "B" Push-Pull Output Amplifier.
1—Type 6N5 Cathode Ray Tuning Indicator.

SERVICE NOTES:

Voltages taken from different points of circuit to chassis are measured with volume control full on, all tubes in their sockets and speaker connected, with a volt meter having a resistance of 1000 ohms per volt. These voltages are clearly indicated on the circuit diagram.

In order to prevent signal from acting upon A.V.C. and affecting accuracy of voltage measurements, aerial and ground leads should be short circuited while making measurements.

All voltages are to be measured with 6.3 volts input to receiver. Resistances of coils and transformer windings are indicated in ohms on the schematic circuit diagram.

To check for open by-pass condensers, shunt each condenser with another condenser of the same capacity and voltage rating, which is known to be good, until the defective unit is located.

Failure to operate, noisy or weak reception is usually due to defective tubes, the tubes making poor contact with sockets or grid clips making poor contact with the caps of the tubes. Tubes may be checked very easily by replacing with other tubes which are known to be good. Do not attempt to make any adjustments on the vibrator.

ALIGNING INSTRUCTIONS:

CAUTION: No aligning adjustments should be attempted without first thoroughly checking over all other possible causes of trouble, such as run down battery, defective tubes, poor installations, open or grounded antenna systems, defective condensers and resistors.

In order to properly align this chassis, an oscillator (generator) is necessary.

All adjustments should be made with a non-metallic screw driver.

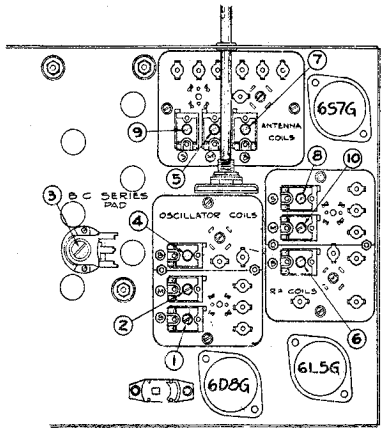

FIG. 3.—BOTTOM VIEW SHOWING TRIMMERS

RESONANCE INDICATOR:

Use as a resonance indicator an output meter connected across the primary of the speaker input transformer, or by means of an adapter between the two plate terminals of the type 19 output tube. Maximum deflection of the meter indicates resonance. Use only enough signal to get a readily readable output. A low range output meter or the low scale of a multi-range meter should be used.

DUMMY ANTENNAS:

The following dummy antennas are used in aligning and are referred to in the following alignment instructions as "Dummy 1", "Dummy 2", and "Dummy 3".

Dummy 1: (I.F.)—Consists of a .1 mfd. condenser connected in series with the external oscillator.

Dummy 2: (Broadcast)—Consists of a 200 mmfd. condenser and a 20 ohm resistor connected in series with each other and in series with the external oscillator.

Dummy 3: (Middle and Short Wave)—Consists of a .1 mfd. condenser and a 400 ohm resistor connected in series with each other and in series with the external oscillator.

ALIGNING I.F. TRANSFORMERS: (465 K.C.):

Part No. 108-92 Output I.F. Transformer
Part No. 108-93 Input I.F. Transformer

These I.F. transformers have two adjustments, both of which are accessible from the top of chassis (see top view).

1. With volume control full on, (the extreme right of its rotation), the band changing switch in the broadcast position, (extreme left of its rotation), and with the variable condenser set to approximately 1400 kilocycles, make the following adjustments:
   (a) Connect external oscillator set at 465 kilocycles, in series with "Dummy 1", to the control grid cap of the type 6S7G tube, and adjust the output I.F. transformer (No. 108-92) to resonance.
   (b) With "Dummy 1" still connected, move oscillator output clip from grid of 6S7G to grid cap to 6D8G and adjust input I.F. transformer (No. 108-93) to resonance.

SHORT WAVE BAND ALIGNMENT:

5.35 to 18.1 Megacycles

1. With band changing switch in the short wave position, extreme right of its rotation, and with external oscillator set at 18 megacycles and connected in series with "Dummy 3" to the antenna and ground posts, make the following adjustments:
   (a) Move dial pointer to 18 megacycles and adjust short wave oscillator trimmer (adjustment number 1) to resonance.
   (b) Re-set external oscillator to 17 megacycles and pick up signal by rotating variable condenser and adjust short wave R.F. trimmer (adjustment number 8), and short wave antenna trimmer (adjustment number 9), to resonance.
   (c) Re-set external oscillator and check set at 18.1 megacycles and 6 megacycles for band coverage and sensitivity.

NOTE: It is extremely necessary in making all of these adjustments that the fundamental oscillator signal be tuned in and not the image frequency which will fall below the fundamental on the receiver dial. As an example of this a fundamental 18.3 megacycle signal can be tuned in not only at 18.3 on the dial but also at approximately 17.4 megacycles.

MIDDLE WAVE BAND ALIGNMENT:

1690 to 5500 Kilocycles

1. With band changing switch in the middle wave position, center of its rotation, and with external oscillator set at 5.5 megacycles and connected in series with "Dummy 3" to the antenna and ground posts make the following adjustments:
   (a) Move dial pointer to 5.5 megacycles and adjust middle wave oscillator trimmer (adjustment number 2) to resonance.
   (b) Re-set external oscillator to 5 megacycles and pick up signal by rotating variable condenser and adjust middle wave R.F. trimmer (adjustment number 10), and middle wave antenna trimmer (adjustment number 5), to resonance.
   (c) Re-set external oscillator and check sensitivity at 1700 kilocycles.

BROADCAST BAND ALIGNMENT:

540 to 1720 Kilocycles

1. With band changing switch in the broadcast position, extreme left of its rotation, and with gang condenser in its minimum capacity position, plates entirely out of mesh, and with external oscillator connected in series with "Dummy 2" to antenna and ground posts, make following adjustments:
   (a) Set external oscillator to 1720 K.C. and adjust broadcast oscillator trimmer to resonance. (Adjustment number 4; see bottom view of coil assembly, Fig. 3)
   (b) Re-set external oscillator to 1400 K.C., rotate variable gang condenser and pick up signal. Adjust broadcast R.F. trimmer (adjustment number 6) and broadcast antenna trmmer (adjustment number 7), to resonance.
   (c) Re-set external oscillator to 600 K.C., and adjust broadcast series pad (adjustment number 3), to resonance by rotating condenser to approximately 600 K.C., rocking it slowly to and fro until by adjusting series pad maximum output is attained. This adjustment is located on the bottom of the chassis directly under the variable gang condenser. (See bottom view of chassis, Fig. 3).
   (d) Repeat adjustments "a" and "b" until sensitivity is at its maximum.
   (e) Check for tracking and sensitivity at 1400, 1000, and 600 kilocycles. **Under no circumstances bend plates of variable condenser sections to correct tracking.**

WESTERN AUTO SUPPLY CO.

MODEL D 734
Schematic, Socket
Voltage, Trimmers
Parts List

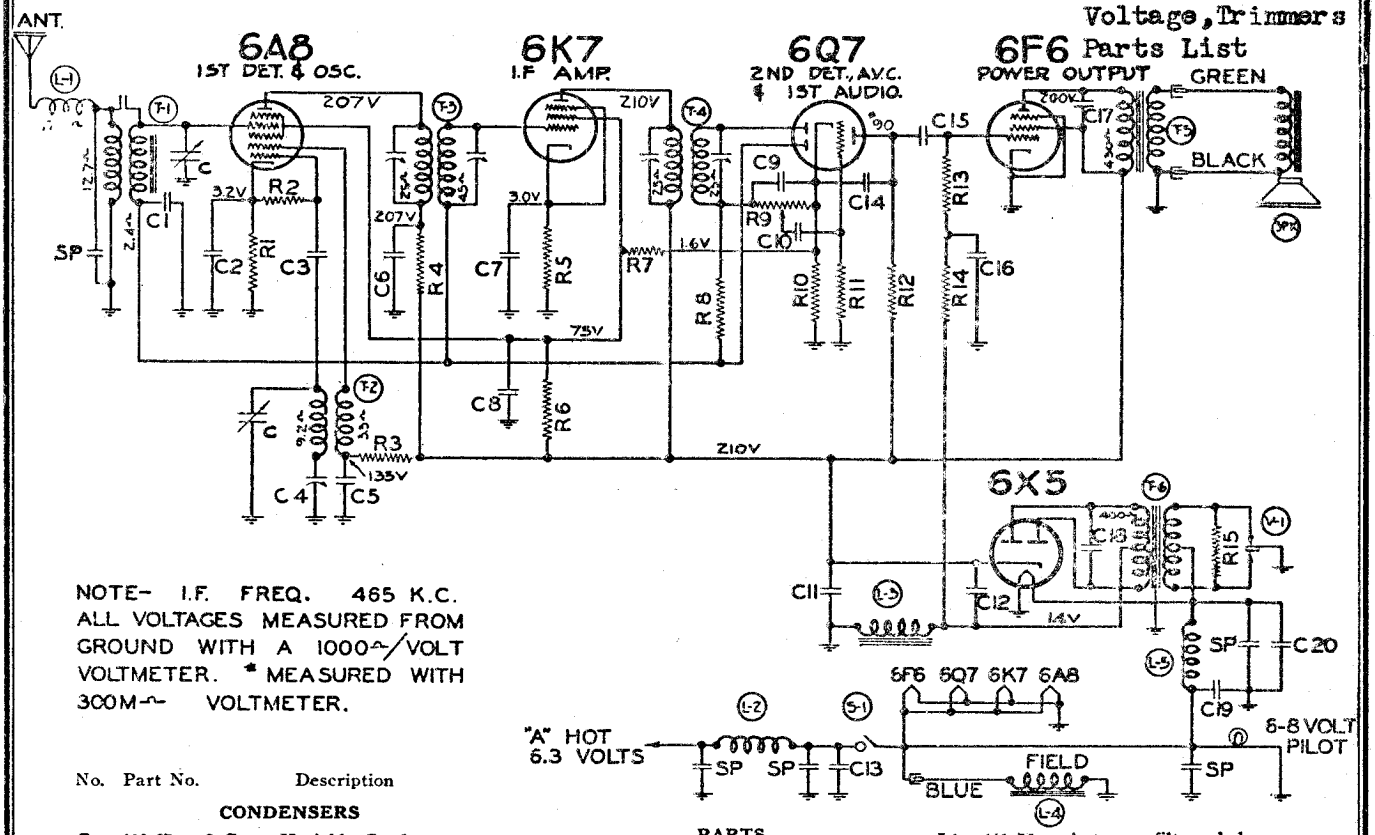

NOTE- I.F. FREQ. 465 K.C.
ALL VOLTAGES MEASURED FROM GROUND WITH A 1000~/VOLT VOLTMETER. * MEASURED WITH 300M~ VOLTMETER.

No.	Part No.	Description
		CONDENSERS
C	102-27	2 Gang Variable Condenser
C1	100-59	.05 x 200 25%
C2	116-21	.05 x 200 (Yellow lead) 20%
C3	129-12	.00025 Mica 20%
C4	124-37	Series Pad 350 mmf. w. v.
C5	116-21	.1 x 400 (Red lead) 20%
C6	116-21	.1 x 400 (Green lead) 20%
C7	116-21	.05 x 200 (Black lead) 20%
C8	100-60	.25 x 200 25%
C9	129-12	.00025 Mica 20%
C10	100-55	.01 x 400 25%
C11	119-33	8 mfd. Lytic 300 w. v.
C12	119-33	4 mfd. Lytic 300 w. v.
C13	100-31	.5 x 120 10 - 50%
C14	129-5	.0001 Ceramicon 20%
C15	100-11	.01 x 400 25%
C16	100-60	.25 x 200 25%
C17	100-54	.006 x 600 v. 25%
C18	100-58	.005 x 1200 - 20 - 10%
C19	100-31	.5 x 120 10 - 50%
C20	100-31	.5 x 120 10 - 50%
		4 Spark Plates
		C2, C5, C6 and C7 in same block
		C11, C12 in same block
		C8, C16 in same block
		RESISTORS
R1	103-54	500 ohm—1/3 w.—20%
R2	130-162	50M ohm—1/3 w.—20%
R3	130-164	30M ohm—½ w.—20%
R4	130-137	1500 ohm—1/3 w.—20%
R5	130-24	400 ohm—1/3 w.—20%
R6	130-30	25M ohm—1 w.—20%
R7	130-139	40M ohm—1/3 w.—20%
R8	130-142	1 meg ohm—1/3 w.—20%
R9	101-41	500 M ohm Volume Control
R10	130-153	700 ohm—1/3 w.—20%
R11	130-19	1 meg ohm—1/3 w.—20%
R12	130-141	250M ohm—1/3 w.—20%
R13	130-5	300M ohm—1/3 w.—20%
R14	130-11	250M ohm—1/3 w.—20%
R15	130-84	200 ohm—1/3 w.—20%

PARTS

T1	111-70	Antenna Coil Complete
T2	110-57	Oscillator Coil Complete
T3	108-96	Input I.F. Complete
T4	108-95	Output I.F. Complete
T5	105-37	Output Transformer
T6	104-82	Power Transformer
L1	111-76	Antenna filter choke
L2	105-26	"A" Choke
L3	105-39	"B" Filter choke (335 ohms)
L4	114-59	Speaker field—4 ohm
L5	105-19	"A" Choke
Spkr.	114-59	Speaker
S1		Switch on Volume Control
V1	126-1	Vibrator

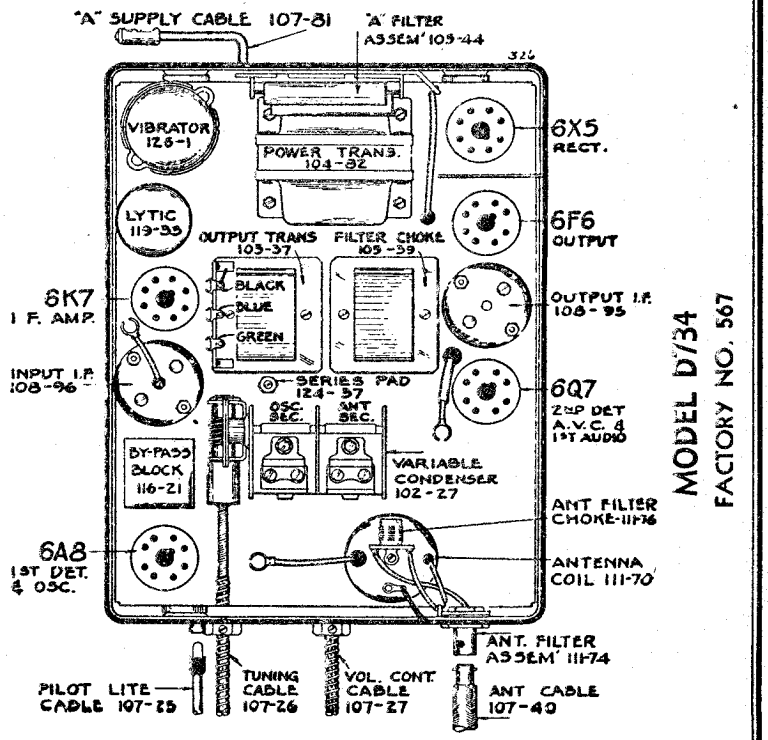

FIG. 2.—TOP VIEW

©John F. Rider, Publisher

©John F. Rider, Publisher

DESCRIPTION

Model No. 567 is a five-tube superheterodyne receiver having a tuning range of 530 K.C. to 1550 K.C., operates from a 6.0 volt storage battery and uses the automotive type 6.3 volt tubes. The "B" supply is obtained from a vibrator with a tube rectifier.

The I.F. frequency used is 465 K.C., the R.F. end of the receiver consisting of a high gain iron core antenna coil which gives high signal to noise ratio. The I.F. transformers are designed to give high gain and selectivity and yet to have a broad nose for ease of tuning and hi-fidelity response. They are of the air core type and wound with solid wire to give *minimum* drift and variation of gain due to climatic changes.

This receiver has been carefully designed to facilitate servicing, the top and bottom covers are both removable and are fastened in place by spring clips, self tapping screws and trimount buttons.

All adjustments are accessible and any part replaceable without removing the chassis from the case.

TUBE COMPLEMENT

The tube complement of this chassis consists of the following octal base glass and metal tubes which are interchangeable with metal tubes.

1—Type No. 6A8 Pentagrid Converter (composite first detector and oscillator)
1—Type No. 6K7—Remote Cut-off Pentode as an I.F. Amplifier (465 K.C.)
1—Type No. 6Q7—Duplex Diode Triode Second Detector, A.V.C. and First Audio
1—Type No. 6F6—Pentode Output Amplifier
1—Type No. 6X5—High Vacuum Rectifier.

ANTENNA CONNECTION

Insert the antenna plug in cable into the chassis. The wire at the other end of the antenna cable is connected to the lead-in wire from the antenna. Keep the antenna cable as far away from car wiring as possible and ground the pigtail of the antenna cable shield at the antenna end.

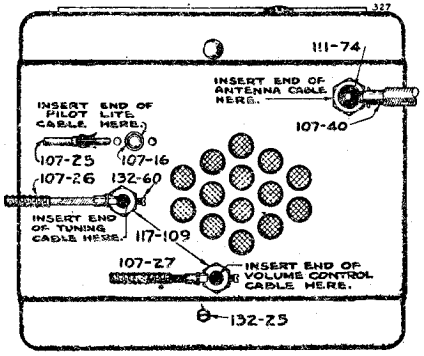

FIG. 1—SIDE VIEW

A 24 inch shielded antenna cable is regularly supplied. If a roof antenna is used, this cable will be long enough in practically all cases to reach the corner post or column at which the antenna lead comes down. The shielded cable should be pushed up into the column as far as possible. The reason for this is that ignition interference may be picked up by any unshielded portion of the antenna cable.

If an under car or running board antenna is used, the shielding must be extended to the antenna in all cases. The pigtail on the end of the antenna cable shield must be well grounded at the extreme antenna end. If it is necessary to extend the antenna cable shielding as described on following page, be sure that a pigtail is put on the end of the shielded extension and that it is well grounded at the extreme antenna end.

To extend the antenna cable shielding, the antenna lead wire should be covered with heavy insulation, such as loom, to properly separate the shielding from the wire. Then connect the two wires together and connect the two shields together, care being taken that no strand of the shield touches the antenna wire.

Aerials suitable for steel roof and convertible cars can be purchased from your dealer. They should be mounted as far to the rear of the car as possible.

The majority of 1937 cars have steel roofs, and a running board or other type car antenna must be used. The 1936 Chrysler Motors cars (except Plymouth—but including Chrysler, Dodge and DeSoto) have a steel roof separated from the body proper, which is used as an antenna. Other cars without steel roofs such as Ford and Plymouth have a built-in roof antenna.

SERVICE NOTES

Voltages taken from different points of circuit to chassis are measured with volume control full on, all tubes in their sockets and speaker connected, with a volt meter having a resistance of 1000 ohms per volt. These voltages are clearly indicated on the circuit diagram.

In order to prevent signal from acting upon A.V.C. and affecting accuracy of voltage measurements, aerial and ground leads should be short circuited while making measurements.

All voltages are to be measured with 6.3 volts input to receiver. Resistances of coils and transformer windings are indicated in ohms on schematic circuit diagram.

To check for open by-pass condensers, shunt each condenser with another condenser of the same capacity and voltage rating, which is known to be good, until the defective unit is located.

Failure to operate, noisy or weak reception is usually due to defective tubes, the tubes making poor contact with sockets or grid clips making poor contact with the caps of the tubes. Tubes may be checked very easily by replacing with other tubes which are known to be good. If fuse blows out frequently and insulating sleeve has been properly placed over fuse, the trouble is probably in the vibrator, it should be replaced. Do not attempt to make any adjustments on the vibrators.

ALIGNING INSTRUCTIONS

All of the adjustments have been very carefully set with signal generators at the factory and require no further adjustment, unless it becomes necessary to replace a coil or transformer, or if the adjustments have been tampered with in the field. Under no circumstances attempt any adjustments without first making certain that adjustment is necessary and only after voltages, tubes and condensers have been checked and found to be normal. To properly re-align this receiver a test oscillator, as well as an output meter, must be used.

DUMMY ANTENNAS

The dummy antennas referred to in the following instructions are:

"I.F. Dummy" —A .5 mfd. condenser connected in series with the test oscillator output lead.

"Broadcast Dummy"—A 175 mmfd. condenser connected in series with the output lead of the test oscillator.

RESONANCE INDICATOR

Use as a resonance indicator an output meter connected across the primary of the speaker input transformer, or by means of an adapter between the plate and screen terminals of the type 6F6 output tube. Maximum deflection of the meter indicates resonance. Use only enough signal to get a readily readable output. A low range output meter or the low scale of a multi-range meter should be used.

I.F. ALIGNMENT: (465 K.C.)

1. With variable condenser in its minimum capacity position (plates entirely out of mesh) and with volume control full on, connect test oscillator set at 465 K.C. in series with I.F. dummy antenna, to grid of 6K7 I.F. tube.
2. Adjust trimmer condensers of output I.F. transformer No. 108-95 to resonance with oscillator.
3. Move test oscillator connection to grid of 6A8 tube and adjust trimmer condensers of input I.F. transformer No. 108-96 to resonance with oscillator. See top view for location of these transformers. There are two adjustments on each and they are accessible from the top of the transformer shield and should be adjusted with an insulated screw driver.

BROADCAST ALIGNMENT

1. With variable condenser in its minimum capacity position, connect test oscillator set at 1550 K.C. in series with broadcast dummy to the antenna lead of receiver.
2. Adjust oscillator trimmer of variable condenser to resonance. (This adjustment is on the section of the gang condenser nearest to the drive—see top view, Fig. 2).
3. Shift test oscillator to 1400 K.C. and pick up signal by rotating condenser and adjust antenna trimmer to resonance (see top view, Fig. 2).
4. Re-set test oscillator to 600 K.C. and rotate variable condenser to 600 K.C. Adjust series pad rocking gang condenser to and fro at the same time adjusting series pad for maximum gain. This adjustment is accessible from the top of chassis (see top view).
5. Go back and check 1400 K.C. If adjustment is made here, check 600 K.C. again.
6. Check for sensitivity at 1000 K.C. by setting test oscillator to this frequency and picking up the signal by rotating variable condenser. Under no circumstances bend plates of variable condenser sections to correct tracking.

DIAL ADJUSTMENT

Tune set to some station of a known frequency (between 800 and 1200 K.C.) hold selector knob, then with a screw driver adjust the slotted screw on the back of the control head, and in that way adjust the dial pointer to the correct frequency setting.

PILOT LAMP AND FUSE

PILOT LAMP—A 6-8 volt type lamp is used (Bulb No. 116-13 Bulb).

Fuse—A15 ampere automobile fuse is used. CAUTION: BE SURE THE FUSE SHIELD IS ON THE FUSE BEFORE THE LATTER IS INSERTED IN THE RECEPTACLE.

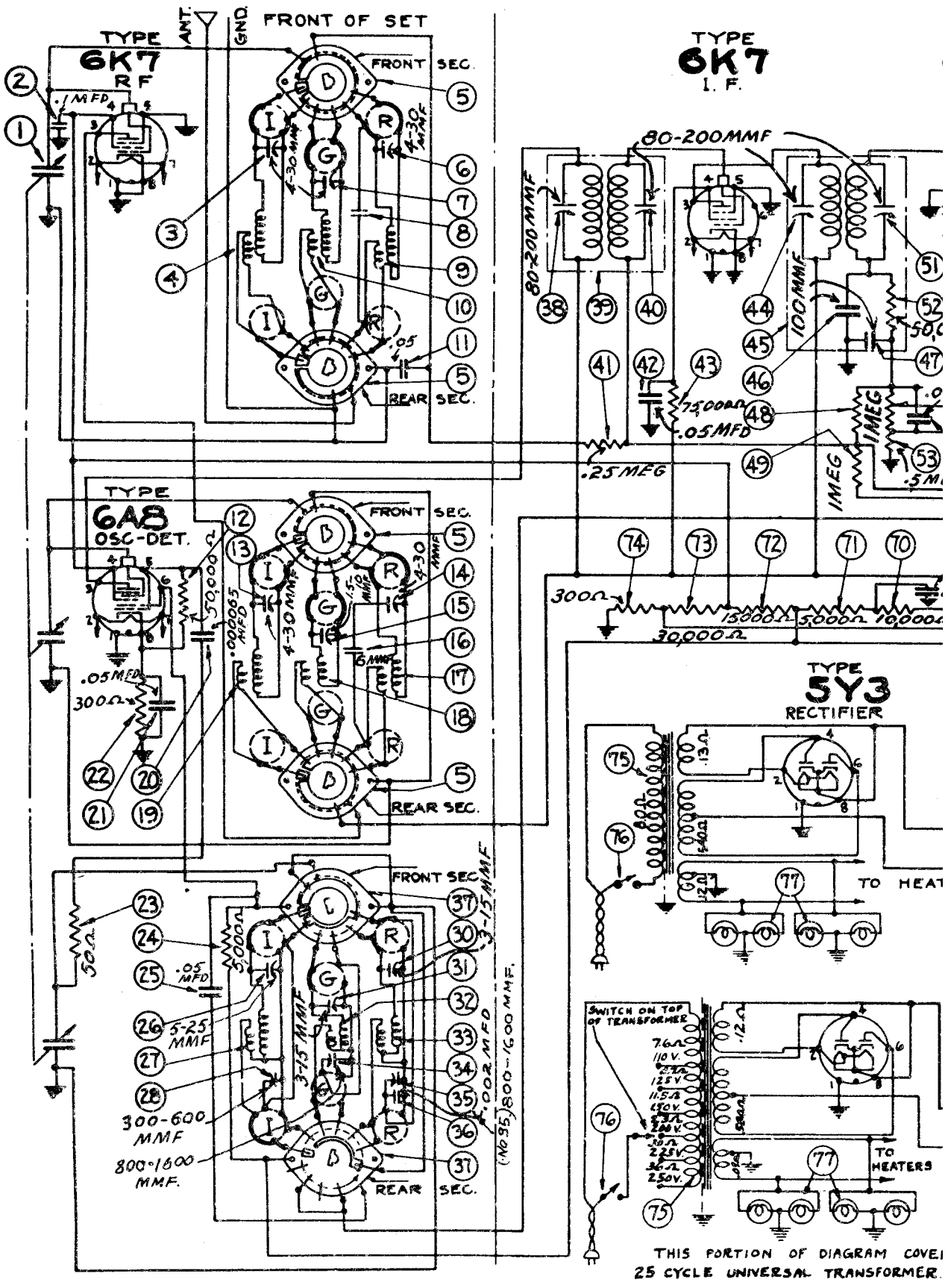

©John F. Rider, Publisher

MODELS WR-212,WR-212X,
WR-312,WR-312X
Schematic,Voltage
Resistances

NTERNATIONAL CO.

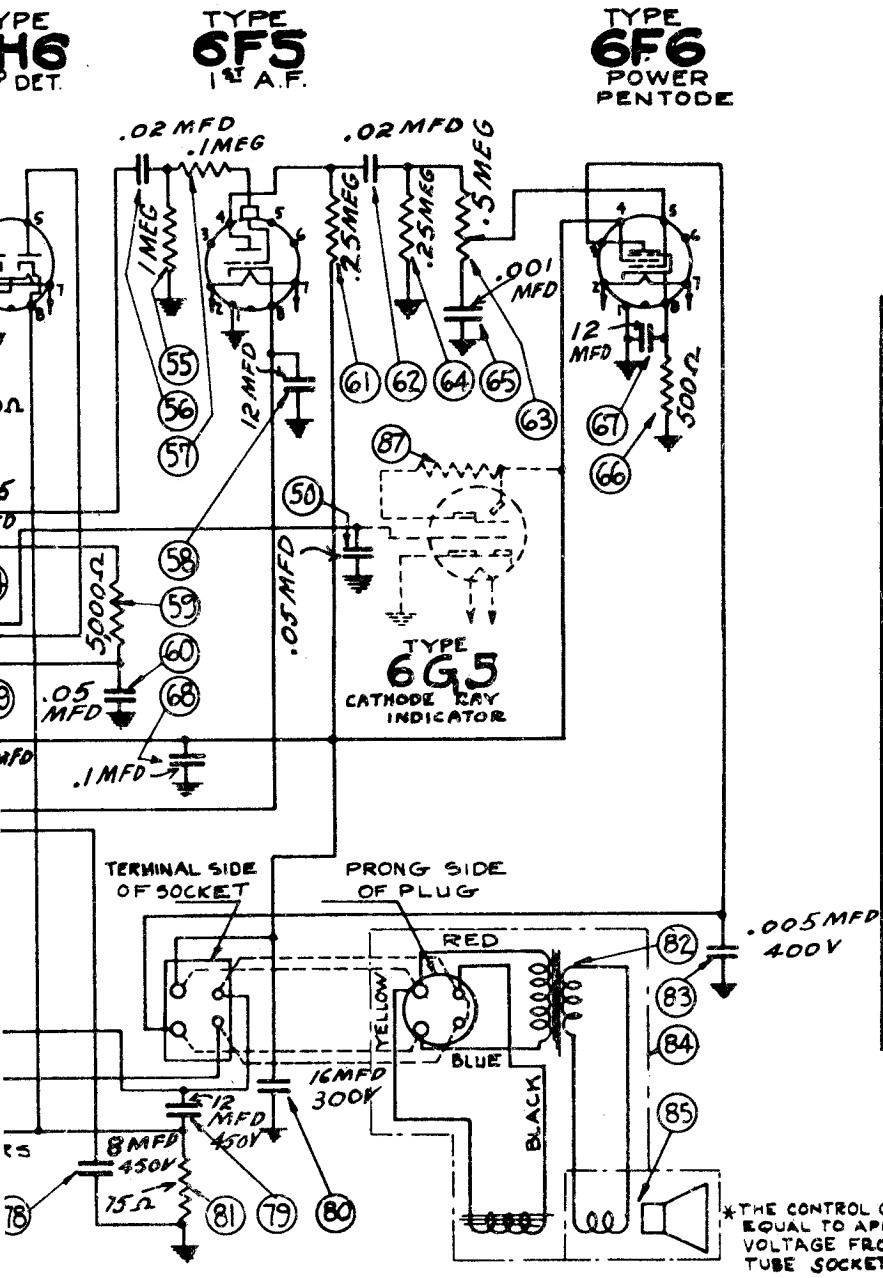

DC RESISTANCE			
MEASURED WITH WAVE-CHANGE SWITCH IN CORRESPONDING BAND POSITION			
COIL	Q.A. No	PRIM	SEC.
I-ANT	4	18.5Ω	3.8Ω
I-RF	19	0.8	10.7
I-OSC	27	1.4	3.3
G-ANT	10	2.1	1.0
G-RF	18	1.8	1.0
G-OSC	32	0.5	0.9
R-ANT	9	0.7	0.03
R-RF	17	2.0	0.03
R-OSC	33	0.5	0.03
1st IF	39	8.6	8.6
2nd IF	45	8.6	8.6
OUTPUT TRANS	82	450	0.5
SPKR FIELD		1900	
VOICE COIL	85	3	

*THE CONTROL GRID BIAS ON THE 6K7 & 6G5 TUBES EQUAL TO APPROXIMATE SIX-TENTHS THE VOLTAGE FROM PINS 5-1 ON THE 6H6 TUBE SOCKET.

INT. FREQ. 465 KC.

SOCKET VOLTAGES-LINE = 115 VOLTS TAKEN FROM BOTTOM OF SOCKETS									
MEASUREMENTS MADE WITH A 1000 OHMS PER VOLT VOLTMETER & WITH WAVE CHANGE SWITCH IN BROADCAST BAND POSITION									
TUBE	STAGE	FIL	PIN-NOS.	PLATE	PIN-NOS.	SCREEN	PIN-NOS.	BIAS	PIN-NOS.
6K7	R.F.	6.35	2-7	263	3-1	94	4-1	* SEE NOTE	
6A8	DET-OSC	6.35	2-7	263 DET 167 OSC	3-1 6-1	94	4-1	3.7	8-1
6K7	I.F.	6.35	2-7	263	3-1	103	4-1	* SEE NOTE	
6H6	2nd DET. AVC	6.35	2-7					-5.5	8-1
6F5	AUDIO	6.35	2-7	111	4-1			1.1	8-1
6F6	OUTPUT	6.35	2-7	247	3-1	263	4-1	17.5	8-1
5Y3	RECTIFIER	5.15	2-8	380	8-1				
6G5	TUNING INDICATOR	6.35	1-6	263	2-5			* SEE NOTE	

MODELS WR-212,WR-212X
WR-312,WR-312X

WESTINGHOUSE ELEC. INTERNATIONAL CO.

Socket, Trimmers
Chassis Layout

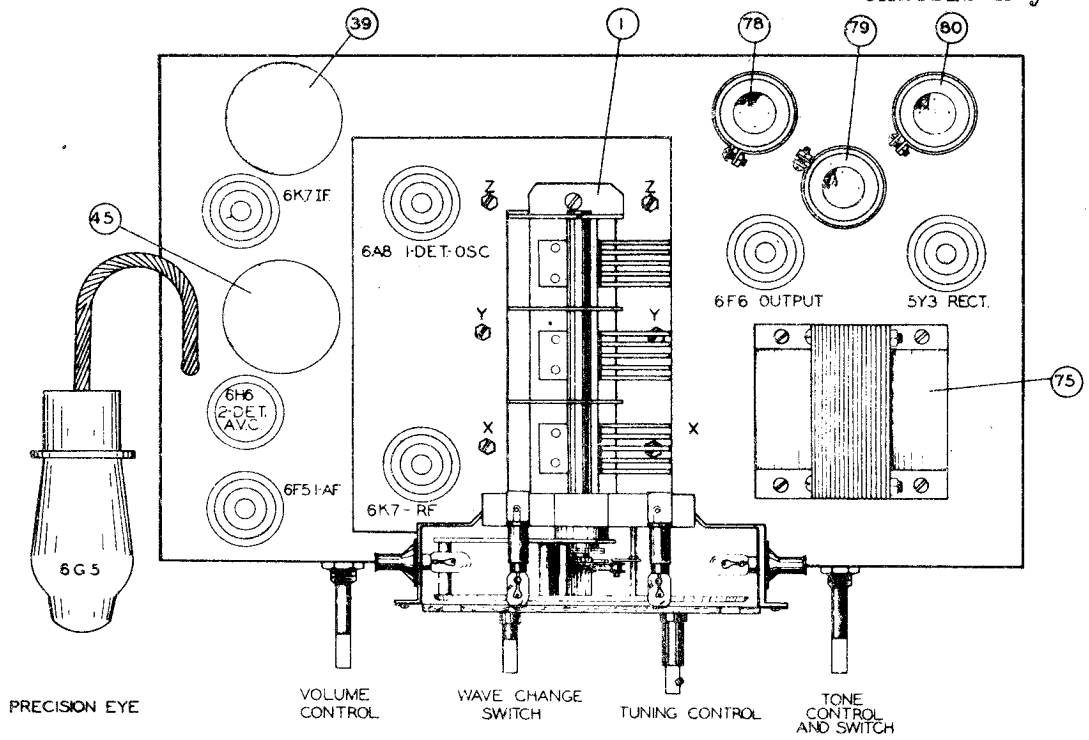

Figure No. 1

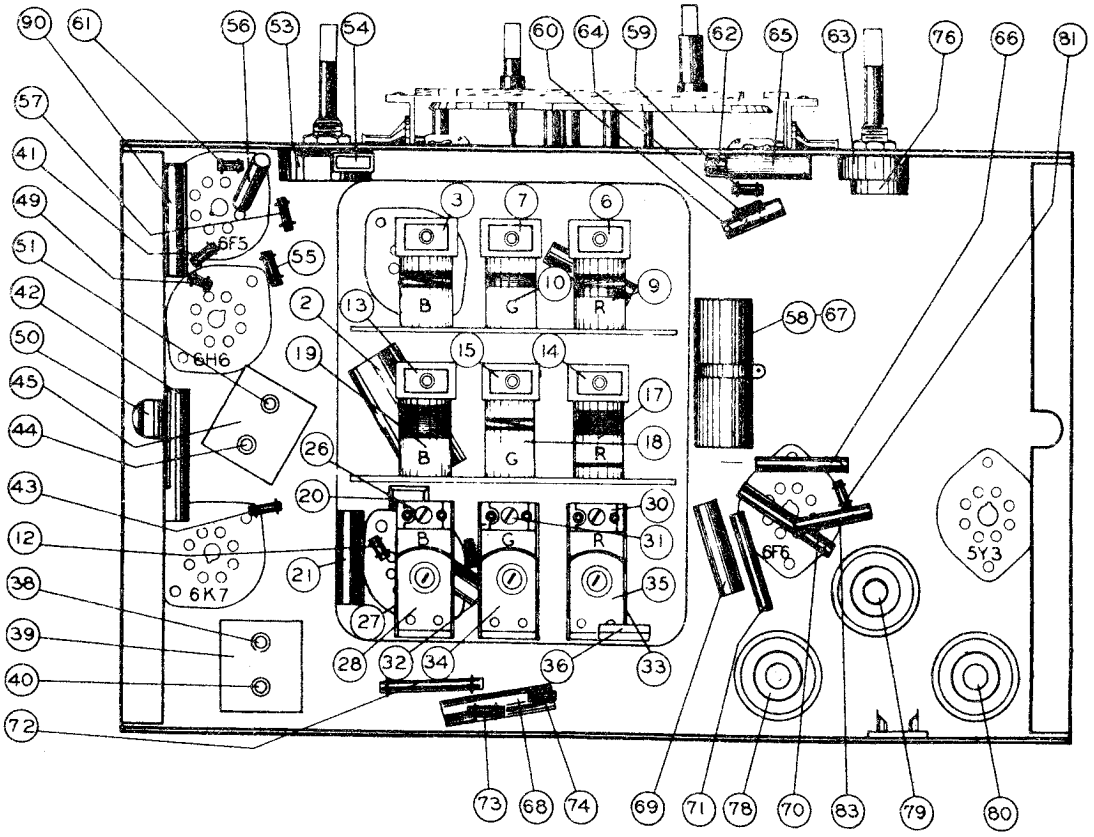

Figure No. 2

©John F. Rider, Publisher

ELECTRICAL SPECIFICATIONS

Type and Number of Tubes ... 2 #6K7,1 #6A8,1 #6H6,1 #6F5,1 #6F6,1 #6G5,1 #5Y3 - Total 8
Power Supply ..... 105 to 125 volts, 50 to 60 cycles A.C.
Power Consumption ..... 60 Watts
Maximum Output ..... 3.3 Watts
Maximum Undistorted Output ..... 2.5 Watts
Tuning Ranges ..... (White Band - 525 to 1800 KC. (Green Band - 1750 to 6000 KC. (Red Band - - 5800 to 18500 KC.
Line-Up Frequencies .. I.F.465KC.,1600KC.,570 KC.,5500 KC.,1900 KC.,17000 KC.,&6000 KC.

LINE-UP CAPACITOR ADJUSTMENTS

ADJUSTMENT OF I.F. (465 KC.)

1. Set volume control on full; turn tone control to the bass position, the wave change switch on broadcast and the dial indicator at approximately 600 KC.
2. Connect output meter across voice coil of speaker.
3. Set test oscillator to 465 KC. and adjust its output to produce a measureable reading on output meter when test signal is applied to the grid of the 6K7 I.F. tube through a .5 mfd. blocking condenser.
4. Adjust trimmers #44 and #51 to maximum output, reducing output of test oscillator as required.
5. Apply test signal to grid of 6A8 detector-oscillator and adjust #38 and #40 to maximum output.

ADJUSTMENT OF BROADCAST BAND

1. Set wave change switch to the White or Broadcast Band position.
2. Set test oscillator and dial indicator to 1600 KC.
3. Apply test signal to antenna terminal of chassis through a .0002 mfd. series condenser and adjust #26, #13 and #3 to maximum output.
4. Set test oscillator and dial indicator to 570 KC. and adjust #28 to maximum output, at the same time rocking the variable tuning condenser.
5. Return to 1600 KC. setting with both test oscillator and dial indicator and readjust #26, #13 and #3 for accuracy.

ADJUSTMENT OF GREEN BAND

NOTE: In adjusting the two short-wave bands (Green and Red) a .0002 mfd. condenser and a 400 ohm resistor connected in series should be inserted in the high side of the test oscillator leads. This condenser-resistor combination is the approximate equivalent of a short-wave antenna.

1. Set wave change switch to the Green Band position.
2. Set test oscillator and dial indicator to 5500 KC. and adjust #31, #15 and #7 to maximum output.
3. Set test oscillator and dial indicator to 1900 KC. and adjust #34 to maximum output, at the same time rocking the variable tuning condenser.
4. Return to 5500 KC. setting and make readjustment of #31, #15 and #7.

ADJUSTMENT OF RED BAND

1. Set wave change switch to the Red Band position.
2. Set test oscillator and dial indicator to 17000 KC. and adjust #30, #14 and #6 to maximum output.
3. Set test oscillator and dial indicator to 6000 KC. and adjust #35 to maximum output, at the same time rocking the variable tuning condenser.
4. Return to 17000 KC. setting and make readjustment of #30, #14 and #6.

IMPORTANT: While testing or making repairs on this receiver, the chassis should not be turned upside down or on its side for any long period of time while the set is turned on as the chemicals in the electrolytic filter condenser will come out through the air vents making the condenser appear to be defective. If left in this position too long the condenser may be injured.

PRICES SUBJECT TO CHANGE WITHOUT NOTICE

Dia. #	Part #	Description of Parts	List Price
1	CG 9550	Variable condenser	$ 4.50
2	CW 2-50	.5 mfd., 200 V. condenser	.25
3	CS 9554	4-30 mmf. trimmer condenser	.15
4	RC 95209	Antenna coil (broadcast)	1.00
5	SW 9553	Switch and bracket assembly - Antenna & R.F. Sections	1.40
6	CS 9554	4-30 mmf. trimmer condenser	.15
7	CS 9554	4-30 mmf. trimmer condenser	.15
8		Twisted wire - part of RC 95206	
9	RC 95206	Antenna coil - red band	.95
10	RC 95212	Antenna coil - green band	.80
11	CW 9513	.05 mfd., 200 V. condenser	.25
12	RE 9563	50,000 ohm, 1/4 W. resistor	.10
13	CS 9554	4-30 mmf. trimmer condenser	.15
14	CS 9554	4-30 mmf. trimmer condenser	.15
15	CS 9553	1.5-10 mmf. trimmer condenser	.15
16	CM 9512	6 mmf. mica condenser	.15
17	RC 95207	R.F. coil assembly - red	1.25
18	RC 95214	R.F. coil assembly - green	1.00
19	RC 95210	R.F. coil assembly (broadcast)	1.00
20	CM 9511	.000065 mfd. mica condenser	.15
21	CW 2-05	.05 mfd., 200 V. condenser	.15
22	RE 9529	300 ohm, 1/4 W. resistor	.10
23	RE 9537	50 ohm, 1/4 W. resistor	.10
24	RE 9526	5,000 ohm, 1 W. resistor (1/2 W. size)	.20
25	CW 9513	.05 mfd., 200 V. condenser	.25
26		5-25 mmf. trimmer condenser - part of CS 9540	.60
27	RC 95211	Oscillator coil (broadcast)	1.75
28		300-600 mmf. oscillator series cond. - part of CS 9540	.60
30		3-15 mmf. trimmer condenser - part of CS 9520	.75
31		3-15 mmf. trimmer condenser - part of CS 9520	.75
32	RC 95213	Oscillator coil - green	1.75
33	RC 95208	Oscillator coil - red	2.25
34		800-1600 mmf. oscillator series cond. - part of CS 9520	.75
35		800-1600 mmf. oscillator series cond. - part of CS 9520	.75
36	CM 959	.002 mfd. mica condenser	.25
37	SW 9554	Switch and bracket assembly - oscillator section	1.50
38		80-200 mmf. trimmer condenser - part of IC 9576	
39	IC 9576	First I.F. coil assembly - 465 KC.	1.50
40		80-200 mmf. trimmer condenser - part of IC 9576	
41	RE 9573	.25 meg., 1/8 W. resistor	.10
42	CW 2-25	.25 mfd., 200 V. condenser	.20
43	SA 105277	75,000 ohm, 1/4 W. resistor	.15
44		80-200 mmf. trimmer condenser - part of IC 9577	
45	IC 9577	Second I.F. coil assembly - 465 KC.	1.85
46		100 mmf. mica condenser - part of IC 9577	
47		100 mmf. mica condenser - part of IC 9577	
48	SA 105281	1 meg., 1/4 W. resistor	.15
49	SA 105281	1 meg., 1/4 W. resistor	.15
50	CW 2-05	.05 mfd., 200 V. condenser	.15
51		80-200 mmf. trimmer condenser - part of IC 9577	
52		50,000 ohm, 1/4 W. resistor - part of IC 9577	
53	VR 9536	Volume control - .5 meg.	.85
54	CM 9519	.0005 mfd. mica condenser	.20
55	SA 105281	1 meg., 1/4 W. resistor	.15
56	CW 2-02	.02 mfd., 200 V. condenser	.15
57	RE 9584	.1 meg., 1/4 W. resistor	.15
58		12 mfd., 25 V. condenser - part of CE 9526	.90
59	SA 105249	5,000 ohm, 1/4 W. resistor	.15
60	CW 2-05	.05 mfd., 200 V. condenser	.15
61	RE 9573	.25 meg., 1/8 W. resistor	.10
62	CW 4-02	.02 mfd., 400 V. condenser	.15
63	VR 9512	Tone control - .5 meg.	1.10
64	RE 9585	.25 meg., 1/4 W. resistor	$ .15
65	CW 2-001	.001 mfd., 200 V. condenser	.15
66	SA 107391	500 ohm, 1 W. resistor	.20
67		12 mfd., 25 V. condenser - part of CE 9526	.90
68	CW 4-10	.1 mfd., 400 V. condenser	.15
69	CW 4-10	.1 mfd., 400 V. condenser	.15
70	SA 103835	10,000 ohm, 2 W. resistor	.25
71	SA 107572	5,000 ohm, 1 W. resistor	.20
72	SA 101404	15,000 ohm, 1 W. resistor	.20
73	SA 104966	30,000 ohm, 1/2 W. resistor	.15
74	SA 105260	300 ohm, 1/4 W. resistor	.15
75	TR 9557	Power transformer - 105-125 V., 50-60 cycle	4.00
76		Switch (On & Off) - part of VR 9512	
77	LP 9515	Dial lamp - 3.5 V., .35 amp.	.20
78	CE 9528	8 mfd., 450 V. electrolytic condenser	.80
79	CE 9536	12 mfd., 450 V. electrolytic condenser	.80
80	CE 9535	16 mfd., 300 V. electrolytic condenser	.75
81	RE 95101	37 ohm, 1/4 W. resistor	.15
82	TR 9558	Output transformer	1.25
83	CW 4-005	.005 mfd., 400 V. condenser	.15
84	SK 9511	Speaker	7.50
85	SA 107282	Diaphragm	1.15
87		1 meg., 1/4 W. resistor - part of CB 9598	
88	CB 9512	Line cable assembly	.50
89	CB 9598	"Precision eye" cable assembly	.70
90	CW 2-05	.05 mfd., 200 V. condenser	.15

©John F. Rider, Publisher

WESTINGHOUSE

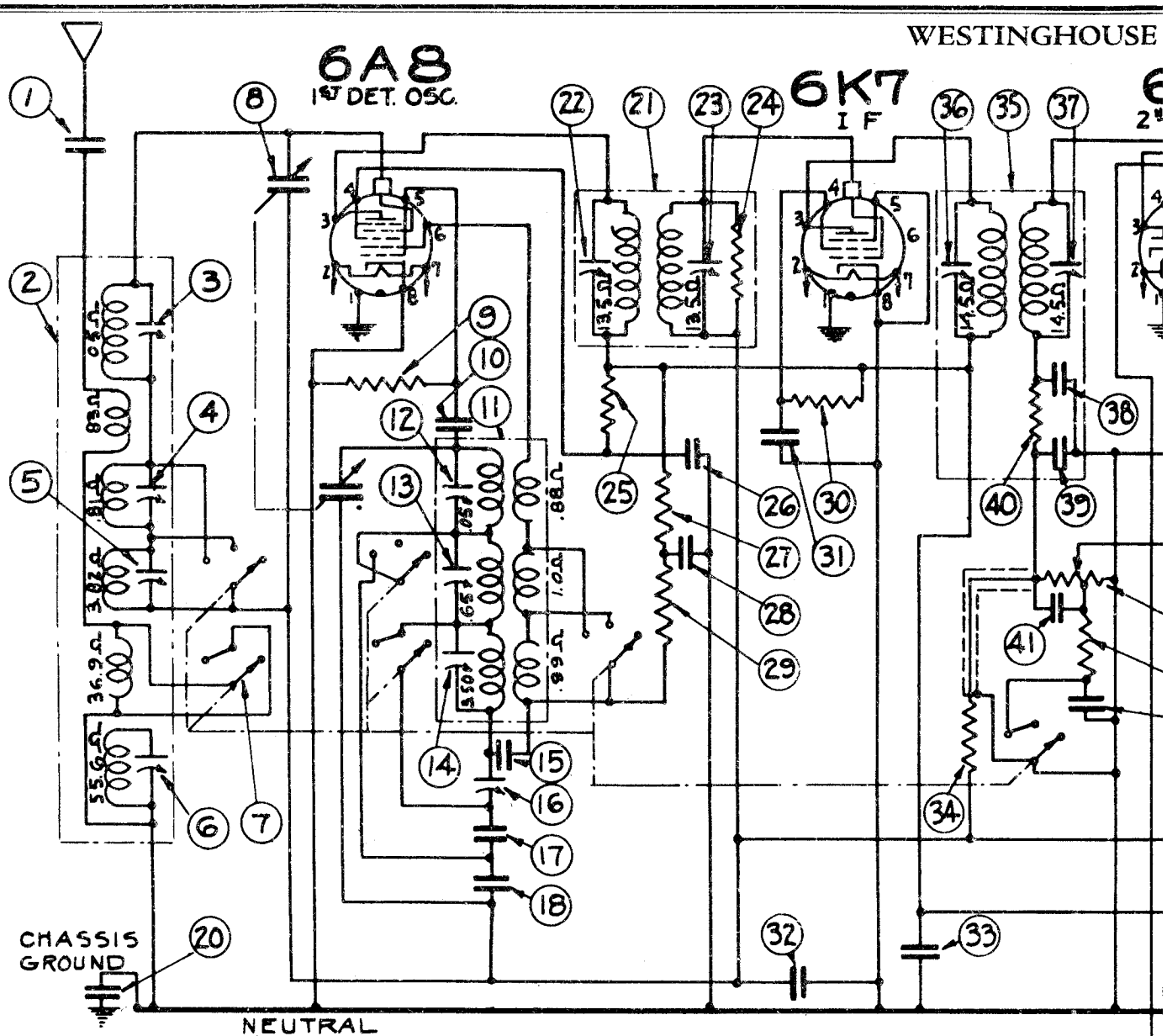

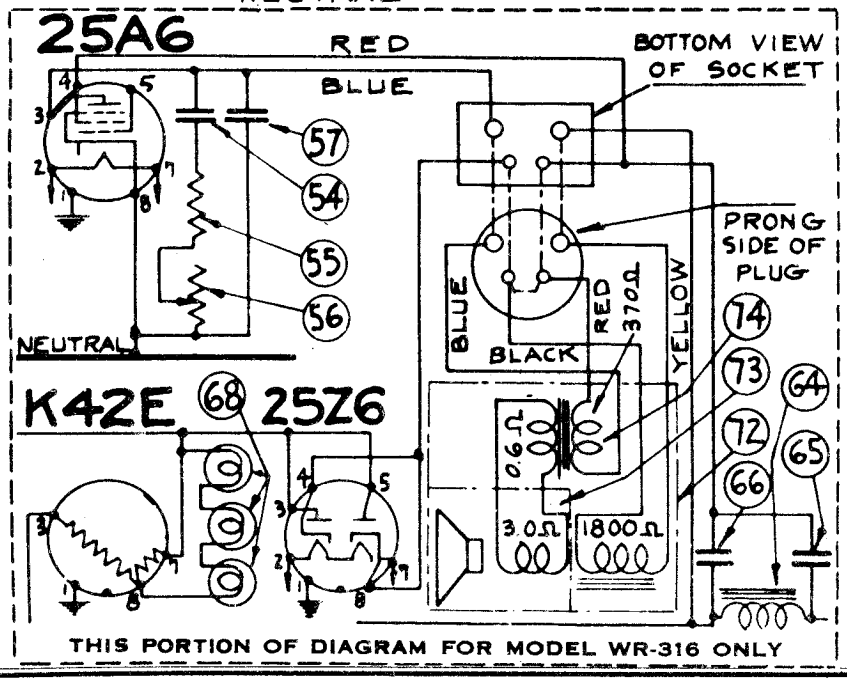

INT. FREQ. 4

WAVE CHANGE SWITCH
TREME CLOCKWISE POS

SOCKET VOLTAGES-LINE=115VOLTS TA				
MEASUREMENTS MADE WITH 1000 OHMS PE WAVE CHANGE SWITCH IN BROAD				
TUBE	STAGE	FIL.	PIN NOS.	PLATE
6A8	1ST DET-OSC	6.1	2-7	105 800
6K7	I. F.	6.0	2-7	105
6H6	2ND DET-AVC	5.95	2-7	
6F5	1ST AUDIO	5.95	2-7	59*
25A6	POWER PEN.	24.4	2-7	94
25Z6	RECTIFIER	24.6	2-7	105

* 600

©John F. Rider, Publisher

ELEC. & MFG. CO.

MODELS WR-116, WR-316
Schematic, Voltage

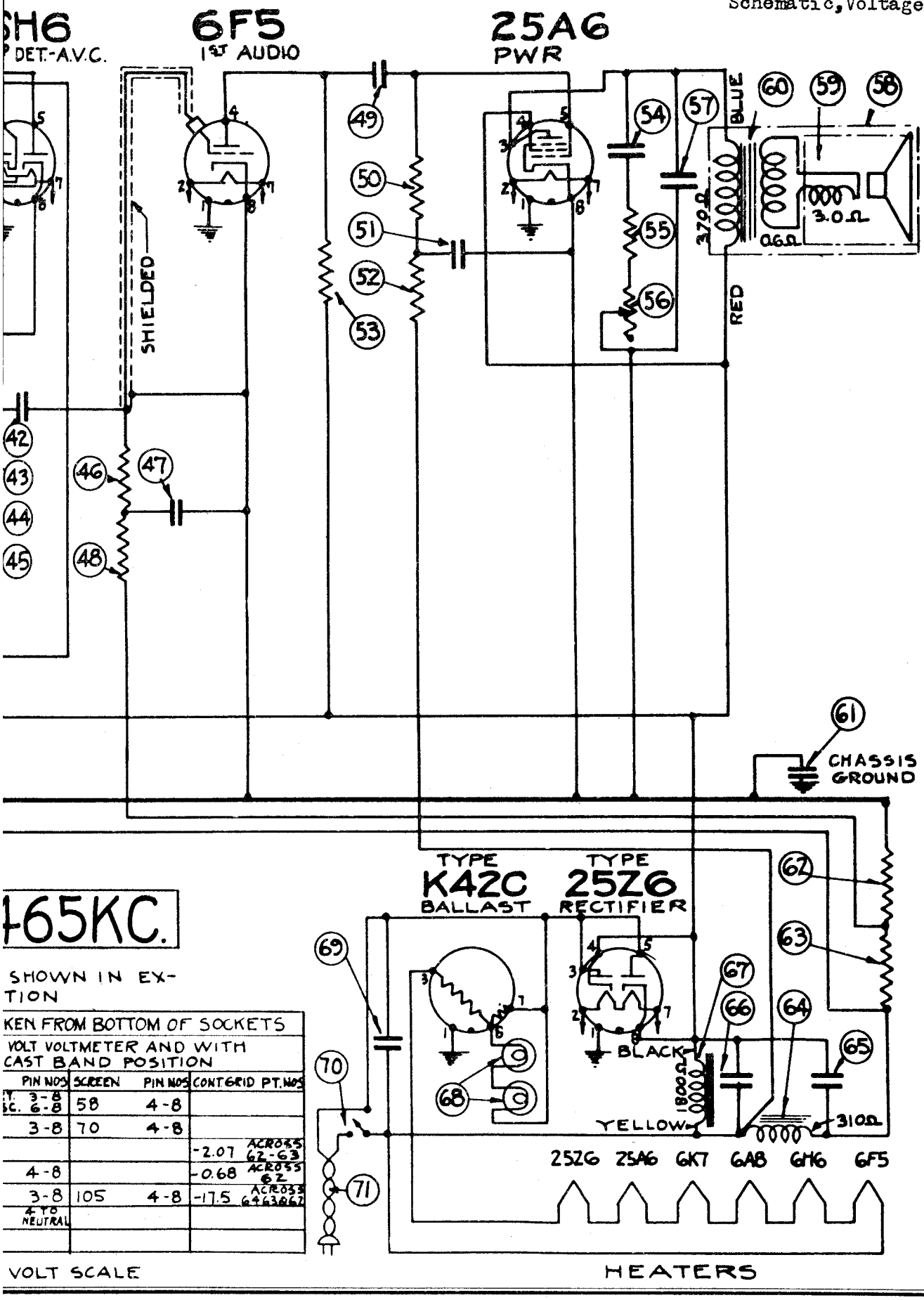

465KC.

SHOWN IN EX-
TION

KEN FROM BOTTOM OF SOCKETS
VOLT VOLTMETER AND WITH
CAST BAND POSITION

PIN NOS	SCREEN	PIN NOS	CONT GRID	PT. NOS
T. 3-8 RC. 6-8	58	4-8		
3-8	70	4-8		
			-2.07	ACROSS 62-63
4-8			-0.68	ACROSS 62
3-8	105	4-8	-17.5	ACROSS 64 & 63 & 67
4 TO NEUTRAL				

WESTINGHOUSE ELEC. & MFG. CO.

MODELS WR-116,WR316
Socket,Trimmers
Chassis Layout

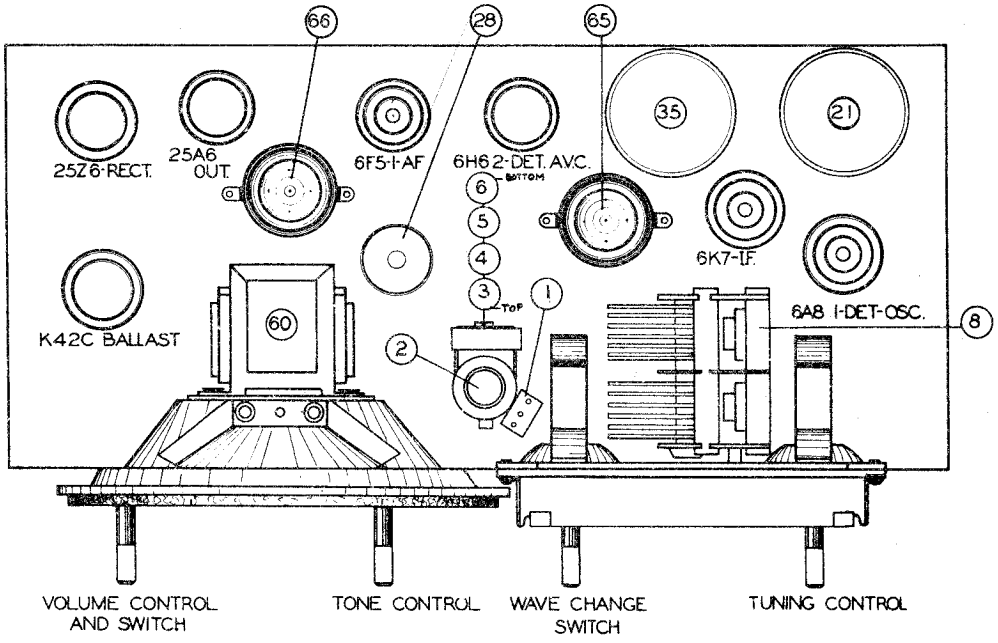

Figure No. 1

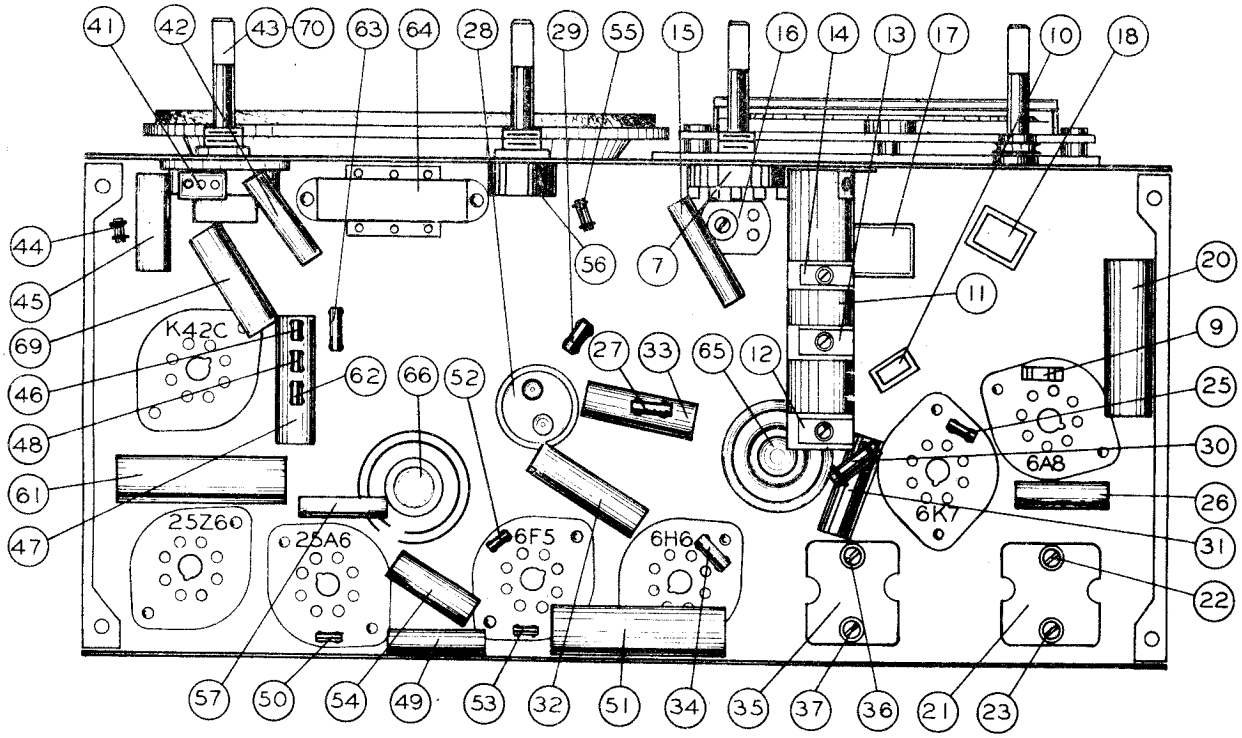

Figure No. 2

©John F. Rider, Publisher

LINE-UP CAPACITOR ADJUSTMENTS

ADJUSTMENT OF I.F. (465 KC.)

1. Set the volume control to maximum position, the tone control to treble position, the wave-change switch on broadcast and the dial indicator at approximately 600 KC.
2. Connect the output meter to the terminals of the voice coil.
3. Set the test oscillator to 465 KC. and apply the test signal to the grid of the type 6K7 I.F. tube through a .5 mfd. blocking condenser.
4. Adjust trimmer condensers #36 and #37 to maximum output.
5. Apply the test signal to the grid of the type 6A8 first detector-oscillator tube and adjust trimmer condensers #22 and #23 to maximum output.
6. Connect the test oscillator to the antenna of the receiver and with a strong input signal adjust wave trap trimmer condenser #6 to minimum output.

BROADCAST BAND ADJUSTMENT

1. Set the test oscillator and dial indicator to 1400 KC.
2. Apply the test signal to the antenna of the receiver through a .0002 mfd. condenser.
3. Adjust oscillator trimmer condenser #14 until the signal is received.
4. Adjust the preselector trimmer condenser #5 to maximum output.
5. Set test oscillator and dial indicator to 600 KC. and adjust the oscillator series condenser #16 until the signal is received. Tune the receiver to a slightly lower frequency and readjust trimmer #16 to maximum output. If the sensitivity increases, continue this procedure in the same direction until maximum sensitivity is reached. If the sensitivity decreases, try this procedure at slightly higher frequencies until maximum sensitivity is reached.
6. Return test oscillator and dial indicator to 1400 KC. and check adjustment of the oscillator and preselector trimmer condensers.

ADJUSTMENT OF GREEN BAND

1. Set the wave-change switch to the Green Band position.
2. Set the test oscillator and dial indicator to 4000 KC. and adjust the oscillator trimmer condenser #13 until the signal is received.
3. Adjust the preselector trimmer condenser #4 to maximum output.
4. Check the sensitivity and calibration over scale.

ADJUSTMENT OF RED BAND

1. Set the wave-change switch to the Red Band position.
2. Set the test oscillator and dial indicator to 15,000 KC. and adjust the oscillator trimmer condenser #12 until the signal is received. Two positions may be found at which the signal may be tuned in. Use the position with the lower capacity trimmer setting or with the alignment screw turned farther out.
3. Adjust the preselector trimmer #3 to maximum output.
4. Check the receiver over scale for calibration and sensitivity.

PRICES ARE SUBJECT TO

CHANGE WITHOUT NOTICE

ELECTRICAL SPECIFICATIONS

Type and Number of Tubes ..... 1 #6A8, 1 #6K7, 1 #6H6, 1 #6F5, 1 #25A6, 1 #25Z6, 1 #K42C (Ballast) in Model WR-116, 1 #K42E (Ballast) in Model WR-316 - Total 7

Power Supply Characteristics .... 105-125 volts D.C. or 105-125 volts, 50-60 cycle A.C.

Power Consumption ..... 52 Watts

Maximum output ..... 1.0 Watts

Maximum Undistorted Output ..... 0.75 Watts

Tuning Ranges ..... (White Band - 540 to 1550 K.C. (Green Band - 1500 to 4500 K.C. (Red Band - - 5500 to 16500 K.C.

Line-Up Frequencies ..... I.F. 465 K.C., 1400 K.C., 600 K.C., 4000 K.C., 15000 K.C.

All service parts for Model WR-316 are the same as for Model WR-116 except for the following:

Dia. #	Part #	Description of Parts	List Price
32	CW 2-25	.25 mfd., 200 V. condenser	$ .20
43	VR 9535	1/2 meg. volume control	1.10
44	RE 9527	5000 ohm, 1/4 W. resistor	.10
45	CW 2-05	.05 mfd., 200 V. condenser	.15
70		On-Off switch - part of VR 9535	
72	SK 9538	Speaker assembly (14" Dia.)	10.00
73	DM 956	Diaphragm and voice coil assembly	1.25
74	TR 9556	Output transformer	1.35
80	CL 9556	Field coil	1.60

(WR-116)

Dia. #	Part #	Description of Parts	List Price
1	SA 103775	.001 mfd. mica condenser	$ .20
2	RC 95202	Antenna coil assembly	2.25
3		4-25 mmf. trimmer condenser - part of RC 95202	
4		1.5-10 mmf. trimmer condenser - part of RC 95202	
5		1.5-10 mmf. trimmer condenser - part of RC 95202	
6		30-60 mmf. trimmer condenser - part of RC 95202	
7	SW 9548	Wave-change switch	1.00
8	CG 9549	Variable condenser (2 gang)	2.50
9	RE 9581	50,000 ohm, 1/4 W. resistor	.15
10	SA 106417	.0001 mfd. mica condenser	.20
11	RC 95203	Oscillator coil assembly	1.75
12		4-25 mmf. trimmer condenser - part of RC 95203	
13		1.5-10 mmf. trimmer condenser - part of RC 95203	
14		1.5-10 mmf. trimmer condenser - part of RC 95203	
15	CW 4-005	.005 mfd., 400 V. condenser	.15
16	CS 9545	300-600 mmf. oscillator series condenser	.40
17	CM 9525	.0027 mfd. mica condenser	.30
18	CM 9524	.0034 mfd. mica condenser	.35
20	CW 6-10	.1 mfd., 600 V. condenser	.20
21	IC 9573	1st I.F. coil (465 KC.)	2.00
22		30-100 mmf. trimmer condenser - part of IC 9573	
23		30-100 mmf. trimmer condenser - part of IC 9573	
24		500,000 ohm, 1/4 W. resistor - part of IC 9573	
25	RE 9536	20,000 ohm, 1/4 W. resistor	.10
26	CW 2-05	.05 mfd., 200 V. condenser	.15
27	SA 105249	5000 ohm, 1/4 W. resistor	.15
28	CE 9540	4 mfd., 150 V. condenser	.95
29	SA 105249	5000 ohm, 1/4 W. resistor	.15
30	RE 9568	25,000 ohm, 1/4 W. resistor	.10
31	CW 2-05	.05 mfd., 200 V. condenser	.15
32	CW 2-10	.1 mfd., 200 V. condenser	.15
33	CW 2-10	.1 mfd., 200 V. condenser	.15
34	RE 9577	2 meg., 1/2 W. resistor	.15
35	IC 9574	Second I.F. coil (465 KC.)	1.75
36		30-100 mmf. trimmer condenser - part of IC 9574	
37		30-100 mmf. trimmer condenser - part of IC 9574	
38		.0001 mfd. mica condenser - part of IC 9574	
39		.0001 mfd. mica condenser - part of IC 9574	
40		50,000 ohm, 1/8 W. resistor - part of IC 9574	
41	CM 9519	.0005 mfd. mica condenser	.20
42	CW 4-005	.005 mfd., 400 V. condenser	.15
43	VR 9533	1/2 meg. volume control	1.10
44	RE 9568	25,000 ohm, 1/4 W. resistor	.10
45	CW 4-01	.01 mfd., 400 V. condenser	.15
46	RE 9572	500,000 ohm, 1/4 W. resistor	.15
47	CW 2-10	.1 mfd., 200 V. condenser	.15
48	RE 9572	500,000 ohm, 1/4 W. resistor	.15
49	CW 4-01	.01 mfd., 400 V. condenser	.15
50	RE 9572	500,000 ohm, 1/4 W. resistor	.15
51	CW 9525	1 mfd., 100 V. condenser	.40
52	RE 9534	100,000 ohm, 1/8 W. resistor	.10
53	RE 9531	250,000 ohm, 1/8 W. resistor	.10
54	CW 2-05	.05 mfd., 200 V. condenser	.15
55	RE 9550	2000 ohm, 1/4 W. resistor	.15
56	VR 9534	20,000 ohm tone control	.55
57	CW 4-01	.01 mfd., 400 V. condenser	.15
58	SK 9532	Speaker (6" Dia.)	6.50
59	SA 106617	Diaphragm and voice coil	1.15
60	TR 9554	Output transformer	1.25
61	CW 6-10	.1 mfd., 600 V. condenser	.15
62	RE 9571	15 ohm, 1/4 W. resistor	$ .15
63	RE 9556	25 ohm, 1/4 W. resistor	.15
64	TR 9553	Choke coil	1.10
65	CE 9538	20 mfd., 150 V. condenser	.85
66	CE 9539	30 mfd., 150 V. condenser	.90
67	CL 9554	Field coil	1.50
68	LP 9516	Dial lamp - 6.3 volts, 0.15 ampere	.20
69	CW 2-10	.1 mfd., 200 V. condenser	.15
70		On-Off switch - part of VR 9533	
71	CB 9512	Line cable and plug	.50

MAIN ASSEMBLIES

CH 95114	Chassis assembly	
KA 9554	Cabinet	
SK 9532	Speaker assembly	6.50

©John F. Rider, Publisher

WESTINGHOUSE

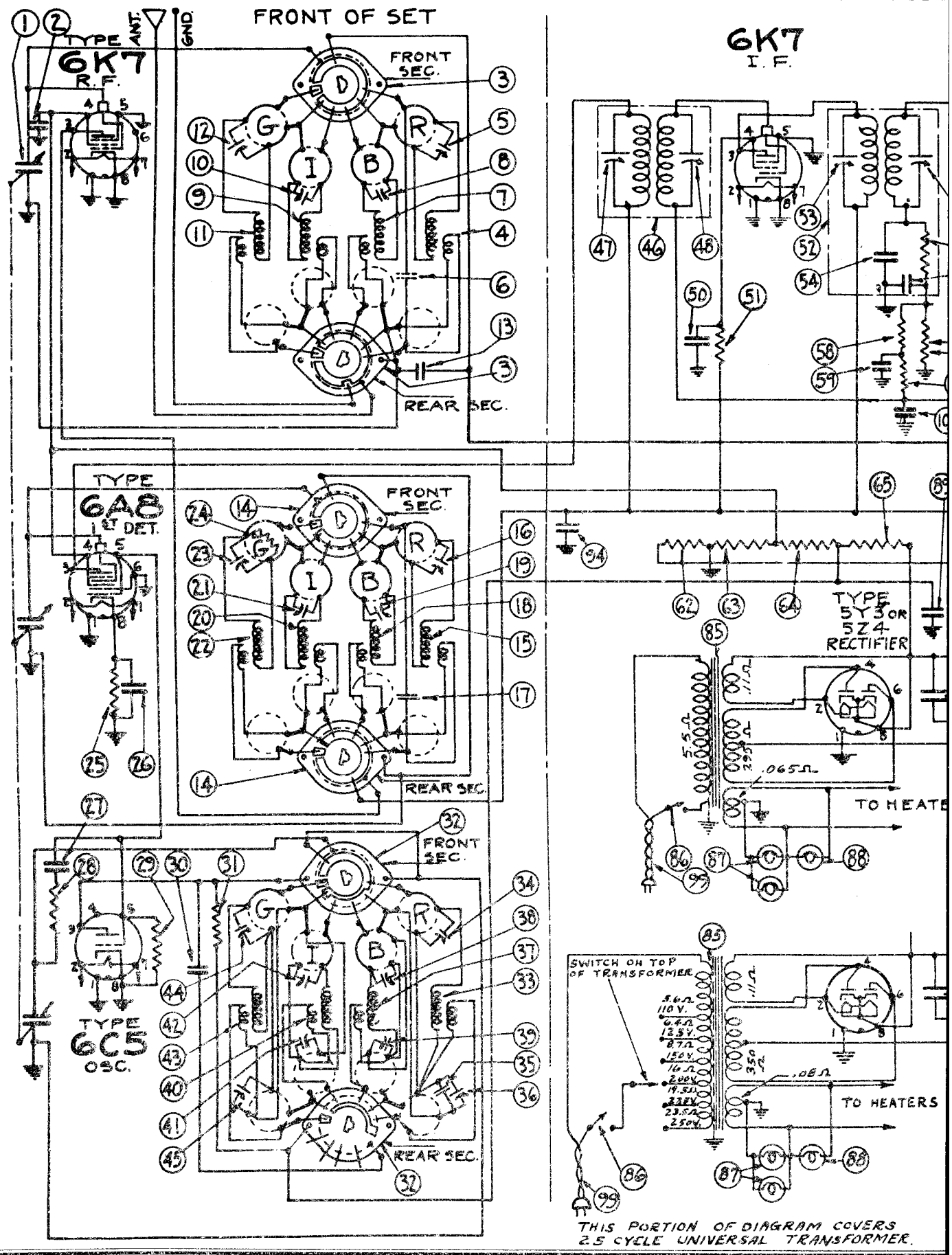

©John F. Rider, Publisher

ELEC. & MFG. CO.

MODELS WR-214, WR-314
Schematic, Voltage
Resistances

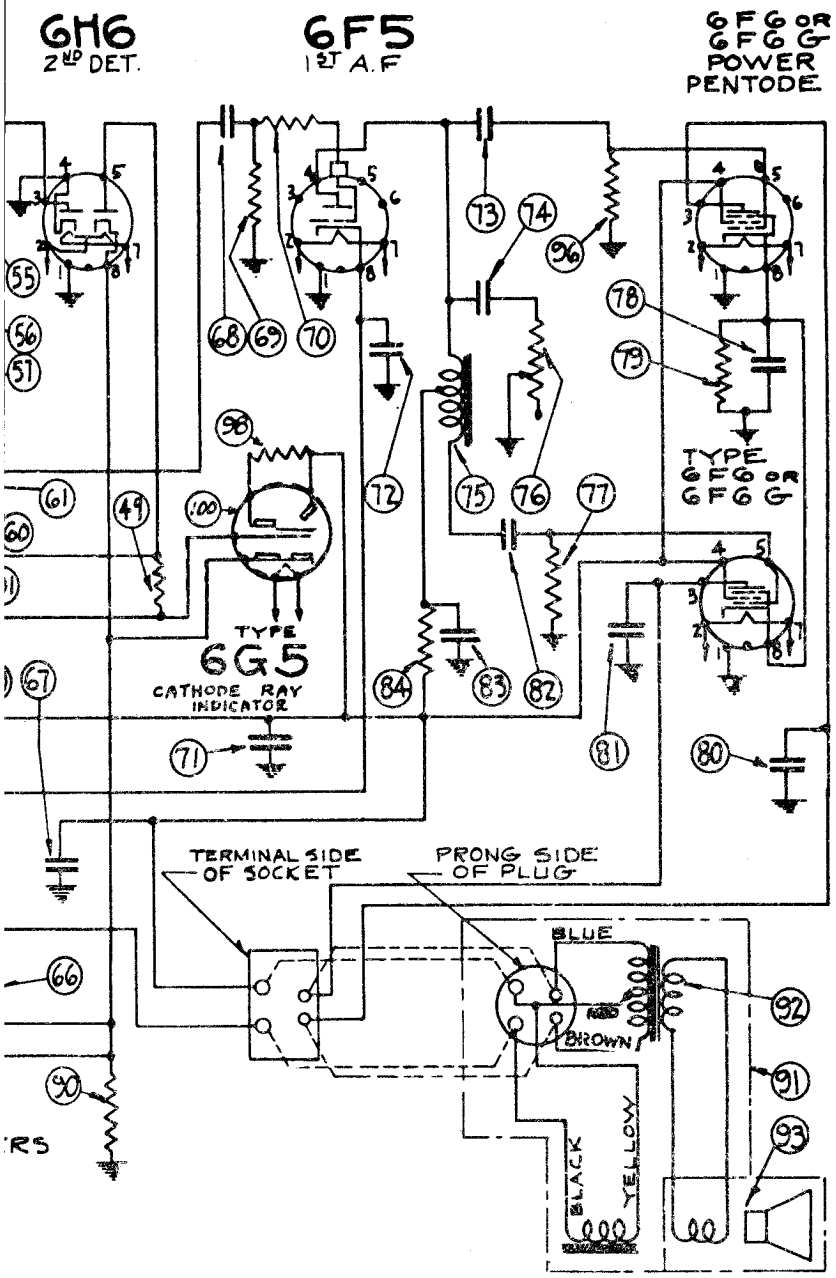

D.C. RESISTANCE			
MEASURED WITH WAVE CHANGE SWITCH IN CORRESPONDING BAND POSITION			
COIL	DIA. NO.	PRIM.	SEC
G-ANT	11	120	20
G-R.F.	22	11	20
G-OSC.	43	6	8
I-ANT.	9	18.5	3.8
I-R.F.	20	0.8	10.7
I-OSC.	40	1.4	3.3
B-ANT.	7	2.1	1.0
B-R.F.	18	1.8	1.0
B-OSC.	37	0.5	0.9
R-ANT	4	0.7	.003
R-R.F.	15	2.0	.003
R-OSC	33	0.5	.003
1ST I.F.	46	8.6	8.6
2ND I.F.	52	8.6	8.6
INTERSTAGE TRANS.	75	4200	9000
OUTPUT TRANS.	92	[illegible]	.03
SPKR FIELD		1800	
VOICE COIL	93	3.2	

INT. FREQ. 465KC.

SOCKET VOLTAGES-LINE=115 VOLTS TAKEN FROM BOTTOM OF SOCKETS									
MEASUREMENTS MADE WITH A 1000 OHMS PER VOLT VOLTMETER & WITH WAVE CHANGE SWITCH IN BROADCAST BAND POSITION									
TUBE	STAGE	FIL.	PIN NOS	PLATE	PIN NOS	SCREEN	PIN NOS	BIAS	PIN NOS
6K7	R.F.	6.25	2-7	245	3-1	100	4-1	*SEE NOTE	
6A8	1ST DET.	6.25	2-7	250	3-1	100	4-1	2.4	8-1
6C5	OSC.	6.25	2-7	180	3-1				
6K7	I.F.	6.25	2-7	250	3-1	105	4-1	*SEE NOTE	
6H6	2ND DET.	6.25	2-7					5.1	8-1
6F5	AUDIO	6.25	2-7	230	4-1			1.5	8-1
6F6	OUTPUT	6.25	2-7	235	3-1	250	4-1	21.5	8-1
5Y3	RECTIFIER	5.	2-8	355	8-1				
6F6	OUTPUT	6.25	2-7	235.	3-1	250	4-1	21.5	8-1
6G5	TUNING INDICATOR	6.25	1-6	263	2-5			*SEE NOTE	

* CONTROL GRID BIAS ON 6K7 & 6G5 TUBES IS EQUAL TO APPROX. SIX-TENTHS THE VOLTAGE FROM PINS 5-1 ON THE 6H6 TUBE SOCKET.

MODELS WR-214,WR-314

WESTINGHOUSE ELEC. & MFG. CO.

Socket,Trimmers
Chassis Layout

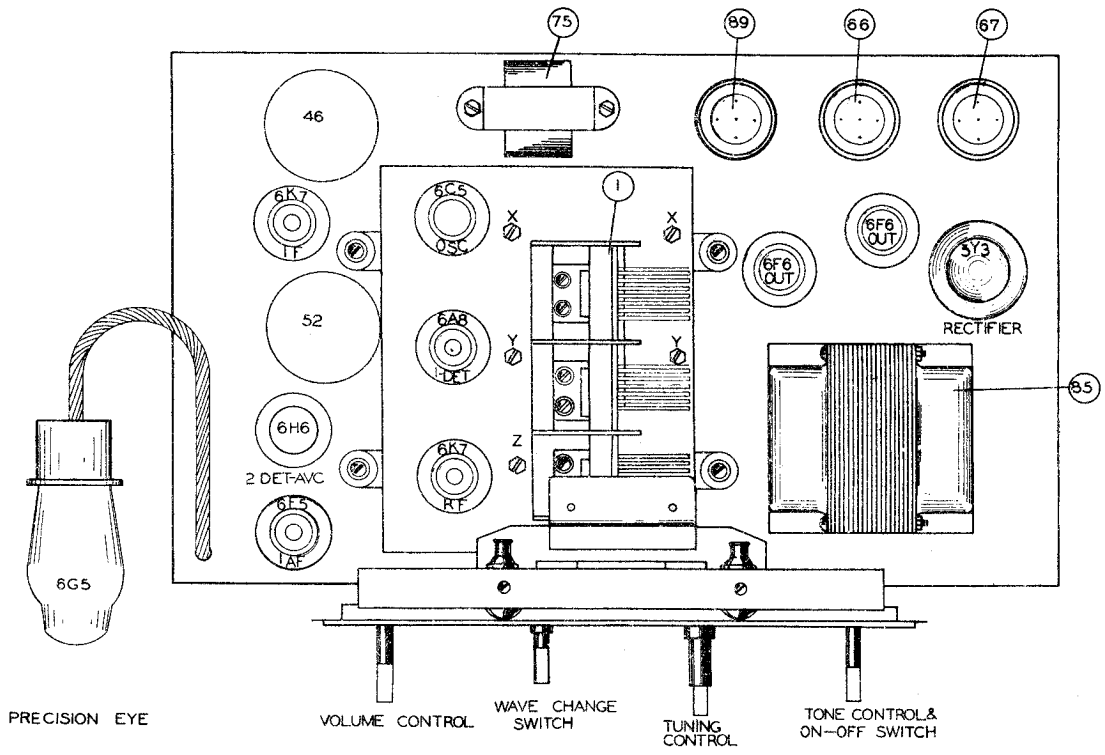

Figure No. 1

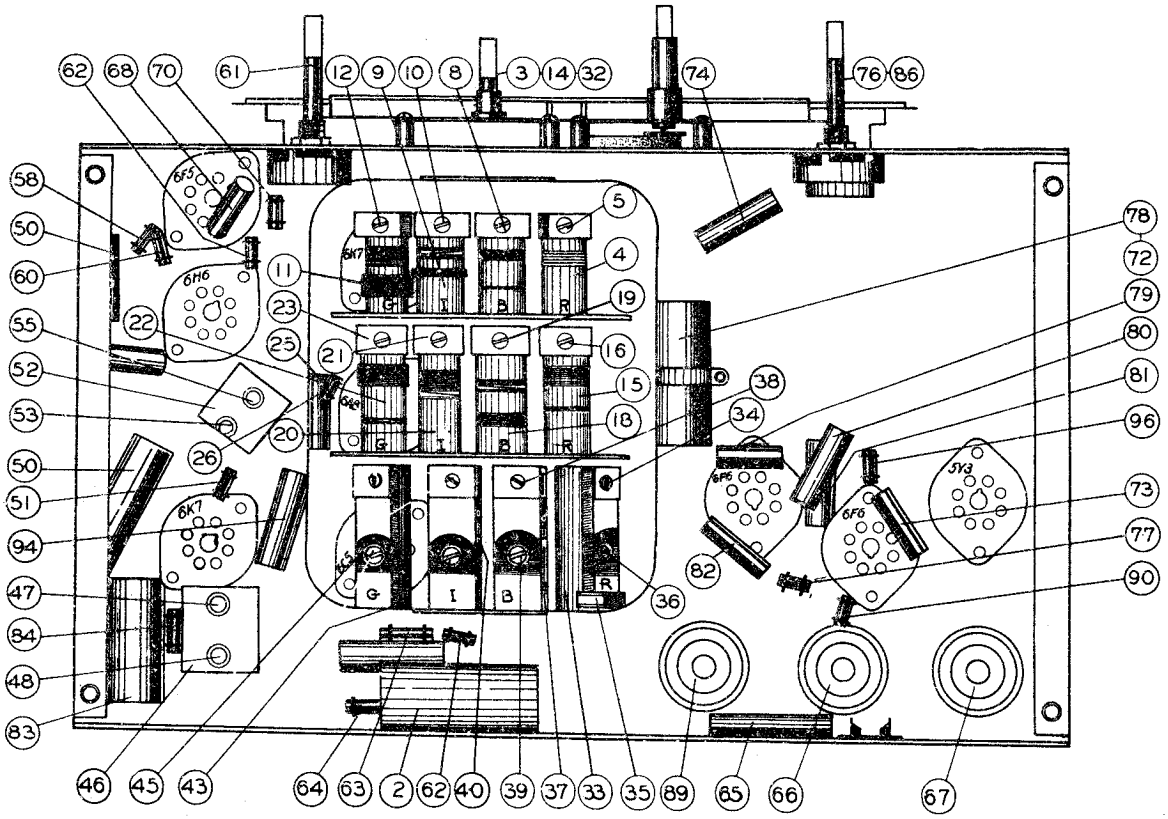

Figure No. 2

ELECTRICAL SPECIFICATIONS

Type and Number of Tubes ..... 2 #6K7, 1 #6A8, 1 #6C5, 1 #6H6, 1 #6F5, 2 #6F6, 1 #6G5, 1 #5Y3 - Total 10
Power Supply ..... 105 to 125 volts, 50 to 60 cycles
Power Consumption ..... 80 Watts
Maximum Undistorted Output ..... 4.5 Watts
Maximum Output ..... 6.5 Watts
Tuning Ranges ..... (Green Band - 150 to 390 KC. (White Band - 525 to 1800 KC. (Blue Band - 1750 to 6000 KC. (Red Band - - 5800 to 18500 KC.
Line-Up Frequencies .. I.F. 465 KC.,350 KC.,165 KC.,1600 KC.,570 KC.,5500 KC.,1900 KC., 17000 KC., and 6000 KC.

LINE-UP CAPACITOR ADJUSTMENTS

ADJUSTMENT OF I.F. (465 KC.)

1. Set volume control on full and turn tone control to bass position.
2. Connect output meter across voice coil of speaker.
3. Set test oscillator to 465 KC. and adjust its output to produce a measurable reading on output meter when test signal is applied to the grid of 6K7 I.F. tube through a .5 mfd. blocking condenser.
4. Adjust trimmers #53 and #55 for maximum output reducing output of test oscillator as required.
5. Apply test signal to grid of 6A8 first detector and adjust #47 and #48 for maximum output.

ADJUSTMENT OF GREEN BAND

1. Set wave change switch to Green Band position.
2. Set test oscillator and dial indicator to 350 KC.
3. Apply test signal to antenna terminal of the chassis through a .0002 mfd. series condenser and adjust #44, #23, and #12 for maximum output.
4. Set test oscillator and dial indicator to 165 KC. and adjust #45 for maximum output, at the same time rocking the variable tuning condenser.
5. Return to 350 KC. setting with both test oscillator and dial indicator and repeat adjustment of #44, #23 and #12 for accuracy.

ADJUSTMENT OF BROADCAST BAND

1. Set wave change switch to the White or Broadcast Band position.
2. Set test oscillator and dial indicator to 1600 KC. and adjust #42, #21 and #10 for maximum output.
3. Set test oscillator and dial indicator to 570 KC., and adjust #41 for maximum output, at the same time rocking the variable tuning condenser.
4. Return to 1600 KC. setting and make readjustment of #42, #21 and #10.

ADJUSTMENT OF BLUE BAND

NOTE: In adjusting the Blue and Red Bands, a .0002 mfd. condenser and a 400 ohm resistor connected in series should be inserted in the high side of the test oscillator leads. This condenser-resistor combination is the approximate equivalent of a short-wave antenna.

1. Set wave change switch to Blue Band position.
2. Set test oscillator and dial indicator to 5500 KC. and adjust #38, #19 and #8 for maximum output.
3. Set test oscillator and dial indicator to 1900 KC. and adjust #39 for maximum output, at the same time rocking the variable tuning condenser.

ADJUSTMENT OF RED BAND

1. Set wave change switch to Red Band position.
2. Set test oscillator and dial indicator to 17000 KC. and adjust #34, #16 and #5 for maximum output.
3. Set test oscillator and dial indicator to 6000 KC. and adjust #36 for maximum output, at the same time rocking the variable tuning condenser.
4. Return to 17000 KC. setting and make readjustment of #34, #16 and #5.

IMPORTANT: While testing or making repairs on this receiver, the chassis should not be turned upside down or on its side for any long period of time while the set is turned on as the chemicals in the electrolytic filter condenser will come out through the air vents making the condenser appear to be defective. If left in this position too long the condenser may be injured.

PRICES ARE SUBJECT TO CHANGE WITHOUT NOTICE

Dia. #	Part #	Description of Parts	List Price
1	CG 9551	Variable condenser - 3 gang	$ 4.50
2	CW 2-100	1 mfd., 200 V. condenser	.40
3	SW 9555	Switch and bracket assembly - antenna section	1.40
4	RC 95220	Antenna coil (Red)	.95
5	CS 9554	4-30 mmf. trimmer condenser	.15
6		Twisted wire - part of RC 95220	
7	RC 95212	Antenna coil (Blue)	.80
8	CS 9554	4-30 mmf. trimmer condenser	.15
9	RC 95218	Antenna coil (White)	1.00
10	CS 9554	4-30 mmf. trimmer condenser	.15
11	RC 95219	Antenna coil (Green)	1.25
12	CS 9554	4-30 mmf., trimmer condenser	.15
13	CW 9513	.05 mfd., 200 V. condenser	.25
14	SW 9556	Switch and bracket assembly - R.F. section	1.40
15	RC 95217	R.F. coil (Red)	1.35
16	CS 9554	4-30 mmf. trimmer condenser	.15
17	CM 9512	6 mmf. mica condenser	.15
18	RC 95214	R.F. coil (Blue)	1.00
19	CS 9553	1.5-10 mmf. trimmer condenser	.15
20	RC 95215	R.F. coil (White)	1.00
21	CS 9554	4-30 mmf. trimmer condenser	.15
22	RC 95216	R.F. coil (Green)	1.30
23	CS 9553	1.5-10 mmf. trimmer condenser	.15
24		.1 meg., 1/4 W. resistor - part of RC 95216	
25	RE 9529	300 ohm, 1/4 W. resistor	.10
26	CW 2-05	.05 mfd., 200 V. condenser	.15
27	CM 9511	.000065 mfd. mica condenser	.15
28	RE 9537	50 ohm, 1/4 W. resistor	.10
29	RE 9524	50,000 ohm, 1/4 W. resistor	.10
30	CW 9515	.05 mfd., 200 V. condenser	.25
31	RE 9526	5,000 ohm, 1 W. resistor	.20
32	SW 9557	Switch and bracket assembly - oscillator section	1.50
33	RC 95223	Oscillator coil (Red)	2.50
34		3-15 mmf., trimmer condenser - part of CS 9557	.80
35	CM 959	.002 mfd., mica condenser	.25
36		800-1600 mmf. oscillator series cond. - part of CS 9557	
37	RC 95213	Oscillator coil (Blue)	1.75
38		3-15 mmf. trimmer condenser - part of CS 9520	.75
39		800-1600 mmf. osc. series condenser - part of CS 9520	
40	RC 95221	Oscillator coil (White)	1.80
41		300-600 mmf. osc. series condenser - part of CS 9517	.55
42		5-25 mmf. trimmer condenser - part of CS 9517	
43	RC 95222	Oscillator coil (Green)	1.85
44		50-100 mmf. trimmer condenser - part of CS 9558	.50
45		60-150 mmf. osc. series condenser - part of CS 9558	
46	IC 9576	First I.F. coil assembly - 465 K.C.	1.50
47		80-200 mmf. trimmer condenser - part of IC 9576	
48		80-200 mmf. trimmer condenser - part of IC 9576	
49	RE 9585	.25 meg., 1/4 W. resistor	.15
50	CW 2-25	.25 mfd., 200 V. condenser	.15
51	SA 105277	75,000 ohm, 1/4 W. resistor	.15
52	IC 9577	Second I.F. coil assembly - 465 KC.	1.85
53		80-200 mmf. trimmer condenser - part of IC 9577	
54		100 mmf. mica condenser - part of IC 9577	
55		80-200 mmf. trimmer condenser - part of IC 9577	
56		50,000 ohm, 1/4 W. resistor - part of IC 9577	
57		100 mmf. mica condenser - part of IC 9577	
58	SA 105281	1 meg., 1/4 W. resistor	.15
59	CW 2-05	.05 mfd., 200 V. condenser	.15
60	SA 105281	1 meg., 1/4 W. resistor	.15
61	VR 959	.5 meg. volume control	1.00
62	SA 105268	1500 ohm, 1/4 W. resistor	.15
63	SA 104966	30,000 ohm, 1/2 W. resistor	$ .15
64	SA 101404	15,000 ohm, 1 W. resistor	.20
65	SA 103835	10,000 ohm, 2 W. resistor	.25
66	CE 9536	12 mfd., 450 V. electrolytic condenser	.80
67	CE 9535	16 mfd., 300 V. electrolytic condenser	.75
68	CW 4-02	.02 mfd., 400 V. condenser	.15
69	SA 105281	1 meg., 1/4 W. resistor	.15
70	RE 9584	.1 meg., 1/4 W. resistor	.15
71	CW 4-10	.1 mfd., 400 V. condenser	.15
72	CE 9526	12 mfd., 25 V. electrolytic condenser	.90
73	CW 4-02	.02 mfd., 400 V. condenser	.15
74	CW 4-02	.02 mfd., 400 V. condenser	.15
75	TR 9563	Interstage transformer	2.50
76	VR 9537	.1 meg., tone control - 5,000 ohm min.	1.00
77	RE 9585	.25 meg., 1/4 W. resistor	.15
78		12 mfd. electrolytic condenser - part of CE 9526	
79	RE 9587	500 ohm resistor	.35
80	CW 4-005	.005 mfd., 400 V. condenser	.15
81	CW 4-005	.005 mfd., 400 V. condenser	.15
82	CW 4-02	.02 mfd., 400 V. condenser	.15
83	CW 9526	1 mfd., 400 V. condenser	.40
84	SA 105272	10,000 ohm, 1/4 W. resistor	.15
85	TR 9562	Power transformer - 105-125 V., 50-60 cycle	5.00
86		On & Off switch - part of VR 9537	
87	LP 9515	Dial lamp - 3.5 V., .35 amp.	.20
88	LP 9510	Tuning indicator lamp - 6.3 V., .25 amp.	.15
89	CE 9528	8 mfd., 450 V. electrolytic condenser	.80
90	RE 95101	37 ohm, 1/4 W. resistor	.15
91	SK 9537	Speaker	7.50
92	TR 9577	Output transformer	1.75
93	SA 107282	Diaphragm and voice coil assembly	1.15
94	CW 4-05	.05 mfd., 400 V. condenser	.15
96	RE 9585	.25 meg., 1/4 W. resistor	.15
98		1 meg., 1/4 W. resistor - part of CB 9598	
99	CB 9512	Line cable and plug	.50
100	CB 9598	"Precision eye" cable assembly	.70
101	CW 2-05	.05 mfd., 200 V. condenser	.15

©John F. Rider, Publisher

WESTINGHOUSE ELEC. & MFG. CO.

MODEL WR-222
Schematic, Voltage
Resistances

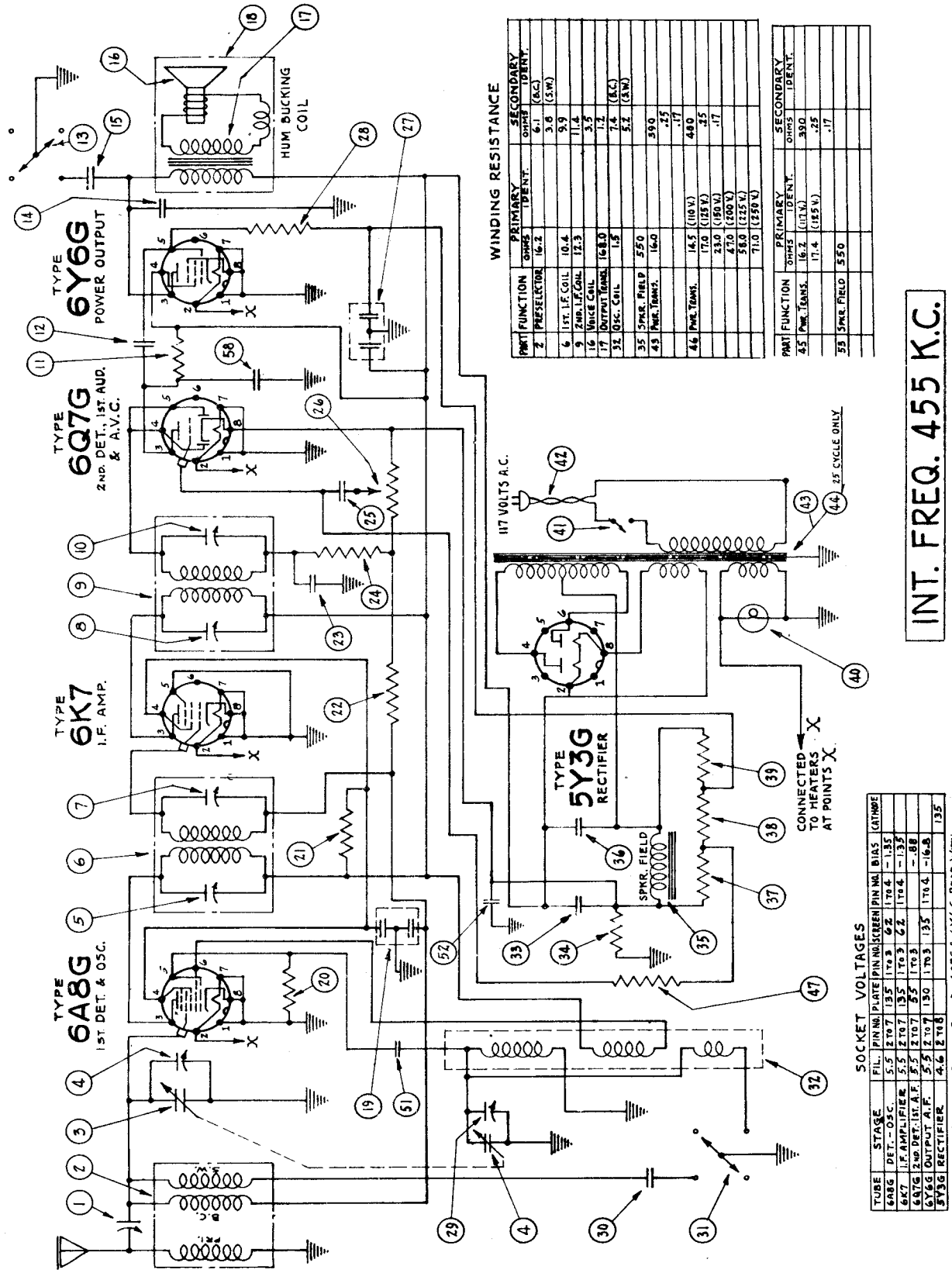

WINDING RESISTANCE

PART	FUNCTION	PRIMARY OHMS	PRIMARY IDENT.	SECONDARY OHMS	SECONDARY IDENT.
2	PRESELEKTOR	16.2		6.1	(B.C.)
				3.6	(S.W.)
6	1ST. I.F. COIL	10.4		9.9	
9	2ND. I.F. COIL	12.3		11.4	
16	VOICE COIL			3.5	
17	OUTPUT TRANS.	168.0		1.2	
32	OSC. COIL	1.8		7.4	(B.C.)
				5.2	(S.W.)
35	SPKR. FIELD	550		390	
43	PWR. TRANS.	160		.25	
				.17	
46	PWR. TRANS.	14.5	(110 V.)	480	
		17.0	(125 V.)	.25	
		23.0	(150 V.)	.17	
		47.0	(200 V.)		
		58.0	(225 V.)		
		71.0	(250 V.)		

PART	FUNCTION	PRIMARY OHMS	PRIMARY IDENT.	SECONDARY OHMS	SECONDARY IDENT.
45	PWR. TRANS.	16.2	(117 V.)	390	
		17.4	(125 V.)	.25	
				.17	
33	SPKR. FIELD	550			

SOCKET VOLTAGES

TUBE	STAGE	FIL.	PIN NO. PLATE	PIN NO. SCREEN	PIN NO.	BIAS	CATHODE
6A8G	DET.-OSC.	5.5	2 TO 7 — 135	1 TO 3 — 65	1 TO 4	-1.35	
6K7	I.F. AMPLIFIER	5.5	2 TO 7 — 135	1 TO 3 — 65	1 TO 4	-1.35	
6Q7G	2ND DET. 1ST A.F.	5.5	2 TO 7 — 55	1 TO 3		-.88	
6Y6G	OUTPUT A.F.	5.5	2 TO 7 — 130	1 TO 3 — 135	1 TO 4	-16.8	
5Y3G	RECTIFIER	4.6	2 TO 8				135

NOTE: ALL VOLTAGES EXCEPT BIAS ON 6Q7G & 6Y6G READ WITH 1000 OHM PER VOLT VOLTMETER FOR 117 VOLT LINE. BIAS ON 6Q7G & 6Y6G COMPUTED FROM I.R. DROP ACROSS POS. 37 & POS. 38.

©John F. Rider, Publisher

WESTINGHOUSE ELEC. & MFG. CO.

ELECTRICAL SPECIFICATIONS

Type and Number of Tubes ..... 1 #6A8G, 1 #6K7, 1 #6Q7G, 1 #6Y6G, 1 #5Y3G - Total 5
Power Supply Characteristics ..... 105-125 volts, 50-60 cycle A.C.
Power Consumption ..... 45 Watts
Total Power Output ..... 3.3 Watts
Undistorted Power Output ..... 1.6 Watts
Tuning Ranges ..... (Broadcast Band 535 to 1550 KC.
(Short-wave Band 1550 to 3600 KC.
Line-Up Frequencies ..... I.F. 455 KC., 1400 KC.

GENERAL DESCRIPTION

This model is a five-tube, alternating current, two-band superheterodyne receiver, designed to operate over the standard broadcast band extending from 535 to 1550 KC., and a short-wave band extending from 1550 to 3600 KC.

LINE-UP CAPACITOR ADJUSTMENTS

To properly align the circuits of this receiver, it is essential to use a high grade modulated test oscillator, the output of which can be continuously varied and reduced sufficiently to prevent overload as the individual circuits of the receiver are brought into alignment. A conventional output meter should be connected across the terminals of the speaker voice coil to indicate when the individual circuits are correctly aligned. The sensitivity of the meter must be sufficient to give satisfactory readings with low input signals.

Before attempting to align the receiver, the service man should familiarize himself with the general layout of the chassis, location of the various tubes and alignment condensers.

ALIGNMENT OF I.F. (455 KC.)

1. Set the volume control to maximum position, the wave-change switch to standard broadcast band, and the dial pointer to approximately 600 KC.

2. Connect the output meter across the voice coil terminals of the speaker.

3. Set the test oscillator to 455 KC., and adjust its output to produce a measureable reading on the output meter when the test signal is applied to the grid of the type 6A8G first detector-oscillator tube through a 0.5 mfd. blocking condenser.

4. Adjust the four I.F. trimmer condensers underneath the chassis (under the square coil housings) to maximum output.

ALIGNMENT OF OSCILLATOR AND R.F.

1. Check the pointer setting to be sure that it is exactly horizontal when the tuning condenser is completely closed.

2. Set the test oscillator and dial indicator to 1400 KC., and adjust the oscillator trimmer condenser (rear section of gang) to maximum output.

3. Apply the test signal to coil end of the antenna cable through a .0001 mfd. blocking condenser and adjust trimmer condenser (front section of gang) to maximum output.

4. Check sensitivity over the band.

5. Turn wave-change switch to the short-wave band and chock the sensitivity over scale.

TRAP ALIGNMENT

This receiver is provided with a tuned trap (top section of antenna coil near gang condenser) which is adjusted to eliminate signals at the I.F. frequency. This trimmer does not need to be adjusted unless there is code interference, in which case adjustment is made to eliminate the undesired signal. The models with the suffix "S" are built without the tuned trap. Viewing the antenna coil from the top, it will be seen that the five lugs are somewhat grouped. The first lug at the left of the open space is #1, #2-3-4-5 being counted in a clockwise direction. The models with the trap are connected: antenna to #1 lug, ground to #2 lug and the trimmer condenser between lugs #1 and #4. The models without the trap are connected: ground to #1 lug, antenna to #5 lug and the fixed condenser between lugs #4 and #5. One model may be readily converted to the other by obtaining the opposite type of condenser and making the above wiring changes.

PARTS LIST

Dia. #	Part #	Description of Parts	List Price
1	CS 9584	Antenna trimmer condenser	$ .15
1	CM 952	Antenna condenser - "S" models	.20
2	RC 95295	Antenna coil assembly	1.00
2	RC 95343	Antenna coil assembly - "S" models	$ 1.00
3	CG 9560	Variable gang condenser	3.25
4,29		Trimmer condenser - part of CG 9560	
5,7		I.F. trimmers - part of IC 95109	
6	IC 95109	1st I.F. transformer assembly	1.20
8,10		I.F. trimmers - part of IC 95110	
9	IC 95110	2nd I.F. transformer	1.20
11	RE 2243	220,000 ohm, 1/2 W. resistor	.10
12	CW 6-005	.005 mfd., 600 V. condenser	.15
13	SW 9572	Tone control switch	.40
14	CW 6-01	.01 mfd., 600 V. condenser	.15
15	CW 6-10	.1 mfd., 600 V. condenser	.20
16	DM 9526	Speaker diaphragm and voice coil assembly	1.50
17	TR 95139	Speaker output transformer	1.35
18	SK 9571	Speaker assembly	4.75
19	CW 9535	.1 mfd., 400 V. dual condenser	.30
20	RE 4733	47,000 ohm, 1/2 W. resistor	.10
21	RE 2233	22,000 ohm, 1/2 W. resistor	.10
22	RE 1053	1 meg., 1/2 W. resistor	.10
23	CM 9514	.0002 mfd. mica condenser	.15
24	RE 4733	47,000 ohm, 1/2 W. resistor	.10
25	CW 6-005	.005 mfd., 600 V. condenser	.15
26	VR 9553	1/2 meg. volume control and switch	1.00
27	CW 9535	.1 mfd., 400 V. dual condenser	.30
28	RE 4743	470,000 ohm, 1/2 W. resistor	.10
30	CM 9541	.0007 mfd. mica condenser	.15
31	SW 9572	Wave-change switch	.40
32	RC 95294	Oscillator coil assembly	.60
33	CE 9565	16 mfd., 175 V. electrolytic condenser	.65
34	RE 2203	22 ohm, 1/2 W. resistor	.10
35		Field coil (not serviced separately) - part of SK 9571	
36	CE 9564	16 mfd., 250 V. electrolytic condenser	.75
37	RE 2233	22,000 ohm, 1/2 W. resistor	.10
38	RE 2243	220,000 ohm, 1/2 W. resistor	.10
39	RE 5643	560,000 ohm, 1/2 W. resistor	.10
40	LP 9510	6-8 volt dial light	.20
41		Line switch - part of VR 9553	
42	CB 9512	Line cable and plug	.50
43	TR 95112	Power transformer 105-125 V., 50-60 cycle	4.00
44	TR 95136	Power transformer 105-125 V., 25 cycle	5.00
47	RE 1053	1 meg., 1/2 W. resistor	.10
51	CM 9513	.0001 mfd. mica condenser	.10
52	CW 2-10	.1 mfd., 200 V. condenser	.15
58	CW 6-002	.002 mfd., 600 V. condenser	.15

Part #	Description of Parts	List Price
	MISCELLANEOUS	
BA 9524	Speaker cardboard baffle - on cabinet	$ .05
CV 954	Tube shield	.10
CV 95232	Coil shield - 1st I.F.	.25
CV 95233	Coil shield - 2nd I.F.	.25
DS 9590	Dial scale only	.80
FP 101869	Felt foot (4 used)	.05
IS 95216	Rubber pulley on drive shaft	.05
KA 9589	Cabinet	
KN 95128	Knob (4 used)	.12
NT 958	3/8" Pal nut for volume control and switches	.05
PL 95123	Dial supporting plate	.30
PL 95114	Escutcheon plate with celluloid cover	1.50
PR 97160	Drive cord ..... Per Yard	.05
PU 9527	Brass dial drive pulley assembly	.25
SI 9575	Dial indicator pointer	.20
SO 956	Octal base tube socket (5 used)	.20
SO 9534	Dial light socket assembly	.12
SP 9551	Drive cord spring - on pulley PU 9527	.05
TU 95170	Insulation tube for electrolytic condenser	.05

©John F. Rider, Publisher

WILCOX-GAY CORP.

MODELS A3,A4
Chassis 5A6
Schematic, Socket

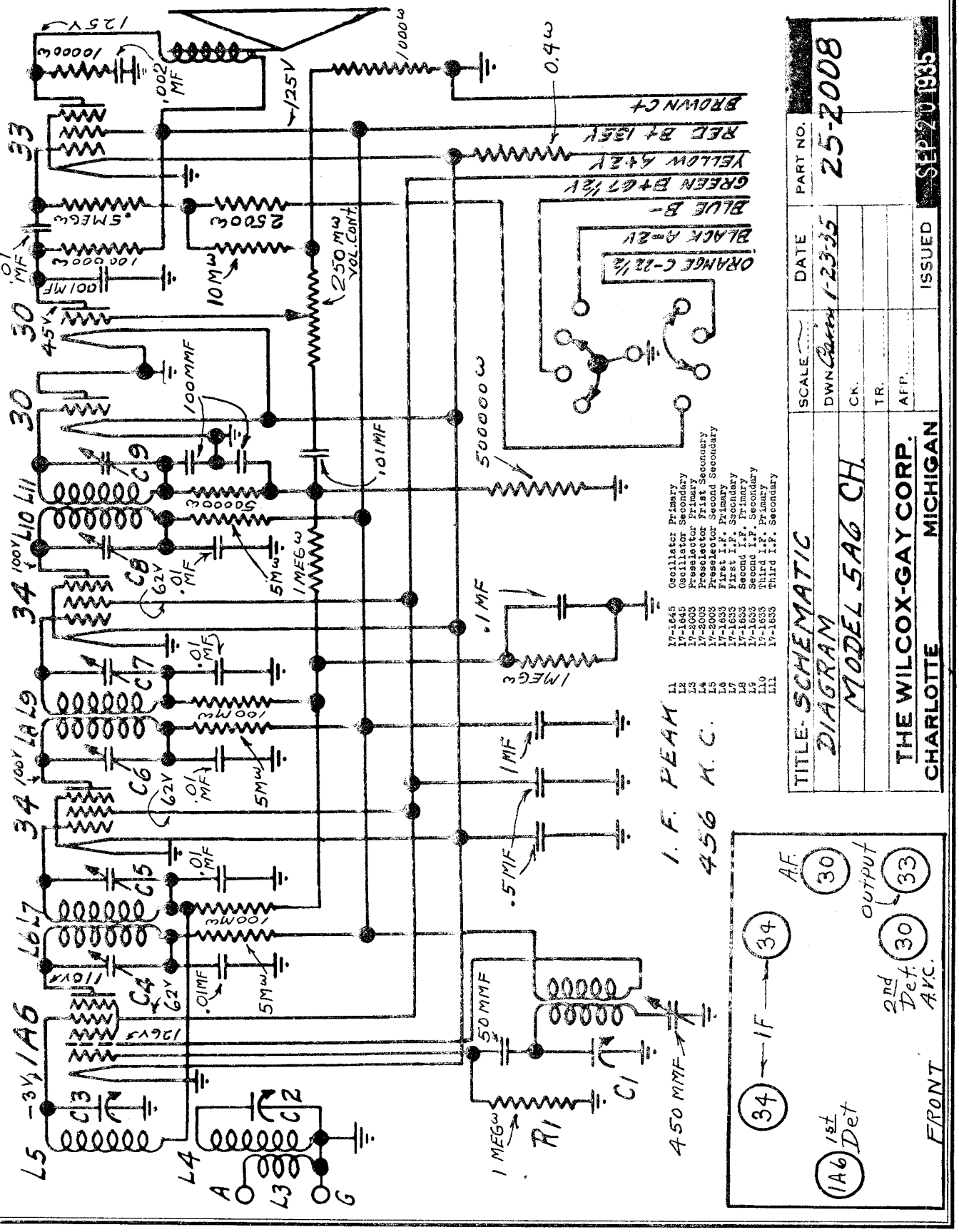

©John F. Rider, Publisher

MODELS A5,A6
Chassis 5F8
Schematic,Socket

WILCOX-GAY CORP.

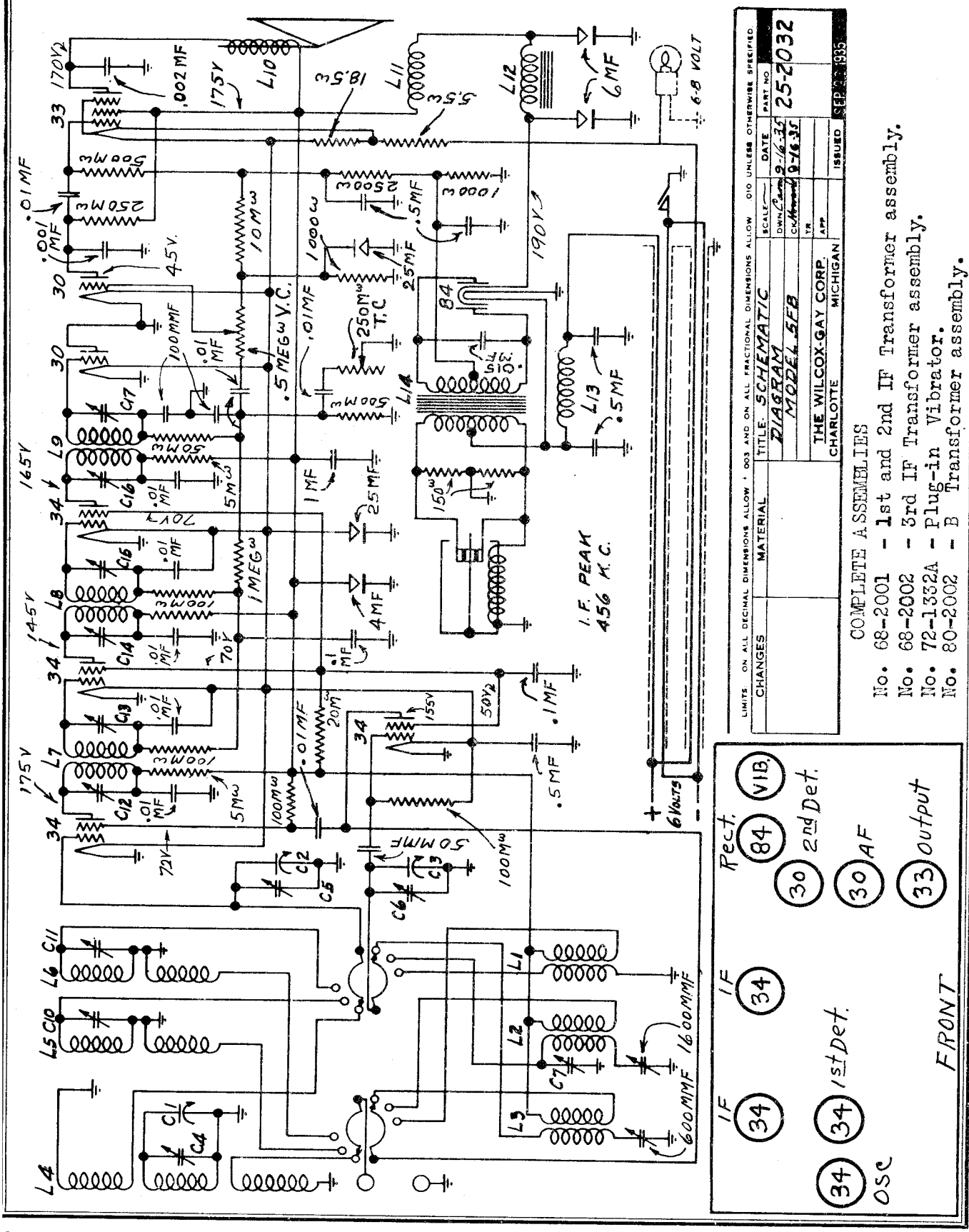

©John F. Rider, Publisher

WILCOX-GAY CORP.

MODEL 6T11
Schematic, Socket Parts

CHASSIS MODEL 6T11

FOR USE ONLY WITH
110-120 V . 50-60 CYCLE

PILOT LIGHTS 6-8 V
I. F. PEAK 456 K. C.

CODE	PART NO.	RESISTORS
R1	53-939	50,000 Ohm Oscillator Grid Resistor
R2	53-1062	250 Ohm Oscillator Cathode Resistor
R3	53-923	100,000 Ohm A.V.C. Network Resistor
R4	53-924	250,000 Ohm R.F. & I.F. Screen Resistor
R5	53-941	20,000 Ohm Oscillator Plate Resistor
R6	53-926	1 Meg. Ohm 6G5 Triode Plate Resistor
R7	53-1063	800 Ohm First I.F. Cathode Resistor
R8	53-923	1 Meg. Ohm A.V.C. Network Resistor
R9	53-1063	500 Ohm Second I.F. Cathode Resistor
R10	53-919	5,000 Ohm Second I.F. Plate Isolation Resistor
R11	53-898	60,000 Ohm Diode Filter Resistor
R12	53-924	250,000 Ohm Diode Load Resistor
R13	13-1231	500,000 Ohm Volume Control & Switch
R14	53-1144	2,000 Ohm 6F5's Cathode Resistor
R15	53-925	500,000 Ohm Inverter Grid Resistor
R16	53-924	250,000 Ohm Inverter Plate Resistor
R17	53-924	250,000 Ohm First Audio Plate Resistor
R18	13-1317	250,000 Ohm Tone Control
R19	53-925	500,000 Ohm First Position 6F6 Grid Resistor
R20	53-923	100,000 Ohm 6F5's Plate Hum Resistor
R21	53-920	10,000 Ohm Push-Pull Network Resistor
R22	53-925	500,000 Ohm Second Position 6F6 Grid Resistor
R23	53-1011	250 Ohm 6F6's Cathode Resistor
R24	53-919	5,000 Ohm 6A8 Plate Isolation Resistor
R25	53-919	5,000 Ohm First I.F. Plate Isolation Resistor
R26	53-929	250,000 Ohm Diode Load Resistor

CODE	PART NO.	CONDENSERS (Cont.)
C15	78-2016	70-120 MMFD. Third I.F. Primary Trimmer
C14	78-2016	70-120 MMFD. Third I.F. Secondary Trimmer
C15	76-2001	.0001 Mfd. Diode Filter Condenser
C16	76-2001	.0001 Mfd. Diode Filter Condenser
C17	75-2003	.01 Mfd. 400 V. Paper Audio Feed Condenser
C18	76-662	.002 Mfd. Mica First Audio Plate Filter Condenser
C19	75-2003	.01 Mfd. 400 V. Paper Audio Feed Condenser
C20	75-2003	.01 Mfd. 400 V. Paper Tone Control Condenser
C21	75-2006	.1 Mfd. 200 V. Paper Inverter Feed Condenser
C22	75-2011	.5 Mfd. 200 V. Paper 6F5's Plate Hum Condenser
C23	75-2006	.1 Mfd. 200 V. Paper Audio Feed Condenser
C24	18-721	8 Mfd. 450 V. Dry Electrolytic Filter Condenser
C25	18-2006	12 Mfd. 325 V. Wet Electrolytic Filter Condenser
C26	75-2003	.01 Mfd. 400 V. Paper Line By-Pass Condenser
C27	75-2006	.1 Mfd. 200 V. Paper A.V.C. Network By-Pass Cond.
C28	75-2013	1. Mfd. 400 V. Paper B. Supply By-Pass Condenser
C29	75-2003	.01 Mfd. 400 V. Paper Second I.F. Plate Isolation Cond.
C30	75-2006	.1 Mfd. 200 V. Paper Second I.F. Cathode By-Pass Cond.
C31	75-2006	.1 Mfd. 200 V. Paper First I.F. Cathode By-Pass Cond.
C32	75-2005	.1 Mfd. 200 V. Paper First Det. Cathode By-Pass Cond.
C33	76-2002	.00005 Mfd. Mica Oscillator Grid Condenser
C34	75-2005	.1 Mfd. 200 V. Paper A.V.C. Network By-Pass Cond.
C35	75-2013	1. Mfd. 400 V. Paper R.F. & I.F. Screen By-Pass Cond.
C36	75-2003	.01 Mfd. 400 V. Paper Osc. Plate Isolation Cond.
C37	75-2003	.01 Mfd. 6A8 Plate Isolation Condenser
C38	75-2003	.01 Mfd. First I.F. Plate Isolation Condenser

CODE	PART NO.	CONDENSERS
C1	77-1581	16-366 MMFD. Preselector Section of 3 Gang
C2	77-1581	16-366 MMFD. Preselector Section of 3 Gang
C3	77-1581	16-366 MMFD. Oscillator Section of 3 Gang
C4	78-1572	600 MMFD. Broadcast Oscillator Series Trimmer
C5	78-1572	1600 MMFD. Police Band Oscillator Series Trimmer
C6	78-1586	3-30 MMFD. Police Band Oscillator Parallel Trimmer
C7	78-1588	3-30 MMFD. Police Band Preselector Trimmer
C8	78-1588	3-30 MMFD. Foreign Band Preselector Trimmer
C9	78-2016	70-120 MMFD. First I.F. Primary Trimmer
C10	78-2016	70-120 MMFD. First I.F. Secondary Trimmer
C11	78-2016	70-120 MMFD. Second I.F. Primary Trimmer
C12	78-2016	70-120 MMFD. Second I.F. Secondary Trimmer

		INDUCTANCES
L1	17-2111	Broadcast Oscillator Coil Assembly
L2	17-2105	Police Band Oscillator Coil Assembly
L3	17-2098	Foreign Band Oscillator Coil Assembly
L4	17-2100	Broadcast Preselector Coil Assembly
L5	17-2104	Police Band Preselector Coil Assembly
L6	17-2096	Foreign Band Preselector Coil Assembly
L7	68-2027	First I.F. Transformer Assembly
L8	68-2013	Second I.F. Transformer Assembly
L9	68-2032	Third I.F. Transformer Assembly
L10	64-2039	Speaker, 1000 Ohm Field
L11	80-2019	Push-Pull Output Trans. for 2 - 6F6's
		Power Transformer

©John F. Rider, Publisher

MODEL 6T11
Alignment, Trimmers
Voltage

WILCOX-GAY CORP.

MODEL 6T11

SIGNAL GENERATOR CONNECTION	SIGNAL GENERATOR FREQUENCY	DIAL POSITION	WAVE BAND SWITCH POSITION	TRIMMER NUMBER	OUTPUT SIGNAL
Remove Grid Clip from 6A8					
Control Grid of 6A8	456 K.C.	1400 K.C.	Broadcast (Left)	1	Max. [1]
" " " "	" "	" "	" "	2	Max. [1]
" " " "	" "	" "	" "	3	Max. [1]
" " " "	" "	" "	" "	4	Max. [1]
" " " "	" "	" "	" "	5	Max. [1]
" " " "	" "	" "	" "	6 [2]	Max. [1]
Connect Grid Clip to 6A8					
* Antenna & Ground Posts	1400 K.C.	1400 K.C.	" "	7	Max. [1]
" "	" "	" "	" "	8	Max. [1]
" "	" "	" "	" "	9	Max. [1]
" "	600 "	600 "	" "	10	Max. [1]
" "	1400 "	1400 "	" "	7	Max. [1]
" "	600 "	600 "	" "	10	Max. [1]
" "	4.0 M.C.	4.0 M.C.	Police (Center)	11	Max. [1]
" "	" "	" "	" "	12	Max. [1]
" "	1.6 "	1.6 "	" "	13	Max. [1]
" "	4.0 "	4.0 "	" "	11	Max. [1]
" "	1.6 "	1.6 "	" "	13	Max. [1]
" "	14 "	14 "	Foreign (Right)	14	Max. [1]

Volume Control in "Full on" position at all times.

* Connect a standard dummy antenna between signal generator and receiver.

Note 1: Signal across primary of output transformer between 20 and 50 volts.

Note 2: Repeat above procedure and critically trim each adjustment to absolute resonance to insure perfect alignment. The I.F. sensitivity should be from 2 to 4 microvolts.

MODEL 6T11

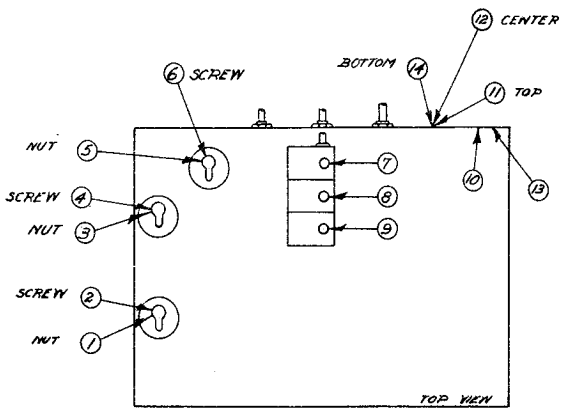

TUBE	CIRCUIT	PLATE TO GROUND	SCREEN TO GROUND	CATHODE TO GROUND	2 PLATE TO GROUND	2 GRID TO GROUND
6A8	Osc. & First Detector	280	62	1.5	200	- 15
6K7	I. F. Amplifier	270	62	1.8		
6K7	I. F. Amplifier	270	62	1.7		
6H6	2nd. Detector & AVC					
6F5	First Audio	100		1.3		
6F5	Inverter	100		1.3		
6F6	Output	270	278	18		
6F6	Output	270	278	18		
6G5	Tuning	20			TARGET 270	
80	Rectifier					
80	Rectifier					

B- Voltage 278
Speaker Field Voltage 105

Meter 1000 ohms per volt
750 volt scale

©John F. Rider, Publisher

MODELS 4B313, 4B355
Chassis 5410
Schematic, Parts

ZENITH RADIO CORP.

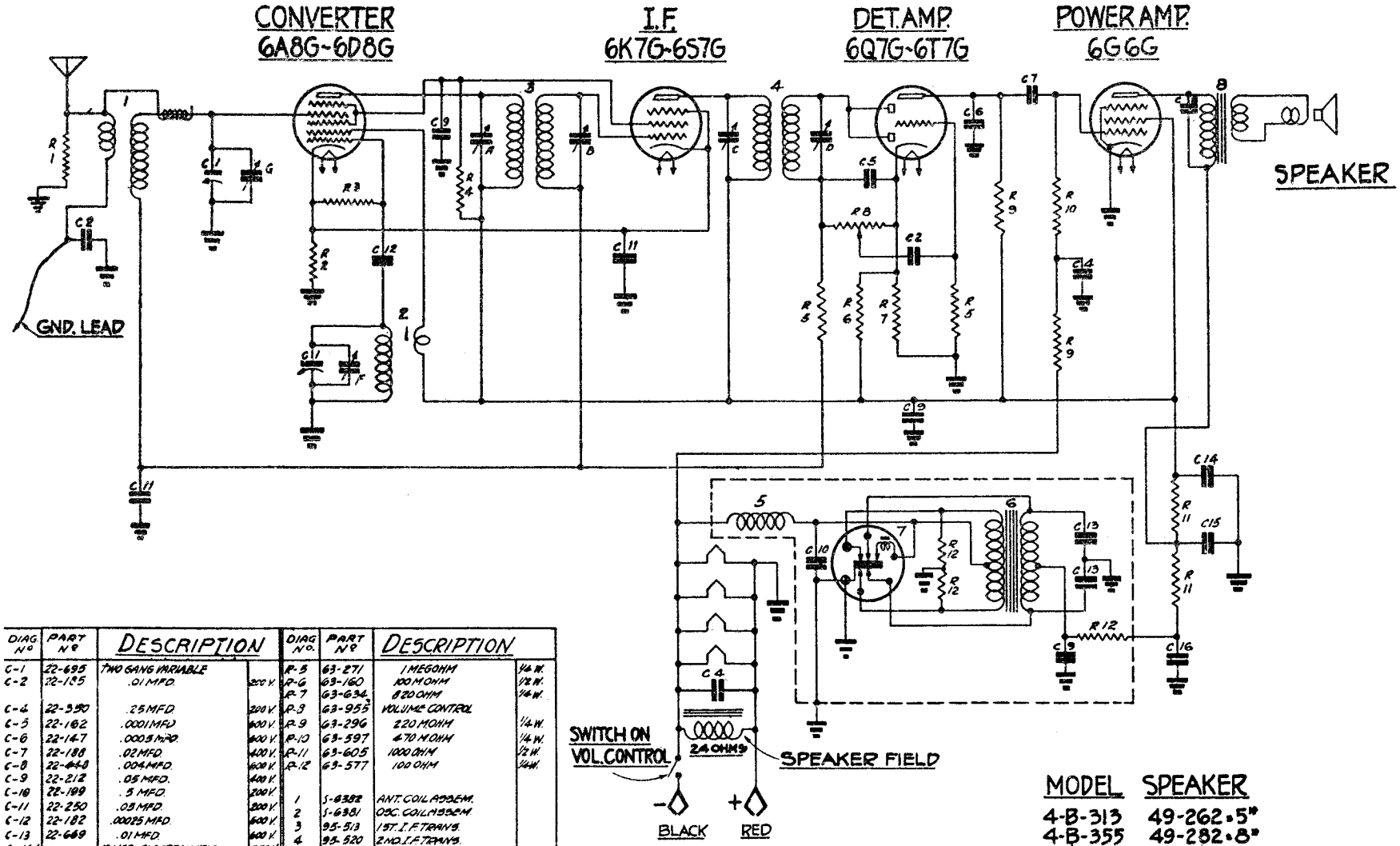

DIAG. Nº	PART Nº	DESCRIPTION	
C-1	22-695	TWO GANG VARIABLE	
C-2	22-185	.01 MFD.	200 V.
C-4	22-350	.25 MFD.	200 V.
C-5	22-162	.0001 MFD.	600 V.
C-6	22-147	.0005 MFD.	600 V.
C-7	22-188	.02 MFD.	400 V.
C-8	22-448	.004 MFD.	600 V.
C-9	22-212	.05 MFD.	400 V.
C-10	22-199	.5 MFD.	200 V.
C-11	22-250	.05 MFD.	200 V.
C-12	22-182	.00025 MFD.	600 V.
C-13	22-669	.01 MFD.	600 V.
C-14		10 MFD. ELECTROLYTIC	250 V.
C-15	22-739	15 MFD. "	250 V.
C-16		15 MFD. "	250 V.
R-1	63-587	4700 OHM	1/4 W.
R-2	63-629	330 OHM	1/4 W.
R-3	63-583	47 M. OHM	1/4 W.
R-4	63-960	68 M. OHM	1/2 W.

DIAG. Nº	PART Nº	DESCRIPTION	
R-5	63-271	1 MEGOHM	1/4 W.
R-6	63-160	100 M. OHM	1/2 W.
R-7	63-634	820 OHM	1/4 W.
R-8	63-955	VOLUME CONTROL	
R-9	63-296	220 M. OHM	1/4 W.
R-10	63-597	470 M. OHM	1/4 W.
R-11	63-605	1000 OHM	1/2 W.
R-12	63-577	100 OHM	1/4 W.
1	S-6382	ANT. COIL ASSEM.	
2	S-6381	OSC. COIL ASSEM.	
3	95-513	1ST. I.F. TRANS.	
4	95-520	2ND. I.F. TRANS.	
5	S-5043	CHOKE-COIL ASSEM.	
6	95-552	POWER TRANS.	
7	190-6	VIBRATOR	
8		SPEAKER TRANS.	
A		1ST. I.F. TRANS. PRI.	
B		1ST. I.F. TRANS. SEC.	
C		2ND. I.F. TRANS. PRI.	
D		2ND. I.F. TRANS. SEC.	
F		BROADCAST OSC. (ON GANG)	
G		ANT. BROADCAST (ON GANG)	

MODEL	SPEAKER
4-B-313	49-262 • 5"
4-B-355	49-282 • 8"

I.F. FREQUENCY 455 K.C.
4 TUBE SUPERHETERODYNE
CHASSIS Nº 5410 - 6V - SINGLE BAND
ZENITH RADIO CORPORATION
CHICAGO, ILLINOIS

©John F. Rider, Publisher

©John F. Rider, Publisher

6A8G OR 6D8G
1ST. DET.-OSC.

6K7G OR 6S7G
I.F.AMP.

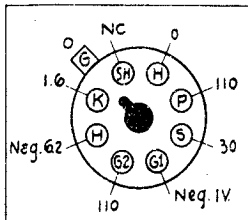

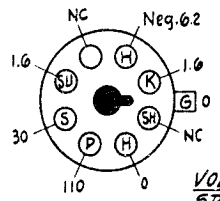

LEGEND
NC=NO CONNECTION

VOLTAGE ACROSS SPEAKER FIELD-6V.

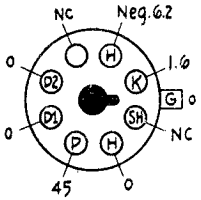

2ND. DET. AVC.-1ST. AUDIO
6Q7G OR 6T7G

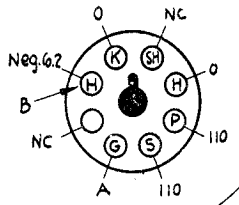

BOTTOM VIEW OF CHASSIS

FRONT OF CHASSIS

6G6G
OUTPUT

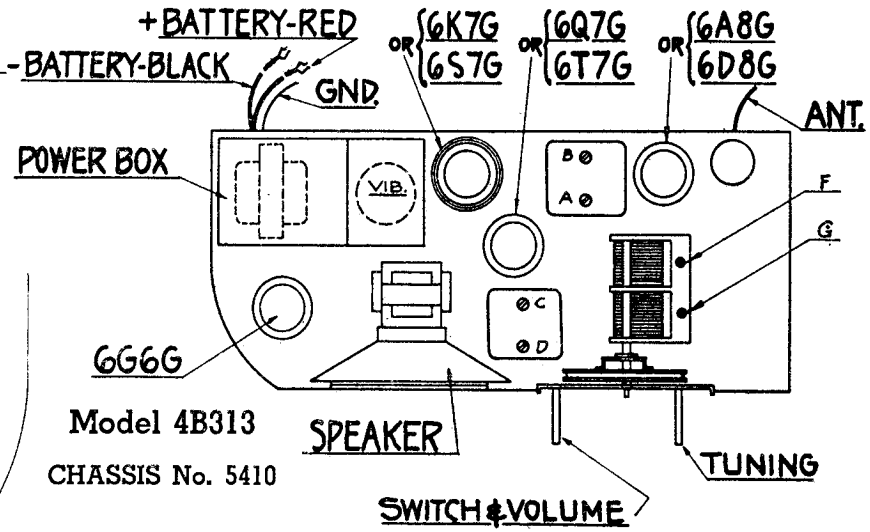

Model 4B313
CHASSIS No. 5410

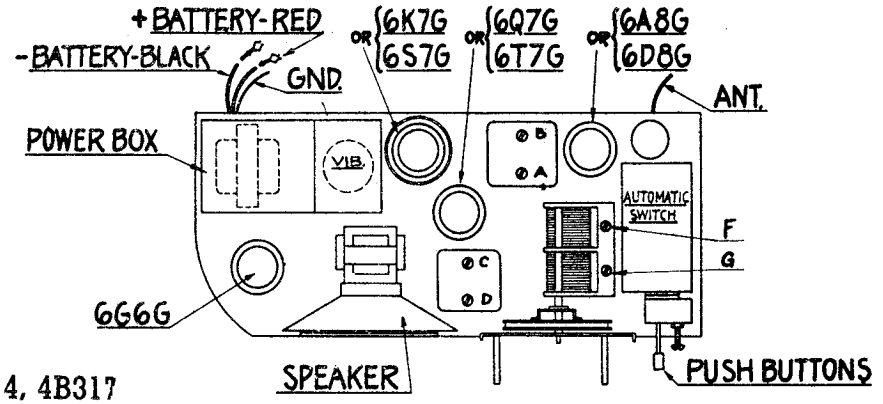

Models 4B314, 4B317
CHASSIS No. 5411

Location of Tubes and Trimmers

NOTE

Voltages measured with a 1000 ohm per volt meter from chassis to socket contacts. Antenna disconnected — volume control on full.

Battery Voltage at chassis 6.2 v.

Battery Consumption 2.3 ampere.

(A) Bias for 6G6 measured from point "B" to chassis.

ALIGNMENT PROCEDURE

Operation	Connect Test Oscillator to	Dummy Antenna	Set Test Osc. to	Band	Set Dial At	Adjust Trimmers	Purpose
1	1st Det. Grid	1/2 Mfd.	455	Br'dc't	600	ABCD	I. F. Aligment
2	Rec. Ant. Lead	200 Mmfd.	1500	"	1500	F	Set Osc. to Scale
3	" " "	200 Mmfd.	1500	"	1500	G	Al'gment of Ant.

ZENITH RADIO CORP.

MODELS 4B314, 4B317
Chassis 5411
Schematic, Parts

FOR TUNER DATA, SEE SPECIAL SECTION

MODEL	SPEAKER
4-B-314	49-262 : 5"
4-B-317	49-262 : 5"

I.F. FREQUENCY 455 K.C.
4 TUBE SUPERHETERODYNE
CHASSIS № 5411 – 6V- SINGLE BAND
ZENITH RADIO CORPORATION
CHICAGO, ILLINOIS

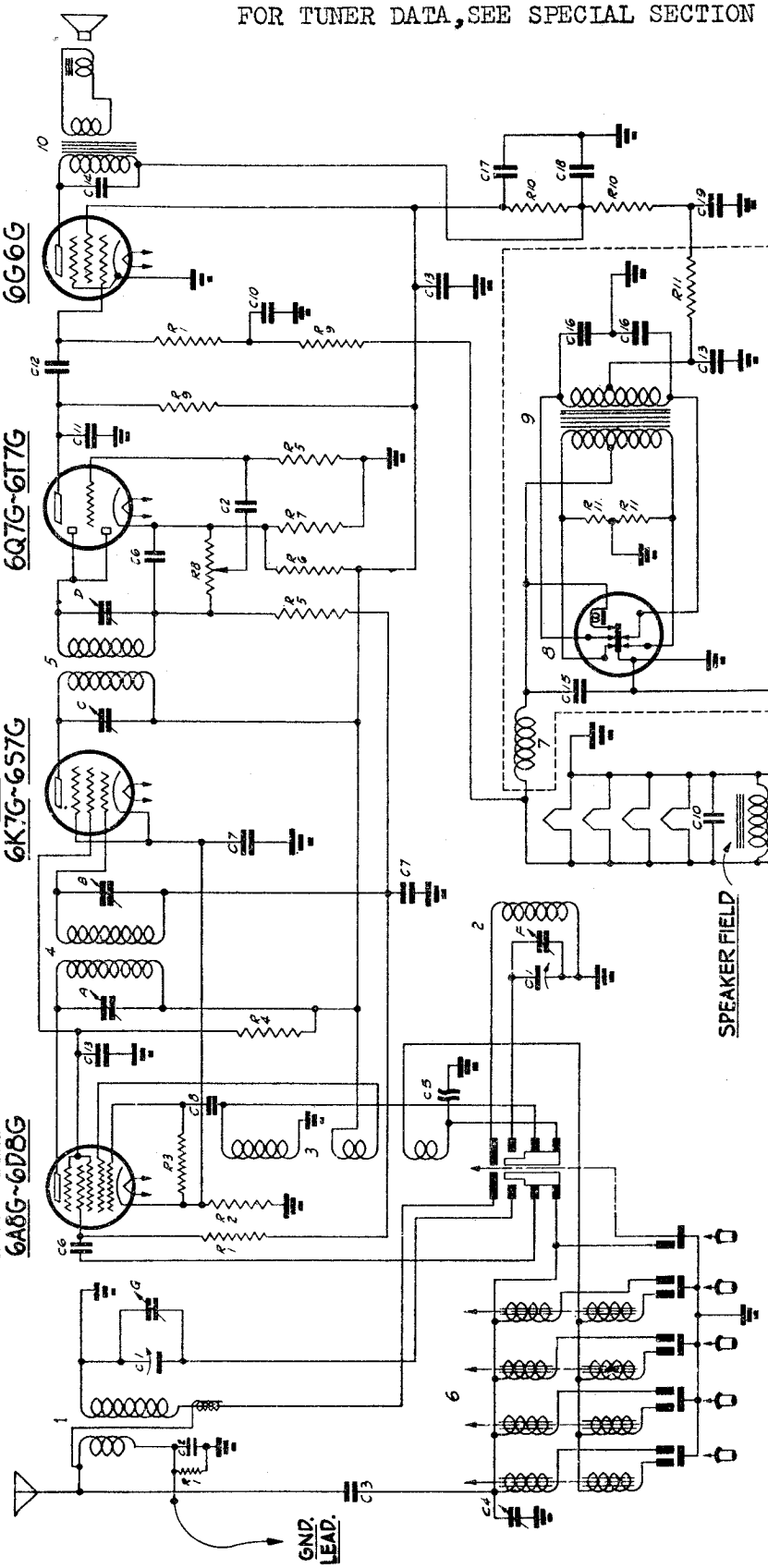

NOTE-MANUAL AUTOMATIC SWITCH SHOWN IN AUTOMATIC POSITION-

DIAG NO.	PART NO.	DESCRIPTION		DIAG NO	PART NO	DESCRIPTION		DIAG NO.	PART NO.	DESCRIPTION
C-1	22-695	TWO GANG VARIABLE	200V	R-1	63-597	470 OHM	1/4 W	4	95-513	1ST I.F. TRANS
C-2	22-185	.01 MFD	600V	R-2	63-629	330 OHM	1/4 W	5	95-520	2ND I.F. TRANS
C-3	22-229	.50 MMFD		R-3	63-593	47 M OHM	1/4 W	6		
C-4	22-519	TRIMMER CONDENSER		R-4	63-960	68 M OHM	1/2 W	7	J-5043	CHOKE ASSEM
C-5	22-729	COMPENSATING CONDENS.	600V	R-5	63-271	1 MEGOHM	1/4 W	8	190-6	VIBRATOR
C-6	22-162	.0001 MFD	600V	R-6	63-160	100 M OHM	1/2 W	9	95-532	POWER TRANS
C-7	22-250	.05 MFD	200V	R-7	63-634	82 OHM	1/4 W	10		SPEAKER TRANS
C-8	22-182	.00025 MFD	600V	R-8	63-955	220 M OHM VOL CONT				
C-9	22-243	.01 MFD	400V	R-9	63-296	22 M OHM	1/4 W	A		1ST I.F. TRANS PRI
C-10	22-350	.25 MFD	200V	R-10	63-605	100 OHM	1/2 W	B		1ST I.F. TRANS SEC
C-11	22-147	.0005 MFD	600V	R-11	63-577	100 OHM	1/4 W	C		2ND I.F. TRANS PRI
C-12	22-188	.02 MFD	400V					D		2ND I.F. TRANS SEC
C-13	22-212	.05 MFD	400V					E		BROADCAST OSC (WIRING)
C-14	22-444	.004 MFD	600V					F		ANT. BROADCAST (WIRING)
C-15	22-199	.5 MFD	200V					G		
C-16	22-669	.01 MFD	600V							
C-17		10 MFD ELECTROLYTIC	250V	1	J-6560	ANTENNA COIL ASSEM.				
C-18	22-739	15 MFD	250V	2	J-6039	OSC COIL ASSEM.				
C-19		1.5 MFD	250V	3	20-187	COMPENSATING COIL				

©John F. Rider, Publisher

MODELS 6D311, 6D326, 6D336
6D360. Chassis 5646
Schematic, Parts, Voltage
Socket, Trimmers, Alignment

ZENITH RADIO CORP.

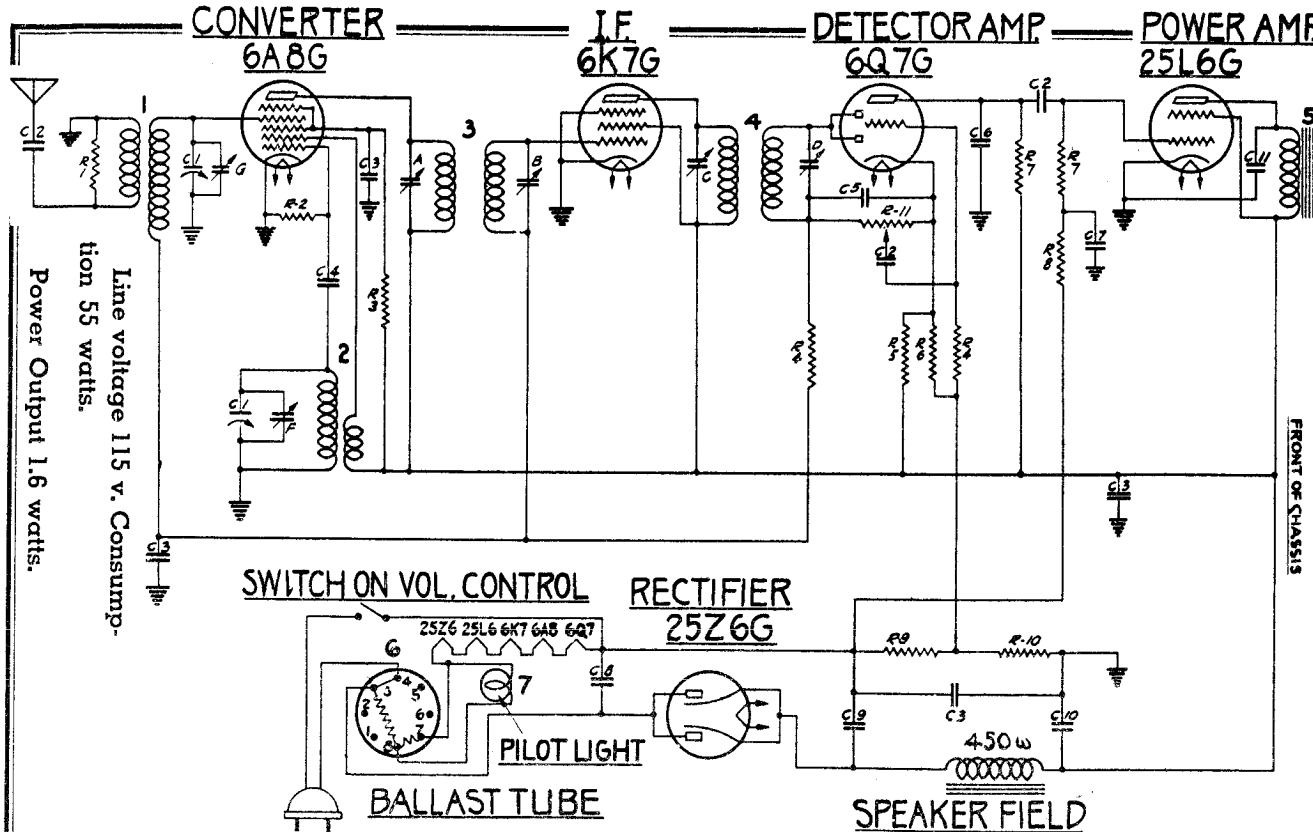

Line voltage 115 v. Consumption 55 watts.

Power Output 1.6 watts.

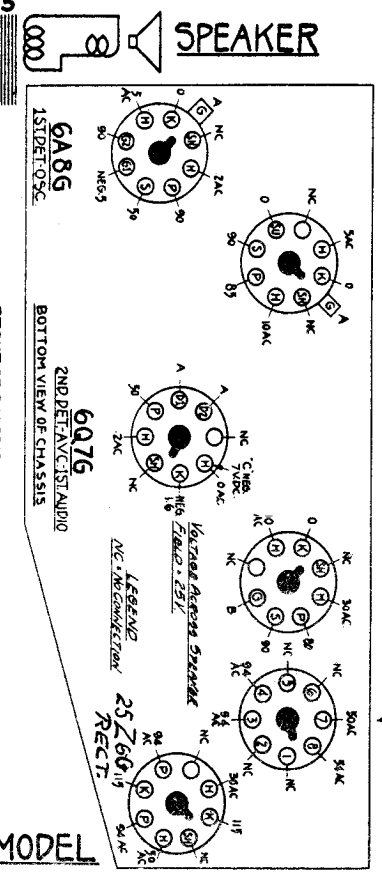

(A) Bias for 6A8 — 6K7 and 6Q7 measured at 6Q7 cathode.

DIAG. Nº	PART Nº	DESCRIPTION		DIAG Nº	PART Nº	DESCRIPTION		DIAG Nº	PART Nº	DESCRIPTION
C-1	22-679	TWO GANG VARIABLE COND.		R-3	63-643	18 M. OHM	1/4W	2	5-5938	OSCILLATOR COIL ASSEM.
C-2	22-196	.01 MFD.	600V	R-4	63-271	1 MEG OHM	1/4W	3	95-513	1ST. I.F. TRANSFORMER
C-3	22-250	.05 MFD.	200V	R-5	63-681	56 M OHM	1/2W	4	95-514	2ND. I.F. TRANSFORMER
C-4	22-182	.00025 MFD.	600V	R-6	63-633	680 OHM	1/4W	5		SPEAKER TRANSFORMER
C-5	22-162	.0001 MFD.	600V	R-7	63-296	220 M OHM	1/4W	6	100-70	BALLAST TUBE - 115V
C-6	22-147	.0005 MFD.	600V	R-8	63-595	100 M OHM	1/4W	7	100-36	PILOT LIGHT .25A-6.3V
C-7	22-327	.02 MFD.	200V	R-9	63-557	60 OHM WIREWOUND	1/2W	A		1ST. I.F. TRANS. PRI
C-8	22-435	.02 MFD.	600V	R-10	63-954	50 OHM WIREWOUND	1/2W	B		1ST. I.F. TRANS. SEC.
C-9	22-681	40 MFD. ELECTROLYTIC	150V	R-11	63-953	220 M OHM VOL. CONTROL		C		2ND. I.F. TRANS. PRI.
C-10	22-680	16 MFD. ELECTROLYTIC	150V					D		2ND. I.F. TRANS. SEC.
C-11	22-730	.04 MFD.	600V							
R-1	63-587	4700 OHM	1/4W	1	5-580T	ANTENNA COIL ASSEM.		F		BR'DCAST OSC. (ON GANG)
R-2	63-593	47 M OHM	1/4W					G		ANT. BR'DCAST (ON GANG)

SPEAKER	MODEL
49-237-5 INCH.	6D-311
49-237-5 »	6D-326
49-237-5 »	6D-336
49-241-6 »	6D-360

(B) Bias for 26L6 measured between "C" at 6Q7 socket and chassis.

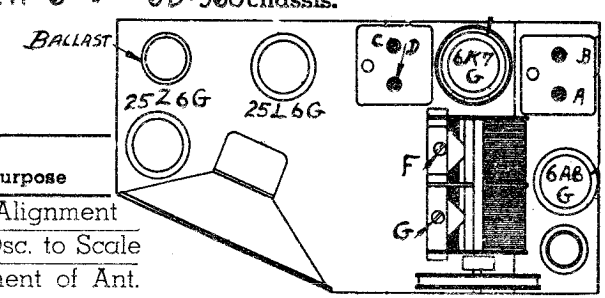

ALIGNMENT PROCEDURE

Operation	Connect Test Oscillator to	Dummy Antenna	Set Test Osc. to	Band	Set Dial At	Adjust Trimmers	Purpose
1	1st Det. Grid	1/2 Mfd.	455	Br'dc't	600	ABCD	I. F. Alignment
2	Rec. Ant. Lead	200 Mmfd.	1500	"	1500	F	Set Osc. to Scale
3	" " "	200 Mmfd.	1500	"	1500	G	Al'gment of Ant.

©John F. Rider, Publisher

MODEL 5J217T
Chassis 5524T
Schematic, Parts

ZENITH RADIO CORP.

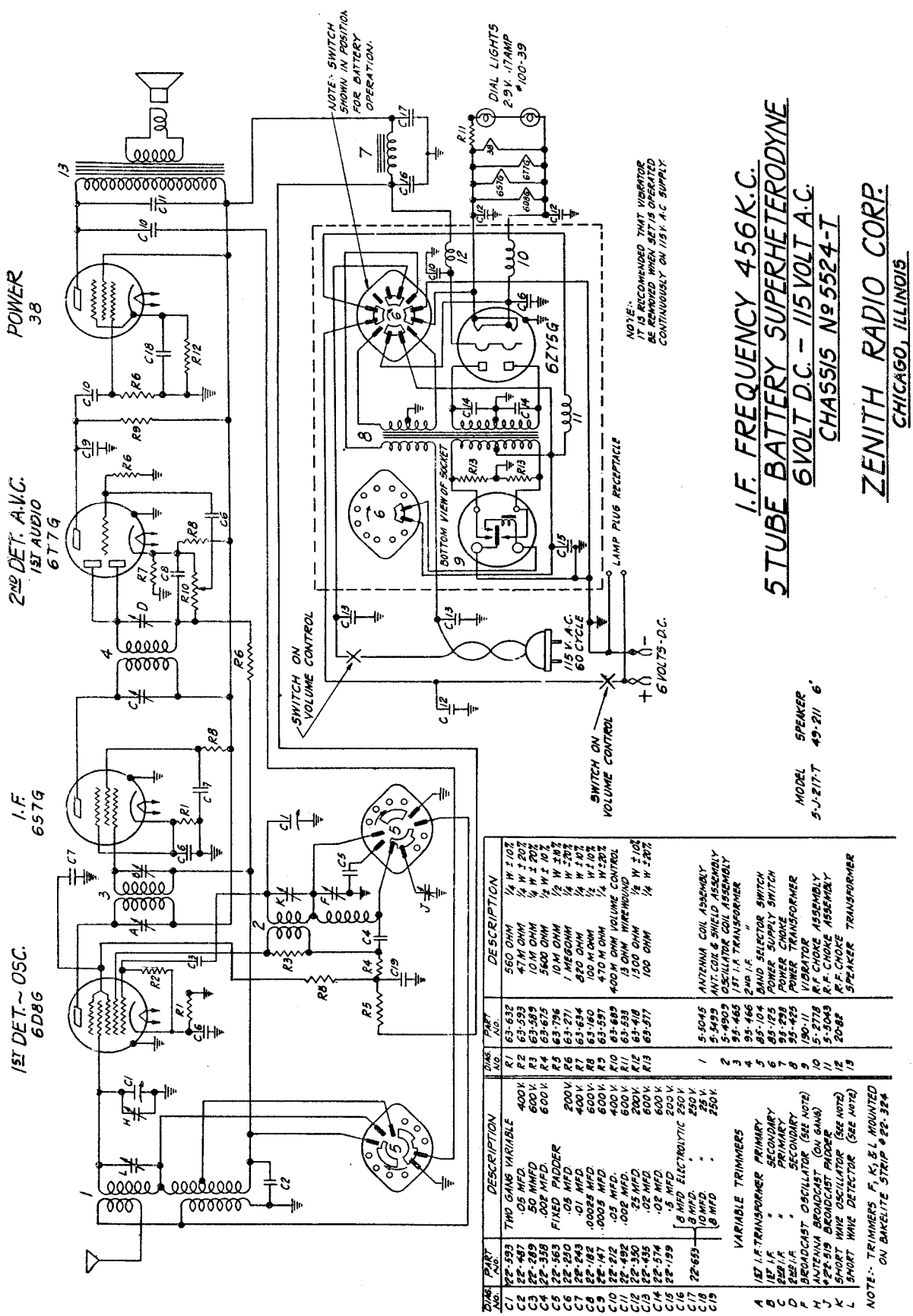

I.F. FREQUENCY 456 K.C.
5 TUBE BATTERY SUPERHETERODYNE
6 VOLT D.C. – 115 VOLT A.C.
CHASSIS No 5524-T

ZENITH RADIO CORP.
CHICAGO, ILLINOIS

MODEL 5-J-217-T — SPEAKER 49-211 6'

SYMBOL NO.	PART NO.	DESCRIPTION		SYMBOL NO.	PART NO.	DESCRIPTION	
C1	22-393	TWO GANG VARIABLE	400 V.	R1	63-632	560 OHM	1/4 W ± 10%
C2	22-487	.05 MFD.	600 V.	R2	63-593	47 M OHM	1/4 W ± 20%
C3	22-289	.00 MMFD.	600 V.	R3	63-589	10 M OHM	1/4 W ± 20%
C4	22-338	.002 MFD.	600 V.	R4	63-615	3600 OHM	1/2 W ± 10%
C5	22-563	FIXED PADDER	200 V.	R5	63-796	10 M OHM	1/2 W ± 20%
C6	22-230	.05 MFD.	400 V.	R6	63-271	1 MEGOHM	1/4 W ± 20%
C7	22-243	.01 MFD.	600 V.	R7	63-634	820 OHM	1/4 W ± 10%
C8	22-182	.00025 MFD.	600 V.	R8	63-160	100 M OHM	1/4 W ± 10%
C9	22-147	.0005 MFD.	600 V.	R9	63-591	470 M OHM	1/4 W ± 20%
C10	22-212	.05 MFD.	400 V.	R10	63-685	400 M OHM VOLUME CONTROL	
C11	22-492	.002 MFD.	600 V.	R11	63-559	13 OHM WIREWOUND	1/2 W ± 10%
C12	22-350	.25 MFD.	200 V.	R12	63-618	1500 OHM	1/2 W ± 20%
C13	22-435	.02 MFD.	600 V.	R13	63-577	100 OHM	1/4 W ± 20%
C14	22-574	.01 MFD.	600 V.				
C15	22-199	.5 MFD.	200 V.				
C16		8 MFD. ELECTROLYTIC	250 V.	1	5-5045	ANTENNA COIL ASSEMBLY	
C17	22-623	8 MFD. "	250 V.	1	5-5499	ANT. COIL & SHIELD ASSEMBLY	
C18		10 MFD. "	25 V.	2	5-4909	OSCILLATOR COIL ASSEMBLY	
C19		8 MFD "	250 V.	2	95-465	1ST I.A. TRANSFORMER	
		VARIABLE TRIMMERS		4	95-466	2ND I.F. "	
A		1ST I.F. TRANSFORMER PRIMARY		5	85-104	BAND SELECTOR SWITCH	
B		1ST I.F. " SECONDARY		6	85-125	POWER SUPPLY SWITCH	
C		2ND I.F. " PRIMARY		7	95-238	POWER CHOKE	
D		2ND I.F. " SECONDARY		8	95-425	POWER TRANSFORMER	
E		BROADCAST OSCILLATOR (SEE NOTE)		9	190-11	VIBRATOR	
F		ANTENNA BROADCAST (ON GANG)		10	5-2778	R.F. CHOKE ASSEMBLY	
J	22-519	BROADCAST PADDER		11	5-3043	R.F. CHOKE ASSEMBLY	
K		SHORT WAVE OSCILLATOR (SEE NOTE)		12	20-82	R.F. CHOKE	
L		SHORT WAVE DETECTOR (SEE NOTE)		13		SPEAKER TRANSFORMER	

NOTE:- TRIMMERS F, K, & L MOUNTED ON BAKELITE STRIP # 22-324

©John F. Rider, Publisher

MODEL 5J217T
Chassis 5524T

ZENITH RADIO CORP.

Socket, Trimmers
Voltage, Alignment

SOCKET VOLTAGES

Tube	Position	1	2	3	4	5	6	7	8	9
6D8	Converter Osc.	0	0	129	42.5	—2	110	6.3	1.5	0
6S7	I. F.	0	0	130	42.5	1.5	—	6.3	1.5	0
6T7	2nd Det. A.V.C. 1st Audio	0	0	23	.1	.1	—	6.3	.5	0
6ZY5G	Rect.	0	6.3	—3.5	—	—3.5	—	0	140	—
		H	P	S	K	H	G			
38	Power	0	124	129	12	6.3	0			

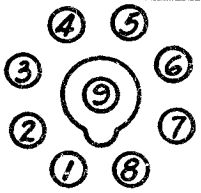

BOTTOM VIEW OF SOCKET

All voltages measured from point indicated to ground using a 1000 Ohm per Volt meter, antenna and ground disconnected. Line voltage 117V. Consumption 16W. Battery voltage 6.3V consumption 2.1 Amp. Power Output .84W.

ALIGNMENT PROCEDURE

Operation	Connect Test Oscillator to—	Dummy Antenna	Set Test Osc. to	Band	Set Dial At	Adjust Trimmers	Purpose
1	1st Det. Grid	1/2 Mfd.	456	Br'dc't	600	ABCD	I. F. Alignment
2	Rec. Ant. Lead	200 Mmfd.	1500	"	1500	F	Set Osc. to Scale
3	" " "	200 Mmfd.	1500	"	1500	G	Al'gment of Ant.
4	" " "	200 Mmfd.	600	"	600	J	Rock gang & adj. for max. output.
5				"		FG	Repeat 2 & 3.
6	Rec. Ant. Lead	400 Ohms	18000	S.W.	18000	K	Set Osc. to Scale
7	" " "	400 Ohms	16500	S.W.	16500	L	Rock gang & adj. for max. output.

LOCATION OF TRIMMERS

Chassis No. 5524T

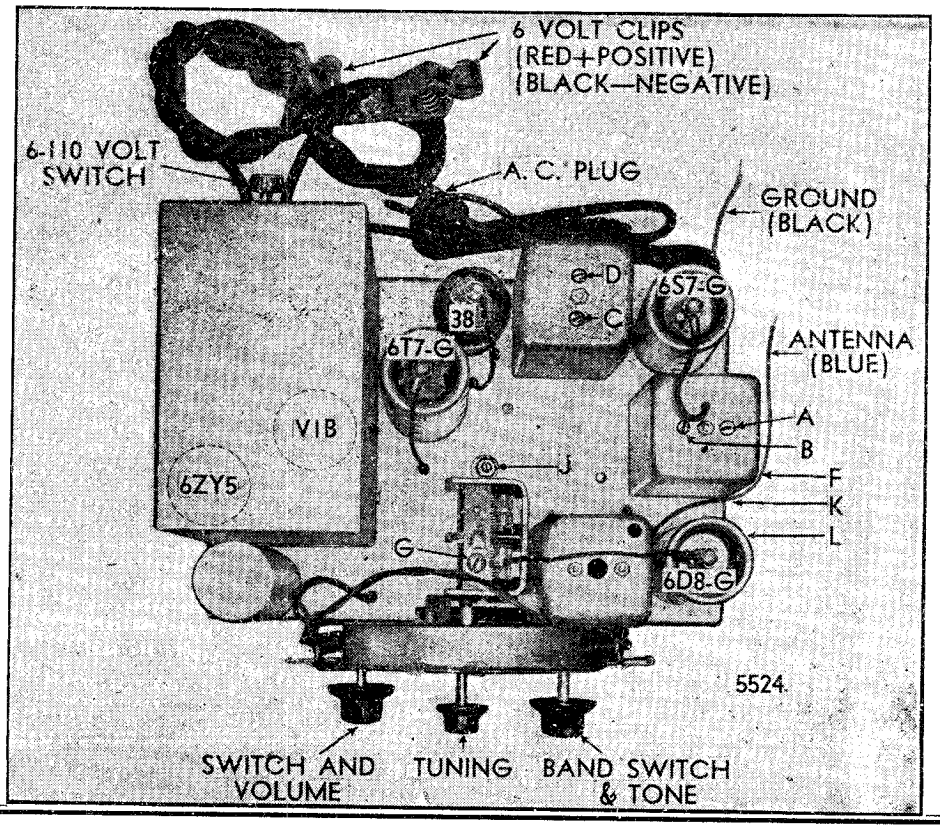

©John F. Rider, Publisher

ZENITH RADIO CORP.

MODELS 5R312, 5R316, 5R317
5R337, 5R303
Chassis 5528
Schematic, Parts

FOR TUNER DATA, SEE SPECIAL SECTION

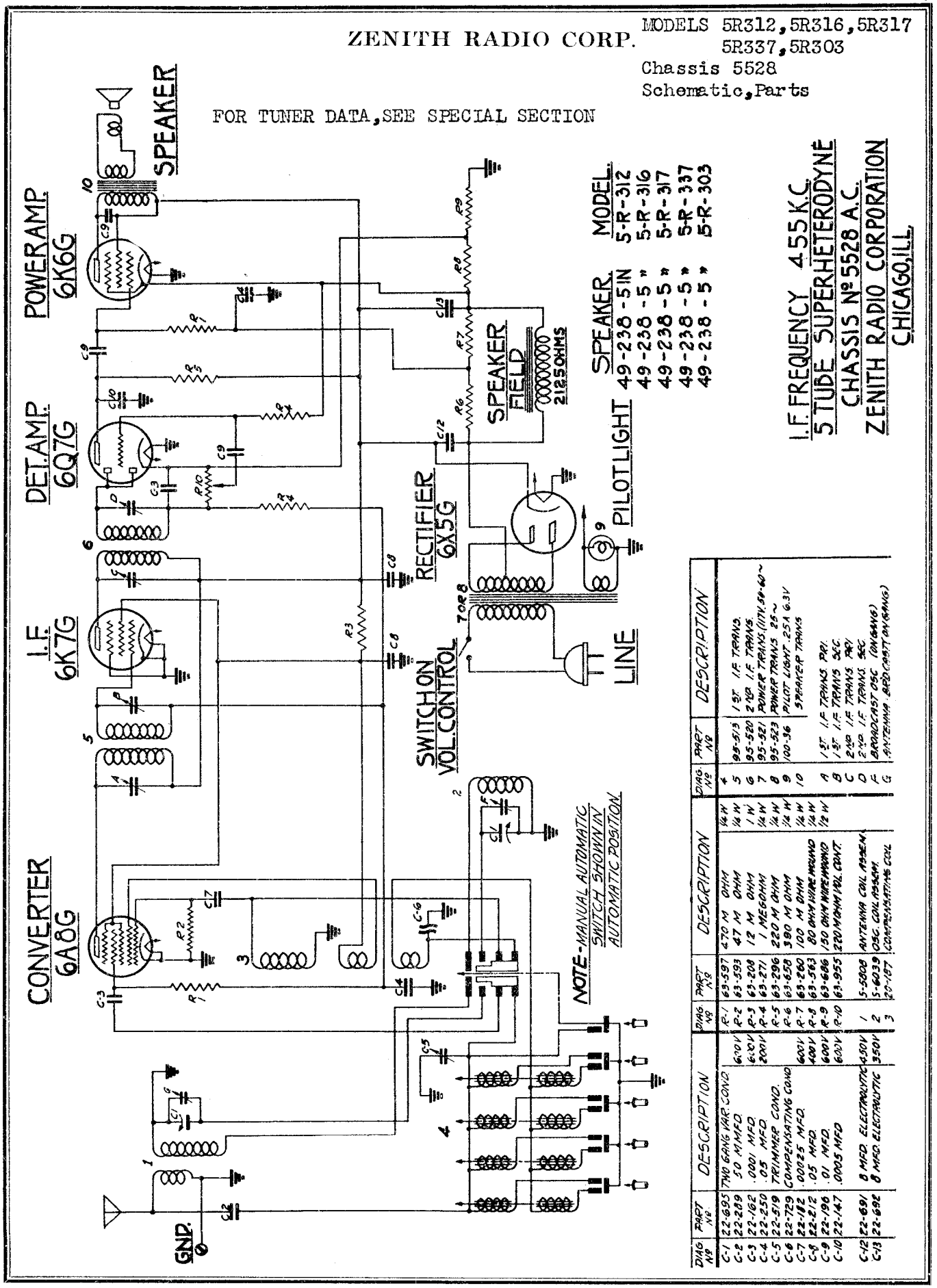

SPEAKER	MODEL
49-238-5 IN	5-R-312
49-238-5 "	5-R-316
49-238-5 "	5-R-317
49-238-5 "	5-R-337
49-238-5 "	5-R-303

I.F. FREQUENCY 455 K.C.
5 TUBE SUPERHETERODYNE
CHASSIS Nº 5528 A.C.
ZENITH RADIO CORPORATION
CHICAGO, ILL.

DIAG Nº	PART Nº	DESCRIPTION		DIAG Nº	PART Nº	DESCRIPTION		DIAG Nº	PART Nº	DESCRIPTION
C-1	22-695	TWO GANG VAR. COND.		R-1	63-597	470 M OHM	1/4 W	4		
C-2	22-289	50 M.M.FD.	600V	R-2	63-593	47 M OHM	1/4 W	5	95-513	1ST. I.F. TRANS.
C-3	22-162	.0001 MFD.	600V	R-3	63-208	12 M OHM	1 W	6	95-520	2ND I.F. TRANS.
C-4	22-250	.05 MFD.	200V	R-4	63-271	1 MEGOHM	1/4 W	7	95-521	POWER TRANS. (117V. 50-60~
C-5	22-519	TRIMMER COND.		R-5	63-296	220 M OHM	1/4 W	8	95-523	POWER TRANS. 25~
C-6	22-729	COMPENSATING COND.		R-6	63-658	390 M OHM	1/4 W	9	100-56	PILOT LIGHT .25A 6.3V
C-7	22-182	.00025 MFD.	600V	R-7	63-260	100 M OHM	1/4 W	10		SPEAKER TRANS
C-8	22-812	.05 MFD.	400V	R-8	63-563	80 OHM WIREWOUND	1/2 W	A		1ST. I.F. TRANS PRI.
C-9	22-196	.01 MFD.	600V	R-9	63-686	150 OHM WIREWOUND		B		1ST. I.F. TRANS SEC
C-10	22-147	.0005 MFD	600V	R-10	63-955	220 M OHM VOL CONT.		C		2ND I.F. TRANS PRI
								D		2ND I.F. TRANS SEC
C-12	22-691	8 MFD ELECTROLYTIC	450V	1	5-5808	ANTENNA COIL ASSEM.		E		BROADCAST OSC (ON 6A8G)
C-13	22-692	8 MFD ELECTROLYTIC	350V	2	5-6039	OSC. COIL ASSEM.		F		ANTENNA BEO. (ON 6A8G)
				3	20-187	COMPENSATING COIL		G		

©John F. Rider, Publisher

MODELS 5R303, 5R312, 5R316
5R317, 5R337
Chassis 5528
Socket, Trimmers, Voltage
Alignment

ZENITH RADIO CORP.

SOCKET VOLTAGES

NOTE

Voltages measured with a 1000 ohm per volt meter from chassis to socket contacts. Antenna disconnected — volume control on full.

Line voltage 115 v. Consumption 45 watts.

Power output 3.5 watts.

(A) Bias for 6A8 — 6K7 and diodes of 6Q7 measured across resistor R9.

(B) Bias for triode section of 6Q7 and 6K6 measured across R8 and R9.

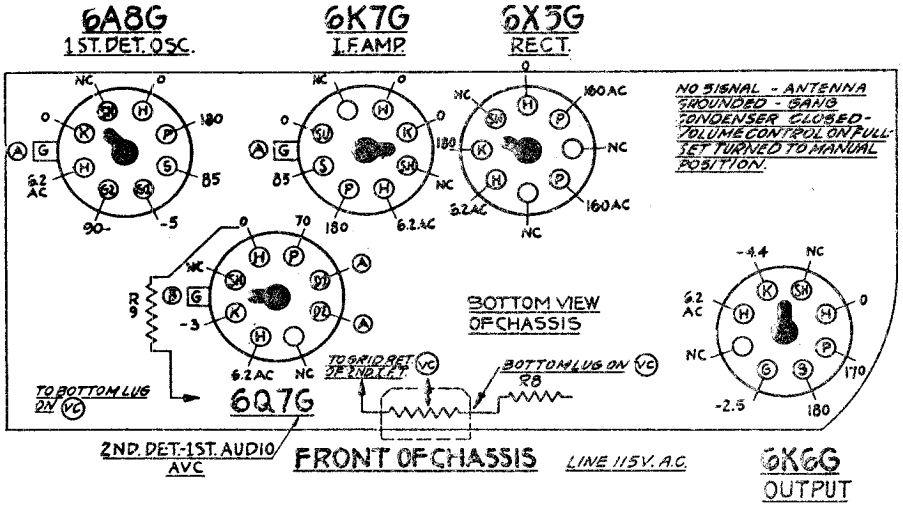

LEGEND

NC — No Connection
VC — Volume Control
SH — Shield
H — Heater
P — Plate
S — Screen
G — Grid
SU — Suppressor
D — Diode
K — Cathode
F — Filament

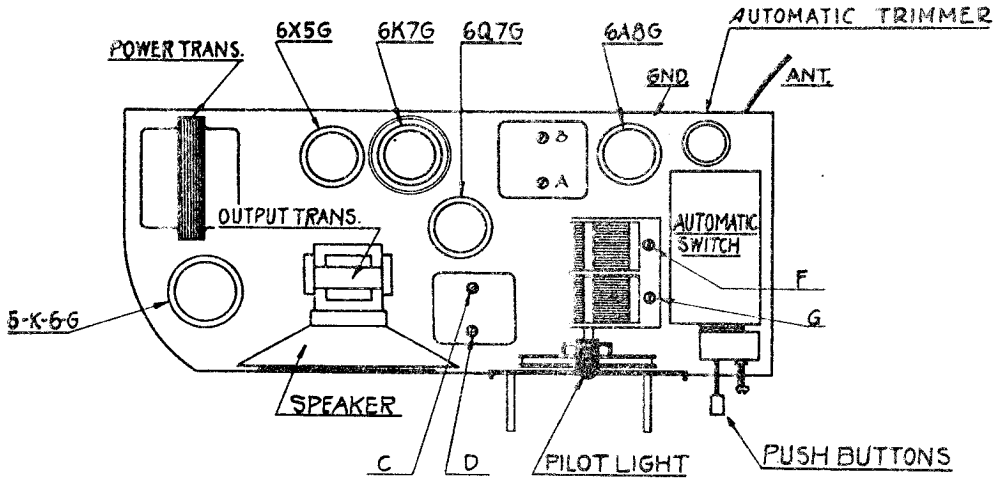

Location of Tubes and Trimmers

Models 5R303, 5R312, 5R316, 5R317, 5R337

CHASSIS No. 5528

ALIGNMENT PROCEDURE

Operation	Connect Test Oscillator to	Dummy Antenna	Set Test Osc. to	Band	Set Dial At	Adjust Trimmers	Purpose
1	1st Det. Grid	1/2 Mfd.	455	Br'dc't	600	ABCD	I. F. Alignment
2	Rec. Ant. Lead	200 Mmfd.	1500	"	1500	F	Set Osc. to Scale
3	" " "	200 Mmfd.	1500	"	1500	G	Al'gment of Ant.

©John F. Rider, Publisher

ZENITH RADIO CORP.

MODELS 5S218AT, 5S228AT
5S237AT. Chassis 5521AT
Schematic, Parts

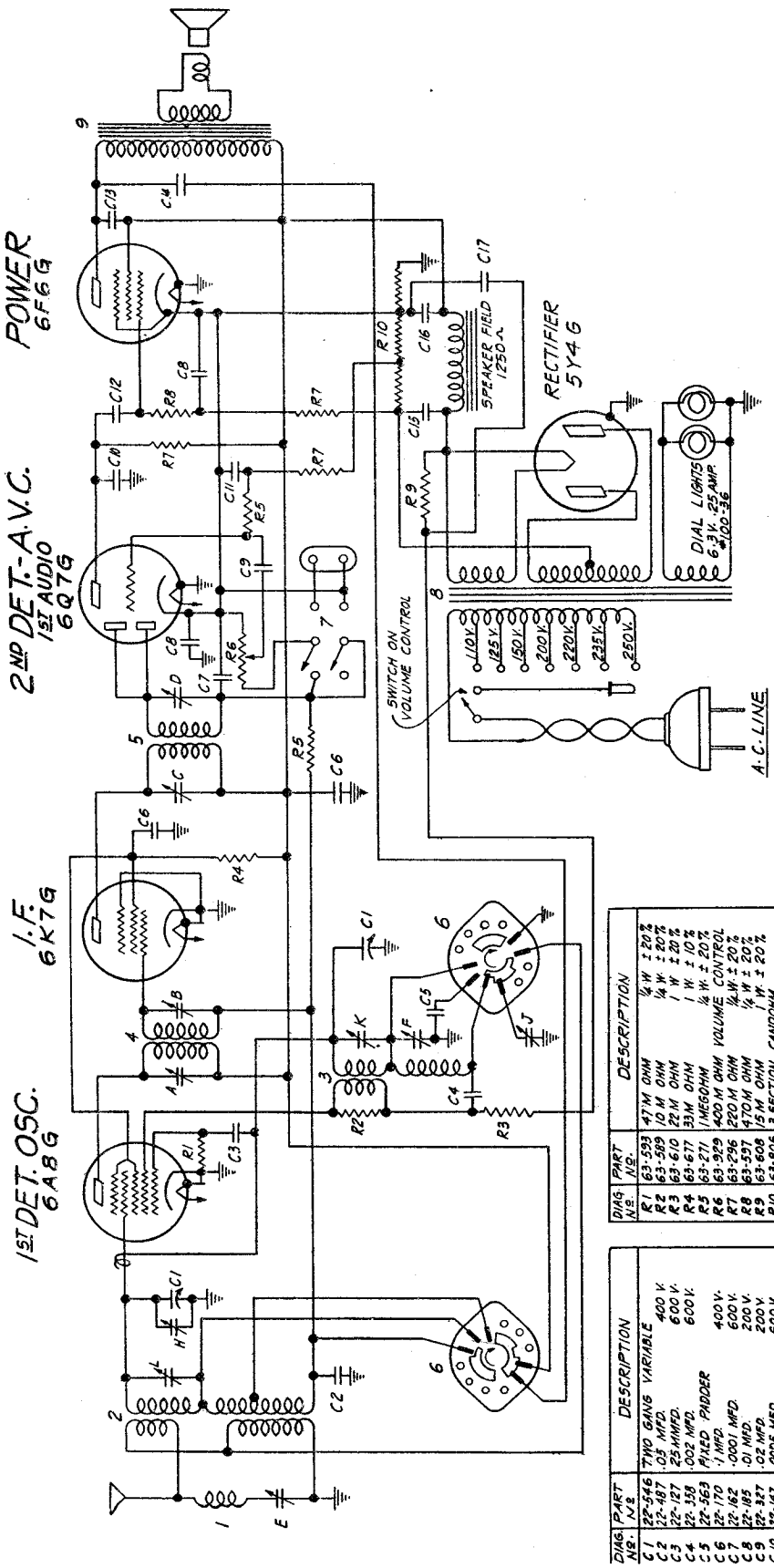

I.F. FREQUENCY 456 K.C.
5 TUBE SUPERHETERODYNE
2 BAND
CHASSIS Nº 5521-AT
ZENITH RADIO CORP.
CHICAGO, ILLINOIS

MODEL	SPEAKER
5S 218 AT	49-215 5'
5S 228 AT	49-215 5"
5S 237 AT	49-224 6"

DIAG. Nº.	PART Nº.	DESCRIPTION
C1	32-546	TWO GANG VARIABLE 400 V.
C2	22-187	.05 MFD. 600 V.
C3	22-127	23 MMFD. 600 V.
C4	22-358	.002 MFD.
C5	22-363	FIXED PADDER
C6	22-170	.1 MFD. 400 V.
C7	22-162	.0001 MFD 600 V.
C8	22-185	.01 MFD. 200 V.
C9	22-327	.02 MFD. 200 V.
C10	22-147	.0005 MFD. 600 V.
C11	22-130	.1 MFD 200 V.
C12	22-435	.02 MFD. 600 V.
C13	22-492	.002 MFD. 600 V.
C14	22-171	.05 MFD. 600 V.
C15	22-686	8 MFD ELECT. 475 V.
C16	22-634	16 MFD ELECT. 450 V.
C17		4 MFD ELECT. 450 V.
		VARIABLE TRIMMERS
A		1ST I.F. TRANS. PRIMARY
B		1ST I.F. TRANS. SECONDARY
C		2ND I.F. TRANS. PRIMARY
D		2ND I.F. TRANS. SECONDARY
E	#22-570	WAVE TRAP
F		BROADCAST OSCILLATOR (SEE NOTE)
H		ANTENNA BROADCAST (ON GANG)
J	#22-519	BROADCAST PADDER
K		SHORT WAVE OSCILLATOR (SEE NOTE)
L	#22-305	SHORT WAVE DETECTOR
		NOTE: TRIMMERS F & K MOUNTED ON BAKELITE STRIP #22-408

DIAG. Nº.	PART Nº.	DESCRIPTION
R1	63-593	47 M OHM ½ W. ± 20%
R2	63-589	10 M OHM ¼ W. ± 20%
R3	63-610	22 M OHM 1 W. ± 20%
R4	63-617	33 M OHM 1 W. ± 10%
R5	63-271	1 MEGOHM ½ W. ± 20%
R6	63-929	400 M OHM VOLUME CONTROL
R7	63-296	220 M OHM ½ W. ± 20%
R8	63-597	470 M OHM ½ W. ± 20%
R9	63-608	15 M OHM 1 W. ± 20%
R10	63-806	3 SECTION CANDOHM
1		WAVE TRAP COIL MOUNTED ON ANTENNA COIL ASSEMBLY
2	5-4908	ANTENNA COIL ASSEMBLY
3	5-5634	ANTENNA COIL & SHIELD ASSEMBLY
4	5-4909	OSCILLATOR COIL ASSEMBLY
5	95-459	1ST I.F. TRANSFORMER
6	95-460	2ND I.F. TRANSFORMER
7	85-104	BAND SELECTOR SWITCH
8	85-39	PHONO. SWITCH
9	95-452	POWER TRANS. 25 CYCLE ALL-VOLTAGE
		SPEAKER TRANSFORMER

©John F. Rider, Publisher

MODELS 5S218AT,5S228AT
5S237AT. Chassis 5521AT
Socket,Voltage,Trimmers
Alignment

ZENITH RADIO CORP.

SOCKET VOLTAGES

Tube	Position	1	2	3	4	5	6	7	8	9
6A8	Converter Osc.	0	6.3	244	97	—9	149	0	0	—.5
6K7	I. F.	0	6.3	246	97	0	—	0	0	—.5
6Q7	2nd Det. AVC 1st Audio	0	0	71	—2.5	—2.5	—	6.3	—2.5	—2.5
6F6	Power	0	0	231	246	—3.5	—	6.3	—2.5	—
5Y4	Rect.	0	—	AC	—	AC	—	316	316	—

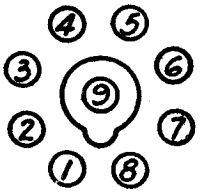

BOTTOM VIEW OF SOCKET

All voltages measured from point indicated to ground using a 1000 Ohm per Volt meter, antenna and ground disconnected. Line voltage 117V. Consumption 65W. Power Output 4.5W.

ALIGNMENT PROCEDURE

Operation	Connect Test Oscillator to—	Dummy Antenna	Set Test Osc. to	Band	Set Dial At	Adjust Trimmers	Purpose
1	1st Det. Grid	1/2 Mfd.	456	Br'dc't	600	ABCD	I. F. Alignment
2	Rec. Ant. Lead	200 Mmfd.	456	"	600	E	See Note
3	" " "	200 Mmfd.	1500	"	1500	F	Set Osc. to Scale
4	" " "	200 Mmfd.	1500	"	1500	G	Al'gment of Ant.
5	" " "	200 Mmfd.	600	"	600	J	Rock gang & adj. for max. output.
6				"		FG	Repeat 3 & 4.
7	Rec. Ant. Lead	400 Ohms	18000	S.W.	18000	K	Set Osc. to Scale
8	" " "	400 Ohms	16500	S.W.	16500	L	Rock gang & adj. for max. output.

NOTE: If receiver is used in a location subject to code interference adjust wave trap (E) for minimum interference with antenna connected and receiver operating in broadcast band.

Chassis No. 5521AT

LOCATION OF TRIMMERS

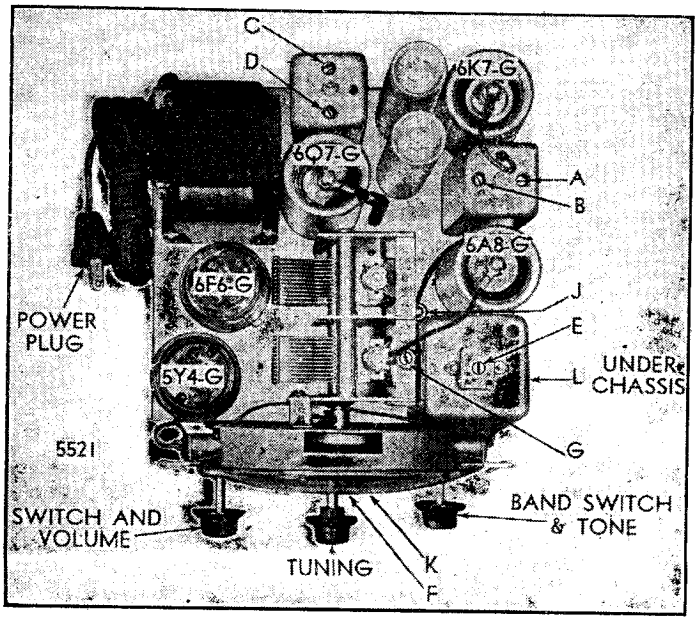

©John F. Rider, Publisher

ZENITH RADIO CORP.

MODELS 5S319, 5S330, 5S327
5S338, 5S339
Chassis 5529
Schematic, Parts

FOR TUNER DATA, SEE SPECIAL SECTION

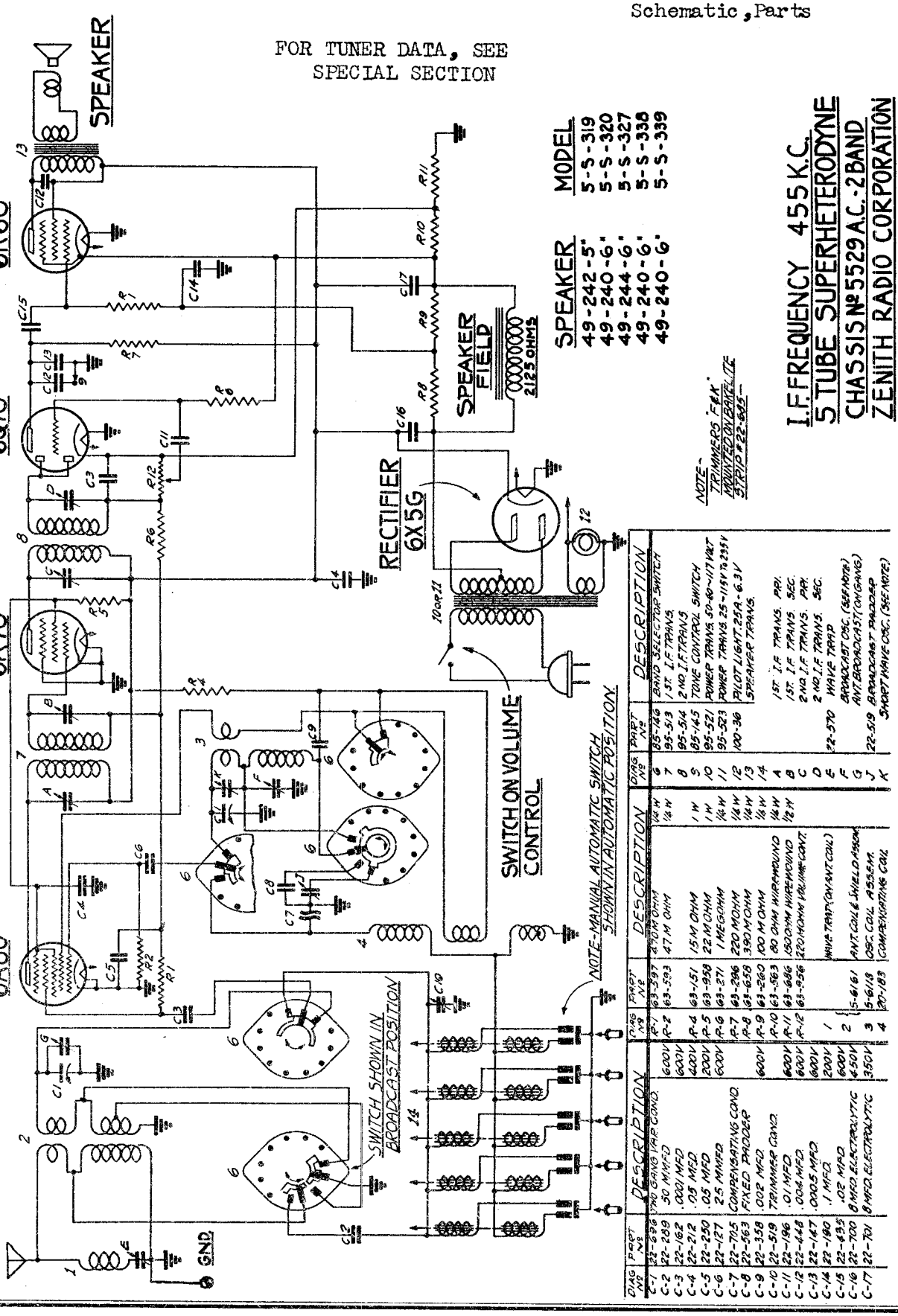

DIAG №	PART №	DESCRIPTION
C-1	23-638	TWO GANG VAR. COND.
C-2	22-289	.56 MMFD
C-3	22-162	.0001 MFD
C-4	22-272	.05 MFD
C-5	22-250	.05 MFD
C-6	22-127	2.5 MMFD
C-7	22-705	COMPENSATING COND.
C-8	22-563	FIXED PADDER
C-9	22-358	.002 MFD
C-10	22-519	TRIMMER COND.
C-11	22-196	.01 MFD
C-12	22-442	.004 MFD
C-13	22-147	.0005 MFD
C-14	22-180	.1 MFD
C-15	22-435	.02 MFD
C-16	22-700	8 MFD ELECTROLYTIC
C-17	27-701	8 MFD ELECTROLYTIC

DIAG №	PART №	DESCRIPTION
R-1	63-597	470 OHM
R-2	63-593	47 M OHM
R-4	63-151	.15 M OHM
R-5	63-958	22 M OHM
R-6	63-271	1 MEGOHM
R-7	63-296	220 M OHM
R-8	61-658	390 M OHM
R-9	63-260	100 M OHM
R-10	63-563	80 OHM WIREWOUND
R-11	61-686	1500 OHM WIREWOUND
R-12	63-956	220 OHM VOLUME CONT.
1		WAVE TRAP (ANT. COIL)
2	5-6161	ANT. COIL & SHIELD ASSM.
3	5-6118	OSC. COIL ASSEM.
4	20-183	COMPENSATING COIL

DIAG №	PART №	DESCRIPTION
S	85-146	BAND SELECTOR SWITCH
7	95-513	1ST. I.F. TRANS.
8	95-514	2 ND. I.F. TRANS.
9	85-145	TONE CONTROL SWITCH
10	95-521	POWER TRANS. 50-60~117 VOLT
11	95-523	POWER TRANS. 25~115V & 235V
12		PILOT LIGHT .25A - 6.3 V
13	100-36	SPEAKER TRANS.
14		
A		1ST. I.F. TRANS. PRI.
B		1ST. I.F. TRANS. SEC.
C		2 ND. I.F. TRANS. PRI.
D		2 ND. I.F. TRANS. SEC.
E	22-570	WAVE TRAP
F		BROADCAST OSC. (SEE NOTE)
G		ANT. BROADCAST (TWO GANG)
J	22-519	BROADCAST PADDER
K		SHORT WAVE OSC. (SEE NOTE)

©John F. Rider, Publisher

MODELS 5S319, 5S330, 5S327
5S338, 5S339
Chassis 5529

ZENITH RADIO CORP.

Socket, Trimmers, Voltage Alignment

NOTE

Voltages measured from chassis to socket contacts using a 1000 ohm per volt meter. Antenna disconnected — volume control on full.

Line voltage 115 v. Consumption 45 watts.

Power output 3 watts.

(A) Bias for 6A8 — 6K7 and diodes measured across R11.

(B) Low side of volume control.

(C) Bias for triode section of 6Q7 and 6K6 measured across R10 and R11.

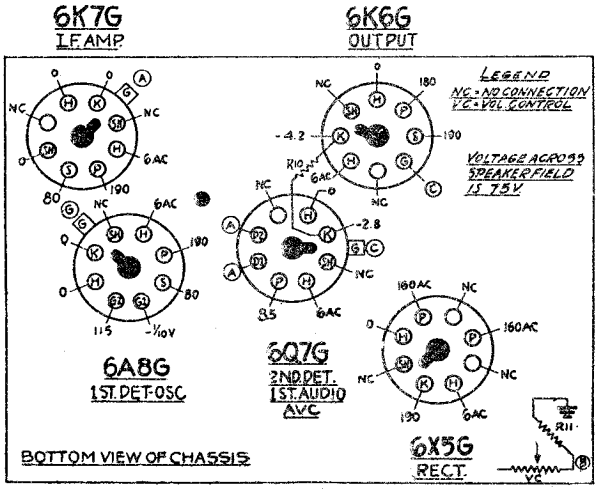

Models 5S319, 5S327, 5S330, 5S338, 57339

CHASSIS No. 5529

LEGEND

NC — No Connection
SH — Shield
H — Heater
P — Plate
S — Screen
G — Grid
SU — Suppressor
D — Diode
K — Cathode
F — Filament

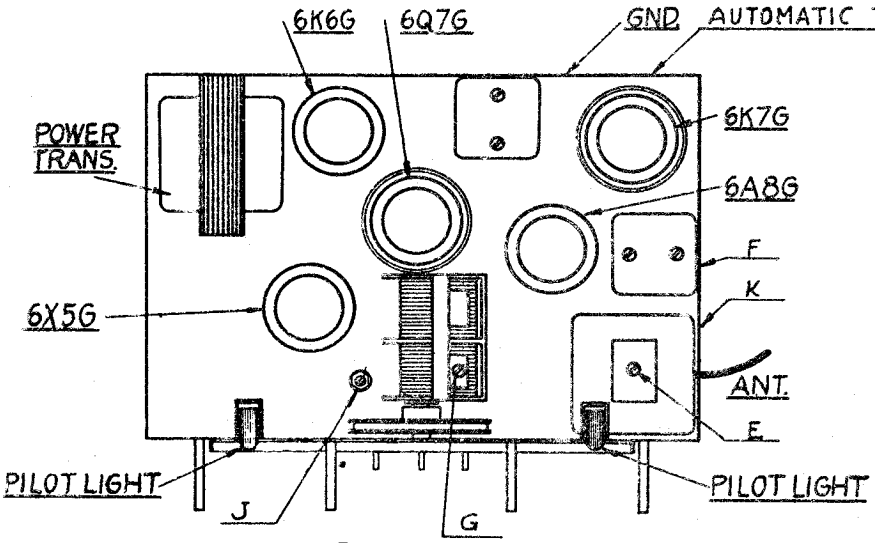

Location of Tubes and Trimmers

ALIGNMENT PROCEDURE

Operation	Connect Test Oscillator to	Dummy Antenna	Set Test Osc. to	Band	Set Dial At	Adjust Trimmers	Purpose
1	1st Det. Grid	1/2 Mfd.	455	Br'dc't	600	ABCD	I. F. Alignment
2	Rec. Ant. Lead	200 Mmfd.	455	"	600	E	See Note
3	" " "	200 Mmfd.	1500	"	1500	F	Set Osc. to Scale
4	" " "	200 Mmfd.	1500	"	1500	G	Al'gment of Ant.
5	" " "	200 Mmfd.	600	"	600	J	Rock gang & adj. for max. output
6	" " "	200 Mmfd.		"		FG	Repeat 3 & 4
7	" " "	400 Ohms	18000	S.W.	18000	K	Rock gang & adj. for max. output

NOTE: If receiver is used in location subject to code interference adjust wave trap (E) for minimum interference with antenna connected and receiver operating in broadcast band.

©John F. Rider, Publisher

ZENITH RADIO CORP.

MODELS 6D312, 6D316, 6D317
6D337. Chassis 5647
Schematic, Socket, Trimmers
Parts List

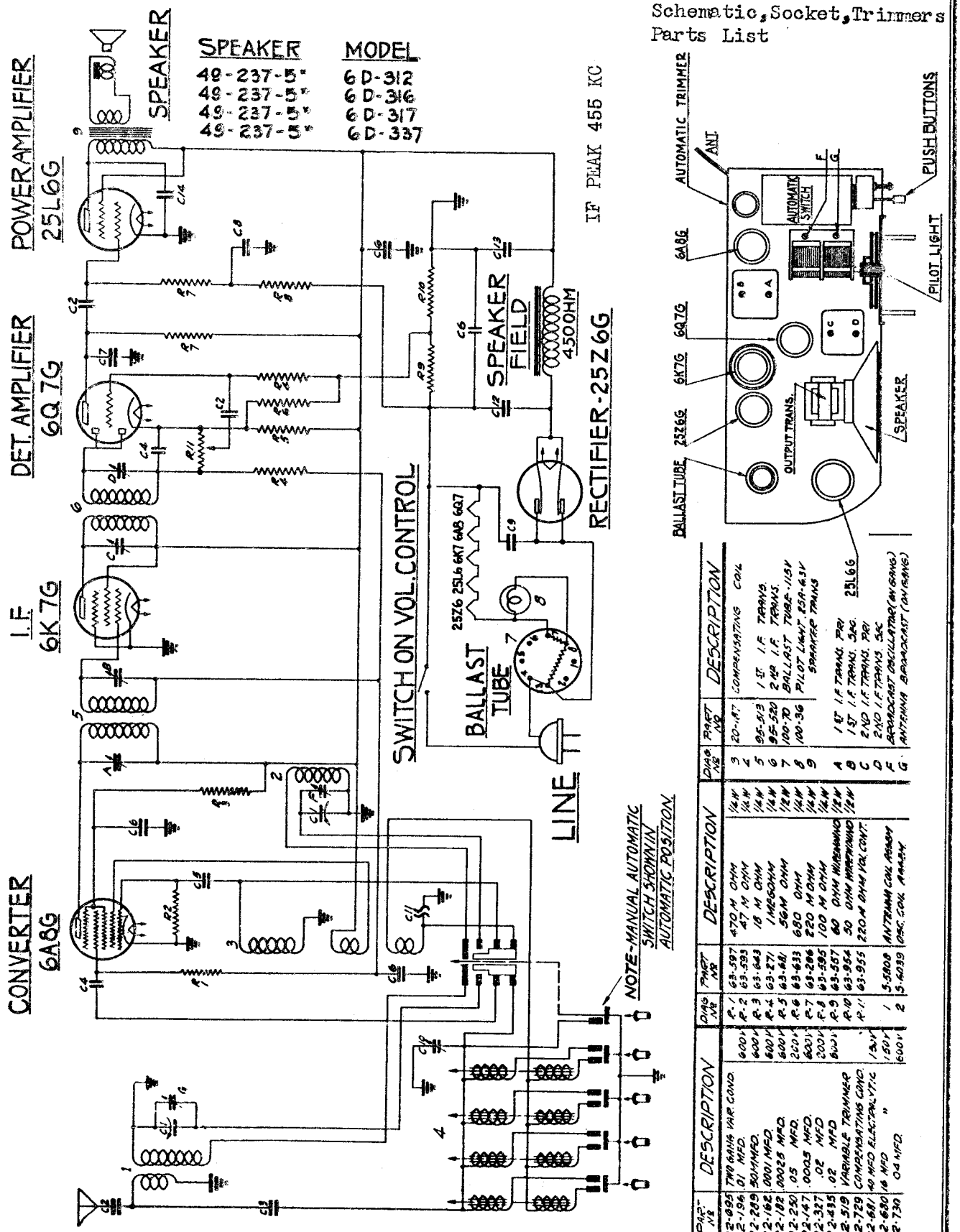

DIAG. NO.	PART NO.	DESCRIPTION
C-1	22-895	TWO GANG VAR. COND.
C-2	22-196	.01 MFD.
C-3	22-289	50 MMFD.
C-4	22-162	.001 MFD.
C-5	22-182	.0025 MFD.
C-6	22-230	.05 MFD.
C-7	22-147	.0005 MFD.
C-8	22-327	.02 MFD.
C-9	22-435	.02 MFD.
C-10	22-519	VARIABLE TRIMMER
C-11	22-729	COMBINATING COND.
C-12	22-681	.40 MFD ELECTROLYTIC
C-13	22-680	.16 MFD "
C-14	22-730	.04 MFD "

DIAG. NO.	PART NO.	DESCRIPTION	
R-1	63-597	470 M OHM	1/4 W
R-2	63-593	47 M OHM	1/4 W
R-3	63-643	18 M OHM	1/4 W
R-4	63-271	1 MEGOHM	1/4 W
R-5	63-481	56M OHM	1/2 W
R-6	63-633	680 OHM	1/4 W
R-7	63-296	220 M OHM	1/4 W
R-8	63-595	100 M OHM	1/4 W
R-9	63-587	60 OHM WIREWOUND	1/2 W
R-10	63-954	30 OHM WIREWOUND	1/2 W
R-11	63-955	220 M OHM VOL. CONT.	
1	5-5808	ANTENNA COIL ASSEM.	
2	5-6039	OSC. COIL ASSEM.	

DIAG. NO.	PART NO.	DESCRIPTION
3	20-147	COMPENSATING COIL
4		
5	95-513	1 ST I.F. TRANS.
6	95-520	2 ND I.F. TRANS.
7	100-70	BALLAST TUBE-115V
8	100-36	PILOT LIGHT .15A-6.3V
9		SQUARE TRANS
A		1 ST I.F. TRANS. PRI.
B		1 ST I.F. TRANS. SEC. 25L6G
C		2 ND I.F. TRANS. PRI.
D		2 ND I.F. TRANS. SEC
E		BROADCAST OSCILLATOR (4 GANG)
G		ANTENNA BROADCAST (4 GANG)

FOR TUNER DATA, SEE SPECIAL SECTION

©John F. Rider, Publisher

MODELS 6D312,6D316,6D317,6D337
MODELS 6S301,6S304,6S305,6S306
6S321,6S322,6S340
Voltage,Alignment

ZENITH RADIO CORP.

Models 6D312, 6D316, 6D317, 6D337
CHASSIS No. 5647

NOTE

Voltages measured from socket contacts to chassis using a 1000 ohm per volt meter. Antenna disconnected — volume control on full.

Line voltage 115 v. Consumption 55 watts.

Power output 1.6 watts.

(A) Bias for 6A8 — 6K7 and 6Q7 measured at 6Q7 cathode.

(B) Bias for 25L6 measured at point C on 6Q7 socket. Filament voltages measured across heaters of 25L6 and 25Z6 is 22 volts A.C. Other tubes 6 v A.C.

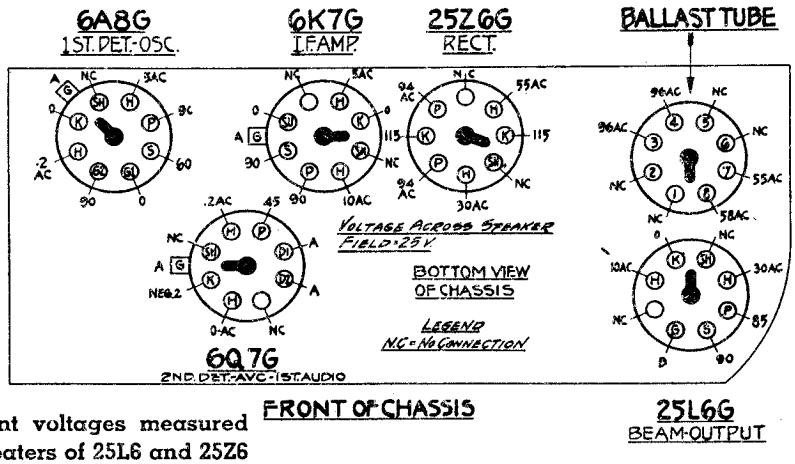

Operation	Connect Test Oscillator to	Dummy Antenna	Set Test Osc. to	Band	Set Dial At	Adjust Trimmers	Purpose
1	1st Det. Grid	1/2 Mfd.	455	Br'dc't	600	ABCD	I. F. Alignment
2	Rec. Ant. Lead	200 Mmfd.	1500	"	1500	F	Set Osc. to Scale
3	" " "	200 Mmfd.	1500	"	1500	G	Al'gment of Ant.

Models 6S301, 6S304, 6S305, 6S306, 6S321, 6S322, 6S340
CHASSIS No. 5651

NOTE

Voltages measured for socket contacts to chassis using a 1000 ohm per volt meter. Antenna disconnected — volume control on full.

Line voltage 115 v. Consumption 60 watts.

Power Output 4.5 watts.

(A) Bias for 6A8 — 6K7 and 6J5 measured across X which is neg. 2.3 volts.

(B) Bias for 6F5 measured across X and Y which is neg. 3.8 volts.

(C) Bias for 6F6 measured across XY and Z which is neg. 16 volts.

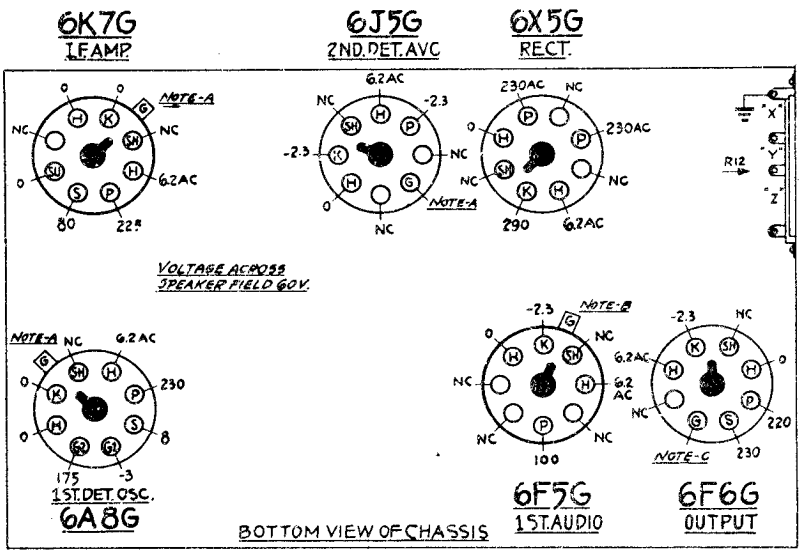

ALIGNMENT PROCEDURE

Operation	Connect Test Oscillator to	Dummy Antenna	Set Test Osc. to	Band	Set Dial At	Adjust Trimmers	Purpose
1	1st Det. Grid	1/2 Mfd.	455	Br'dc't	600	ABCD	I. F. Alignment
2	Rec. Ant. Post	200 Mmfd.	455	"	600	E	See Note
3	" " "	200 Mmfd.	1500	"	1500	F	Set Osc. to Scale
4	" " "	200 Mmfd.	1500	"	1500	G	Al'gment of Ant.
5	" " "	200 Mmfd.	600	"	600	J	Rock gang & adj. for max. output.
6	" " "	200 Mmfd.		"		FG	Repeat 3 & 4
7	" " "	400 Ohms	18000	S.W.	18000	K	Set Osc. to Scale
8	" " "	400 Ohms	18000	S.W.	18000	L	Rock Gang & adj. for max. output.
9	" " "	400 Ohms	6000	Police	6000	N	Rock Gang & adj. for max. output.

NOTE: If receiver is used in location subject to code interference adjust wave trap (E) for minimum interference with antenna connected and receiver operating in broadcast band.

©John F. Rider, Publisher

Schematic, Socket, Trimmers Parts

ZENITH RADIO CORP.

MODELS 6S301-6S306 incl., 6S321, 6S322, 6S340
Chassis 5651

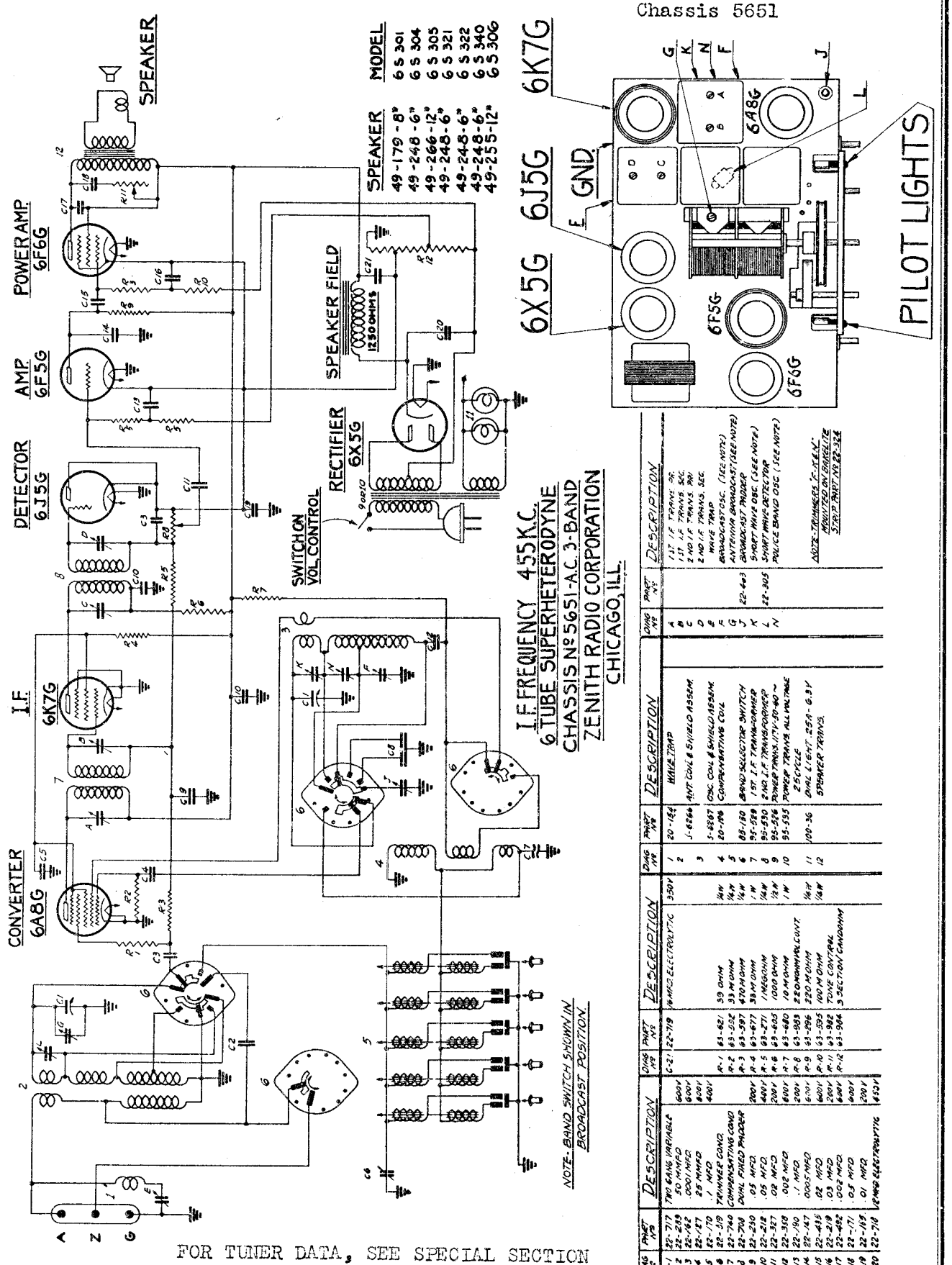

MODEL	SPEAKER
6S 301	49-179-8"
6S 304	49-248-6"
6S 305	49-266-12"
6S 321	49-248-6"
6S 322	49-248-6"
6S 340	49-248-6"
6S 306	49-255-12"

DIAG Nº	PART Nº	DESCRIPTION
C-1	22-717	TWO GANG VARIABLE
C-2	22-218	.001 MFD. 600V
C-3	22-462	.001 MFD. 600V
C-4	22-471	25 MMFD 600V
C-5	22-170	1 MFD 400V
C-6	22-519	TRIMMER COND.
C-7	22-740	COMPENSATING COND
C-8	22-708	DUAL FIXED PADDER
C-9	22-230	.05 MFD. 200V
C-10	22-218	.05 MFD. 400V
C-11	22-327	.02 MFD. 200V
C-12	22-358	.002 MFD. 600V
C-13	22-190	.1 MFD. 200V
C-14	22-147	.0025 MFD. 600V
C-15	22-435	.02 MFD. 600V
C-16	22-218	.05 MFD. 400V
C-17	22-482	.002 MFD. 600V
C-18	22-711	.05 MFD. 200V
C-19	22-183	.01 MFD. 400V
C-20	22-718	2 MFD ELECTROLYTIC 450V
R-1	63-82	39 OHM 1W
R-2	63-352	33 M OHM ½W
R-3	63-397	470 M OHM ½W
R-4	63-677	33 M OHM 1W
R-5	63-271	1 MEGOHM ½W
R-6	63-603	1000 OHM ½W
R-7	63-680	10 M OHM 1W
R-8	63-983	250 OHM WIRE WOUND
R-9	63-296	220 M OHM ½W
R-10	63-985	100 M OHM ½W
R-11	63-982	TONE CONTROL
R-12	63-964	3 SECTION CANDOHM

DIAG Nº	PART Nº	DESCRIPTION
1	20-144	WAVE TRAP
2	1-6566	ANT COIL & SHIELD ASSEM.
3	1-6567	OSC. COIL & SHIELD ASSEM.
4	20-196	COMPENSATING COIL
5	85-180	BAND SELECTOR SWITCH
6	95-529	1ST I.F. TRANSFORMER
7	95-530	2ND I.F. TRANSFORMER
8	95-526	POWER TRANS. 117V-50-60 ~
9	95-535	POWER TRANS. ALL VOLTAGE 25 CYCLE
10		DIAL LIGHT .25A - 6.3V
11	100-36	SPEAKER TRANS.
12		

DIAG Nº	PART Nº	DESCRIPTION
A		1ST I.F. TRANS. PRI.
B		1ST I.F. TRANS. SEC.
C		2ND I.F. TRANS. PRI.
D		2ND I.F. TRANS. SEC.
E		WAVE TRAP
F		BROADCAST OSC. (SEE NOTE)
G		ANTENNA BROADCAST (SEE NOTE)
J	22-443	BROADCAST PADDER
K		SHORT WAVE OSC. (SEE NOTE)
L	22-305	SHORT WAVE DETECTOR
N		POLICE BAND OSC. (SEE NOTE)

NOTE- TRIMMERS ACCESS. MOUNTED ON BAKELITE STRIP PART Nº 22-324

©John F. Rider, Publisher

MODELS 6S330,6S361
Chassis 5648
Schematic,Socket
Trimmers,Parts

ZENITH RADIO CORP.

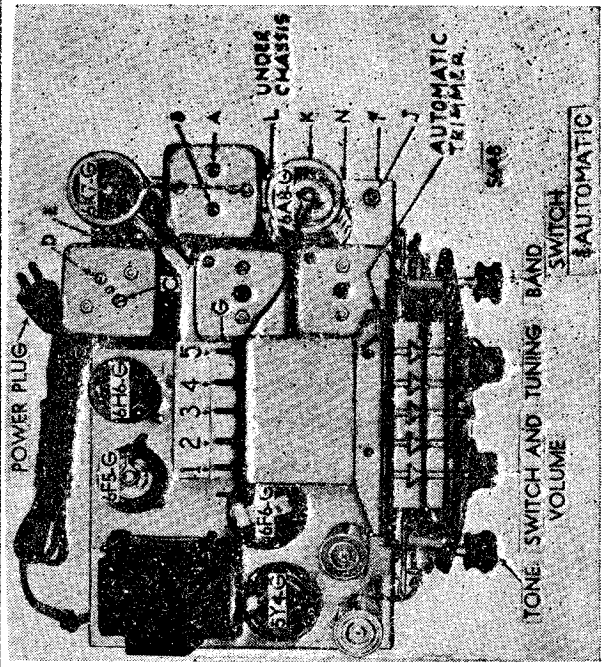

Location of Tubes and Trimmers

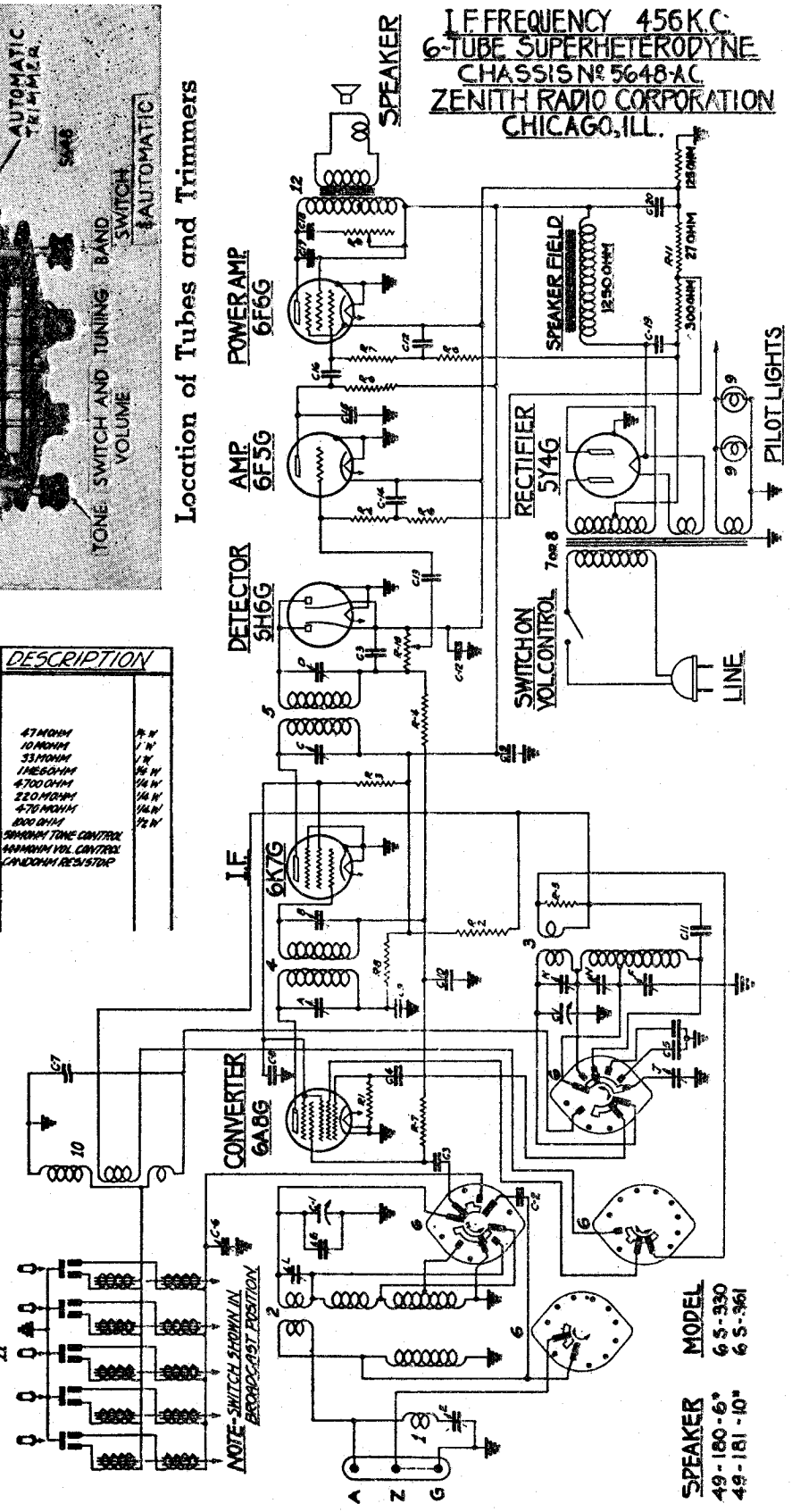

DIAG Nº	PART Nº	DESCRIPTION		DIAG Nº	PART Nº	DESCRIPTION	
C-1	22-547	TWO GANG VAR. COND.					
C-2	22-289	50 M.M.FD.	400 V				
C-3	22-162	.0001 MFD.	400 V				
C-4	22-127	25 M.M.FD.	400 V				
C-5	22-550	DUAL FIXED PADDER		R-1	63-593	47 M OHM	½ W
C-6	22-519	TRIMMER CONDENSER		R-2	63-680	10 M OHM	1 W
C-7	22-705	COMPENSATING COND.		R-3	63-677	33 M OHM	1 W
C-8	22-170	.1 MFD.	400 V	R-4	63-271	1 MEGOHM	½ W
C-9	22-212	.05 MFD.	400 V	R-5	63-587	4700 OHM	½ W
C-10	22-250	.05 MFD.	600 V	R-6	63-296	220 M OHM	½ W
C-11	22-358	.002 MFD.	600 V	R-7	63-597	470 M OHM	½ W
C-12	22-185	.01 MFD.	600 V	R-8	63-605	1000 OHM	½ W
C-13	22-327	.02 MFD.	400 V	R-9	63-521	5M OHM TONE CONTROL	
C-14	22-190	.1 MFD.	400 V	R-10	63-520	1M OHM VOL CONTROL	
C-15	22-167	.0005 MFD.	600 V	R-11	63-613	1 M OHM RESISTOR	
C-16	22-435	.02 MFD.	600 V				
C-17	22-492	.002 MFD.	600 V				
C-18	22-171	.05 MFD.	600 V				
C-19	22-596	4 MFD DRY ELECTROLYTIC	450 V				
C-20		4 MFD DRY ELECTROLYTIC	450 V				

DIAG Nº	PART Nº	DESCRIPTION
1	20-154	WAVE TRAP ASSEM.
2	5-4941	ANT. COIL & SHIELD ASSEM.
3	5-4942	OSC. COIL & SHIELD ASSEM.
4	95-413	1ST. I.F. TRANSFORMER
5	95-414	2ND. I.F. TRANSFORMER
6	85-139	BAND SELECTOR SWITCH
7	95-415	POWER TRANS. 117 V - 50-60 CYCLE
8	95-450	POWER TRANSFORMER ALL VOLTAGE - 25 CYCLE
9	100-36	PILOT LIGHT .25 A 6.3 V
10	20-183	COMPENSATING COIL
11		
12		SPEAKER TRANSFORMER
A		1ST I.F. TRANS. PRI.
B		1ST I.F. TRANS. SEC.
C		2ND I.F. TRANS. PRI.
D		2ND I.F. TRANS. SEC.
E		WAVE TRAP
F		BROADCAST OSC. (SEE NOTE)
G		ANT. BROADCAST (ANY BAND)
J	22-519	BROADCAST PADDER
K		SHORT WAVE OSC. (SEE NOTE)
L	22-305	SHORT WAVE DETECTOR
N		POLICE BAND OSC. (SEE NOTE)

NOTE- TRIMMERS "F" "K" & "N" MOUNTED ON BAKELITE STRIP - PART Nº 22-599

©John F. Rider, Publisher

ZENITH RADIO CORP.

MODELS 6S330,6S361
Voltage,Alignment
MODEL 6B321
Socket,Trimmers
Alignment

Models 6S330, 6S361
CHASSIS No. 5648

ALIGNMENT PROCEDURE

Operation	Connect Test Oscillator to	Dummy Antenna	Set Test Osc. to	Band	Set Dial At	Adjust Trimmers	Purpose
1	1st Det. Grid	1/2 Mfd.	456	Br'dc't	600	ABCD	I. F. Alignment
2	Rec. Ant. Post	200 Mmfd.	456	"	600	E	See Note
3	" " "	200 Mmfd.	1500	"	1500	F	Set Osc. to Scale
4	" " "	200 Mmfd.	1500	"	1500	G	Al'gment of Ant.
5	" " "	200 Mmfd.	600	"	600	J	Rock gang & adj. for max. output
6	" " "	200 Mmfd.		"		FG	Repeat 3 & 4
7	" " "	400 Ohms	18000	S.W.	18000	K	Set Osc. to Scale
8	" " "	400 Ohms	16500	S.W.	16500	L	Rock Gang & adj. for max. output
9	" " "	400 Ohms	5500	Police	5500	N	Rock Gang & adj. for max. output

NOTE: If receiver is used in location subject to code interference adjust wave trap (E) for minimum interference with antenna connected and receiver operating in broadcast band.

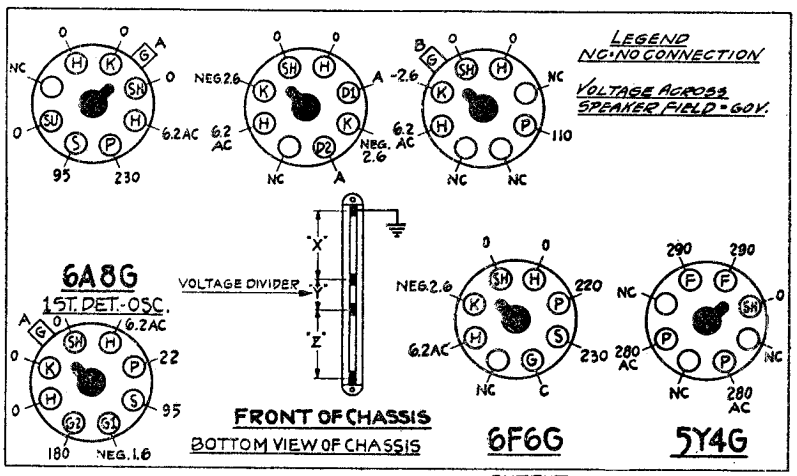

Line voltage 115 v. Consumption 65 watts.

Power Output 4.5 watts.

(A) Bias for 6A8 — 6K7 and 6H6 tubes measured across X which is neg. 2.6 volts.

(B) Bias for 6F5 tube measured across X and Y which is neg. 4 volts.

(C) Bias for 6F6 tube measured across X-Y and Z which is neg. 16 volts.

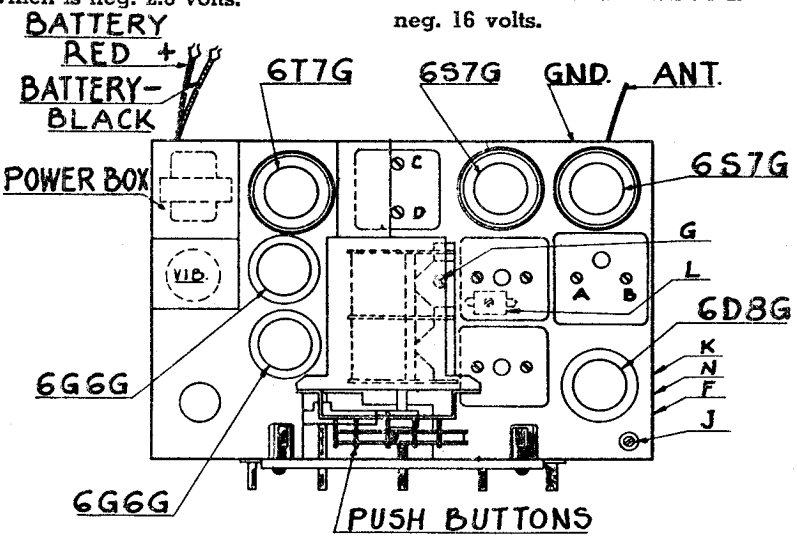

Location of Tubes and Trimmers

ALIGNMENT PROCEDURE

Model No. 6B321
CHASSIS No. 5653

Operation	Connect Test Oscillator to	Dummy Antenna	Set Test Osc. to	Band	Set Dial At	Adjust Trimmers	Purpose
1	1st Det. Grid	1/2 Mfd.	455	Br'dc't	600	ABCD	I. F. Alignment
2	Rec. Ant. Post	200 Mmfd.	1500	"	1500	F	Set Osc. to Scale
3	" " "	200 Mmfd.	1500	"	1500	G	Al'gment of Ant.
4	" " "	200 Mmfd.	600	"	600	J	Rock gang & adj for max. output
5	" " "	200 Mmfd.		"		FG	Repeat 2 & 3
6	" " "	400 Ohms	18000	S.W.	18000	K	Set Osc. to scale
7	" " "	400 Ohms	18000	S.W.	18000	L	Rock gang & adj for max. output
8	" " "	400 Ohms	6000	Police	6000	N	Rock gang & adj for max. output

©John F. Rider, Publisher

MODEL 6B321
Chassis 5653

ZENITH RADIO CORP.

Schematic, Voltage Parts

FOR TUNER DATA, SEE SPECIAL SECTION

I.F. FREQUENCY 455 K.C.
6 TUBE SUPERHETERODYNE
CHASSIS No. 5653 6V. 3 BAND
ZENITH RADIO CORPORATION

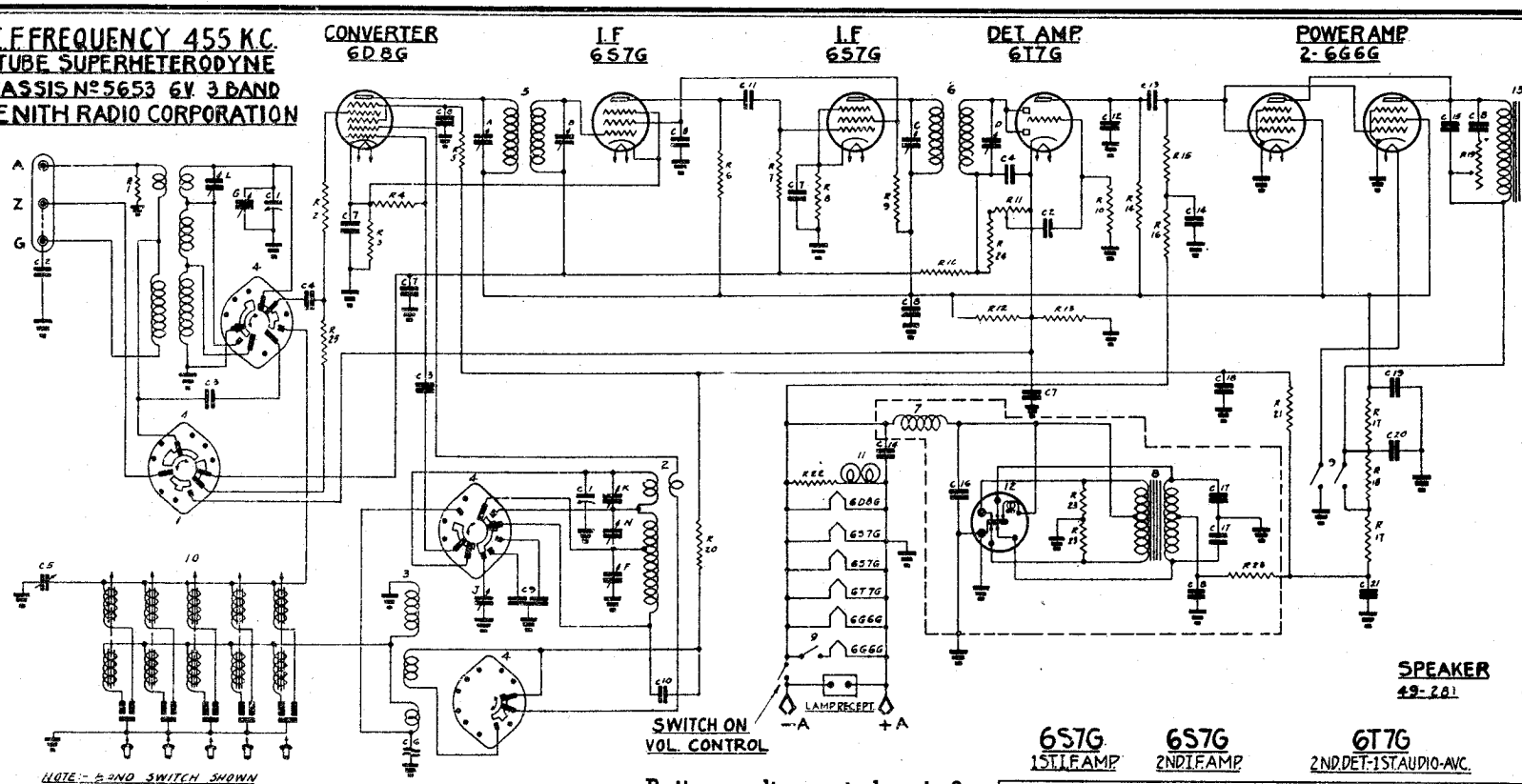

NOTE:- B-2ND SWITCH SHOWN IN BROADCAST POSITION

SPEAKER 49-281 MODEL 6B-321

Battery voltage at chassis 6v.

DIAG. No.	PART No.	DESCRIPTION		DIAG. No.	PART No.	DESCRIPTION		DIAG. No.	PART No.	DESCRIPTION		DIAG. No.	PART No.	DESCRIPTION
C-1	22-717	TWO GANG VARIABLE		C-19		10 MFD ELECT	250V	R-17	63-605	1000 OHM	1/2W	10		
C-2	22-186	.01 MFD	200V	C-20	22-742	15 MFD ELECT	250V	R-18	63-962	4700 OHM	1W	11	100-39	PILOT LIGHT 2.5V - .17A
C-3	22-269	50 MMFD	600V	C-21		15 MFD ELECT	250V	R-19	63-982	TONE CONTROL		12	190-6	VIBRATOR
C-4	22-162	.0001 MFD	600V					R-20	63-676	5600 OHM	1/2W	13		SPEAKER TRANS.
C-5	22-519	TRIMMER COND.		R-1	63-587	47000HM	1/4W	R-21	63-796	10,000 OHM	1/2W			
C-6	22-748	COMPENSATING COND.		R-2	63-621	39 OHM	1/4W	R-22	63-533	19 OHM WIREWOUND		A		1ST I.F. TRANS. PRIMARY
C-7	22-250	.25 MFD	200V	R-3	63-629	330 OHM	1/4W	R-23	63-577	100 OHM	1/4W	B		1ST I.F. TRANS. SECONDARY
C-8	22-215	.05 MFD	400V	R-4	63-592	33M OHM	1/4W	R-24	63-593	47M OHM	1/4W	C		2ND I.F. TRANS. PRIMARY
C-9	22-706	DUAL SIZED PADDER		R-5	63-643	1M OHM	1/4W	R-25	63-597	470 MOHM	1/4W	D		2ND I.F. TRANS. SECONDARY
C-10	22-358	.002 MFD	600V	R-6	63-150	10M OHM	1/2W	1				E		BROADCAST OSC (SEE NOTE)
C-11	22-187	.25 MMFD	600V	R-7	63-589	10M OHM	1/4W		5-6308	ANT COIL & SHIELD ASSEM		F		ANT. BROADCAST (GANG)
C-12	22-187	.0005 MFD	600V	R-8	63-632	560 OHM	1/4W	2				G		ANT. BROADCAST (PADDER)
C-13	22-188	.02 MFD	400V	R-9	63-885	.82 M OHM	1/2W		5-6607	OSC COIL & SHIELD ASSEM		J	22-605	BROADCAST PADDER
C-14	22-350	.25 MFD	200V	R-10	63-271	1 MEGOHM	1/2W	3	22-196	COMPENSATING COIL		K		SHORT WAVE OSC (SEE NOTE)
C-15	22-448	.004 MFD	600V	R-11	63-983	VOLUME CONTROL		4	85-153	BAND SELECTOR SWITCH		L	22-305	SHORT WAVE DETECTOR
C-16	22-193	.5 MFD	200V	R-12	63-160	100 M OHM	1/2W	5	95-559	1ST I.F. TRANS.		M		POLICE BAND OSC (SEE NOTE)
C-17	22-669	.01 MFD	400V	R-13	63-634	820 OHM	1/4W	6	95-580	2ND I.F. TRANS.		N		
C-18	22-741	8MFD ELECTROLYTIC	250V	R-14	63-296	220 M OHM	1/4W	7	5-5043	CHOKE ASSEM.				NOTE: TRIMMERS F, K & N ARE MOUNTED ON BAKELITE STRIP PART #22-356
				R-15	63-658	390 M OHM	1/4W	8	95-552	POWER TRANSFORMER				
				R-16	63-595	100M OHM	1/4W	9	85-157	BATTERY CONSERVER SW				

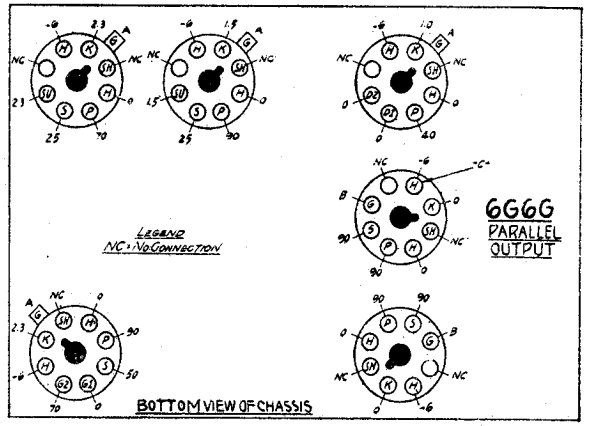

Consumption — switch on normal—2.3 amperes.

Consumption — switch on conserv. 1.7 amperes.

Power output 1 watt.

(A) Bias voltage measured from cathode to chassis.

(B) Bias for 6G6 measured between point C and chassis and is —6 volts.

©John F. Rider, Publisher

ZENITH RADIO CORP.

MODELS 6J322, 6J357
Chassis 5654
Schematic, Parts

FOR TUNER DATA
SEE SPECIAL
SECTION

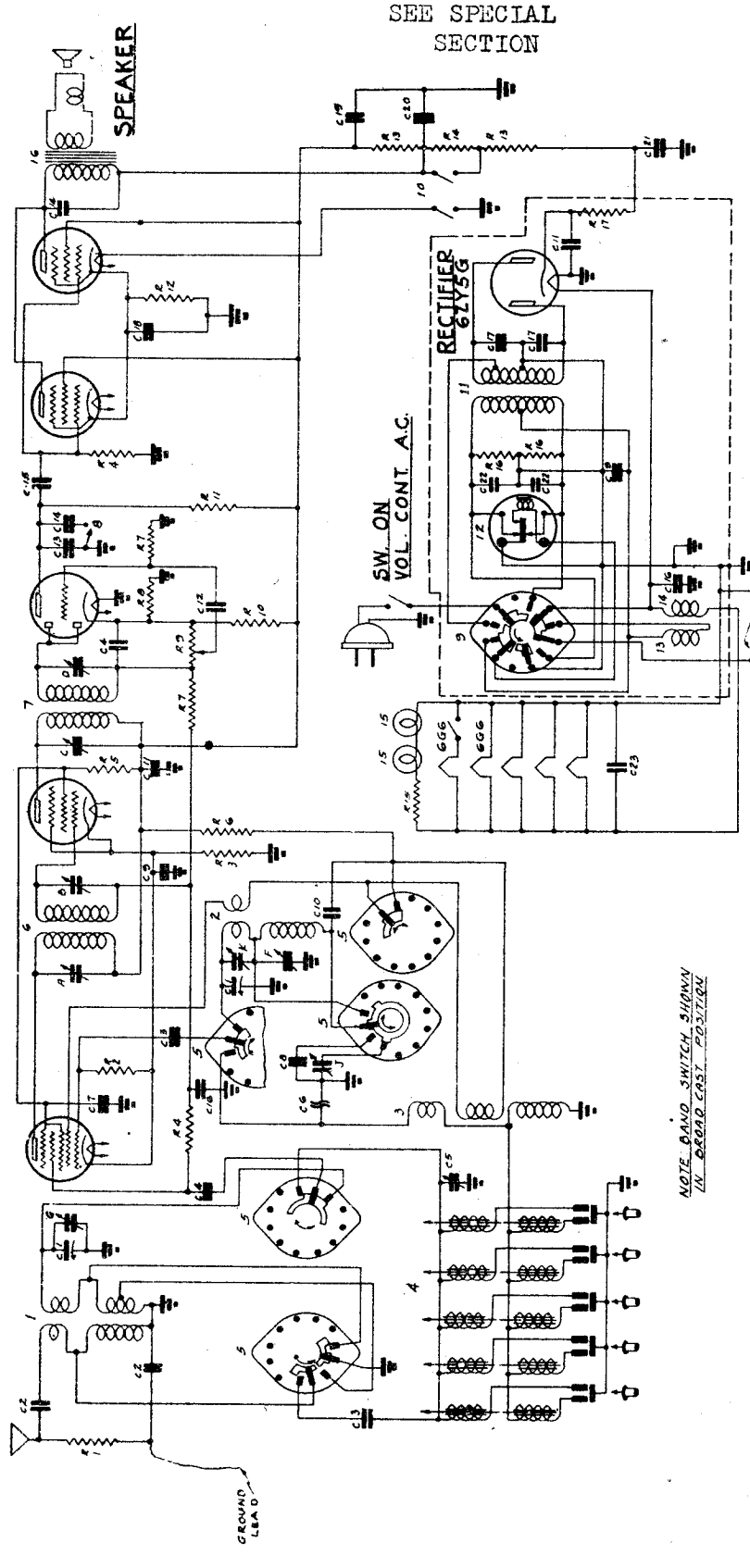

SPEAKER MODEL
49-2706 6J322
49-2690 6J357

6 VOLT-DC, 110 VOLT-A.C.
I.F. FREQUENCY 455 K.C.
6 TUBE SUPERHETERODYNE
CHASSIS No. 5654 2-BAND
ZENITH RADIO CORPORATION
CHICAGO, ILL.

DWG. NO.	PART NO.	DESCRIPTION
C-1	22-744	TWO GANG VARIABLE
C-2	22-296	.01 MFD
C-3	22-295	.00 MFD
C-4	22-162	.0001 MFD
C-5	22-313	TRIMMER COND.
C-6	22-740	COMPENSATING COND.
C-7	22-243	.01 MFD.
C-8	21-363	FIXED PADDER COND.
C-9	21-350	.25 MFD.
C-10	22-338	.002 MFD.
C-11	22-212	.05 MFD.
C-12	22-185	.01 MFD.
C-13	22-147	.0005 MFD.
C-14	22-448	.004 MFD.
C-15	22-188	.02 MFD.
C-16	22-260	.05 MFD.
C-17	22-214	.02 MFD.
C-18	22405	10 MFD ELECTROLYTIC

DWG. NO.	PART NO.	DESCRIPTION
C-19	22-742	.10 MFD ELECT. 250V
C-20		.5 MFD. ELECT. 250V
C-21		.5 MFD. ELECT. 250V
C-22	22-313	005 MFD. 200V
C-23	22-193	.5 MFD. 200V
R-1	63-387	4700 OHM
R-2	63-393	47M OHM
R-3	63-620	270 OHM
R-4	63-397	470M OHM
R-5	63-681	.56M OHM
R-6	63-151	1.5M OHM
R-7	63-271	1 MEGOHM
R-8	63-634	820 OHM
R-9	63-991	VOL. CONT. 1.5M 22M
R-10	63-760	240 M OHM
R-11	63-996	220 M OHM
R-12	63-693	680 OHM
R-13	63-625	1000 OHM
R-14	63-962	4700 OHM

DWG. NO.	PART NO.	DESCRIPTION	WATTS
R-15	63-933	15 OHM WIREWOUND	1/2 W
R-16	63-963	120 OHM	1/4 W
R-17	63-977	100 OHM	
1	5-6855	ANT COIL & SHIELD ASSEM	
2	5-6118	OSCILLATOR COIL ASSEM	
3	20-196	COMPENSATING COIL	
4			
5	85-162	BAND SWITCH	
6	95-558	1ST I.F. TRANS	
7	95-559	2ND I.F. TRANS	
8	85-145	TONE CONTROL SWITCH	
9	85-135	POWER SUPPLY SWITCH	
10	69-157	BATTERY CONVERTER SW	
11	95-558	POWER TRANS	
12	192-11	VIBRATOR	
13	5-5043	CHOKE ASSEM.	

DWG. NO.	PART NO.	DESCRIPTION
A	5-2778	CHOKE ASSEM
B	100-39	PILOT LIGHT 28V 174
C		SPEAKER TRANS
D		
E		
F		1ST I.F. TRANS PRIMARY
G		1ST I.F. TRANS SECONDARY
H		2ND I.F. TRANS. PRIMARY
I		2ND I.F. TRANS. SECONDARY
J		BROAD CAST ANT. (SEE NOTE)
K	22-619	ANT. BROADCAST (ON BAND)
		BROAD CAST PADDER
		SHORT WAVE OSC. (SEE NOTE)

NOTE: TRIMMERS F & K ARE MOUNTED ON BAKELITE STRIP PART # 22-408

©John F. Rider, Publisher

MODELS 6J322,6J357
Chassis 5654
Voltage,Socket
Trimmers,Alignment

ZENITH RADIO CORP.

NOTE

Voltages measured from socket contacts to chassis using a 1000 ohm per volt meter with chassis operating on 110 volt A.C.

Antenna disconnected — volume control on full.

Line voltage 115 v. Consumption 18 watts.

Battery voltage at chassis 6v.

Consumption — switch on normal 2.3 amperes.

Consumption — switch on conserv. 1.95 amperes.

Power Output 1 watt.

(A) Bias for 6D8 and 6S7 measured at K contacts of respective sockets which is +1.8 volts.

(B) Bias for 6G6 tubes measured at K contact of sockets which is +7 volts.

(C) Bias for 6T7 triode measured at K contact of same socket which is +1 volt.

LEGEND

NC — No Connection
SH — Shield
H — Heater
P — Plate
S — Screen
G — Grid
SU — Suppressor
D — Diode
K — Cathode
F — Filament

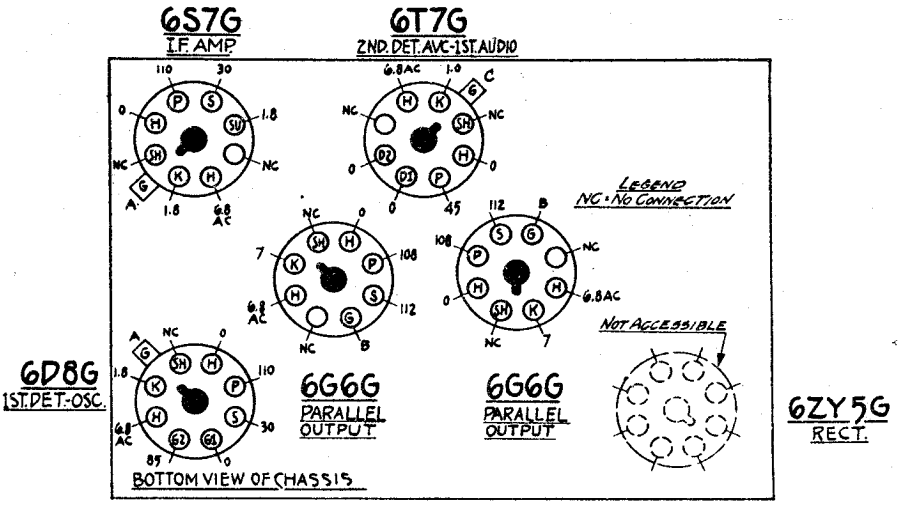

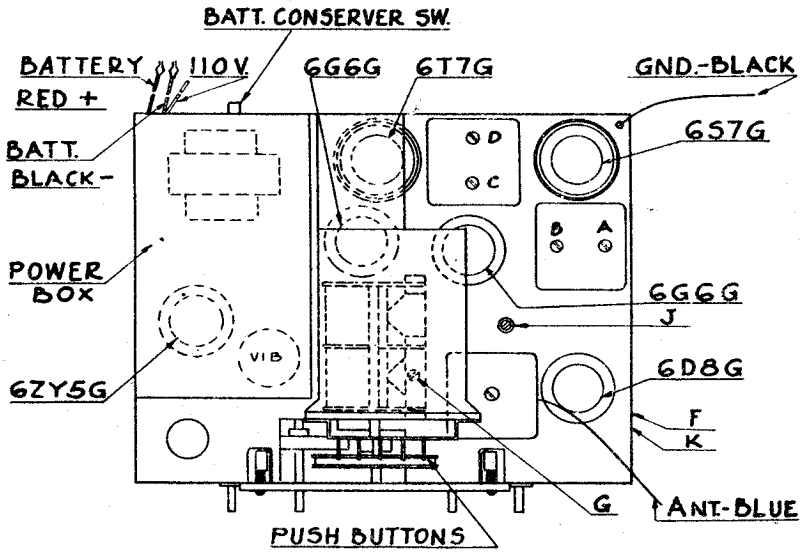

Location of Tubes and Trimmers

Models 6J322, 6J357

CHASSIS No. 5654

ALIGNMENT PROCEDURE

Operation	Connect Test Oscillator to	Dummy Antenna	Set Test Osc. to	Band	Set Dial At	Adjust Trimmers	Purpose
1	1st Det. Grid	1/2 Mfd.	455	Br'dc't	600	ABCD	I. F. Alignment
2	Rec. Ant. Lead	200 Mmfd.	1500	"	1500	F	Set Osc. to Scale
3	" " "	200 Mmfd.	1500	"	1500	G	Al'gment of Ant.
4	" " "	200 Mmfd.	600	"	600	J	Rock Gang & adj. for max. output
5	" " "	200 Mmfd.		"		FG	Repeat 3 & 4
6	" " "	400 Ohms	18000	S.W.	18000	K	Rock gang & adj. for max. output

©John F. Rider, Publisher

ZENITH RADIO CORP.

MODELS 6S254AT, 6S256AT
Chassis 5644AT
Schematic, Parts

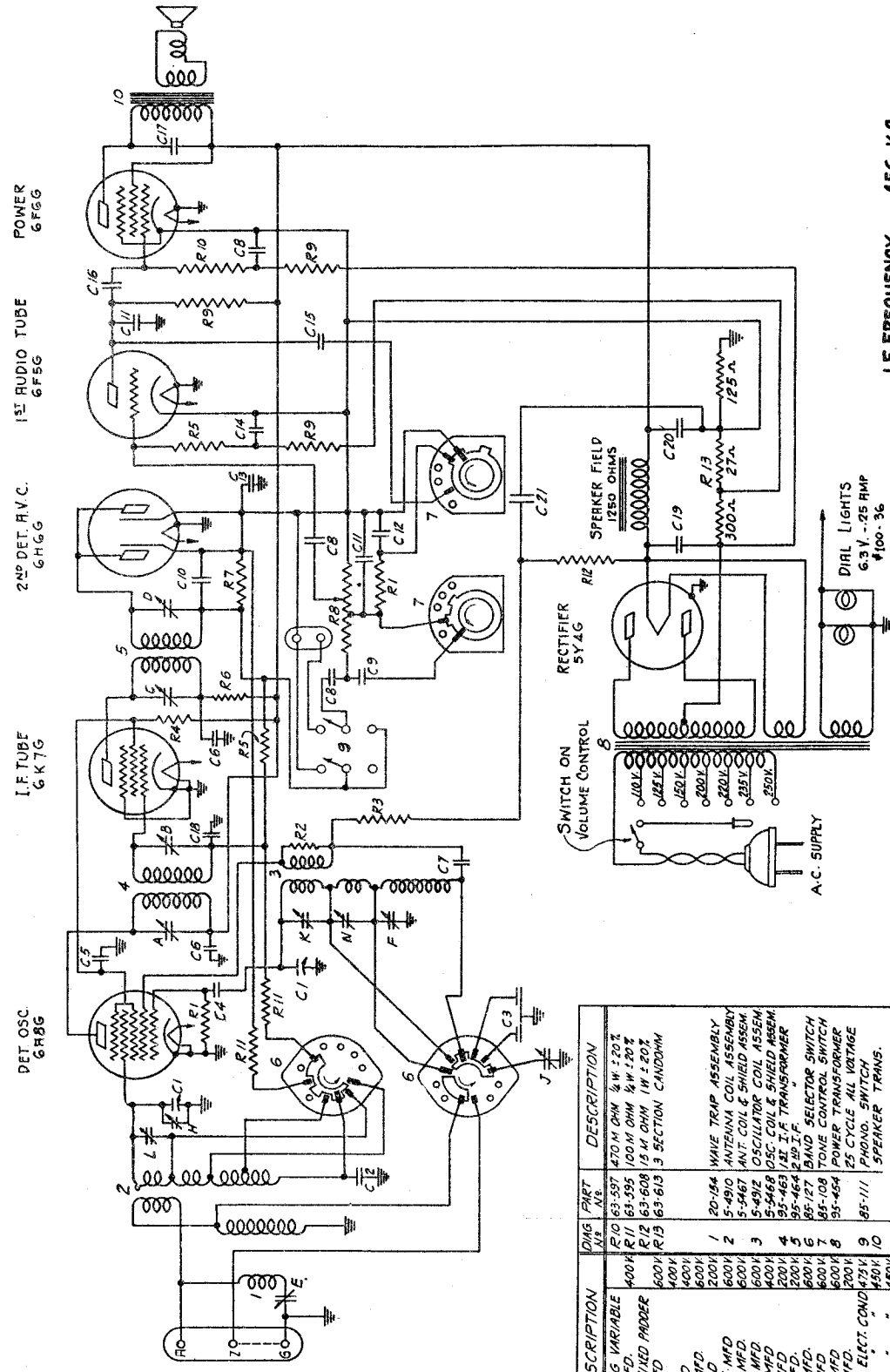

I.F. FREQUENCY 456 K.C.
6 TUBE SUPERHETERODYNE 3-BAND
CHASSIS No 5644 RT

ZENITH RADIO CORPORATION
CHICAGO, ILLINOIS.

SPEAKER	MODEL
49-216 10"	6S254AT
49-217 10"	6S256AT

NOTE:- TRIMMERS F, K AND N ARE MOUNTED ON BAKELITE STRIP PART #22-324

DIAG. NO.	PART NO.	DESCRIPTION
C1	22-547	2 GANG VARIABLE
C2	22-487	.05 MFD.
C3	22-558	DUAL FIXED PADDER
C4	22-127	25 MMFD
C5	22-170	.1 MFD
C6	22-212	.05 MFD
C7	22-358	.002 MFD.
C8	22-337	.02 MFD
C9	22-182	.00025 MFD
C10	22-162	.0001 MFD.
C11	22-147	.0005 MFD
C12	22-326	.003 MFD
C13	22-185	.01 MFD
C14	22-190	.1 MFD.
C15	22-448	.004 MFD.
C16	22-435	.02 MFD
C17	22-432	.002 MFD
C18	22-250	.05 MFD.
C19	22-633	8 MFD. ELECT. COND.
C20	"	16 MFD " "
C21	22-634	4 MFD. " "
R1	63-593	47 M OHM - ½ W ± 20%
R2	63-587	4700 OHM - ½ W ± 20%
R3	63-680	10 M OHM - 1 W ± 20%
R4	63-677	33 M OHM - 1 W ± 10%
R5	63-671	1 MEGOHM - ½ W ± 10%
R6	63-605	1000 OHM - ½ W ± 20%
R7	63-658	390 M OHM - ½ W ± 10%
R8	63-936	2 MEGOHM VOLUME CONT.
R9	63-796	220 M OHM ½ W ± 20%

DIAG. NO.	PART NO.	DESCRIPTION
R10	63-597	470 M OHM ½ W ± 20%
R11	63-595	100 M OHM ½ W ± 20%
R12	63-608	15 M OHM 1W ± 20%
R13	63-613	3 SECTION CANDOHM
1	20-154	WAVE TRAP ASSEMBLY
2	5-4910	ANTENNA COIL ASSEMBLY
3	5-5467	ANT. COIL & SHIELD ASSEM
	5-4912	OSCILLATOR COIL ASSEM.
	5-5468	OSC. COIL & SHIELD ASSEM.
4	95-463	1ST I.F. TRANSFORMER
5	95-464	2ND I.F.
6	85-127	BAND SELECTOR SWITCH
7	85-108	TONE CONTROL SWITCH
8	95-454	POWER TRANSFORMER
9	85-111	25 CYCLE ALL VOLTAGE PHONO. SWITCH SPEAKER TRANS.
10		
A		VARIABLE TRIMMERS
B		1ST I.F. TRANS. PRIMARY
C		1ST I.F. " SECONDARY
D		2ND I.F. " PRIMARY
E		2ND I.F. " SECONDARY
F		WAVE TRAP
H		BROADCAST OSCILLATOR (SEE NOTE)
J	22-519	ANTENNA BROADCAST (GN GANG)
K		BROADCAST PADDER
L	22-305	SHORT WAVE OSC. (SEE NOTE)
N		SHORT WAVE DETECTOR
		POLICE BAND OSC. (SEE NOTE)

©John F. Rider, Publisher

MODELS 6S254AT, 6S256AT
Chassis 5644AT
Voltage, Socket
Trimmers, Alignment

ZENITH RADIO CORP.

SOCKET VOLTAGES

Tube	Position	1	2	3	4	5	6	7	8	9
6A8	Converter Osc.	0	6.2	246	90	—9	190	0	0	—.5
6K7	I.F.	0	6.2	237	90	0	—	0	0	—.5
6H6	2nd Det. A.V.C.	0	0	—2.5	—2	—2.5	—	6.2	—2	—
6F5	1st Audio	0	0	—	104	—	—	6.2	—2	—2
6F6	Power	0	0	231	243	—3	—	6.2	—2	—
5Y4	Rect.	0	—	AC	—	AC	—	314	314	—

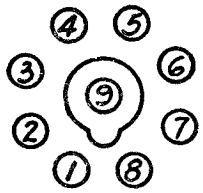

BOTTOM VIEW OF SOCKET

All voltages measured from point indicated to ground using a 1000 Ohm per Volt meter, antenna and ground disconnected. Line voltage 117V. Consumption 65W. Power output 4.5W.

ALIGNMENT PROCEDURE

Operation	Connect Test Oscillator to—	Dummy Antenna	Set Test Osc. to	Band	Set Dial At	Adjust Trimmers	Purpose
1	1st Det. Grid	1/2 Mfd.	456	Br'dc't	600	ABCD	I. F. Alignment
2	Rec. Ant. Post	200 Mmfd.	456	"	600	E	See Note
3	" " "	200 Mmfd.	1500	"	1500	F	Set Osc. to Scale
4	" " "	200 Mmfd.	1500	"	1500	G	Al'gment of Ant.
5	" " "	200 Mmfd.	600	"	600	J	Rock gang & adj. for max. output
6	" " "	200 Mmfd.				FG	Repeat 3 & 4
7	" " "	400 Ohms	18000	S.W.	18000	K	Set Osc. to Scale
8	" " "	400 Ohms	16500	S.W.	16500	L	Rock gang & adj. for max. output
9	" " "	400 Ohms	5500	Police	5500	N	Rock gang & adj. for max. output

NOTE: If receiver is used in a location subject to code interference adjust wave trap (E) for minimum interference with antenna connected and receiver operating in broadcast band.

LOCATION OF TRIMMERS

Chassis No. 5644AT

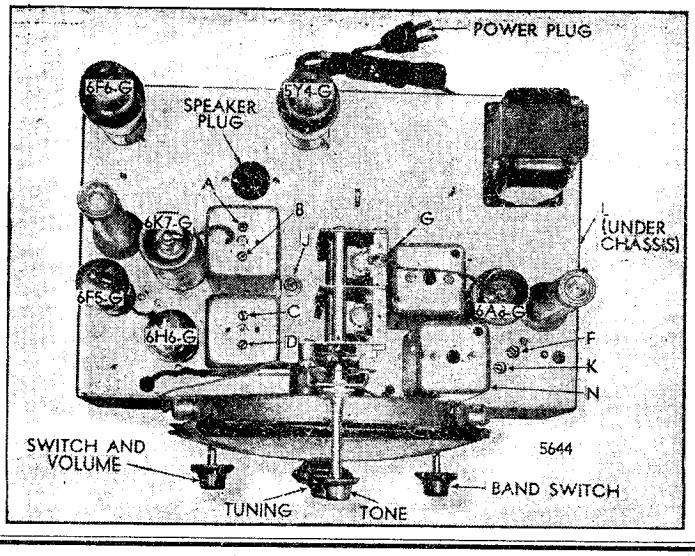

©John F. Rider, Publisher

ZENITH RADIO CORP.

MODELS 6S341,6S362
Chassis 5649
Schematic,Parts

FOR TUNER DATA,SEE
SPECIAL SECTION

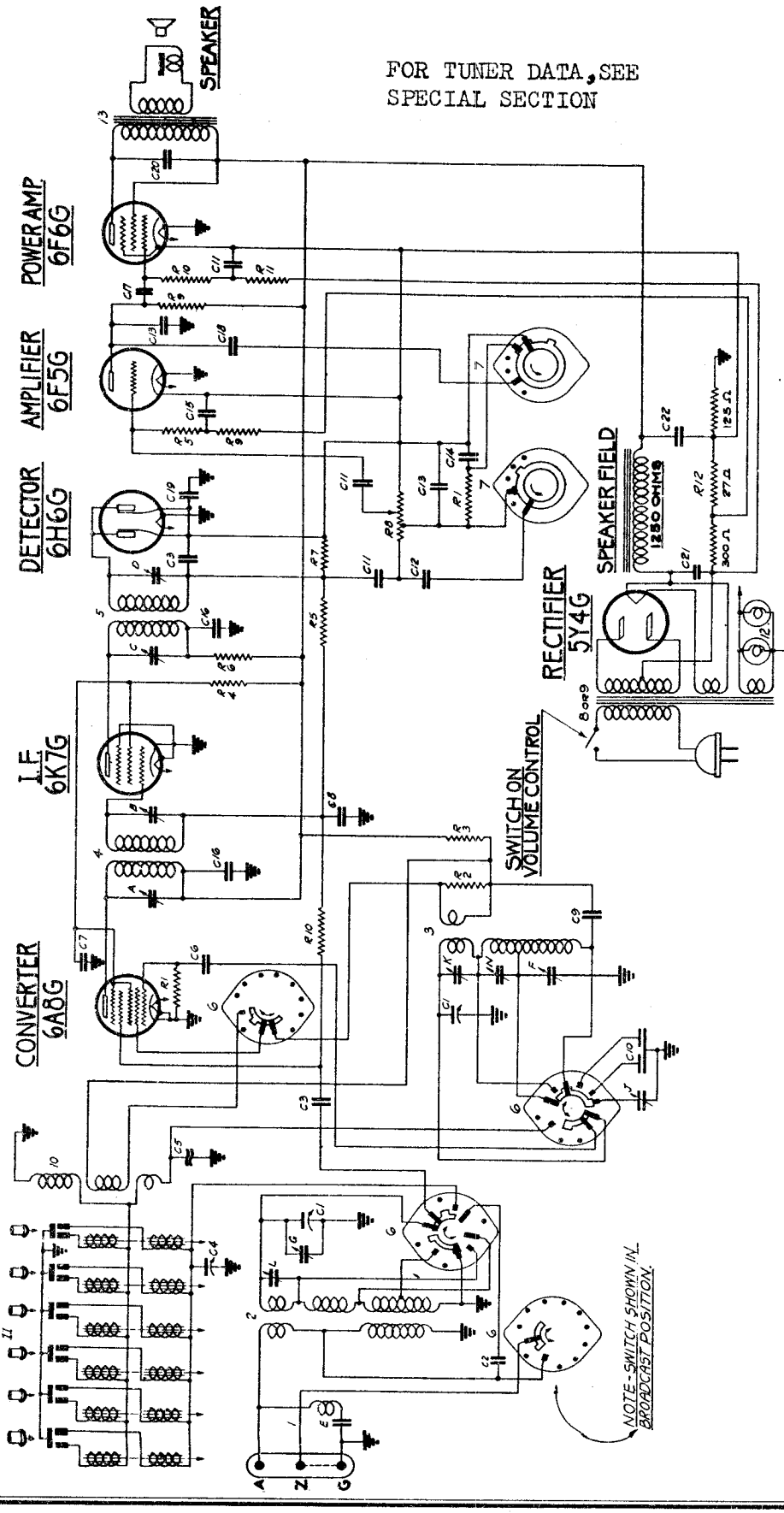

SPEAKER	MODEL
49-206-8"	6S-341
49-208-10"	6S-362

I.F. FREQUENCY 456K.C.
6-TUBE SUPERHETERODYNE
CHASSIS Nº 5649-A.C. 3-BAND
ZENITH RADIO CORPORATION
CHICAGO, ILL.

DIAG. Nº	PART Nº	DESCRIPTION	
C-1	22-547	TWO GANG VARIABLE	
C-2	22-289	50 MMFD.	600V
C-3	22-162	.0001 MFD.	600V
C-4	22-519	TRIMMER CONDENSER	
C-5	22-705	COMPENSATING COND.	
C-6	22-127	25 MMFD.	600V
C-7	22-170	.1 MFD.	400V
C-8	22-250	.05 MFD.	200V
C-9	22-358	.002 MFD.	600V
C-10	22-558	DUAL FIXED PADDER	
C-11	22-327	.02 MFD.	200V
C-12	22-182	.00025 MFD.	600V
C-13	22-147	.0005 MFD.	600V
C-14	22-326	.003 MFD.	400V
C-15	22-190	.1 MFD.	200V
C-16	22-212	.05 MFD.	400V
C-17	22-435	.02 MFD.	600V
C-18	22-448	.004 MFD.	600V
C-19	22-185	.01 MFD.	200V

DIAG. Nº	PART Nº	DESCRIPTION	
C-20	22-492	.002 MFD.	600V
C-21	22-551	16 MFD. WET ELECTROL	400V
C-22	22-552	20 MFD. WET ELECTROL	300V
R-1	63-593	47 MOHM	1/4 W
R-2	63-587	4700 OHM	1/4 W
R-3	63-680	10 MOHM	1 W
R-4	63-677	33 MOHM	1 W
R-5	63-271	1 MEGOHM	1/4 W
R-6	63-605	1000 OHM	1/2 W
R-7	63-658	390 MOHM	1/4 W
R-8	63-799	2 MEGOHM VOL. CONTROL	
R-9	63-296	220 MOHM	1/4 W
R-10	63-597	470 MOHM	1/4 W
R-11	63-325	150 MOHM	1/4 W
R-12	63-613	3 SECTION CANDOHM	

DIAG. Nº	PART Nº	DESCRIPTION
1	20-154	WAVE TRAP ASSEMBLY
2	J-5073	ANTENNA COIL & SHIELD ASSEM.
3	J-5074	OSC. COIL & SHIELD ASSEMBLY
4	95-416	1ST I.F. TRANSFORMER
5	95-417	2ND I.F. TRANSFORMER
6	85-140	BAND SELECTOR SWITCH
7	85-108	TONE CONTROL SWITCH
8	95-438	POWER TRANS (117V 50-60~)
9	95-454	POWER TRANS (ALL VOLTAGE) 25~
10	20-183	COMPENSATING COIL
11		
12	100-36	PILOT LIGHT 25A-6.3V
13		SPEAKER TRANSFORMER

DIAG. Nº	PART Nº	DESCRIPTION
A		1ST I.F. TRANS. PRI
B		1ST I.F. TRANS. SEC
C		2ND I.F. TRANS. PRI
D		2ND I.F. TRANS. SEC
E		WAVE TRAP
F		BROADCAST OSC. (SEE NOTE)
G		ANT. BROADCAST (ON GANG)
J	22-519	BROADCAST PADDER
K		SHORT WAVE OSC. (SEE NOTE)
L	22-305	SHORT WAVE DETECTOR
N		POLICE BAND OSC. (SEE NOTE)

NOTE - TRIMMERS F-K & N MOUNTED ON BAKELITE STRIP - PART Nº 22-324.

©John F. Rider, Publisher

MODELS 6S341,6S362
Chassis 5649
Voltage,Socket
Trimmers,Alignment

ZENITH RADIO CORP.

Voltages measured from socket contacts to chassis using a 1000 ohm per volt meter. Antenna disconnected — volume control on full.

Line voltage 115 v. Consumption 65 watts.

Power output 4.5 watts.

(A) Bias for 6A8 — 6K7 and 6H6 measured across X which is — 2.5 volts.

(B) Bias for 6F5 measured across X and Y which is neg. 4 volts.

(C) Bias for 6F6 measured across XY and Z which is neg. 16 volts.

LEGEND

NC — No Connection
SH — Shield
H — Heater
P — Plate
S — Screen
G — Grid
SU — Suppressor
D — Diode
K — Cathode
F — Filament

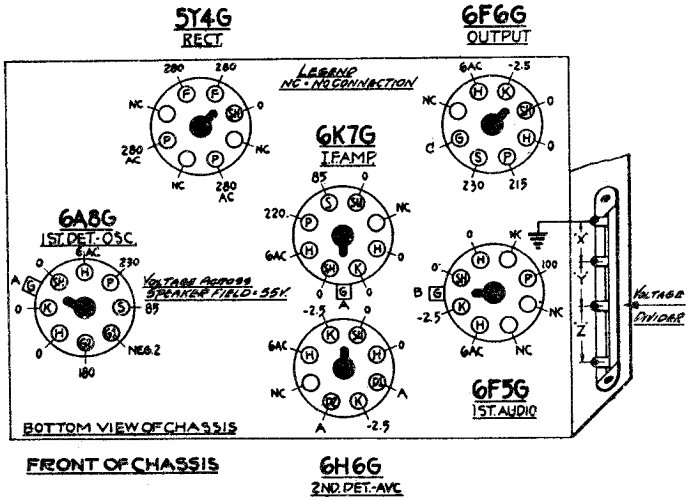

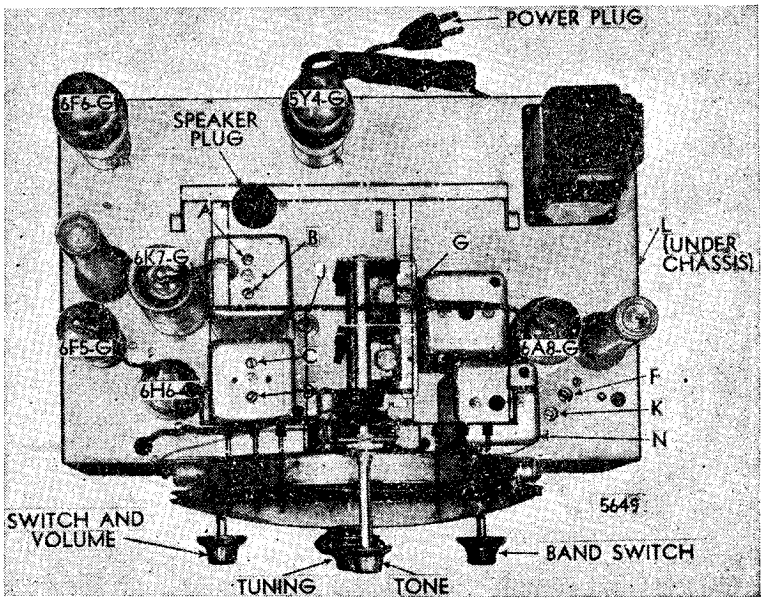

Location of Tubes and Trimmers

Models 6S341, 6S362

CHASSIS No. 5649

ALIGNMENT PROCEDURE

Operation	Connect Test Oscillator to	Dummy Antenna	Set Test Osc. to	Band	Set Dial At	Adjust Trimmers	Purpose
1	1st Det. Grid	1/2 Mfd.	456	Br'dc't	600	ABCD	I. F. Alignment
2	Rec. Ant. Post	200 Mmfd.	456	"	600	E	See Note
3	" " "	200 Mmfd.	1500	"	1500	F	Set Osc. to Scale
4	" " "	200 Mmfd.	1500	"	1500	G	Al'gment of Ant.
5	" " "	200 Mmfd.	600	"	600	J	Rock gang & adj. for max. output
6	" " "	200 Mmfd.		"		FG	Repeat 3 & 4
7	" " "	400 Ohms	18000	S.W.	18000	K	Set Osc. to Scale
8	" " "	400 Ohms	16500	S.W.	16500	L	Rock Gang & adj. for max. output
9	" " "	400 Ohms	5500	Police	5500	N	Rock Gang & adj. for max. output

NOTE: If receiver is used in location subject to code interference adjust wave trap (E) for minimum interference with antenna connected and receiver operating in broadcast band.

©John F. Rider, Publisher

ZENITH RADIO CORP.

MODELS 7J232T, 7J259T
Chassis 5711T
Schematic, Parts

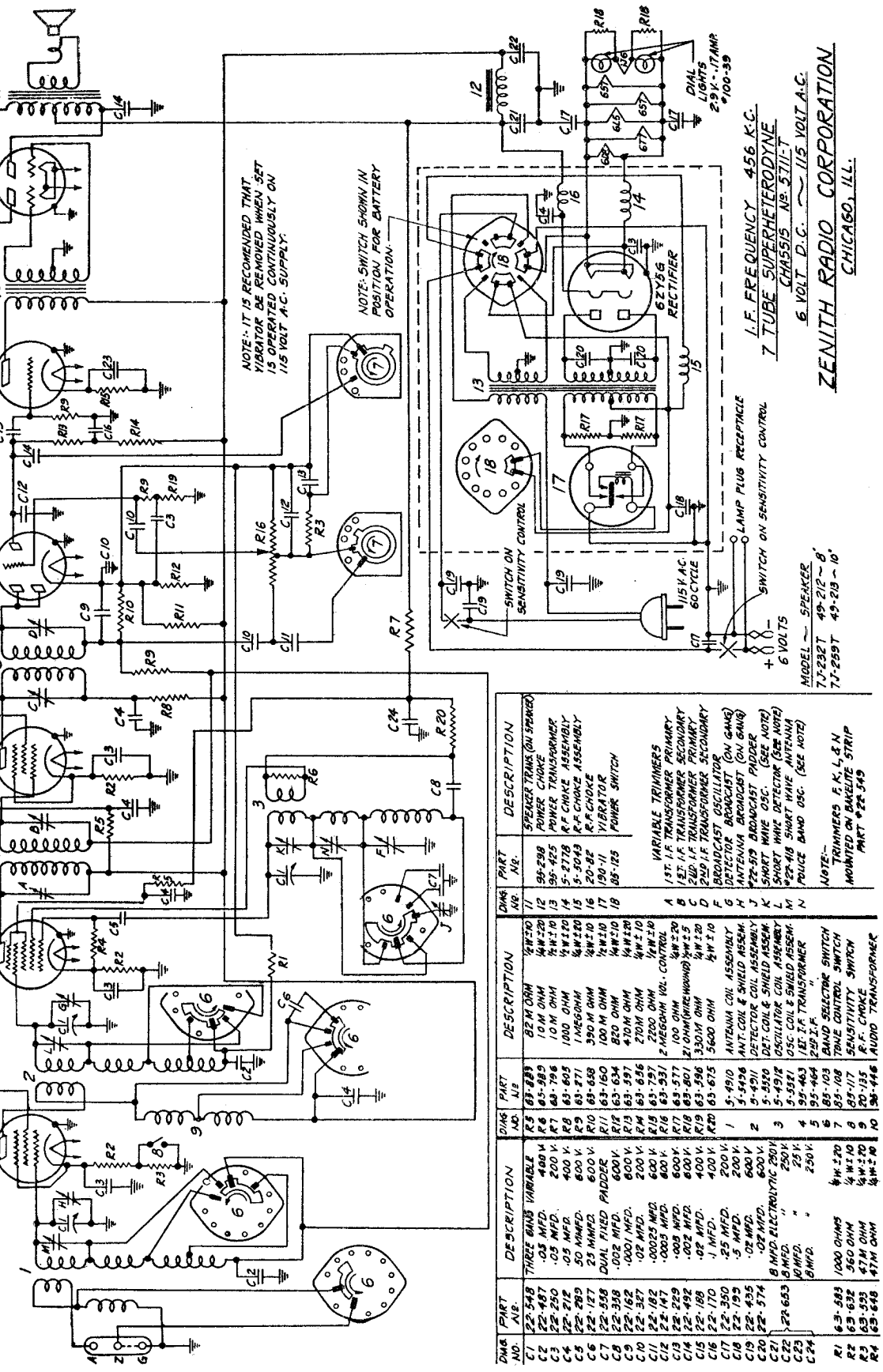

DIAG. NO.	PART NO.	DESCRIPTION
C1	22-548	THREE GANG VARIABLE
C2	22-487	.03 MFD. 400 V.
C3	22-250	.05 MFD. 200 V.
C4	22-212	.05 MFD. 400 V.
C5	22-289	.50 MMFD. 600 V.
C6	22-127	25 MMFD. 600 V.
C7	22-558	DUAL FIXED PADDER
C8	22-338	.002 MFD. 600 V.
C9	22-162	.0001 MFD. 600 V.
C10	22-327	.02 MFD. 200 V.
C11	22-182	.00025 MFD. 600 V.
C12	22-147	.0003 MFD. 600 V.
C13	22-229	.009 MFD. 600 V.
C14	22-492	.002 MFD. 600 V.
C15	22-188	.02 MFD. 400 V.
C16	22-170	.1 MFD. 400 V.
C17	22-350	.25 MFD. 200 V.
C18	22-193	.5 MFD. 200 V.
C19	22-435	.02 MFD. 600 V.
C20	22-574	.02 MFD. 600 V.
C21	2R 653	8 MFD. ELECTROLYTIC 250 V.
C22		8 MFD. " 250 V.
C23		10 MFD. " 25 V.
C24		8 MFD. " 250 V.
R1	63-583	1000 OHMS ½ W ±10
R2	63-632	360 OHM ½ W ±10
R3	63-535	47M OHM ½ W ±20
R4	63-648	47M OHM ½ W ±10

DIAG. NO.	PART NO.	DESCRIPTION
R5	63-889	82 M OHM ½ W ±10
R6	63-589	10 M OHM ¼ W ±20
R7	63-796	10 M OHM ½ W ±10
R8	63-605	100 OHM ½ W ±10
R9	63-871	1 MEGOHM ¼ W ±10
R10	63-658	390 M OHM ½ W ±10
R11	63-660	100 M OHM ½ W ±10
R12	63-634	820 OHM ¼ W ±10
R13	63-597	470 M OHM ¼ W ±10
R14	63-656	270 M OHM ¼ W ±10
R15	63-791	2200 OHM ½ W ±10
R16	63-533	2 MEGOHM VOL. CONTROL
R17	63-577	100 OHM (WIREWOUND) ¼ W ±20
R18	63-801	21 OHM (WIREWOUND) ½ W ±5
R19	63-596	330 M OHM ½ W ±20
R20	63-675	5600 OHM ½ W ±10
1	5-4910	ANTENNA COIL ASSEMBLY
	5-5436	ANT. COIL & SHIELD ASSEM.
2	5-4911	DETECTOR COIL ASSEMBLY
	5-5520	DET. COIL & SHIELD ASSEM.
3	5-4912	OSCILLATOR COIL ASSEMBLY
	5-5521	OSC. COIL & SHIELD ASSEM.
4	95-463	1ST I.F. TRANSFORMER
5	95-464	2ND I.F. "
6	85-103	BAND SELECTOR SWITCH
7	85-108	TONE CONTROL SWITCH
8	69-117	SENSITIVITY SWITCH
9	20-135	R.F. CHOKE
10	30-446	AUDIO TRANSFORMER

DIAG. NO.	PART NO.	DESCRIPTION
11	99-238	SPEAKER TRANS. (ON SPEAKER)
12	96-425	POWER CHOKE
13	5-2778	POWER TRANSFORMER
14	5-3043	R.F. CHOKE ASSEMBLY
15	5-3043	R.F. CHOKE ASSEMBLY
16	20-82	R.F. CHOKE
17	190-11	VIBRATOR
18	85-125	POWER SWITCH
		VARIABLE TRIMMERS
A		1ST. I.F. TRANSFORMER PRIMARY
B		1ST. I.F. TRANSFORMER SECONDARY
J		2ND. I.F. TRANSFORMER PRIMARY
C		2ND I.F. TRANSFORMER SECONDARY
D		BROADCAST OSCILLATOR
F		DETECTOR BROADCAST (ON GANG)
G		ANTENNA BROADCAST (ON GANG)
H	*22-919	BROADCAST PADDER
K		SHORT WAVE OSC. (SEE NOTE)
L		SHORT WAVE DETECTOR (SEE NOTE)
M	*22-418	SHORT WAVE ANTENNA
N		POLICE BAND OSC. (SEE NOTE)
		NOTE:- TRIMMERS F, K, L & N MOUNTED ON BAKELITE STRIP PART #22-549

©John F. Rider, Publisher

MODELS 7J232T, 7J259T
Chassis 5711T
Voltage, Socket
Trimmers, Alignment

ZENITH RADIO CORP.

ALIGNMENT PROCEDURE

Operation	Connect Test Oscillator to—	Dummy Antenna	Set Test Osc. to	Band	Set Dial At	Adjust Trimmers	Purpose
1	1st Det. Grid	1/2 Mfd.	456	Br'dc't	600	ABCD	I. F. Alignment
2	Rec. Ant. Post	200 Mmfd.	1500	"	1500	F	Set Osc. to Scale
3	" " "	200 Mmfd.	1500	"	1500	GH	Algnt.of Ant.&Det
4	" " "	200 Mmfd.	600	"	600	J	Rock gang & adj. for max. output
5				"		FGH	Repeat 2 & 3
6	Rec. Ant. Post	400 Ohms	18000	S.W.	18000	K	Set Osc. to Scale
7	" " "	400 Ohms	16500	S.W.	16500	LM	Rock gang & adj. for max. output
8	" " "	400 Ohms	5500	Police	5500	N	Rock gang & adj. for max. output

SOCKET VOLTAGES

Tube	Position	1	2	3	4	5	6	7	8	9
6S7	R.F.	0	6.3	126	34	1.5	—	0	1.5	0
6D8	Converter Osc.	0	6.3	126	34	—.1	106	0	1	0
6S7	I.F.	0	6.3	123	34	1	—	0	1	0
6T7	2nd Det. AVC 1st Audio	0	6.3	15	.1	.1	—	0	1	0
6L5	2nd Audio	0	6.3	122	—	0	—	0	4.5	—
1J6	Power	—	1	133	0	0	133	3	—	—
6ZY5G	Rect.	0	6.3	AC	—	AC	—	0	137	—

All voltages measured from point indicated to ground using a 1000 Ohm per Volt meter, antenna and ground disconnected. Line voltage 117V. Consumption 19W. Battery voltage 6.3V consumption 2.19 Amp. Power output 1.75W.

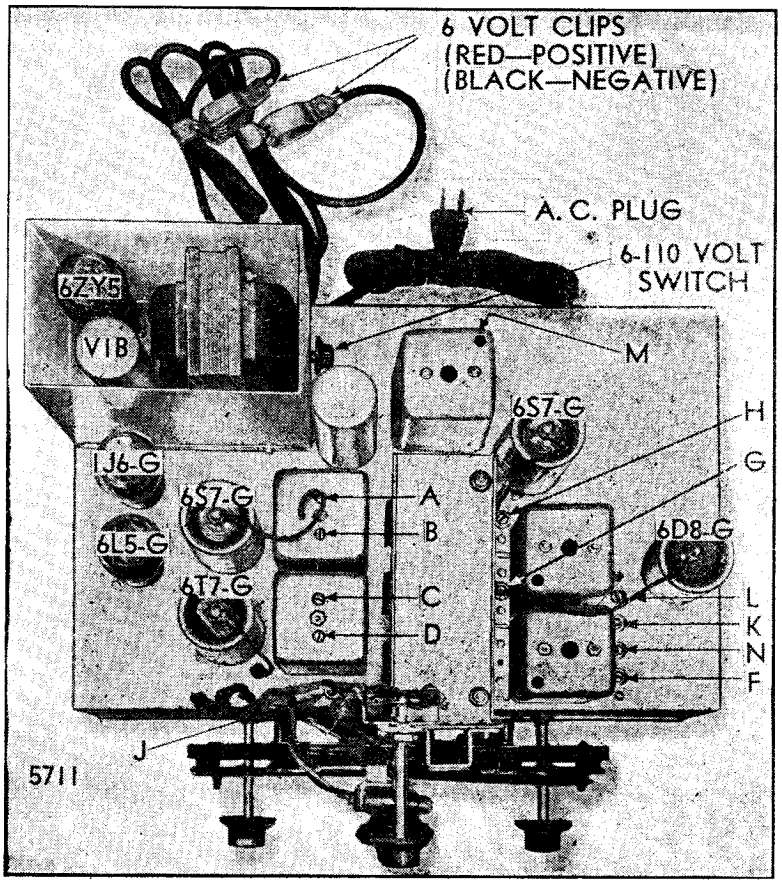

LOCATION OF TRIMMERS

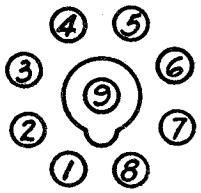

BOTTOM VIEW OF SOCKET

Chassis No. 5711T

©John F. Rider, Publisher

ZENITH RADIO CORP.

MODELS 7J323, 7J368
Chassis 5715
Schematic, Parts

FOR TUNER DATA, SEE SPECIAL SECTION

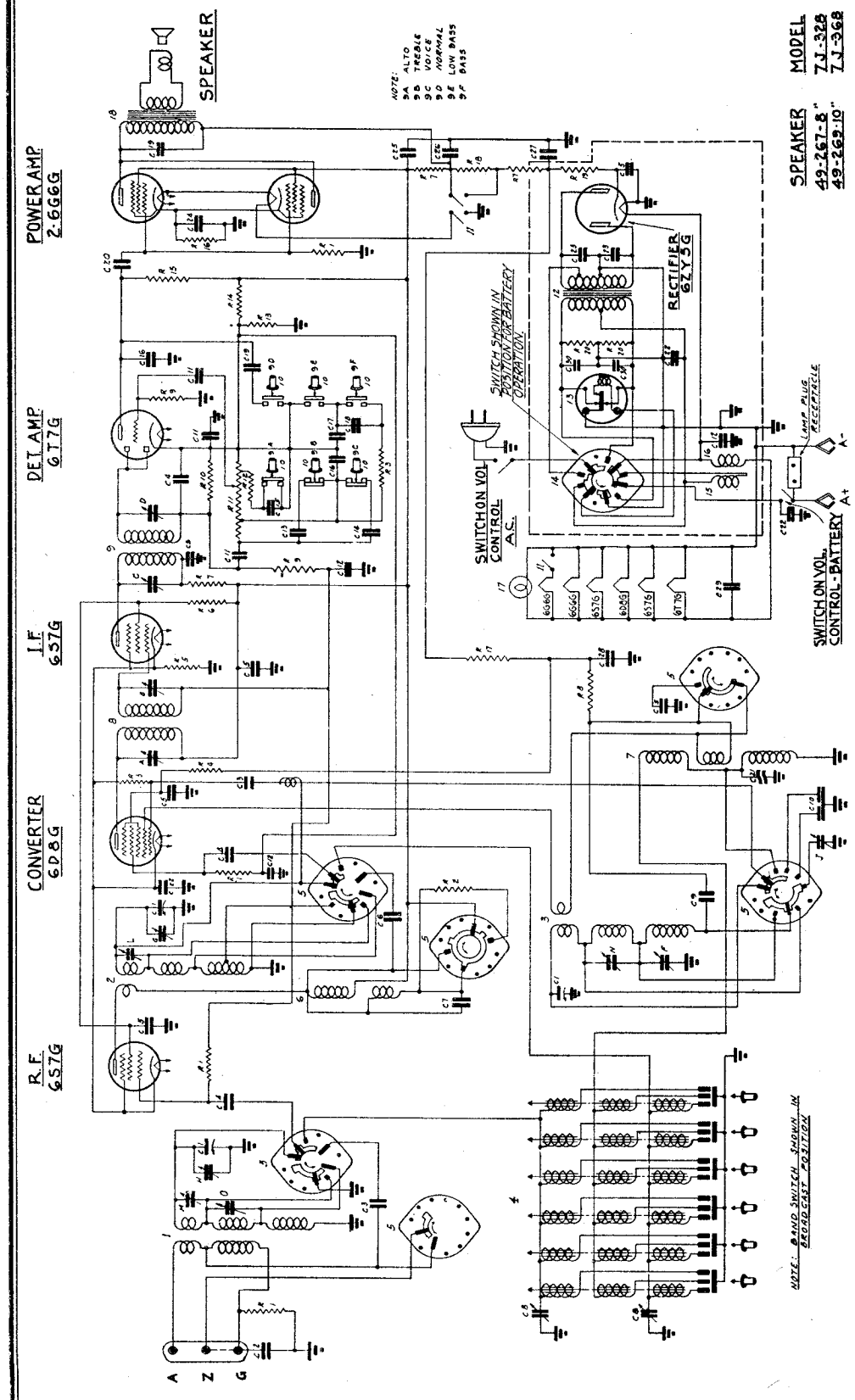

MODEL	SPEAKER
7J-328	49-267-8"
7J-368	49-269-10"

6 VOLT D.C. 110 VOLT A.C.
I.F. FREQUENCY 455 K.C.
7 TUBE SUPERHETERODYNE
CHASSIS № 5715 3 BAND
ZENITH RADIO CORPORATION
CHICAGO, ILL.

DIAG NO	PART NO	DESCRIPTION
C1	22-346	THREE GANG VAR
C2	22-196	.01 MFD
C3	22-289	.50 MMFD
C4	22-162	.000 MFD
C5	22-212	.05 MFD
C6	22-285	.10 MMFD
C7	22-127	.25 MMFD
C8	22-358	700 MMFD COND
C9	22-358	.002 MFD
C10	22-208	DUAL FILED PADDER
C11	22-327	.02 MFD
C12	22-240	.05 MFD
C13	22-182	.00025 MFD
C14	22-270	.00016 MFD
C15	22-185	.01 MFD
C16	22-147	.005 MFD
C17	22-448	.008 MFD
C18	22-336	.003 MFD
C19	22-448	.004 MFD
C20	22-188	.02 MFD

DIAG NO	PART NO	DESCRIPTION
C21	22-350	COMPENSATING COND
C22	22-350	25 MFD
C23	22-274	.02 MFD
C24	22-205	.10 MFD ELECT.
C25		.10 MFD ELECT.
C26	22-242	.15 MFD ELECT.
C27		.15 MFD ELECT.
C28	22-241	.5 MFD ELECT.
C29	22-199	.5 MFD
C30	22-319	.005 MFD
R1	63-597	470 M OHM
R2	63-525	2200 OHM
R3	63-593	47 M OHM
R4	63-659	56000 OHM
R5	63-627	180 OHM
R6	63-585	82000 OHM
R7	63-605	1200 OHM
R8	63-675	5600 OHM
R9	63-271	1 MEGOHM
R10	63-655	220,000 OHM

DIAG NO	PART NO	DESCRIPTION
R11	63-990	VOL CONT.
R12	63-591	22,000 OHM
R13	63-634	820 OHM
R14	63-661	100 M OHM
R15	63-596	220 M OHM
R16	63-586	100 OHM
R17	63-596	470 OHM
R18	63-577	100 OHM
R19	63-563	150 OHM
1	3-6241	ANT COIL & SHIELD ASSEM
2	3-6208	DET COIL & SHIELD ASSEM
3	3-6208	OSC COIL & SHIELD ASSEM
4		

DIAG NO	PART NO	DESCRIPTION
5	85-147	BAND SELECTOR SW.
6	20-189	4 PC CHASIS
7	20-196	COMPENSATING CAP.
8	95-362	1ST I.F. TRANS
9	95-361	2ND I.F. TRANS
10	14-622	SIGNAL FREQ. ASSEM
11	14-622	ANT. CONVERTER SW
12	95-555	POWER TRANSFORMER
13	90-11	VIBRATOR
14	95-155	POWER SUPPLY SW.
15	3-5043	CHOKE ASSEMBLY
16	3-2178	CHOKE ASSEM
17	180-67	PILOT LIGHT 6.3V .15A
18		SPEAKER TRANS.
A		1ST I.F. TRANS. PRI.
B		1ST I.F. TRANS SEC.
C		2ND I.F. TRANS. PRI.
D		2ND I.F. TRANS. SEC.

DIAG NO	PART NO	DESCRIPTION
F		BROADCAST ANT. COIL (SEE NOTE)
G		DETECTOR BROADCAST (GANG)
H		ANT. BROADCAST OSC. (GANG)
J	22-463	BROADCAST PADDER
K		SHORT WAVE ANT. COIL (SEE NOTE)
L	21-305	SHORT WAVE DETECTOR
M		POLICE BAND ANT. (SEE NOTE)
N		POLICE BAND OSC.
O	21-305	POLICE BAND ANTENNA

NOTE: TRIMMERS F, L & M ARE MOUNTED ON BANDSWITCH STRIP PART # 22-580.

©John F. Rider, Publisher

MODELS 7J323, 7J368
Chassis 5715
Voltage, Socket
Trimmers, Alignment

ZENITH RADIO CORP.

Models 7J323, 7J368
CHASSIS No. 5715

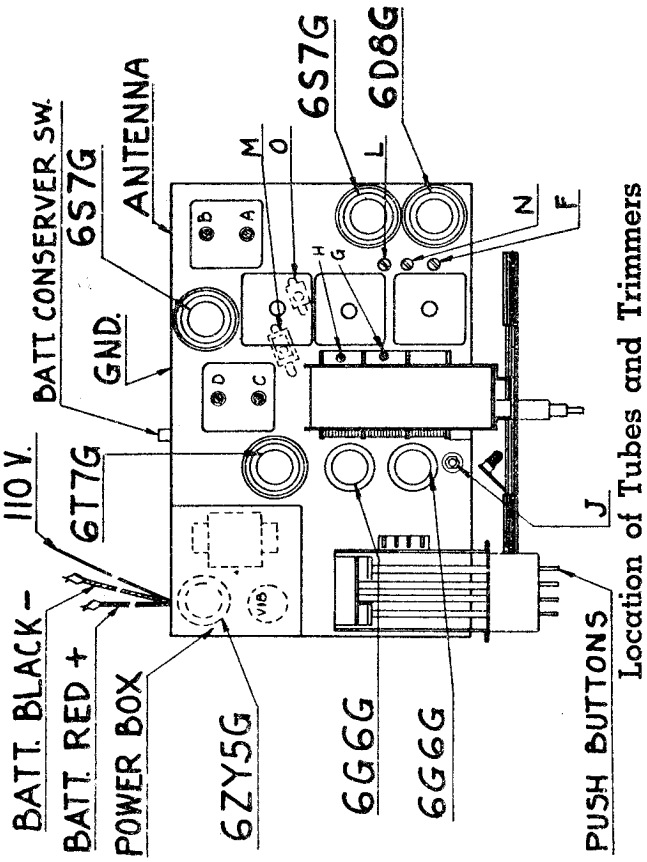

ALIGNMENT PROCEDURE

Operation	Connect Test Oscillator to	Dummy Antenna	Set Test Osc. to	Band	Set Dial At	Adjust Trimmers	Purpose
1	1st Det. Grid	1/2 Mfd.	455	Br'dc't	600	ABCD	I. F. Alignment
2	Rec. Ant. Post	200 Mmfd.	1500	"	1500	F	Set Osc. to Scale
3	" " "	200 Mmfd.	1500	"	1500	GH	Al'gment of Ant. and Det.
4	" " "	200 Mmfd.	600	"	600	J	Rock gang & adj. for max. output
5	" " "	200 Mmfd.		"		FGH	Repeat 2 & 3
6	" " "	400 Ohms	18000	S.W.	18000	K	Set Osc. to scale
7	" " "	400 Ohms	18000	S.W.	18000	M	Rock gang & adj. for max. output
8	" " "	400 Ohms	6000	Police	6000	N	Rock gang & adj. for max. output

NOTE

Voltages measured from socket contacts to chassis using a 1000 ohm per volt meter with chassis operating on 110 volt A.C.

Line voltage 115 V. A.C. consumption 18 watts.

Battery voltage at chassis 6 volts.

Consumption with switch in normal position 2.6 amperes.

Consumption with switch in conserv. position 2.2 amperes.

Power output 1 watt.

(A) Bias for 6D8 and 6S7 R.F. and I.F. tubes measured at K of respective sockets which is +1.6 volts.

(B) Bias for 6T7 triode section measured at K of 6T7 socket which is +1 volt.

(C) Bias for 6G6 tubes measured at K of respective sockets which is +7 volts

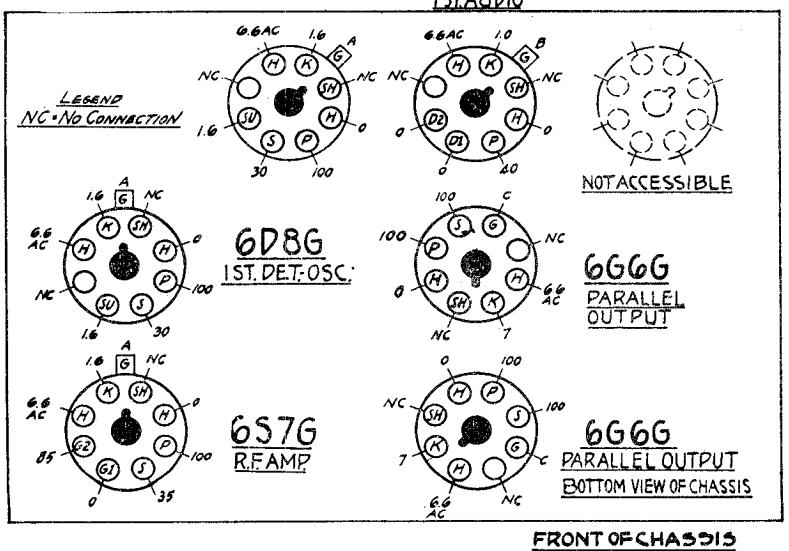

©John F. Rider, Publisher

ZENITH RADIO CORP.

MODELS 7S232AT, 7S240AT
7S242AT, 7S258AT, 7S260AT
Chassis 5709AT
Schematic, Parts

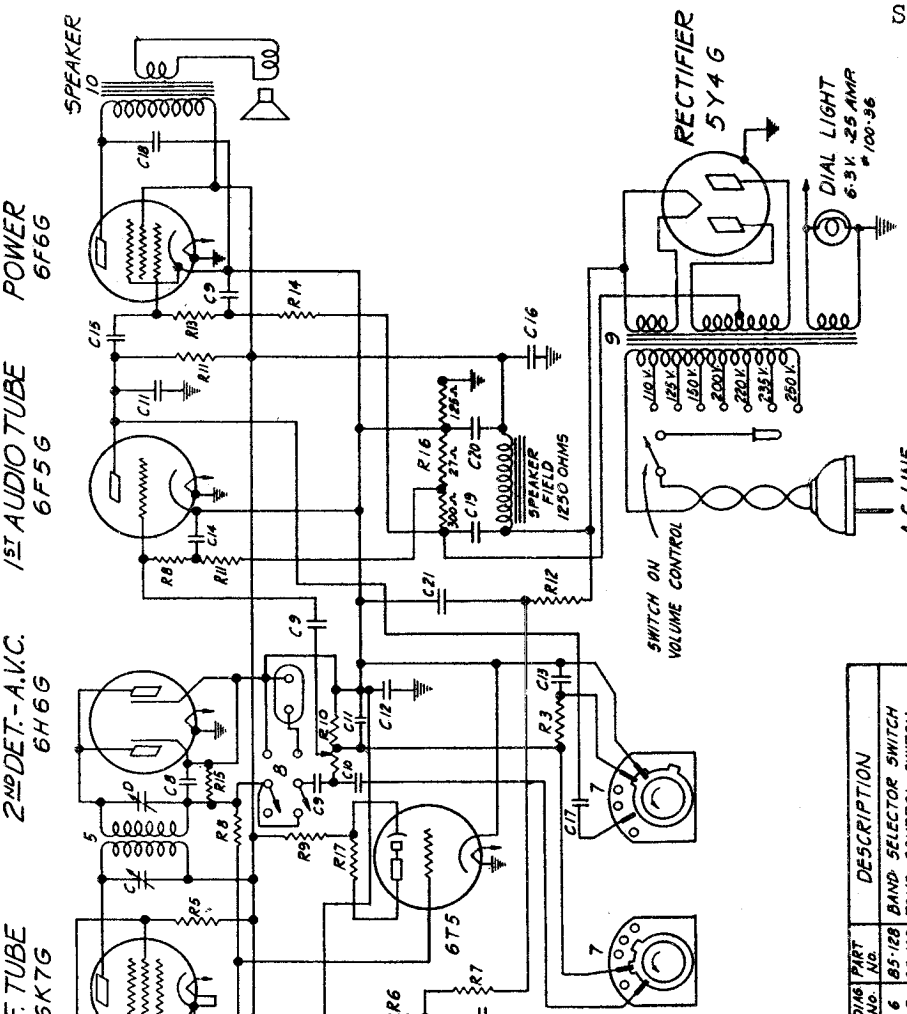

I.F. FREQUENCY 456 K.C.
7 TUBE SUPERHETERODYNE
3 BAND
CHASSIS No 5709-AT

ZENITH RADIO CORP.
CHICAGO, ILLINOIS

DIAG No	PART No	DESCRIPTION
R1	63-583	1000 OHM ½ W ± 20%
R2	63-595	100 M OHM ½ W ± 20%
R3	63-593	47 M OHM ½ W ± 20%
R4	63-605	1000 OHM ½ W ± 20%
R5	63-617	33 M OHM 1 W ± 10%
R6	63-587	4700 OHM ½ W ± 10%
R7	63-680	10 M OHM 1 W ± 20%
R8	63-271	1 MEGOHM ½ W ± 20%
R9	63-609	22 M OHM ½ W ± 20%
R10	63-935	2 MEGOHM VOLUME CONTROL
R11	63-296	220 M OHM ½ W ± 20%
R12	63-608	15 M OHM 1 W ± 20%
R13	63-597	470 M OHM ½ W ± 20%
R14	63-325	150 M OHM ½ W ± 20%
R15	63-658	330 M OHM ½ W ± 10%
R16	63-613	3 SECTION CANDOHM
R17		1 MEGOHM MOUNTED IN TUNING TUBE SOCKET
C1	22-548	THREE GANG VARIABLE
C2	22-487	.05 MFD 400 V.
C3	22-170	.1 MFD 400 V.
C4	22-127	23 MMFD DUAL FIXED PADDER 600 V.
C5	22-558	.002 MFD 600 V.
C6	22-358	10 MMFD CERAMIC
C7	22-601	.0001 MFD. 600 V.
C8	22-162	.02 MFD. 600 V.
C9	22-327	.00025 MFD. 600 V.
C10	22-182	.005 MFD. 600 V.
C11	22-147	.01 MFD. 200 V.
C12	22-185	.003 MFD. 400 V.
C13	22-326	

DIAG No	PART No	DESCRIPTION
C14	22-190	.1 MFD 200 V.
C15	22-435	.02 MFD 600 V.
C16	21-212	.05 MFD. 400 V.
C17	22-448	.004 MFD. 600 V.
C18	22-627	.002 MFD. 1000 V.
C19	22-633	8 MFD. DRY ELECTROLYTIC 475 V.
C20		16 MFD. " " 450 V.
C21	{22-634	4 MFD. " " 450 V.
A		VARIABLE TRIMMERS
B		1ST I.F. TRANSFORMER PRIMARY
C		1ST I.F. " SECONDARY
D		2ND I.F. " PRIMARY
E		2ND I.F. " SECONDARY
F		BROADCAST OSCILLATOR (SEE NOTE)
G		DETECTOR BROADCAST (ON GANG)
H		ANTENNA BROADCAST (ON GANG)
J		22-519 BROADCAST PADDER
K		SHORT WAVE OSCILLATOR (SEE NOTE)
L		SHORT WAVE DETECTOR (SEE NOTE)
N		POLICE BAND OSCILLATOR (SEE NOTE)
		NOTE:- TRIMMERS F, K, L, N ARE MOUNTED ON BAKELITE STRIP #22-549
1	5-4780	ANTENNA COIL ASSEMBLY
2	5-5046	DETECTOR COIL ASSEMBLY
3	5-5490	DETECTOR COIL & SHIELD ASSEM.
	5-4912	OSC. COIL ASSEMBLY
	5-5489	OSC. COIL & SHIELD ASSEMBLY
4	95-463	1ST I.F. TRANSFORMER
5	95-464	2ND " "

DIAG No.	PART No.	DESCRIPTION
6	85-128	BAND SELECTOR SWITCH
7	85-108	TONE CONTROL SWITCH
8	85-111	PHONOGRAPH SWITCH
9	95-451	POWER TRANS. 25~ ALL VOLTAGE
10		SPEAKER TRANSFORMER

MODEL	SPEAKER	
7S 232 AT	49-218	8"
7S 240 AT	49-219	8"
7S 242 AT	49-219	8"
7S 258 AT	49-217	10"
7S 260 AT	49-220	12"

©John F. Rider, Publisher

MODELS 7S232AT, 7S240AT
7S242AT, 7S258AT, 7S260AT
Chassis 5709AT
Voltage, Socket
Trimmers, Alignment

ZENITH RADIO CORP.

SOCKET VOLTAGES

Tube	Position	1	2	3	4	5	6	7	8	9
6A8	Converter Osc.	0	6.4	255	89	—10	182	0	0	—2
6K7	I.F.	0	6.4	243	89	0	—	0	0	—2
6H6	2nd Det. A.V.C.	0	0	—2	—2	—2	—	6.4	—2	—
6F5	1st Audio	0	0	—	117	—	—	6.4	—1.5	—1.5
6F6	Power	0	0	243	255	—2	—	6.4	—2	—
5Y4	Rect.	0	—	AC	—	AC	—	328	328	—
		H	Ep	Eg	Et	Ek	H			
6T5	Target	0	16	—2	255	—2	6.4			

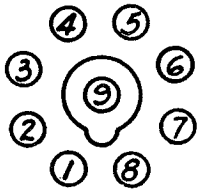

BOTTOM VIEW OF SOCKET

All voltages measured from point indicated to ground using a 1000 Ohm per Volt meter, antenna and ground disconnected. Line voltage 117V. Consumption 75W. Power output 4.5W.

ALIGNMENT PROCEDURE

Operation	Connect Test Oscillator to—	Dummy Antenna	Set Test Osc. to	Band	Set Dial At	Adjust Trimmers	Purpose
1	1st Det. Grid	1/2 Mfd.	456	Br'dc't	600	ABCD	I. F. Alignment
2	Rec. Ant. Post	200 Mmfd.	1500	"	1500	F	Set Osc. to Scale
3	" " "	200 Mmfd.	1500	"	1500	GH	Algnt.of Ant.&De.
4	" " "	200 Mmfd.	600	"	600	J	Rock gang & adj. for max. output
5				"		FGH	Repeat 2 & 3
6	" " "	400 Ohms	18000	S.W.	18000	K	Set Osc. to Scale
7	" " "	400 Ohms	16500	S.W.	16500	L	Rock gang & adj. for max. output
8	" " "	400 Ohms	5500	Police	5500	N	Rock gang & adj. for max. output

LOCATION OF TRIMMERS

Chassis No. 5709AT

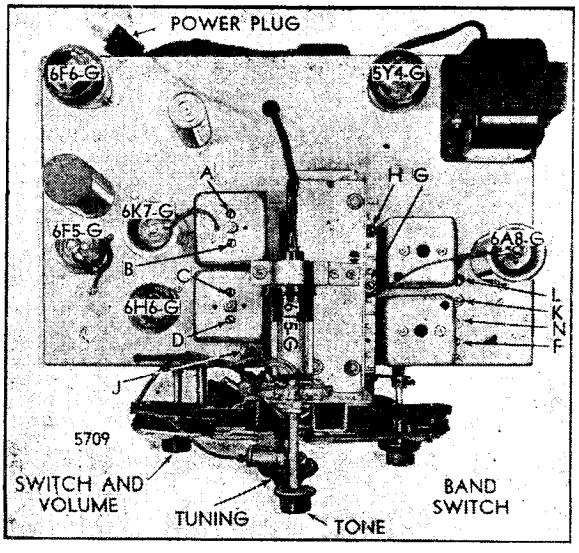

©John F. Rider, Publisher

ZENITH RADIO CORP.

MODELS 7S323, 7S342, 7S343
7S363, 7S366, 7S364
Chassis 5714
Schematic, Parts

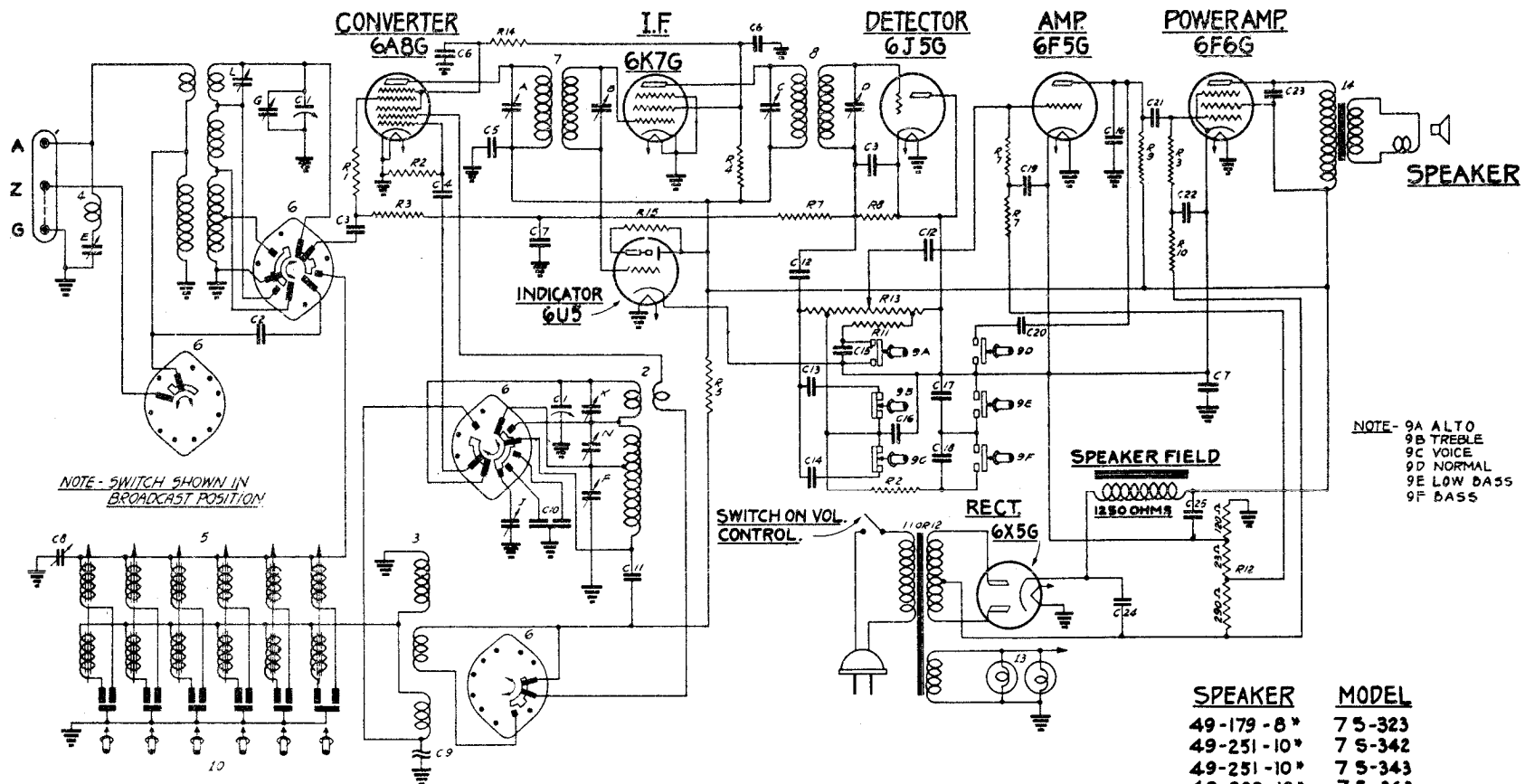

SPEAKER	MODEL
49-179-8"	7S-323
49-251-10"	7S-342
49-251-10"	7S-343
49-208-10"	7S-363
49-249-12"	7S-366
49-266-12"	7S-364

DIAG Nº	PART Nº	DESCRIPTION		DIAG Nº	PART Nº	DESCRIPTION		DIAG Nº	PART Nº	DESCRIPTION		DIAG Nº	PART Nº	DESCRIPTION
C-1	22-717	TWO GANG VAR COND.		C-17	22-435	02 MFD	600V	R-13	63-985	VOLUME CONTROL				
C-2	22-289	50 MMFD	600V	C-22	22-219	03 MFD	200V	R-14	63-663	18 M OHM	1/4 W			
C-3	22-162	.0001 MFD	600V	C-23	22-492	002 MFD	600V	R-15		1 MEGOHM MOUNTED IN		A		1ST. I.F. TRANS. PRI
C-4	22-127	25 MMFD	600V	C-24	22-718	12 MFD ELECTROLYTIC	450V			TUNING TUBE BASE		B		1ST. I.F. TRANS. SEC
C-5	22-170	.1 MFD	400V	C-25	22-719	16 MFD ELECTROLYTIC	350V	1				C		2ND I.F. TRANS. PRI
C-6	22-212	.05 MFD	400V						S-6294	ANTENNA COIL & SHIELD ASSEM		D		2ND I.F. TRANS. SEC
C-7	22-250	05 MFD	200V					2				E		WAVE TRAP
C-8	22-519	TRIMMER COND							S-6295	OSC COIL & SHIELD ASSEM.		F		BROADCAST OSC. (SEE NOTE)
C-9	22-740	COMPENSATING COND.		R-1	63-621	39 OHM	1/4 W	3	20-196	COMPENSATING COIL		G		ANTENNA BROADCAST (ON GANG)
C-10	22-708	DUAL FIXED PADDER		R-2	63-592	33 M OHM	1/4 W	4	70-154	WAVE TRAP		J	22-463	BROADCAST PADDER
C-11	22-358	.002 MFD	600V	R-3	63-597	470 M OHM	1/4 W	5				K		SHORT WAVE OSC (SEE NOTE)
C-12	22-327	.02 MFD	200V	R-4	63-961	47 M OHM	1 W	6	85-151	BAND SELECTOR SWITCH		L	22-305	SHORT WAVE DETECTOR
C-13	22-182	.00025 MFD	600V	R-5	63-680	10 M OHM	1 W	7	95-536	1ST. I.F. TRANSFORMER		N		POLICE BAND OSC (SEE NOTE)
C-14	22-470	.00015 MFD	600V					8	95-537	2ND I.F. TRANSFORMER				
C-15	22-185	.01 MFD	200V	R-7	63-271	1 MEGOHM	1/4 W	9	S-6224	TONE CONTROL SW. ASSEM.				
C-16	22-147	.0005 MFD	600V	R-8	63-655	220 M OHM	1/4 W	10	85-152	AUTOMATIC TUNING SWITCH				
C-17	22-458	.006 MFD	600V	R-9	63-296	220 M OHM	1/4 W	11	95-526	POWER TRANS-117V-50-60 ~				
C-18	22-326	.003 MFD	400V	R-10	63-595	100 M OHM	1/4 W	12	95-535	POWER TRANS. ALL VOLTAGE 25 ~				NOTE-TRIMMERS "F-K & N"
C-19	22-190	.1 MFD	200V	R-11	63-591	22 M OHM	1/4 W	13	100-36	PILOT LIGHT .25 A - 6.3V				MOUNTED ON BAKELITE
C-20	22-448	.004 MFD.	600V	R-12	63-984	3 SECTION CANDOHM		14		SPEAKER TRANS.				STRIP-PART Nº 22-324

FOR TUNER DATA, SEE
SPECIAL SECTION

I.F. FREQUENCY 455 K.C.
7 TUBE SUPERHETERODYNE
CHASSIS Nº 5714-A.C. 3-BAND
ZENITH RADIO CORPORATION
CHICAGO, ILL.

©John F. Rider, Publisher

MODELS 7S323,7S342,7S343
7S363,7S364,7S366
Chassis 5714
Voltage,Socket,Trimmers.
Alignment

ZENITH RADIO CORP.

NOTE

Voltages measured with a 1000 ohm per volt meter from chassis to socket contacts. Antenna disconnected — volume control on full.

Line voltage 115 V. Consumption 65 watts.

Power Output 4.5 watts.

(A) Bias for 6J5 — 6K7 and 6A8 measured across X of voltage divider is—2 volts.

(B) Bias for 6F5 measured across X and Y sections of voltage divider is—3.2 volts.

(C) Bias for 6F6 measured across XY and Z sections of voltage divider is—16 volts.

Models 7S323, 7S342, 7S343, 7S363, 7S364, 7S366
CHASSIS No. 5714

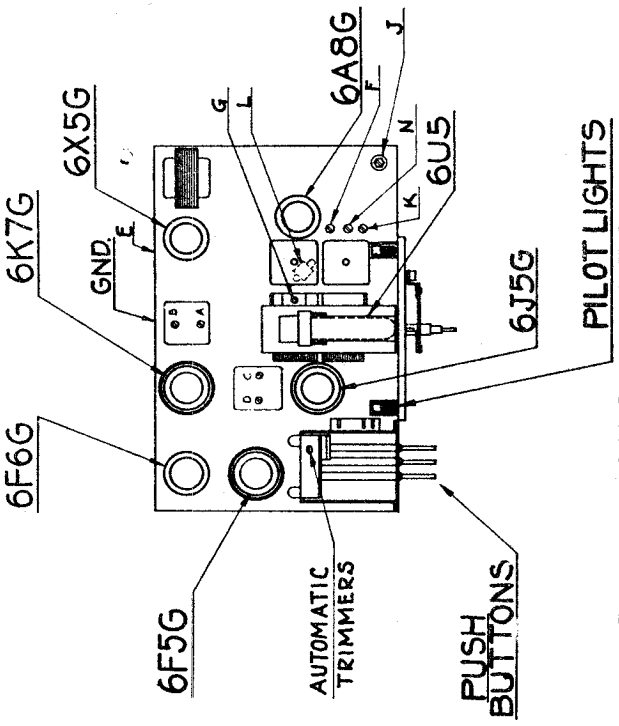

Location of Tubes and Trimmers

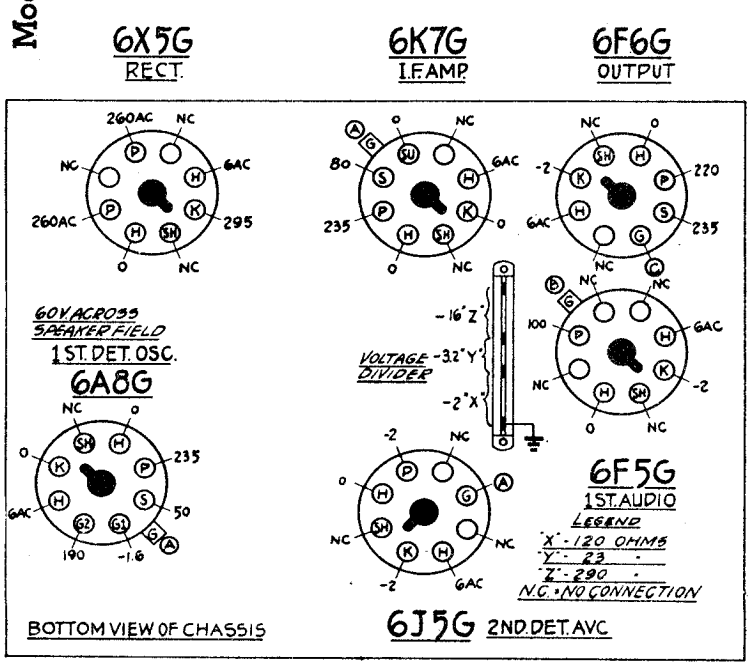

ALIGNMENT PROCEDURE

Operation	Connect Test Oscillator to	Dummy Antenna	Set Test Osc. to	Band	Set Dial At	Adjust Trimmers	Purpose
1	1st Det. Grid	1/2 Mfd.	455	Br'dc't	600	ABCD	I. F. Alignment
2	Rec. Ant. Post	200 Mmfd.	455	"	600	E	See Note
3	" " "	200 Mmfd.	1500	"	1500	F	Set Osc. to Scale
4	" " "	200 Mmfd.	1500	"	1500	G	Al'gment of Ant.
5	" " "	200 Mmfd.	600	"	600	J	Rock gang & adj. for max. output.
6	" " "	200 Mmfd.		"		FG	Repea 3 & 4
7	" " "	400 Ohms	18000	S.W.	18000	K	Set Osc. to Scale
8	" " "	400 Ohms	18000	S.W.	18000	L	Rock Gang & adj. for max. output.
9	" " "	400 Ohms	6000	Police	6000	N	Rock Gang & adj. for max. output.

NOTE: If receiver is used in location subject to code interference adjust wave trap (E) for minimum interference with antenna connected and receiver operating in broadcast band.

©John F. Rider, Publisher

ZENITH RADIO CORP.

MODELS 9S232AT, 9S244AT
9S262AT, 9S264AT, 9S204AT
Chassis 5905AT
Schematic, Parts

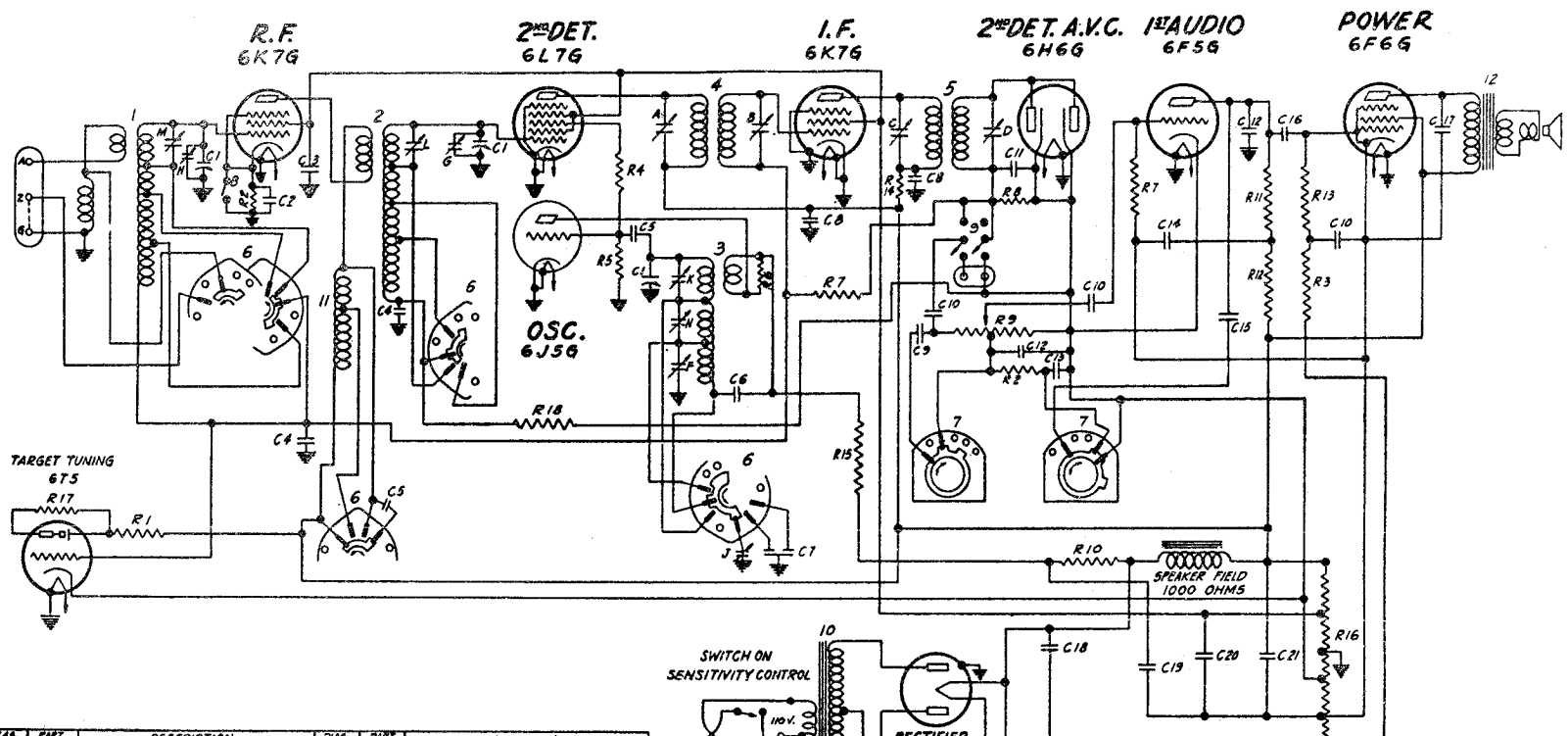

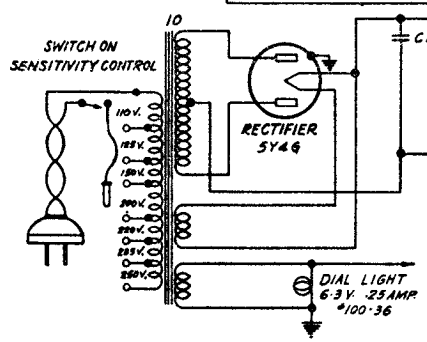

DIAG. No.	PART No.	DESCRIPTION	
C1	22-548	THREE GANG VARIABLE CONDENSER	
C2	22-250	05 MFD	200 V.
C3	22-170	.1 MFD.	400 V
C4	22-487	.05 MFD.	400 V
C5	22-127	25 MMFD.	600 V.
C6	22-358	002 MFD	600 V.
C7	22-558	DUAL FIXED PADDER	
C8	22-212	05 MFD.	400 V.
C9	22-182	.00025 MFD	600 V.
C10	22-327	.02 MFD.	200 V.
C11	22-162	.0001 MFD	600 V
C12	22-147	0005 MFD	600 V.
C13	22-326	003 MFD	400 V
C14	22-177	.2 MFD.	400 V.
C15	22-448	004 MFD.	600 V
C16	22-435	02 MFD.	600 V.
C17	22-627	.002 MFD	1000 V.
C18	22-633	8 MFD DRY ELECTROLYTIC	475 V
C19	22-637	4 MFD. " "	450 V.
C20		4 MFD. " "	350 V.
C21		16 MFD " "	450 V.
R1	63-609	22 M OHMS	½W.±20
R2	63-593	47 M OHMS	¼W.±20
R3	63-595	100 M OHMS	¼W.±20
R4	63-581	470 OHMS	¼W.±20
R5	63-645	27 M OHMS	¼W.±10
R6	63-586	3300 OHMS	¼W.±20
R7	63-271	1 MEGOHMS	¼W.±20
R8	63-658	390 M OHMS	¼W.±10
R9	63-931	2 MEGOHM VOLUME CONTROL	
R10	63-608	15 M OHMS	1W.±20
R11	63-296	220 M OHMS	¼W.±20
R12	63-654	180 M OHMS	¼W.±10
R13	63-597	470 M OHMS	¼W.±20
R14	63-605	1000 OHMS	½W.±20
R15	63-680	10 M OHMS	1W.±20
R16	63-937	5 SECTION CANDOHM	
R17		1 MEGOHM MOUNTED IN TUNING TUBE SOCKET	
R18	63-583	1000 OHM	¼W.±20

DIAG. No.	PART No.	DESCRIPTION
		VARIABLE TRIMMERS
A		1ST I F TRANSFORMER PRIMARY
B		1ST I F " SECONDARY
C		2ND I F " PRIMARY
D		2ND I F " SECONDARY
F		BROADCAST OSCILLATOR (SEE NOTE)
G		DETECTOR BROADCAST (ON GANG)
H		ANTENNA BROADCAST (ON GANG)
J	22-519	BROADCAST PADDER
K		SHORT WAVE OSCILLATOR (SEE NOTE)
L		SHORT WAVE DETECTOR (SEE NOTE)
M	22-418	SHORT WAVE ANTENNA
N		POLICE BAND OSCILLATOR (SEE NOTE)
		NOTE - TRIMMERS F, K, L, & N ARE MOUNTED ON BAKELITE STRIP PART #22-549
1	5-4910	ANTENNA COIL ASSEMBLY
	5-5496	" " AND SHIELD ASSEMBLY
2	5-4911	DETECTOR COIL ASSEMBLY
	5-5520	" " AND SHIELD ASSEMBLY
3	5-4912	OSCILLATOR COIL ASSEMBLY
	5-5528	" " AND SHIELD ASSEMB.
4	95-463	1ST I.F TRANSFORMER
5	95-464	2ND " "
6	85-103	BAND SELECTOR SWITCH
7	85-108	TONE CONTROL SWITCH
8	85-109	SENSITIVITY CONTROL SWITCH
9	85-111	PHONOGRAPH SWITCH
10	95-451	POWER TRANSFORMER-25~ ALL VOLTAGE
11	28-135	R.F CHOKE
12		SPEAKER TRANSFORMER

MODEL	SPEAKER
9S 232 AT	49-221 8"
9S 244 AT	49-222 10"
9S 262 AT	49-223 12"
9S 264 AT	49-223 12"
9S 204 AT	49-223 12"

I.F.-FREQUENCY 456 K.C.
9 TUBE SUPERHETERODYNE
3 BAND
CHASSIS No 5905 AT

ZENITH RADIO CORP.
CHICAGO, ILLINOIS

©John F. Rider, Publisher

MODELS 9S204AT, 9S232AT
9S262AT, 9S244AT, 9S264AT

ZENITH RADIO CORP.

Chassis 5905AT
Voltage, Socket
Trimmers, Alignment

SOCKET VOLTAGES

Tube	Position	1	2	3	4	5	6	7	8	9
6K7	R. F.	0	0	240	80	0	—	6.2	0	—2
6L7	Converter	0	6.2	240	80	—7	—	0	0	—1
6J5	Osc.	0	6.2	130	—	—8	—	0	0	—
6K7	I.F.	0	6.2	237	80	0	—	0	0	—1
6H6	2nd Det. A.V.C.	0	0	—2.5	—2	—2.5	—	6.2	—2	—
6F5	1st Audio	0	0	—	82	—	—	6.2	—2	—2.5
6F6	Power	0	0	225	240	—3.5	—	6.2	—4.5	—
5Y4	Rect.	0	—	AC	—	AC	—	298	298	—
		H	Ep	Eg	Et	Ek	H			
6T5	Target	0	10	—2	240	—2	6.2			

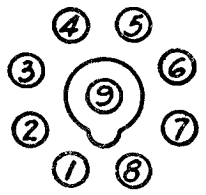

BOTTOM VIEW OF SOCKET

All voltages measured from point indicated to ground using a 1000 Ohm per Volt meter, antenna and ground disconnected. Line voltage 117V. Consumption 75W. Power output 4.5W.

ALIGNMENT PROCEDURE

Operation	Connect Test Oscillator to—	Dummy Antenna	Set Test Osc. to	Band	Set Dial At	Adjust Trimmers	Purpose
1	1st Det. Grid	1/2 Mfd.	456	Br'dc't	600	ABCD	I. F. Alignment
2	Rec. Ant. Post	200 Mmfd.	1500	"	1500	F	Set Osc. to Scale
3	" " "	200 Mmfd.	1500	"	1500	GH	Algnt.of Ant.&Det
4	" " "	200 Mmfd.	600	"		J	Rock gang & adj. for max. output
5				"		FGH	Repeat 2 & 3
6	Rec. Ant. Post	400 Ohms	18000	S.W.	18000	K	Set Osc. to Scale
7	" " "	400 Ohms	16500	S.W.	16500	LM	Rock gang & adj. for max. output
8	" " "	400 Ohms	5500	Police	5500	N	Rock gang & adj. for max. output

LOCATION OF TRIMMERS

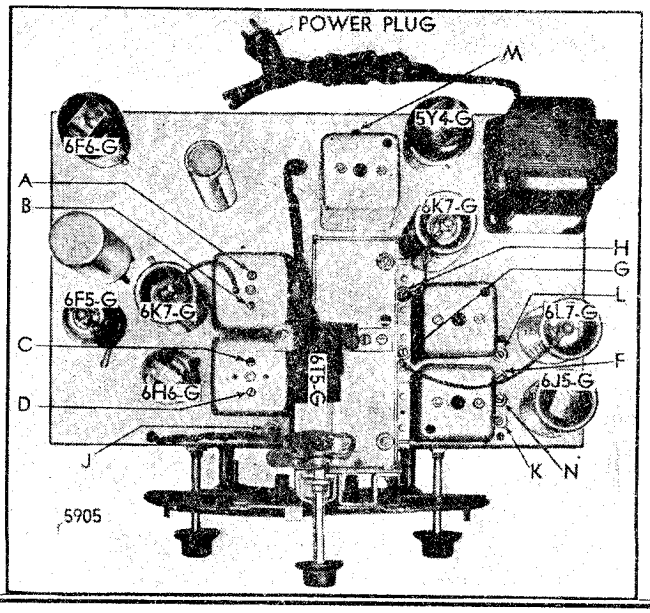

Chassis No. 5905AT

©John F. Rider, Publisher

ZENITH RADIO CORP.

MODELS 9S307, 9S324
9S344, 9S367, 9S369
Chassis 5907
Schematic, Parts

FOR TUNER DATA, SEE
SPECIAL SECTION

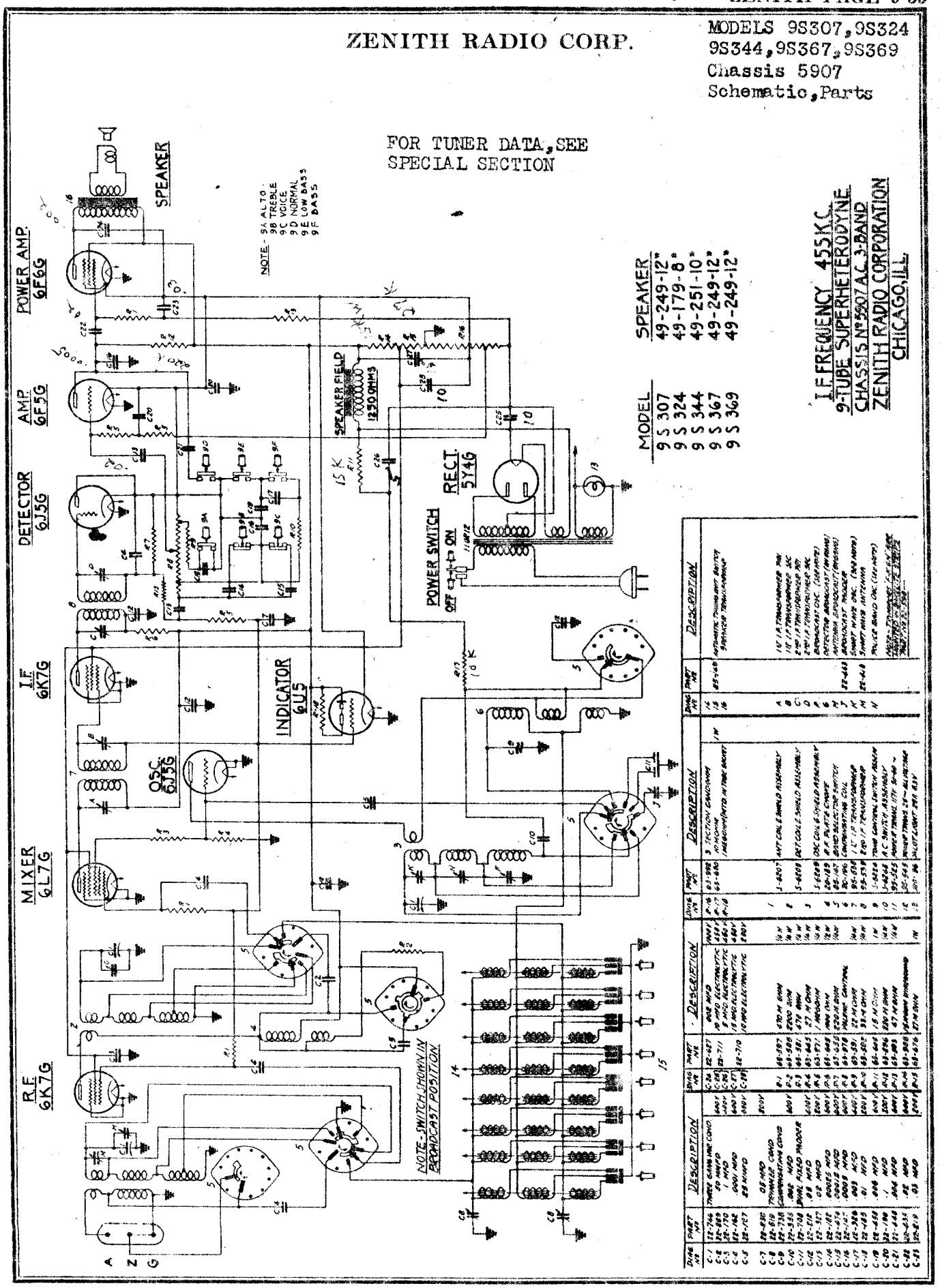

MODEL	SPEAKER
9S307	49-249-12"
9S324	49-179-8"
9S344	49-251-10"
9S367	49-249-12"
9S369	49-249-12"

I.F. FREQUENCY 455 K.C.
9-TUBE SUPERHETERODYNE
CHASSIS Nº 5907 AC 3-BAND
ZENITH RADIO CORPORATION
CHICAGO, ILL.

©John F. Rider, Publisher

MODELS 9S307,9S324,9S344
9S367,9S369.Chassis 5907
Voltage,Socket,Trimmers
Alignment

ZENITH RADIO CORP.

NOTE

Voltages measured with a 1000 ohm per volt meter from chassis to socket contacts. Antenna disconnected — volume control on full.

Line voltage 115 v. Consumption 75 watts

Power Output 4.5 watts.

(A) Bias for 6K7 R. F. and I.F. —6L7—6U5 and 6J5 second det. measured across X and is—1.6 volt.

(B) Bias for 6F5 measured across X and Y and is—3 volts.

(C) Bias for 6F6 measured across XY and Z and is—16 volts.

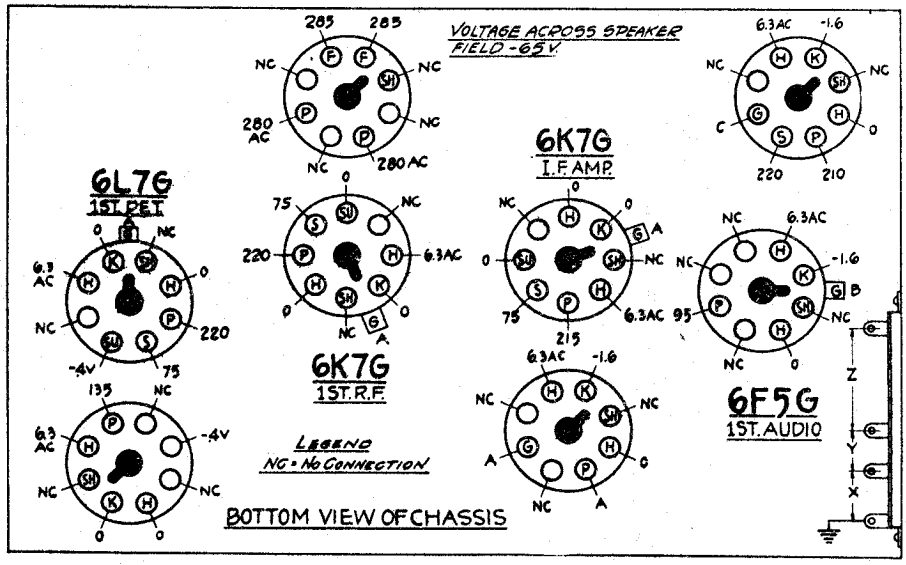

LEGEND

SH — Shield
H — Heater
P — Plate
S — Screen
G — Grid
SU — Suppressor
D — Diode
K — Cathode
NC — No Connection
F — Filament

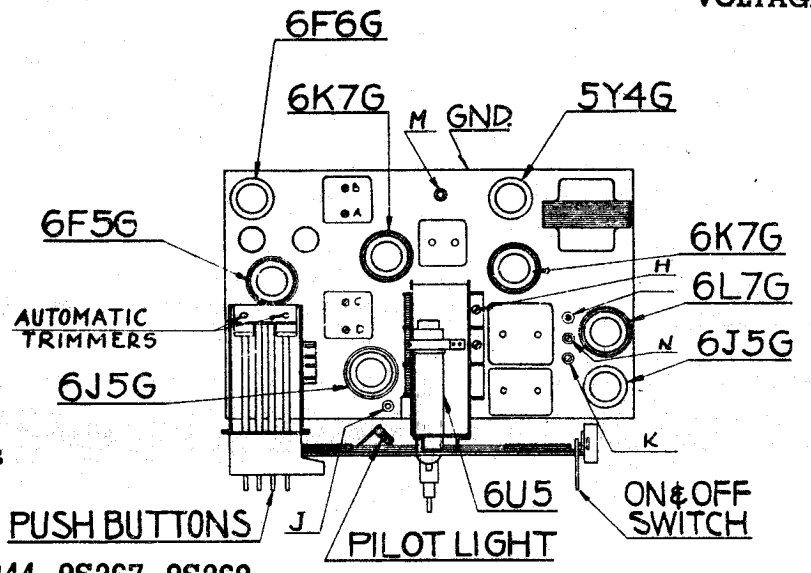

Location of Tubes and Trimmers

Models 9S307, 9S324, 9S344, 9S367, 9S369

ALIGNMENT PROCEDURE

Operation	Connect Test Oscillator to	Dummy Antenna	Set Test Osc. to	Band	Set Dial At	Adjust Trimmers	Purpose
1	1st Det. Grid	1/2 Mfd.	455	Br'dc't	600	ABCD	I. F. Alignment
2	Rec. Ant. Post	200 Mmfd.	1500	"	1500	F	Set Osc. to Scale
3	" " "	200 Mmfd.	1500	"	1500	GH	Al'gment of Ant. and Det.
4	" " "	200 Mmfd.	600	"	600	J	Rock gang & adj. for max. output
5	" " "	200 Mmfd.		"		FGH	Repeat 2 & 3
6	" " "	400 Ohms	18000	S.W.	18000	K	Set Osc. to scale
7	" " "	400 Ohms	18000	S.W.	18000	M	Rock gang & adj. for max. output
8	" " "	400 Ohms	6000	Police	6000	N	Rock gang & adj. for max. output

©John F. Rider, Publisher

MODEL 9S365
Chassis 5906
Schematic, Parts

ZENITH RADIO CORP.

FOR TUNER DATA, SEE SPECIAL SECTION

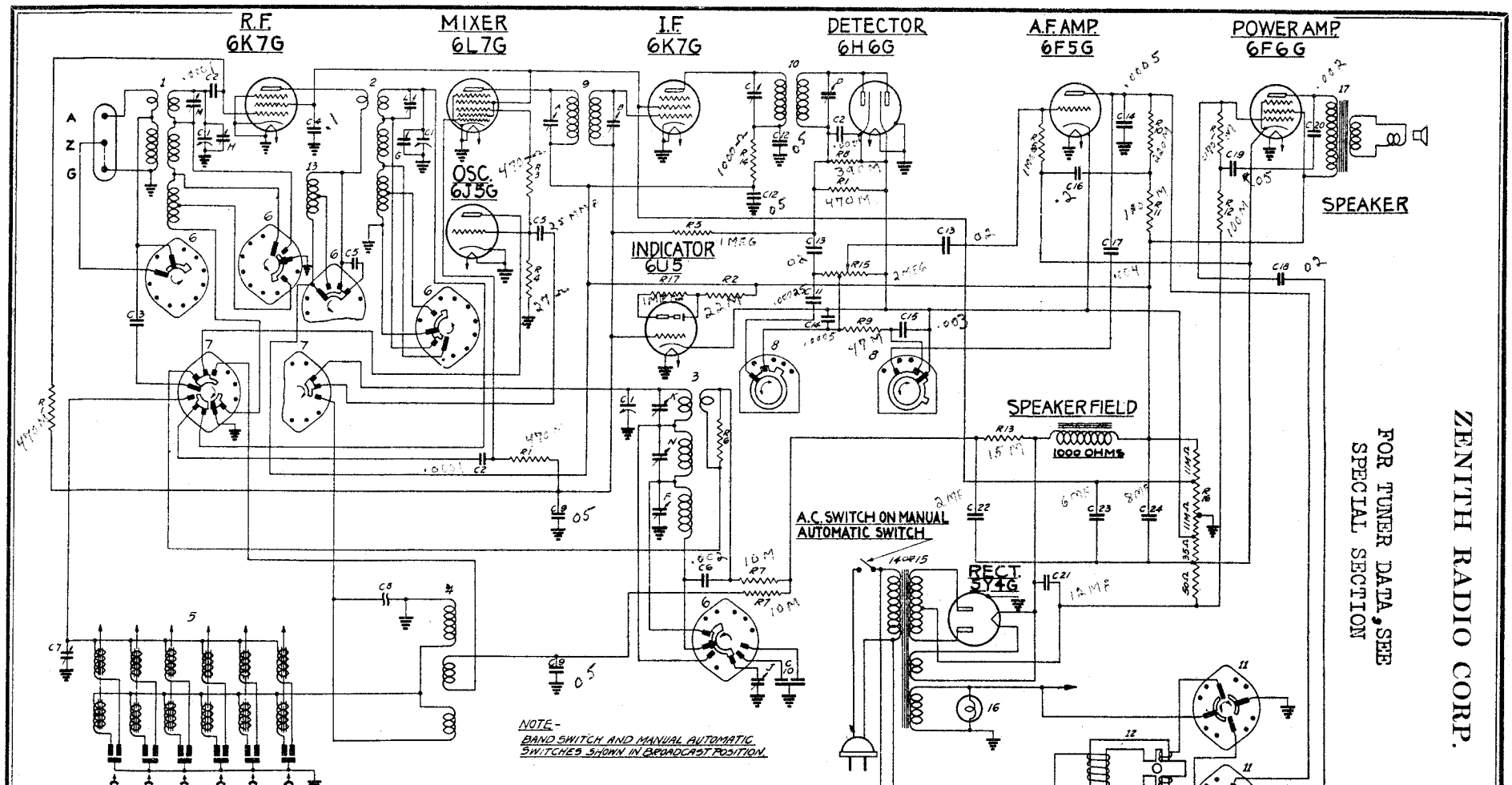

NOTE - BAND SWITCH AND MANUAL AUTOMATIC SWITCHES SHOWN IN BROADCAST POSITION.

DIAG Nº	PART Nº	DESCRIPTION		DIAG Nº	PART Nº	DESCRIPTION		DIAG Nº	PART Nº	DESCRIPTION		DIAG Nº	PART Nº	DESCRIPTION
C-1	22-548	THREE GANG VARIABLE COND.		C-21	22-569	12 MFD. ELECTROLYTIC	450V	R-14	63-605	1000 OHM	12W	11	85-116	MOTOR CONTROL SWITCH
C-2	22-162	.0001 MFD.	600V	C-22		2 MFD ELECTROLYTIC	450V	R-15	63-568	2 MEGOHM VOL. CONTROL		12	141-51	MOTOR
C-3	22-289	50 MMFD	600V	C-23	22-571	6 MFD ELECTROLYTIC	200V	R-16	63-570	CANDOHM RESISTOR		13	20-135	R.F. CHOKE
C-4	22-170	.1 MFD.	400V	C-24		8 MFD ELECTROLYTIC	450V	R-17		1 MEGOHM (IN TUNING TUBE SOCKET)		14	95-418	POWER TRANS. 117V-50-60~
C-5	22-127	25 MMFD.	600V									15	95-451	POWER TRANS. 25~ ALL VOLTAGE
C-6	22-358	.002 MFD.	600V									16	100-36	PILOT LIGHT
C-7	22-519	TRIMMER COND.												
C-8	22-699	COMPENSATING COND.		R-1	63-597	470 M OHM	1/4 W	1				A		1ST I.F. TRANS. PRI.
C-9	22-487	.05 MFD	400V	R-2	63-609	22 M OHM	1/2 W		S-5017	ANTENNA COIL & SHIELD ASSEM.		B		1ST I.F. TRANS. SEC.
C-10	22-558	DUAL FIXED PADDER		R-3	63-581	470 OHM	1/4 W	2				C		2ND I.F. TRANS. PRI.
C-11	22-182	.00025 MFD.	600V	R-4	63-645	27 M OHM	1/4 W		S-5018	DET. COIL & SHIELD ASSEMBLY		D		2ND I.F. TRANS. SEC.
C-12	22-212	.05 MFD.	400V	R-5	63-271	1 MEGOHM	1/4 W	3				F		BROADCAST OSC. (SEE NOTE)
C-13	22-327	.02 MFD.	200V	R-6	63-586	3300 OHM	1/4 W		S-5019	OSC. COIL & SHIELD ASSEM.		G		DET. BROADCAST (ON GANG)
C-14	22-147	.0005 MFD.	600V	R-7	63-680	10 M OHM	1 W	4	20-183	COMPENSATING COIL		H		ANT. BROADCAST (ON GANG)
C-15	22-326	.003 MFD.	400V	R-8	63-658	390 M OHM	1/4 W	5				J	22-519	BROADCAST PADDER
C-16	22-177	.2 MFD.	400V	R-9	63-593	47 M OHM	1/4 W	6	85-103	BAND SELECTOR SWITCH		K		SHORT WAVE OSC. (SEE NOTE)
C-17	22-448	.004 MFD.	600V	R-10	63-296	220 M OHM	1/4 W	7	85-141	MANUAL AUTOMATIC SWITCH		L		SHORT WAVE DET. (SEE NOTE)
C-18	22-435	.02 MFD.	600V	R-11	63-654	180 M OHM	1/4 W	8	85-108	TONE CONTROL SWITCH		M	22-418	SHORT WAVE ANTENNA
C-19	22-250	.05 MFD.	200V	R-12	63-595	100 M OHM	1/4 W	9	95-416	1ST I.F. TRANSFORMER		N		POLICE BAND OSC. (SEE NOTE)
C-20	22-627	.002 MFD.	1000V	R-13	63-608	15 M OHM	1 W	10	95-417	2ND I.F. TRANSFORMER				

NOTE - TRIMMERS 'F-K-L & N MOUNTED ON BAKELITE STRIP PART # 22-549 -

SPEAKER 49-148-12"

MODEL 9S-365

I.F. FREQUENCY 455 K.C.
9 TUBE SUPERHETERODYNE
CHASSIS Nº 5906 A.C. 3 BAND
ZENITH RADIO CORPORATION
CHICAGO, ILLINOIS

©John F. Rider, Publisher

Model 9S365
CHASSIS No. 5906

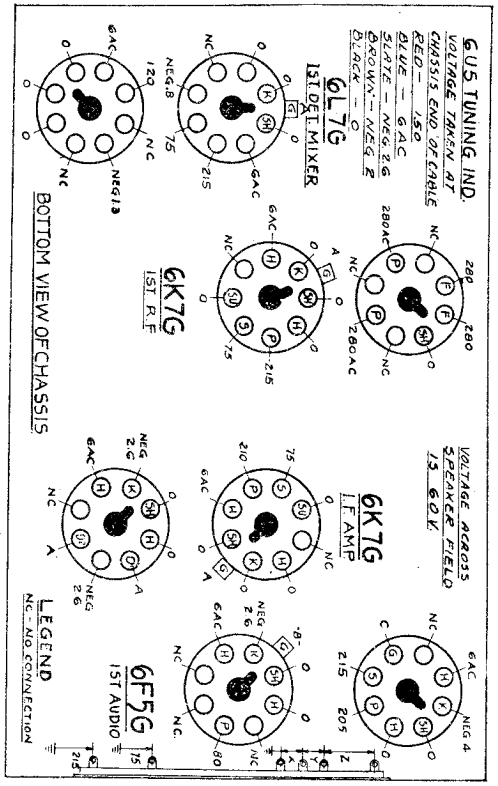

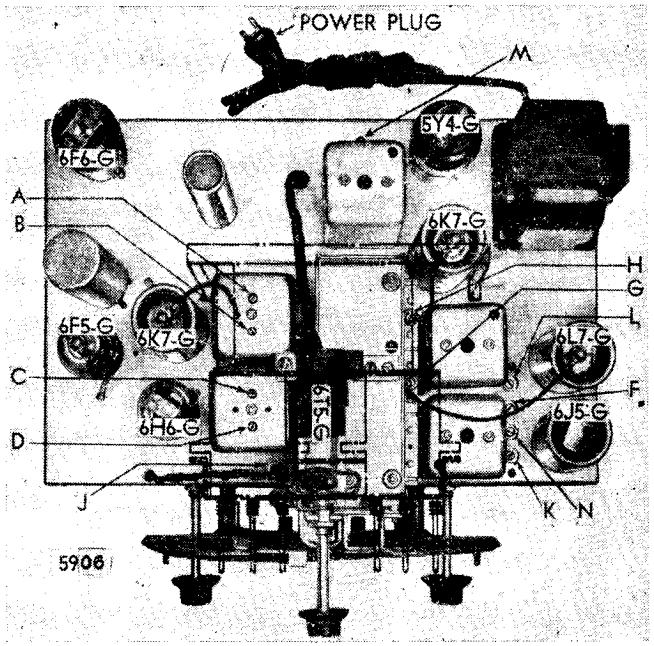

Location of Tubes and Trimmers

NOTE

Voltages measured with a 1000 ohm per volt meter from chassis to socket contacts. Antenna disconnected — volume control on full.

Line voltage 115 v. Consumption 75 watts.
Power Output 4.5 watts.

(A) Bias for 6A8 — 6K7 R.F. and I.F. and 6H6 measured at X is—2.6 volts.

(B) Bias for 6F5 measured at X and Y is—4 volts.

(C) Bias for 6F6 measured across XY and Z is—16 volts.

LEGEND
SH — Shield
H — Heater
P — Plate
S — Screen
G — Grid
SU — Suppressor
D — Diode
K — Cathode
NC — No Connection
F — Filament

ALIGNMENT PROCEDURE

Operation	Connect Test Oscillator to	Dummy Antenna	Set Test Osc. to	Band	Set Dial At	Adjust Trimmers	Purpose
1	1st Det. Grid	1/2 Mfd.	456	Br'dc't	600	ABCD	I. F. Alignment
2	Rec. Ant. Post	200 Mmfd.	1500	"	1500	F	Set Osc. to Scale
3	" " "	200 Mmfd.	1500	"	1500	GH	Al'gment of Ant. and Det.
4	" " "	200 Mmfd.	600	"		J	Rock gang & adj. for max. output
5				"		FGH	Repeat 2 & 3
6	Rec. Ant. Post	400 Ohms	18000	S.W.	18000	K	Set Osc. to Scale
7	" " "	400 Ohms	16500	S.W.	16500	LM	Rock gang & adj. for max. output
8	" " "	400 Ohms	5500	Police	5500	N	Rock gang & adj. for max. output

©John F. Rider, Publisher

ZENITH RADIO CORP.

MODELS 12S345, 12S370
12S371. Chassis 1206
Schematic, Parts

FOR TUNER DATA, SEE
SPECIAL SECTION

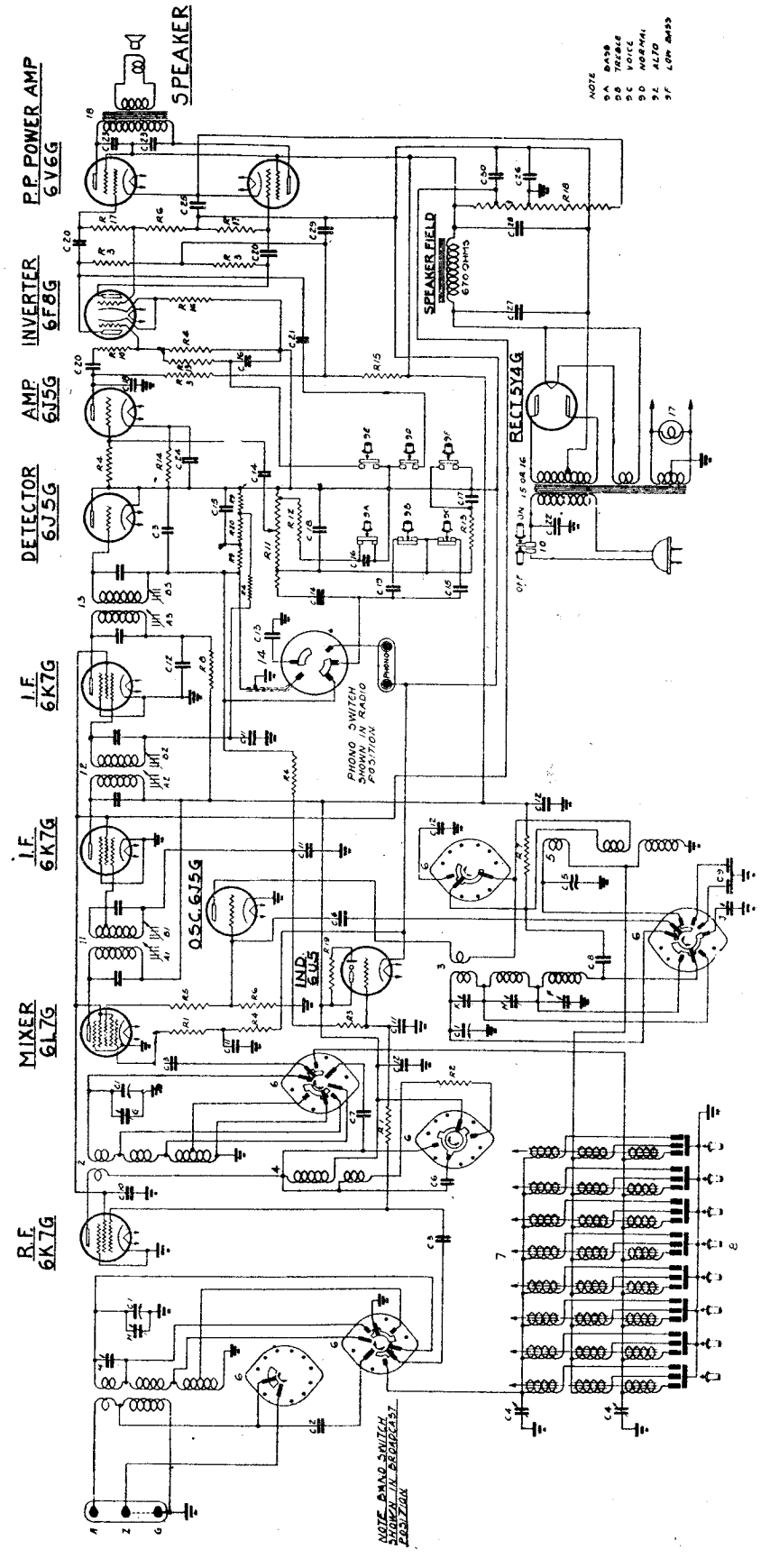

MODEL	SPEAKER
12S-345	49-255 - 12"
12S-370	49-188 - 12"
12S-371	49-185 - 12"

I.F. FREQUENCY 455 K.C.
12 TUBE SUPERHETERODYNE
CHASSIS Nº 1206 A.C. 3 BAND
ZENITH RADIO CORPORATION
CHICAGO, ILL.

DIAG. NO.	PART NO.	DESCRIPTION
C1	23-341	THREE GANG VAR. COND.
C2	22-289	50 MMFD
C3	22-163	.0001 MFD
C4	22-303	TRIMMER COND.
C5	22-141	COMPENSATING COND.
C6	22-221	25 MMFD
C7	22-165	.01 MMFD
C8	22-356	.002 MFD
C9	21-100	DUAL FIXED PADDER
C10	21-170	.1 MFD
C11	22-236	.03 MFD
C12	22-215	.05 MFD
C13	22-196	.1 MFD
C14	22-367	.02 MFD
C15	22-201	.00025 MFD
C16	22-165	.01 MFD
C17	22-445	.004 MFD
C18	21-441	.0005 MFD
C19	22-470	.0005 MFD
C20	21-171	.05 MFD
C21	22-141	20 MFD ELECTROLYTIC
C22	22-141	20 MFD ELECTROLYTIC
C23	22-222	.002 MFD
C24	22-141	20 MFD ELECTROLYTIC
C25	22-141	20 MFD ELECTROLYTIC
C26	22-141	20 MFD ELECTROLYTIC
C27	22-214	.02 MFD ELECTROLYTIC
C28	22-141	20 MFD ELECTROLYTIC
C29	22-141	20 MFD ELECTROLYTIC
C30	22-220	.1 MFD
R1	63-597	470 M OHM
R2	63-585	2200 OHM
R3	63-595	100 M OHM
R4	63-621	1 MEGOHM
R5	63-581	470 OHM

DIAG. NO.	PART NO.	DESCRIPTION
R6	63-625	47 M OHM
R7	63-609	1 M OHM
R8	63-605	470 M OHM
R9	63-589	1000 OHM
R10	63-593	22 M OHM
R11	63-597	470 M OHM
R12	63-585	2200 OHM
R13	63-609	1 M OHM
R14	63-625	2200 OHM
R15	63-597	470 M OHM
R16	63-589	1000 OHM
R17	63-657	330 M OHM
R18	63-581	470 OHM
R19	63-621	1 MEGOHM MOUNTED ON TUNING SOCKET
R20	63-651	1 MEGOHM

DIAG. NO.	PART NO.	DESCRIPTION
1	53-522	ANT. COIL AND SHIELD ASSM.
2	53-523	OUT COIL & SHIELD ASSM.
3	53-539	OSC. COIL & SHIELD ASSM.
4	20-109	R.F. PLATE CHOKE
5	20-136	CONDENSATING COIL
6	66-147	BAND SELECTOR SWITCH
7		
8	85-149	AUTOMATIC TUNING SW.
9	54-214	TONE CONTROL SWITCH
10	54-133	A.C. SWITCH ASSEMBLY
11	54-174	1ST I.F. TRANS. ASSEM.
12	54-175	2ND I.F. TRANS. ASSEM.
13	54-176	3RD I.F. TRANS. ASSEM.
14	89-130	PHONO SWITCH
15	95-201	POWER TRANS. (115-60 CY.)
16	95-202	POWER TRANS. (115-25 CY.)

DIAG. NO.	PART NO.	DESCRIPTION
L1	80-136	PILOT LIGHT ASSM.
		SPEAKER TRANS.
		1ST I.F. TRANS. PRI.
		1ST I.F. TRANS. SEC.
		2ND I.F. TRANS. SEC.
		2ND I.F. TRANS. PRI.
		3RD I.F. TRANS. PRI.
		3RD I.F. TRANS. SEC.
		OSCILLATOR OSC. COIL (NOTE)
		DETECTOR DIODE (IN GANG)
		ANT. RESIST. (IN GANG)
	23-143	BROADCAST OSC. PADDER
		SHORT WAVE OSC. (SEE NOTE)
	95-650	SHORT WAVE ANTENNA
		POLICE BAND OSC. (SEE NOTE)
		NOTE: TRIMMERS C1, C4
		IN ANT. MODULE ON
		BROADCAST SECTION.

©John F. Rider, Publisher

MODELS 12S345,12S370
12S371.Chassis 1206
Voltage,Socket
Trimmers,Alignment

ZENITH RADIO CORP.

Voltages measured with a 1000 ohm per volt meter from chassis to socket contacts. Antenna disconnected — volume control on full.

Line voltage 115 volts. Consumption 110 watts.

Power Output 15 watts.

(A) Bias for 6J5 first audio is measured across R14 and is +2.3 volts.

(B) Bias for 6V6 tubes measured across Y is +10 volts.

(C) Bias for 6K7 R.F. and I.F. and 6L7 measured across X is —2.6 volts.

(D) Bias for 6F8 grids shown at cathodes of 6F8 sockets.

LEGEND

SH — Shield
H — Heater
P — Plate
S — Screen
G — Grid
SU — Suppressor
D — Diode
K — Cathode
NC — No Connection
F — Filament

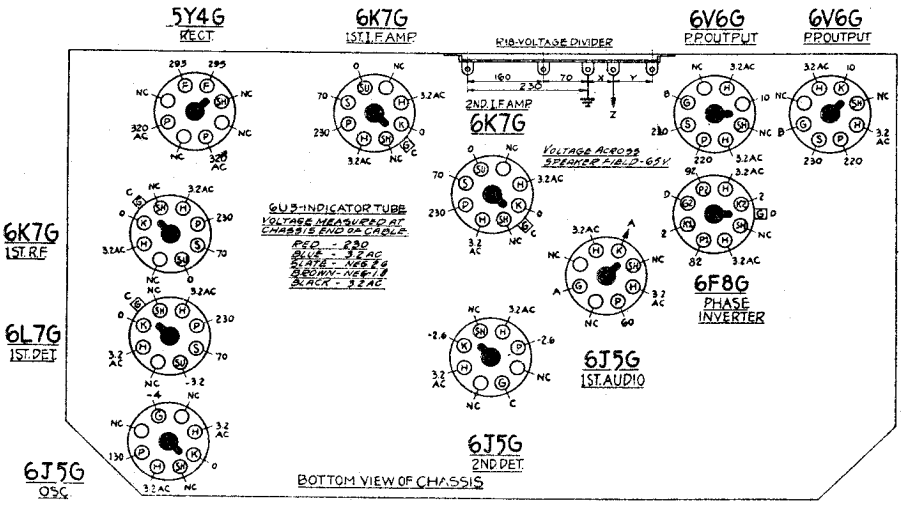

SOCKET VOLTAGES

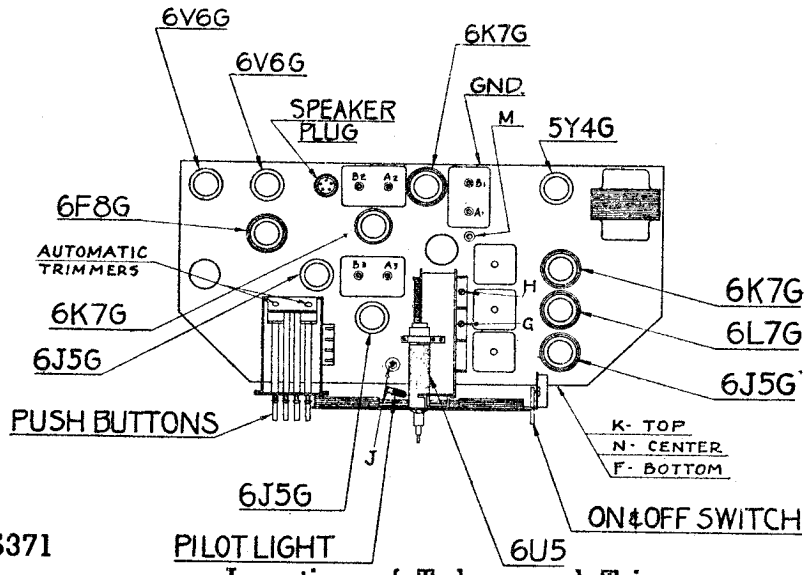

Location of Tubes and Trimmers

Models 12S345, 12S370, 12S371

CHASSIS No. 1206

ALIGNMENT PROCEDURE

Operation	Connect Test Oscillator to	Dummy Antenna	Set Test Osc. to	Band	Set Dial At	Adjust Trimmers	Purpose
1	1st Det. Grid	1/2 Mfd.	455	Br'dc't	600	ABABAB 112233	I. F. Alignment
2	Rec. Ant. Post	200 Mmfd.	1500	"	1500	F	Set Osc. to Scale
3	" " "	200 Mmfd.	1500	"	1500	GH	Al'gment of Ant. and Det.
4	" " "	200 Mmfd.	600	"	600	J	Rock gang & adj. for max. output
5	" " "			"		FGH	Repeat 2 & 3
6	" " "	400 Ohms	18000	S.W.	18000	K	Set. Osc. to Scale
7	" " "	400 Ohms	18000	S.W.	18000	M	Rock Gang & adj. for max. output
8	" " "	400 Ohms	6000	Police	6000	N	Rock gang & adj. for max. output

©John F. Rider, Publisher

ZENITH RADIO CORP.

MODELS 15S308, 15S346
15S372, 15S373
Chassis 1502
Schematic, Parts

I.F. FREQUENCY 455 K.C.
15 TUBE SUPERHETERODYNE
CHASSIS Nº 1502 A.C. 3 BAND
ZENITH RADIO CORPORATION
CHICAGO, ILLINOIS.

MODEL	SPEAKER
15S 308	49-186-12
15S 346	49-294-12
15S 372	49-186-12
15S 373	49-186-12

NOTE: TECHNICAL DATA ON MOUNTING OF PHILCO 38 CART Nº 32-731

NOTE
9A BASS
9B TREBLE
9C VOICE
9D NORMAL
9E ALTO
9F LOW BASS

SPEAKER
P.P. PARALLEL POWER AMP. 6V6G
INVERTER 6F8G
AMP 6J5G
DETECTOR 6J5G
I.F. 6K7G
I.F. 6K7G
MIXER 6L7G
R.F. 6K7G
OSC. 6J5G
IND. 6U5
RECT. 5Y4G (2)
SPEAKER FIELD 2.9 OHMS
PHONO SW. SHOWN IN RADIO POSITION
NOTE: BAND SWITCH SHOWN IN BROADCAST POSITION

FOR TUNER DATA, SEE SPECIAL SECTION

DWG NO	PART NO	DESCRIPTION
C-1	22-344	THREE GANG VARIABLE
C-2	22-289	58 MMFD
C-3	22-310	TRIMMER COND.
C-4	21-143	COMPENSATING COND
C-5	21-42	.0001 MFD
C-6	21-70	.1 MFD
C-7	22-259	10 MMFD
C-8	20-147	25 MMFD
C-9	22-235	.25 MFD
C-10	23-36	.002 MFD
C-11	22-215	.05 MFD
C-12	22-702	DUAL TUNG PADDER
C-13	21-182	.0015 MFD
C-14	21-183	.02 MFD
C-15	22-327	.0035 MFD
C-16	22-410	.0005 MFD
C-17	22-147	.0018 MFD
C-18	22-446	.004 MFD
C-19	22-306	.1 MFD
C-20	22-711	.25 MFD
C-21	21-196	.01 MFD

DWG NO	PART NO	DESCRIPTION	
C-1	22-344	THREE GANG VARIABLE	600V
C-2	22-289	58 MMFD	600V
C-3	22-310	TRIMMER COND.	
C-4	21-143	COMPENSATING COND	
C-5	21-42	.0001 MFD	600V
C-6	21-70	.1 MFD	400V
C-7	22-259	10 MMFD	600V
C-8	20-147	25 MMFD	600V
C-9	22-235	.25 MFD	200V
C-10	23-36	.002 MFD	600V
C-11	22-215	.05 MFD	400V
C-12	22-702	DUAL TUNG PADDER	
C-13	21-182	.0015 MFD	600V
C-14	21-183	.02 MFD	200V
C-15	22-327	.0035 MFD	600V
C-16	22-410	.0005 MFD	600V
C-17	22-147	.0018 MFD	600V
C-18	22-446	.004 MFD	600V
C-19	22-306	.1 MFD	200V
C-20	22-711	.25 MFD	400V
C-21	21-196	.01 MFD	400V

DWG NO	PART NO	DESCRIPTION	
C-22	22-325	.05 MFD	400V
C-23	22-743	.02 MFD ELECTROLYTIC	400V
C-24	22-743	.02 MFD ELECTROLYTIC	150V
C-25	22-743	.02 MFD ELECTROLYTIC	150V
C-26	22-744	.02 MFD ELECTROLYTIC	150V
C-27	22-744	.02 MFD ELECTROLYTIC	150V
C-28	22-744	.02 MFD ELECTROLYTIC	150V
C-29	22-744	.02 MFD ELECTROLYTIC	150V
C-30	22-744	.02 MFD ELECTROLYTIC	150V
C-31	22-744	.02 MFD ELECTROLYTIC	150V
C-32	22-744	.02 MFD ELECTROLYTIC	150V
C-33	22-635	.01 MFD	1000V
R-1	63-557	470 M OHM	½W
R-2	63-558	2200 OHM	½W
R-3	63-380	470 OHM	½W
R-4	63-668	47 M OHM	½W
R-5	63-595	100 M OHM	½W
R-6	63-511	1 MEGOHM	½W

DWG NO	PART NO	DESCRIPTION	
R-7	63-626	15 M OHM	1W
R-8	63-629	56 M OHM	½W
R-9	63-635	220 M OHM	½W
R-10	63-380	VOLUME CONTROL	
R-11	63-591	22 M OHM	½W
R-12	63-593	47 M OHM	½W
R-13	63-582	2200 OHM	½W
R-14	63-600	10 M OHM	½W
R-15	63-639	2200 OHM	½W
R-16	63-637	330 M OHM	½W
R-17	63-606	1500 OHM	½W
R-18	63-577	100 OHM	½W
R-19	63-608	22 OHM	½W
R-20	63-596	4 SECTION CANDOHM	
R-21		1 MEGOHM MINITED IN TUNING TUBE BASE	½W
R-22	63-691	1MOHM	½W
R-23	63-680	CANDOHM	½W

DWG NO	PART NO	DESCRIPTION	
1	32-535	POWER TRANSFORMER	
19	32-550	PILOT LIGHT 2½ - 6V	
20	10-36	SPEAKER FIELD	
21			
1	34-537	ANT. OSC. & SHIELD ASSEM.	
2	34-538	DET. OSC. & SHIELD ASSEM.	
3	34-539	OSC. OSC. & SHIELD ASSEM.	
4	20-189	R.F. CHOKE COIL	
5	20-196	CONDENSING COIL	
6	25-187	BAND SELECTOR SW.	
7			
8	23-149	AUTOMATIC TUNING SW.	
9	34-624	TONE CONTROL IN ASSM.	
10	25-188	PHONO SWITCH	
11	34-617	1ST I.F. TRANSFORMER	
12	34-615	2ND I.F. TRANSFORMER	
13	34-616	3RD I.F. TRANSFORMER	
14	34-547	A.C. SWITCH ASSEM.	
15	27-150	VOLUME CONTROL SWITCH	
16	32-661	POWER CHOKE	

DWG NO	PART NO	DESCRIPTION
17	32-535	POWER TRANSFORMER
19	32-550	PILOT LIGHT 2½ - 6V
20	10-36	SPEAKER FIELD
21		
A1		1ST I.F. TRANS. PRI.
A2		1ST I.F. TRANS. SEC.
A3		2ND I.F. TRANS. PRI.
A4		2ND I.F. TRANS. SEC.
A5		3RD I.F. TRANS. PRI.
A6		3RD I.F. TRANS. SEC.
F		AUTOMATIC PHONO SW.
G		DET. & AUDIO SEC. (SEE NOTES)
H		ANT. (ON BAND)
H	32-463	BROADCAST PADDER
J		SHORT WAVE ANTENNA
K	32-824	SHORT WAVE ANTENNA
M		PHILCO BAND SELECTOR WIRE
N		

©John F. Rider, Publisher

MODELS 15S308,15S346
15S372,15S373
Chassis 1502
Voltage,Socket
Trimmers,Alignment

ZENITH RADIO CORP.

LEGEND

SH — Shield
H — Heater
P — Plate
S — Screen
G — Grid
SU — Suppressor
D — Diode
K — Cathode
NC — No Connection
F — Filament
NR — No reading

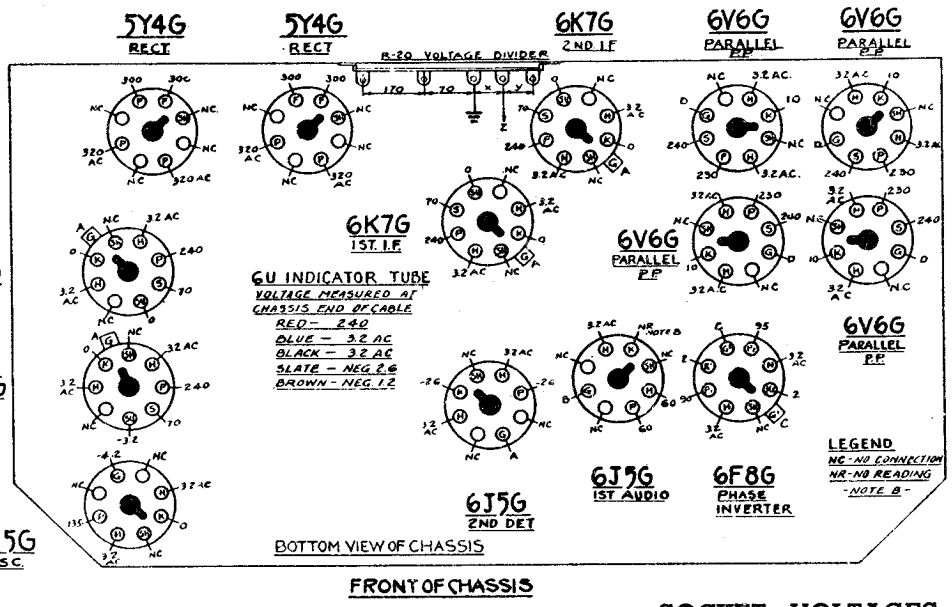

NOTE

Voltages measured with a 1000 ohm per volt meter from chassis to socket contacts. Antenna disconnected — volume control on full.

Line voltage 115 volts. Consumption 160 watts.

Power Output 30 watts.

(A) Bias for 6K7 R.F. and I.F. — 6L7 — 6V5 triode and 6J5 second detector is measured across X and is—2.6 volts.

(B) Bias for 6J5 first audio is measured between points K of 6J5 socket and Z and is 2.4 volts.

(C) Bias for 6F8 measured at K^1 and K^2 and is 2 volts.

(D) Bias for the four 6V6 measured across X and Y and is 10 volts.

SOCKET VOLTAGES

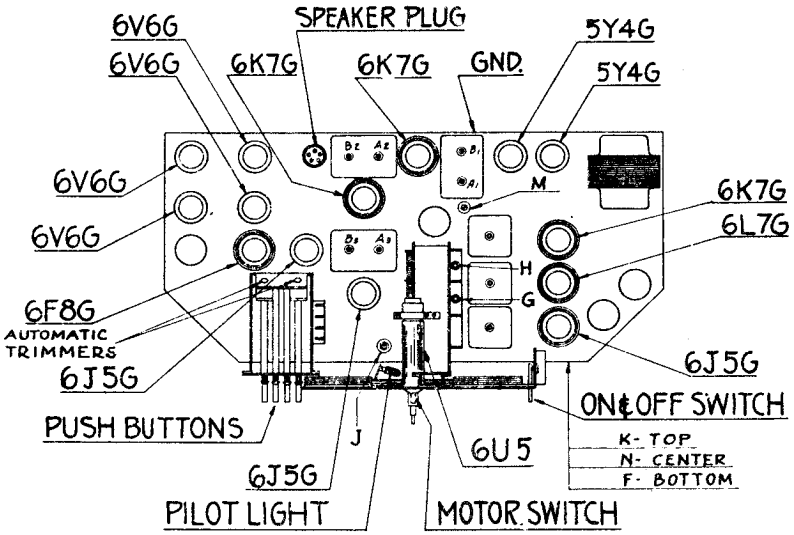

Models 15S308, 15S346, 15S372, 15S373
CHASSIS No. 1502

ALIGNMENT PROCEDURE

Operation	Connect Test Oscillator to	Dummy Antenna	Set Test Osc. to	Band	Set Dial At	Adjust Trimmers	Purpose
1	1st Det. Grid	1/2 Mfd.	455	Br'dc't	600	ABABAB 112233	I. F. Alignment
2	Rec. Ant. Post	200 Mmfd.	1500	"	1500	F	Set Osc. to Scale
3	" " "	200 Mmfd.	1500	"	1500	GH	Al'gment of Ant. and Det.
4	" " "	200 Mmfd.	600	"	600	J	Rock gang & adj. for max. output
5	" " "			"		FGH	Repeat 2 & 3
6	" " "	400 Ohms	18000	S.W.	18000	K	Set Osc. to Scale
7	" " "	400 Ohms	18000	S.W.	18000	M	Rock Gang & adj. for max. output
8	" " "	400 Ohms	6000	Police	6000	N	Rock gang & adj. for max. output

©John F. Rider, Publisher

ZENITH RADIO CORP.

AUTOMATIC TUNER
Schematic, Notes

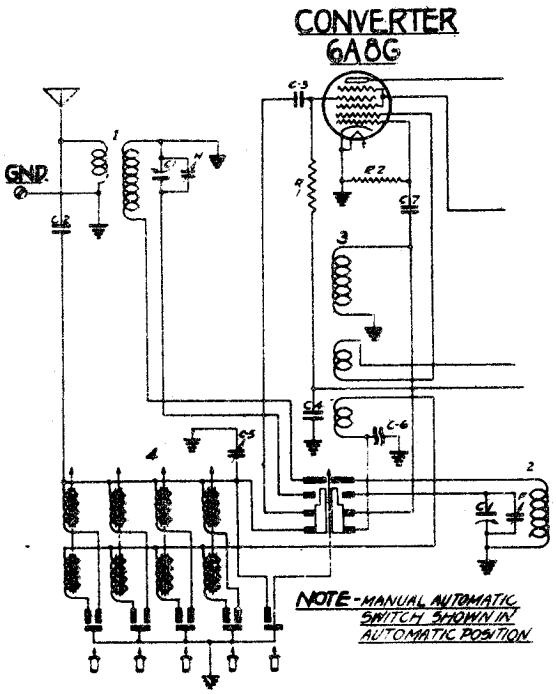

ZENITH
AUTOMATIC TUNING SYSTEM

The Zenith automatic tuning system is designed so as to be very simple in adjustment, and to remain in adjustment regardless of changes in humidity, temperature or vibration. This system makes use of the fact that the inductance of a winding varies directly with any change in the permeability of the core material of the coil. A switch is incorporated in each receiver which allows the normal tuned circuits, consisting of a coil and variable condenser in the oscillator, first detector, and, in some cases, the R.F. section of the receiver to be disconnected and replaced by very small fixed windings which may be tuned over a considerable range of frequency by means of a change in the core material.

Specially prepared iron slugs which have very low losses at radio frequency are so arranged that they may be mechanically moved in and out of the field of the afore mentioned coils. The permeability of these iron slugs is naturally much higher than that of air, and as they are moved in or out of the field of the coil, the inductance and natural period of the coil varies accordingly. It is quite easy to arrange such coils and iron slugs so that they may be tuned in tandem, that is, two or more iron slugs moved simultaneously into corresponding coils. This allows the receiver to be designed having only one tuning adjustment for each bank of coils and corresponding button.

As you will see on the circuit above, one button can be pressed to disconnect all automatic coils, and allows the normal tuning system of a coil and variable condenser to operate. On those receivers having short wave band, this switch is a part of the band switch. When the band switch is turned to the automatic position, or, in the smaller receivers, when one of the automatic buttons is pushed, this tuned circuit is disconnected, and the automatic coils are in circuit. The range of each set of coils will vary from 300 k.c. to 600 k.c., depending over which portion of the broadcast band they are designed to operate, and after being adjusted for a certain station within their range will come into operation whenever the corresponding button is pushed in.

The antenna is coupled to the input of the 1st detector by means of a 50 mmfd. condenser (C2) and an antenna compensating condenser (C5) is used to compensate for variations in antenna capacity. This condenser is preset at the factory, and under most conditions it will not be necessary to change it. However, where there is a seeming lack of sensitivity when tuning automatically, the condenser may very easily be reset by setting one of the automatic buttons at approximately the center of the broadcast band, tuning the button to a point where no station is heard, and readjusting the antenna compensating condenser to a point where the background noise is loudest. The button may then be re-set for whatever station is desired. This setting of the antenna condenser will be effective over the entire broadcast band and for all buttons.

In the oscillator circuit, it is necessary to alter the tuning curve so as to provide for tracking between the oscillator and first detector circuits. In the normal tuned circuit, this may be easily accomplished by means of a trimmer and padding condenser working in conjunction with the oscillator section of the variable condenser. However, as no variable condenser is used with the iron core coils, a different method must be resorted to. A small winding connected in series with the grid end of the automatic windings, and so placed as not to be affected by the iron core will, if properly designed, alter the shape of the tuning curve at the high frequency portion of the coil's range. Also, when two inductances are connected in parallel, the maximum inductance is limited by the size of the smaller of the two inductances. The upper portion of coil No. 3 in the above drawing is the padder winding, and also serves as a means of coupling to the oscillator plate circuit, and when used in conjunction with the smaller winding mentioned above alters the shape of the tuning curve so as to allow excellent tracking.

Variations in humidity and temperature are compensated for by means of condenser C6 which consists of a small fixed condenser composed of silver surfaces sprayed on a special ceramic tube which changes its capacity in the opposite way from any changes in the coil, and will compensate for the same.

This automatic system is remarkably simple and trouble free, and once set up for a customer should not require any further attention until it is desired to reset for other stations which can be easily accomplished by the customer himself.

©John F. Rider, Publisher

AUTOMATIC TUNER
Push Button Ranges
Aligrment Data
Service Hints

ZENITH RADIO CORP.

AUTOMATIC RANGES

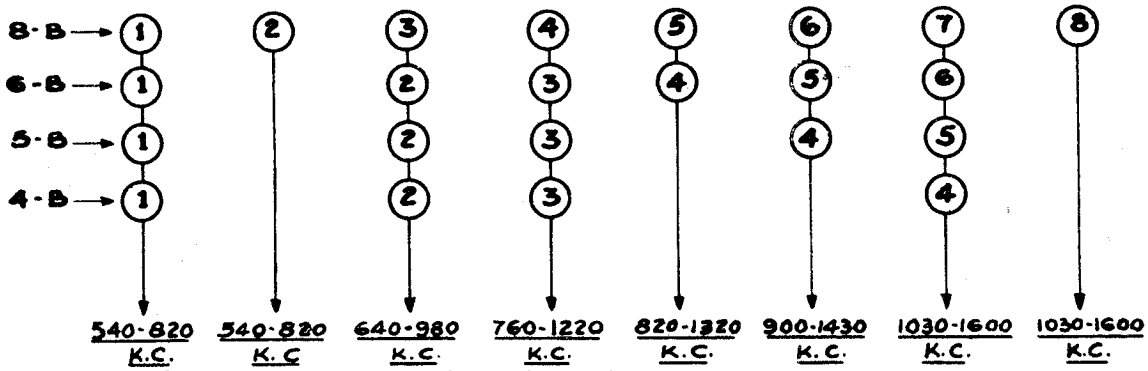

NOTE—Buttons numbered from left to right, or top to bottom as they appear on receivers, except on model 6B321 (Chassis 5653) and Models 6S322 and 6S357 (Chassis 5654) which are reversed.

ALIGNMENT INSTRUCTIONS

The proper procedure for the correct alignment of each chassis is outlined on the page opposite each circuit diagram.

The operations are outlined in consecutive order, and the instructions are under the following headings —

OSC. CONNECTED TO — tells where the output of the service oscillator is to be connected.

DUMMY — gives the proper capacity or resistance which should be connected in series with the service oscillator output.

TEST OSC. — Set test oscillator to frequency shown.

BAND — Set the receiver band switch to the position shown.

DIAL — The receiver should be set at the frequency shown.

TRIMMER — This column tells which trimmer (or trimmers) are to be adjusted for each operation. The chassis drawing has each trimmer indicated by a letter corresponding to the instructions.

PURPOSE—This column tells what is being accomplished by each operation.

If these instructions are carefully followed each chassis will be easily and correctly realigned.

SERVICE HINTS

Chassis	Complaint	Cause and Remedy
5907 & 1206 only	Distortion	Very much like blocking AVC action. Can usually be traced to open filter section.
1502 only	Won't log	Can be traced to loose PK screw in gang hub gear.
5714 only	Noisy automatic or automatic dead	Dirt on contacts or warped strip. Shorted at switch to ground or shorted compensating condenser.
	Automatic dead 1 or more positions Automatic weak	Open coils — usually broken leads or poor contact at switch. Open leads to R. F. section of automatic or leaky or open compensating condenser. Padder loose — out of adjustment or all plates not soldered.
	Eye flutters	Open filter.
	Eye overlaps on strong signal	Open AVC resistors
	No eye action	Shorted condenser (C7.)
	Chirps on medium to loud signal	Leaky condenser across speaker
Radiorgan	No effect	Insulation on 33m resistor cut through and shorts to cathode lug. Open leads, poor contact at switch, open condenser. 5714 only — plate lead of I.F. too far away from chassis. Push down close to metal base.
	Too much change on some, none on others.	Condenser shorted or leads shorting to switch.
	Tone changes with different settings of volume control.	Defective volume control or shorted terminal either of tone switch or volume control. Poor contacts and defective or shorted volume control taps.
	Noisy when tuning	Dirty wipers or gang plates. Flywheel touching band switch lug. Volume control or drive shaft not making good contact to ground. 5714 — Volume control shaft and drive shaft out of line.
	Volume control has two peaks and distorts at low volume.	Isolate 6F5 grid circuit from I.F. plate leads. (Later sets have I.F, plate lead shielded.)
5714 only	Set whistles at medium volume. Noisy between signals	Open filter condenser. —Loose connection or open condenser across RF choke.
Battery Sets	Hash	Loose cover of power pack.
	Hash on automatic position.	Automatic assembly touching power pack. Insulate at point of contact.

©John F. Rider, Publisher

ZEPHYR RADIO CO.

MODEL C
MODEL DA
Schematics

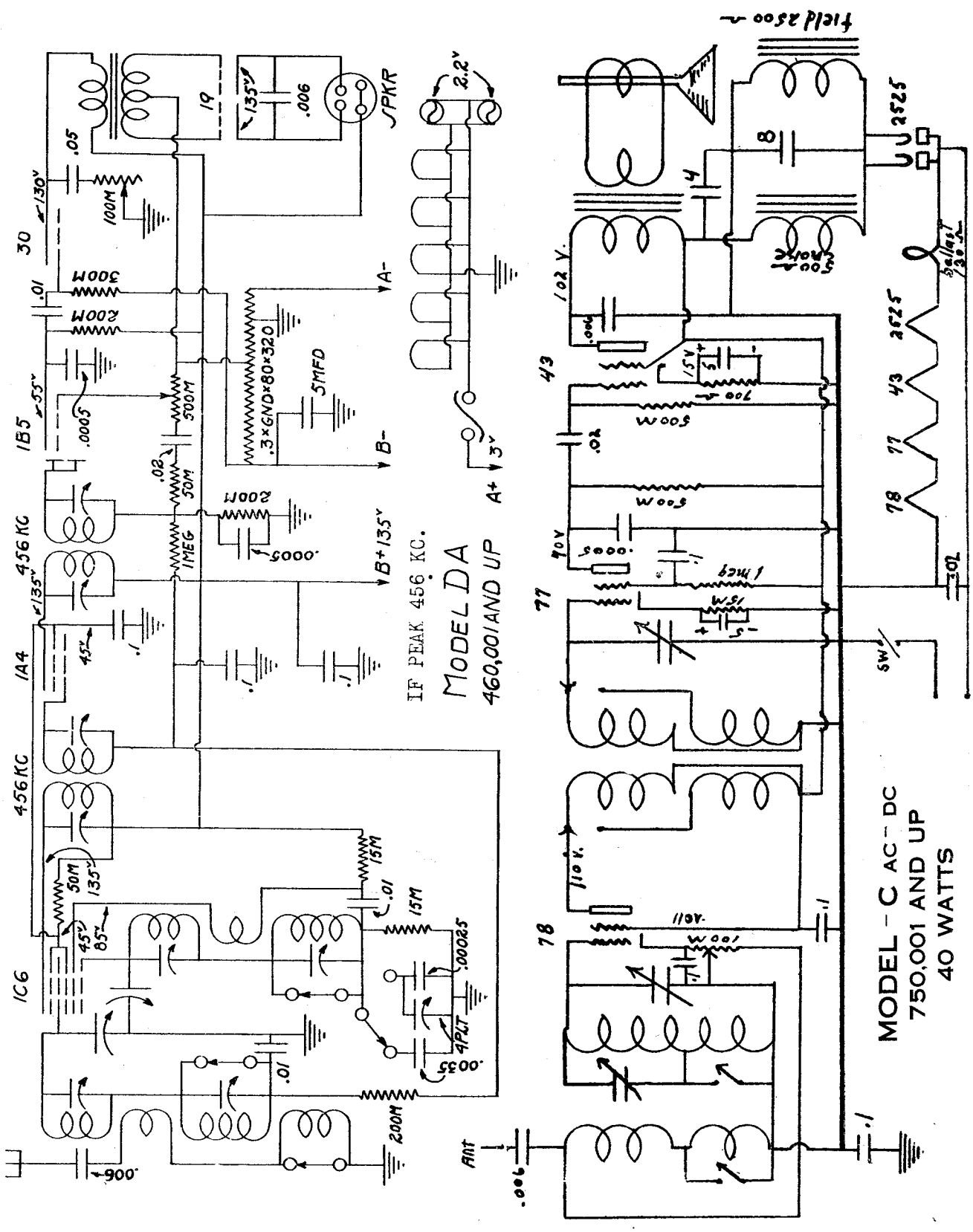

©John F. Rider, Publisher

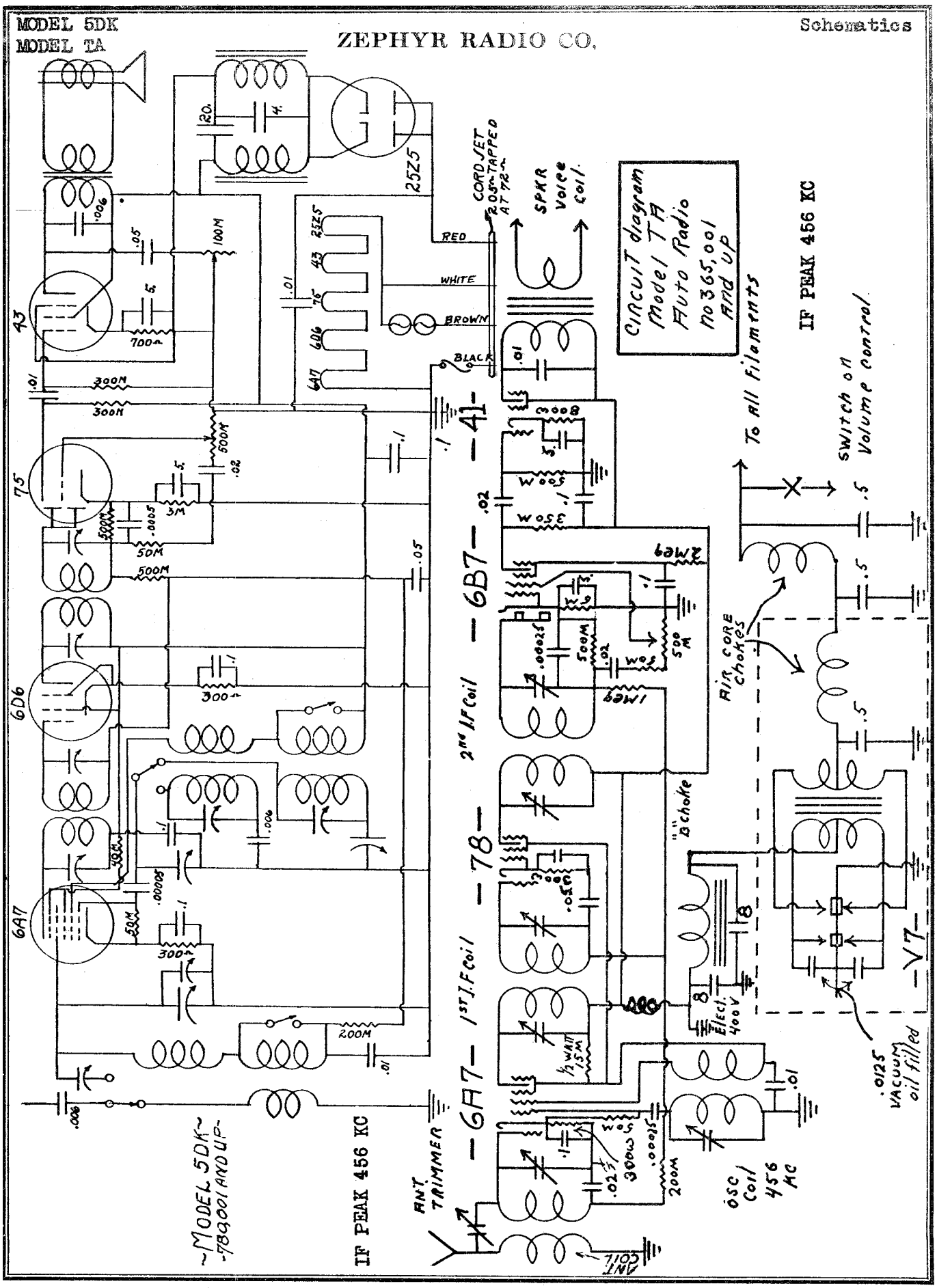

©John F. Rider, Publisher

MODELS D21, D22
Schematic

ANSLEY RADIO LABORATORIES

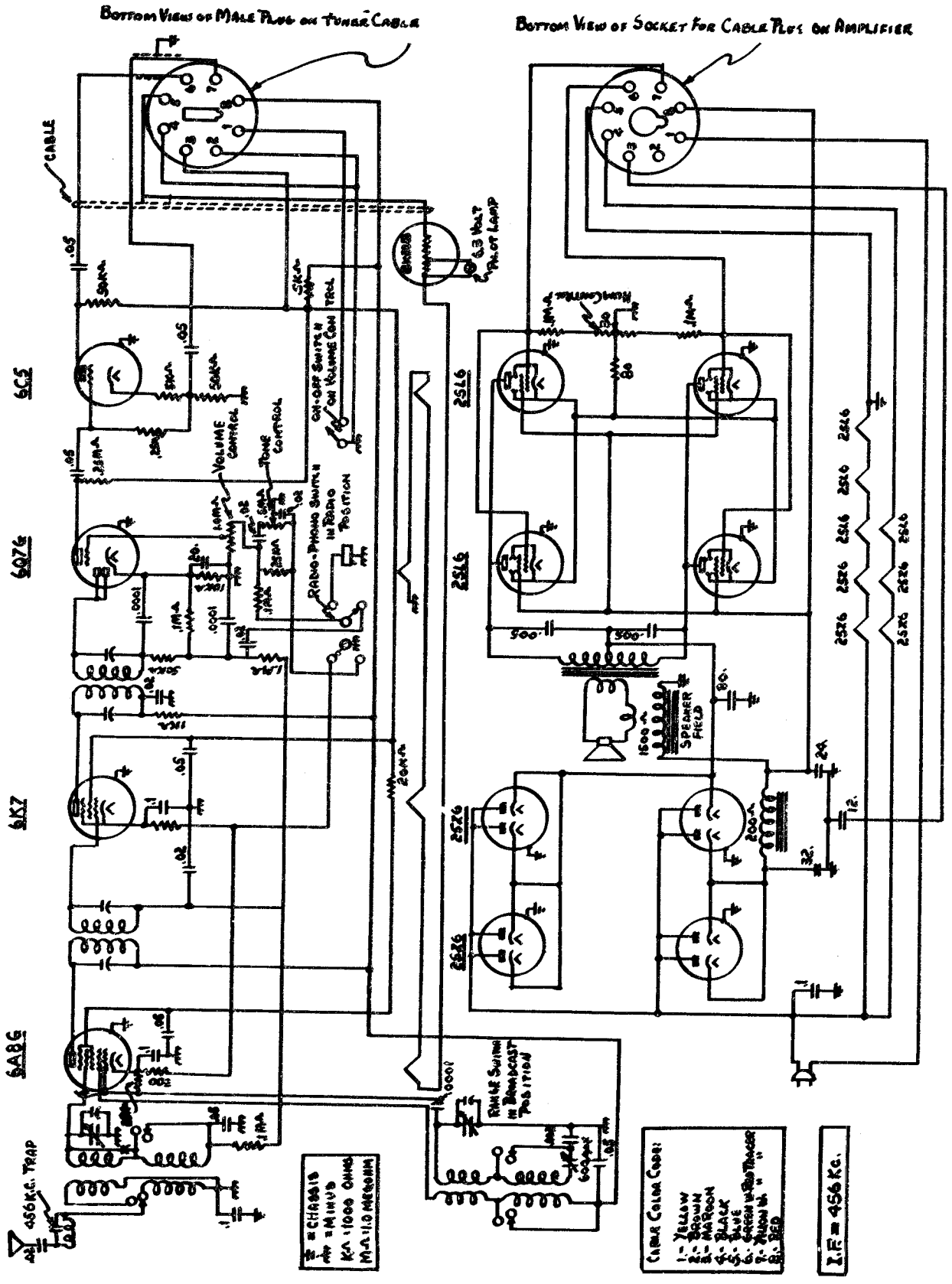

©John F. Rider, Publisher

MODEL 5M
MODELS 56SW, 57SW
Schematics, Parts

AUTOCRAT RADIO CORP.

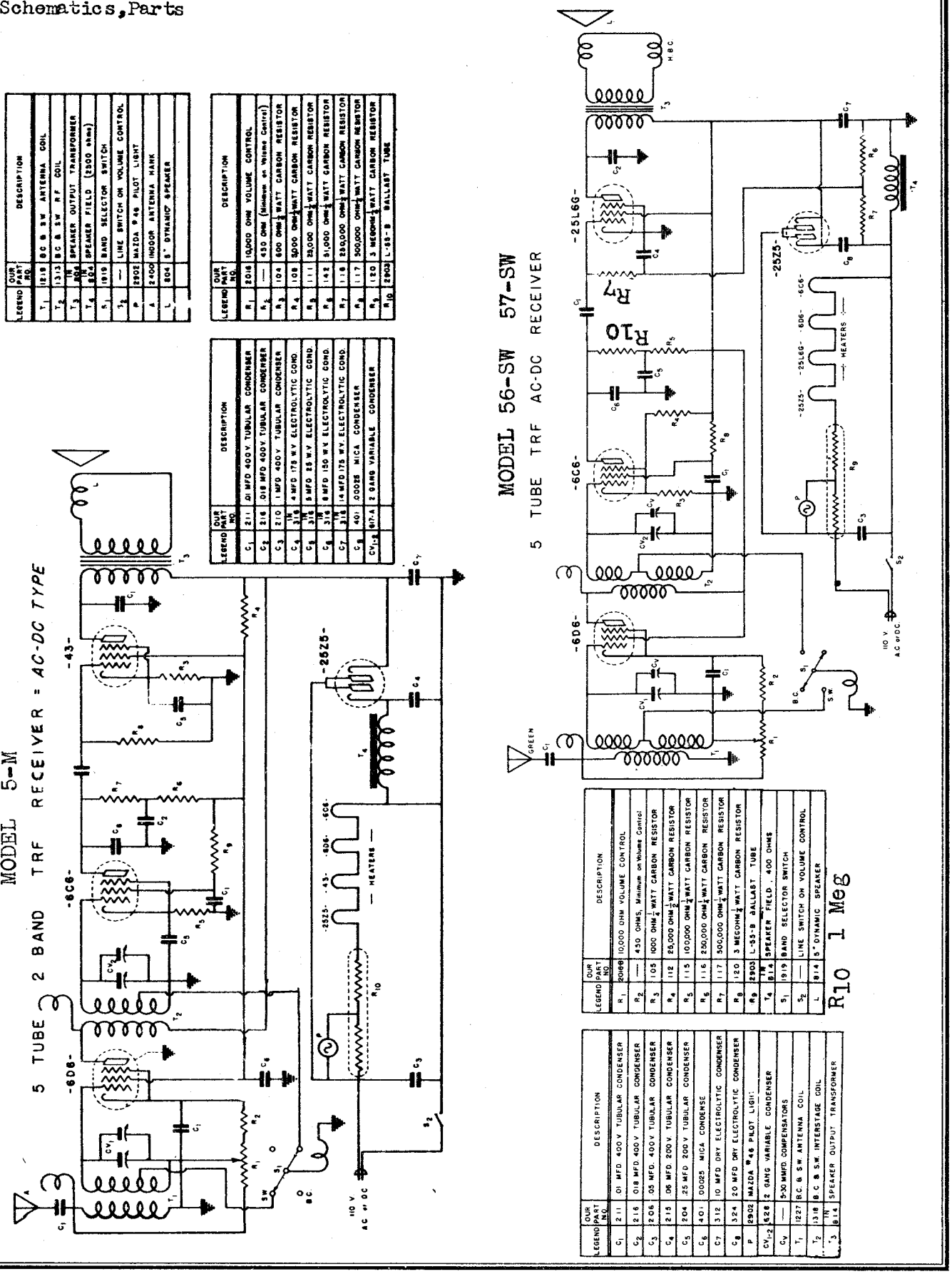

LEGEND	OUR PART NO.	DESCRIPTION
T_1	1218	BC & SW ANTENNA COIL
T_2	1313	BC & SW RF COIL
T_3	1314	SPEAKER OUTPUT TRANSFORMER
T_4	824	SPEAKER FIELD (2500 ohms)
S_1	1919	BAND SELECTOR SWITCH
S_2	—	LINE SWITCH ON VOLUME CONTROL
P	2902	MAZDA #46 PILOT LIGHT
A	2400	INDOOR ANTENNA HANK
L	804	5" DYNAMIC SPEAKER

LEGEND	OUR PART NO.	DESCRIPTION
R_1	2068	10,000 OHM VOLUME CONTROL
R_2	—	450 OHMS (Minimum on Volume Control)
R_3	105	600 OHM $\frac{1}{4}$ WATT CARBON RESISTOR
R_4	108	5000 OHM $\frac{1}{4}$ WATT CARBON RESISTOR
R_5	111	25,000 OHM $\frac{1}{4}$ WATT CARBON RESISTOR
R_6	142	51,000 OHM $\frac{1}{4}$ WATT CARBON RESISTOR
R_7	118	250,000 OHM $\frac{1}{4}$ WATT CARBON RESISTOR
R_8	117	500,000 OHM $\frac{1}{4}$ WATT CARBON RESISTOR
R_9	120	3 MEGOHM $\frac{1}{4}$ WATT CARBON RESISTOR
R_{10}	2903	L-93-B BALLAST TUBE

LEGEND	OUR PART NO.	DESCRIPTION
C_1	211	.01 MFD 400 V TUBULAR CONDENSER
C_2	216	.018 MFD 400 V TUBULAR CONDENSER
C_3	210	.1 MFD 400 V TUBULAR CONDENSER
C_4	1/8 316	4 MFD 175 W.V. ELECTROLYTIC COND.
C_5	1/8 316	8 MFD 175 W.V. ELECTROLYTIC COND.
C_6	1/8 316	8 MFD 150 W.V. ELECTROLYTIC COND.
C_7	1/8 316	14 MFD 175 W.V. ELECTROLYTIC COND.
C_8	401	.00025 MICA CONDENSER
C_{V1-2}	607-A	2 GANG VARIABLE CONDENSER

LEGEND	OUR PART NO.	DESCRIPTION
C_1	211	.01 MFD 400 V TUBULAR CONDENSER
C_2	216	.018 MFD 400 V TUBULAR CONDENSER
C_3	206	.05 MFD 400 V TUBULAR CONDENSER
C_4	215	.06 MFD 200 V TUBULAR CONDENSER
C_5	204	.25 MFD 200 V TUBULAR CONDENSER
C_6	401	.00025 MICA CONDENSE
C_7	312	.10 MFD DRY ELECTROLYTIC CONDENSER
C_8	324	20 MFD DRY ELECTROLYTIC CONDENSER
P	2902	MAZDA #46 PILOT LIGHT
C_{V1-2}	628	2 GANG VARIABLE CONDENSER
C_V	—	5-30 MMFD COMPENSATORS
T_1	1227	B.C. & S.W. ANTENNA COIL
T_2	1318	B.C. & S.W. INTERSTAGE COIL
T_3	1314	SPEAKER OUTPUT TRANSFORMER

LEGEND	OUR PART NO.	DESCRIPTION
R_1	2068	10,000 OHM VOLUME CONTROL
R_2	—	450 OHMS, Minimum on Volume Control
R_3	105	1000 OHM $\frac{1}{4}$ WATT CARBON RESISTOR
R_4	112	25,000 OHM $\frac{1}{4}$ WATT CARBON RESISTOR
R_5	115	100,000 OHM $\frac{1}{4}$ WATT CARBON RESISTOR
R_6	116	250,000 OHM $\frac{1}{4}$ WATT CARBON RESISTOR
R_7	117	500,000 OHM $\frac{1}{4}$ WATT CARBON RESISTOR
R_8	120	3 MEGOHM $\frac{1}{4}$ WATT CARBON RESISTOR
R_9	2903	L-93-B BALLAST TUBE
T_4	814	SPEAKER FIELD 400 OHMS
S_1	1919	BAND SELECTOR SWITCH
S_2	—	LINE SWITCH ON VOLUME CONTROL
L	814	5" DYNAMIC SPEAKER

©John F. Rider, Publisher

CLAGO RADIO CORP.
SHELLEY RADIO CO.

MODEL 531 "Heritage"
MODEL 25
Schematics

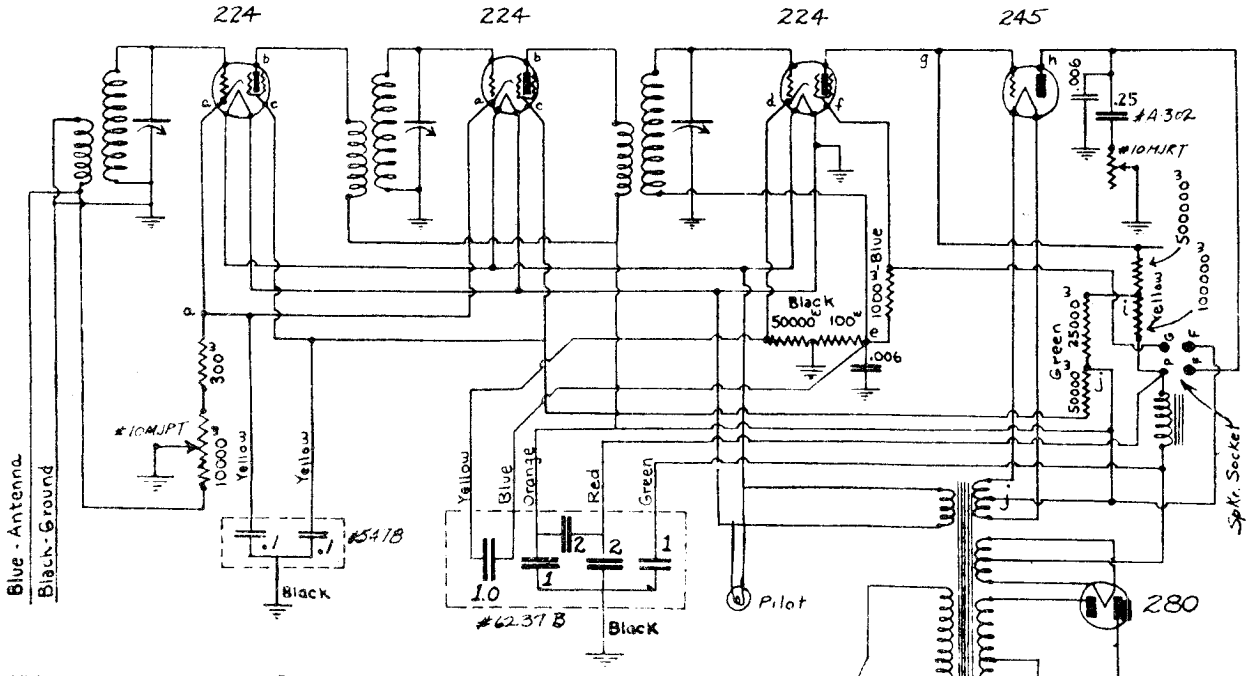

Circuit #531	Voltages at points in circuit (1000 ohm/volt meter 250 V. Sc.)		
CLAGO RADIO CORP. Chicago ——— U.S.A.	a - 5 to 14	e - 7	i - 200
	b - 180 to 200	f - 35	j - 180-200
	c - 80 to 150	g - 48	N.B. 2 voltages indicate no volume and full volume
	d - 9	h - 400	

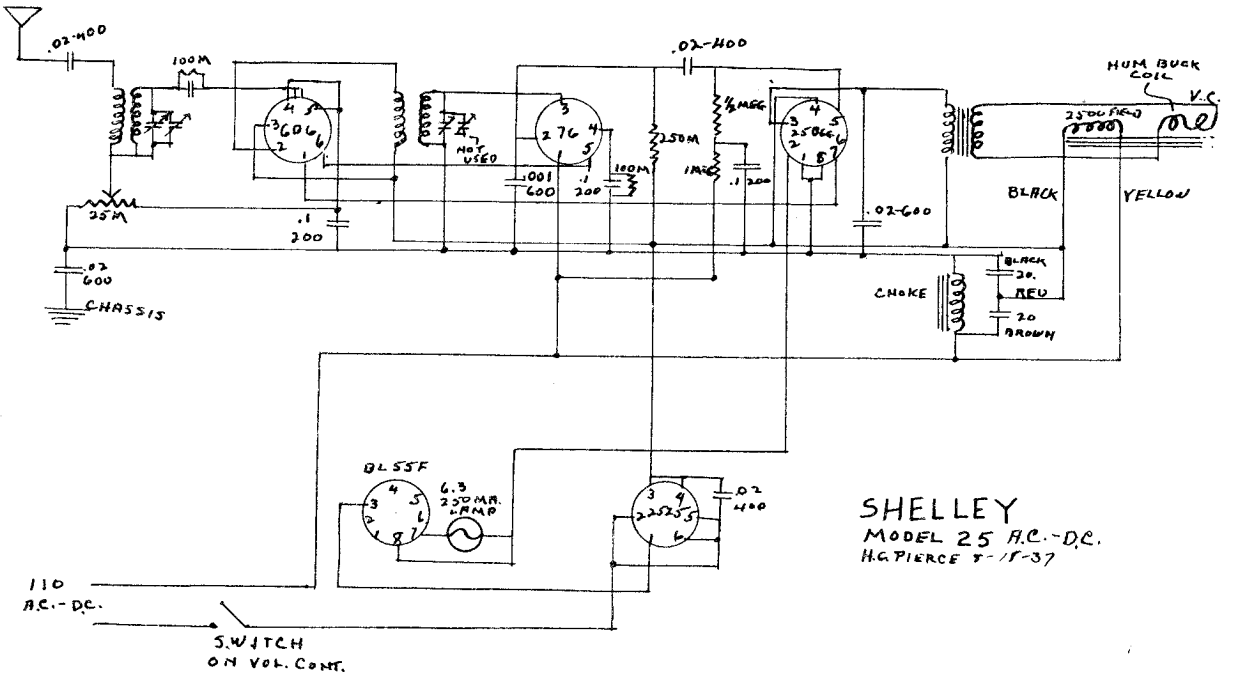

SHELLEY
MODEL 25 A.C.-D.C.
H.G. PIERCE 5-15-37

©John F. Rider, Publisher

MODEL PR4
Schematic, Notes
MODELS 100, "A"
Schematic, Socket

GENERAL TELEV. & RADIO CORP.
HARRIS MFG. CO.

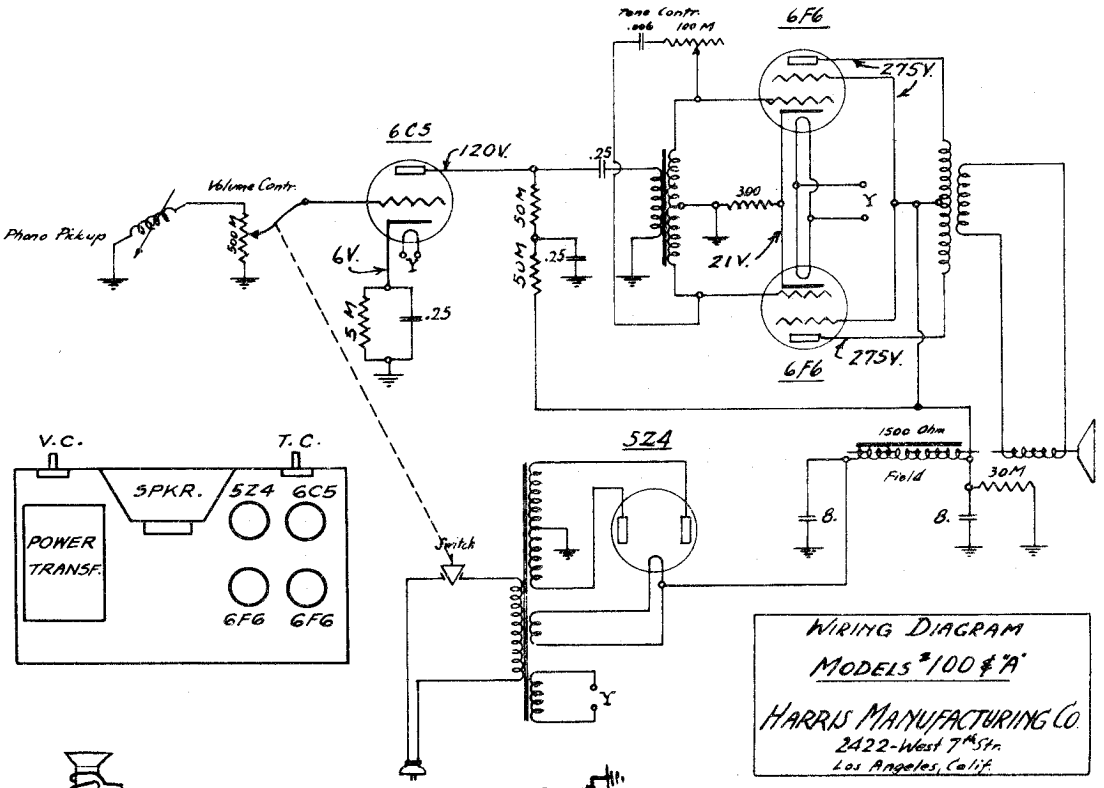

WIRING DIAGRAM
MODELS #100 & 'A'
HARRIS MANUFACTURING CO.
2422-West 7th St.
Los Angeles, Calif.

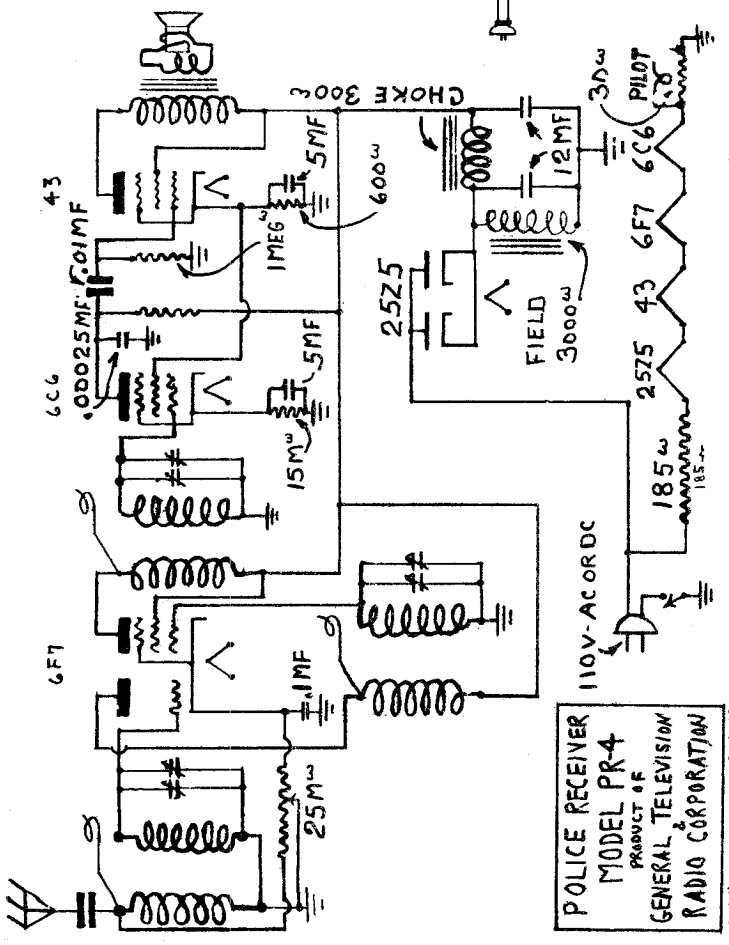

Service Notes
Police Receiver Model PR-4

This is a conventional universal receiver of the single fixed-frequency type. The three tuned circuits are aligned by means of double adjustable pads adjacent to the coils. The tube sockets are inverted and care should be taken when replacing tubes not to damage the socket prongs. Grounding of the shields is accomplished by means of metal strips contacting the tubes' cathode prongs and clamped by means of rings to the base of the shields. The volume control should be set somewhere below its spill-over point. The condenser block contains the two 12 MFD as well as the two 5 MFD sections. While the aligning is done at the factory before shipment it is suggested that re-alignment be made at the point of installation before putting into service. An outside antenna is required for satisfactory operation in most locations. This receiver is designed to operate on 105 to 120 volts A.C. or D.C.

©John F. Rider, Publisher

©John F. Rider, Publisher

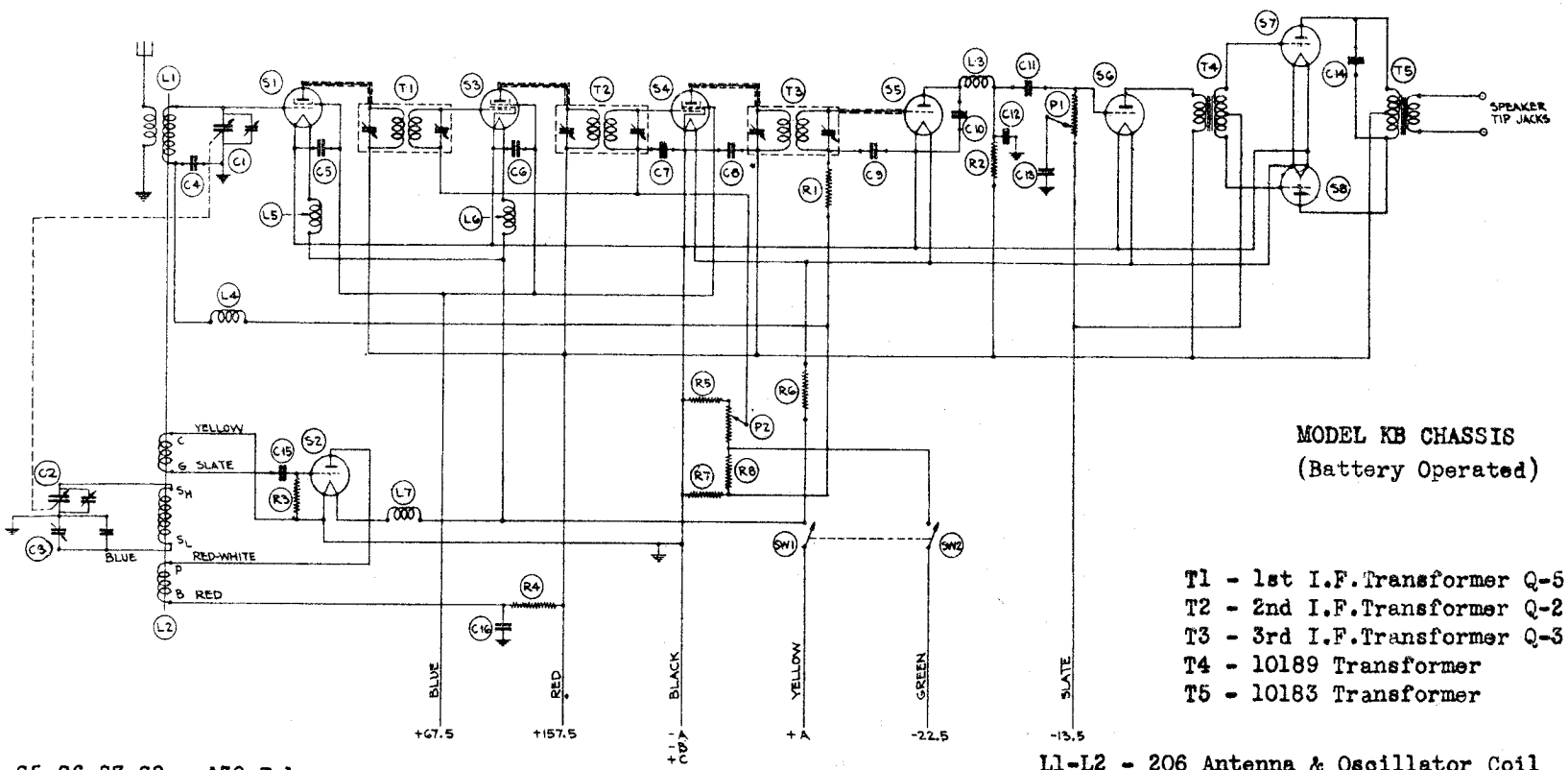

MODEL KB CHASSIS
(Battery Operated)

T1 - 1st I.F.Transformer Q-5
T2 - 2nd I.F.Transformer Q-2
T3 - 3rd I.F.Transformer Q-3
T4 - 10189 Transformer
T5 - 10183 Transformer

S2-S5-S6-S7-S8 - '30 Tube
S1 - '32 Tube
S3-S4 - '34 Tube

C1-C2 - 2 gang variable cond. 365 mmfd. Max.-5 mmfd.
C3 - Oscillator Trimmer Assem.
C4 - .1 mfd. Cond. Sprague - 200 V.
C5 - .1 mfd. Cond. Sprague - 200 V.
C6 - .25 mfd. Cond.
C7-C8 - Dual .1 mfd. Cond. - 150 V.
C9 - .1 mfd. Cond. Sprague - 200 V.
C10 - .001 mfd. Cond. Mica
C11 - .025 mfd. Cond. Sprague
C12 - .001 mfd. Cond. Mica
C13 - .025 mfd. Cond. Sprague
C14 - .006 mfd. Cond. Mica
C15 - .001 mfd. Cond. Mica
C16 - .25 mfd. Cond. - 300 V.

L1-L2 - 206 Antenna & Oscillator Coil
L3 - 281 R.F.Choke
L4 - 281 R. F.Choke
L5 - 284 Choke
L6 - 284 Choke
L7 - 284 Choke

P1 - ½ Megohm Pot. (Tone Control)
P2 - 100,000 ohm Pot. (Volume Control)

R1 - ½ Megohm Resistor - 1 watt
R2 - 150,000 ohm Resistor - 1 watt
R3 - 15,000 ohm Resistor - 1 watt
R4 - 18,000 ohm Resistor - 1 watt
R5 - 15,000 ohm Resistor - 1 watt
R6 - .693 ohm Resistor - wire wound
R7 - 30,000 ohm Resistor - 1 watt
R8 - 60,000 ohm Resistor - 1 watt

SW1-SW2 - On-Off Switch (Double pole single throw)

MODEL KB21 RECEIVER			
SKETCH BY H.D.	DATE 3-28-32		
DRAWN BY A.W.A.			
CHECKED BY [illegible]	APPVD. BY [illegible]		
CHANGE	DATE	BY	APPVD.
SILVER-MARSHALL, INC.	156-2		

April 1st, 1932

Belmont 589 Series "A"

The Issue "B" of this chassis has a 0.05-mf, 400-volt condenser in parallel with the 5-mf condenser, C-10. See schematic on *page 8-5 of Rider's Volume VIII.* This new condenser has a Part No. 100-13 and is identified as C-20.

The unidentified trimmer condenser connected between the lower end of the secondary of T-1 and ground has been given a schematic number, C-21. The unidentified trimmer between the lower end of the oscillator primary (T-2) and ground is C-22. C-21 has a range from 1 to 10 mmf and C-22 from 2 to 20 mmf. Both these condensers are in the same unit, the part number of which is 124-30C.

These two trimmers being in the same unit change the bottom layout of the chassis shown on page 8-5. The adjustment nearer the trimmer marked "ANT-17 MC-TRIMMER" in the layout is the 1400-kc antenna trimmer, C-21, and the one nearer the broadcast series padder is the 1720-kc oscillator trimmer, C-22.

These changes apply to receivers having a serial number above 8E-189200.

Continental 78,780

Models 77 and 770, *page 8-20 of Rider's Volume VIII,* employ an electrodynamic loud speaker. Models 78 and 780 use exactly the same chassis as the Model 77, but in this case the speaker is an 8-inch permanent-magnet type. Please add this information to your index under Continental Radio & Television Corp.

Crosley 163

The following notations should be made on the schematic of this set, which will be found on *page 3-33 of Rider's Volume III and on page 757 of the Rider Combination Manual.*

Draw a connection between the lower end of the secondary of the first i-f transformer and the arm of the volume control. A 10,000-ohm resistor should be shown between the B plus lead going to the primary of the first i-f transformer and the cathode of the 78 i-f tube. No connection should be shown between the windings of the second i-f transformer. The value of the resistor in the cathode circuit of the 77 second detector is 150,000 ohms.

Emerson Chassis AS

In sets having serial numbers above 1,294,500, the 150,000-ohm resistor, R8, was changed to 50,000 ohms and the 240-ohm resistor, R10, was changed to 310 ohms.

In sets with serial numbers above 1,294,700, C31 was changed from 0.002-mf to 0.006-mf. The speaker was changed from Part No. 4FS-274 to 4SS-278.

See schematic diagram on *page 8-49 of Rider's Volume VIII.*

Emerson Chassis F

The accompanying schematic shows the changes that were made in the circuit of receivers carrying serial numbers above 862,650. The schematic of those sets having serial numbers under 862,650 will be found on *page 7-25 in Rider's Volume VII.* Note that a 6Q7G has been substituted for the 75 second detector and that the 43 output tube has been replaced by a 25B5 in this later chassis.

Below will be found the voltage readings for those chassis having serial numbers above 862,650:

Tube	Plate	Screen	Cathode	Osc. Plate	Fil.
6A7	112	34	2.4	67	6.3
6D6	112	90	4.2	..	6.3
6Q7G	52	...	1.2	..	6.3
25B5	102	112	0	..	25

Voltage across speaker field, 126.
Voltage across filter choke, 10.
Voltage drop across ballast resistor (R-18) is 49 volts between pins 3 and 8.

The alignment data on the early chassis also applies to this receiver. See *page 7-26 in Rider's Volume VII* for these and other instructions.

•

Emerson Chassis H

In the portable model (H-137), after approximately 135 hours of service the initial fresh battery performance may be restored by shifting the 67½-volt lead, which is brown, to the 90-volt terminal of the "B" batteries. This will increase the screen voltage to about its normal value.

The alignment of this chassis is conventional, using the i-f peak of 456-kc for the four i-f trimmers, the locations for which will be found on *page 7-39 of Rider's Volume VII,* and 1500-kc for the aligning of the oscillator, r-f, and antenna trimmers with a 0.0002-mf condenser as a dummy antenna.

Emerson AC Chassis

Please make a note on *page 8-9 of Rider's Volume VIII* of the following change which was received too late for inclusion.

In receivers with serial numbers above 1,335,494 a new antenna coil

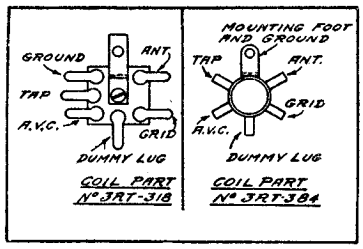

Lug arrangement of old and new antenna coils in Emerson AC Chassis.

(Part No. 3RT-384) was substituted for the one having the Part No. 3RT-318. These two coils are interchangeable and the lug arrangements of both coils are shown in the accompanying illustration.

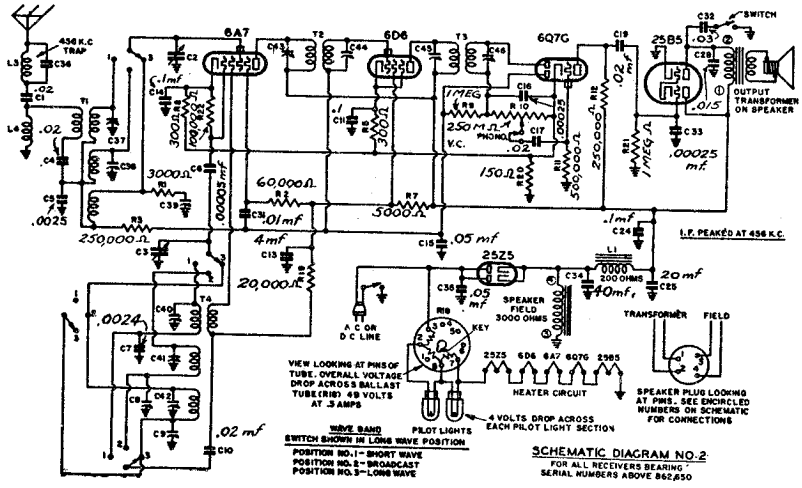

The revised schematic for Emerson models F117, F122, F133, F135, and F141 carrying serial numbers above 862,650. One of the major changes is the substitution of a 6Q7G for the 75 second detector.

©John F. Rider, Publisher

Emerson Chassis C

The revisions of this chassis as noted on page 6 of the February 1937 issue of SUCCESSFUL SERVICING and subsequently published on *Changes page 8-1 of Rider's Volume VIII,* have another change. The 0.01-mf condenser, No. 55, which was connected across the primary of the output transformer, is now connected from the plate of the 6L6 output tube to ground.

Also on receivers having serial numbers above 880,050 the short-wave antenna and detector coil trimmers, C6 and C9 (see schematic on *page 7-36 of Rider's Volume VII*) are mounted on their respective coils. C6 is connected directly across the secondary of the short-wave antenna coil, T3, and is not returned to ground, as shown on the schematic.

Emerson U-154

In receivers having serial numbers above 1,173,551, the pre-selector coil was changed from Part No. 3UT-331 to 3UT-365; the oscillator coil was changed from Part No. 3UT-325 to 3UT-366; and the three-gang variable condenser from Part No. 3VC-319A to 3VC-359. This substitution of the variable condenser necessitates a change in the alignment. On *page 8-34 of Rider's Volume VIII* the signal generator frequency for the r-f and oscillator alignment is designated as 1530 kc. This is used on those sets having a variable condenser with the part number of 3VC-319 or 3VC-319A. When this number is 3VC-359, the signal frequency is 1570 kc.

The following changes were made to receivers having serial numbers above 1,171,661: The first i-f transformer was changed from Part No. 3UT-332 to 3UT-369. A small capacity coupler was added between the oscillator (central) and i-f (front) sections of the variable condenser. These sections are C3 and C2 respectively on the schematic diagram shown on *page 8-33 of Rider's Volume VIII.* The 0.003-mf condenser, C-22, is now connected between the plate of the 41 output tube and B+ instead of ground, as it is shown in the schematic.

On sets having serial numbers above 949,553, the cathode of the 6D6 a-f amplifier tube is connected to the cathodes of the 6D6 i-f amplifier and the 76 second detector tubes through a 1000-ohm series resistor and not connected directly as shown in the schematic.

Emerson Chassis D

In receivers having serial numbers above 850,000, a 15,000-ohm resistor has been connected from the tap on the volume control to ground. This is a ¼-watt carbon resistor, Part No. KR-63.

In receivers having serial numbers above 864,755, the resistor, R-20 that is connected from the cathode of the 6C5 phase inverter tube to ground, has been changed from 5000 ohms to 10,000 ohms.

Please make these changes on the schematic of this chassis on *page 7-37 of Rider's Volume VII.*

Emerson AR Combination Chassis

We received too late for publication in *Volume VIII of Rider's Manuals* data on Models AR-165, AR-166, and AR-177 in which are incorporated the Chassis AR with a phonograph. The service notes on the AR chassis which may be found on *Emerson pages 8-41 to 8-44 in Rider's Volume VIII,* apply to the early production of these combination models, less, of course, the phonograph connections. The later models (those after serial No. 1,326,-200) have two 41 tubes in push-pull, instead of the single 41 in the output; also a 6Q7G is substituted for the 76 second detector and avc. This new tube is also used as an audio amplifier.

Emerson Chassis AF

The 0.25-mf condenser, C-17, that was connected between the negative side of the filament and ground, has been eliminated and now this side of the filament is grounded to the chassis. This applies to those receivers having serial numbers above 1,244,716. The schematic of this set will be found on *page 8-45 of Rider's Volume VIII.*

Grigsby-Grunow 310-B Chassis

Please change the value of C-16 of the *early* model from 11 mf to 0.11 mf. The parts list in which this error appears is on *Majestic page 3-22 of Rider's Volume III and page 1214 of the Rider Combination Manual.*

Emerson C134LW, C136LW, C138LW, C139LW, C140LW and C142LW

The schematic is the same as is given in *Rider's Vol. VII, page* 7-36, with the exception that C11 is a 0.00005-mf. fixed condenser shunted by a trimmer, C50, which is part of the long-wave coil assembly. The r-f. primary of T5, position 2, is shunted by a fixed condenser of 0.0001 mf. (C45), and a 2000-ohm resistor (R30).

The Long-Wave band has been substituted for the Police band in position 2. T2 is a long-wave antenna coil, T5 is the long-wave detector coil, and T8 is the long-wave oscillator coil.

C6 and C9 trimmers were supplied separately and later incorporated as part of SW Antenna and Detector coil assemblies.

The alignment of the long-wave band is as follows:

Set the wave-band switch at the long-wave (central) position and the pointer to 150. Feed 150 kc. through a standard dummy antenna to the antenna terminal and adjust the long-wave series padder for maximum response. Move the pointer to 345, feed 345 kc. and adjust the long-wave oscillator trimmer. Then adjust the r-f. trimmer, and next the antenna trimmer for maximum response. Return to 150 kc. and re-adjust the long-wave series padder for maximum response. Return to 345 kc. and re-adjust all three trimmers. Return again to 150 and check the alignment. Repeat the entire procedure until no appreciable re-adjustment is required.

The layout of the tuner unit is shown below for this long-wave chassis.

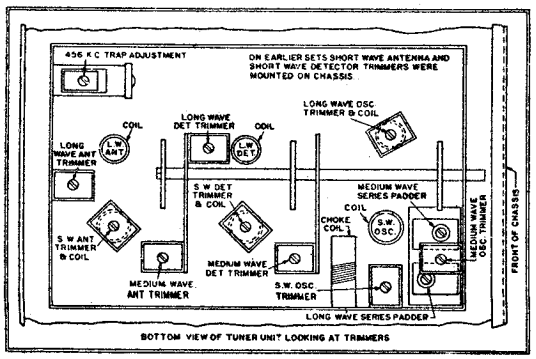

The chassis layout of the long-wave Emerson chassis used in models C134LW, C136LW, C138LW C139LW, C140LW, and C142LW shown at the left differs from the chassis which includes the police band instead of the long-wave band.

©John F. Rider, Publisher

G.E. D-51, D-52

A switch is provided in these chassis which is used to cut in and out a series audio coupling condenser between the plate of the 6B7 second detector-avc-af tube and the control grid of the 41 output tube. In most cases it has been found best to allow this switch to remain closed all the time; therefore, its usefulness can be increased by making the following changes:

Disconnect the two wires connected to the switch, S2 in the schematic found on *RCA page 6-9 in Rider's Volume VI,* and after soldering them together, tape them.

Connect a wire from the control grid cap connector of the 6B7 to one terminal of the switch. To the other terminal of S2, connect one side of a 0.0015-mf condenser and connect the other side of the condenser to the case of the receiver.

This procedure provides a two-point tone control which is extremely effective in reducing the tube hiss on weak signals. When the incoming signal is strong, the condenser may be switched out of the circuit, which gives the best fidelity. This type of tone control is more effective in reducing noise than the usual type of control connected across the output of the 41 power amplifier.

Motorola 5T-71A

The schematic for this chassis is the same as that shown on *page 3-2 in Rider's Volume III and on page 1054 in the Rider Combination Manual,* with the following changes:

The 0.25-megohm and 1-megohm resistors in series in the plate circuit of the third 24 r-f tube and the 0.1-mf by-pass condenser from their junction, have been replaced with a choke having the same parts number as the one shown in the grid circuit of the 171A output tube. This choke is connected directly between the plate of the 24 tube and the +B lead.

The choke in the grid circuit of the output tube has been replaced with a 0.2-megohm resistor.

Mid-West 7-36

As was noted on *page 7-2 in Rider's Volume VII,* the tube complement of the late model of this receiver was changed, four metal tubes being employed. Below will be found the voltage data for both the early and the late models.

Early 7-36

Tube		Plate	Screen	Cathode	Supp.	Grid
58	R-F	235	80	0	0	AVC
56	Osc.	120	—	1	—	—
58	Mixer	215	80	1	1	AVC
58	1st I-F	190	80	0	0	AVC
55	2nd Det	35	—	0	0	
2A5	Output	220	245	0	0	17.5
80	Rect	240 volts from filter				

Filament voltage, 2.5

Late 7-36

Tube		Plate	Screen	Supp.	Cathode
6K7	R-F	225	100	0	0
6K7	Mixer	225	100	3	3
6C5	Osc	150	0	0	0
85	2nd Det-AF	30	0	0	0
		0			
42	Output	225	250	0	0
80	Rect	250 A-C			

Filament voltage, 5.9 Volume control at maximum

Arvin Chassis 518

In order to correct the calibration of the dial, the following procedure is to be used:

Rotate the dial pointer to 550 kc. Press with the thumb on the dial face above its center. Rotate the tuning knob while preventing the dial pointer from moving. This will enable the position of the dial pointer to be varied with respect to the tuning condenser and makes it possible to readjust the calibration without removing the chassis from its cabinet.

For other servicing data see *pages 8-10, 8-12, and 8-13 in Rider's Volume VIII.*

G.E. B-40

The schematic of this receiver, which is the same as RCA M-34, is shown on *RCA page 3-14 of Rider's Volume III and page 1854 of the Rider Combination Manual.* The change explained below will increase the audio gain on medium and strong signals and also improve the A.V.C. action. The partial schematic shown herewith are the original and revised circuits.

Interchange the connections at the terminal board of the red and green wires from the volume control. This places the grid coupling condenser in the circuit of the movable arm of the volume control. Then disconnect the green A.V.C. lead from the terminal board. (This lead is connected to the second terminal from the end on the bottom side of the terminal strip.) Solder a small 2-megohm resistor to this lead and solder the other end of the resistor to the lug on the terminal board to which the green lead from the volume control is attached.

Lafayette M-31 (1935)

Please make this change on the lower schematic on *Lafayette page 8-6 in Rider's Volume VIII:* A connection should be made where the lead from B+ crosses the lead from the plate of the 58. A jumper appears there in the schematic.

Philco 602

The tap between the voice coil and the hum bucking coil should be grounded to minimize hum. See schematic on *page 7-83 of Rider's Volume VII.*

The 133-15 ohms resistor, No. 36, has a part number 33-3235 instead of 33-3225.

Beginning with Run No. 3, the tuning condenser assembly was changed to a vernier type. The part number of this condenser, scale, and pointer remain the same.

The 1-megohm resistor, No. 40 had a rating of ¼ watt. This should be replaced with a ½ watt resistor of the same resistance value; the Part No. 33-510344.

Philco 270

Please make a note in your Index to Rider's Manuals that the parts list of Model 70 applies to the schematic of Model 270, found on *page 1-28 of the revised edition of Rider's Volume I; on page *466-C of the early edition; and on page 1057 of the Rider Combination Manual.*

Philco 116

A 50-mmf. condenser has been added from the end terminal of condenser No. 63 (see schematic on *page 6-11 of Rider's Volume VI*) to ground. This addition was made to prevent oscillation.

As of Run No. 14, the 1-megohm resistor, No. 81, has been changed from Part No. 4409 to 33-510344.

A change has been made in the design of the volume control, No. 66 on the schematic, the old part number was 33-5022 and this has been replaced with Part No. 33-5153.

The Model K-17 speaker, Part No. 36-1025, is used on the new Model 116-B. The cone assembly number is 02996; the field coil and pot assembly is 36-3104.

Philco 116X

The resistance of the field coil, No. 95 on the schematic shown on *page 6-13 of Rider's Volume VI,* is shown as 1125 ohms. Change notes from the manufacturer state that this value is 1450 ohms.

The volume control No. 68 has been changed from Part No. 33-5110 to 33-5155.

Philco I-F Transformers

The i-f transformers of several models have been changed and are listed below. In each case the new part number of the first i-f transformer is 32-2296 and that of the second i-f transformer is 32-2298.

Model	*Parts List on Page*	*Rider's Volume*
37-33	7-15	VII
37-34	8-17	VIII
37-38*	7-17	VII
37-623	7-55	VII
37-624	8-23	VIII

The second i-f transformer has a tertiary winding which is connected in series with the screen-grid circuit of the 1D5G i-f tube.

*In order to prevent oscillation in the i-f circuit of Model 37-38, a tubular condenser, Part No. 30-4020, 0.05 mf, is connected from the screens of the 1C7G detector-oscillator and the 1D5G i-f tubes to ground.

Philco 37-9, Code 121

Run No. 2. Condenser No. 35 has been changed from 16 mf to 18 mf, Part No. 30-2194.

To improve the operation of the i-f circuit, a 0.1-mf condenser, Part No. 30-4455, has been connected from the red lead of the primary of the i-f transformer, No. 53, to ground.

To prevent distortion at minimum volume, the green-white wire connecting the center lug of the volume control, No. 67, to the automatic tuning dial a-f switch, No. 93, must be kept clear of the compensator, No. 54, and the diode circuit of the 6Q7G.

Run No. 3. Condensers 70 and 70A have been replaced by 8- and 10-mf condensers respectively, Part No. 30-2201. The 8-mf condenser, No. 72, has been replaced by a 18-mf condenser, Part No. 30-2200.

The schematic of this receiver will be found on *page 8-11 of Rider's Volume VIII.* Note that the dial calibration notes of Model 37-10, see *page 8-15,* can be used for calibrating the dial of Model 37-9.

Philco 38-39

In order to reduce maximum volume buzz, the following parts were changed: the 11.7-ohm resistor, No. 22, was changed to 12.3 ohms; the 2-megohm resistor, No. 30, was changed to 4 megohms; and the 160,000-ohm resistor, No. 27, was changed to 240,000 ohms. See schematic on *page 8-75 of Rider's Volume VIII.*

Philco 38-4, 38-5

When either of these models are operated on 25 cycles, a power transformer, Part No. 32-7598 must be employed. Also a 0.1-mf condenser must be connected across the speaker field coil, No. 65.

In order to reduce station rumble in the Model 38-4, the following parts were changed: the 0.01-mf condenser, No. 36, was changed to 0.0015 mf. and the 40,000-ohm resistor, No. 38, changed to 32,000 ohms.

In order to reduce frequency drift at the high-frequency end of the broadcast tuning range, in Run No. 3 the compensator No. 16, 1500 kc, Part No. 31-6196, was replaced with Part No. 31-6206, and two condensers, Part No. 30-1097, are connected in parallel with the new condenser. The range 1 oscillator transformer, No. 15, was changed from Part No. 32-2631 to 32-2894.

In Run No. 4 of 38-4 and Run No. 2 of 38-5, the 70,000-ohm resistor, No. 19, was changed to 51,000 ohms to improve the performance of the oscillator circuit on the short-wave bands. For schematic see *page 8-61 in Rider's Volume VIII.*

Philco 38-7, Codes 121,124

Run No. 2 To provide uniform performance of the oscillator circuit, a 20-ohm resistor was connected in series with the cathode of the 6A8G detector-oscillator tube. See schematic on *page 8-65 of Rider's Volume VIII.*

In order to reduce bass response, the following parts were changed in the Code 124 chassis:

Condenser, No. 24, was changed from 0.01 mf to 0.001 mf, Part No. 30-4201. Resistor, No. 32, was changed from 51,000 ohms to 40,000 ohms, Part No. 33-340339. Condenser, No. 38, was changed from 0.006 mf to 0.01 mf, Part No. 30-4479.

Run No. 3. To reduce frequency drift further at the high-frequency end of the broadcast range, the compensator, No. 7A, was replaced with Part No. 31-6206. Also a new thermal compensator was connected in parallel with compensator, No. 7A and mounted near resistor No. 12. The resistor is mounted in the chassis with a mounting clamp and an asbestos insulator. The resistor must be mounted like this or else the thermal compensator will not function properly.

Run No. 4. The thermal compensator added to the chassis in Run No. 3, was replaced by two fixed condensers, Part No. 30-1097.

Run No. 5. The 20-ohm resistor added in Run No. 2 was removed.

The part numbers of Nos. 26, 39, and 48 found in the list of parts on *page 8-66* are correct for Models 38-8 and 38-9. The correct part numbers for Model 38-7, both codes, follow:

No. 26, Volume Control, Part No. 33-5225; No. 39, Tone Control, Part No. 42-1347; and No. 48, Range Switch, Part No. 42-1339.

Philco 38-8, Code 121

Run No. 2. In order to increase the sensitivity of the shadowmeter, the following changes were made: Resistor, No. 12, was changed from 10,000 ohms to 13,000 ohms, Part No. 33-313639 and condenser, No. 17, was changed from 0.05 mf to 0.25 mf, Part No. 30-4134. See schematic on *page 8-65 of Rider's Volume VIII.*

Run No. 3. To provide uniform performance of the oscillator circuit, a 20-ohm resistor was connected in series with the cathode of the 6A8G detector-oscillator tube.

Run No. 4. In order to increase the a-f response in the high frequencies, condenser No. 40, was changed from 0.008 mf to 0.004 mf, Part No. 30-4456.

Run No. 5. The 20-ohm resistor added in Run No. 3, was removed.

Philco 610

We have been advised by the manufacturer that the following changes should be made in the schematic numbers of this model found on *page 6-19 of Rider's Volume VI:* the schematic number 54 should be changed to 41; No. 41 to 56; No. 56 to 54; No. 39 to 40; and No. 40 to 39. This will make the numbers of the wiring diagram, the base view, and the parts list agree.

Beginning with Run No. 15, the oscillator circuit of the second type of this chassis (*see page 7-87 of Rider's Volume VII*) was changed to improve the oscillator action at 6.0 mc. Resistors No. 17 and No. 18 (51,000 ohms and 25,000 ohms) were removed. A 32,000-ohm resistor (Part No. 33-332133) was added from the switch terminal side of condenser No. 7 in the antenna circuit to ground. A 20-ohm resistor, Part No. 33-020133 was connected between the 6A7 cathode and ground.

©John F. Rider, Publisher

Philco 38-38

Beginning with Run No. 3, the 8000-ohm resistor, No. 21, was removed from the 90-volt tap and reconnected to the 135-volt tap of the battery cable. At the same time the value of this resistor was changed from 8000 to 25,000 ohms, Part No. 33-325339. The battery cable assembly was changed also to Part No. 41-3394.

In Run No. 4, the 900-ohm resistor No. 38 was changed to 2000 ohms, Part No. 33-220339. This change was made to decrease current drain on the "BC" battery. For schematic see *page 8-73 of Rider's Volume VIII.*

Philco 511, 521

The model 521 is for operation on 25-40 cycles and is similar to the model 511 (60-cycle operation) except as noted below. Please add 521 to the designation on *page 8-107 in Rider's Volume VIII.*

A change in the wiring has been made. The primary of the third r-f transformer instead of going to the left side of the resistor No. 17 now is connected to the other end. Plate voltage for the r-f tubes obtained from the point marked "D" in the voltage divider, No. 37, now is fed in to the resistors Nos. 7, 12, and 17 through

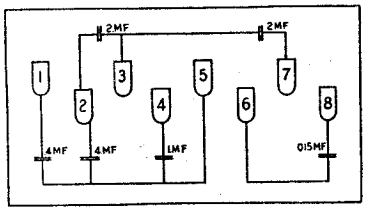

Fig. 2. Filter condenser pack of Philco Model 511 for 60-cycle operation.

the left end of this combination immediately below the first r-f tube. The primary of this r-f transformer now is connected to the right side of No. 7 in the schematic. In other words, the lead marked "D", at the right end of the three series resistors now is at the left end.

The accompanying partial schematic

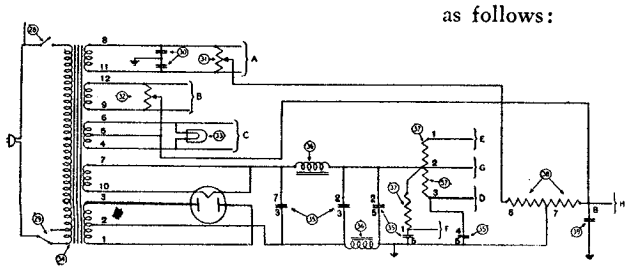

Fig. 1. Schematic of the power pack and filter used in Philco Models 511 and 521. The condenser values for each model can be found in Figs. 1 and 3 above.

Fig. 1 of the power pack and filter carries various numberings, which correspond to those of Figs. 2 and 3 and show the capacity values of the filter condenser packs No. 35 used for model 511 and 521 respectively. Note that the connections of the 1-mf condenser, 4-5, have been changed from the way they are shown in the schematic on page 8-107. Instead of terminal 4 of No. 35 being connected to terminal 3 of No. 37 it is connected to terminal 1 of No. 35.

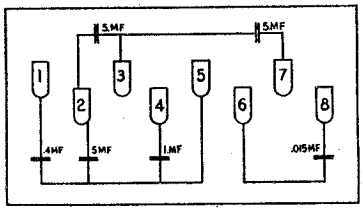

Fig. 3. Filter condenser pack of Philco Model 521 for 25-cycle operation.

The voltage readings are as follows:

Type	Circuit	Fil.	Plate	Grid	Plate MA
26	1, 2, 3 r-f, 1 a-f	1.62	98	6	4
27	Detector	2.65	38	..	1.5
71	2 a-f	5.26	148	29	17
80	Rect.	5.26	375 a-c Ea. pl.		30

The voltages at the terminals of the power transformer, No. 34, are:

Terminals	A-C Volts
1-3	375
4-6	4.85
7-10	4.8
8-11	1.55
9-12	2.47

In the bottom view of the chassis on page 8-107, the voltage divider (in the lower left corner) has its terminals numbered corresponding to those numbers in the accompanying schematic. Some chassis of both models have been assembled with a resistor, Part No. 3088W, which does not include the detector plate section of 70,000 ohms; on other chassis Part No. 3088 is used. A separate resistor of 70,000 ohms value, Part No. Z-129, is mounted at the end of the subbase. In this case, the terminals marked 3 and 4 in the layout must be disregarded. The values of the voltage divider sections of Part No. 3088 are as follows:

1-2	16,500 ohms
2-3	5,500 "
4-5	70,000 "
6-7	375 "
7-8	1,500 "

The values of the sections of Part No. 3088W are the same with the exceptions that section 4-5 is omitted as explained above, and the value of 7-8 is 1,590 ohms. The resistance of the volume control, No. 1, is 10,000 ohms and the value of the three resistors, Nos. 7, 12, and 17, is 100 ohms each.

Sentinel 65B

The "B" battery drain of the early production of Model 65B sets can be reduced by about 20% and a corresponding increase in battery life obtained by adding the 2000-ohm and 4000-ohm resistors as shown in the accompanying partial schematic. It is also necessary to change the connection of the black wire, which is shown going to ground from the tap on the sec-

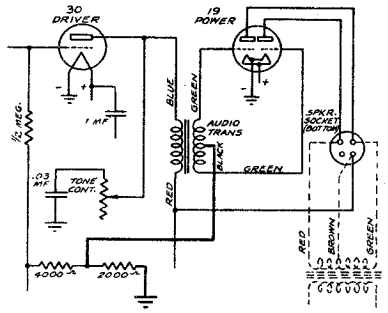

The addition of the two resistors reduce the battery drain in Sentinel Model 65B.

ondary of the output transformer on *page 8-27 in Rider's Volume VIII.* This ground connection is changed to the junction of the two resistors mentioned above. This change puts a 3-volt bias on the 19 tube and reduces the "B" battery drain to 18-20 ma.

This change is incorporated in late production receivers and these will be stamped with the letter "A" on the chassis.

Silvertone 4428A, 4448A, etc.

Due to variations in the 6D8G first detector-oscillator tube, whistles and oscillations may occur at the high-frequency end of the Foreign band. To correct such oscillations, change the value of the oscillator grid leak, R-4, from 50,000 ohms to 25,000 ohms. See schematic on *page 7-61 of Rider's Volume VII.*

Chassis in which this change has already been made in production are rubber-stamped with the letter "D" or some following letter on the chassis identification sticker.

©John F. Rider, Publisher

Philco 38-2

For 25-cycle operation, the following parts must be changed in addition to the power transformer: the 0.25-mf condenser, No. 98 on the schematic on *page 8-55 of Rider's Volume VIII,* is removed and replaced with a 1 mf-0.5 mf, part No. 30-4549. The white wires of this condenser are connected across the choke, No. 99, and the red wire to the junctions of Nos. 59, 60, and 66 (in the plate circuit of the 1st a-f tube). Also remove the 8-mf electrolytic condenser, No. 96, and replace it with a 16-mf electrolytic condenser, Part No. 30-2200.

Beginning with Run No. 2, the i-f circuit has been changed to use permeability-tuned i-f transformers. These changes and the locations of the compensators are shown on the accompanying partial schematic and layout. Note that the schematic numbers of parts differ from those in the schematic on *page 8-55.* The wires from each circuit, however, have been marked indicating the connecting points on the schematic in Rider's Volume VIII.

The compensators are adjusted as follows: The range switch of the receiver is set in the broadcast position; the volume control at maximum; the magnetic tuning switch to "off"; and the tone control in the first position. The signal generator is set at 470 kc.

Using a 0.1-mf condenser as a dummy antenna, connect the signal generator to the grid of the 6A8G detector-oscillator tube and connect the cable ground to the set chassis. Set the attenuator of the signal generator for maximum output and adjust the i-f compensators as follows:

1. Turn compensator 1XB in until the output meter reading decreases almost to zero.

2. Now adjust the compensator 1XA and 1XC for maximum output; then readjust 1XB for maximum output.

3. Turn compensator 2XC in about three turns; then adjust 2XA and 2XB for maximum output. The adjustment procedure for 2XC is the same as that given at the bottom of *page 8-56 in Rider's Volume VIII* headed "Magnetic Tuning Circuit Adjustments."

In Run No. 3, a 250-mmf condenser, Part No. 30-1032, was connected from the screen of the 6U7G to ground to prevent parasitic oscillations.

Beginning with Run No. 4, the 6U7G r-f tube was replaced with a 6K7G to eliminate parasitic oscillations. In addition to the tube change, the green wire connecting the screen contact of the 6U7G and condenser 6 (0.05 mf) was increased in length. This wire should circle around the 6U7G socket towards the front of the r-f unit and then back to condenser No. 6. Place the wire as close to the base as possible.

The 250-mmf condenser that was added in Run No. 3 (see above) was removed in this run.

Philco 38-9, Code 121

In Run No. 2, a 20-ohm resistor was connected in series with the cathode of the 6A8G detector-oscillator tube to provide uniform performance of the oscillator circuit. The next run, this resistor was removed. See schematic on *page 8-65 of Rider's Volume VIII.*

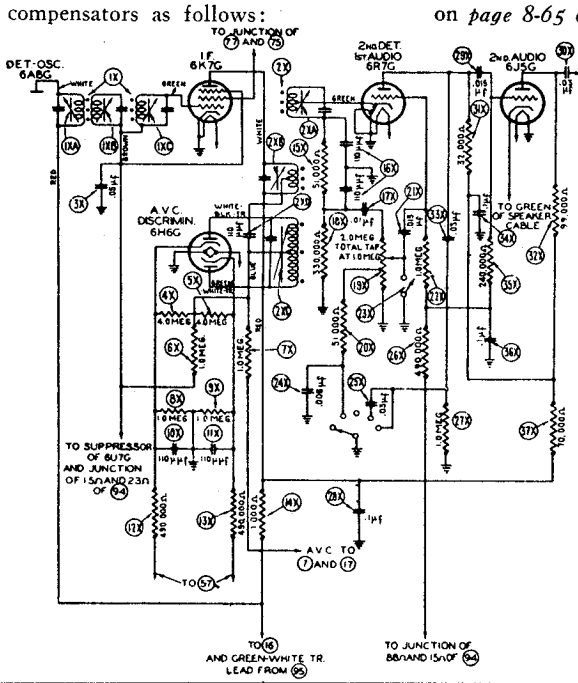

The circuit of the Philco model 38-2 was changed when permeability tuned i-f transformers were substituted for those previously used. Note that the parts numbers in the revised partial schematic at the left, do not correspond with the numbers on the schematic on page 8-55 of Rider's Volume VIII, but that the leads going to the parts of the circuit not shown, employ the original numbering.

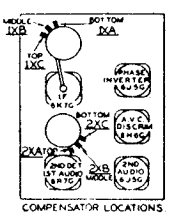

COMPENSATOR LOCATIONS

Stromberg 150L

Complaints have been received now and then about there being too little bass response in this receiver. If more bass is desired, the following changes in the bass control circuit can be made:

Remove the 10,000-ohm resistor, No. 189 in the schematic on *page 8-7, 8 in Rider's Volume VIII,* and replace it with a 47,000-ohm unit, Part No. 26353. Also replace the 0.04-mf condenser, No. 110 in the volume control circuit, with one having a capacity of 0.01 mf, Part No. 25149.

Note that these changes are not essential except when more bass response in this model is requested.

Zenith 5F233, 5F251

Complaints of short B-battery life or poor tone quality in 4- and 5-tube 2-volt receivers can be corrected by eliminating the C battery and converting the circuit to automatic bias and by by-passing the plate voltage in the set with an electrolytic condenser. The partial schematic diagram shown herewith shows where the changes are made in the chassis No. 5522 (used in the models mentioned above) as an example. *See page 8-5 in Rider's Volume VIII.*

Disconnect the negative B-battery yellow lead where it connects to the chassis inside the chassis base. Connect a 300-ohm resistor (¼-watt) in series with this lead to ground. See "A" in schematic. Run the bias lead from the grid of the 1H4G and the grid of the 1J6G to the yellow B lead under the chassis. Disregard the green lead as the C-battery is omitted. See "B" in schematic.

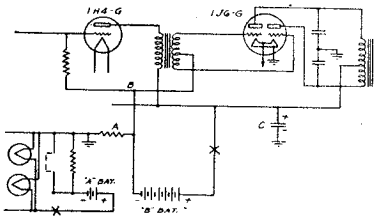

Partial schematic of Zenith 5F233, 5F251

Connect an 8-mf, 150-volt electrolytic condenser from +B to ground after the B circuit switch so that it is not connected across the B batteries when the receiver is turned off. See "C" in schematic.

These changes allow the bias voltage to drop automatically as the B voltage decreases and thereby preserves the tone quality. Originally the bias voltage remained constant when the B voltage dropped. The batteries should be useable down to about 50 volts or a 135-volt drop.

©John F. Rider, Publisher

RCA 85K

This is a console model employing a chassis similar to Model 85T1, the service data for which will be found on *pages 8-112 to 8-114 in Rider's Volume VIII*. These service data apply to Model 85K with the following exceptions.

The loud speaker used is No. 84091-1 and its cable connects to the chassis as follows: Brown lead (L13) to positive (center) terminal of C24; Brown-black lead (L13-T2) to "SG" terminal of the 42 output tube; Black lead (T2) to "P" terminal of the same tube. The resistance values for this speaker are: field coil (L13), 1300 ohms; voice coil (L11), 2.4 ohms; hum neutralizing coil (L12), 0.16 ohm; output transformer (T2) primary, 520 ohms and the secondary, 0.37 ohm. The voice coil impedance is 2.6 ohms at 400 cycles.

The following corrections should be made in the service data and they apply to all models 85T1 and 85K:

The resistance of the antenna coil, L2, should be changed from 0.07 ohm to 1.3 ohms in the large schematic at the top of *page 8-113* and in the small diagram marked "Ant. Coil Connections" on the same page.

In the small schematic marked "Record Player Connections" a shield extension should be shown on the cable and connected to the chassis.

In the voltage diagram on *page 8-114* the voltage from the negative terminal of C24 to chassis should be designated as –17 volts. The voltage from the negative terminal of C10 should be 0 volts instead of –17. The value of C8 has been changed from 450 mmf to 470 mmf. Make this change on both diagrams on *page 8-113*.

Different power transformers (T1) are used in Model 85K. Stock No. 30607 is rated at 105-125/200-250 volts, 50-60 cycles and Stock No. 30571 is rated at 105-125 volts, 25-60 cycles. The complete speaker has a stock number 14613 and the output transformer (T2), 14615.

RCA 6K10, 6T10, 8T10, 9K10

These receivers are similar to models 6K2, 6T2, 8T, and 9K2 respectively, except for cabinet design. The servicing data, as published on the following pages in *Rider's Volume VII*, applies to these new model numbers: 6T10 and 6K10, *page* 7-41; 8T10, *page* 7-56; and 9K10, *page* 7-99.

Bosch 10 (Essex)

It has been brought to our attention that several errors appeared in the schematic of this receiver, which appeared on *page 3-6 of Rider's Volume III and on page 2490 of the Rider Combination Manual*. Please make the following corrections on the schematics on the above-mentioned pages.

The cathode of the 27 second detector should be grounded.

A connection should be indicated at the junction of the leads from R7 and R8. In others words, both of these resistors should be connected to the grid of the 27 A.V.C. tube.

A connection should be indicated at the point where the lead from R5 (in the plate circuit of the 58 first i-f tube) and the lead from the primary of the input pushpull transformer intersects the lead from the junction of R2 and R12 to the primary of the second i-f transformer.

The midpoint of the resistor R18, which is across the power transformer secondary supplying the heaters, should be grounded.

A connection should be indicated at the intersection of the leads from the screens of the 51 first detector and the first i-f tube, a 58.

RCA 6K1, 7X1, 8K1

Model 6K1 is similar to Model 6K (for schematic see *page 7-37 in Rider's Volume VII*) except for the following changes: A 5W4 rectifier is used instead of the 5Z4; R-15 in the heater circuit is omitted; a three-point tone control is used instead of the variable control, R-14; and different power transformers are used.

The tone control is connected as follows: Looking at the control (Part No. 13681) from the rear and starting from counter-clockwise lug, lug No. 1 goes to a 0.017-mf condenser, C-30 (Part No. 11451); the other side of this condenser connects to the chassis. Lug No. 2 goes to the junction of C-20 (0.01 mf) and R-9 (27,000 ohms). The third lug is not used. Lug No. 4 connects directly to the plate contact of the 6F6 output tube.

The d-c resistance of the power transformers are: Part No. 12644 (105-125 volts, 50-60 cycles) primary, 8.6 ohms and secondary 745 ohms; Part No. 12645 (105-125 volts, 25-60 cycles) primary 12.9 ohms and secondary, 1120 ohms; Part No. 12646 (100-130/140-160/195-250 volts, 40-60 cycles) primary, 24.5 ohms and secondary 760 ohms. The voltages for the 5W4 rectifier are: Plate to plate, 692 volts and plate to chassis ground, 346 volts. Other voltages remain the same.

The service data found on *pages 7-37 to 7-40 in Rider's Volume VII* are applicable to Model 6K1.

Model 7X1 is identical to Model 7X (see *page 8-33 in Rider's Volume VIII*) except for cabinet design. Model 8K1 is the same as Model 8K (see *page 7-56 in Rider's Volume VII*) except for cabinet design.

RCA 5M, 6M, 6M2

On the first production of these receivers (*below* serial number 200,000), two types of variable condensers are used. These differ only in the method of mounting the drive gear. Stock Nos. 12221 and 12222 gears are used only with the tuning condenser *not* having a tapped shaft. The gears used with a tapped shaft have the following numbers: 13145 and 13146.

The following parts are in addition to those listed for the above models, which will be found on *pages* 7-13 *and* 7-28 *of Rider's Volume VII*:

13147—Pinion gear and slotted shaft assembly and 13152—on-off operating switch. These are for the control box assemblies.

13006—Tuning and volume control flexible shaft sleeve.

11984—3-contact male connector for reproducer cable, No. 12525.

The second production run of these models (*above* serial number 200,000) used a tuning drive mechanism with a tuning drive ratio of 16 to 1. The following parts are applicable to hese receivers:

13371—3-gang variable tuning condenser.

13372—Tuning condenser shaft drive gear for above.

13373—Tuning condenser worm gear and mounting bracket for above.

13414—Control box complete, less flexible shafts.

Wells-Gardner 5 Tube AC-DC Models

Due to variations in 6J7 tube characteristics, distortion may be encountered at medium or low volume levels. This can be remedied by changing the .5 megohm 2nd detector screen series resistor (R5) to a .7 megohm resistor. This same result, of course, can be obtained by placing an additional .2 megohm resistor in series with the .5 megohm resistor.

Later production models have the .7 megohm resistor.

RCA D 22-1

The 800-8500-ohm resistor, No. 44-45, in the filter circuit of the 5Z3 rectifier, Tube No. 14, has been changed from its original location at the rear of the chassis to the front apron of the chassis near the power transformer. See the chassis wiring diagram on *page 6-137 of Rider's Volume VI*. The electrical connections remain the same.

Chevrolet 601574

The schematic for receivers having serial numbers under 0374000 appears on *United Motor page 6-33 in Rider's Volume VI*. Receivers having serial numbers above 0374000 have the following changes incorporated in the chassis:

Resistor No. 44 in the screen circuit of the 6F7 has been changed from 30,000 to 25,000 ohms.

Condenser No. 29 has been changed from 867 mmf to 950 mmf.

Condensers No. 18C (0.05 mf) and No. 28 (750 mmf) have been eliminated.

Resistor No. 42 in the diode circuit of the 6B7 has been changed from 150,000 to 250,000 ohms.

The volume control, No. 54, has been changed from 0.5 megohm to 1.5 megohms.

The lower end of the primary winding of the second i-f transformer, No. 9, now has a 1000-ohm resistor, No. 48, connected between it and the +B lead. This is located perpendicular to and immediately above resistor No. 42. See the top view of the parts layout on *United Motor page 6-34 in Rider's Volume VI*.

The output tube has been changed from a 41 type to a 42.

Wells-Gardner 6C1

The "B" issue of this series of auto radio receivers has several changes incorporated in it and its data differ from those shown on *pages 8-17 to 8-19 in Rider's Volume VIII*. This issue can be identified by the issue letter which is stamped on the top of the chassis base and on the tube layout label on the chassis case cover. Specify this letter if parts be ordered.

The gang condenser used in the new issue does not have the cut-plate oscillator section. The new part number for the gang condenser is 14A77. A padding condenser (600 kc) was added in series with the oscillator section of this gang condenser and the oscillator coil. The padder is a part of the 2nd i-f trimmer unit and is mounted in the coil can. In other words, the 30-100 mmf condenser, C-14, and the new 900-1300-mmf condenser are mounted in the same can and have a part number 17A79.

The capacity C-15 shown within a dotted circle on the schematic in the 2nd i-f coil assembly, has been changed to an actual part and has a part number 47X57.

The following parts have been changed in the late issue and below will be found the new parts numbers:

T1 Antenna Transformer and Can Assembly 9A859

T2 R-f Transformer and Can Assembly 9A860

T3 Oscillator Coil and Can Assembly 9A862

T5 2nd I-F Transformer and Can Assembly 9A858

The 2000-mmf molded condenser in the plate circuit of the 41 output tube has been changed, to a 0.002-mf, 1000-volt tubular condenser, Part No. 46X-219. A 15-ampere fuse is now used instead of one rated at 20 amperes. The 25-inch volume or tuning control flexible drive shaft has been changed, the Part No. now being 18A49. The changes in this last paragraph apply to all issues of the 6C1 receivers; not just the "B" issue like those above.

RCA 85T1, U-101, U-103

The 450-mmf condenser, C-1, which is connected in the oscillator grid circuit, has been changed to 470 mmf. It is not ordinarily required to replace this in the field, except where trouble might be experienced during re-alignment of the oscillator circuit; in which case tracking will be facilitated if the original unit is replaced with the 470-mmf type, Stock No. 30396. The schematic of model 85T1 will be found on *page 8-113* and that of the other two models on *page 8-147, both being in Rider's Volume VIII*.

United Motors 980393 B-O-P

Please add this note to the data on *United Motors page 8-31 in Rider's Volume VIII*. If the receiver does not oscillate at all or oscillates on one end of the dial only, try a new 36 as an oscillator. If this does not cure the trouble, check resistor R-1-A (the 4200-ohm resistor in the cathode circuit of the 36 detector-oscillator) and condensers C-3 (735 mmf) and C-10 (0.002 mf). As the capacities of these condensers are rather critical, they should be tested by replacement. If these tests do not locate the trouble, it will be necessary to replace the oscillator coil.

Zenith 462

Although several minor changes in the circuit of this automobile receiver were made during production, the schematic on *page 4-3 of Rider's Volume IV* will coincide with most of these sets that have been marketed.

During a portion of the production, the suppressor grids were removed from the cathodes and tied to the grid returns thereby placing the A.V.C. voltage on the suppressor grids. Also a change was made in the first i-f stage, a 6C5 being used instead of a 6D6. This was to eliminate the tendency towards howling.

Zenith 668

Please make a note on *Zenith page 6-1 of Rider's Volume VI* that the chassis of this set and that of Model 666 are the same except for some mechanical parts changes. An 8-inch dynamic speaker (Part No. 49-114) is used instead of the 6-inch speaker in the Model 666. The output transformer is not included in the 8-inch speaker assembly and its part number is 95-285. A speaker cable (Part No. 52-69) is used in the Model 668 that is not used in the Model 666. The part number of the complete speaker assembly is S-3665.

Zenith 15-Tube Receivers

In some of these receivers distortion has developed when using the set at low volume. This has been found due to some r.f. getting through to the a-f system.

The correction is an r-f filter in the a-f grid circuit as shown in the accompanying schematic. This consists of a 150,000-ohm resistor and a 0.0005-mf condenser connected as shown.

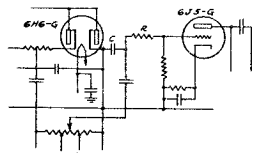

C and R form the r-f filter. For values, see above

Microphonism or a-f tube noise can be corrected by interchanging the 6J5 1st a-f tube or by replacing it with a 6C5G. The latter appears to give slightly less hum and has lower microphonic characteristics.

©John F. Rider, Publisher